Spare parts catalogue

EN
DE

Type:

LR 1300 SX

Serial number:

138281

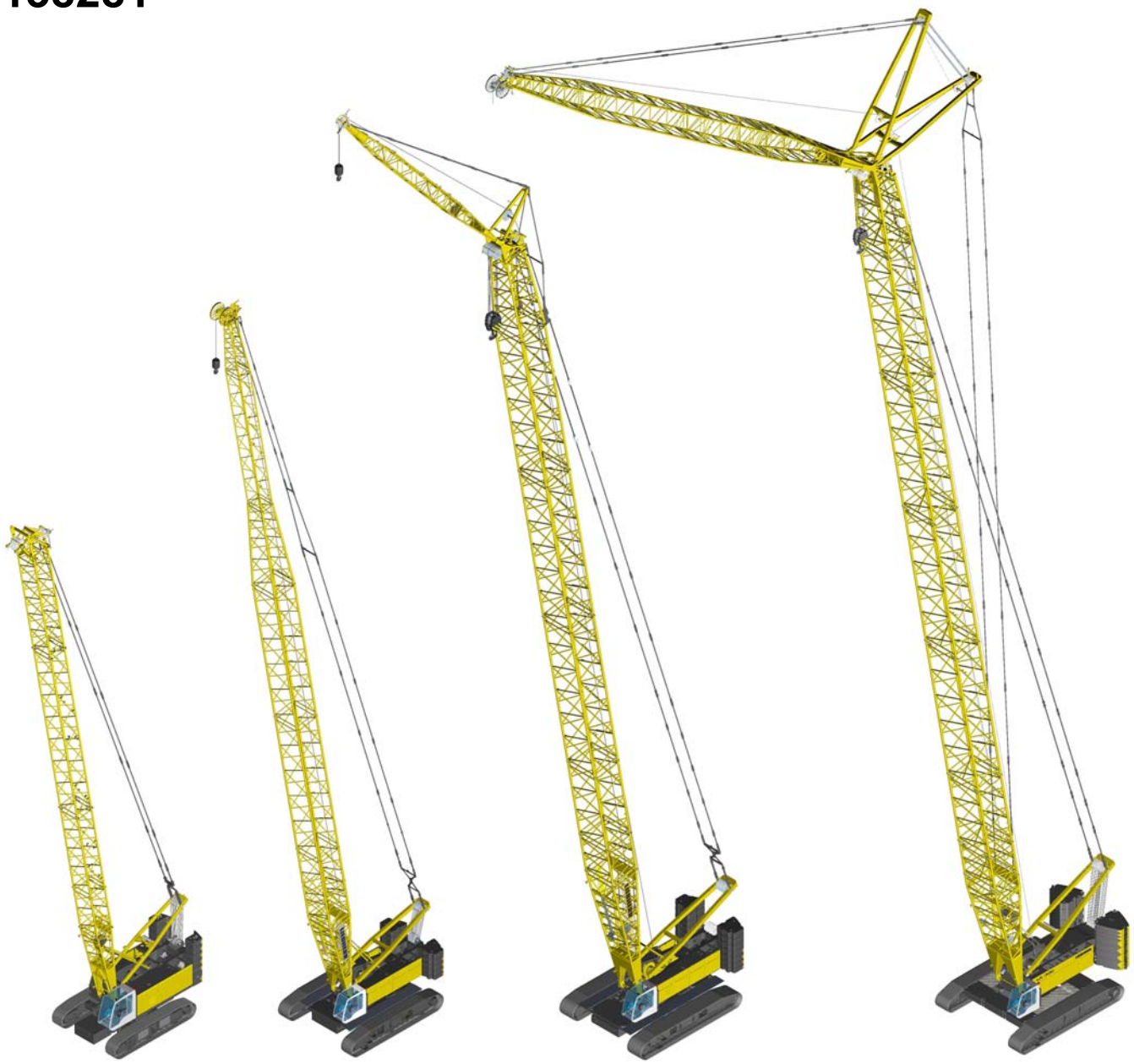

001 - 08.07.2015 / lwnrih0

LIEBHERR

USER GUIDE

Using the spare parts catalogue, it is possible to order spare parts by referencing the item number.

Spare parts catalogue layout

Customer-specific options are listed within the assembly listing in the last positions. Customer-specific options are so-called expansion kits and usually have the abbreviation NRS in the designation.

The assembly listing is located at the beginning of the spare parts catalogue and provides the machine serial number in the item number.

Spare parts sheet layout

1 Position number of the item in the illustration
2 Item number (order number)
3 Quantity
4 Spare part designation (original language)
5 Spare part designation (translation)
6 Specification of a serial number
up to serial number: -0815
from serial number: 0815-
7 Information on the spare part (not used)
8 Note on subordinate items, page number reference

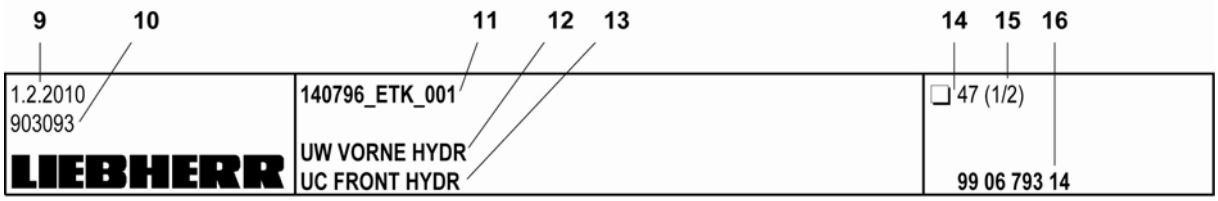

9 Printing date of the spare parts catalogue
10 Illustration number
11 Serial numbers for which this spare parts catalogue applies
12 Assembly designation (original language)
13 Assembly designation (translation)
14 Page number
15 Number of pages per assembly
16 Item number for the assembly
Example: 01 40 796 14 = Item number for the assembly listing

Searching for spare parts:

Searching using the assembly listing:

To find the desired spare part, you must navigate through the part list structure from beginning to end.
In doing so, first use the illustrations in the assembly listing as a guide.
The illustrations in the assembly listing provide a general idea of what is found in the list below the illustration.
Please note that certain assemblies and their spare parts may also be included in the conversion kits in the assembly listing.

Numerical index:

The numerical index is sorted by item number with reference to the page number, assembly, position and quantity.

Alphabetical index:

The alphabetical index is sorted by item designation with reference to item number, position, quantity, page number, assembly and assembly designation in which the item can be found.

Note on ordering

Before ordering, check whether the item number on the machine's type plate matches the number in your spare parts catalogue.

In order for us to be able to process your order quickly and correctly, please provide the following information with your order:

- Machine type and serial number (found on the machine's type plate)
- Item, designation and desired quantity
  For spare parts orders for drive motors, winches, hydraulic pumps, hydraulic motors, valves and cylinders, you must provide the serial number on the component's type plate.
- Delivery address and mode of dispatch

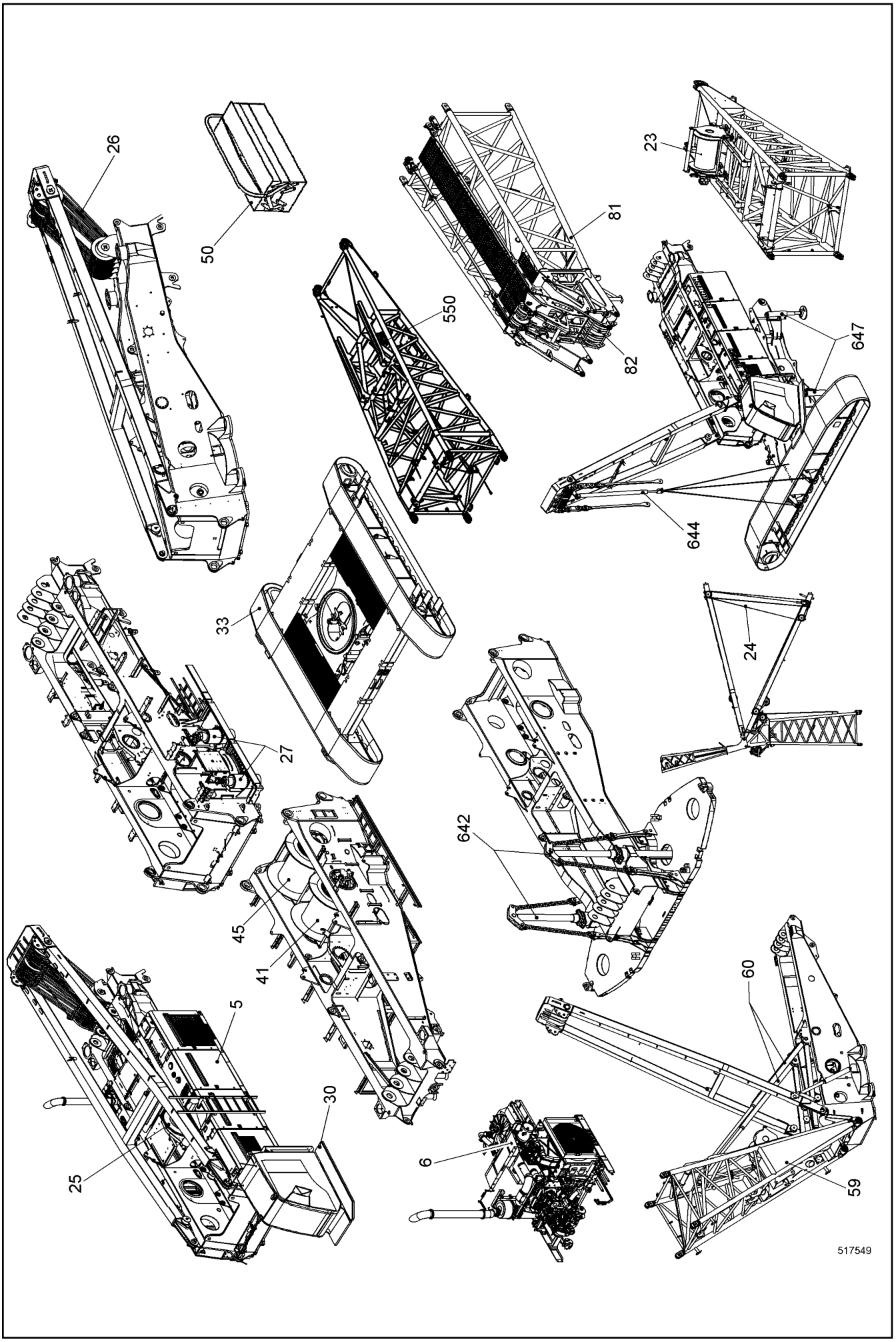

8.7.2015 517549 LIEBHERR	**138281_ETK_001** **LR 1300 SX** **LR 1300 SX**	❑ 1 (1/4) **01 38 281 14**

Pos.	Item	Quantity	Description	Bezeichnung	Serie	K
5	11240479	1	SUPERSTRUCTURE CPL ⇨ ❑ 5	OW KPL		
6	11265606	1	AGGREGATE DIESEL ENGINE ⇨ ❑ 71	AGGREGAT DIESELMOTOR		
8	10351188	2	INSCRIPTION	SCHRIFTZUG		
13	789011714	1	FIRST-AID KIT	VERBANDSKASSETTE		
14	10592569	1	RADIO RFK	RADIO NRS		
15	10511274	1	DOUBLE T-MASTER SWITCH INSTAL. ⇨ ❑ 305	DOPPEL T-MEISTERSCH EINBAU		
18	992338614	1	COUNTERWEIGHT ARRANGEMENT ⇨ ❑ 306	BALLASTGEWICHT ANORD		
23	10519697	1	NEEDLE LUFFING WINCH ⇨ ❑ 310	NADELEINZIEHWINDE		
24	992338714	1	ROPES LUG NEEDLE BOOM ⇨ ❑ 317	BESEILUNG EZW NADEL AL		
25	10519691	1	LUG SUPERSTRUCTURE CPL ⇨ ❑ 318	EZW OW EINBAU KPL		
26	11227037	1	ROPES LUG MAIN BOOM ⇨ ❑ 340	BESEILUNG EZW HAUPT AL		
27	10519682	1	SG SUPERSTRUCTURE ⇨ ❑ 341	DW OW		
30	11293273	1	CABIN CPL ⇨ ❑ 349	KABINE KPL		
31	10519696	1	CONNECTION SUPERSTR UC ⇨ ❑ 387	VERBINDUNG OW UW		
33	11235478	1	UC CPL ⇨ ❑ 389	UW KPL		
37	11248120	1	CENTRAL COUNTERWEIGHT CPL ⇨ ❑ 420	ZENTRALBALLAST KPL		
38	992338914	1	UC PLATFORM ⇨ ❑ 421	UW PODEST		
41	11262605	1	WINCH 1 CRANE ⇨ ❑ 423	WINDE 1 KRAN		
45	11262610	1	WINCH 2 CRANE ⇨ ❑ 438	WINDE 2 KRAN		
50	10561875	1	TOOL EQUIPMENT ⇨ ❑ 443	WERKZEUGAUSRUESTUNG		
52	11218695	1	SIGN LOCATIONS	SCHILDER ANORD		
53	11276851	1	TYPE PLATE	TYPENSCHILD		
55	11892033	1	PAINTING SPECIAL REQUIREMENT	ANSTRICH SONDER		
59	11238203	1	PIVOT PIECE CPL ⇨ ❑ 448	ANLENKSTUECK KPL		
60	11292598	1	TILT-BACK SUPPORT ⇨ ❑ 462	RUECKFALLSTUETZE		
63	11239378	1	A-FRAME 1 ASSEMBLY UNIT ⇨ ❑ 471	A-BOCK 1 MONTAGEEINHEIT		
65	11285947	1	SUPPORT CPL ⇨ ❑ 478	AUFLAGE KPL		
67	11245705	1	INTERMEDIATE PIECE ASSEMB UNIT ⇨ ❑ 481	ZWISCHENSTUECK MONTAGEEI		
69	11286191	1	SUPPORT CPL ⇨ ❑ 496	AUFLAGE KPL		
71	11245711	1	INTERMEDIATE PIECE ASSEMB UNIT ⇨ ❑ 497	ZWISCHENSTUECK MONTAGEEI		
77	11286534	4	SUPPORT CPL ⇨ ❑ 502	AUFLAGE KPL		
79	11245717	4	INTERMEDIATE PIECE ASSEMB UNIT ⇨ ❑ 503	ZWISCHENSTUECK MONTAGEEI		
81	11241324	1	BOOM HEAD CPL ⇨ ❑ 508	AL KOPF KPL		

Pos.	Item	Quantity	Description	Bezeichnung	Serie	K
82	992339814	1	ROLLER SET ⇨ ❑ 520	ROLLENSATZ		
90	11246182	1	NEEDLE ADD-ON PARTS ⇨ ❑ 523	NADELANBAUTEILE		
98	11240849	1	INTERMEDIATE PIECE ASSEMB UNIT ⇨ ❑ 551	ZWISCHENSTUECK MONTAGEEI		
100	11241627	1	INTERMEDIATE PIECE ASSEMB UNIT ⇨ ❑ 558	ZWISCHENSTUECK MONTAGEEI		
104	11241631	4	INTERMEDIATE PIECE ASSEMB UNIT ⇨ ❑ 561	ZWISCHENSTUECK MONTAGEEI		
105	11242636	1	NEEDLE HEAD CPL ⇨ ❑ 563	NADELKOPF KPL		
115	994852114	1	TIP BOOM CPL ⇨ ❑ 576	SPITZEN AL KPL		
116	918907114	1	TIP BOOM MODIFICATION ⇨ ❑ 580	SPITZEN AL UMBAU		
119	993832914	1	TIP BOOM CPL ⇨ ❑ 581	SPITZEN AL KPL		
121	790517114	1	ROPE LEFT	SEIL LI		
122	790517014	1	ROPE LEFT	SEIL LI		
129	790386214	1	LOAD HOOK ⇨ ❑ 584	LASTHAKEN		
133	790411214	1	BOTTOM HOOK BLOCK ⇨ ❑ 585	UNTERFLASCHE		
134	10348635	1	PL LATCH	PL FALLE		
137	790487114	1	BOTTOM HOOK BLOCK ⇨ ❑ 592	UNTERFLASCHE		
138	10501398	2	PL LATCH	PL FALLE		
401	10524422	1	SOFTWARE	SOFTWARE		
438	10511185	1	MODEM RFK ⇨ ❑ 598	MODEM NRS		
447	11250162	1	EMERGENCY OPERATION EL RFK ⇨ ❑ 600	NOTBETRIEB EL NRS		
514	11295514	1	LOW TEMPERATURE PACKAGE RFK ⇨ ❑ 601	KAELTEPAKET NRS		
550	10517439	1	ROPE LUG CPL RFK ⇨ ❑ 605	SEILEINZIEHWINDE KPL NRS		
553	10553721	1	ROOF RAILING RFK ⇨ ❑ 618	DACHGELAENDER NRS		
554	11241478	1	UC PLATFORM ⇨ ❑ 622	UW PODEST		
555	990870614	1	LADDER MOUNTING ⇨ ❑ 59	LEITER EINBAU		
566	11215461	1	WARNING LIGHT RFK ⇨ ❑ 625	HELILEUCHTE NRS		
583	994078814	1	LADDER MOUNTING ⇨ ❑ 630	LEITER EINBAU		
598	919276314	1	HOOK 2 RFK ⇨ ❑ 631	HAKENBETRIEB 2 NRS		
600	10511769	1	NEEDLE BOOM CPL ⇨ ❑ 632	ZWISCHENHUB NADEL AL KPL		
605	991011614	1	ROPE GUIDE ⇨ ❑ 636	SEILFUEHRUNG		
616	992340514	1	INTERMEDIATE TENSIONING RFK ⇨ ❑ 639	ZWISCHENABSPANNUNG NRS		
617	992342014	1	INTERMEDIATE TENSIONING RFK ⇨ ❑ 641	ZWISCHENABSPANNUNG NRS		
619	970599703	1	INTERMEDIATE TENSIONING RFK ⇨ ❑ 643	ZWISCHENABSPANNUNG NRS		

Pos.	Item	Quantity	Description	Bezeichnung	Serie	K
642	10519713	1	SELF-LOADING SYSTEM RFK ⇨ ❑ 644	SELBSTVERLADESYSTEM NRS		
644	11236197	1	SELF-LOADING SYSTEM RFK ⇨ ❑ 649	SELBSTVERLADESYSTEM NRS		
647	11242988	1	SELF-LOADING SYSTEM RFK ⇨ ❑ 659	SELBSTVERLADESYSTEM NRS		
650	10536350	1	SYNCHRONIZING HYDR RFK ⇨ ❑ 672	GLEICHLAUF HYDR NRS		
651	971460103	1	WINCH SYNCHRONIZATION EL RFK	WINDENGLEICHLAUF EL NRS		
680	11236266	2	ROPE MOUNTING RFK ⇨ ❑ 676	SEILHALTERUNG NRS		
702	11219907	1	VIDEO MONITORING SYSTEM RFK ⇨ ❑ 678	VIDEOUEBERWACHUNGSANLAG		
704	11894008	1	VIDEO MONITORING SYSTEM RFK ⇨ ❑ 682	VIDEOUEBERWACHUNGSANLAG		
719	10517280	1	CABIN INCLINATION RFK ⇨ ❑ 688	KABINENNEIGUNG NRS		
721	992197314	1	DRIVER'S SEAT RFK ⇨ ❑ 691	FAHRERSITZ NRS		
723	11220372	1	FOOT PEDAL EL INSTALLATION ⇨ ❑ 698	FUSSPEDAL EL EINBAU		
724	11231891	1	AIR CONDITIONING UNIT RFK ⇨ ❑ 699	KLIMAANLAGE NRS		
821	11284236	1	CENTRAL LUBRICATION RFK ⇨ ❑ 704	ZENTRALSCHMIERUNG NRS		
828	10522930	1	SG TACHOGENERATOR RFK ⇨ ❑ 706	DW GEBER NRS		
829	10529523	1	AREA LIMITATION CPL RFK	BEREICHSBEGRENZUNG KPL NR		
843	10560137	1	MAINS SUPPLY BATTERY ⇨ ❑ 708	FREMDEINSPEISUNG BATTERIE		
858	10521554	1	REFUELLING SYSTEM RFK ⇨ ❑ 709	BETANKUNGSANLAGE NRS		
992	981953714	1	SOUND REDUCTION	SCHALLABNAHME		
999	981809914	1	KEY	SCHLUESSEL		

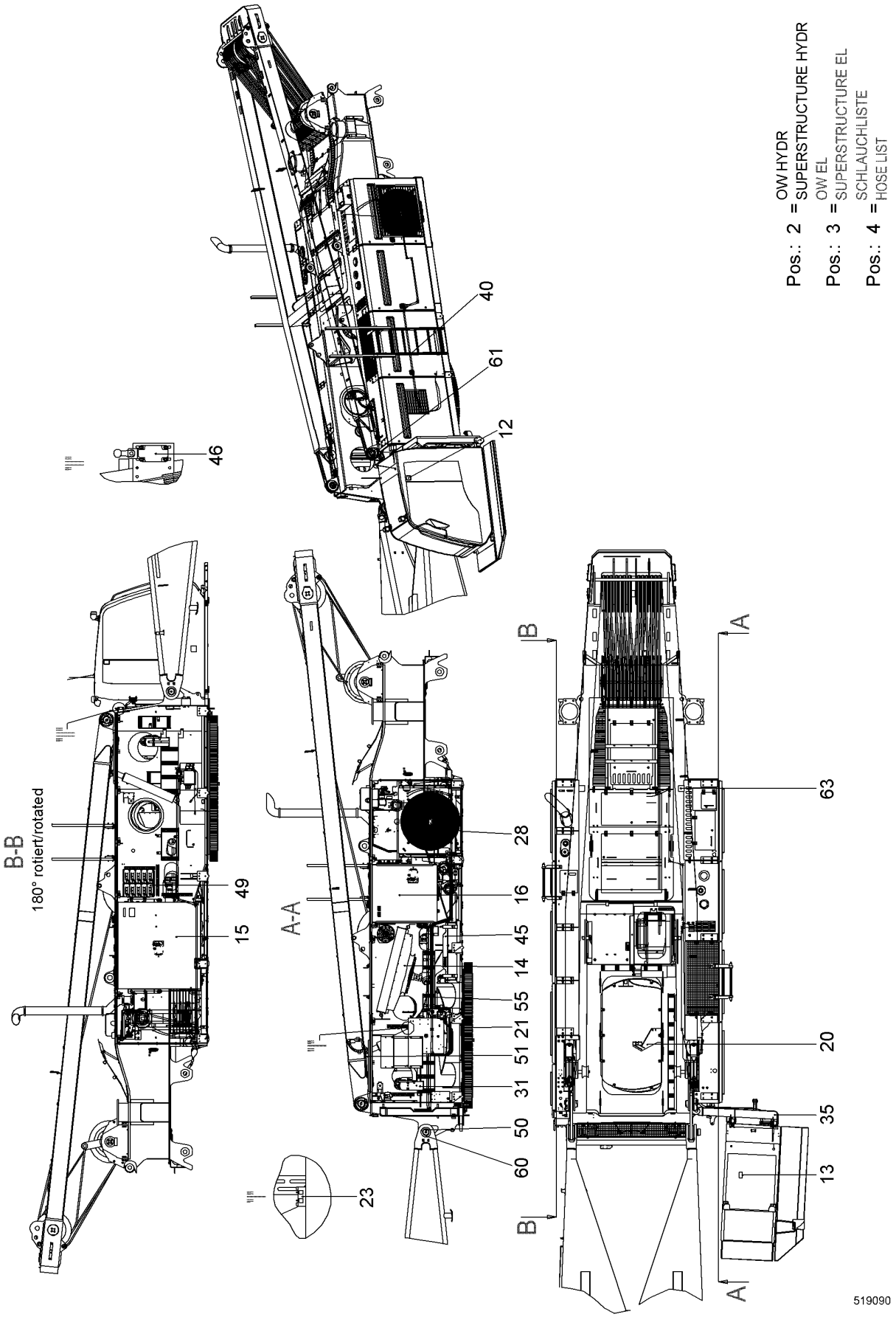
Pos.: 2 = OW HYDR
SUPERSTRUCTURE HYDR
Pos.: 3 = OW EL
SUPERSTRUCTURE EL
Pos.: 4 = SCHLAUCHLISTE
HOSE LIST
B-B
180° rotiert/rotated
A-A
B
A
40
61
12
46
49
15
28
16
45
14
55
21
51
31
50
60
23
63
20
35
13
519090

Pos.	Item	Quantity	Description	Bezeichnung	Serie	K
2	11296186	1	SUPERSTRUCTURE HYDR ⇨ ❑ 7	OW HYDR		
3	11245190	1	SUPERSTRUCTURE EL ⇨ ❑ 28	OW EL		
4	11269954	1	HOSE LIST ⇨ ❑ 36	SCHLAUCHLISTE		
12	9874345	1	STICKER SOUND VOLUME LEVEL	AUFKLEBER SCHALLEISTUNGS		
13	991462714	1	HOT-WATER HEATING SUPERSTR. ⇨ ❑ 39	WARMWASSERHEIZUNG OW		
14	10519616	1	OIL COOLER INSTALLATION ⇨ ❑ 41	OELKUEHLER EINBAU		
15	10560700	1	TANK INSTALLATION HYDR ⇨ ❑ 42	TANK HYDR EINBAU		
16	10560732	1	FUEL TANK ASSY. ⇨ ❑ 47	KRAFTSTOFFTANK EINBAU		
20	10552681	1	DRIVER INSTALLATION ⇨ ❑ 49	MITNEHMER EINBAU		
21	10519631	1	SUPERSTR. SLEWING RING INSTAL. ⇨ ❑ 51	OW DREHVERBINDUNG EINBAU		
23	11273155	1	CENTRAL GREASING ⇨ ❑ 52	ZENTRALSCHMIERUNG		
31	10578845	2	FIRE EXTINGUISHER MOUNTING ⇨ ❑ 54	FEUERLOESCHER EINBAU		
35	10581634	1	CABIN SUSPENSION CPL ⇨ ❑ 57	KABINENAUFHAENGUNG KPL		
40	990870614	1	LADDER MOUNTING ⇨ ❑ 59	LEITER EINBAU		
45	10560673	1	BATTERY INSTALLATION CPL ⇨ ❑ 60	BATTERIE EINBAU KPL		
46	11310932	1	LIMIT SWITCH INSTALLATION ⇨ ❑ 61	ENDSCHALTER EINBAU		
49	10560694	1	MODULES INSTALLATION ⇨ ❑ 62	MODULE EINBAU		
50	992345114	1	PIVOT BOLT INSTALLATION ⇨ ❑ 63	ANLENKBOLZEN EINBAU		
51	10519694	1	A-FRAME ERECTION CYL INSTAL. ⇨ ❑ 64	A-BOCK AUFRICHTZYL EINBAU		
60	954398703	2	BUSHING 120/150X88 E470;EN 10294-1	BUCHSE		
61	970588503	2	BUSHING 115/135X56 E470;EN 10294-1	BUCHSE		
63	991606114	1	SUPPORT CPL ⇨ ❑ 70	AUFLAGE KPL		

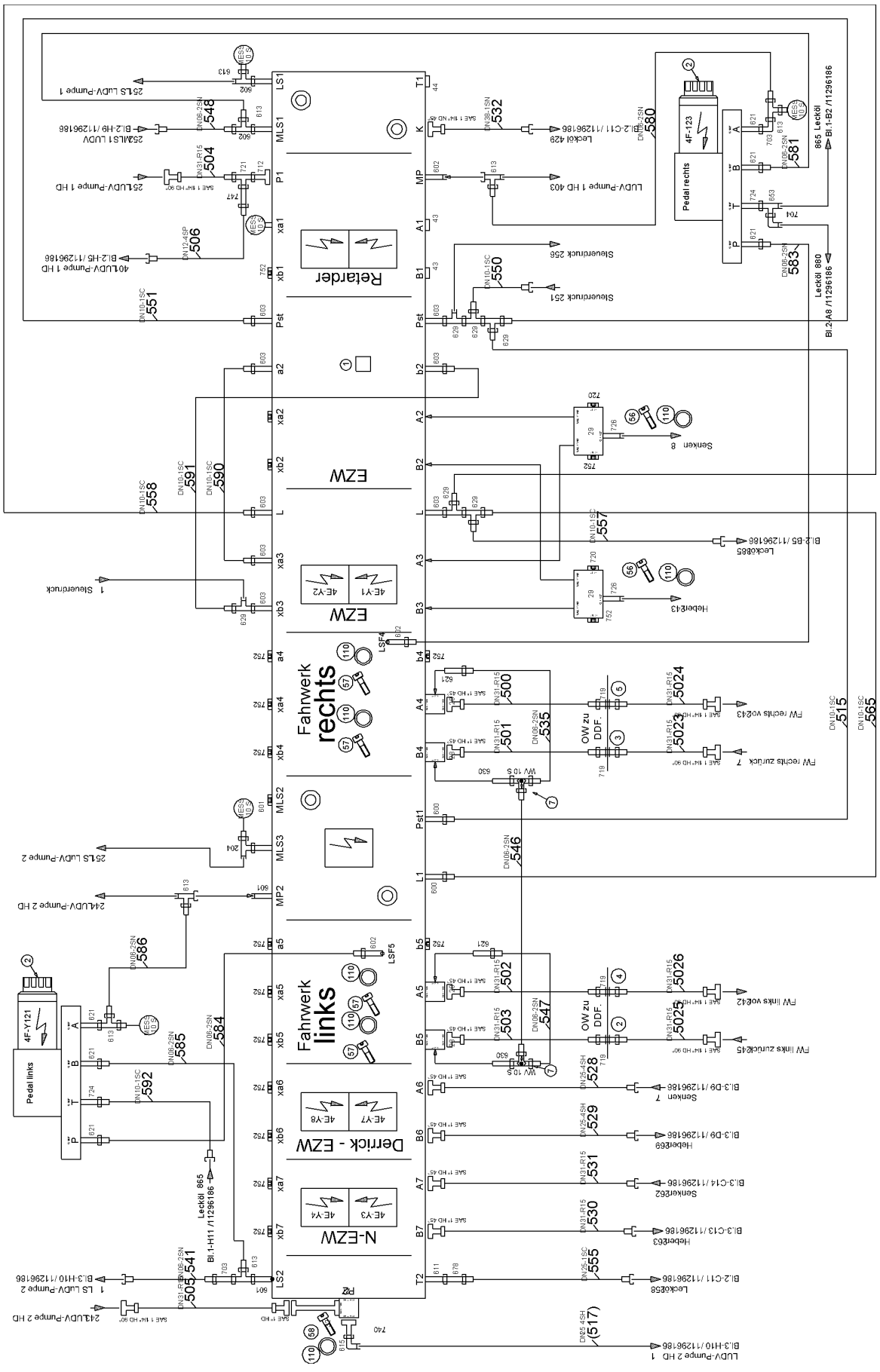
Retarder
EZW
EZW
Fahrwerk rechts
Fahrwerk links
Derrick - EZW
N-EZW
Pedal rechts
Pedal links
OW zu DDF.
OW zu DDF.
519798

Pos.	Item	Quantity	Description	Bezeichnung	Serie	K
1	11286476	1	VALVE BLOCK	VENTILBLOCK		
2	11286481	2	DIRECTIONAL CONTROL VALVE	WEGEVENTIL		
3	10351486	1	VALVE BLOCK ⇨ ❑ 17	VENTILBLOCK		
4	592145814	1	VALVE BLOCK ⇨ ❑ 21	VENTILBLOCK		
6	10541514	1	VALVE BLOCK SINGLE DISK	VENTILBLOCKEINZELSCHEIBE		
7	511491914	2	SHUTTLE VALVE	WECHSELVENTIL		
8	511704214	1	QUICK-FITTING THREAD COUPLING ⇨ ❑ 22	SCHNELLVERSCHRAUBUNGSK		
9	946293614	1	RESTRICTOR BODY	DROSSELKOERPER		
10	513313914	2	DOUBLE-ACTING CYL ⇨ ❑ 23	DOPPELWIRKZYL		
11	511432714	5	DIRECTIONAL CONTROL VALVE	WEGEVENTIL		
12	510662614	2	CONNECTING PLATE	ANSCHLUSSPLATTE		
13	511657614	1	THERMOREGULATOR	TEMP REGLER		
14	510572214	2	QUICK-FITTING THREAD COUPLING	SCHNELLVERSCHRAUBUNGSK		
15	510571914	1	QUICK-FITTING THREAD COUPLING ⇨ ❑ 24	SCHNELLVERSCHRAUBUNGSK		
16	511708414	1	QUICK-FITTING THREAD COUPLING	SCHNELLVERSCHRAUBUNGSK		
17	511511314	1	QUICK-FITTING THREAD COUPLING	SCHNELLVERSCHRAUBUNGSK		
18	511511214	1	QUICK-FITTING THREAD COUPLING	SCHNELLVERSCHRAUBUNGSK		
19	10445105	1	QUICK RELEASE FITTING ⇨ ❑ 25	SCHNELLVERSCHLUSSKUPPLUN		
20	511495814	1	INTERMEDIATE PLATE	ZWISCHENPLATTE		
21	10225925	1	COOLER MOTOR ⇨ ❑ 26	KUEHLER MOTOR		
23	510662914	3	CONNECTING PLATE	ANSCHLUSSPLATTE		
26	991487414	1	RESTRICTOR BODY	DROSSELKOERPER		
28	956274314	4	FLANGE	FLANSCH		
30	943958914	1	BLOCK	BLOCK		
31	511607214	1	NON-RETURN VALVE	RUECKSCHLAGVENTIL		
32	790227714	1	CONNECTING FLANGE SAE	FLANSCHVERBINDUNG SAE		
33	592044714	1	NON-RETURN VALVE	RUECKSCHLAGVENTIL		
35	10548543	1	LID CPL	DECKEL KPL		
37	991867414	1	RESTRICTOR BODY	DROSSELKOERPER		
38	714001914	2	MAIN JET SOLEX 0.8MM	HAUPTDUESE SOLEX		
39	510682014	1	BALL VALVE	KUGELHAHN		
40	969329314	1	WELD PLATE	ANSCHWEISSPLATTE		

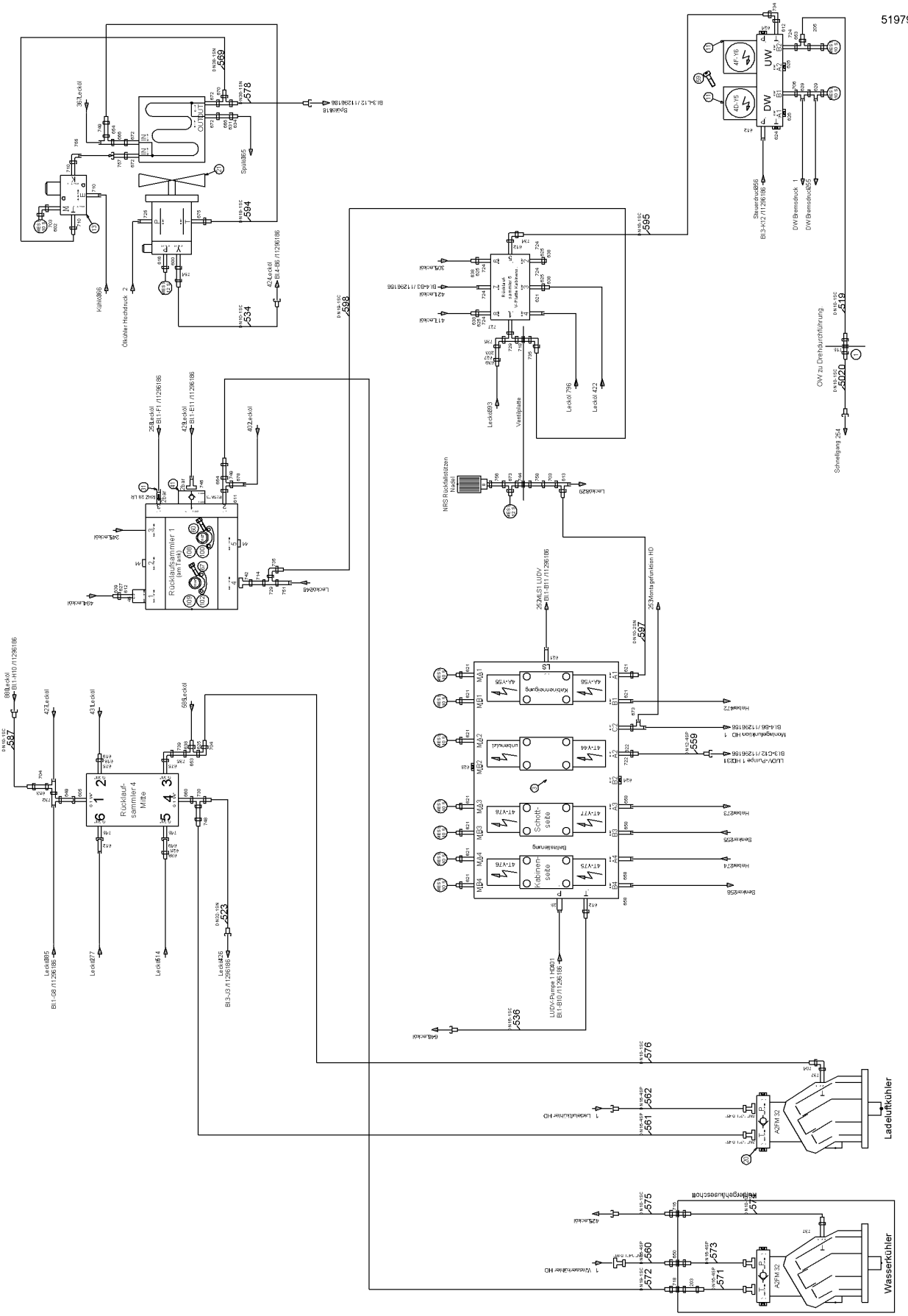
Rücklaufsammler 1
Rücklauf-sammler 4 Mitte
Schalt-seite
Kabinen-seite
Ladeluftkühler
Wasserkühler
Ventilplatte
Lackö422
Lackö796
Lackö893
Lackö828
Lackö848
Lackö414
Lackö877
Lackö895
Lackö826
Lackö536
Lackö534
Lackö578
Lackö594
Lackö595
Lackö598
Lackö599
Lackö619
Lackö5020
Lackö587
Lackö588
Lackö589
Lackö523
Lackö559
Lackö560
Lackö561
Lackö562
Lackö571
Lackö572
Lackö573
Lackö575
Lackö576
Lackö669
Lackö671
Lackö672
Lackö673
Lackö674
Lackö675
Lackö676
Lackö677
Lackö678
Lackö679
Lackö680
Lackö681
Lackö682
Lackö683
Lackö684
Lackö685
Lackö686
Lackö687
Lackö688
Lackö689
Lackö690
Lackö691
Lackö692
Lackö693
Lackö694
Lackö695
Lackö696
Lackö697
Lackö698
Lackö699
Lackö700
Lackö701
Lackö702
Lackö703
Lackö704
Lackö705
Lackö706
Lackö707
Lackö708
Lackö709
Lackö710

Pos.	Item	Quantity	Description	Bezeichnung	Serie	K
41	511631514	1	NON-RETURN VALVE	RUECKSCHLAGVENTIL		
42	944672614	1	CLOSING FLANGE	VERSCHLUSSFLANSCH		
43	510705314	2	SEALING FLANGE SAE	VERSCHLUSSFLANSCH SAE		
44	510710814	4	SEALING FLANGE SAE	VERSCHLUSSFLANSCH SAE		
45	949341514	1	CLOSING FLANGE	VERSCHLUSSFLANSCH		
55	4001246	16	HEX SCREW ISO 4017 M10X35 10.9	SECHSKANTSCHRAUBE		
56	406606414	16	HEX SCREW ISO 4017 M12X65 10.9	SECHSKANTSCHRAUBE		
57	4600505	16	SOCKET HEAD SCREW ISO 4762 M12X70 10.9	ZYLINDERSCHRAUBE		
58	404313401	4	SOCKET HEAD SCREW ISO 4762 M12X140 10.	ZYLINDERSCHRAUBE		
59	4600552	20	SOCKET HEAD SCREW ISO 4762 M5X50 10.9	ZYLINDERSCHRAUBE		
60	460023503	8	HEX SCREW ISO 4014 M12X80 10.9	SECHSKANTSCHRAUBE		
61	4600366	36	HEX SCREW ISO 4017 M12X40 10.9	SECHSKANTSCHRAUBE		
62	10539300	24	HEX SCREW ISO 4017 M14X45 10.9	SECHSKANTSCHRAUBE		
64	4062002	16	HEX SCREW ISO 4017 M8X30 10.9	SECHSKANTSCHRAUBE		
65	4066122	8	HEX SCREW ISO 4017 M12X35 10.9	SECHSKANTSCHRAUBE		
67	4066098	48	HEX SCREW ISO 4017 M10X30 10.9	SECHSKANTSCHRAUBE		
100	510574414	8	FLANGE HALF	FLANSCHHAELFTE		
101	510587514	8	FLANGE HALF	FLANSCHHAELFTE		
102	511502414	24	FLANGE HALF	FLANSCHHAELFTE		
103	510586614	12	FLANGE HALF	FLANSCHHAELFTE		
104	510586914	18	FLANGE HALF	FLANSCHHAELFTE		
105	510548714	8	FLANGE HALF	FLANSCHHAELFTE		
106	10490784	4	PLAIN COMPRESSION RING	RECHTECKRING		
107	10490785	4	PLAIN COMPRESSION RING	RECHTECKRING		
108	10490787	5	PLAIN COMPRESSION RING	RECHTECKRING		
109	10472425	18	PLAIN COMPRESSION RING	RECHTECKRING		
110	10490781	19	PLAIN COMPRESSION RING	RECHTECKRING		

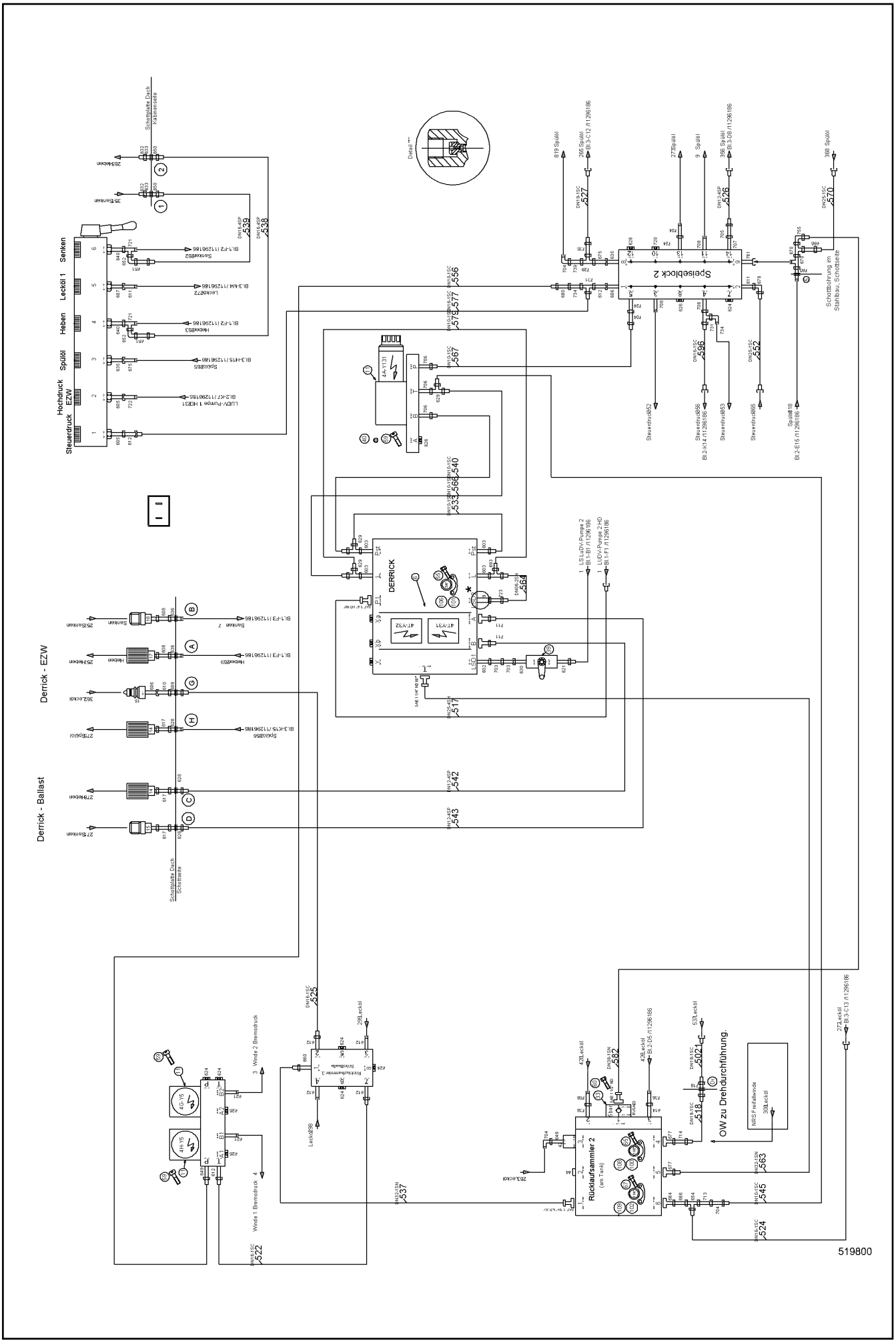

8.7.2015 519800 LIEBHERR	**138281_ETK_001** **SUPERSTRUCTURE HYDR** **OW HYDR**	❑ 11 (5/10) **11 29 618 6**

Pos.	Item	Quantity	Description	Bezeichnung	Serie	K
200	510664814	2	GAUGE CONNECTION	MESSSTUTZEN		
201	7409720	1	GAUGE CONNECTION	MESSSTUTZEN		
202	510694514	19	GAUGE CONNECTION	MESSSTUTZEN		
203	247041102	1	FLANGE JOINT	VERSCHRAUBUNG		
204	482431314	1	FLANGE JOINT	VERSCHRAUBUNG		
205	485431414	1	FLANGE JOINT	VERSCHRAUBUNG		
600	471030508	3	FLANGE JOINT	VERSCHRAUBUNG		
601	471008214	3	FLANGE JOINT	VERSCHRAUBUNG		
602	471004514	11	FLANGE JOINT	VERSCHRAUBUNG		
603	471030608	12	FLANGE JOINT	VERSCHRAUBUNG		
605	247116402	3	FLANGE JOINT	VERSCHRAUBUNG		
606	247043102	2	FLANGE JOINT	VERSCHRAUBUNG		
607	247042702	1	FLANGE JOINT	VERSCHRAUBUNG		
608	471100414	2	FLANGE JOINT	VERSCHRAUBUNG		
609	247027202	1	FLANGE JOINT	VERSCHRAUBUNG		
610	247011602	1	FLANGE JOINT	VERSCHRAUBUNG		
611	247010102	4	FLANGE JOINT	VERSCHRAUBUNG		
612	247009702	13	FLANGE JOINT	VERSCHRAUBUNG		
613	7367776	12	FLANGE JOINT	VERSCHRAUBUNG		
614	790453814	1	FLANGE JOINT	VERSCHRAUBUNG		
615	482531614	1	FLANGE JOINT	VERSCHRAUBUNG		
616	471032908	1	FLANGE JOINT	VERSCHRAUBUNG		
617	471100114	3	FLANGE JOINT	VERSCHRAUBUNG		
618	247049002	1	FLANGE JOINT	VERSCHRAUBUNG		
619	477700214	1	FLANGE JOINT	VERSCHRAUBUNG		
620	474002314	4	FLANGE JOINT	VERSCHRAUBUNG		
621	471032808	27	FLANGE JOINT	VERSCHRAUBUNG		
622	471032608	1	FLANGE JOINT	VERSCHRAUBUNG		
624	247112702	9	FLANGE JOINT	VERSCHRAUBUNG		
625	247048802	6	FLANGE JOINT	VERSCHRAUBUNG		
626	247128402	8	FLANGE JOINT	VERSCHRAUBUNG		
627	247049102	2	FLANGE JOINT	VERSCHRAUBUNG		
628	474032614	3	FLANGE JOINT	VERSCHRAUBUNG		
629	247242302	11	FLANGE JOINT	VERSCHRAUBUNG		
630	481930414	3	FLANGE JOINT	VERSCHRAUBUNG		

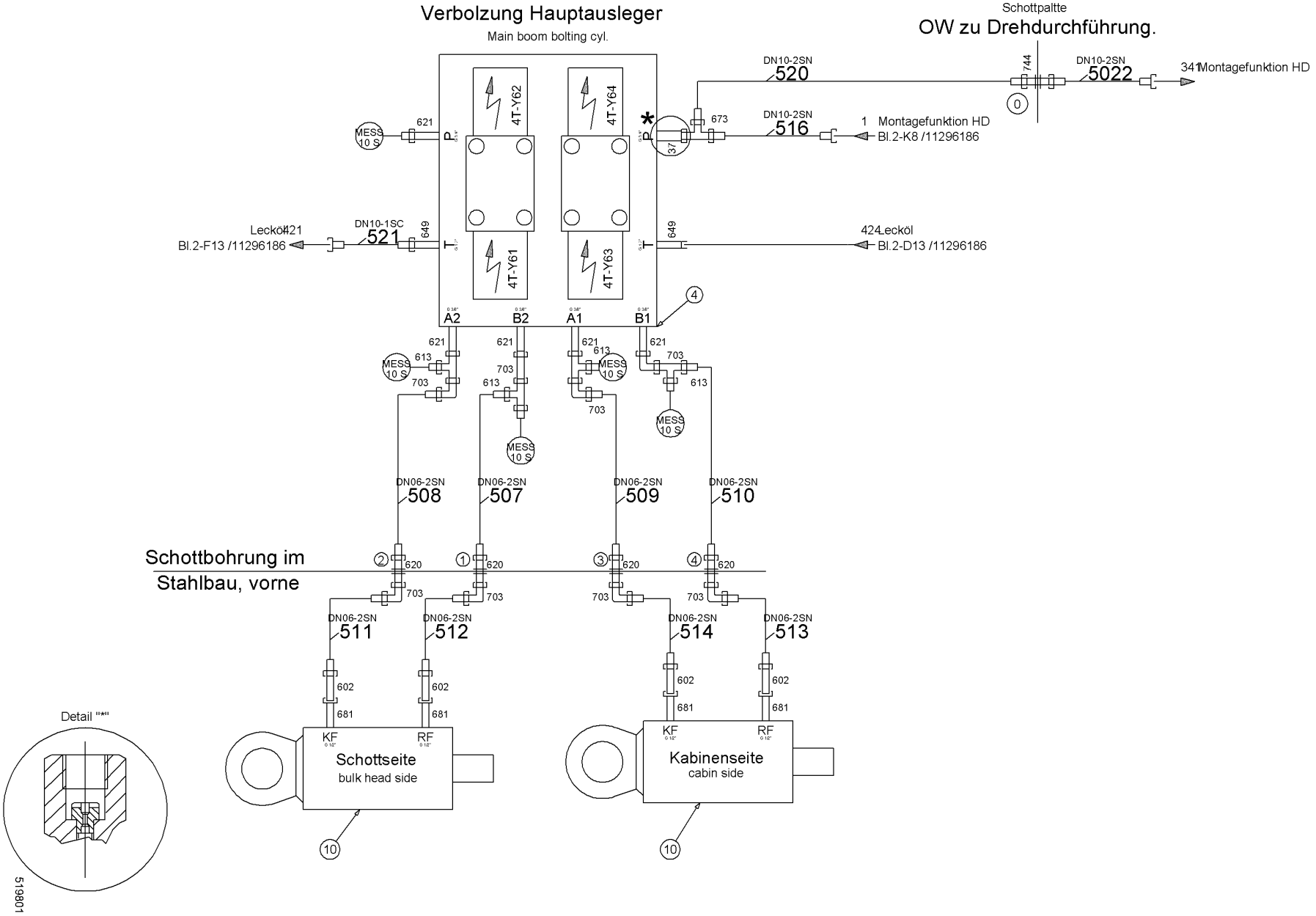
Verbolzung Hauptausleger
Main boom bolting cyl.
Schottpaltte
OW zu Drehdurchführung.
DN10-2SN
520
DN10-2SN
5022
341 Montagefunktion HD
744
0
DN10-2SN
516
1 Montagefunktion HD
Bl.2-K8 /11296186
673
621
MESS
10 S
4T-Y62
4T-Y64
4T-Y61
4T-Y63
37
649
DN10-1SC
521
Lecköl 421
Bl.2-F13 /11296186
424 Lecköl
Bl.2-D13 /11296186
A2
B2
A1
B1
4
613
703
DN06-2SN
508
DN06-2SN
507
DN06-2SN
509
DN06-2SN
510
Schottbohrung im
Stahlbau, vorne
620
602
681
DN06-2SN
511
DN06-2SN
512
DN06-2SN
514
DN06-2SN
513
KF
RF
Schottseite
bulk head side
Kabinenseite
cabin side
10
Detail "*"
519801

Pos.	Item	Quantity	Description	Bezeichnung	Serie	K
631	247049202	1	FLANGE JOINT	VERSCHRAUBUNG		
632	477701414	2	FLANGE JOINT	VERSCHRAUBUNG		
633	477400714	2	FLANGE JOINT	VERSCHRAUBUNG		
634	477700814	1	FLANGE JOINT	VERSCHRAUBUNG		
635	475501414	2	FLANGE JOINT	VERSCHRAUBUNG		
636	474032914	2	FLANGE JOINT	VERSCHRAUBUNG		
638	477700514	6	FLANGE JOINT	VERSCHRAUBUNG		
639	477700114	2	FLANGE JOINT	VERSCHRAUBUNG		
640	7410455	2	FLANGE JOINT	VERSCHRAUBUNG		
649	247009202	6	FLANGE JOINT	VERSCHRAUBUNG		
650	474032714	2	FLANGE JOINT	VERSCHRAUBUNG		
651	485435014	2	FLANGE JOINT	VERSCHRAUBUNG		
652	482531814	2	FLANGE JOINT	VERSCHRAUBUNG		
653	247128602	4	FLANGE JOINT	VERSCHRAUBUNG		
654	247020902	3	FLANGE JOINT	VERSCHRAUBUNG		
658	471032708	4	FLANGE JOINT	VERSCHRAUBUNG		
660	247232702	2	FLANGE JOINT	VERSCHRAUBUNG		
664	510704614	1	FLANGE JOINT	VERSCHRAUBUNG		
666	485431314	4	FLANGE JOINT	VERSCHRAUBUNG		
670	7367986	3	FLANGE JOINT	VERSCHRAUBUNG		
672	471034708	4	FLANGE JOINT	VERSCHRAUBUNG		
673	7617461	3	FLANGE JOINT	VERSCHRAUBUNG		
675	247009902	5	FLANGE JOINT	VERSCHRAUBUNG		
677	510701314	2	FLANGE JOINT	VERSCHRAUBUNG		
678	7617494	2	FLANGE JOINT	VERSCHRAUBUNG		
680	247040302	1	FLANGE JOINT	VERSCHRAUBUNG		
681	247042402	4	FLANGE JOINT	VERSCHRAUBUNG		
693	482430314	1	FLANGE JOINT	VERSCHRAUBUNG		
703	7617268	13	FLANGE JOINT	VERSCHRAUBUNG		
704	247117702	9	FLANGE JOINT	VERSCHRAUBUNG		
705	7617460	1	FLANGE JOINT	VERSCHRAUBUNG		
706	471007014	4	FLANGE JOINT	VERSCHRAUBUNG		
707	471033114	1	FLANGE JOINT	VERSCHRAUBUNG		
708	247261802	3	FLANGE JOINT	VERSCHRAUBUNG		
710	10225291	3	FLANGE JOINT	VERSCHRAUBUNG		
711	510701914	2	FLANGE JOINT	VERSCHRAUBUNG		
712	510702414	1	FLANGE JOINT	VERSCHRAUBUNG		
713	485435714	1	FLANGE JOINT	VERSCHRAUBUNG		
714	485431214	2	FLANGE JOINT	VERSCHRAUBUNG		
716	247027002	1	FLANGE JOINT	VERSCHRAUBUNG		
718	247027302	2	FLANGE JOINT	VERSCHRAUBUNG		
719	474033014	4	FLANGE JOINT	VERSCHRAUBUNG		
720	477704614	3	FLANGE JOINT	VERSCHRAUBUNG		

LUDV-Block Übersicht

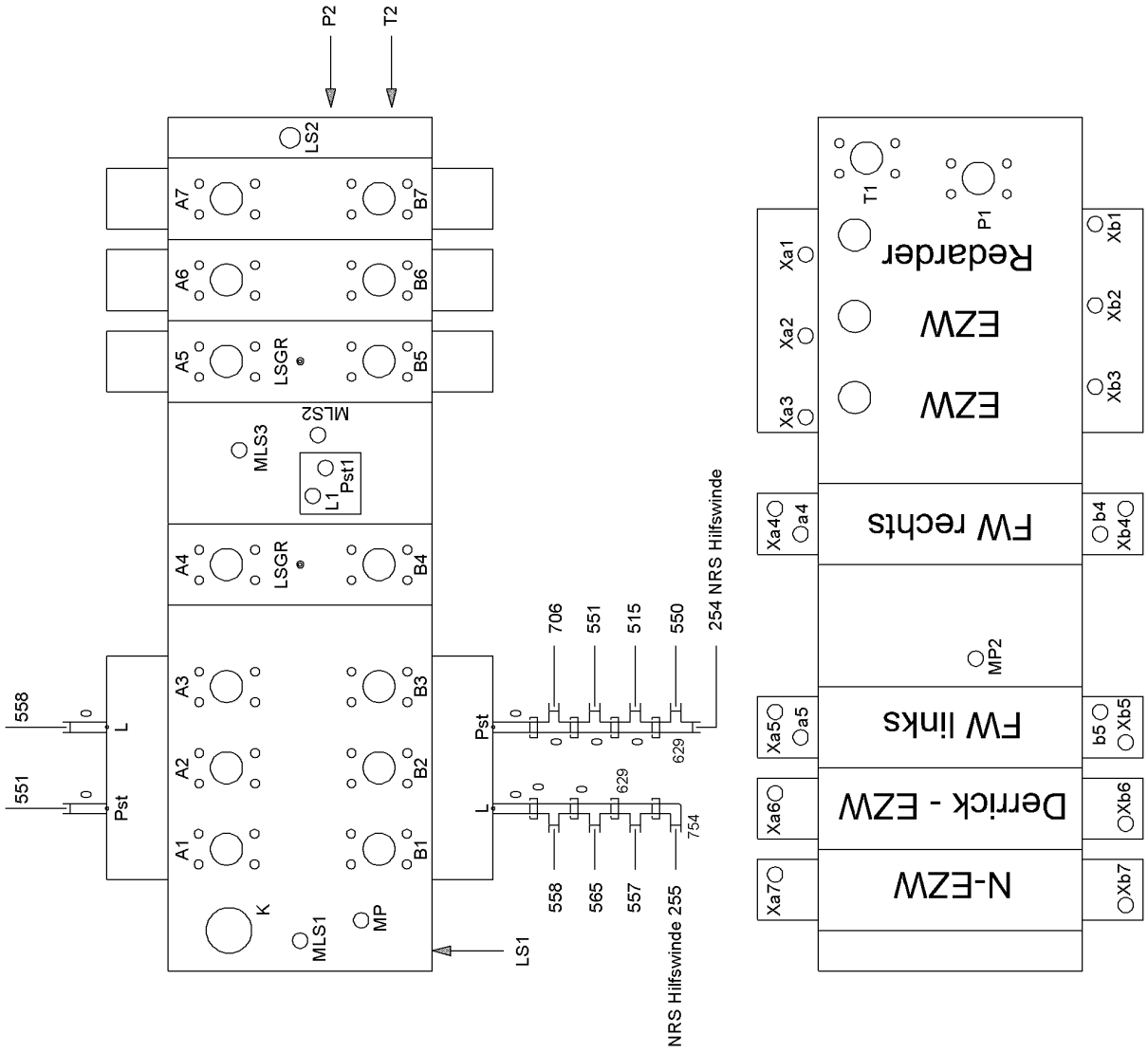

Pos.	Item	Quantity	Description	Bezeichnung	Serie	K
721	482331914	3	FLANGE JOINT	VERSCHRAUBUNG		
722	471033214	2	FLANGE JOINT	VERSCHRAUBUNG		
723	472531508	1	FLANGE JOINT	VERSCHRAUBUNG		
724	247009402	10	FLANGE JOINT	VERSCHRAUBUNG		
725	471033414	1	FLANGE JOINT	VERSCHRAUBUNG		
726	471034414	2	FLANGE JOINT	VERSCHRAUBUNG		
727	247121102	1	FLANGE JOINT	VERSCHRAUBUNG		
729	247138602	3	FLANGE JOINT	VERSCHRAUBUNG		
730	482330814	1	FLANGE JOINT	VERSCHRAUBUNG		
731	247128502	2	FLANGE JOINT	VERSCHRAUBUNG		
732	247105602	1	FLANGE JOINT	VERSCHRAUBUNG		
734	247108302	4	FLANGE JOINT	VERSCHRAUBUNG		
735	247126202	5	FLANGE JOINT	VERSCHRAUBUNG		
736	482530914	1	FLANGE JOINT	VERSCHRAUBUNG		
737	471030708	1	FLANGE JOINT	VERSCHRAUBUNG		
738	471033614	1	FLANGE JOINT	VERSCHRAUBUNG		
739	247040902	2	FLANGE JOINT	VERSCHRAUBUNG		
740	510703914	1	FLANGE JOINT	VERSCHRAUBUNG		
742	510702014	1	FLANGE JOINT	VERSCHRAUBUNG		
744	474002414	2	FLANGE JOINT	VERSCHRAUBUNG		
745	510701214	1	FLANGE JOINT	VERSCHRAUBUNG		
746	247042502	2	FLANGE JOINT	VERSCHRAUBUNG		
747	485434214	1	FLANGE JOINT	VERSCHRAUBUNG		
748	485430714	1	FLANGE JOINT	VERSCHRAUBUNG		
749	247041502	2	FLANGE JOINT	VERSCHRAUBUNG		
752	247117302	15	FLANGE JOINT	VERSCHRAUBUNG		
755	482530814	2	FLANGE JOINT	VERSCHRAUBUNG		
756	471100714	1	FLANGE JOINT	VERSCHRAUBUNG		
757	491101214	1	FLANGE JOINT	VERSCHRAUBUNG		
758	485433414	1	FLANGE JOINT	VERSCHRAUBUNG		
759	485432814	1	FLANGE JOINT	VERSCHRAUBUNG		
760	474001214	1	FLANGE JOINT	VERSCHRAUBUNG		
761	481931114	1	FLANGE JOINT	VERSCHRAUBUNG		

OHNE BILD
WITHOUT ILLUSTRATION
SANS PLANCHE
SIN FIG.
SEM ILUSTRAÇÃO
БЕЗ ИЗОБРАЖЕНИЯ

600000

Pos.	Item	Quantity	Description	Bezeichnung	Serie	K
1	10524595	1	SEALING SET ⇨ ❑ 18	DS		
4	11229182	1	NON-RETURN VALVE	RUECKSCHLAGVENTIL		
5	11229183	1	PRESSURE VALVE	DRUCKVENTIL		
6	510427214	2	DIRECTIONAL CONTROL VALVE	WEGEVENTIL		
7	11229184	1	DIRECTIONAL CONTROL VALVE ⇨ ❑ 19	WEGEVENTIL		
8	10591435	1	DIRECTIONAL CONTROL VALVE ⇨ ❑ 20	WEGEVENTIL		
9	11229185	1	PRESSURE VALVE	DRUCKVENTIL		
10	10537607	2	DOUBLE PRESSURE LIMITING VALVE	DOPPELDRUCKBEGRENZUNGSV		

OHNE BILD
WITHOUT ILLUSTRATION
SANS PLANCHE
SIN FIG.
SEM ILUSTRAÇÃO
БЕЗ ИЗОБРАЖЕНИЯ

600000

Pos.	Item	Quantity	Description	Bezeichnung	Serie	K
1	10099037	24	FOUR LIPPED SEALS	VIERLIPPENDICHTUNG		
2	11301682	10	FOUR LIPPED SEALS	VIERLIPPENDICHTUNG		

OHNE BILD
WITHOUT ILLUSTRATION
SANS PLANCHE
SIN FIG.
SEM ILUSTRAÇÃO
БЕЗ ИЗОБРАЖЕНИЯ

600000

Pos.	Item	Quantity	Description	Bezeichnung	Serie	K
1	693208614	2	MAGNET COIL	MAGNETSPULE		

OHNE BILD
WITHOUT ILLUSTRATION
SANS PLANCHE
SIN FIG.
SEM ILUSTRAÇÃO
БЕЗ ИЗОБРАЖЕНИЯ

600000

Pos.	Item	Quantity	Description	Bezeichnung	Serie	K
1	11229186	2	MAGNET COIL	MAGNETSPULE		
900	10423993	1	SEALING SET	DS		

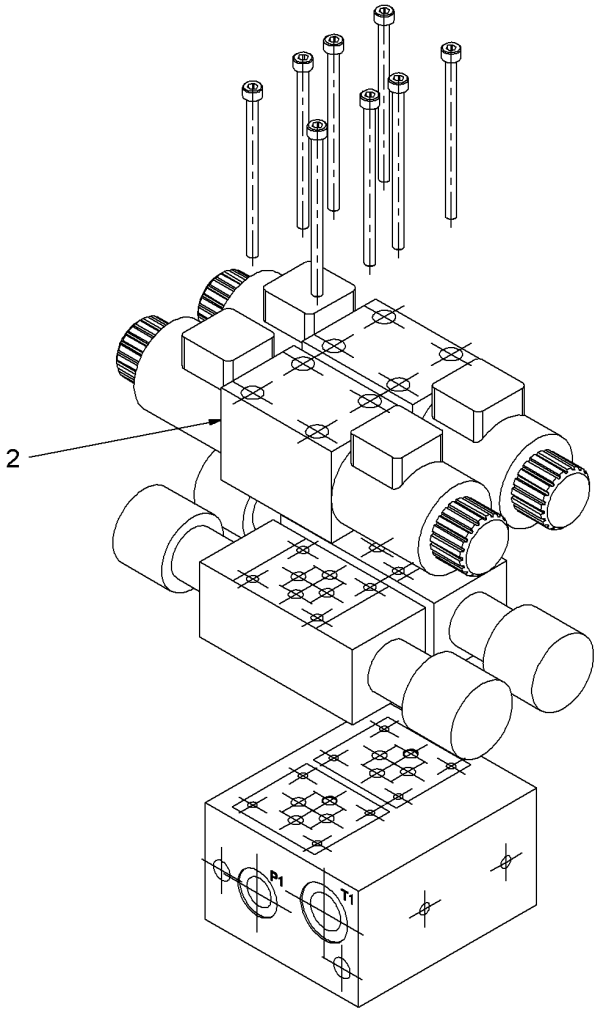

Pos.	Item	Quantity	Description	Bezeichnung	Serie	K
2	11223305	2	DIRECTIONAL CONTROL VALVE	WEGEVENTIL		
3	11293250	2	PRESSURE LIMITING VALVE	DRUCKBEGRENZUNGSVENTIL		

OHNE BILD
WITHOUT ILLUSTRATION
SANS PLANCHE
SIN FIG.
SEM ILUSTRAÇÃO
БЕЗ ИЗОБРАЖЕНИЯ

600000

Pos.	Item	Quantity	Description	Bezeichnung	Serie	K
1	511710214	1	SUPPORTING RING	STUETZRING		
2	726411614	1	O-RING	O-RING		
3	726464214	1	O-RING	O-RING		
4	7364491	1	DUST PLUG	STAUBSTECKER		

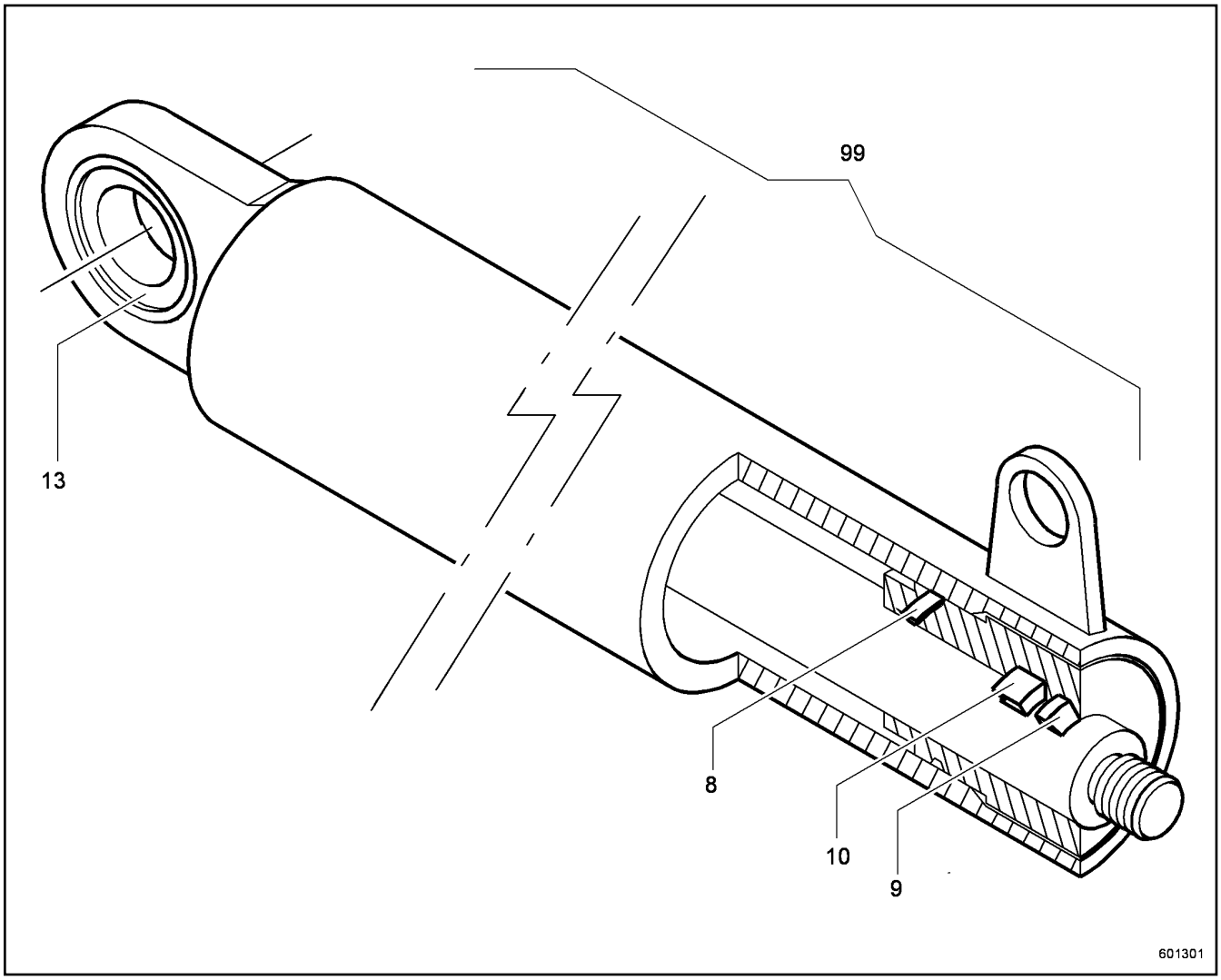

Pos.	Item	Quantity	Description	Bezeichnung	Serie	K
8	726456914	1	O-RING	O-RING		
9	726054414	1	SCRAPER RING	ABSTREIFRING		
10	726307914	1	ROD SEAL	NUTRING		
13	513319614	1	PIVOT HEAD	GELENKKOPF		
99	513319214	1	SEALING SET CPL CYL	DS KPL ZYL		

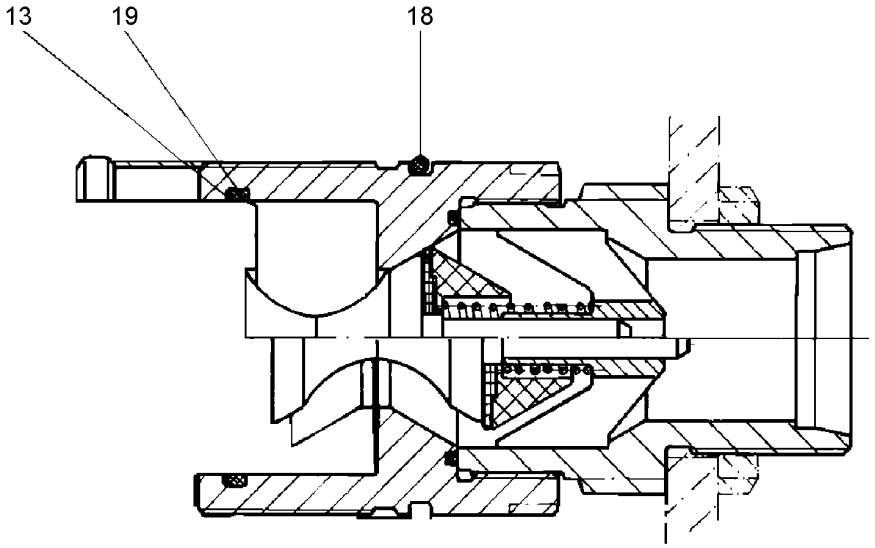

Pos.	Item	Quantity	Description	Bezeichnung	Serie	K
1	7615441	1	SOCKET DUST-PROOF	STAUBMUFFE		
13	511710314	1	SUPPORTING RING	STUETZRING		
18	726403514	1	O-RING	O-RING		
19	726408414	1	O-RING	O-RING		

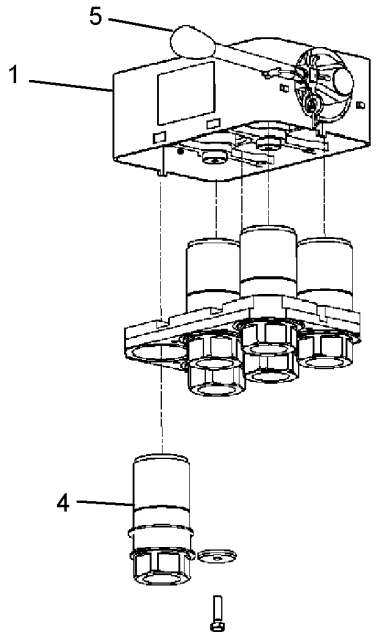

603339

Pos.	Item	Quantity	Description	Bezeichnung	Serie	K
1	10447745	1	HOUSING	GEHAEUSE		
4	10447748	6	SLEEVE	MUFFE		
5	10447749	1	LEVER	HEBEL		

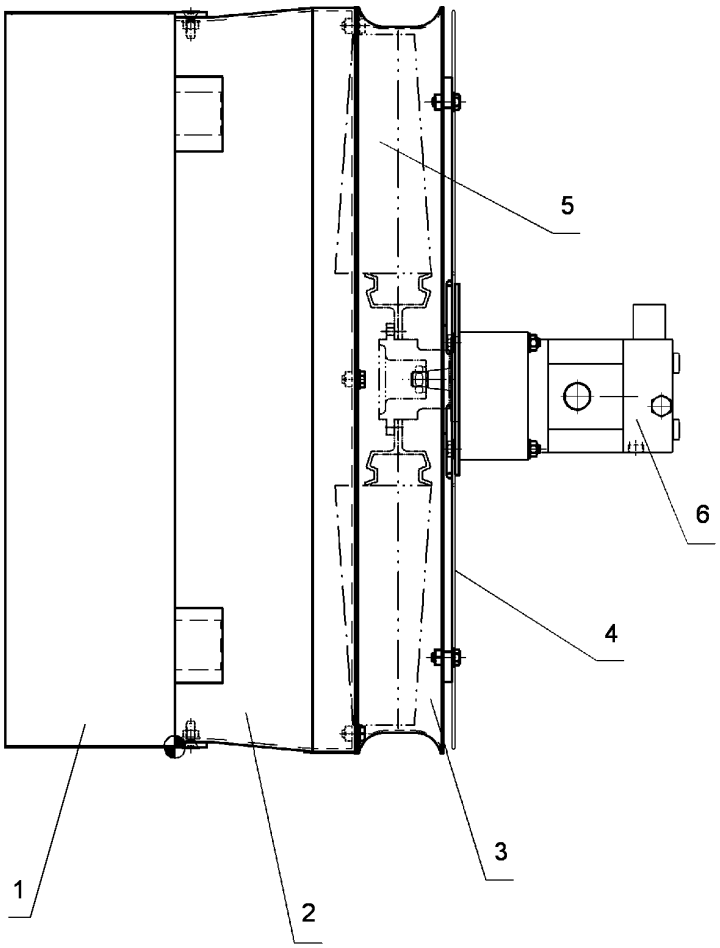

Pos.	Item	Quantity	Description	Bezeichnung	Serie	K
1	10352185	1	OIL COOLER	OELKUEHLER		
2	10352186	1	FAN COWL	LUEFTERHAUBE		
3	10352187	1	VENTILATOR RING	LUEFTERRING		
4	10566030	1	GUARD	SCHUTZGITTER		
5	10352188	1	FAN	LUEFTER		
6	550945314	1	OIL MOTOR ⇨ ❑ 27	OELMOTOR		

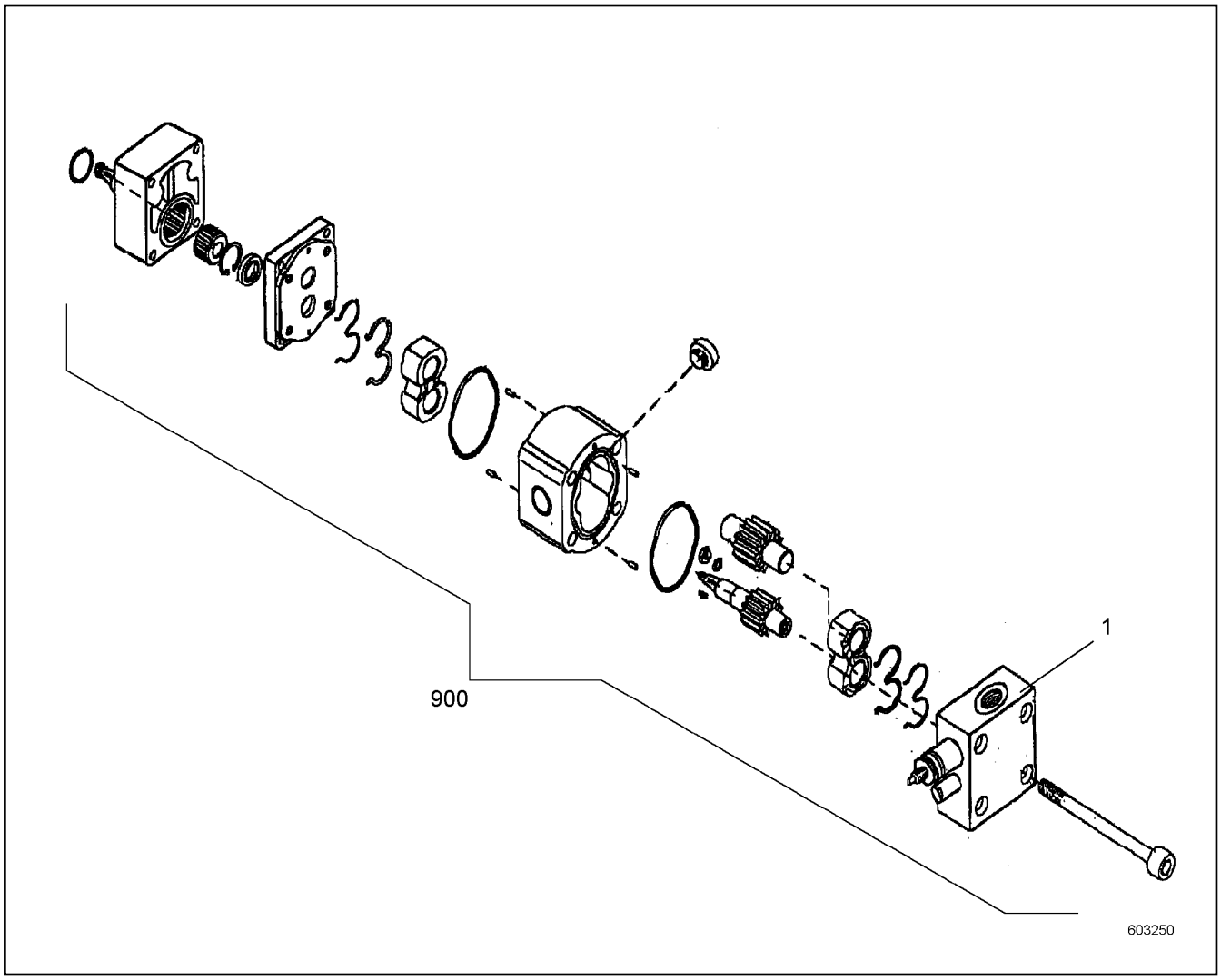

Pos.	Item	Quantity	Description	Bezeichnung	Serie	K
1	10501620	1	LID CPL	DECKEL KPL		
901	10493890	1	SEALING SET MOTOR	DS MOTOR		

OHNE BILD
WITHOUT ILLUSTRATION
SANS PLANCHE
SIN FIG.
SEM ILUSTRAÇÃO
БЕЗ ИЗОБРАЖЕНИЯ

600000

Pos.	Item	Quantity	Description	Bezeichnung	Serie	K
11	11247121	1	CABLE LOOM W 2	KABELSTRANG W 2		
13	10563643	1	CABLE LOOM W 3	KABELSTRANG W 3		
21	10351656	1	CAN MODULE	CAN MODUL		
22	10351667	1	CAN MODULE	CAN MODUL		
23	10351660	1	CAN MODULE	CAN MODUL		
24	10351671	1	CAN MODULE	CAN MODUL		
26	10351668	1	CAN MODULE	CAN MODUL		
27	10351672	1	CAN MODULE	CAN MODUL		
28	10351674	1	CAN MODULE ⇨ ❑ 30	CAN MODUL		
30	11229635	3	TERMINAL CAP	ENDPOL KAPPE		
31	10664204	2	BATTERY	BATTERIE		
32	10547876	2	BATTERY TERMINAL CLAMP	BATTERIEKLEMME		
33	10224316	1	BATTERY TERMINAL CLAMP	BATTERIEKLEMME		
34	10530489	1	FUSE HOLDER ⇨ ❑ 31	SICHERUNGSHALTER		
35	606070908	1	BATTERY MAIN SWITCH	BATTERIEHAUPTSCHALTER		
37	7412268	2	ELBOW PIECE	WINKELSTUECK		
39	606214914	3	EMERGENCY SWITCH	GEFAHRENSCHALTER		
40	11241756	1	TEMPERATURE SENSOR	TEMPERATURFUEHLER		
41	11258086	1	CONTROL LIGHT	KONTROLLLEUCHTE		
42	11461533	1	NAMEPLATE ACCIDENT PREVENTION	SCHILD UNFALLVERHUETUNG		
43	606655108	1	LIMIT SENSOR	GRENZTASTER		
45	606281014	1	CAMS LIMIT SWITCH	NOCKENENDSCHALTER		
46	606281114	1	DRIVE FLANGE	ANTRIEBSFLANSCH		
50	10493626	1	TEMP SENSOR	TEMP FUEHLER		

OHNE BILD
WITHOUT ILLUSTRATION
SANS PLANCHE
SIN FIG.
SEM ILUSTRAÇÃO
БЕЗ ИЗОБРАЖЕНИЯ

600000

Pos.	Item	Quantity	Description	Bezeichnung	Serie	K
52	10288438	1	BACK-UP-ALARM	BACK-UP-ALARM		
60	7027205	2	WORK LIGHT ⇨ ❑ 32	ARBEITSSCHEINWERFER		
61	10224272	2	HOLDER	HALTER		
65	11219179	2	PRESSURE SENSOR	DRUCKAUFNEHMER		
66	10515473	2	PRESSURE SENSOR	DRUCKAUFNEHMER		
71	10539250	1	KEY SWITCH	SCHLUESSELSCHALTER		
72	10595399	1	KEYRING PENDANT	SCHLUESSELANHAENGER		
73	773400308	0.25	STEEL WIRE ROPE	STAHLDRAHTSEIL		
74	602206514	2	CABLE LUG	KABELSCHUH		
81	10517426	1	LEVEL PROBE	NIVEAUSONDE		
91	918365114	1	BYPASS CONNECTOR	UEBERBRUECKUNGSSTECKER		
93	605604914	1	BS HOUSING	SOCKELGEHAEUSE		
94	605609514	1	FEMALE INSERT	BUCHSENEINSATZ		
100	10224500	4	WORK LIGHT	ARBEITSSCHEINWERFER		
103	10566458	1	TERMINAL BOX ⇨ ❑ 33	KLEMMKASTEN		
111	11239082	1	CONTROL CONSOLE ⇨ ❑ 35	STEUERPULT		
120	11222783	3	PATCH CORD	STECKER M.LEITUNG		
121	11261378	3	PATCH CORD	STECKER M.LEITUNG		
130	11234767	30	CABLE TIE	KABELBINDER		
131	10520078	1	SOCKET	STECKDOSE		

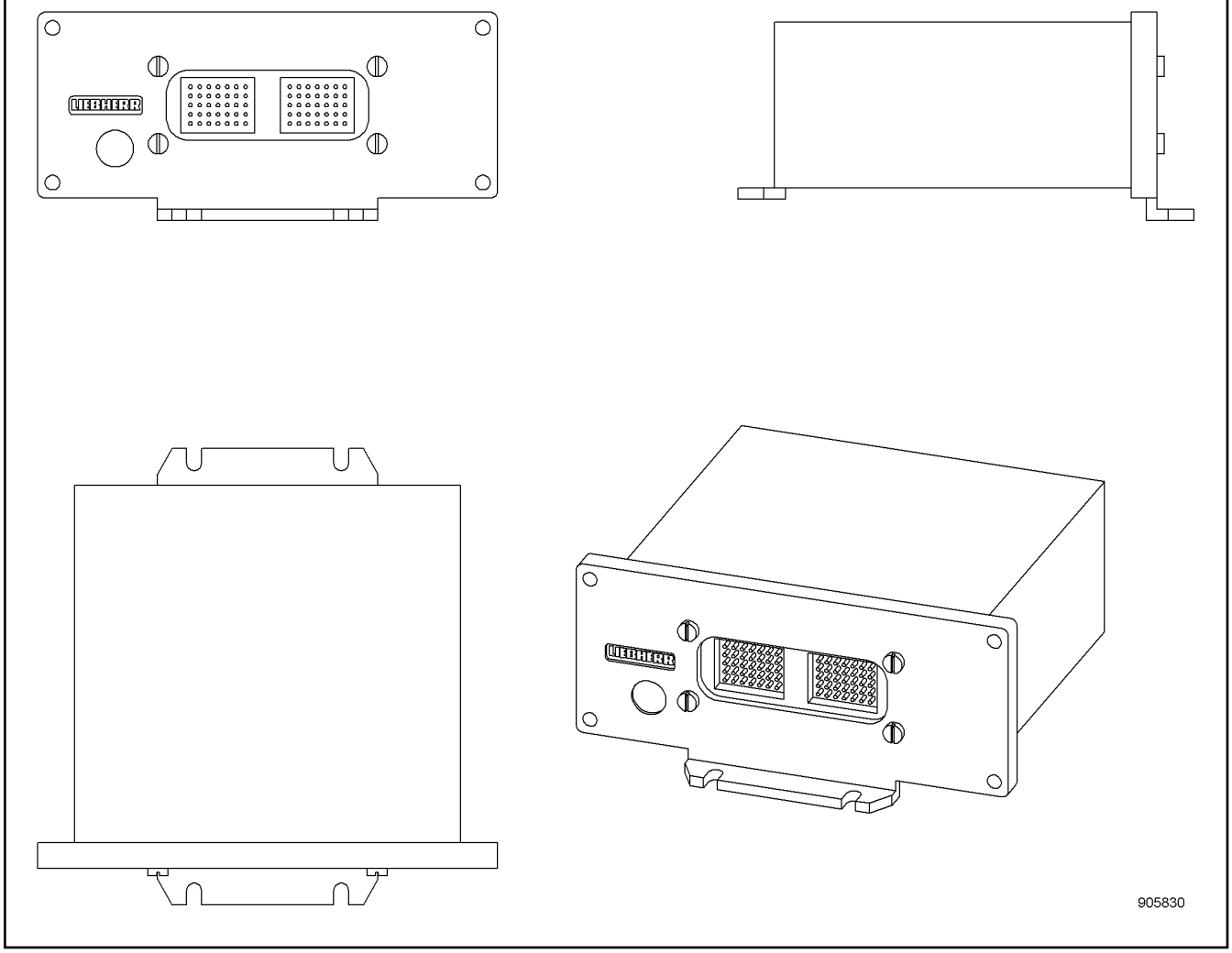

Pos.	Item	Quantity	Description	Bezeichnung	Serie	K
1	10347554	1	CAN MODULE	CAN MODUL		
2	605756914	1	UNIVERSAL LABEL	ETIKETT UNIVERSAL		

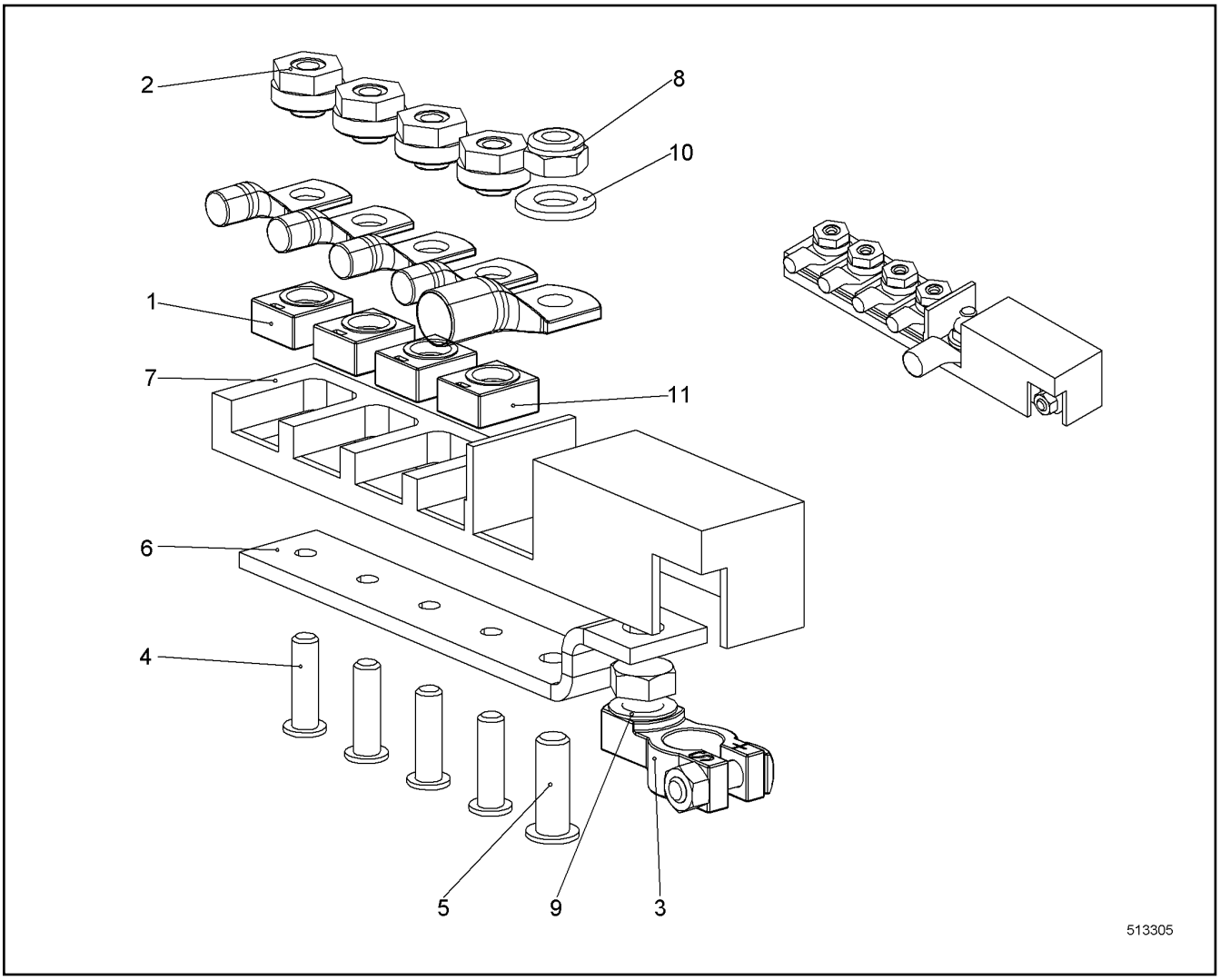

Pos.	Item	Quantity	Description	Bezeichnung	Serie	K
1	10224306	1	FUSE CARTRIDGE	SICHERUNGSEINSATZ		
3	10224316	1	BATTERY TERMINAL CLAMP	BATTERIEKLEMME		
4	10225045	4	SOCKET HEAD SCREW UN 1206 M8X30	ZYLINDERSCHRAUBE		
5	10502692	1	SCREW UN 1206 M10X30	SCHRAUBE		
6	10530486	1	FLAT COPPER EL	FLACHKUPFER EL		
7	10530487	1	COVER	ABDECKUNG		
8	411901114	1	HEX NUT ISO 10511 M10 10	SECHSKANTMUTTER		
9	425221314	1	SERRATED LOCK WASHER DIN 6798 13	FAECHERSCHEIBE		
10	420001514	1	WASHER ISO 7089 12 A4	SCHEIBE		
11	10224307	3	FUSE CARTRIDGE	SICHERUNGSEINSATZ		

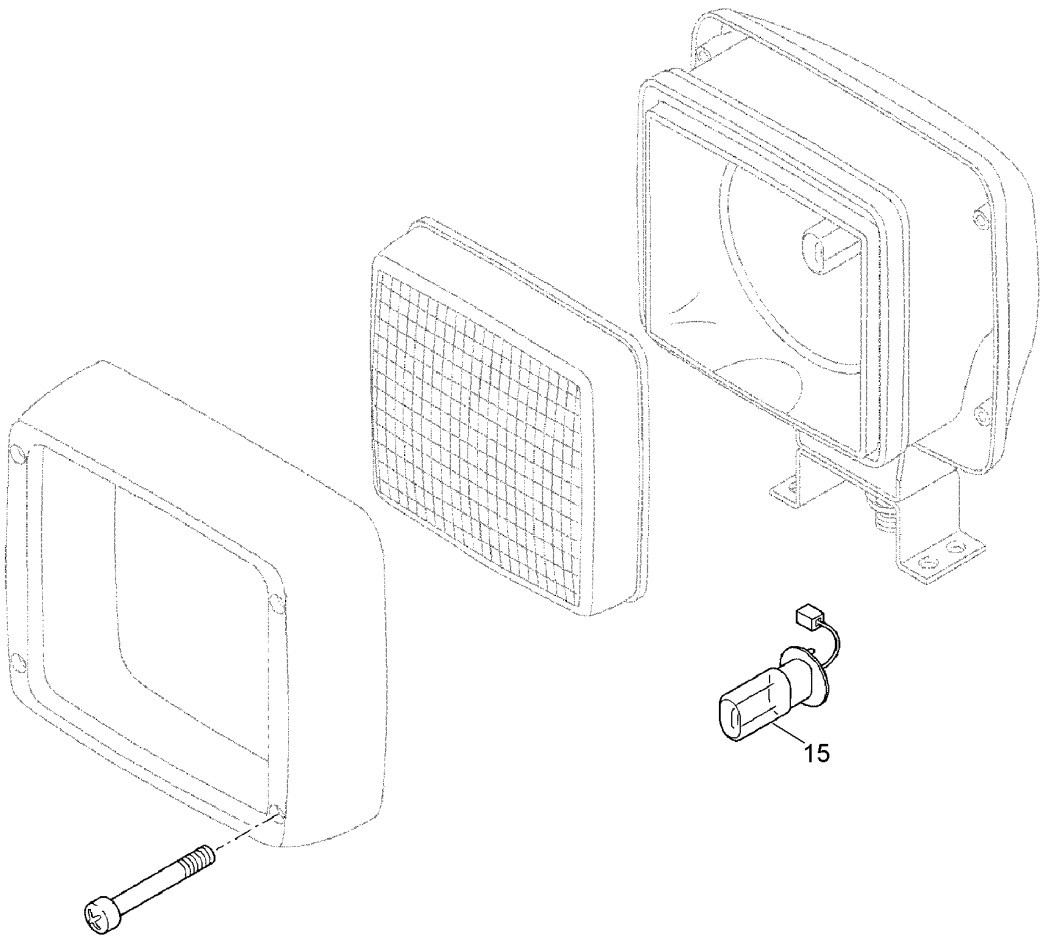

Pos.	Item	Quantity	Description	Bezeichnung	Serie	K
15	607021114	1	LIGHT BULB	GLUEHLAMPE		

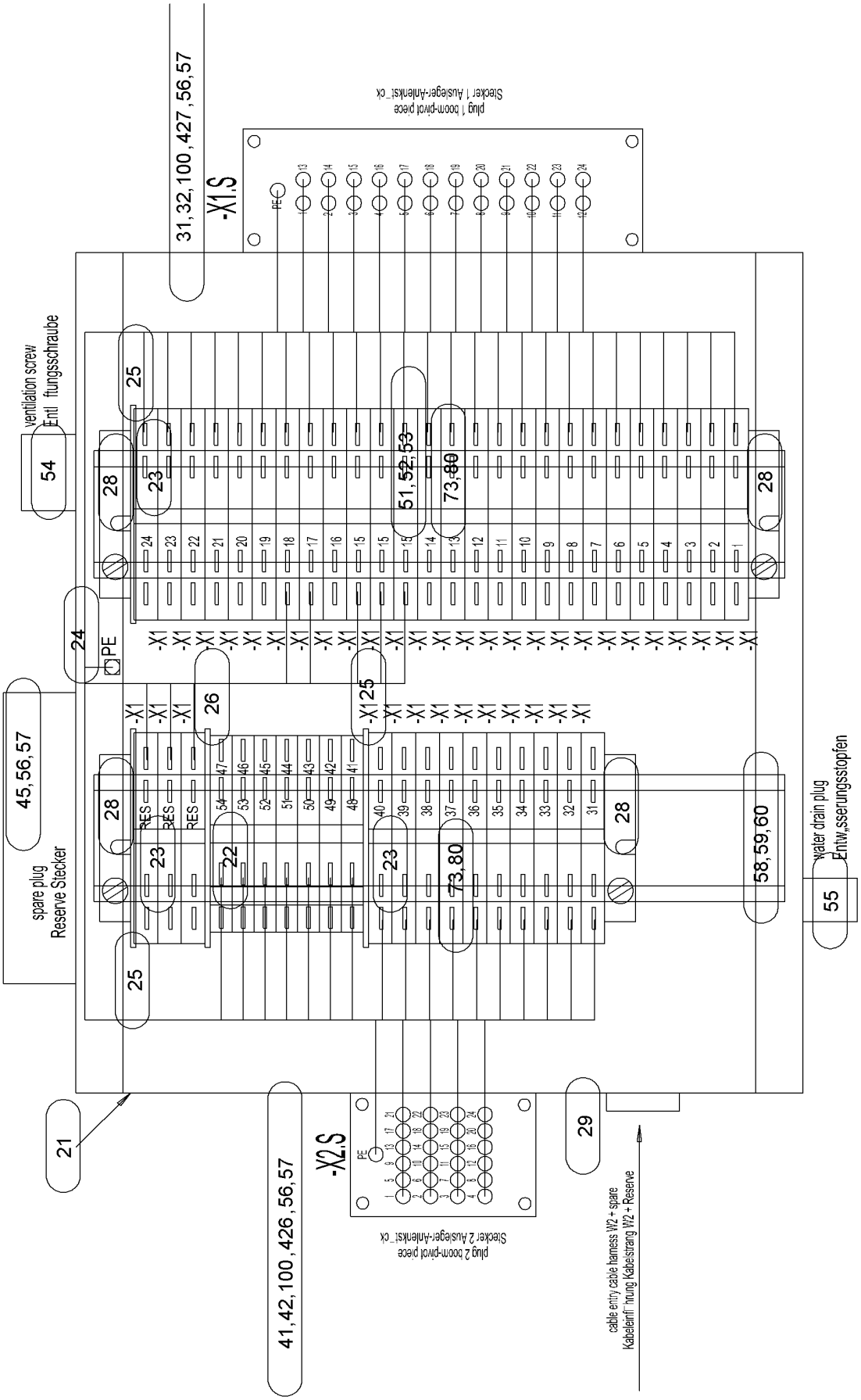
31,32,100,427,56,57
-X1.S
Stecker 1 Ausleger-Anlenkst_ck
plug 1 boom-pivot piece
ventilation screw
Entl ftungsschraube
54
25
28
23
51,52,53
73,80
24
PE
-X1
26
-X1.25
45,56,57
spare plug
Reserve Stecker
RES
22
58,59,60
water drain plug
Entw„sserungsstopfen
55
21
41,42,100,426,56,57
-X2.S
Stecker 2 Ausleger-Anlenkst_ck
plug 2 boom-pivot piece
29
cable entry cable harness W2 + spare
Kabeleinf hrung Kabelstrang W2 + Reserve
514896

Pos.	Item	Quantity	Description	Bezeichnung	Serie	K
21	918975514	1	HOUSING DRILLED	GEHAEUSE GEBOHRT		
22	602125114	7	SERIES TERMINAL	REIHENKLEMME		
23	602153814	39	SERIES TERMINAL	REIHENKLEMME		
24	602206114	1	CABLE LUG	KABELSCHUH		
25	602730714	3	CLOSING PLATE	ABSCHLUSSPLATTE		
26	602812714	1	CLOSING PLATE	ABSCHLUSSPLATTE		
28	602720514	4	END ANGLE	ENDWINKEL		
29	693061314	1	STOPPER PLUG	BLINDSTOPFEN		
31	605600401	1	ENCLOSURE ADD-ON	GEHAEUSE ANBAU		
32	605609514	1	FEMALE INSERT	BUCHSENEINSATZ		
41	605613701	1	ADD-ON HOUSING	ANBAUGEHAEUSE		
42	605612014	1	FEMALE INSERT	BUCHSENEINSATZ		
45	693149814	1	ADD-ON HOUSING	ANBAUGEHAEUSE		
51	602731714	1	CROSS CONNECTOR	QUERVERBINDER		
52	602835914	1	DESIGNATION CARD	BEZEICHNUNGSKARTE		
54	485581914	1	VENTILATION SCREW	ENTLUEFTUNGSSCHRAUBE		
55	602501208	1	WATER DRAIN PLUG	ENTWAESSERUNGSSTOPFEN		
56	10507964	12	LOCKING RING 4	SICHERUNGSRING		
57	10539448	12	SOCKET HEAD SCREW ISO 4762 M4X12 A4-7	ZYLINDERSCHRAUBE		
58	602106714	0.37	CARRIER RAIL	TRAGSCHIENE		
59	602134114	4	FASTENING SCREW	BEF SCHRAUBE		
60	420000414	4	WASHER ISO 7089 6 A4	SCHEIBE		
73	602303214	1	RECEPTACLE	STECKHUELSE		
80	602209314	42	RECEPTACLE	STECKHUELSE		
100	602307708	2	WIRED END FERRULE	ADERENDHUELSE		
251	10870540	10.7	ELECTR.CABLE	KFZ-LEITUNG		
426	605610301	24	CONTACT BUSHING	KONTAKTBUCHSE		
427	605601801	24	CONTACT BUSHING	KONTAKTBUCHSE		

OHNE BILD
WITHOUT ILLUSTRATION
SANS PLANCHE
SIN FIG.
SEM ILUSTRAÇÃO
БЕЗ ИЗОБРАЖЕНИЯ

600000

Pos.	Item	Quantity	Description	Bezeichnung	Serie	K
10	11236937	1	CONTROL CONSOLE	STEUERPULT		
11	11239085	1	WIRING HARNESS	KABELSTRANG		

ACHTUNG !
ATTENTION !
ATTENTION !
ATENCIÓN !
ATENÇÃO !
ВНИМАНИЕ

Für Schlauchbestellungen kann über die Schlauchnummer, in der entsprechenden Schlauchliste, die Identnummer festgestellt werden.

For ordering flexible hoses you can find the identification number through the hose-number in the corresponding hose-list.

Pour des ordres de tuyau flexible le nombre d'identification on voit dans la liste de tuyau flexible correspondente.

Para el pedido de manguera, indicar el número de identificación de la manguera de la lista respectiva.

Para se encomendar uma mangueira, consulte o número de identificaçao na respectiva lista de mangueiras.

Для оформления заказов на шланги/рукавы идент. № может быть определен при помощи номера шланга/рукава, указанного в соотетствующем перечне шлангов/рукавов.

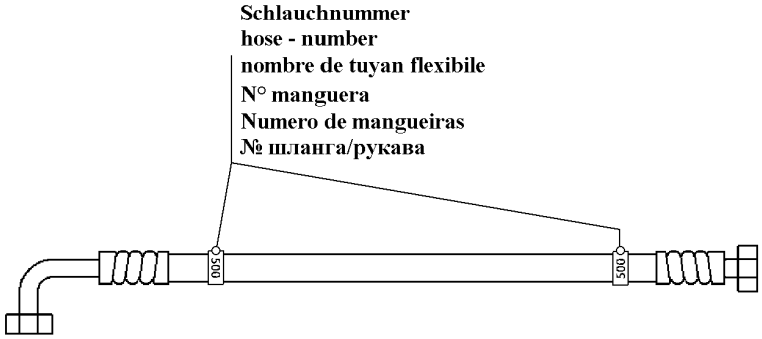

500000

Pos.	Item	Quantity	Description	Bezeichnung	Serie	K
500	995972114	1	HOSE CPL	SCHLAUCH KPL		
501	995972214	1	HOSE CPL	SCHLAUCH KPL		
502	995972314	1	HOSE CPL	SCHLAUCH KPL		
503	995972414	1	HOSE CPL	SCHLAUCH KPL		
504	995972514	1	HOSE CPL	SCHLAUCH KPL		
505	995972614	1	HOSE CPL	SCHLAUCH KPL		
506	928183014	1	HOSE CPL	SCHLAUCH KPL		
508	928765014	1	HOSE CPL	SCHLAUCH KPL		
509	991168714	1	HOSE CPL	SCHLAUCH KPL		
510	995972814	1	HOSE CPL	SCHLAUCH KPL		
511	928010214	1	HOSE CPL	SCHLAUCH KPL		
512	928010214	1	HOSE CPL	SCHLAUCH KPL		
513	928010214	1	HOSE CPL	SCHLAUCH KPL		
514	928010214	1	HOSE CPL	SCHLAUCH KPL		
515	995972914	1	HOSE CPL	SCHLAUCH KPL		
516	993657714	1	HOSE CPL	SCHLAUCH KPL		
518	995973014	1	HOSE CPL	SCHLAUCH KPL		
519	994465914	1	HOSE CPL	SCHLAUCH KPL		
520	992261414	1	HOSE CPL	SCHLAUCH KPL		
521	995060114	1	HOSE CPL	SCHLAUCH KPL		
522	928443714	1	HOSE CPL	SCHLAUCH KPL		
523	995973214	1	HOSE CPL	SCHLAUCH KPL		
524	919735014	1	HOSE CPL	SCHLAUCH KPL		
525	928461114	1	HOSE CPL	SCHLAUCH KPL		
526	928456714	1	HOSE CPL	SCHLAUCH KPL		
527	919706714	1	HOSE CPL	SCHLAUCH KPL		

ACHTUNG !
ATTENTION !
ATTENTION !
ATENCIÓN !
ATENÇÃO !
ВНИМАНИЕ

Für Schlauchbestellungen kann über die Schlauchnummer, in der entsprechenden Schlauchliste, die Identnummer festgestellt werden.

For ordering flexible hoses you can find the identification number through the hose-number in the corresponding hose-list.

Pour des ordres de tuyau flexible le nombre d'identification on voit dans la liste de tuyau flexible correspondente.

Para el pedido de manguera, indicar el número de identificación de la manguera de la lista respectiva.

Para se encomendar uma mangueira, consulte o número de identificaçao na respectiva lista de mangueiras.

Для оформления заказов на шланги/рукавы идент. № может быть определен при помощи номера шланга/рукава, указанного в соотетствующем перечне шлангов/рукавов.

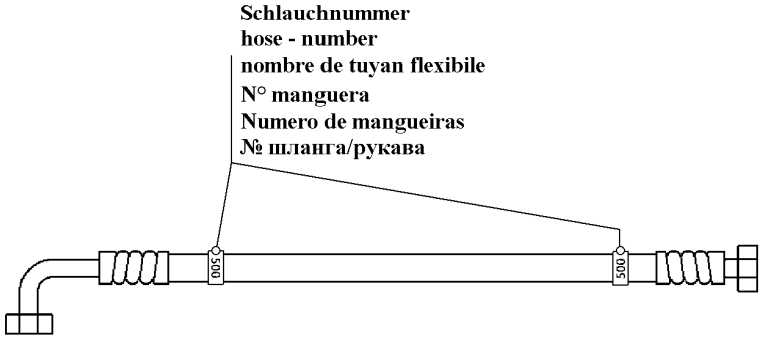

500000

Pos.	Item	Quantity	Description	Bezeichnung	Serie	K
532	995027514	1	HOSE CPL	SCHLAUCH KPL		
533	919140514	1	HOSE CPL	SCHLAUCH KPL		
535	993734014	1	HOSE CPL	SCHLAUCH KPL		
536	928445414	1	HOSE CPL	SCHLAUCH KPL		
537	993774614	1	HOSE CPL	SCHLAUCH KPL		
538	995176314	1	HOSE CPL	SCHLAUCH KPL		
540	995207914	1	HOSE CPL	SCHLAUCH KPL		
541	996778614	1	HOSE CPL	SCHLAUCH KPL		
545	994460114	1	HOSE CPL	SCHLAUCH KPL		
546	928020314	1	HOSE CPL	SCHLAUCH KPL		
547	928032214	1	HOSE CPL	SCHLAUCH KPL		
548	928764814	1	HOSE CPL	SCHLAUCH KPL		
551	914798914	1	HOSE CPL	SCHLAUCH KPL		
552	991587514	1	HOSE CPL	SCHLAUCH KPL		
555	929414814	1	HOSE CPL	SCHLAUCH KPL		
556	918873814	1	HOSE CPL	SCHLAUCH KPL		
557	992569114	1	HOSE CPL	SCHLAUCH KPL		
559	928885614	1	HOSE CPL	SCHLAUCH KPL		
566	995264214	1	HOSE CPL	SCHLAUCH KPL		
567	996467014	1	HOSE CPL	SCHLAUCH KPL		
569	992258514	1	HOSE CPL	SCHLAUCH KPL		
570	991390514	1	HOSE CPL	SCHLAUCH KPL		
572	918245214	1	HOSE CPL	SCHLAUCH KPL		
575	914794514	1	HOSE CPL	SCHLAUCH KPL		
576	995440614	1	HOSE CPL	SCHLAUCH KPL		
577	992261314	1	HOSE CPL	SCHLAUCH KPL		

ACHTUNG !
ATTENTION !
ATTENTION !
ATENCIÓN !
ATENÇÃO !
ВНИМАНИЕ

Für Schlauchbestellungen kann über die Schlauchnummer, in der entsprechenden Schlauchliste, die Identnummer festgestellt werden.

For ordering flexible hoses you can find the identification number through the hose-number in the corresponding hose-list.

Pour des ordres de tuyau flexible le nombre d'identification on voit dans la liste de tuyau flexible correspondente.

Para el pedido de manguera, indicar el número de identificación de la manguera de la lista respectiva.

Para se encomendar uma mangueira, consulte o número de identificaçao na respectiva lista de mangueiras.

Для оформления заказов на шланги/рукавы идент. № может быть определен при помощи номера шланга/рукава, указанного в соотетствующем перечне шлангов/рукавов.

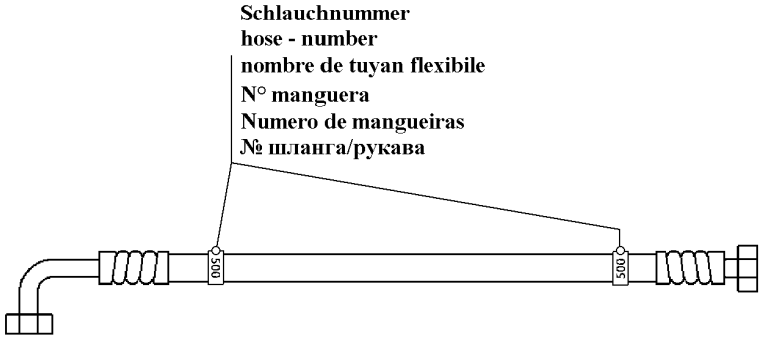

500000

Pos.	Item	Quantity	Description	Bezeichnung	Serie	K
578	995006114	1	HOSE CPL	SCHLAUCH KPL		
579	991253814	1	HOSE CPL	SCHLAUCH KPL		
580	928123014	1	HOSE CPL	SCHLAUCH KPL		
581	919714914	1	HOSE CPL	SCHLAUCH KPL		
582	929473314	1	HOSE CPL	SCHLAUCH KPL		
583	990038114	1	HOSE CPL	SCHLAUCH KPL		
584	928110014	1	HOSE CPL	SCHLAUCH KPL		
585	928357214	1	HOSE CPL	SCHLAUCH KPL		
586	991528514	1	HOSE CPL	SCHLAUCH KPL		
587	991375814	1	HOSE CPL	SCHLAUCH KPL		
590	996467114	1	HOSE CPL	SCHLAUCH KPL		
591	992298714	1	HOSE CPL	SCHLAUCH KPL		
592	914762914	1	HOSE CPL	SCHLAUCH KPL		
594	992519014	1	HOSE CPL	SCHLAUCH KPL		
595	918810914	1	HOSE CPL	SCHLAUCH KPL		
596	911256414	1	HOSE CPL	SCHLAUCH KPL		
597	928712614	1	HOSE CPL	SCHLAUCH KPL		
598	918285814	1	HOSE CPL	SCHLAUCH KPL		
5020	991209514	1	HOSE CPL	SCHLAUCH KPL		
5021	993775014	1	HOSE CPL	SCHLAUCH KPL		
5022	914792514	1	HOSE CPL	SCHLAUCH KPL		

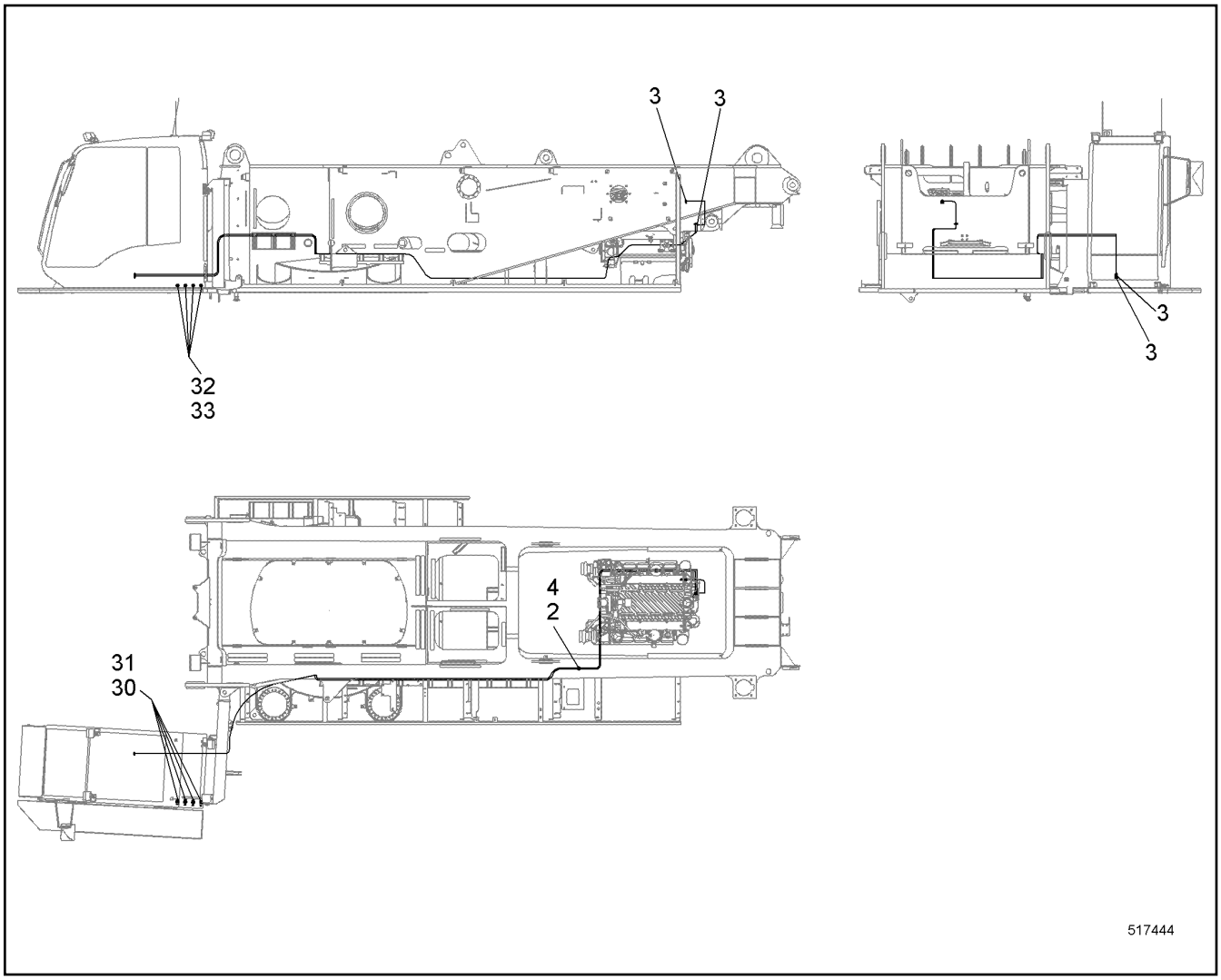

Pos.	Item	Quantity	Description	Bezeichnung	Serie	K
2	11621783	21.55	COOLING WATER HOSE	KUEHLWASSERSCHLAUCH		
3	4900778	4	HOSE CLAMP	SCHLAUCHSCHELLE		
4	11231109	1	HOSE LIST ⇨ ❑ 40	SCHLAUCHLISTE		
30	247000802	4	FLANGE JOINT	VERSCHRAUBUNG		
31	942430914	4	FITTINGS	STUTZEN		
32	477102614	4	FLANGE JOINT	VERSCHRAUBUNG		
33	247049102	4	FLANGE JOINT	VERSCHRAUBUNG		

ACHTUNG !
ATTENTION !
ATTENTION !
ATENCIÓN !
ATENÇÃO !
ВНИМАНИЕ

Für Schlauchbestellungen kann über die Schlauchnummer, in der entsprechenden Schlauchliste, die Identnummer festgestellt werden.

For ordering flexible hoses you can find the identification number through the hose-number in the corresponding hose-list.

Pour des ordres de tuyau flexible le nombre d'identification on voit dans la liste de tuyau flexible correspondente.

Para el pedido de manguera, indicar el número de identificación de la manguera de la lista respectiva.

Para se encomendar uma mangueira, consulte o número de identificaçao na respectiva lista de mangueiras.

Для оформления заказов на шланги/рукавы идент. № может быть определен при помощи номера шланга/рукава, указанного в соотетствующем перечне шлангов/рукавов.

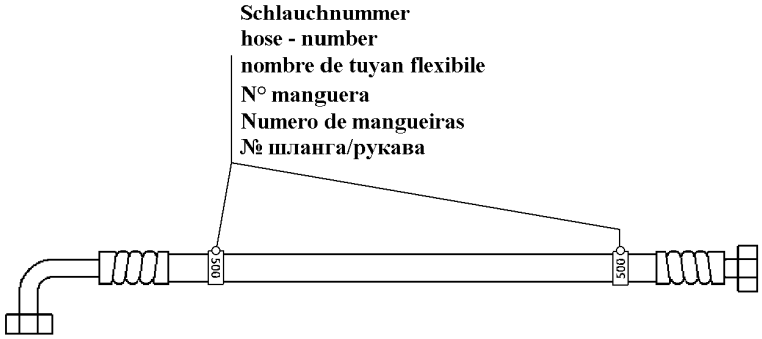

500000

Pos.	Item	Quantity	Description	Bezeichnung	Serie	K
822	928135714	1	HOSE CPL	SCHLAUCH KPL		
823	929459114	1	HOSE CPL	SCHLAUCH KPL		
824	928861414	1	HOSE CPL	SCHLAUCH KPL		
825	929491914	1	HOSE CPL	SCHLAUCH KPL		
826	991362714	1	HOSE CPL	SCHLAUCH KPL		

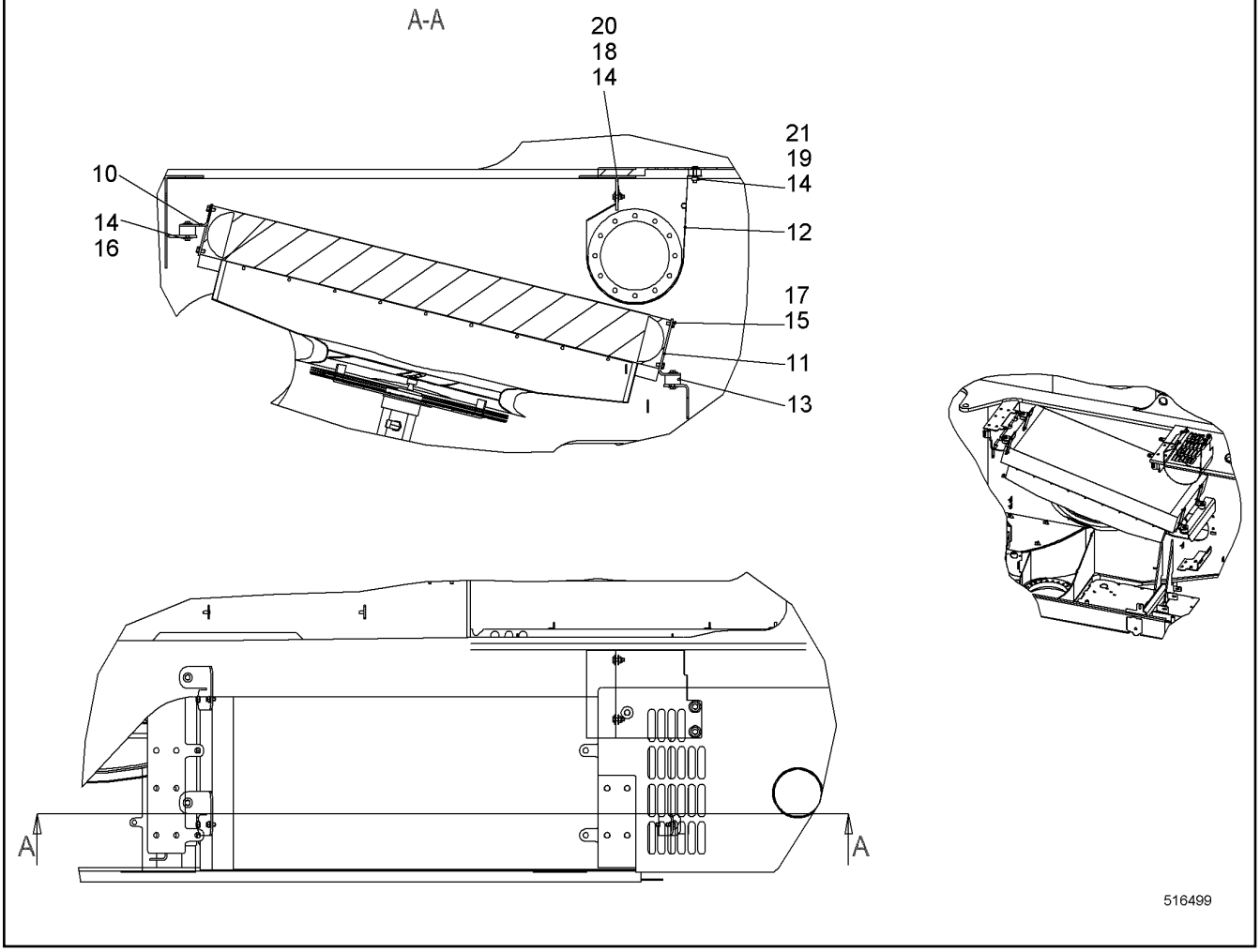

Pos.	Item	Quantity	Description	Bezeichnung	Serie	K
10	10336583	2	BRACKET	BUEGEL		
11	10336584	2	BRACKET	BUEGEL		
12	10580585	1	PROTECTION GUARD	SCHUTZBLECH		
13	726922214	4	RUBBER MOUNT	LAGER GUMMI		
14	10540511	14	WASHER ISO 7093-1 10 A4	SCHEIBE		
15	420001114	8	WASHER ISO 7089 10 A4	SCHEIBE		
16	406527414	8	HEX SCREW ISO 4017 M10X18 A4-70	SECHSKANTSCHRAUBE		
17	406518714	8	HEX SCREW ISO 4017 M10X20 A4-70	SECHSKANTSCHRAUBE		
18	406511614	2	HEX SCREW ISO 4017 M10X30 A4-70	SECHSKANTSCHRAUBE		
19	406512014	2	HEX SCREW ISO 4017 M10X45 A4-70	SECHSKANTSCHRAUBE		
20	10540494	2	HEX NUT ISO 10511 M10 A4	SECHSKANTMUTTER		
21	485549914	2	CAGE NUT M10-RR-140-47	KAEFIGMUTTER		

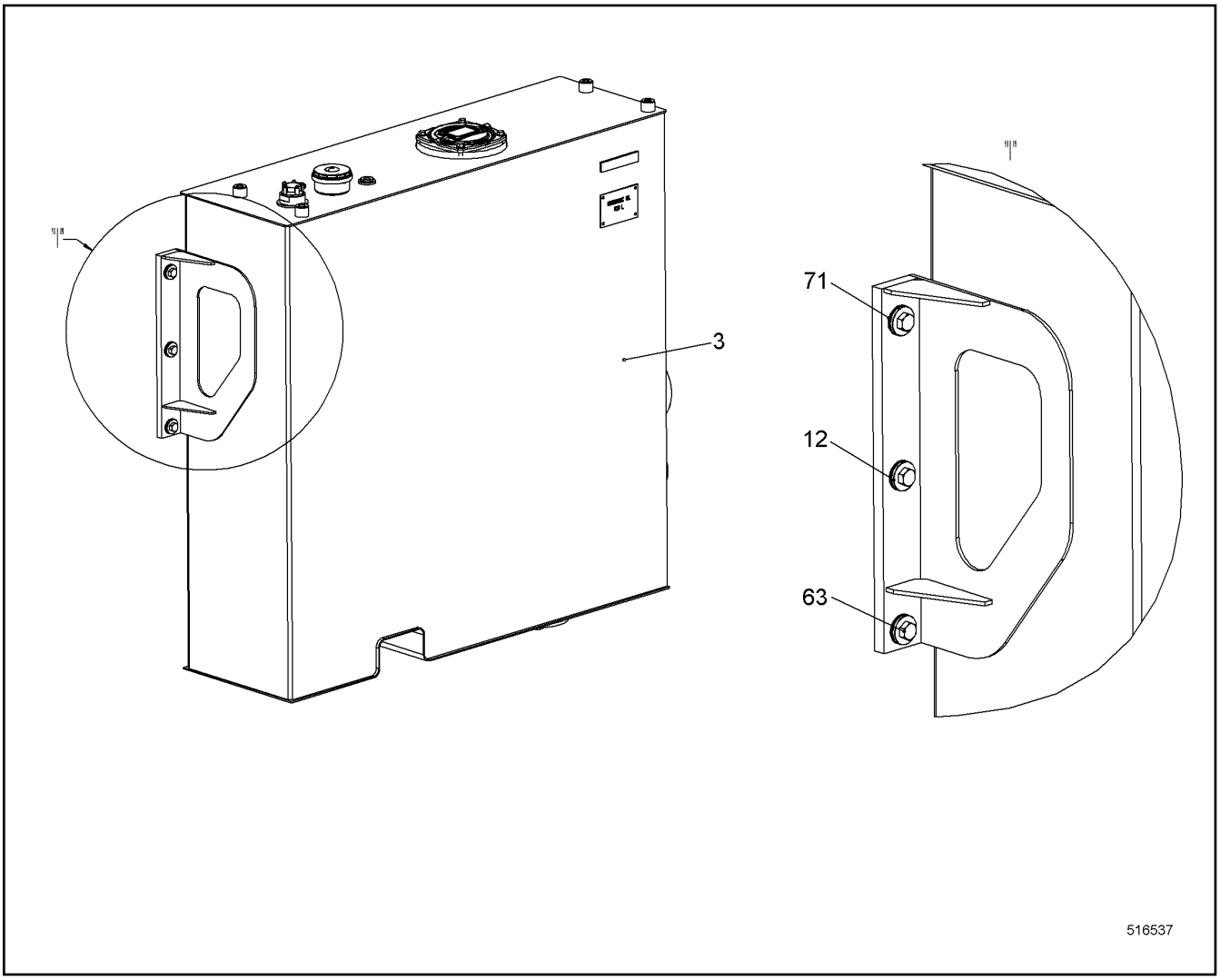

Pos.	Item	Quantity	Description	Bezeichnung	Serie	K
3	10560701	1	TANK HYDR CPL ⇨ ❑ 43	TANK HYDR KPL		
12	10588730	3	BUSHING EN 10060 RD44X26.5 S355J2;EN 10	BUCHSE		
62	10543903	3	HEX SCREW ISO 4017 M16X50 10.9	SECHSKANTSCHRAUBE		
63	10543904	3	HEX SCREW ISO 4017 M16X55 10.9	SECHSKANTSCHRAUBE		
70	421300414	3	WASHER DIN 6340 17 C35	SCHEIBE		

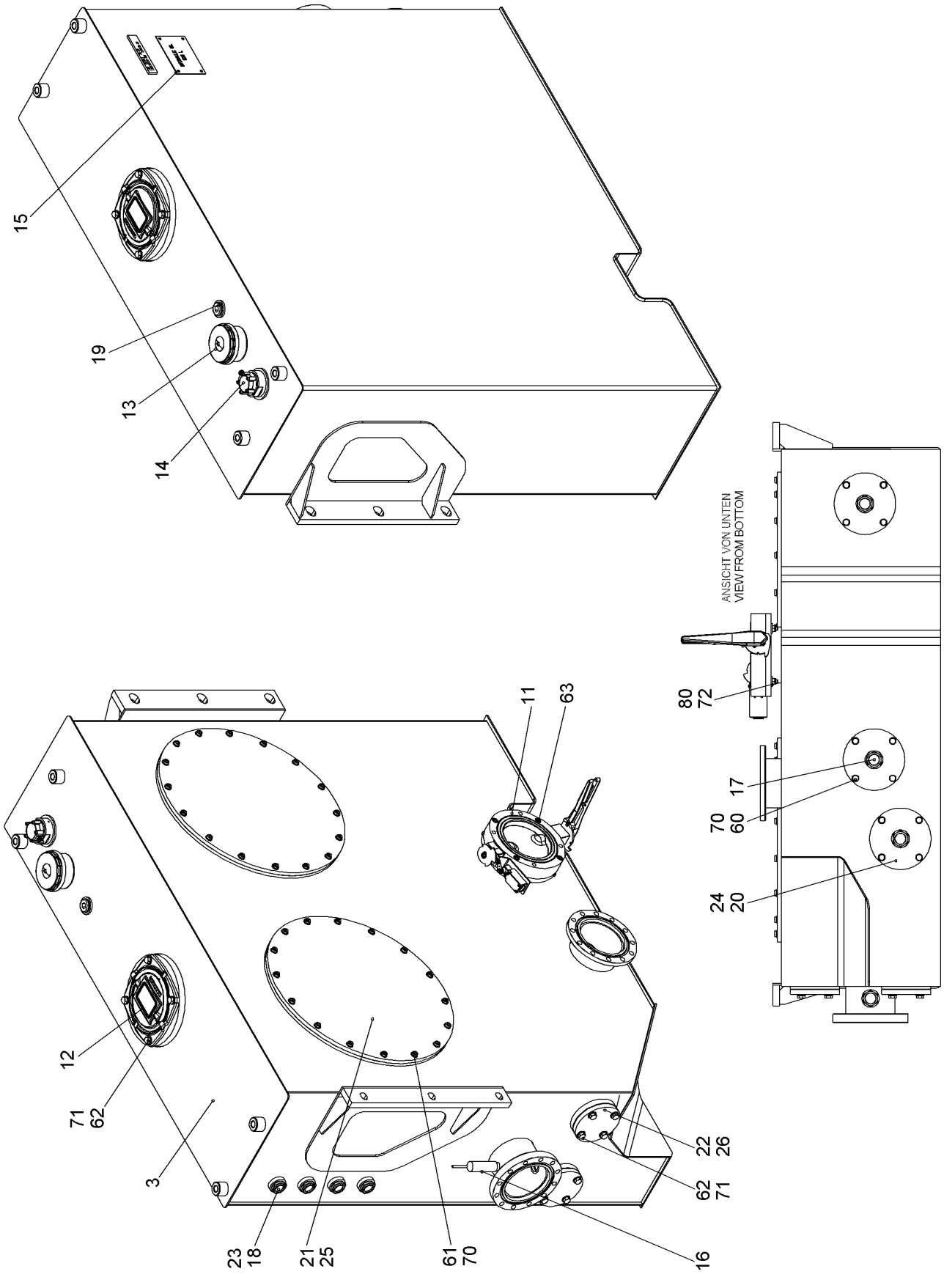
15
19
13
14
ANSICHT VON UNTEN
VIEW FROM BOTTOM
80
72
70
60
17
24
20
11
63
12
71
62
3
23
18
21
25
61
70
16
62
71
22
26
516538

Pos.	Item	Quantity	Description	Bezeichnung	Serie	K
3	10560703	1	TANK HYDR ST.CONST.	TANK HYDR SCHWK		
11	10526733	1	SHUT OFF DEVICE	ABSPERRORGAN		
12	10515724	1	RETURN FILTER ⇨ ❑ 45	RUECKLAUFFILTER		
13	510690614	1	AERATION FILTER ⇨ ❑ 46	BELUEFTUNGSFILTER		
14	10529210	1	LEVEL SENSOR	NIVEAUGEBER		
15	10584544	1	SIGN	SCHILD		
16	10352111	1	PRESSURE SWITCH	DRUCKSCHALTER		
17	403900714	4	OIL DRAIN PLUG G1"X11 MS	OELABLASSSCHRAUBE		
18	5106280	4	OIL SIGHT GLASS	OELSTANDSAUGE		
19	477704614	1	FLANGE JOINT	VERSCHRAUBUNG		
21	942264714	2	COVER	DECKEL		
22	552066514	2	FLANGE	FLANSCH		
23	7101022	4	SEALING RING	DICHTRING		
24	726409814	3	O-RING	O-RING		
25	726428714	2	O-RING	O-RING		
26	552006114	2	SEAL	DICHTUNG		
60	406511914	12	HEX SCREW ISO 4017 M10X25 A4-70	SECHSKANTSCHRAUBE		
61	4072083	32	SOCKET HEAD SCREW DIN 7984 M10X25 8.8	ZYLINDERSCHRAUBE		
62	406517314	12	HEX SCREW ISO 4017 M12X30 A4-70	SECHSKANTSCHRAUBE		
63	4630200	4	SOCKET HEAD SCREW ISO 4762 M10X65 10.9	ZYLINDERSCHRAUBE		
70	420001114	44	WASHER ISO 7089 10 A4	SCHEIBE		
71	420001514	12	WASHER ISO 7089 12 A4	SCHEIBE		
72	421300214	4	WASHER DIN 6340 10.5 C35	SCHEIBE		
80	10540494	4	HEX NUT ISO 10511 M10 A4	SECHSKANTMUTTER		

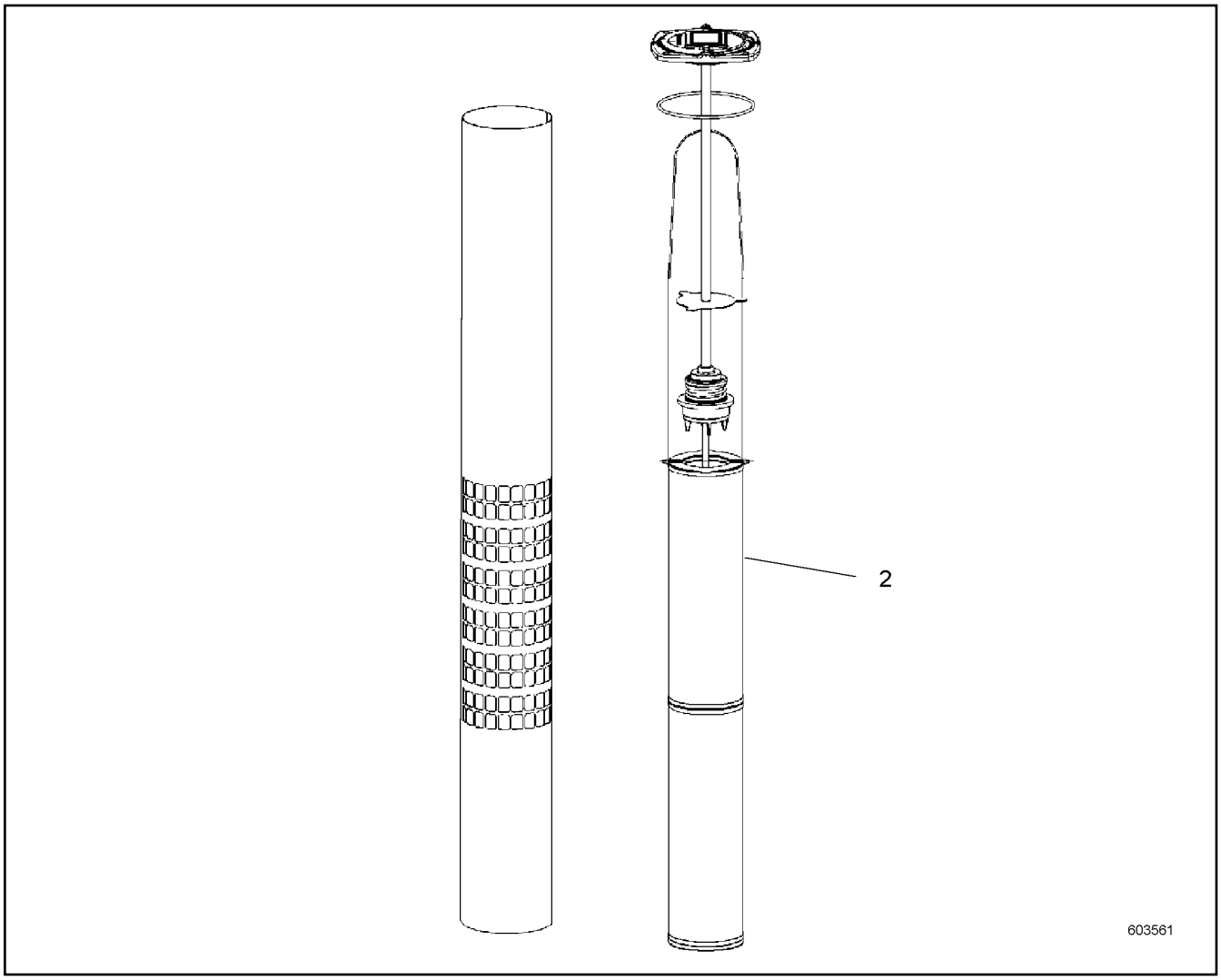

Pos.	Item	Quantity	Description	Bezeichnung	Serie	K
2	11227203	1	FILTER INSERT	FILTEREINSATZ		
3	10218953	1	O-RING	O-RING		

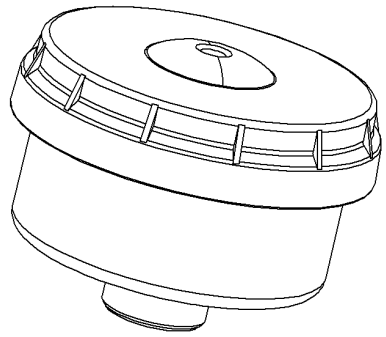

604282

Pos.	Item	Quantity	Description	Bezeichnung	Serie	K
1	510713814	1	FILTER ELEMENT	FILTERELEMENT		

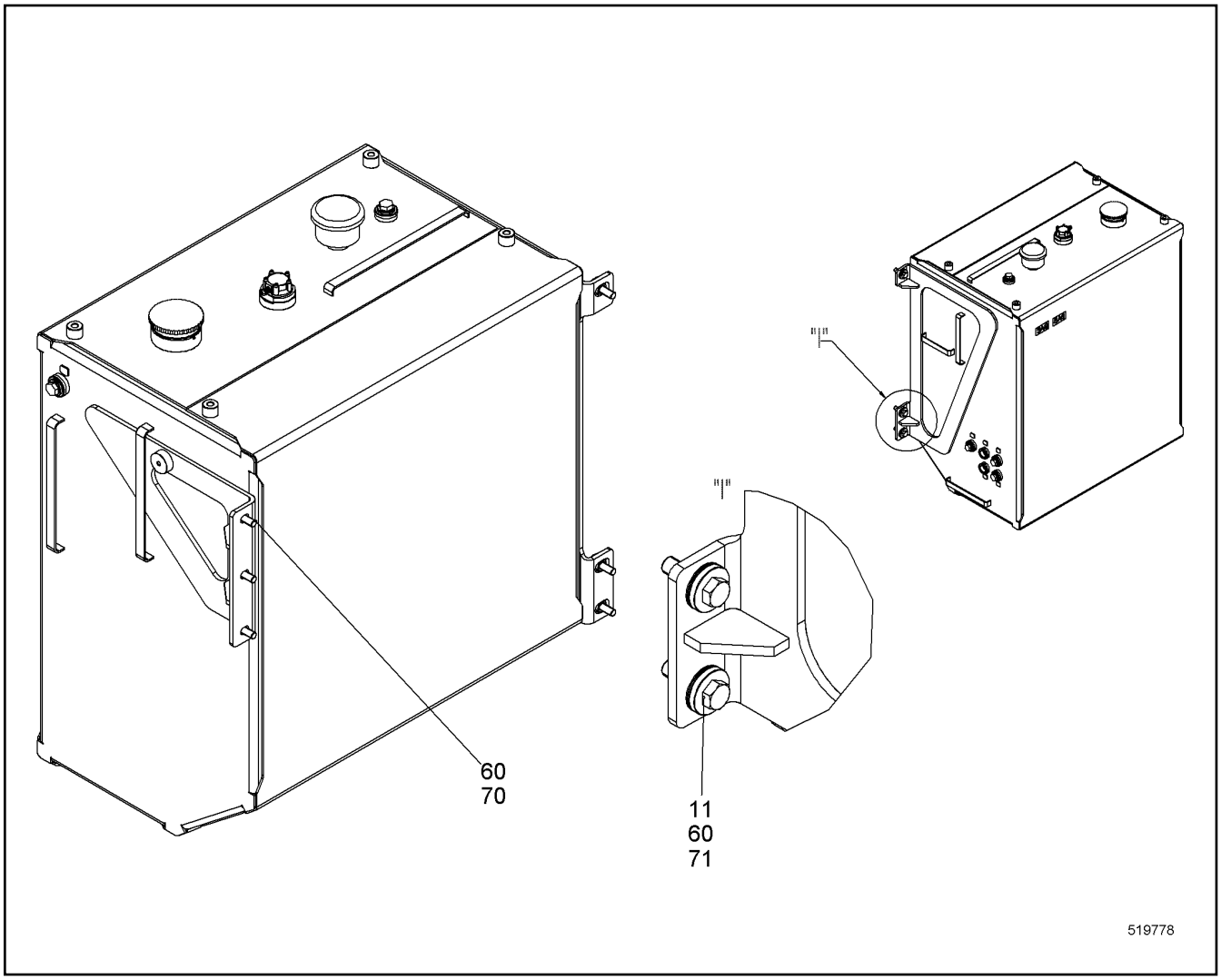

Pos.	Item	Quantity	Description	Bezeichnung	Serie	K
10	10560733	1	FUEL TANK CPL ⇨ ❑ 48	KRAFTSTOFFTANK KPL		
11	959019014	3	BUSHING	BUCHSE		
60	10539317	6	HEX SCREW ISO 4017 M16X35 10.9	SECHSKANTSCHRAUBE		
70	421300414	3	WASHER DIN 6340 17 C35	SCHEIBE		

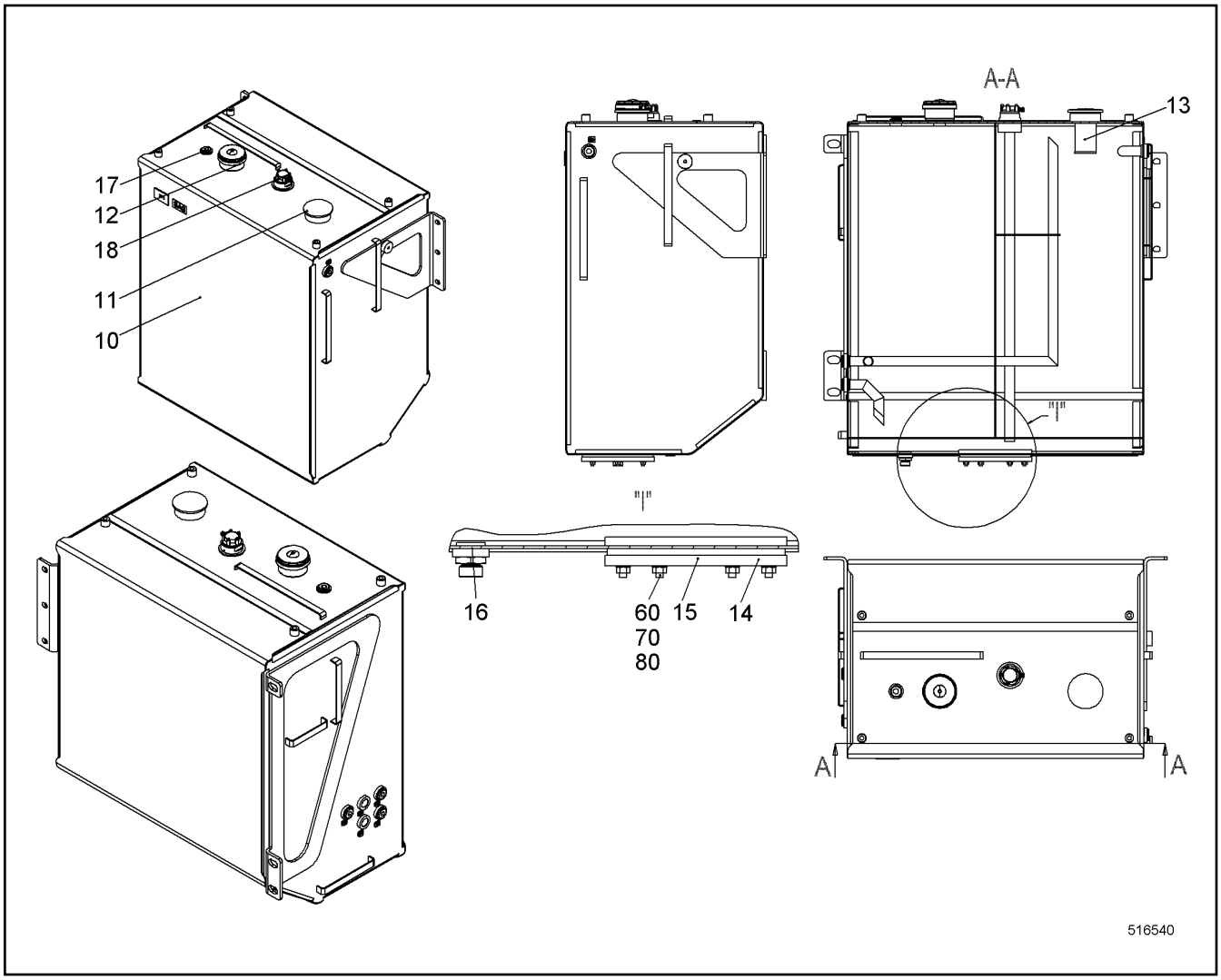

Pos.	Item	Quantity	Description	Bezeichnung	Serie	K
10	10560734	1	FUEL TANK ST.CONST.	KRAFTSTOFFTANK SCHWK		
11	7365412	1	LOCKABLE TANK CAP	TANKVERSCHLUSS		
12	11280868	1	AERATION FILTER	BELUEFTUNGSFILTER		
13	10296919	1	FILLER SIEVE	EINFUELLSIEB		
14	10520927	1	COVER	DECKEL		
15	726401514	1	O-RING	O-RING		
16	403900714	1	OIL DRAIN PLUG G1"X11 MS	OELABLASSSCHRAUBE		
17	477704614	5	FLANGE JOINT	VERSCHRAUBUNG		
18	10528589	1	LEVEL SENSOR	NIVEAUGEBER		
60	4068017	6	DOUBLE-ENDED STUD DIN 939 M10X30 8.8	STIFTSCHRAUBE		
70	420001114	6	WASHER ISO 7089 10 A4	SCHEIBE		
80	411514614	6	HEX NUT ISO 4032 M10 A4-70	SECHSKANTMUTTER		

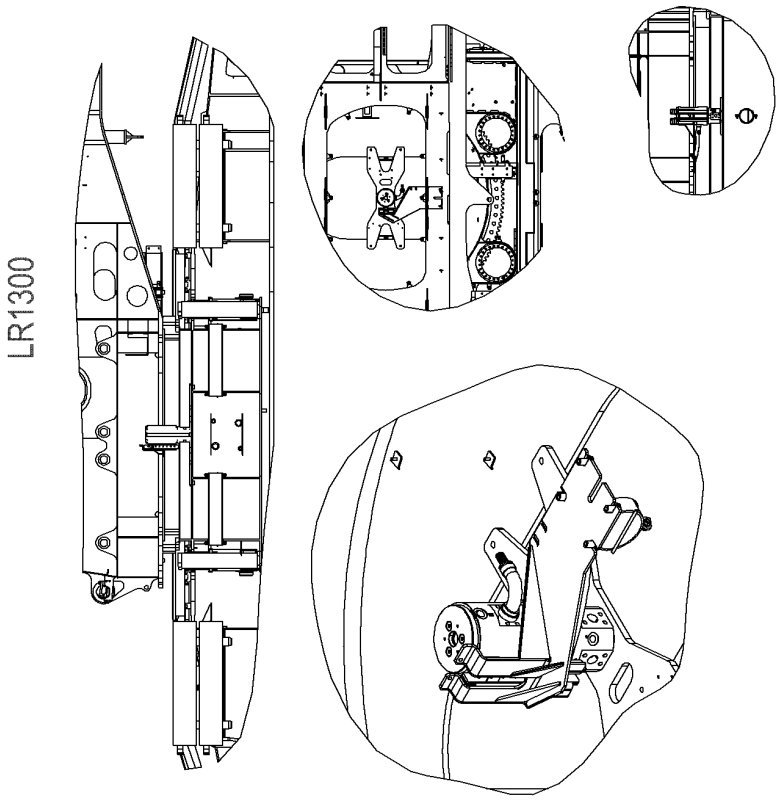
LR1300

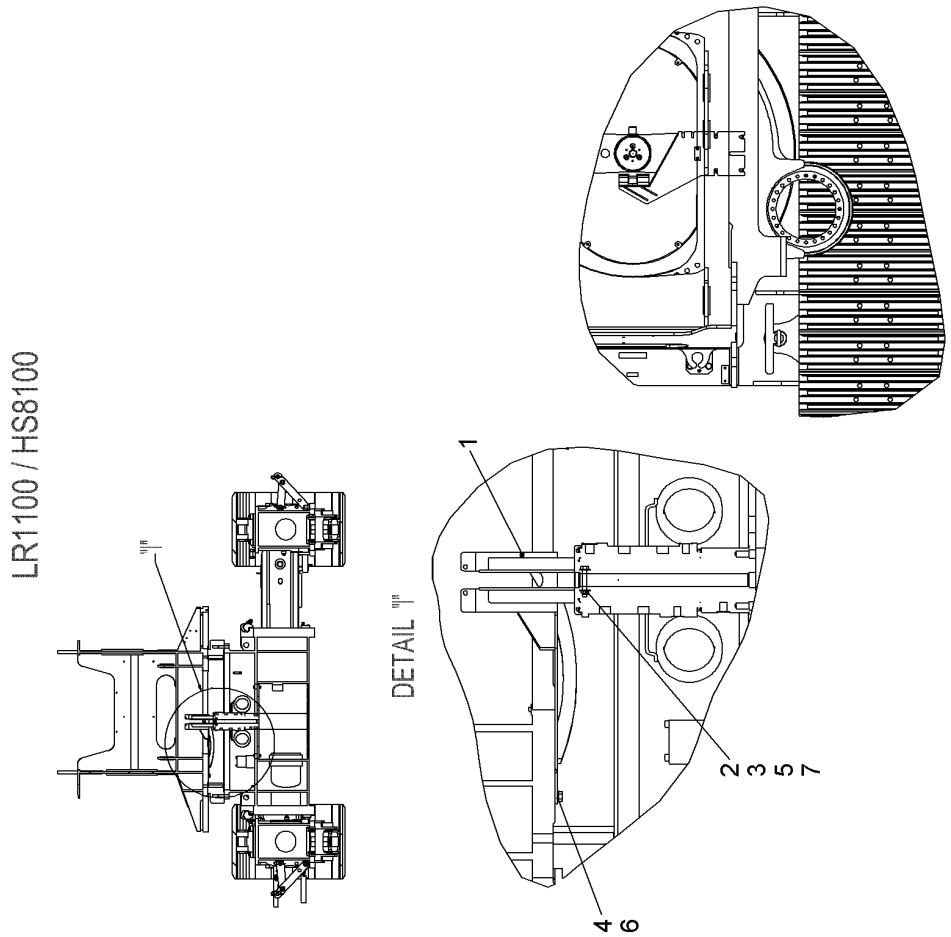
LR1100 / HS8100
DETAIL "I"
1
2
3
5
7
4
6
516892

Pos.	Item	Quantity	Description	Bezeichnung	Serie	K
1	10552306	1	CONSOLE	KONSOLE		
2	10572706	2	WP	WP		
3	406527914	1	HEX SCREW ISO 4017 M10X80 A4-70	SECHSKANTSCHRAUBE		
4	10539316	4	HEX SCREW ISO 4017 M16X30 10.9	SECHSKANTSCHRAUBE		
5	10540494	1	HEX NUT ISO 10511 M10 A4	SECHSKANTMUTTER		
6	10544173	4	WASHER ISO 7093-1 16	SCHEIBE		
7	10540511	2	WASHER ISO 7093-1 10 A4	SCHEIBE		

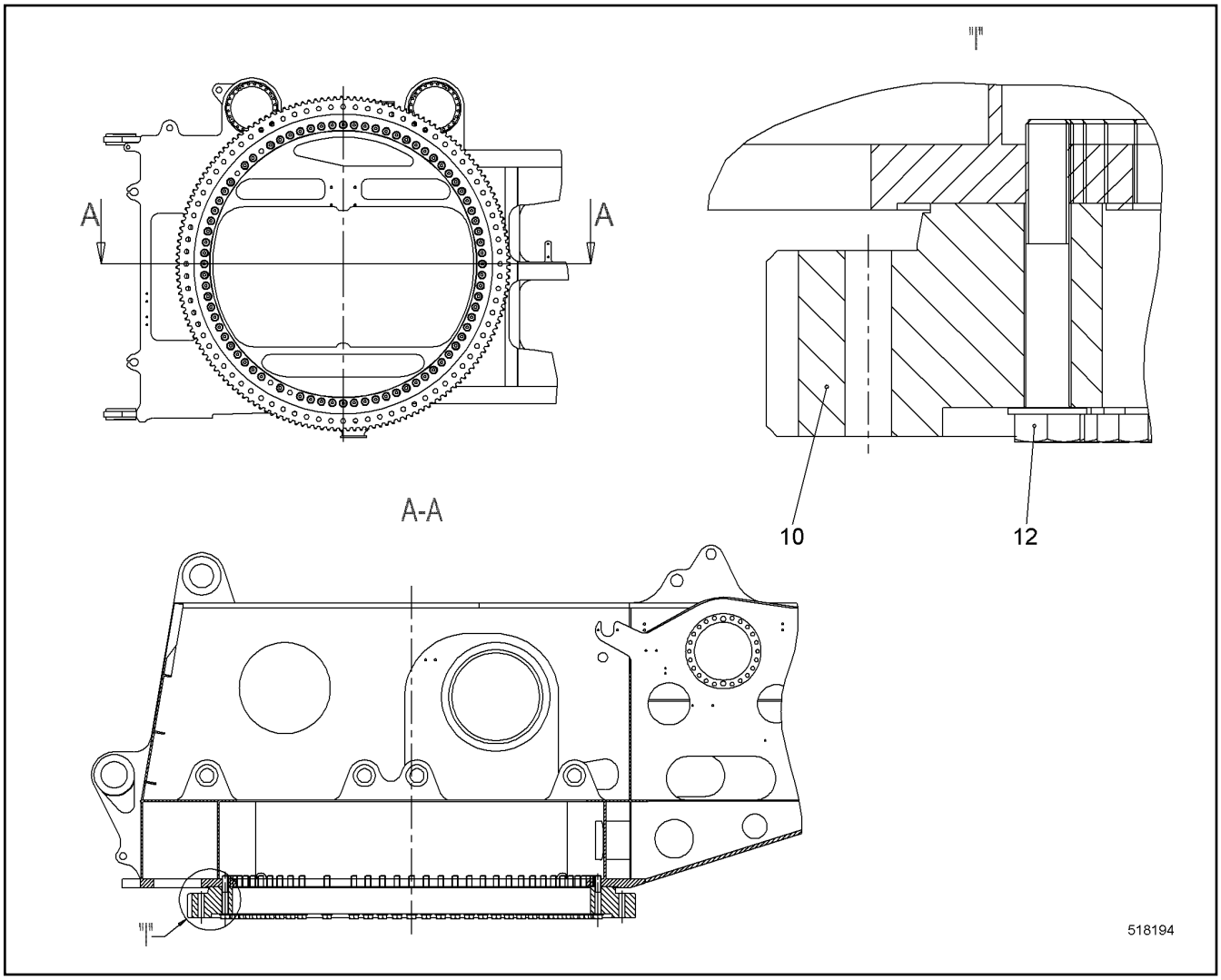

Pos.	Item	Quantity	Description	Bezeichnung	Serie	K
10	990706901	1	SLEW RING ROLLER BEARING	GW-LAGER		
12	11266734	76	FLANGED BOLT M33X220 10.9	BUNDSCHRAUBE		

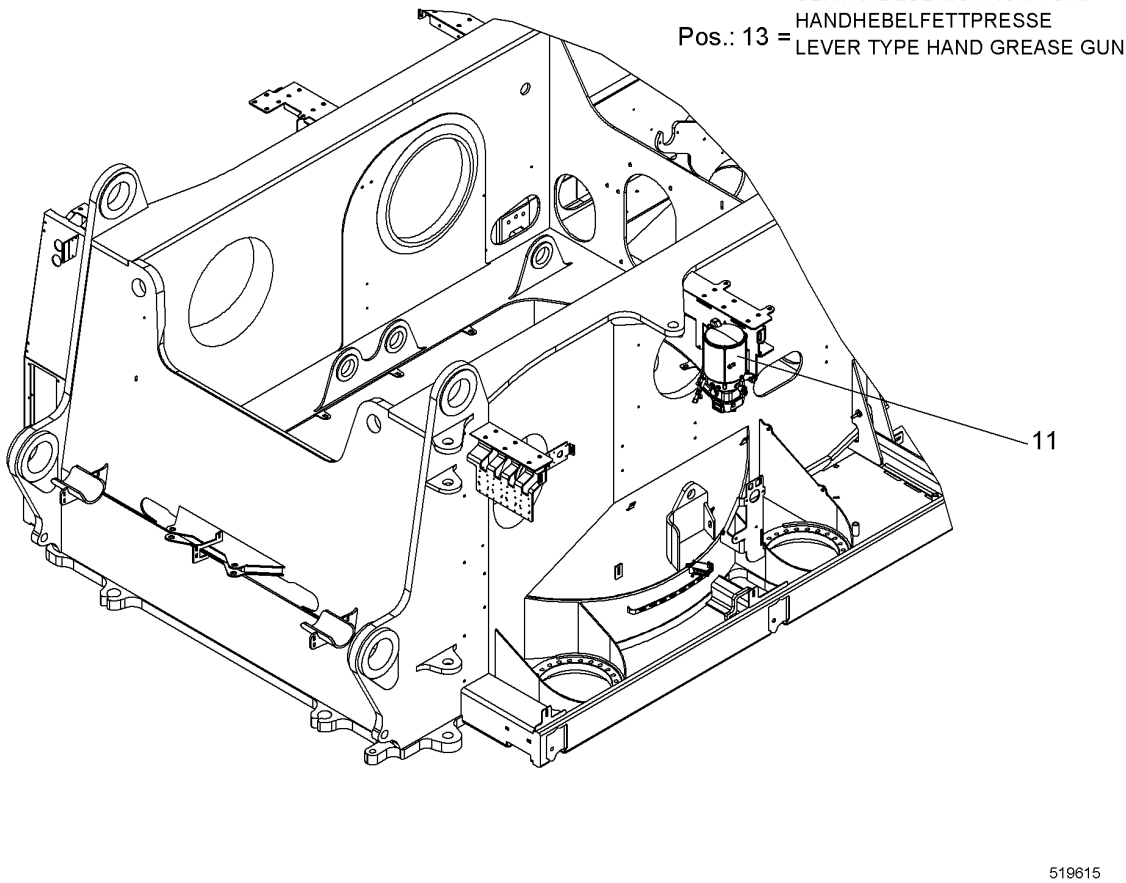

Pos.	Item	Quantity	Description	Bezeichnung	Serie	K
10	11280482	2	CONNECTION PARTS	ANSCHLUSSTEILE		
11	11265572	1	MOUNTING PARTS ⇨ ❑ 53	MONTAGETEILE		
12	11223123	1	CENTRAL LUBRICATION PUMP	ZENTRALSCHMIERPUMPE		
13	10445635	1	LEVER TYPE HAND GREASE GUN	HANDHEBELFETTPRESSE		
14	10448187	1	FILLER NECK CONNECTION	FUELLANSCHLUSS		

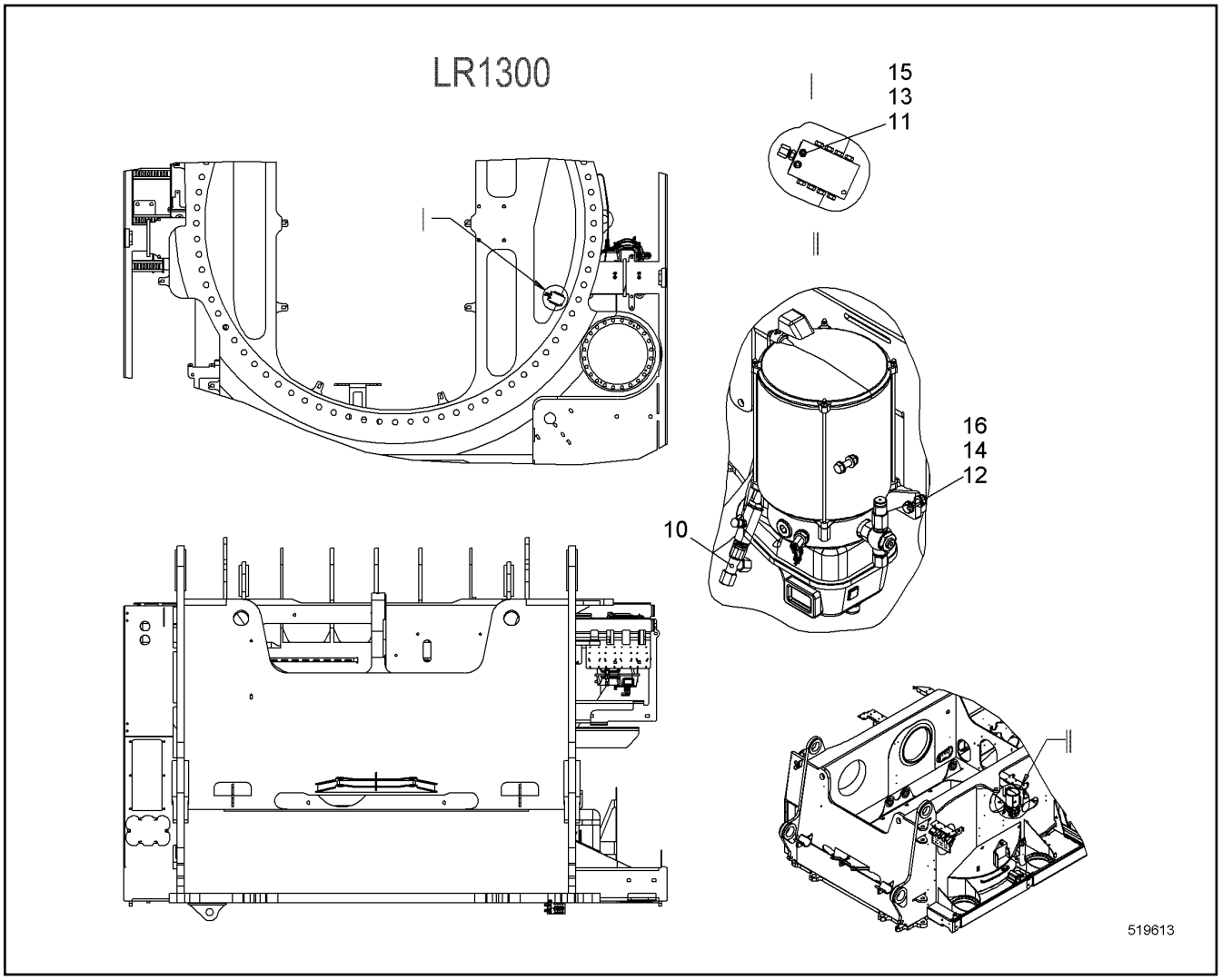

Pos.	Item	Quantity	Description	Bezeichnung	Serie	K
10	11262806	1	FLANGE JOINT	VERSCHRAUBUNG		
12	406501314	2	HEX SCREW ISO 4017 M8X30 A4-70	SECHSKANTSCHRAUBE		
13	420005214	2	WASHER ISO 7089 5 A4	SCHEIBE		
14	420001014	4	WASHER ISO 7089 8 A4	SCHEIBE		
15	10540484	2	HEX NUT ISO 10511 M5 A4	SECHSKANTMUTTER		
16	10540493	2	HEX NUT ISO 10511 M8 A4	SECHSKANTMUTTER		

LIEBHERR

8.7.2015
520296

138281_ETK_001

FIRE EXTINGUISHER MOUNTING
FEUERLOESCHER EINBAU

54 (1/2)

10 57 884 5

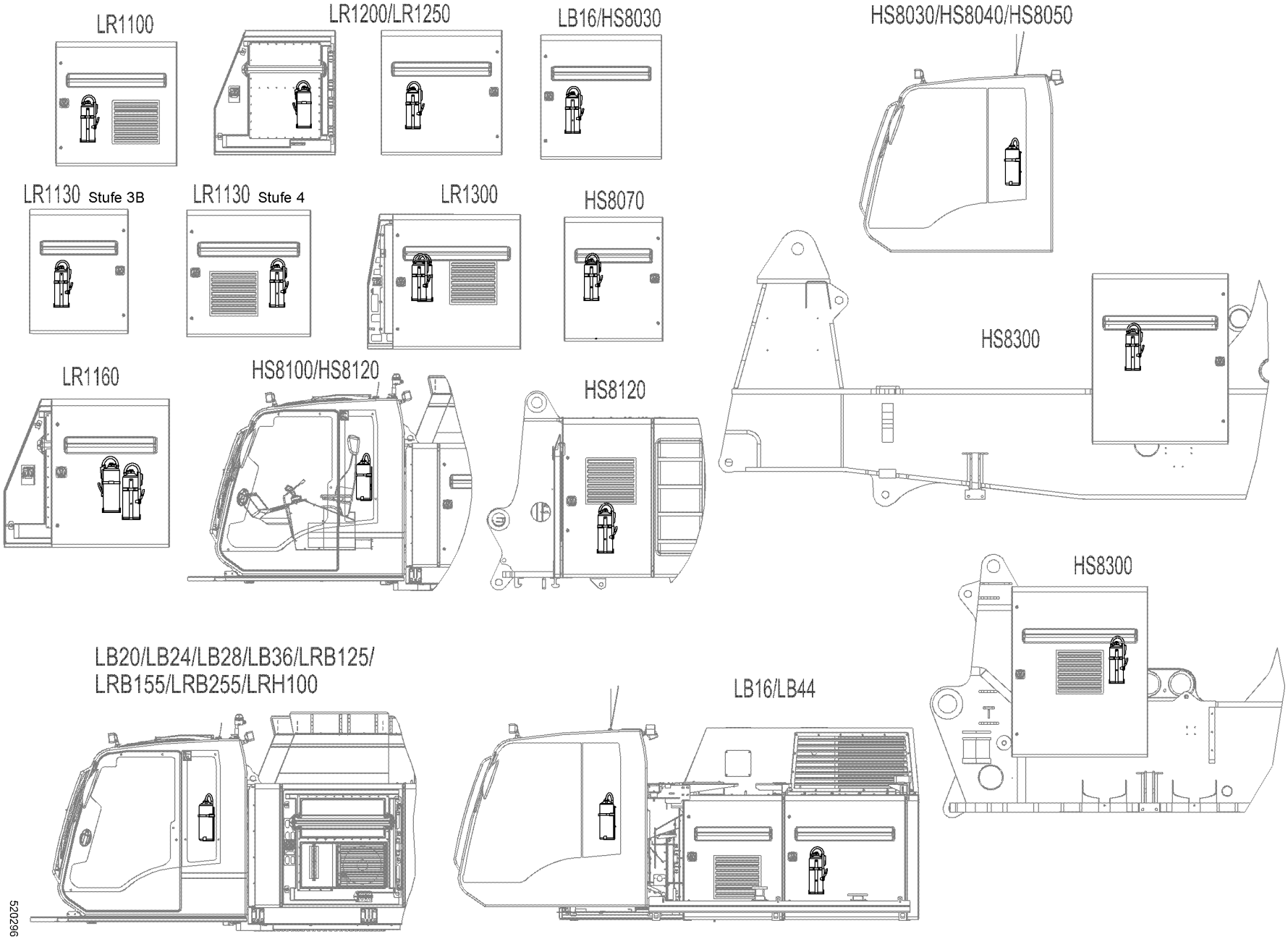

Pos.	Item	Quantity	Description	Bezeichnung	Serie	K
10	926547714	1	FIRE EXTINGUISHER RFK ⇨ ❑ 56	FEUERLOESCHER NRS		

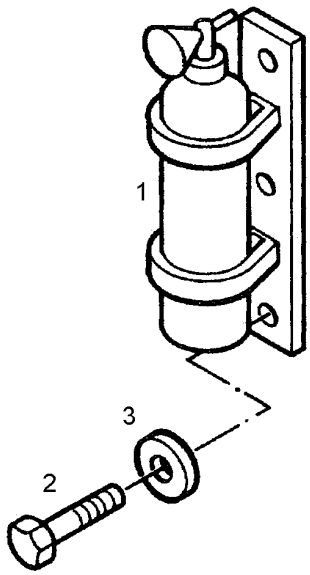

Pos.	Item	Quantity	Description	Bezeichnung	Serie	K
10	890100814	1	FIRE EXTINGUISHER	FEUERLOESCHER		
11	406501514	2	HEX SCREW ISO 4017 M8X16 A4-70	SECHSKANTSCHRAUBE		
12	10540510	2	WASHER ISO 7093-1 8 A4	SCHEIBE		

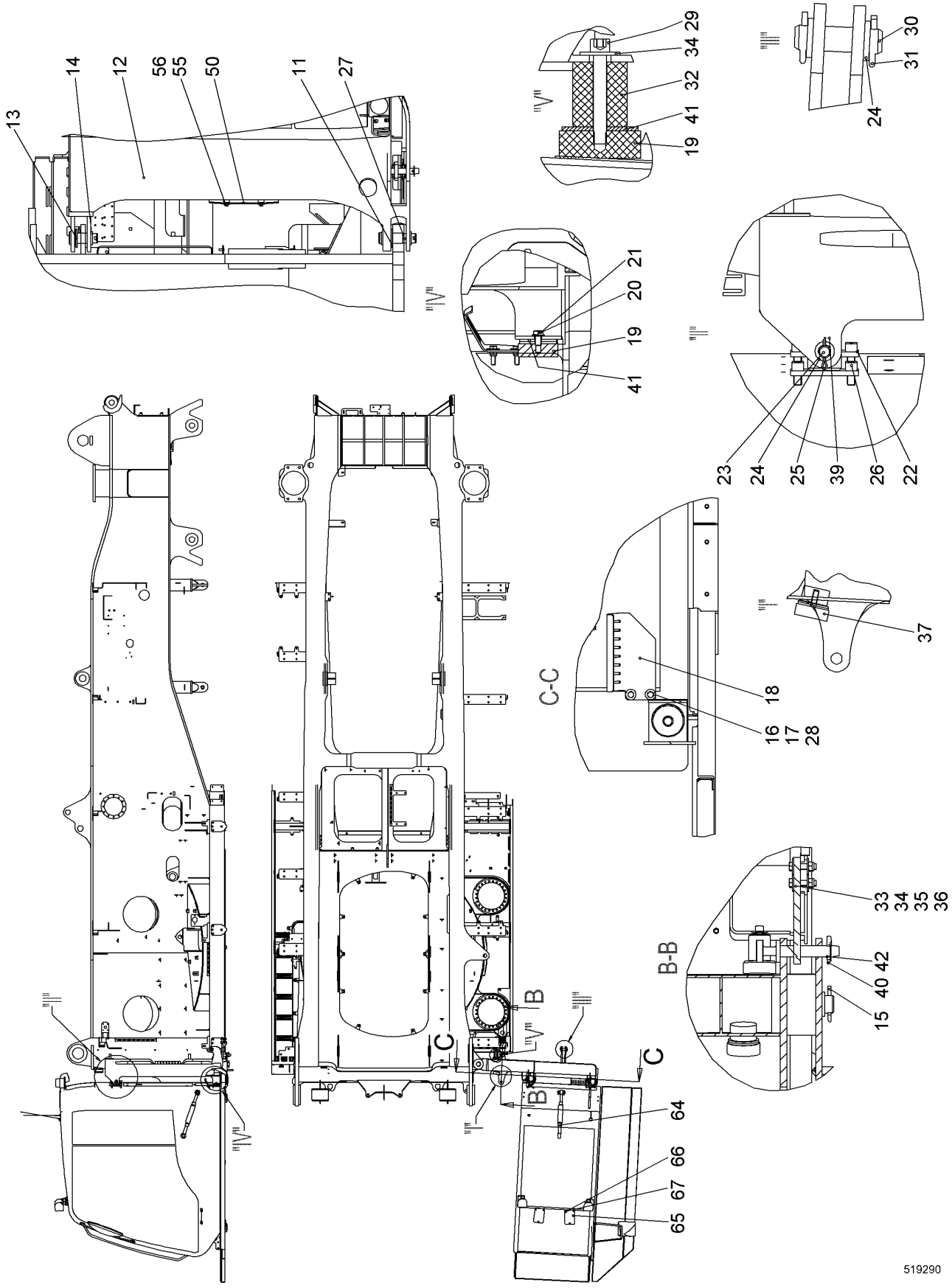
13
14
12
56
55
50
11
27
29
34
32
41
19
30
31
24
21
20
19
41
23
24
25
39
26
22
C-C
18
16
17
28
37
B-B
33
34
35
36
42
40
15
B
C
64
66
67
65
519290

Pos.	Item	Quantity	Description	Bezeichnung	Serie	K
11	790519814	2	COLLER BUSHING 40/80X51 CUSN7ZNPB	BUNDBUCHSE		
12	10578321	1	FRAME ST.CONST.	RAHMEN SCHWK		
13	451436614	1	PIN DIN EN 22341-B 40H11X115X102 X20CR1	BOLZEN		
14	421103014	3	WASHER DIN EN 28738 40 ST	SCHEIBE		
15	433009114	2	SPLIT PIN ISO 1234 8X63 A4	SPLINT		
16	10540510	4	WASHER ISO 7093-1 8 A4	SCHEIBE		
17	10540493	2	HEX NUT ISO 10511 M8 A4	SECHSKANTMUTTER		
18	10588168	1	FASTENER	HALTERUNG		
19	726910114	3	RUBBER MOUNT	LAGER GUMMI		
20	420001514	2	WASHER ISO 7089 12 A4	SCHEIBE		
21	406517714	2	HEX SCREW ISO 4017 M12X20 A4-70	SECHSKANTSCHRAUBE		
22	918585114	2	CONSOLE	KONSOLE		
23	485501714	2	PIN DIN EN 22340-B 25F7X120 42CRMO4+QT;E	BOLZEN		
24	421102214	8	WASHER DIN EN 28738 26 ST;	SCHEIBE		
25	433007708	4	SPLIT PIN ISO 1234 6.3X45	SPLINT		
26	10544065	8	SOCKET HEAD SCREW ISO 4762 M16X30 10.9	ZYLINDERSCHRAUBE		
27	968523914	1	PIN	BOLZEN		
28	406501314	2	HEX SCREW ISO 4017 M8X30 A4-70	SECHSKANTSCHRAUBE		
29	10539524	1	SOCKET HEAD SCREW ISO 4762 M12X85 A4-7	ZYLINDERSCHRAUBE		
30	450052114	2	PIN DIN EN 22340-B 25F8X88 LHRD900-40;100	BOLZEN		
31	433007508	4	SPLIT PIN ISO 1234 6.3X32 ST	SPLINT		
32	11216088	1	SPACER PIECE	DISTANZSTUECK		
33	10578343	1	MOUNTING BRACKET	BEFESTIGUNGSBUEGEL		
34	10540512	9	WASHER ISO 7093-1 12 A4	SCHEIBE		
35	406527614	4	HEX SCREW ISO 4017 M12X55 A4-70	SECHSKANTSCHRAUBE		
36	10540495	4	HEX NUT ISO 10511 M12 A4	SECHSKANTMUTTER		
37	726904014	1	RUBBER MOUNT	LAGER GUMMI		
39	790212314	2	BUSHING 25/40X56	BUCHSE		
40	432016214	1	SAFETY PLUG W HINGE-LID 8X42	SICHERHEITSKLAPPSTECKER		
42	11301479	1	PIN	BOLZEN		
50	10586253	1	WP	WP		
55	10540511	4	WASHER ISO 7093-1 10 A4	SCHEIBE		
56	406518714	4	HEX SCREW ISO 4017 M10X20 A4-70	SECHSKANTSCHRAUBE		
64	790306414	1	TURNBUCKLE	SPANNSCHLOSS		
65	385072014	2	COVER	DECKEL		
66	406501514	6	HEX SCREW ISO 4017 M8X16 A4-70	SECHSKANTSCHRAUBE		
67	420001014	6	WASHER ISO 7089 8 A4	SCHEIBE		

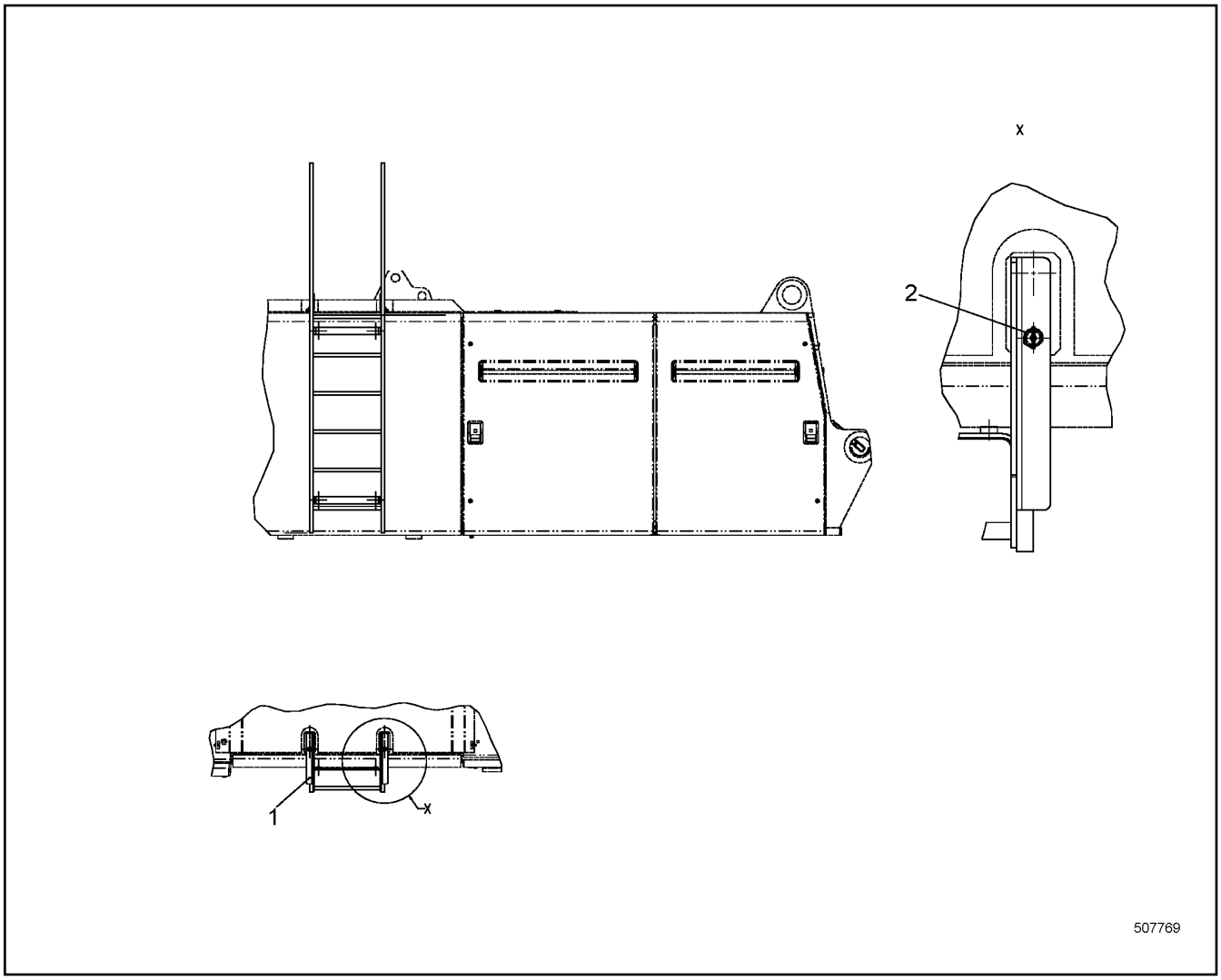

Pos.	Item	Quantity	Description	Bezeichnung	Serie	K
1	10226190	1	LADDER CPL	LEITER KPL		
2	485565814	2	SAFETY PLUG W HINGE-LID 4X27	SICHERHEITSKLAPPSTECKER		

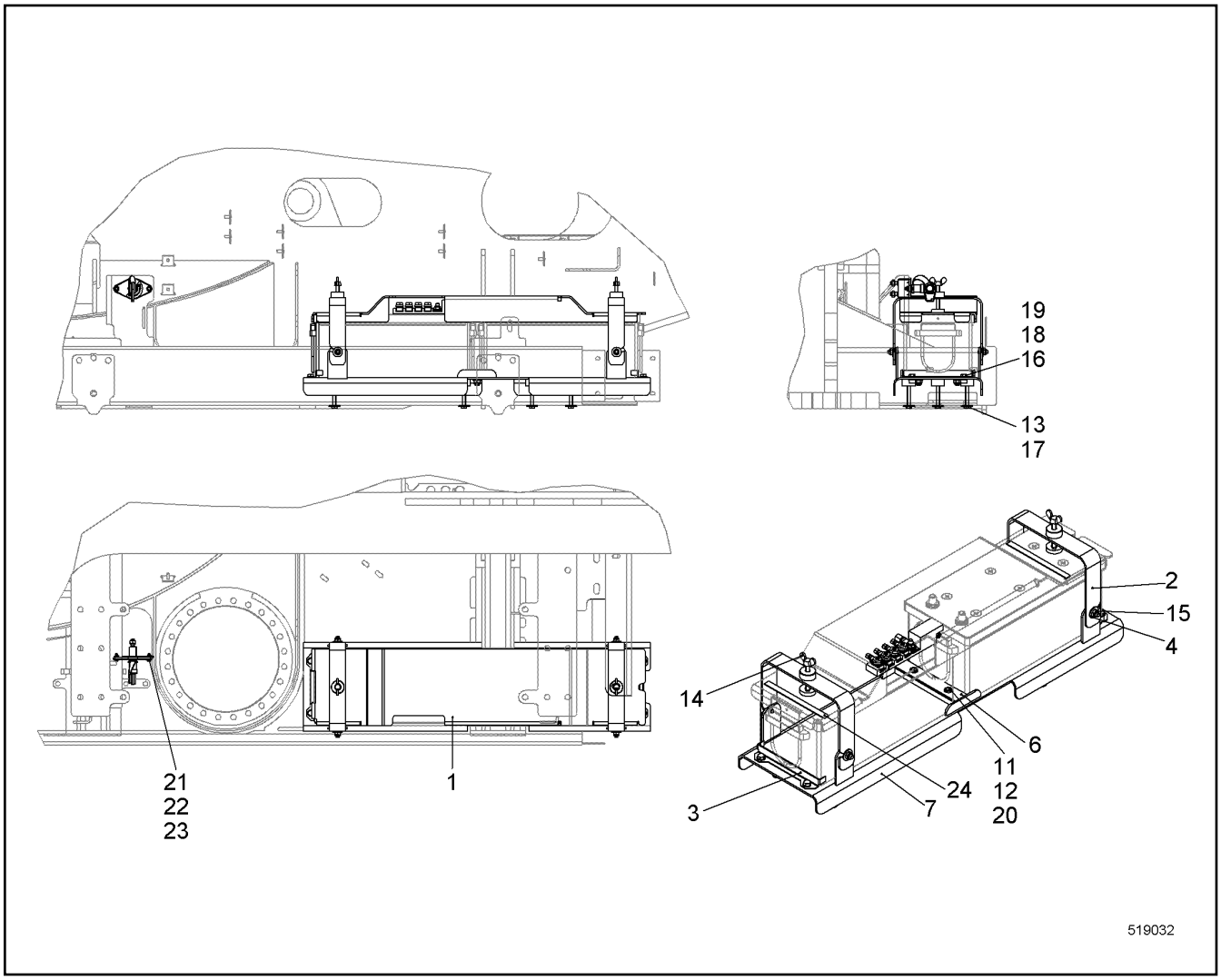

Pos.	Item	Quantity	Description	Bezeichnung	Serie	K
1	10560674	1	BATTERY COVER	BATTERIEABDECKUNG		
2	10597981	2	BRACKET	BUEGEL		
3	10509133	2	CLAMPING BRACKET	KLEMMBUEGEL		
4	10540511	4	WASHER ISO 7093-1 10 A4	SCHEIBE		
6	948282314	1	STRIP	LEISTE		
7	10579979	1	CONSOLE	KONSOLE		
11	420001514	2	WASHER ISO 7089 12 A4	SCHEIBE		
12	485555314	2	SOCKET HEAD SCREW ISO 4762 M12X35 A4-7	ZYLINDERSCHRAUBE		
13	420600408	6	WASHER DIN 440 R11 ST	SCHEIBE		
14	485559814	2	WING SCREW DIN 316 M10X80 4.6	FLUEGELSCHRAUBE		
15	10540494	4	HEX NUT ISO 10511 M10 A4	SECHSKANTMUTTER		
16	406518714	4	HEX SCREW ISO 4017 M10X20 A4-70	SECHSKANTSCHRAUBE		
17	10539293	6	HEX SCREW ISO 4017 M10X75 A4-70	SECHSKANTSCHRAUBE		
18	420001114	4	WASHER ISO 7089 10 A4	SCHEIBE		
19	485550014	4	CAGE NUT M10-RR-140-62	KAEFIGMUTTER		
20	10540495	2	HEX NUT ISO 10511 M12 A4	SECHSKANTMUTTER		
21	10540484	2	HEX NUT ISO 10511 M5 A4	SECHSKANTMUTTER		
22	406501814	2	HEX SCREW ISO 4017 M5X20 A4-70	SECHSKANTSCHRAUBE		
23	485570714	4	WASHER ISO 7093-1 5 A4	SCHEIBE		
24	262107814	6	CELL RUBBER	ZELLGUMMI		

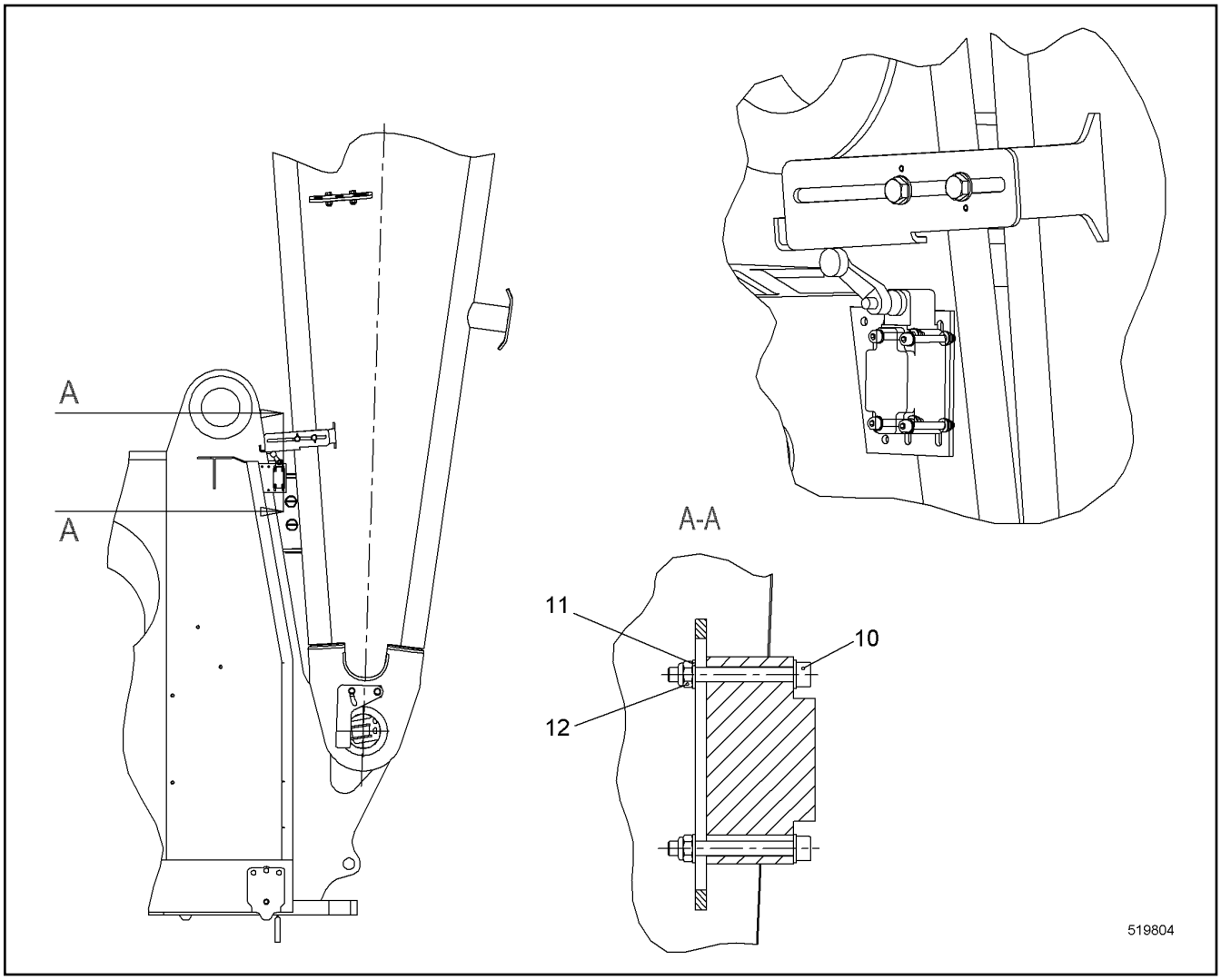

Pos.	Item	Quantity	Description	Bezeichnung	Serie	K
10	404214114	4	SOCKET HEAD SCREW ISO 4762 M5X45 10.9	ZYLINDERSCHRAUBE		
11	420005214	8	WASHER ISO 7089 5 A4	SCHEIBE		
12	10540484	4	HEX NUT ISO 10511 M5 A4	SECHSKANTMUTTER		

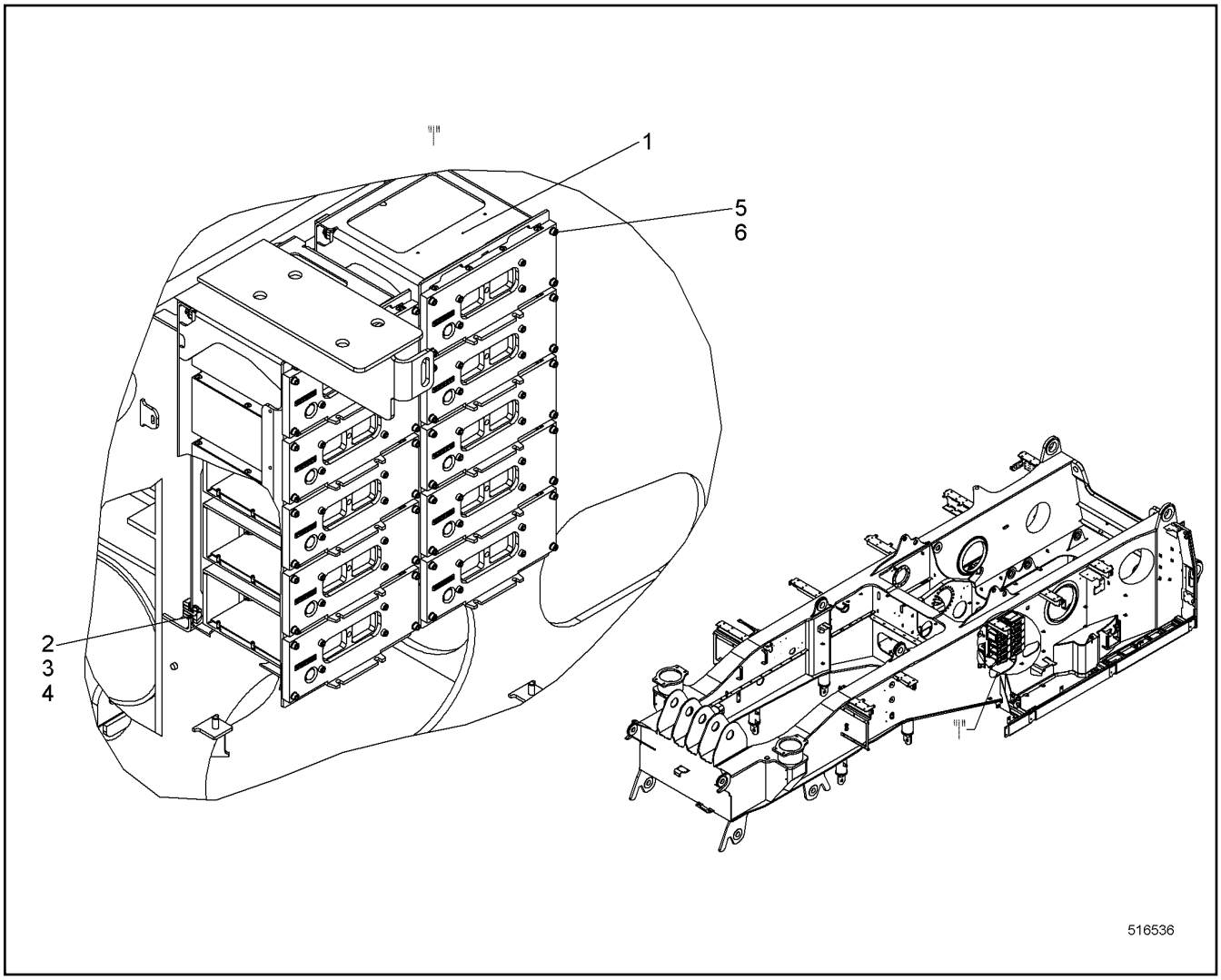

Pos.	Item	Quantity	Description	Bezeichnung	Serie	K
1	916793914	2	MODULE ASSEMBLY GROUP CARRIER	MODULBAUGRUPPENTRAEGER		
2	485549914	8	CAGE NUT M10-RR-140-47	KAEFIGMUTTER		
3	406527414	8	HEX SCREW ISO 4017 M10X18 A4-70	SECHSKANTSCHRAUBE		
4	420001114	8	WASHER ISO 7089 10 A4	SCHEIBE		
5	420005214	40	WASHER ISO 7089 5 A4	SCHEIBE		
6	10278936	40	SOCKET HEAD SCREW ISO 4762 M5X20 A4-7	ZYLINDERSCHRAUBE		

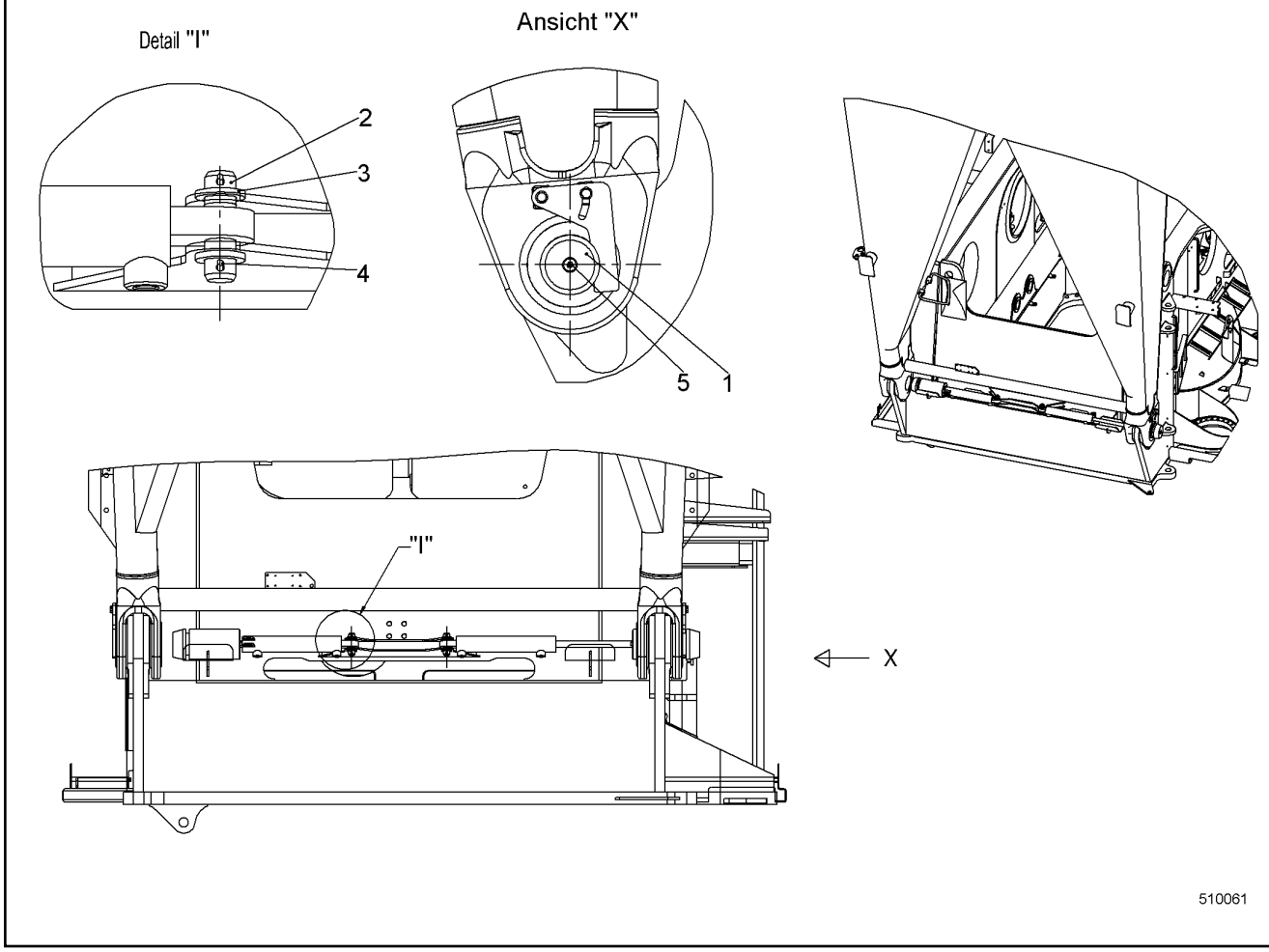

Pos.	Item	Quantity	Description	Bezeichnung	Serie	K
1	959712214	2	PIN 120X270 35NICRMOV125	BOLZEN		
2	450052114	2	PIN DIN EN 22340-B 25F8X88 LHRD900-40;100	BOLZEN		
3	421102214	4	WASHER DIN EN 28738 26 ST;	SCHEIBE		
4	433006614	4	SPLIT PIN ISO 1234 5X45	SPLINT		
5	7743242	2	HYDRAULIC-TYPE LUBRICAT.NIPPLE	KEGELSCHMIERNIPPEL		

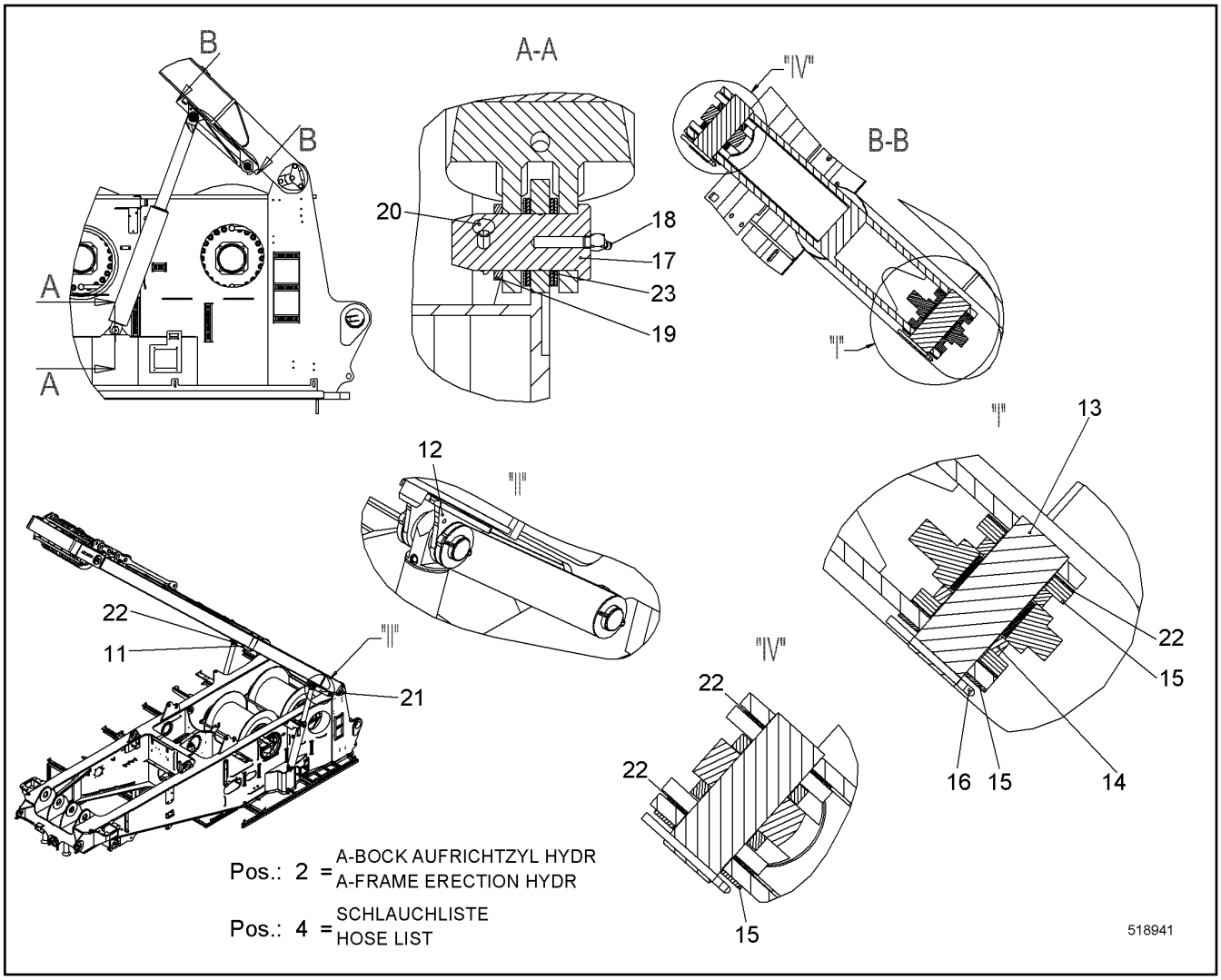

Pos.	Item	Quantity	Description	Bezeichnung	Serie	K
2	10519695	1	A-FRAME ERECTION HYDR ⇨ ❑ 65	A-BOCK AUFRICHTZYL HYDR		
4	10545451	1	HOSE LIST ⇨ ❑ 69	SCHLAUCHLISTE		
11	11235361	1	MOUNTING LINK LEFT CPL	LASCHE LI KPL		
12	10533999	2	ROCKER ST.CONST.	WIPPE SCHWK		
13	10534039	4	PIN 50X138 LHRD900-40;10019758	BOLZEN		
14	10534042	8	BUSHING 51/70X13.5 POLYAMID	BUCHSE		
15	949740514	20	WASHER 52/92X3 PA 6 G	SCHEIBE		
16	433008214	4	SPLIT PIN ISO 1234 6.3X71 A4	SPLINT		
17	950663614	2	PIN 60X110 LHRD750-30;10019758	BOLZEN		
18	7001228	2	HYDRAULIC-TYPE LUBRICAT.NIPPLE	KEGELSCHMIERNIPPEL		
19	421103214	2	WASHER DIN EN 28738 45 ST;	SCHEIBE		
20	433010314	2	SPLIT PIN ISO 1234 10X80 A4	SPLINT		
21	11235382	1	MOUNTING LINK RIGHT CPL	LASCHE RE KPL		
22	11241005	16	WASHER 52/92X1 PA 6 G	SCHEIBE		
23	10593096	8	WASHER 46/70X2 POLYAMID	SCHEIBE		

LIEBHERR

8.7.2015
517862

138281_ETK_001

A-FRAME ERECTION HYDR
A-BOCK AUFRICHTZYL HYDR

65 (1/2)

10 51 969 5

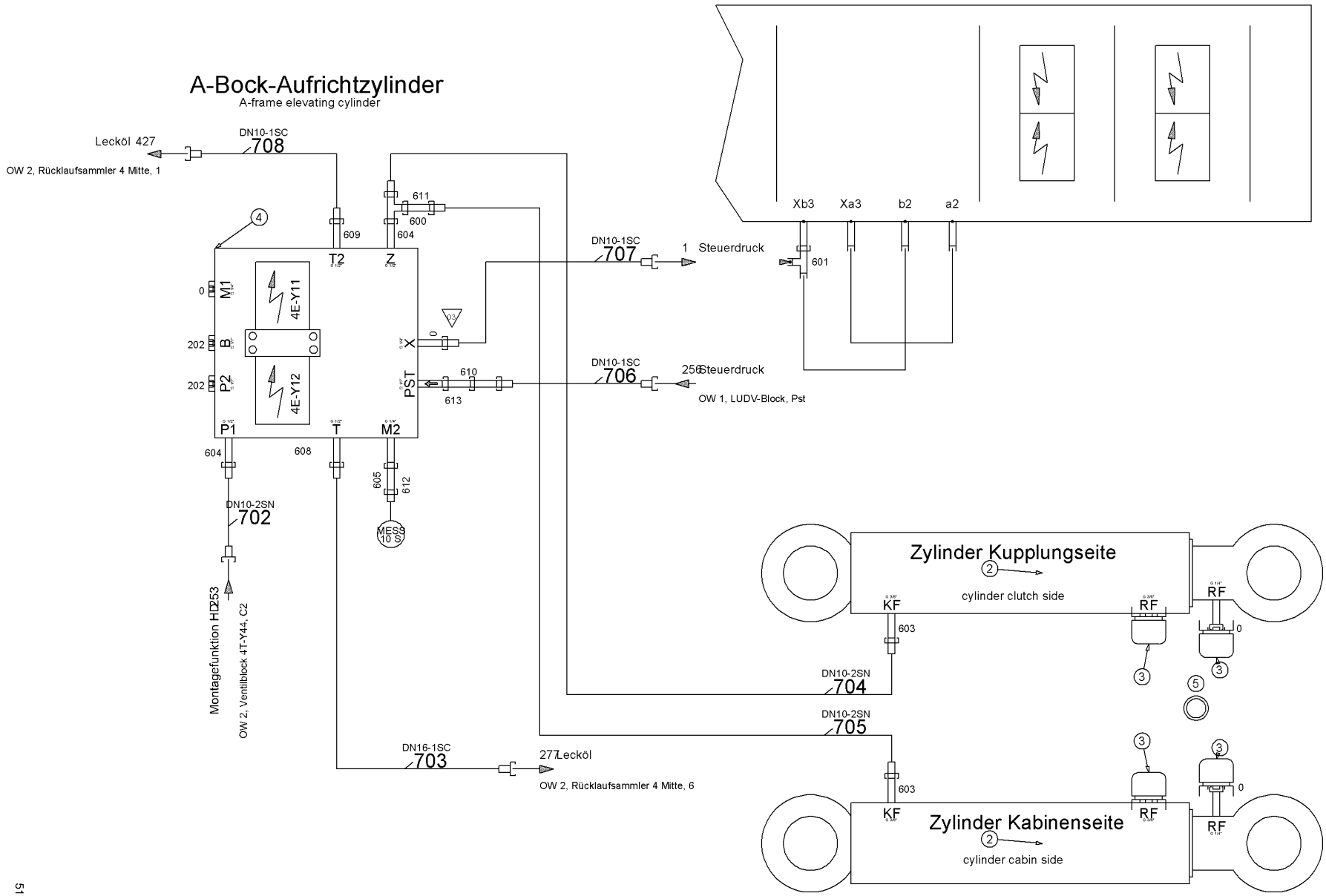

517862

Pos.	Item	Quantity	Description	Bezeichnung	Serie	K
2	592104114	2	DOUBLE-ACTING CYL ⇨ ❑ 67	DOPPELWIRKZYL		
3	540136314	4	VENTILATION VALVE	ENTLUEFTUNGSVENTIL		
4	10225408	1	VALVE BLOCK ⇨ ❑ 68	VENTILBLOCK		
5	710103814	4	SEALING RING	DICHTRING		
201	510694514	2	GAUGE CONNECTION	MESSSTUTZEN		
202	247112702	2	FLANGE JOINT	VERSCHRAUBUNG		
600	7617461	1	FLANGE JOINT	VERSCHRAUBUNG		
603	471032708	2	FLANGE JOINT	VERSCHRAUBUNG		
604	471032608	2	FLANGE JOINT	VERSCHRAUBUNG		
605	471004514	1	FLANGE JOINT	VERSCHRAUBUNG		
608	247009702	1	FLANGE JOINT	VERSCHRAUBUNG		
609	247009402	1	FLANGE JOINT	VERSCHRAUBUNG		
610	485433514	1	FLANGE JOINT	VERSCHRAUBUNG		
611	7617354	1	FLANGE JOINT	VERSCHRAUBUNG		
612	7617268	1	FLANGE JOINT	VERSCHRAUBUNG		
613	7617460	1	FLANGE JOINT	VERSCHRAUBUNG		
614	471030608	1	FLANGE JOINT	VERSCHRAUBUNG		
615	247043202	2	FLANGE JOINT	VERSCHRAUBUNG		
616	247117302	1	FLANGE JOINT	VERSCHRAUBUNG		

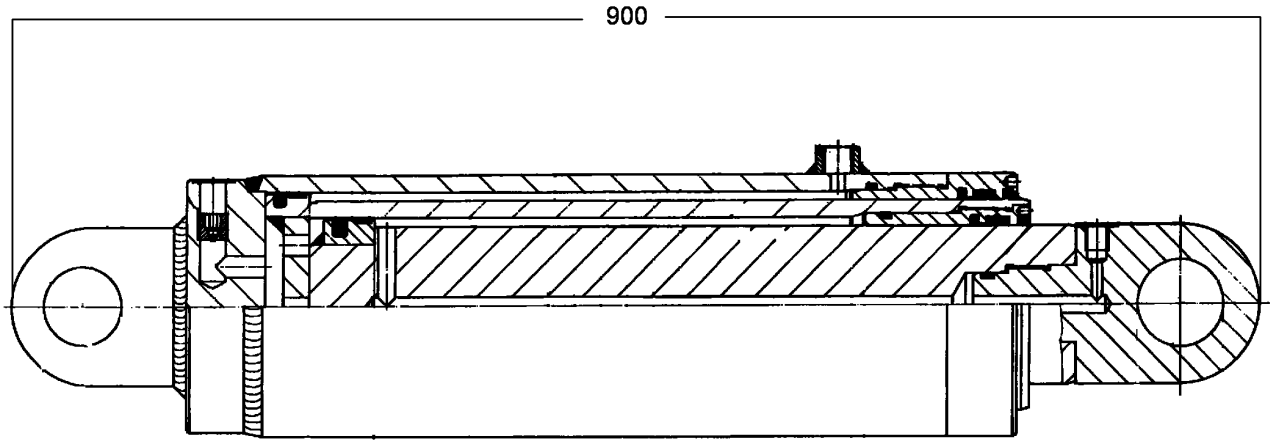

602144

Pos.	Item	Quantity	Description	Bezeichnung	Serie	K
19	10504737	1	BUSHING 50/60X35 CUZN25AL5	BUCHSE		
27	11249191	1	NOZZLE	DUESE		
900	790407714	1	SEALING SET CPL CYL	DS KPL ZYL		

OHNE BILD
WITHOUT ILLUSTRATION
SANS PLANCHE
SIN FIG.
SEM ILUSTRAÇÃO
БЕЗ ИЗОБРАЖЕНИЯ

600000

Pos.	Item	Quantity	Description	Bezeichnung	Serie	K
1	11233727	1	DIRECTIONAL CONTROL VALVE	WEGEVENTIL		
2	10350546	1	PRESSURE LIMITING VALVE	DRUCKBEGRENZUNGSVENTIL		
3	11233729	2	NON-RETURN VALVE	RUECKSCHLAGVENTIL		
4	11233730	1	FLOW REGULATING CHECK VALVE	DROSSELRUECKSCHLAGVENTIL		
5	11233731	1	PRESSURE LIMITING VALVE	DRUCKBEGRENZUNGSVENTIL		
6	11233731	1	PRESSURE LIMITING VALVE	DRUCKBEGRENZUNGSVENTIL		
7	11233732	1	NOZZLE	DUESE		
9	11233742	1	NON-RETURN VALVE	RUECKSCHLAGVENTIL		
10	11233749	1	NON-RETURN VALVE	RUECKSCHLAGVENTIL		
11	11233751	1	NON-RETURN VALVE	RUECKSCHLAGVENTIL		

ACHTUNG !
ATTENTION !
ATTENTION !
ATENCIÓN !
ATENÇÃO !
ВНИМАНИЕ

Für Schlauchbestellungen kann über die Schlauchnummer, in der entsprechenden Schlauchliste, die Identnummer festgestellt werden.

For ordering flexible hoses you can find the identification number through the hose-number in the corresponding hose-list.

Pour des ordres de tuyau flexible le nombre d'identification on voit dans la liste de tuyau flexible correspondente.

Para el pedido de manguera, indicar el número de identificación de la manguera de la lista respectiva.

Para se encomendar uma mangueira, consulte o número de identificaçao na respectiva lista de mangueiras.

Для оформления заказов на шланги/рукавы идент. № может быть определен при помощи номера шланга/рукава, указанного в соотетствующем перечне шлангов/рукавов.

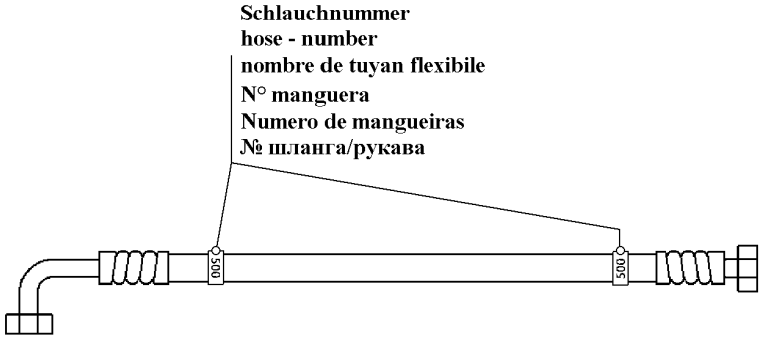

500000

Pos.	Item	Quantity	Description	Bezeichnung	Serie	K
702	928137714	1	HOSE CPL	SCHLAUCH KPL		
703	928591114	1	HOSE CPL	SCHLAUCH KPL		
704	928538414	1	HOSE CPL	SCHLAUCH KPL		
705	929376814	1	HOSE CPL	SCHLAUCH KPL		
706	919791614	1	HOSE CPL	SCHLAUCH KPL		
707	918805114	1	HOSE CPL	SCHLAUCH KPL		
708	919127514	1	HOSE CPL	SCHLAUCH KPL		

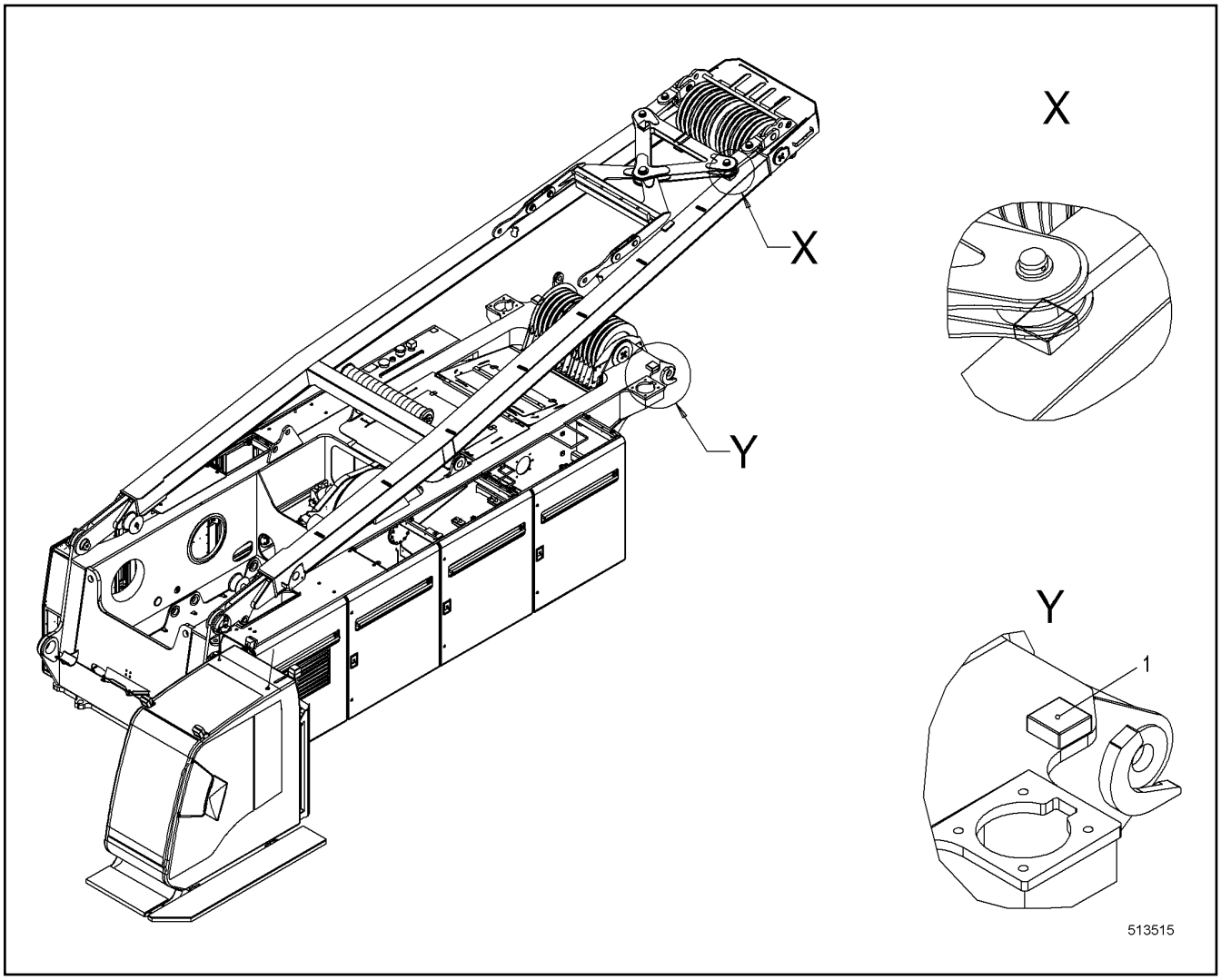

Pos.	Item	Quantity	Description	Bezeichnung	Serie	K
1	10098143	2	BASE PLATE	AUFLAGEPLATTE		

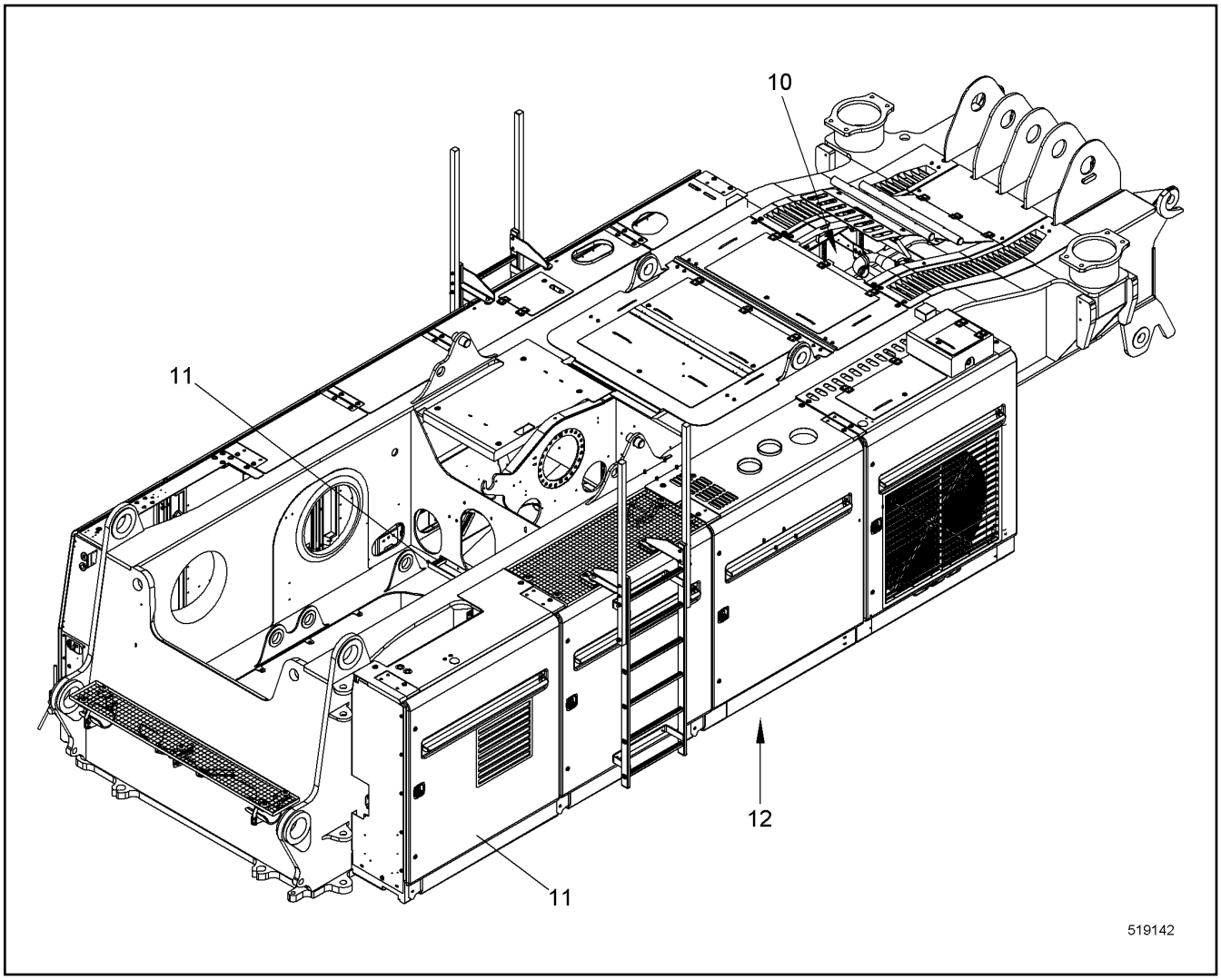

Pos.	Item	Quantity	Description	Bezeichnung	Serie	K
10	11240480	1	CENTRAL POWER UNIT ⇨ ❑ 72	ZENTRALAGGREGAT		
11	11244090	1	PANELLING SUPERSTR. INSTAL.CPL ⇨ ❑ 281	VERKLEIDUNG OW EINBAU KPL		
12	11249222	1	COVER UNDERSIDE ⇨ ❑ 299	ABDECKUNG UNTERSEITE		
14	11244837	1	MOUNTING PARTS SUPERSTRUCTURE ⇨ ❑ 301	BEF-TEILE OW		

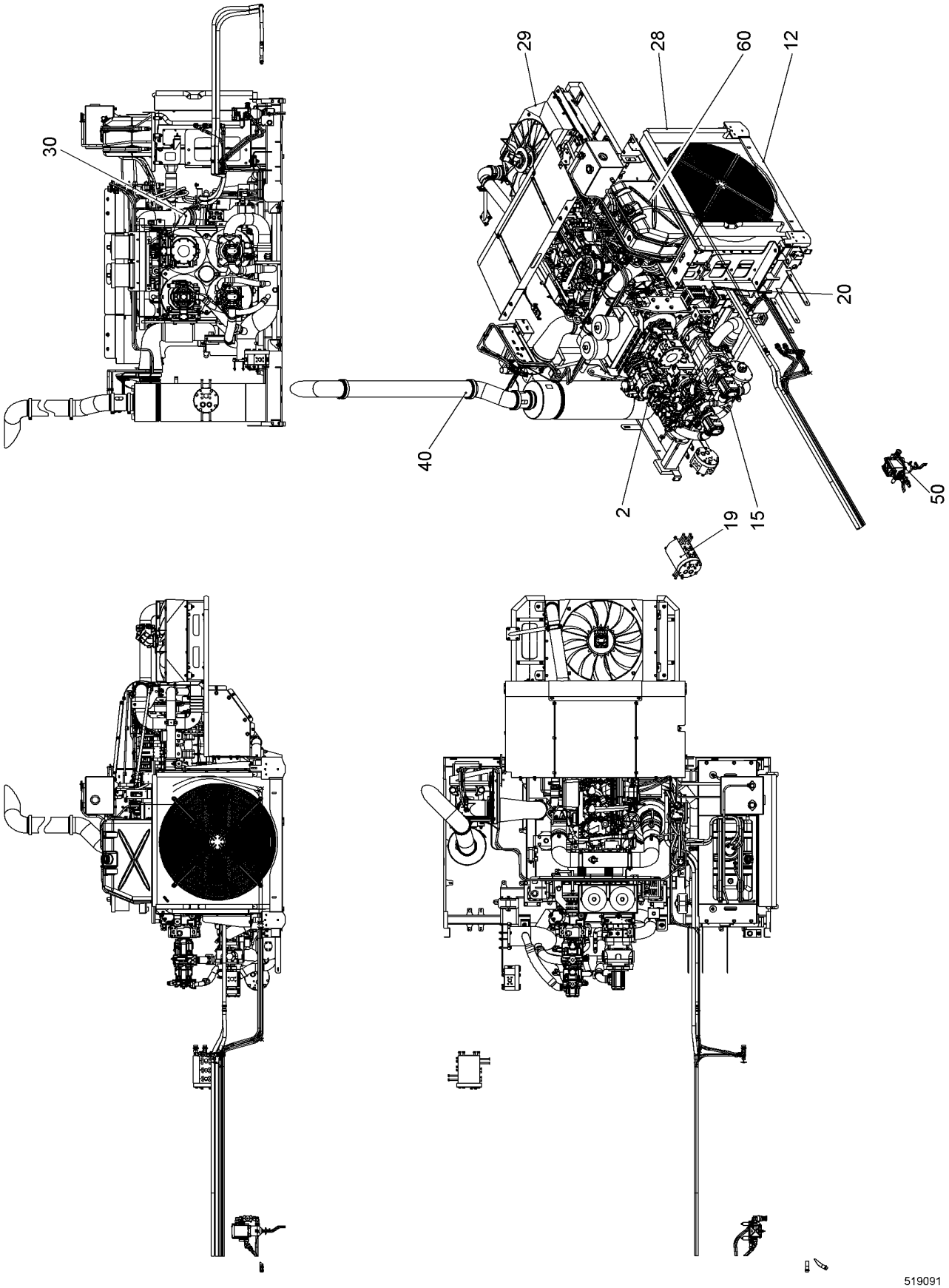
30
29
28
60
12
20
40
2
19
15
50
519091

Pos.	Item	Quantity	Description	Bezeichnung	Serie	K
2	11247735	1	HYDR POWER UNIT ⇨ ❑ 74	AGGREGAT HYDR		
3	11244487	1	CENTRAL POWER UNIT EL ⇨ ❑ 160	ZENTRALAGGREGAT EL		
4	11241137	1	HOSE LIST ⇨ ❑ 161	SCHLAUCHLISTE		
12	11241138	1	MOTOR BEARING CPL ⇨ ❑ 163	MOTORLAGER KPL		
15	10519481	1	SUCTION PIPE OIL ⇨ ❑ 165	ANSAUGROHR OEL		
19	10580170	1	RETURN PIPE ⇨ ❑ 168	RUECKLAUFROHR		
20	11241139	1	MOTOR PRE-ASSEMBLY ⇨ ❑ 169	MOTORVORMONTAGE		
28	11241140	1	COOLER INSTALLATION WATER ⇨ ❑ 253	KUEHLER EINBAU WASSER		
29	11241141	1	COOLER INSTALLATION CHARGE AIR ⇨ ❑ 260	KUEHLER EINBAU LADELUFT		
30	11241142	1	SUCTION UNIT AIR ⇨ ❑ 263	ANSAUGANLAGE LUFT		
40	11241143	1	EXHAUST GAS SYSTEM ⇨ ❑ 267	ABGASANLAGE		
50	11241144	1	FUEL SYSTEM ⇨ ❑ 270	KRAFTSTOFFANLAGE		
60	11241145	1	ASSEMBLY INSTAL. ⇨ ❑ 274	ANLAGE HARNSTOFF EINBAU		
90	11241146	1	COVER ⇨ ❑ 279	ABDECKUNG		

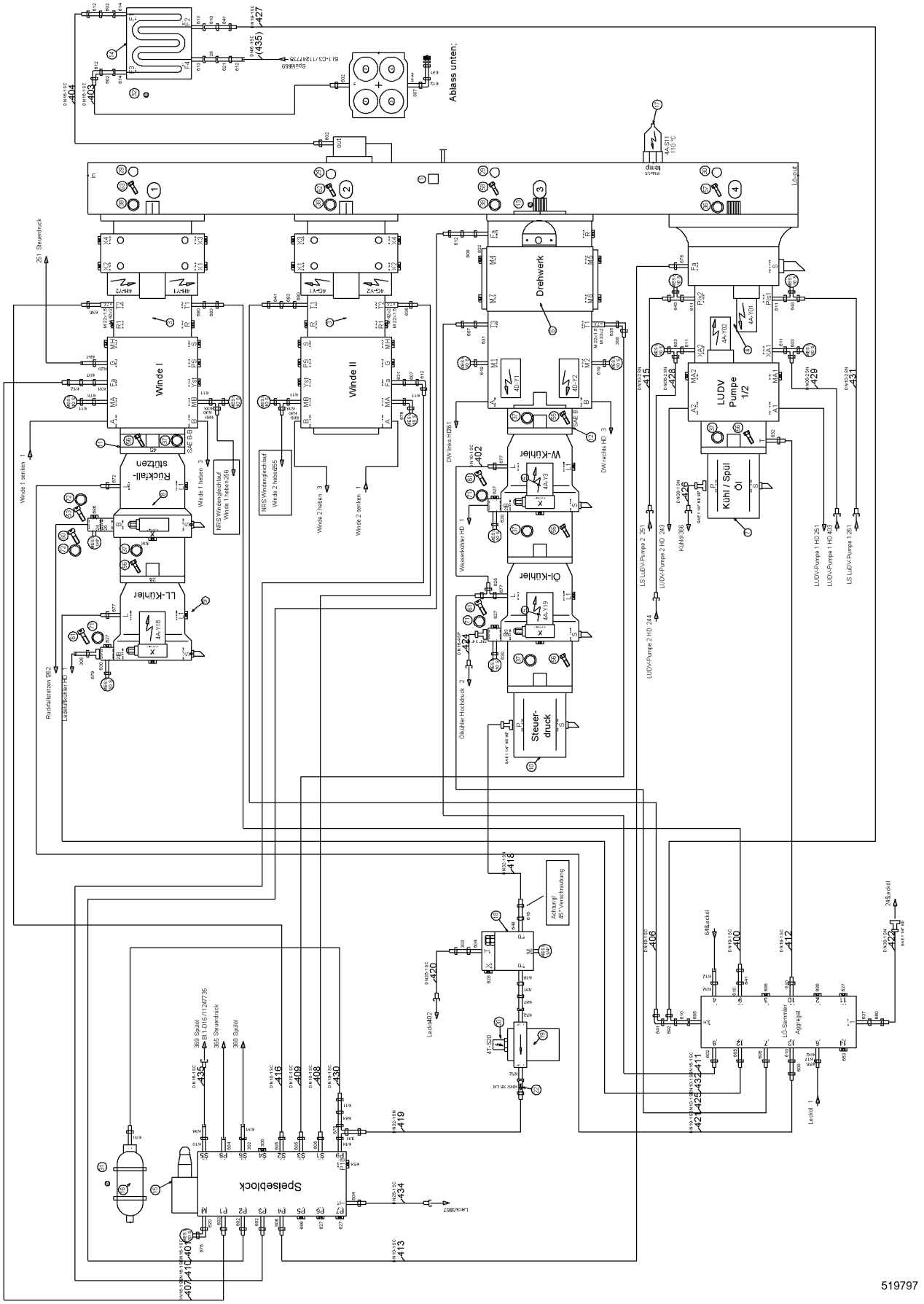
Ablass unten
Winde I
Winde II
Drehwerk
LUDV Pumpe 1/2
Kühl / Spül Öl
W-Kühler
Öl-Kühler
LL-Kühler
Rückfall-stutzen
Steuer-druck
Speiseblock
LO-Sammler Aggregat
251 Steuerdruck
519797

Pos.	Item	Quantity	Description	Bezeichnung	Serie	K
1	11246820	1	DISTRIBUTOR GEARBOX ⇨ ❑ 77	VERTEILERGETRIEBE		
2	11253687	1	RESTRICTOR BODY	DROSSELKOERPER		
3	10534307	2	V PUMP ⇨ ❑ 79	V.PUMPE		
4	10118349	1	DOUBLE V-PUMP ⇨ ❑ 95	DOPPELV.PUMPE		
5	10530653	2	V PUMP	V.PUMPE		
6	10128787	1	V PUMP ⇨ ❑ 115	V.PUMPE		
7	512249914	1	GEAR PUMP	ZAHNRADPUMPE		
8	10226505	1	V PUMP ⇨ ❑ 142	V.PUMPE		
9	10226013	1	V PUMP ⇨ ❑ 152	V.PUMPE		
10	512214414	1	GEAR PUMP	ZAHNRADPUMPE		
11	10553922	1	THROUGH DRIVE	DURCHTRIEB		
12	10129874	1	THROUGH DRIVE ⇨ ❑ 137	DURCHTRIEB		
13	10594064	1	COUPLING PIECE	KUPPLUNGSSTUECK		
14	10446225	1	HEAT EXCHANGER	WAERMETAUSCHER		
15	511637714	1	VALVE BLOCK FEED PRESSURE ⇨ ❑ 158	VENTILBLOCKSPEISEDRUCK		
16	510641214	1	BLADDER ACCUMULATOR	BLASENSPEICHER		
17	10513459	1	TEMPERATURE SWITCH	TEMPERATURSCHALTER		
18	511414514	1	PRESSURE LIMITING VALVE	DRUCKBEGRENZUNGSVENTIL		
19	10223581	1	PRESSURE FILTER ⇨ ❑ 159	DRUCKFILTER		
20	592200514	1	CLOGGING INDICATOR	VERSCHMUTZUNGSANZEIGE		
22	511419314	1	NON-RETURN VALVE	RUECKSCHLAGVENTIL		
24	944137814	1	FLANGE	FLANSCH		
25	944813514	1	FLANGE	FLANSCH		
26	11253689	2	RESTRICTOR BODY	DROSSELKOERPER		
27	511442214	1	OIL DRAIN PLUG M22X1.5	OELABLASSSCHRAUBE		
28	10446305	1	SPECIAL THREADED UNION	SONDERVERSCHRAUBUNG		
29	726411214	3	O-RING	O-RING		
30	790311914	1	O-RING	O-RING		
31	774212914	2	CLAMP	SCHELLE		
32	10350978	1	FASTENING CLIP	BEF SCHELLE		
36	421700314	4	WASHER DIN 7989-B 18 ST;	SCHEIBE		
37	460022703	14	WASHER EN 14399-6 12 C45	SCHEIBE		
38	422010414	20	WASHER RD 34/20.4X5 30 CRMO V 9	SCHEIBE		
52	4001246	4	HEX SCREW ISO 4017 M10X35 10.9	SECHSKANTSCHRAUBE		
53	4043133	4	SOCKET HEAD SCREW ISO 4762 M10X70 10.9	ZYLINDERSCHRAUBE		
56	4066124	12	HEX SCREW ISO 4017 M12X30 10.9	SECHSKANTSCHRAUBE		
57	10543907	4	HEX SCREW ISO 4017 M16X70 10.9	SECHSKANTSCHRAUBE		
58	10543922	4	HEX SCREW ISO 4017 M20X50 10.9	SECHSKANTSCHRAUBE		
59	4066098	12	HEX SCREW ISO 4017 M10X30 10.9	SECHSKANTSCHRAUBE		
60	4043124	4	SOCKET HEAD SCREW ISO 4762 M10X25 10.9	ZYLINDERSCHRAUBE		
61	404333614	12	SOCKET HEAD SCREW ISO 4762 UNC 3/8"-16	ZYLINDERSCHRAUBE		
62	10544093	4	SOCKET HEAD SCREW ISO 4762 M20X55 10.9	ZYLINDERSCHRAUBE		
63	10544092	4	SOCKET HEAD SCREW ISO 4762 M20X50 10.9	ZYLINDERSCHRAUBE		
70	10472425	3	PLAIN COMPRESSION RING	RECHTECKRING		
71	10490784	13	PLAIN COMPRESSION RING	RECHTECKRING		
72	10490781	2	PLAIN COMPRESSION RING	RECHTECKRING		
300	477704614	1	FLANGE JOINT	VERSCHRAUBUNG		
301	482530914	2	FLANGE JOINT	VERSCHRAUBUNG		
302	247091002	1	FLANGE JOINT	VERSCHRAUBUNG		
303	7617494	1	FLANGE JOINT	VERSCHRAUBUNG		
304	7409720	2	GAUGE CONNECTION	MESSSTUTZEN		

Pos.	Item	Quantity	Description	Bezeichnung	Serie	K
305	7407108	1	FLANGE JOINT	VERSCHRAUBUNG		
306	477704914	1	FLANGE JOINT	VERSCHRAUBUNG		
307	247011602	1	FLANGE JOINT	VERSCHRAUBUNG		
308	247117702	1	FLANGE JOINT	VERSCHRAUBUNG		
310	511502414	6	FLANGE HALF	FLANSCHHAELFTE		
312	510587514	2	FLANGE HALF	FLANSCHHAELFTE		
602	247009702	10	FLANGE JOINT	VERSCHRAUBUNG		
603	7367776	4	FLANGE JOINT	VERSCHRAUBUNG		
604	247010102	4	FLANGE JOINT	VERSCHRAUBUNG		
605	247009402	4	FLANGE JOINT	VERSCHRAUBUNG		
606	247009202	2	FLANGE JOINT	VERSCHRAUBUNG		
607	247041402	3	FLANGE JOINT	VERSCHRAUBUNG		
608	247041102	3	FLANGE JOINT	VERSCHRAUBUNG		
610	247009902	7	FLANGE JOINT	VERSCHRAUBUNG		
611	471008214	8	FLANGE JOINT	VERSCHRAUBUNG		
612	247108302	8	FLANGE JOINT	VERSCHRAUBUNG		
613	247043502	2	FLANGE JOINT	VERSCHRAUBUNG		
614	247043102	2	FLANGE JOINT	VERSCHRAUBUNG		
616	10531725	1	FLANGE JOINT	VERSCHRAUBUNG		
617	247049102	1	FLANGE JOINT	VERSCHRAUBUNG		
619	471004614	2	FLANGE JOINT	VERSCHRAUBUNG		
620	471004514	1	FLANGE JOINT	VERSCHRAUBUNG		
621	247261802	1	FLANGE JOINT	VERSCHRAUBUNG		
625	247128602	1	FLANGE JOINT	VERSCHRAUBUNG		
627	247128402	6	FLANGE JOINT	VERSCHRAUBUNG		
628	247117302	1	FLANGE JOINT	VERSCHRAUBUNG		
629	471033014	1	FLANGE JOINT	VERSCHRAUBUNG		
630	471032808	3	FLANGE JOINT	VERSCHRAUBUNG		
631	471031508	3	FLANGE JOINT	VERSCHRAUBUNG		
632	471031308	2	FLANGE JOINT	VERSCHRAUBUNG		
635	471039908	3	FLANGE JOINT	VERSCHRAUBUNG		
637	471034708	1	FLANGE JOINT	VERSCHRAUBUNG		
641	247126202	5	FLANGE JOINT	VERSCHRAUBUNG		
643	482431314	2	FLANGE JOINT	VERSCHRAUBUNG		
648	790453814	3	FLANGE JOINT	VERSCHRAUBUNG		
652	247044302	2	FLANGE JOINT	VERSCHRAUBUNG		
653	247142002	2	FLANGE JOINT	VERSCHRAUBUNG		
655	477700114	1	FLANGE JOINT	VERSCHRAUBUNG		
660	482530814	1	FLANGE JOINT	VERSCHRAUBUNG		
671	510694514	14	GAUGE CONNECTION	MESSSTUTZEN		
672	471031108	1	FLANGE JOINT	VERSCHRAUBUNG		
675	482330814	1	FLANGE JOINT	VERSCHRAUBUNG		
676	7617268	3	FLANGE JOINT	VERSCHRAUBUNG		
677	471008014	3	FLANGE JOINT	VERSCHRAUBUNG		
678	471030508	1	FLANGE JOINT	VERSCHRAUBUNG		
679	510709214	1	FLANGE JOINT	VERSCHRAUBUNG		
680	471031808	2	FLANGE JOINT	VERSCHRAUBUNG		
683	485431214	3	FLANGE JOINT	VERSCHRAUBUNG		
684	485433314	1	FLANGE JOINT	VERSCHRAUBUNG		
685	475501914	1	FLANGE JOINT	VERSCHRAUBUNG		
686	247112702	4	FLANGE JOINT	VERSCHRAUBUNG		
687	481931614	1	FLANGE JOINT	VERSCHRAUBUNG		
689	477700414	2	FLANGE JOINT	VERSCHRAUBUNG		
690	477400314	2	FLANGE JOINT	VERSCHRAUBUNG		
691	470701414	1	FLANGE JOINT	VERSCHRAUBUNG		
692	247138602	1	FLANGE JOINT	VERSCHRAUBUNG		

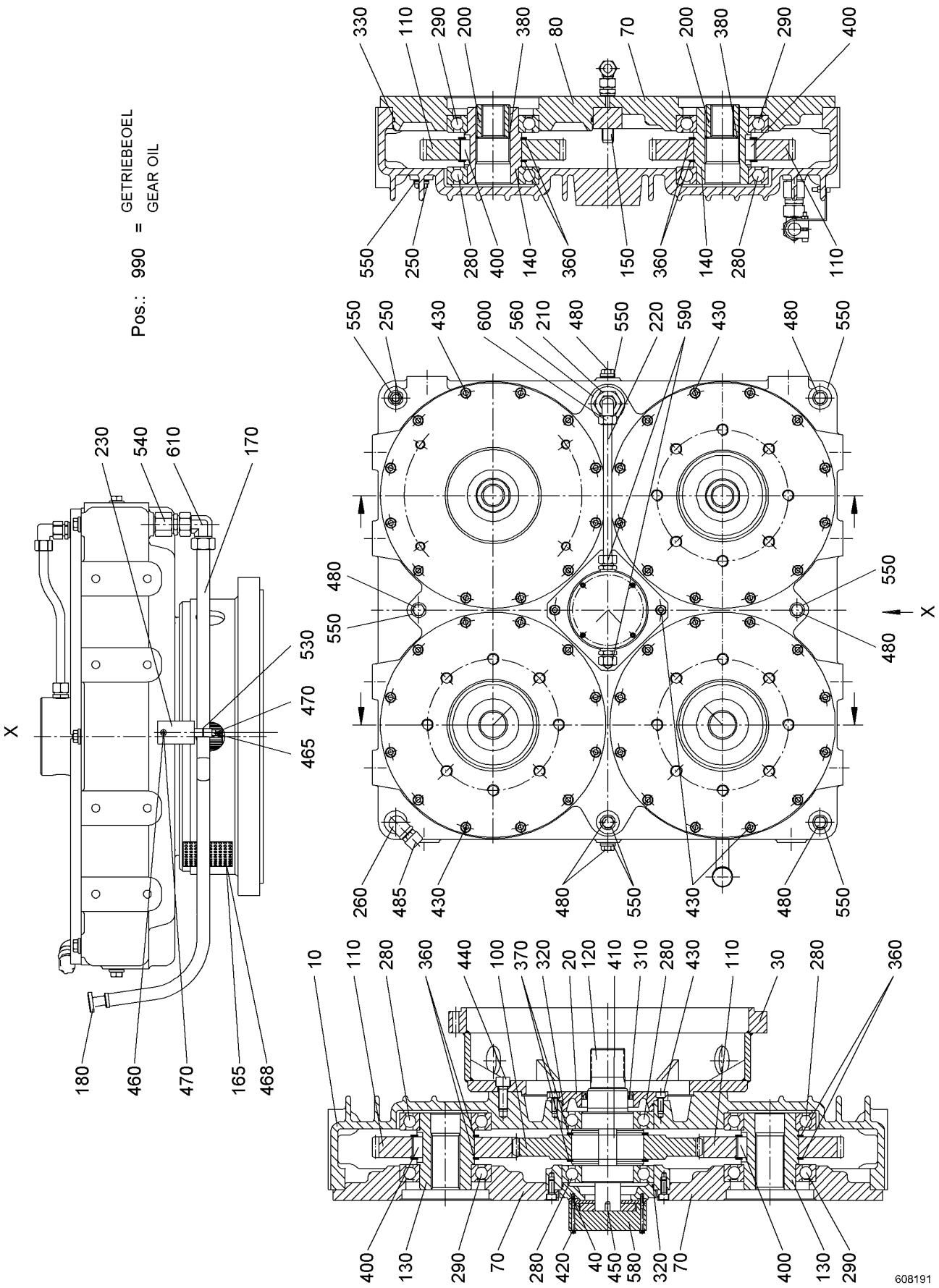
Pos.: 990 = GETRIEBEOEL
GEAR OIL
608191

Pos.	Item	Quantity	Description	Bezeichnung	Serie	K
10	11290844	1	HOUSING	GEHAEUSE		
20	592178514	1	SEALING RING COVER	DICHTRINGDECKEL		
30	11250972	1	ADD-ON FLANGE	ANBAUFLANSCH		
40	790403714	1	ADD-ON FLANGE	ANBAUFLANSCH		
70	11250974	3	ADD-ON FLANGE	ANBAUFLANSCH		
80	11290845	1	ADD-ON FLANGE	ANBAUFLANSCH		
100	11294362	1	SPUR WHEEL	STIRNRAD		
110	11294363	4	SPUR WHEEL	STIRNRAD		
120	790346614	1	SPLINE SHAFT	ZAHNWELLE		
130	10350230	2	PROFILE HOLLOW SHAFT	PROFILHOHLWELLE		
140	11253077	2	PROFILE HOLLOW SHAFT	PROFILHOHLWELLE		
150	592316114	1	THREADED PIPE	GEWINDEROHR		
165	11290846	2	PERFORATED PLATE	LOCHBLECH		
170	11290847	1	TUBE	ROHR		
180	11294364	1	OIL-LEVEL GAUGE	OELMESSSTAB		
200	11290850	2	COUPLING PIECE	KUPPLUNGSSTUECK		
210	592316314	1	SCREW PLUG	VERSCHLUSSSCHRAUBE		
220	592316414	1	TUBE	ROHR		
230	11290852	1	ANGLE	WINKEL		
250	505105814	2	SCREW PLUG D26X26 G1/2" M14X1.5	VERSCHLUSSSCHRAUBE		
260	505104914	1	VENTILATION FILTER	ENTLUEFTUNGSFILTER		
280	745141814	6	DEEP GROOVE BALL BEARING	RILLENKUGELLAGER		
290	10350232	4	DEEP GROOVE BALL BEARING	RILLENKUGELLAGER		
310	790403914	1	SEALING RING	DICHTRING		
320	10593504	2	O-RING	O-RING		
330	790347014	1	O-RING	O-RING		
360	10530197	8	LOCKING RING DIN 471 A100X3	SICHERUNGSRING		
370	485529714	2	LOCKING RING DIN 471 A125X4	SICHERUNGSRING		
380	11268816	2	LOCKING RING DIN 472 J56X2	SICHERUNGSRING		
400	571827308	8	FITTING KEY DIN 6885 B28X16X36 ST	PASSFEDER		
410	485529814	2	FITTING KEY DIN 6885 B32X18X40	PASSFEDER		
420	11250990	4	SOCKET HEAD SCREW ISO 4762 M5X65 8.8	INNENSECHSKANTSCHRAUBE		
430	404208514	58	SOCKET HEAD SCREW ISO 4762 M10X25 A4-7	ZYLINDERSCHRAUBE		
440	10530200	12	SOCKET HEAD SCREW ISO 4762 M16X40 8.8	ZYLINDERSCHRAUBE		
450	10567120	1	FITTING KEY DIN 6885 B8X7X12	PASSFEDER		
460	11290853	1	SOCKET HEAD SCREW ISO4762 M6X25 8.8	INNENSECHSKANTSCHRAUBE		
465	11290854	1	SOCKET HEAD SCREW ISO4762 M6X45 8.8	INNENSECHSKANTSCHRAUBE		
468	11250998	8	HEX SCREW ISO 4017 M5X12 8.8	SECHSKANTSCHRAUBE		
470	11290855	2	HEX NUT M6	SECHSKANTMUTTER		
480	4000898	9	SCREW PLUG DIN 910 R1/2" 5.8	VERSCHLUSSSCHRAUBE		
485	693113814	1	VENTILATION FILTER	ENTLUEFTUNGSFILTER		
530	11290856	1	PIPE CLAMP	ROHRSCHELLE		
540	11290857	1	REDUCING STUD	REDUZIERSTUTZEN		
550	790347114	11	SEALING RING	DICHTRING		
560	790347214	1	SEALING RING	DICHTRING		
580	592178914	1	LUBRICATING OIL PUMP	SCHMIEROELPUMPE		
590	471016401	2	FLANGE JOINT	VERSCHRAUBUNG		
600	592317014	1	THREADED ELBOW JOINT	WINKELVERSCHRAUBUNG		
610	11268711	1	THREADED ELBOW JOINT	WINKELVERSCHRAUBUNG		
990	11282715	8.3	GEAR OIL	GETRIEBEOEL		

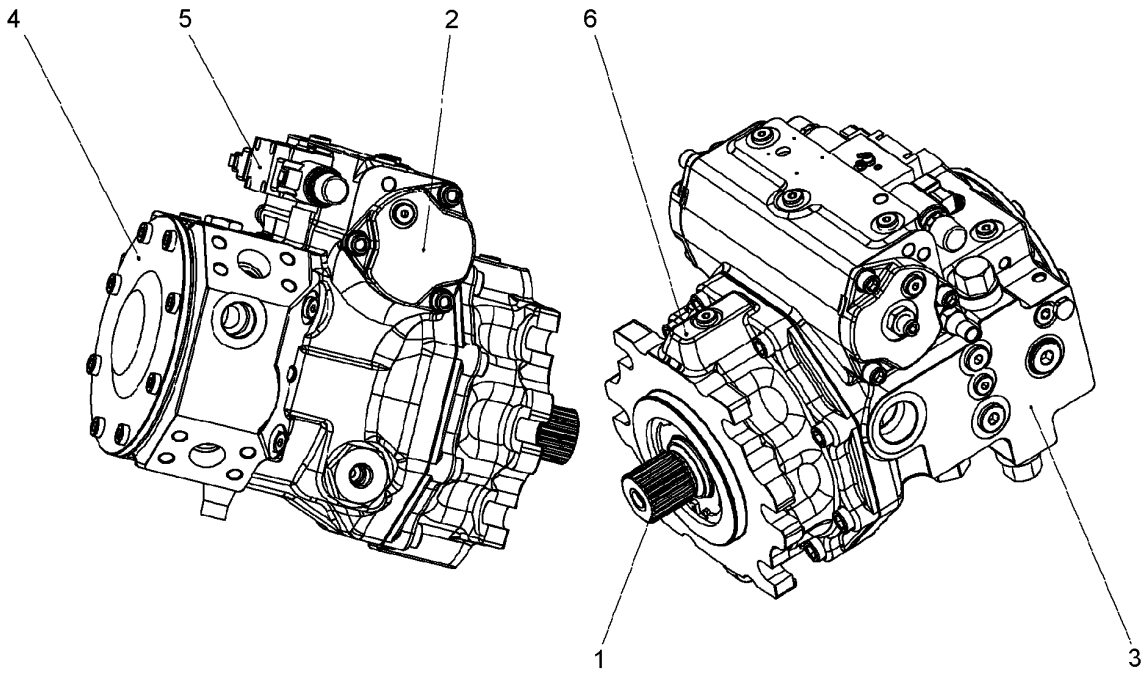

Pos.	Item	Quantity	Description	Bezeichnung	Serie	K
1	11219902	1	DRIVING GEAR ⇨ ❑ 80	TRIEBWERK		
2	11219905	1	ADJUSTMENT ⇨ ❑ 81	VERSTELLUNG		
3	11219910	1	PUMP HOUSING ⇨ ❑ 84	PUMPENGEHAEUSE		
4	11219350	1	PUMP COVER ⇨ ❑ 92	PUMPENDECKEL		
5	11219917	1	CONTROL GEAR ⇨ ❑ 93	STEUERGERAET		
6	11219918	1	BEARING FLANGE ⇨ ❑ 94	LAGERFLANSCH		

OHNE BILD
WITHOUT ILLUSTRATION
SANS PLANCHE
SIN FIG.
SEM ILUSTRAÇÃO
БЕЗ ИЗОБРАЖЕНИЯ

600000

Pos.	Item	Quantity	Description	Bezeichnung	Serie	K
1	11219920	1	DRIVING SHAFT	TRIEBWELLE		
2	11219922	1	CRADLE	WIEGE		
3	11219924	1	HYDRAULIC PARTS DRIVING GEAR	TRIEBWERK HYDRAULIKTEIL		
4	11219356	1	SEALING SET	DS		

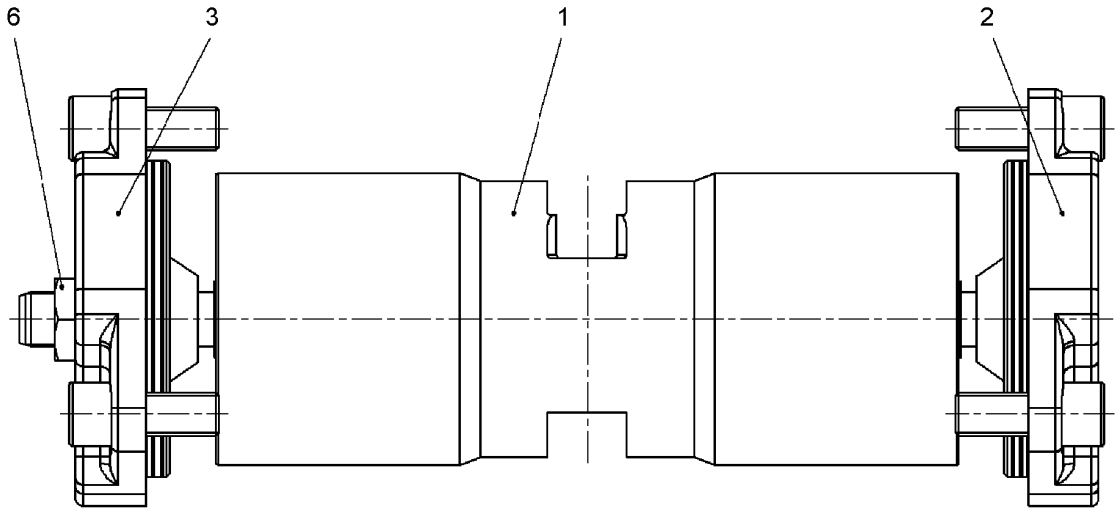

Pos.	Item	Quantity	Description	Bezeichnung	Serie	K
1	11219925	1	ADJUSTING PISTON	STELLKOLBEN		
2	11219927	1	COVER ⇨ ❑ 82	DECKEL		
3	11219929	1	COVER ⇨ ❑ 83	DECKEL		
6	10297942	1	HEX NUT DIN 439 M16X1.5	SECHSKANTMUTTER		

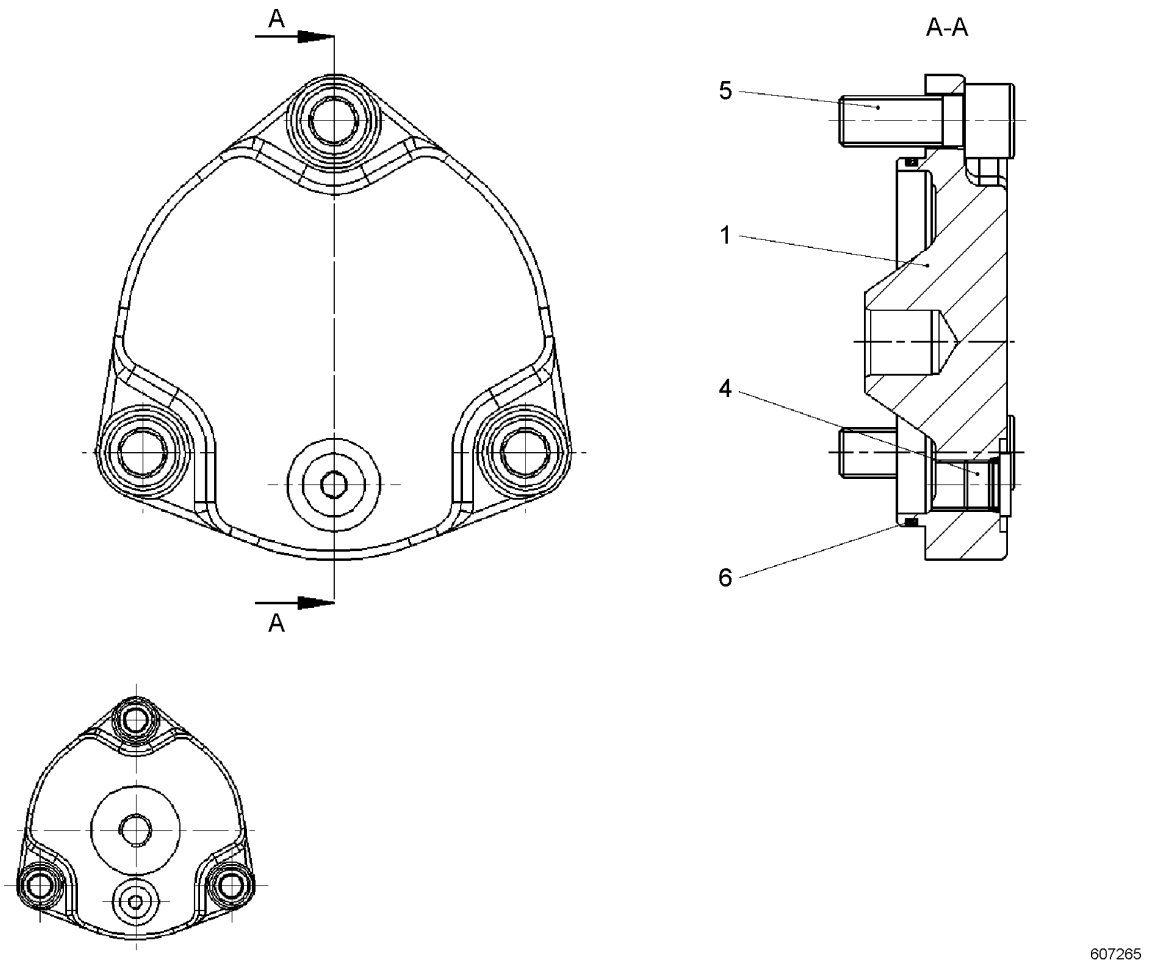

Pos.	Item	Quantity	Description	Bezeichnung	Serie	K
1	11267378	1	COVER	DECKEL		
4	10337050	1	SCREW PLUG M14X1.5 NBR	VERSCHLUSSSCHRAUBE		
5	11217079	3	SOCKET HEAD SCREW	ZYLINDERSCHRAUBE		
6	11267377	1	O-RING	O-RING		

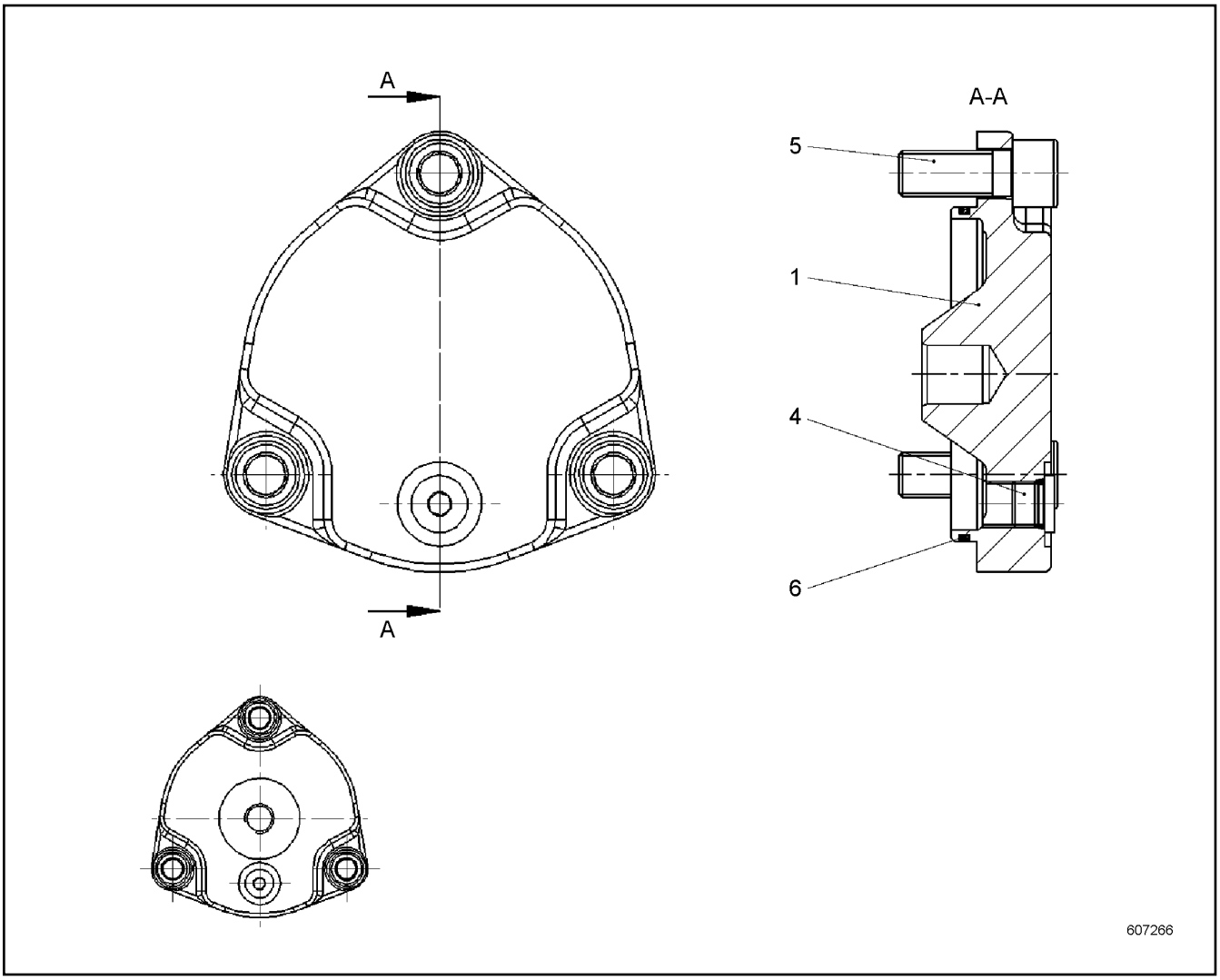

Pos.	Item	Quantity	Description	Bezeichnung	Serie	K
1	11267396	1	COVER	DECKEL		
4	10337050	1	SCREW PLUG M14X1.5 NBR	VERSCHLUSSSCHRAUBE		
5	11217079	3	SOCKET HEAD SCREW	ZYLINDERSCHRAUBE		
6	11267377	1	O-RING	O-RING		

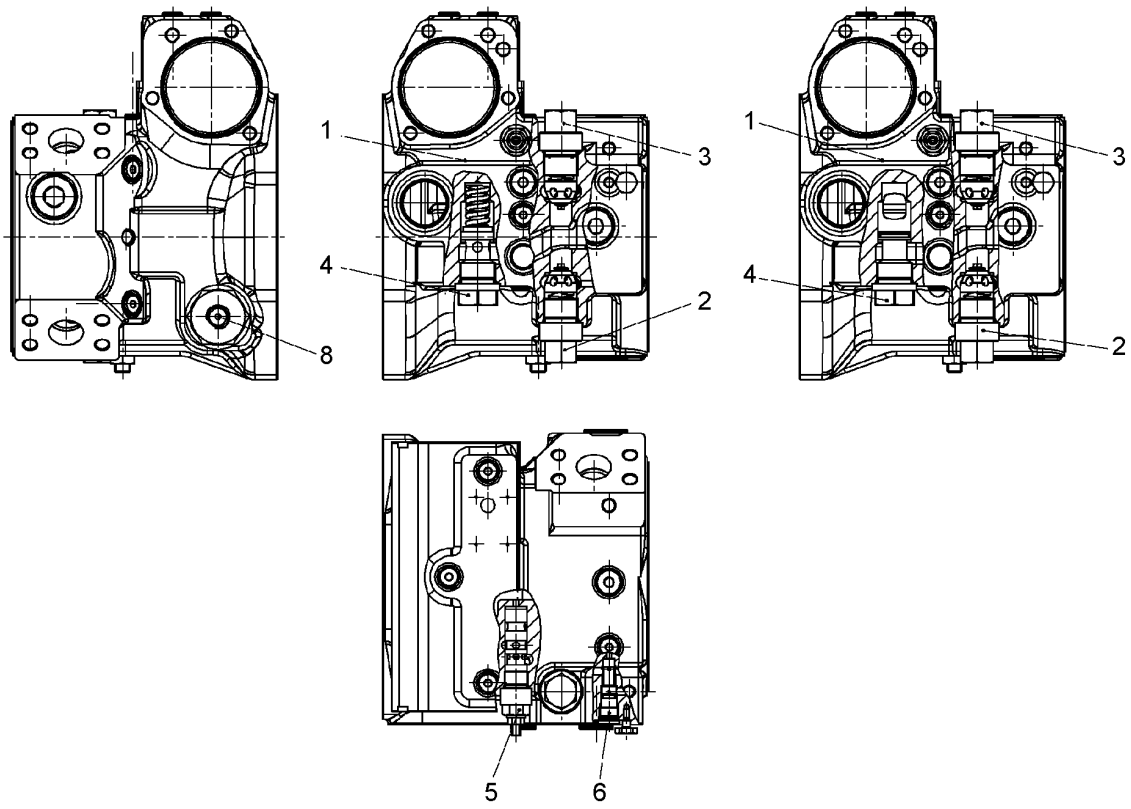

Pos.	Item	Quantity	Description	Bezeichnung	Serie	K
1	11219930	1	PUMP HOUSING ⇨ ❑ 85	PUMPENGEHAEUSE		
2	11219368	1	PRESSURE LIMITING VALVE	DRUCKBEGRENZUNGSVENTIL		
3	10593474	1	PRESSURE LIMITING VALVE ⇨ ❑ 87	DRUCKBEGRENZUNGSVENTIL		
4	11219369	1	LOCKING SET ⇨ ❑ 88	VERSCHLUSSATZ		
5	11067304	1	SHUTDOWN VALVE ⇨ ❑ 89	ABSCHALTVENTIL		
6	11067305	1	SHUTTLE VALVE ⇨ ❑ 90	WECHSELVENTIL		
8	11219933	1	PANEL SCREW	BLENDENSCHRAUBE		

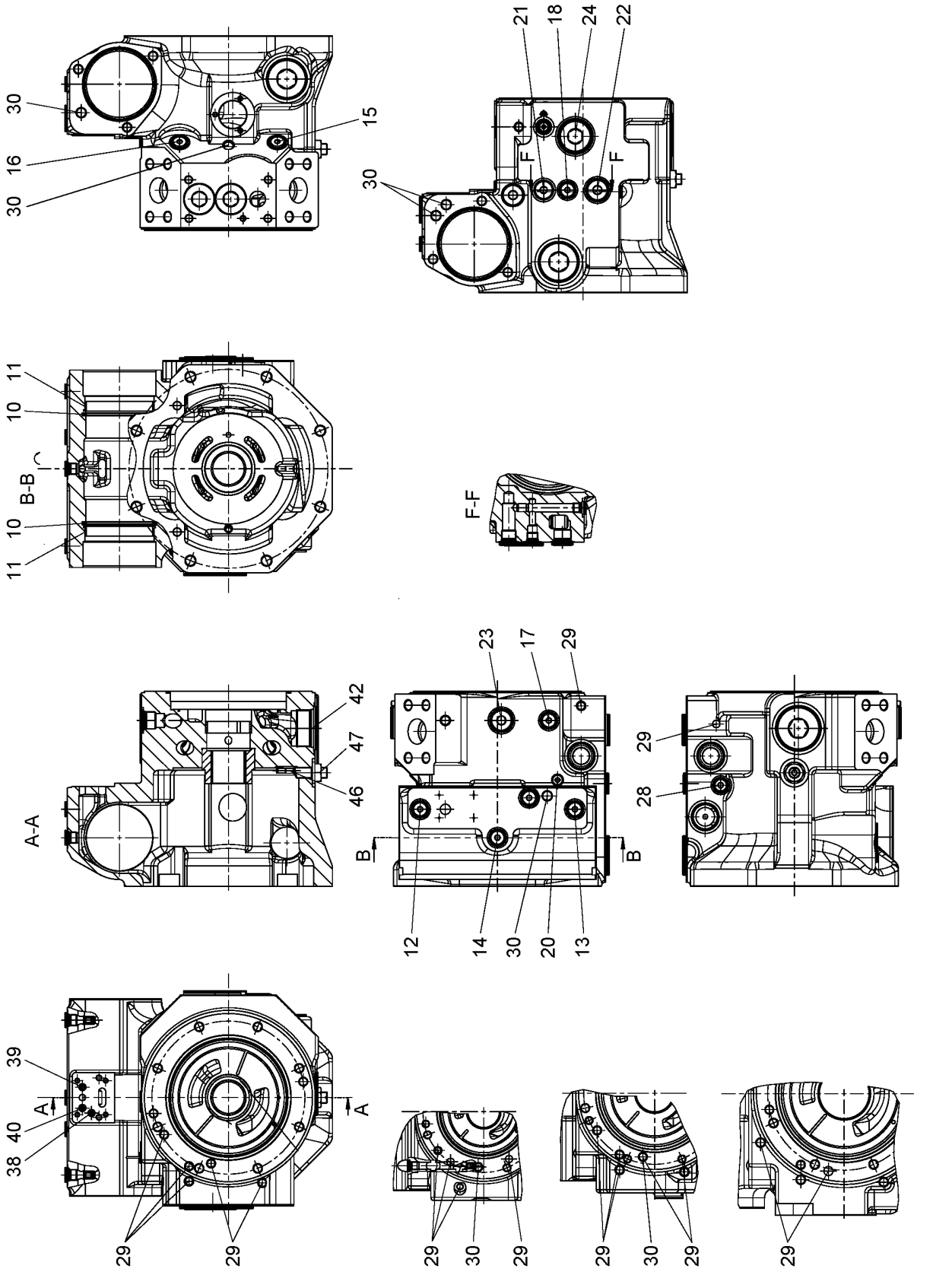
30
16
30
15
21
18
24
22
F
F
30
11
10
B-B
10
11
F-F
23
17
29
42
47
46
A-A
B
B
29
28
12
14
30
20
13
39
A
40
38
A
29
29
29
30
29
29
30
29
29
607268

Pos.	Item	Quantity	Description	Bezeichnung	Serie	K
10	11267400	2	BAR SEAL KIT	STANGENDICHTSATZ		
11	11267401	2	GUIDE RING	FUEHRUNGSRING		
12	10337050	1	SCREW PLUG M14X1.5 NBR	VERSCHLUSSSCHRAUBE		
13	10337050	1	SCREW PLUG M14X1.5 NBR	VERSCHLUSSSCHRAUBE		
14	10337050	1	SCREW PLUG M14X1.5 NBR	VERSCHLUSSSCHRAUBE		
15	10337050	1	SCREW PLUG M14X1.5 NBR	VERSCHLUSSSCHRAUBE		
16	10337050	1	SCREW PLUG M14X1.5 NBR	VERSCHLUSSSCHRAUBE		
17	10337050	1	SCREW PLUG M14X1.5 NBR	VERSCHLUSSSCHRAUBE		
18	10337050	1	SCREW PLUG M14X1.5 NBR	VERSCHLUSSSCHRAUBE		
20	11267402	1	SCREW PLUG	VERSCHLUSSSCHRAUBE		
21	10337052	1	SCREW PLUG M18X1.5 NBR	VERSCHLUSSSCHRAUBE		
22	10349193	1	SCREW PLUG M22X1.5	VERSCHLUSSSCHRAUBE		
23	10349193	1	SCREW PLUG M22X1.5	VERSCHLUSSSCHRAUBE		
24	10289931	1	SCREW PLUG M33X2 NBR	VERSCHLUSSSCHRAUBE		
28	11267403	1	SCREW PLUG	VERSCHLUSSSCHRAUBE		
29	7012971	3	DOUBLE PLUG	DOPPELABREISSSTOPFEN		
30	10424238	3	DOUBLE PLUG	DOPPELABREISSSTOPFEN		
38	11490265	1	FILTER	FILTER		
39	11490265	1	FILTER	FILTER		
40	11490265	1	FILTER	FILTER		
42	10525039	1	SCREW PLUG M48X2	VERSCHLUSSSCHRAUBE		
46	11267405	1	ECCENTRIC SCREW	EXZENTERSCHRAUBE		
47	514618508	1	COLLAR NUT M14X1.5	BUNDMUTTER		

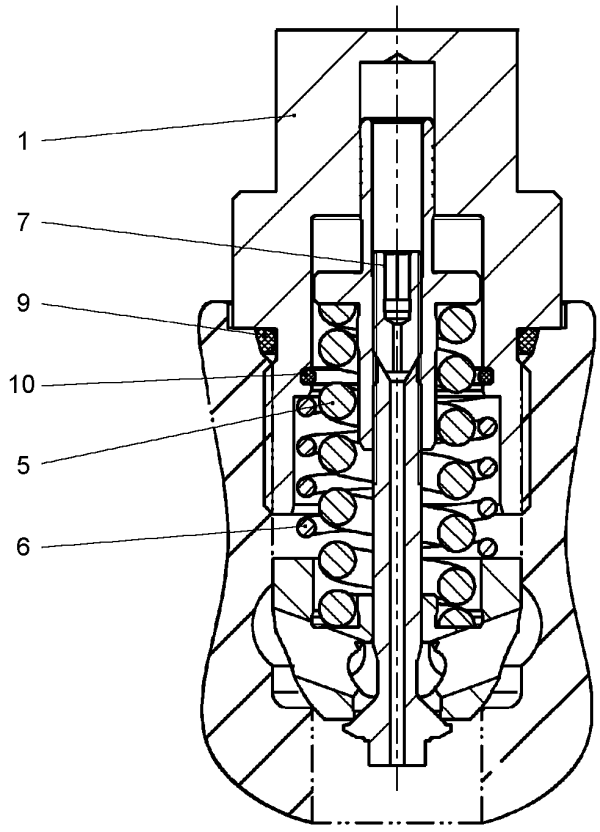

Pos.	Item	Quantity	Description	Bezeichnung	Serie	K
1	11267415	1	SCREW PLUG	VERSCHLUSSSCHRAUBE		
5	7028143	1	PRESSURE SPRING	DRUCKFEDER		
6	11267416	1	PRESSURE SPRING	DRUCKFEDER		
7	11267417	1	GRUB SCREW	GEWINDESTIFT		
9	11267418	1	O-RING	O-RING		
10	7007492	1	O-RING	O-RING		

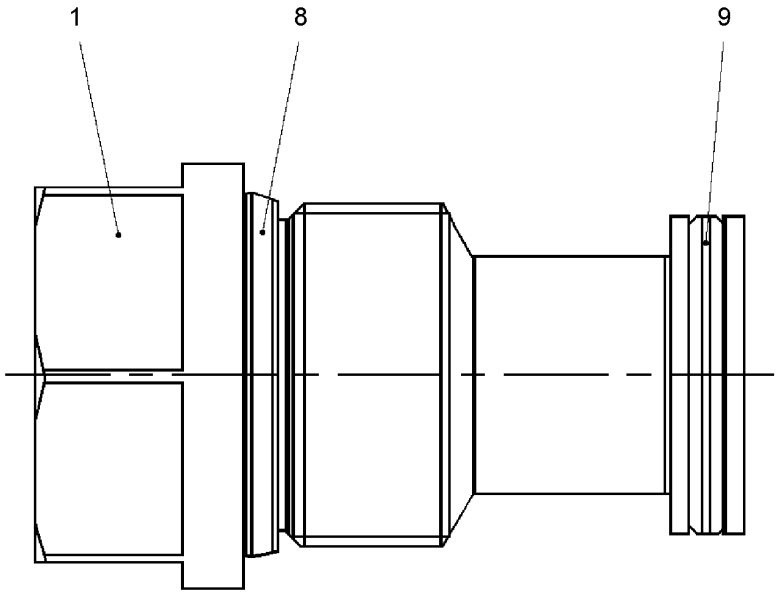

Pos.	Item	Quantity	Description	Bezeichnung	Serie	K
1	11267421	1	SCREW PLUG	VERSCHLUSSSCHRAUBE		
8	11267418	1	O-RING	O-RING		
9	7006213	1	O-RING	O-RING		

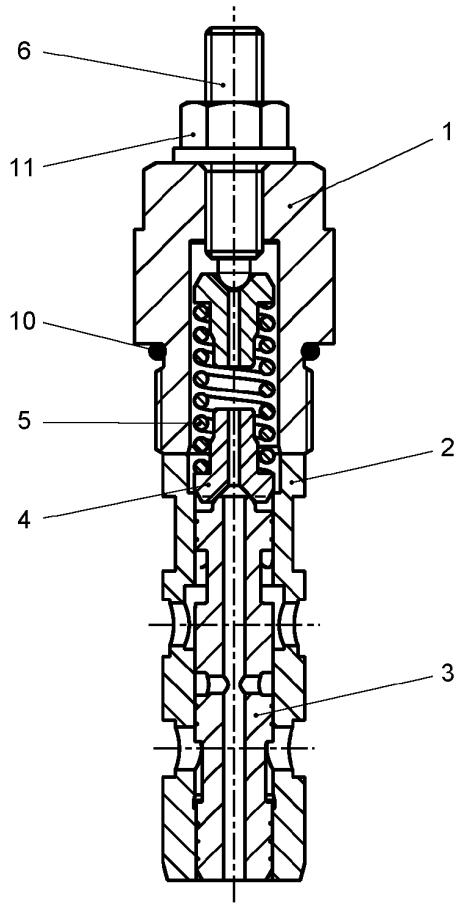

Pos.	Item	Quantity	Description	Bezeichnung	Serie	K
1	11267439	1	SCREW PLUG	VERSCHLUSSSCHRAUBE		
2	11267440	1	SLEEVE	HUELSE		
3	11600281	1	SPOOL	STEUERKOLBEN		
4	11267441	2	SPRING SUPPORT	FEDERTELLER		
5	11267442	1	PRESSURE SPRING	DRUCKFEDER		
6	10599567	1	ADJUSTING SCREW	EINSTELLSCHRAUBE		
10	11212730	1	O-RING	O-RING		
11	7361601	1	GROMMET NUT M8	DICHTUNGSMUTTER		

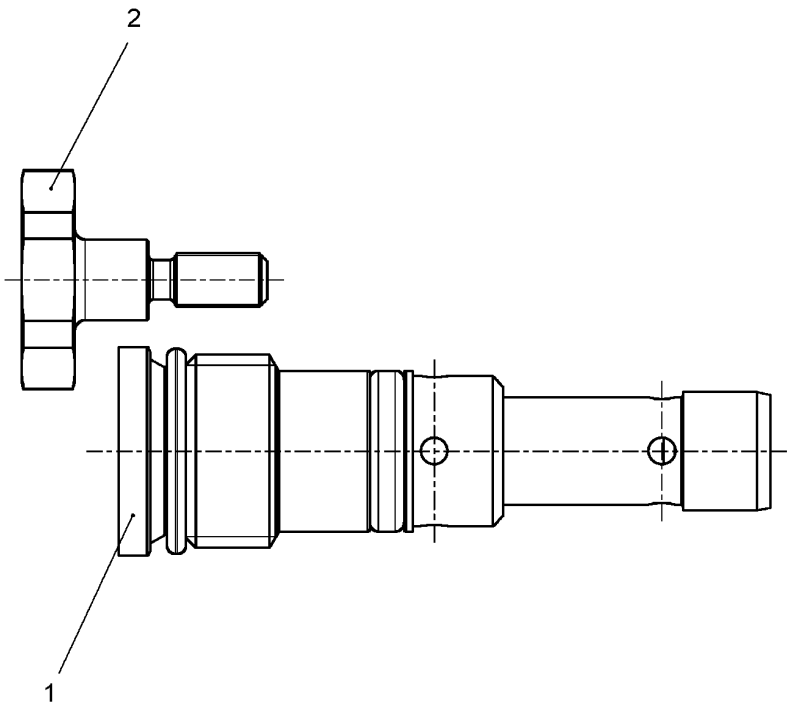

Pos.	Item	Quantity	Description	Bezeichnung	Serie	K
1	11267447	1	SHUTTLE VALVE ⇨ ❑ 91	WECHSELVENTIL		
2	11267448	1	LIMIT STOP SCREW	ANSCHLAGSCHRAUBE		

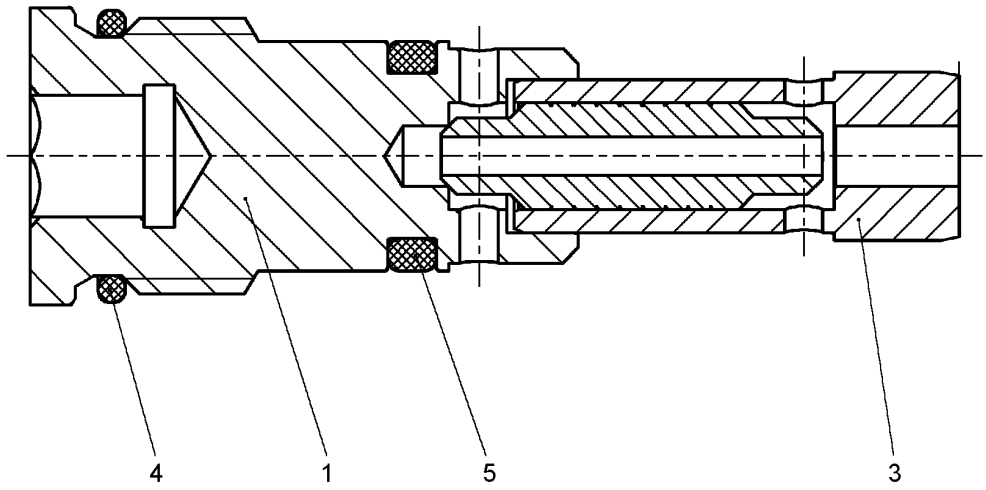

607273

Pos.	Item	Quantity	Description	Bezeichnung	Serie	K
1	11267451	1	SCREW PLUG	VERSCHLUSSSCHRAUBE		
3	11267453	1	SLEEVE	HUELSE		
4	10097551	1	O-RING	O-RING		
5	726429814	1	O-RING	O-RING		

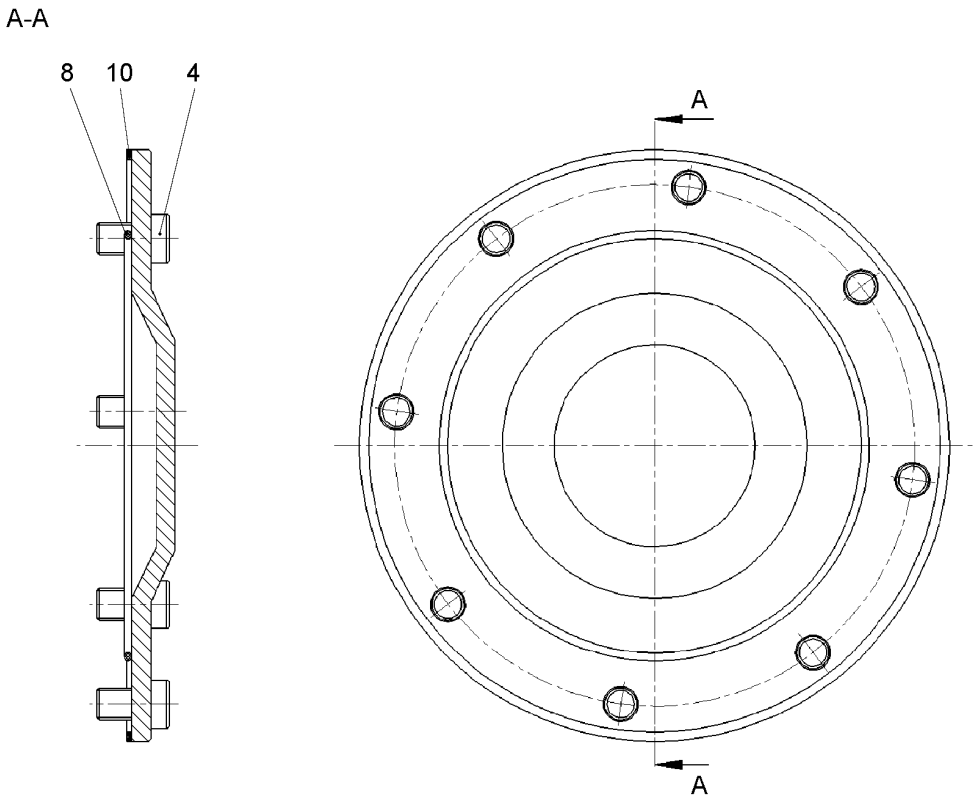

Pos.	Item	Quantity	Description	Bezeichnung	Serie	K
4	11219373	8	SOCKET HEAD SCREW	ZYLINDERSCHRAUBE		
8	11219374	1	O-RING	O-RING		
10	11267455	1	RING	RING		

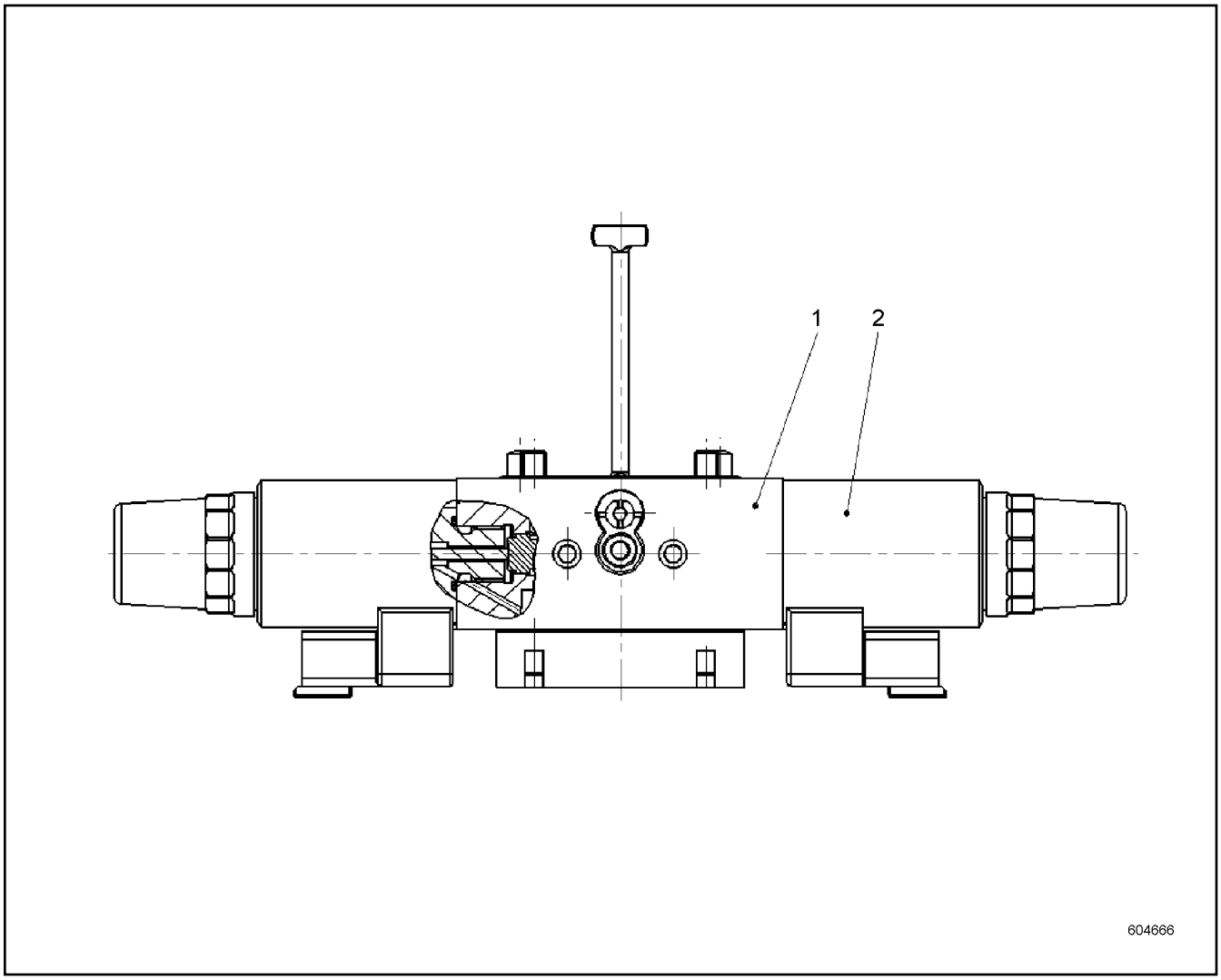

Pos.	Item	Quantity	Description	Bezeichnung	Serie	K
1	11219934	1	CONTROL UNIT	ANSTEUERGERAET		
2	11219375	2	PROPORTIONAL MAGNET	PROPORTIONALMAGNET		

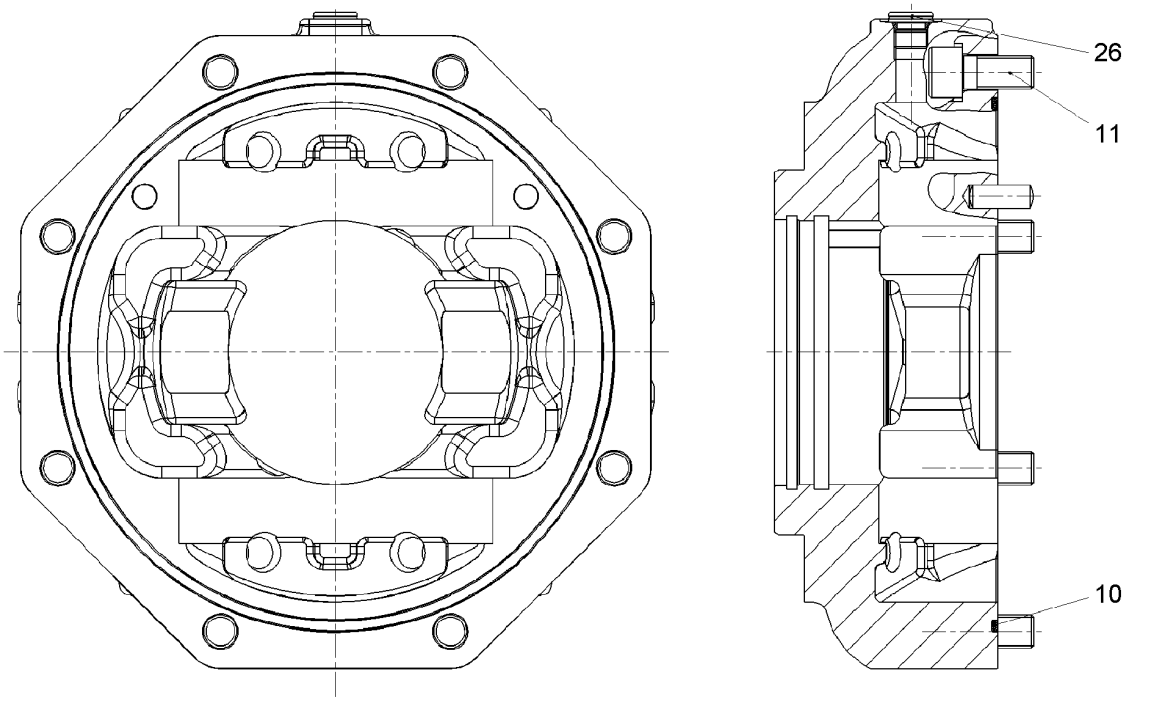

Pos.	Item	Quantity	Description	Bezeichnung	Serie	K
10	11219376	1	O-RING	O-RING		
11	11219936	8	SOCKET HEAD SCREW	ZYLINDERSCHRAUBE		
26	10337050	1	SCREW PLUG M14X1.5 NBR	VERSCHLUSSSCHRAUBE		

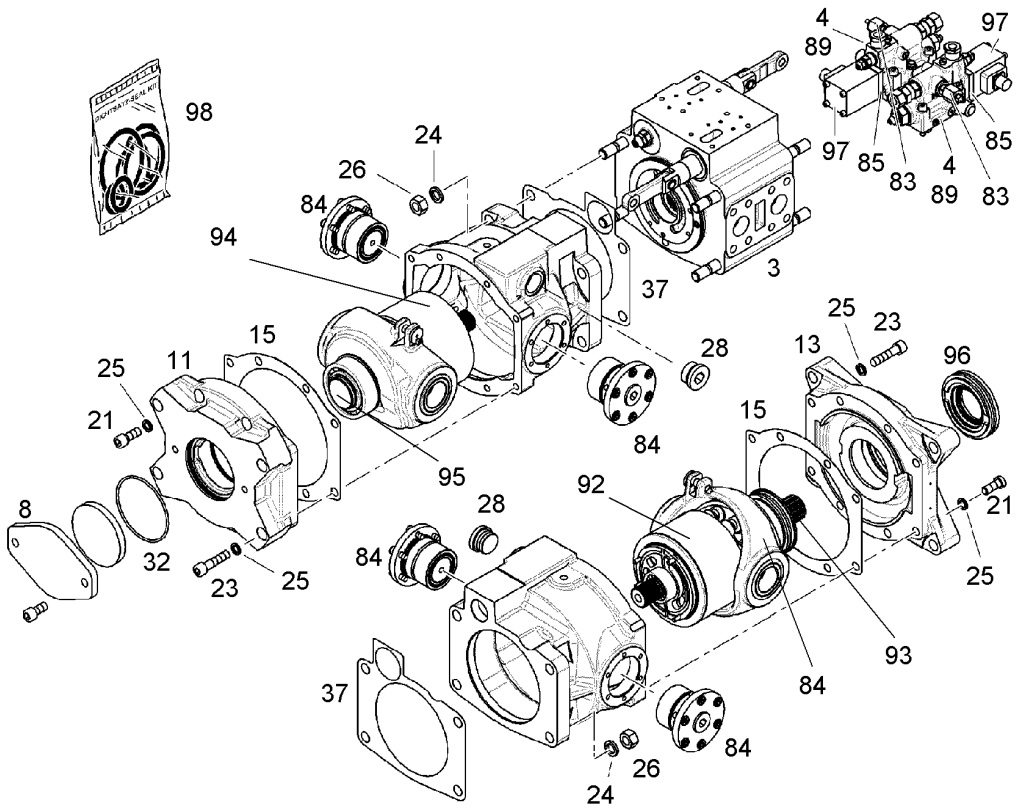

Pos.	Item	Quantity	Description	Bezeichnung	Serie	K
3	10118350	1	CONNECTION HOUSING ⇨ ❑ 97	ANSCHLUSSGEHAEUSE		
4	9074418	2	REGULATING VALVE ⇨ ❑ 101	REGELVENTIL		
8	10133334	1	COVER ⇨ ❑ 103	DECKEL		
11	9276385	1	CONNECTION FLANGE	ANSCHLUSSFLANSCH		
13	9268423	1	CONNECTION FLANGE	ANSCHLUSSFLANSCH		
15	9882207	2	SEAL	DICHTUNG		
21	4043163	8	SOCKET HEAD SCREW ISO 4762 M12X30 10.9	ZYLINDERSCHRAUBE		
23	10012659	8	SOCKET HEAD SCREW ISO 4762 M12X50 10.9	ZYLINDERSCHRAUBE		
24	4239009	8	LOCK WASHER 17X24X2.6	SICHERUNGSSCHEIBE		
25	4980013	16	CIRCLIP DIN 7980 12 FST	FEDERRING		
26	4980548	8	HEX NUT ISO 8673 10	SECHSKANTMUTTER		
28	10137121	2	SCREW PLUG	VERSCHLUSSSCHRAUBE		
32	7004512	1	O-RING	O-RING		
37	9276860	2	FLAT GASKET	FLACHDICHTUNG		
83	10118367	1	RK PRESSUR CUT-OFF	RS DRUCKABSCHNEIDUNG		
84	10139752	1	REPAIR SET SWIVEL YOKE ⇨ ❑ 104	RS SCHWENKJOCH		
85	9275443	1	REPAIR SET LID	RS DECKEL		
89	9273644	1	SEAL KIT REGULATING VALVE ⇨ ❑ 102	DS REGELVENTIL		
92	9889984	1	REPAIR KIT DRIVING MECHANISM ⇨ ❑ 105	RS TRIEBWERK		
93	9889977	1	REPAIR KIT SHAFT	RS WELLE		

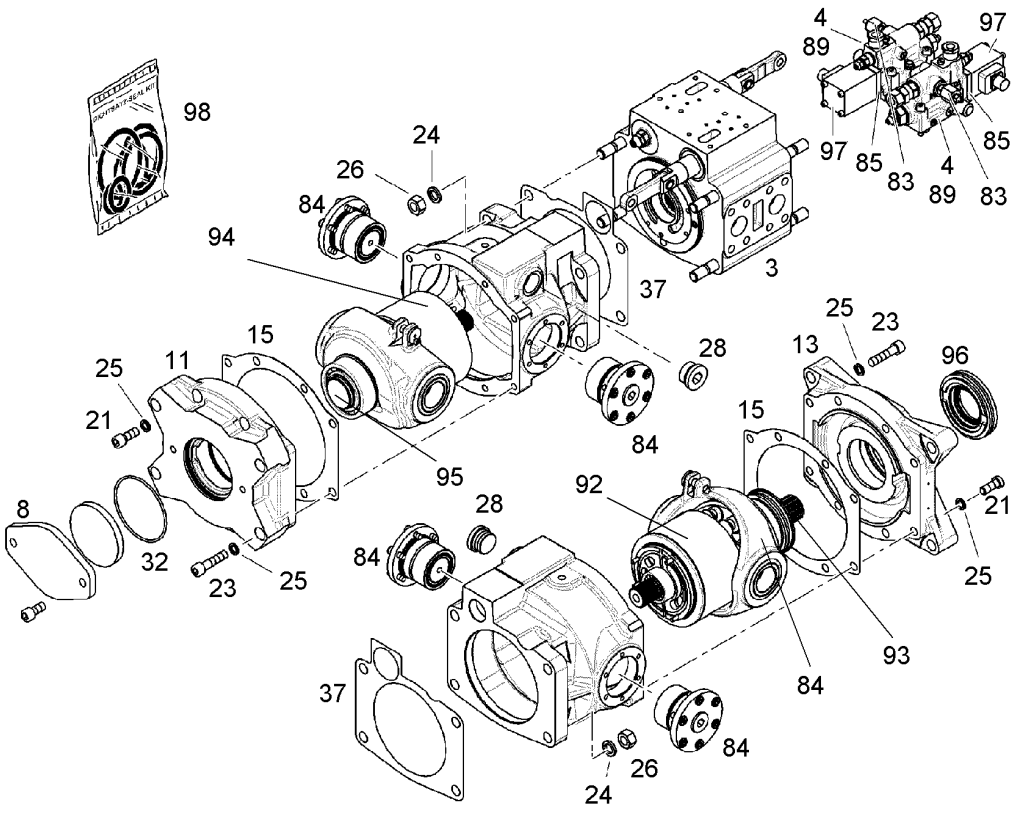

Pos.	Item	Quantity	Description	Bezeichnung	Serie	K
94	9889983	1	REPAIR KIT DRIVING MECHANISM ⇨ ❑ 109	RS TRIEBWERK		
95	9884402	1	REPAIR KIT SHAFT ⇨ ❑ 111	RS WELLE		
96	9268016	1	REPAIR KIT LOCK RING ⇨ ❑ 112	RS VERSCHLUSSRING		
97	9273187	1	REPAIR KIT MAGNET ⇨ ❑ 113	RS MAGNET		
98	9276408	1	SEAL KIT DOUBLE PUMP ⇨ ❑ 114	DS DOPPELPUMPE		

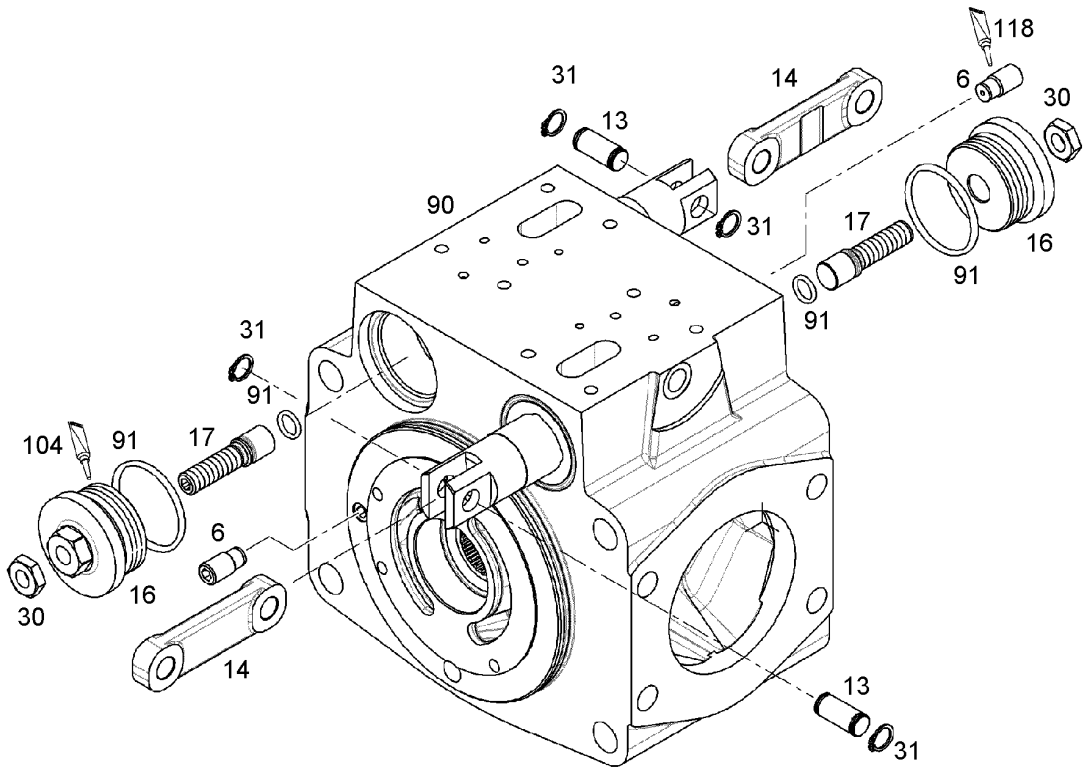

Pos.	Item	Quantity	Description	Bezeichnung	Serie	K
6	9267343	2	VENTILATION VALVE ⇨ ❑ 98	ENTLUEFTUNGSVENTIL		
13	9477439	2	PIN	BOLZEN		
14	9887828	2	CONNECTING LINK	VERBINDUNGSLASCHE		
16	9885660	2	SCREW PLUG M48X2	VERSCHLUSSSCHRAUBE		
17	9885661	2	LIMIT STOP SCREW M12X38 42CRM04	ANSCHLAGSCHRAUBE		
30	4900125	2	HEX NUT ISO 4035 5	SECHSKANTMUTTER		
31	4280008	4	LOCKING RING DIN 471	SICHERUNGSRING		
90	10118357	1	REPAIR KIT CONNECTION HOUSING ⇨ ❑ 99	RS ANSCHLUSSGEHAEUSE		
91	9274731	1	SEAL KIT CONNECTING HOUSING ⇨ ❑ 100	DS ANSCHLUSSGEHAEUSE		
104	811205708	1	SCREW LOCKING	SCHRAUBENSICHERUNG		
118	8655023	1	GLUE	KLEBSTOFF		

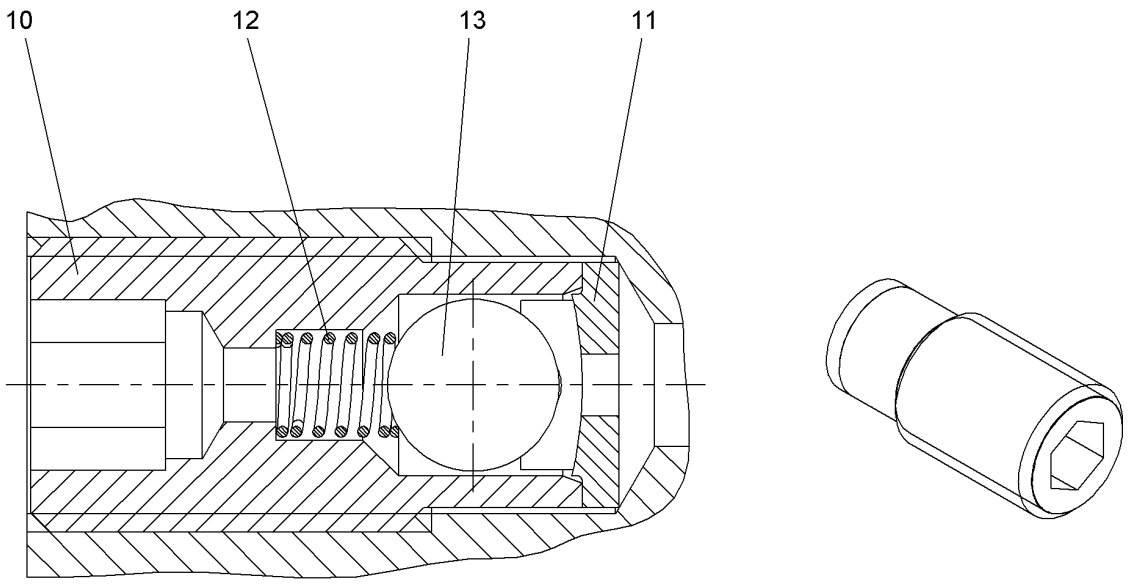

Pos.	Item	Quantity	Description	Bezeichnung	Serie	K
10	9267340	1	SLEEVE	HUELSE		
11	9267341	1	RING	RING		
12	9267342	1	PRESSURE SPRING	DRUCKFEDER		
13	4901195	1	BALL	KUGEL		

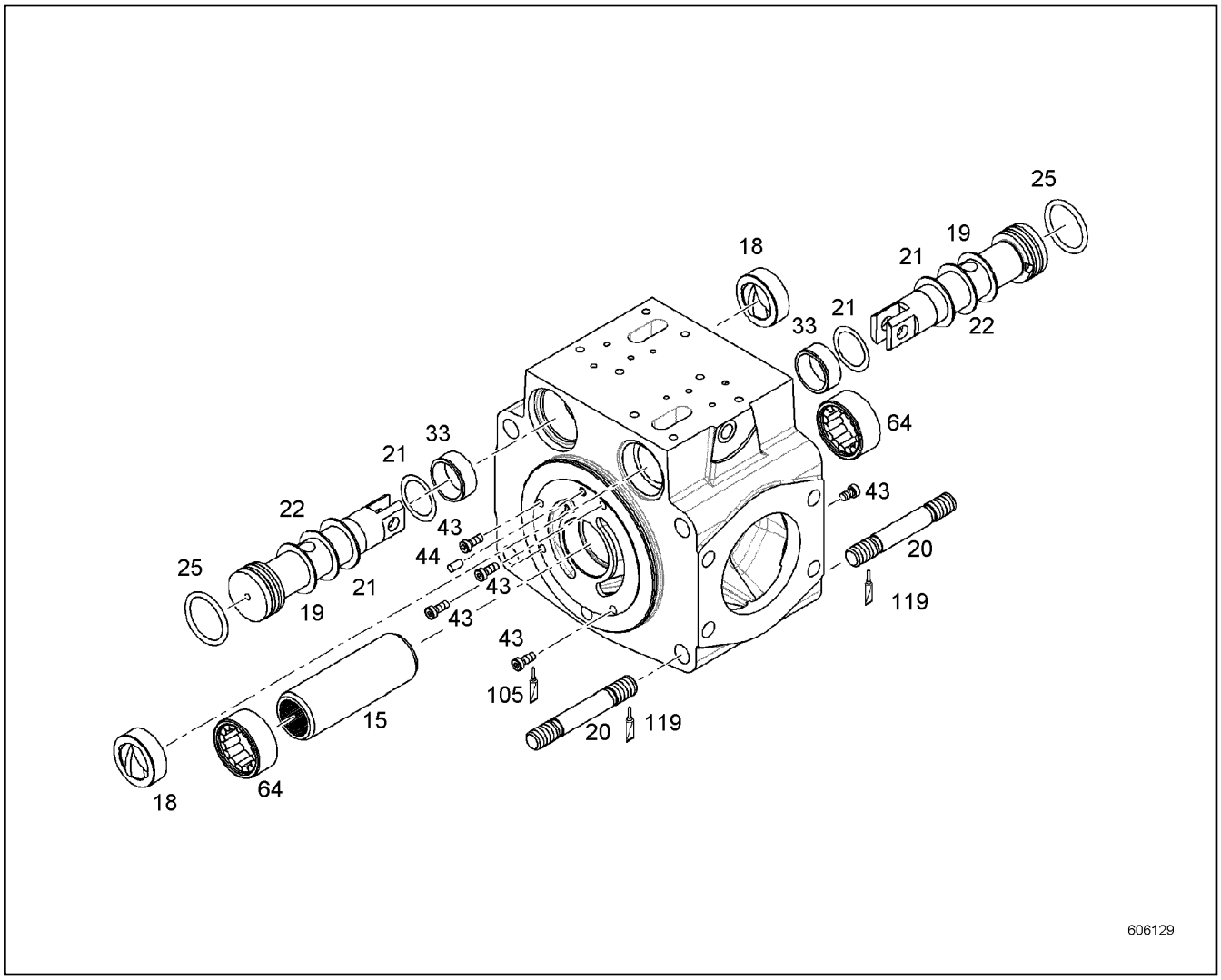

Pos.	Item	Quantity	Description	Bezeichnung	Serie	K
15	9073827	1	COUPLING FERRULE	KUPPLUNGSHUELSE		
18	9266680	2	GUIDE RING	FUEHRUNGSRING		
19	7380291	2	SUPPORTING WASHER S32X44X2 FST	STUETZSCHEIBE		
20	9275003	8	DOUBLE-ENDED STUD M16X1.5	STIFTSCHRAUBE		
21	7380815	4	SUPPORTING WASHER S32X44X0.5 FST	STUETZSCHEIBE		
22	7380586	2	SUPPORTING WASHER S32X44X1.3 FST	STUETZSCHEIBE		
25	10285620	2	SEALING RING	MANTELRING		
33	9881114	2	GUIDE RING	FUEHRUNGSRING		
43	4981218	8	SOCKET HEAD SCREW ISO 14580 M6X16 10.9	ZYLINDERSCHRAUBE		
44	4980046	2	PARALLEL PIN ISO 8734 5M6X12 ST	ZYLINDERSTIFT		
64	7469905	2	CYL.NEEDLE BEARING	ZYLINDERNADELLAGER		
105	8655016	1	SCREW LOCKING	SCHRAUBENSICHERUNG		
119	8655032	1	GLUE	KLEBSTOFF		

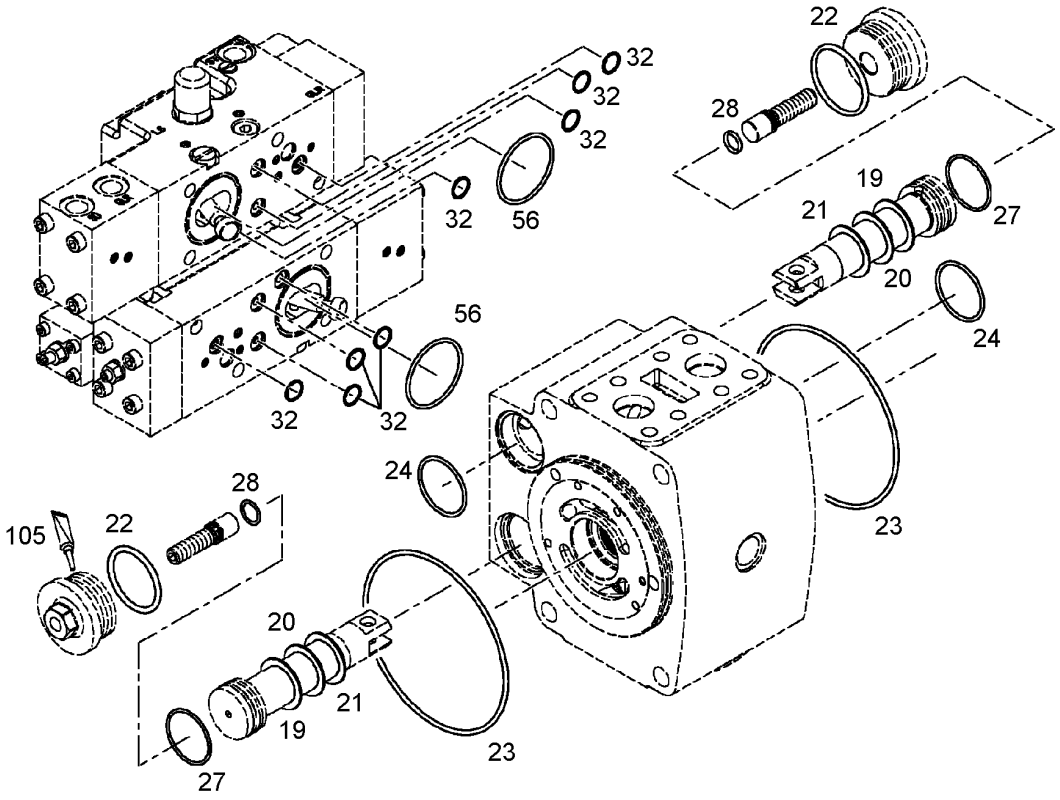

Pos.	Item	Quantity	Description	Bezeichnung	Serie	K
19	7380291	2	SUPPORTING WASHER S32X44X2 FST	STUETZSCHEIBE		
20	7380586	2	SUPPORTING WASHER S32X44X1.3 FST	STUETZSCHEIBE		
21	7380815	4	SUPPORTING WASHER S32X44X0.5 FST	STUETZSCHEIBE		
22	7380015	2	O-RING	O-RING		
23	7000329	2	O-RING	O-RING		
24	7380348	2	O-RING	O-RING		
27	10285620	2	SEALING RING	MANTELRING		
28	7380120	2	O-RING	O-RING		
32	7380648	10	O-RING	O-RING		
56	7380888	2	O-RING	O-RING		
105	8655016	1	SCREW LOCKING	SCHRAUBENSICHERUNG		

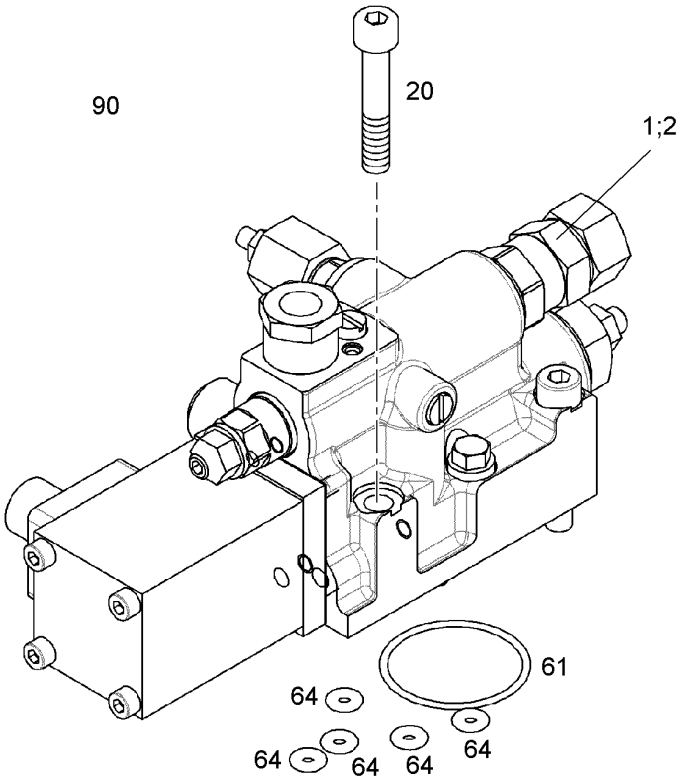

606131

Pos.	Item	Quantity	Description	Bezeichnung	Serie	K
1	10121091	1	ADAPTER	ADAPTER		
2	7381367	1	SEALING RING	DICHTRING		
20	4980840	4	SOCKET HEAD SCREW ISO 4762 M8X45 12.9	ZYLINDERSCHRAUBE		
61	7380888	1	O-RING	O-RING		
64	7380648	5	O-RING	O-RING		
90	9273644	1	SEAL KIT REGULATING VALVE ⇨ ❑ 102	DS REGELVENTIL		
900	11253240	1	SCREW FITTING CPL	VERSCHRAUBUNG KPL		

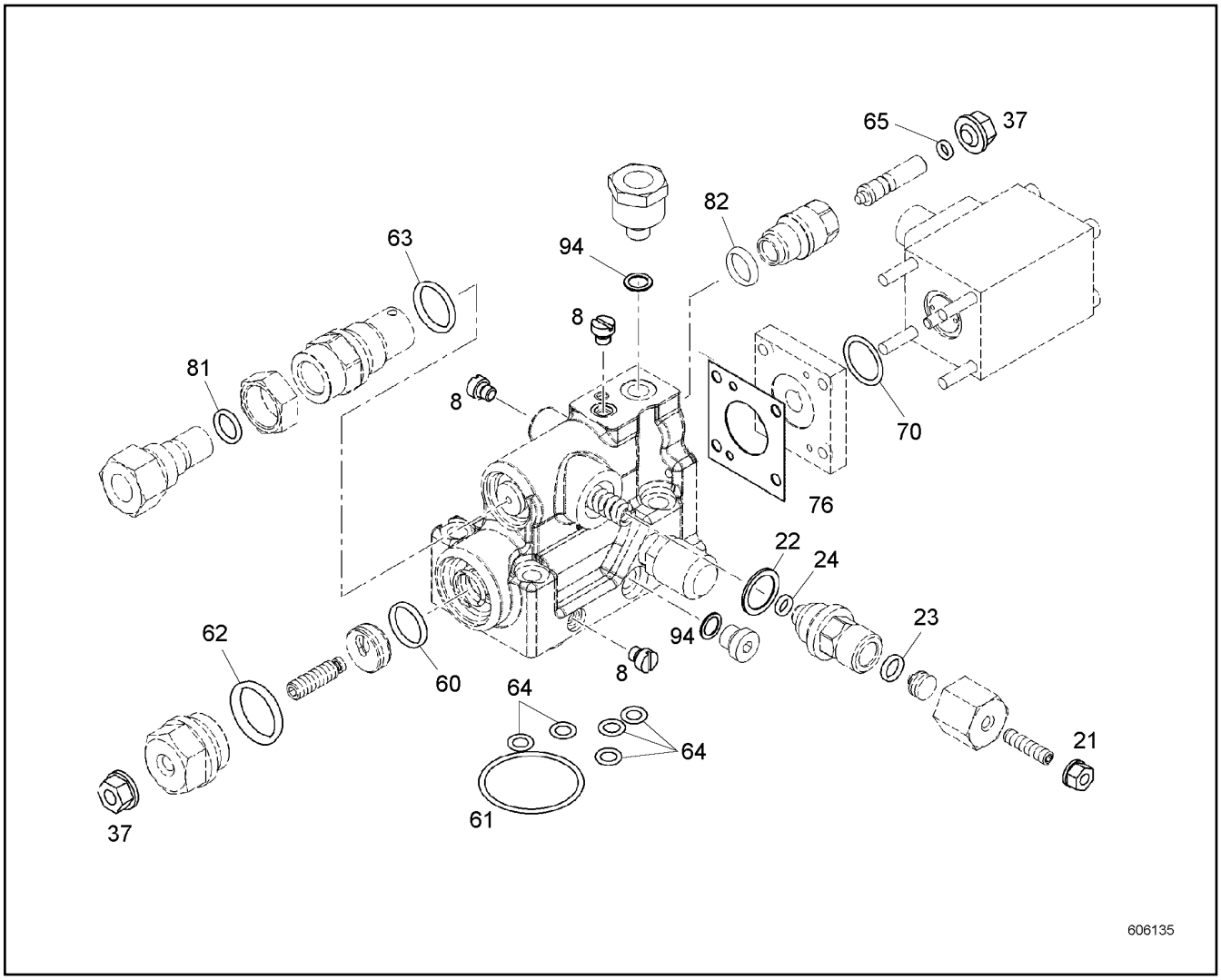

Pos.	Item	Quantity	Description	Bezeichnung	Serie	K
8	9268441	3	SCREW PLUG M6	VERSCHLUSSSCHRAUBE		
21	7361600	1	GROMMET NUT M6	DICHTUNGSMUTTER		
22	7013116	1	SEALING RING	DICHTRING		
23	7381442	1	O-RING	O-RING		
24	7381056	1	O-RING	O-RING		
37	7361601	2	GROMMET NUT M8	DICHTUNGSMUTTER		
60	7381103	1	O-RING	O-RING		
61	7380888	1	O-RING	O-RING		
62	7380865	1	O-RING	O-RING		
63	7381087	1	O-RING	O-RING		
64	7380648	5	O-RING	O-RING		
65	7380612	1	O-RING	O-RING		
70	7380868	1	O-RING	O-RING		
76	9275428	1	SEAL	DICHTUNG		
81	7380596	1	O-RING	O-RING		
82	7381082	1	O-RING	O-RING		
94	7381367	2	SEALING RING	DICHTRING		

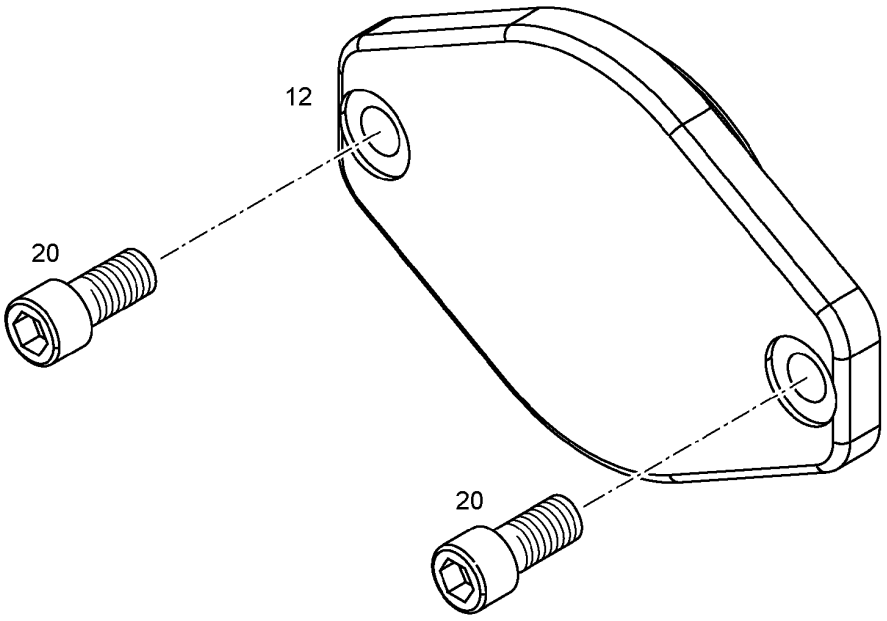

Pos.	Item	Quantity	Description	Bezeichnung	Serie	K
12	10134561	1	COVER	DECKEL		
20	4980938	2	SOCKET HEAD SCREW ISO 4762 M12X25 8.8	ZYLINDERSCHRAUBE		

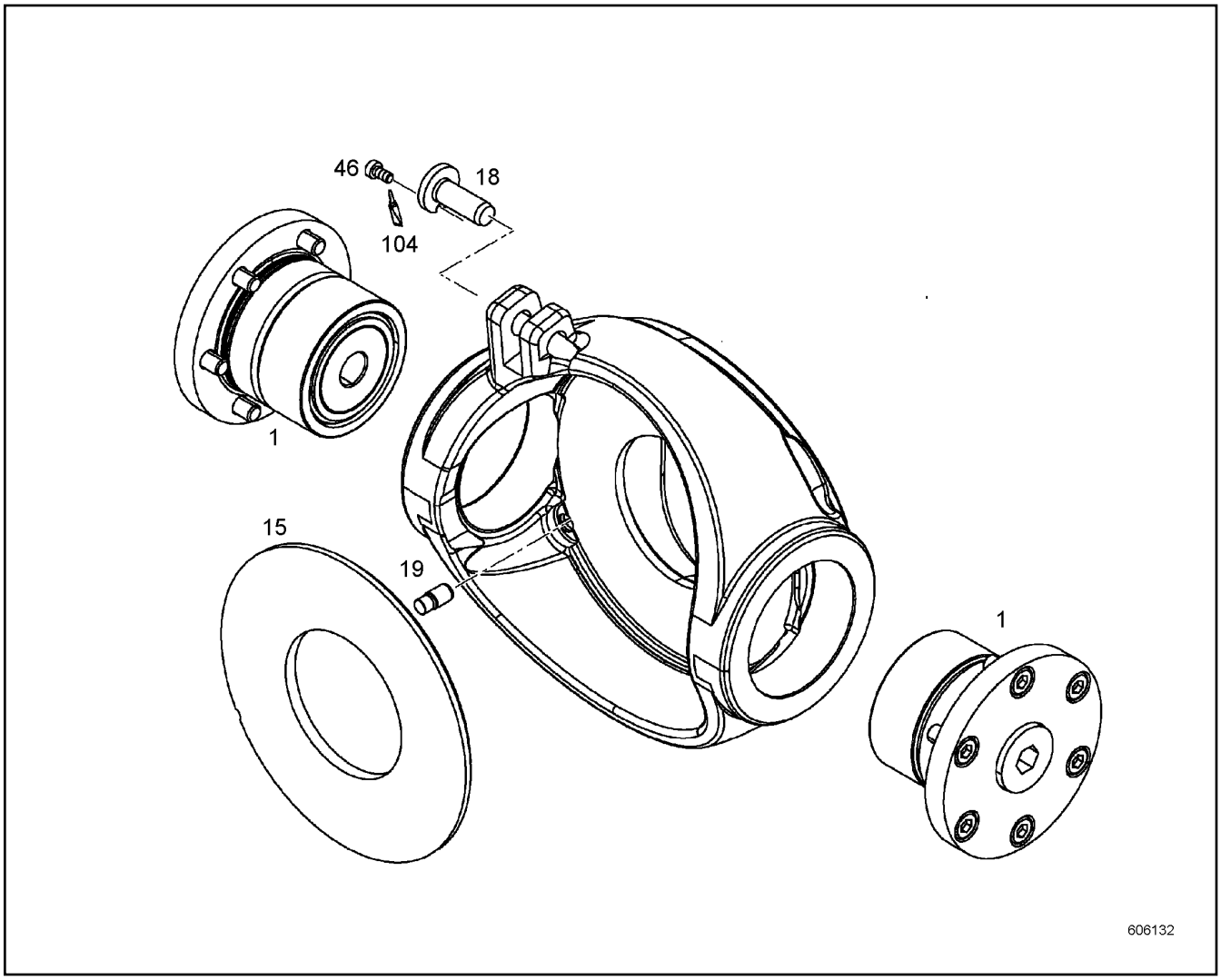

Pos.	Item	Quantity	Description	Bezeichnung	Serie	K
1	9077464	2	RS FLANGE	RS FLANSCH		
15	9889809	1	SLIDING DISC	GLEITSCHEIBE		
18	9477429	1	PIN X	BOLZEN		
19	9888133	1	PIN	STIFT		
46	4980750	1	SOCKET HEAD SCREW DIN 6912 8.8	ZYLINDERSCHRAUBE		
104	811205708	1	SCREW LOCKING	SCHRAUBENSICHERUNG		

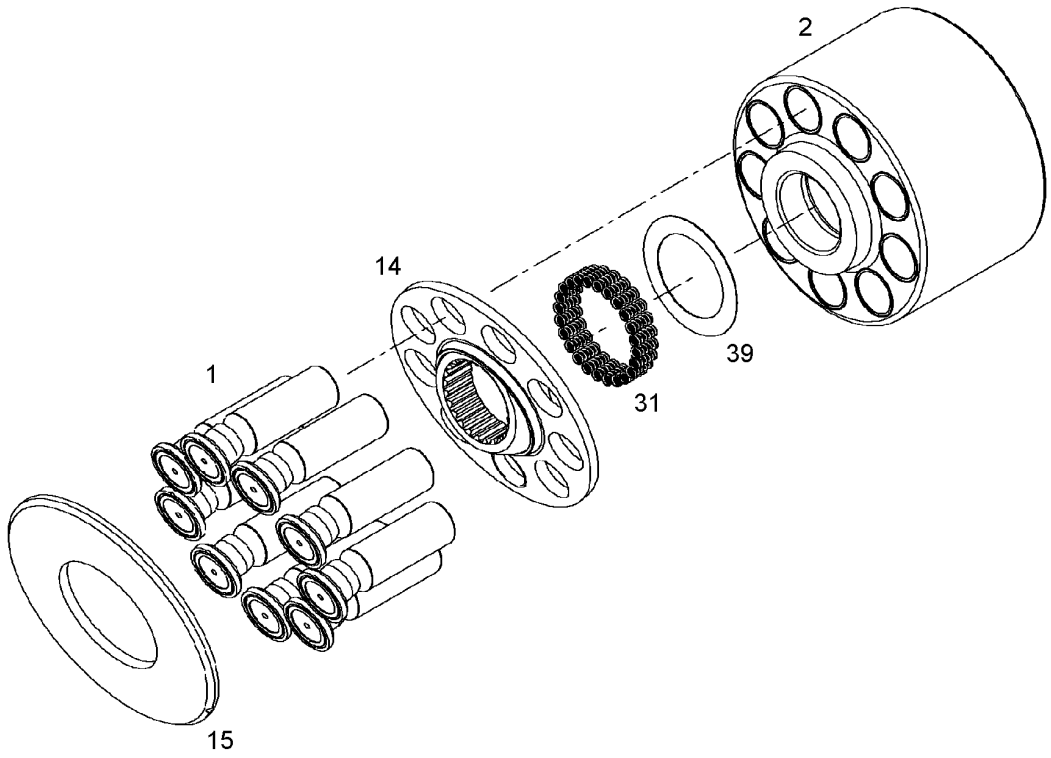

Pos.	Item	Quantity	Description	Bezeichnung	Serie	K
1	9889831	9	RK PISTON WITH GUIDE SHOE	RS KOLBEN MIT GLEITSCHUH		
2	9889833	1	RK CYLINDER+CONTROL PLATE ⇨ ❑ 106	RS ZYLINDER+STEUERPLATTE		
14	9889988	1	RK PULL-BACK BALL+PULL-B.PLATE	RS RUECKZUGKUGEL+RUECKZ.		
15	9889809	1	SLIDING DISC	GLEITSCHEIBE		
31	7382167	24	PRESSURE SPRING	DRUCKFEDER		
39	9885924	1	WASHER SET ⇨ ❑ 108	SCHEIBENSATZ		

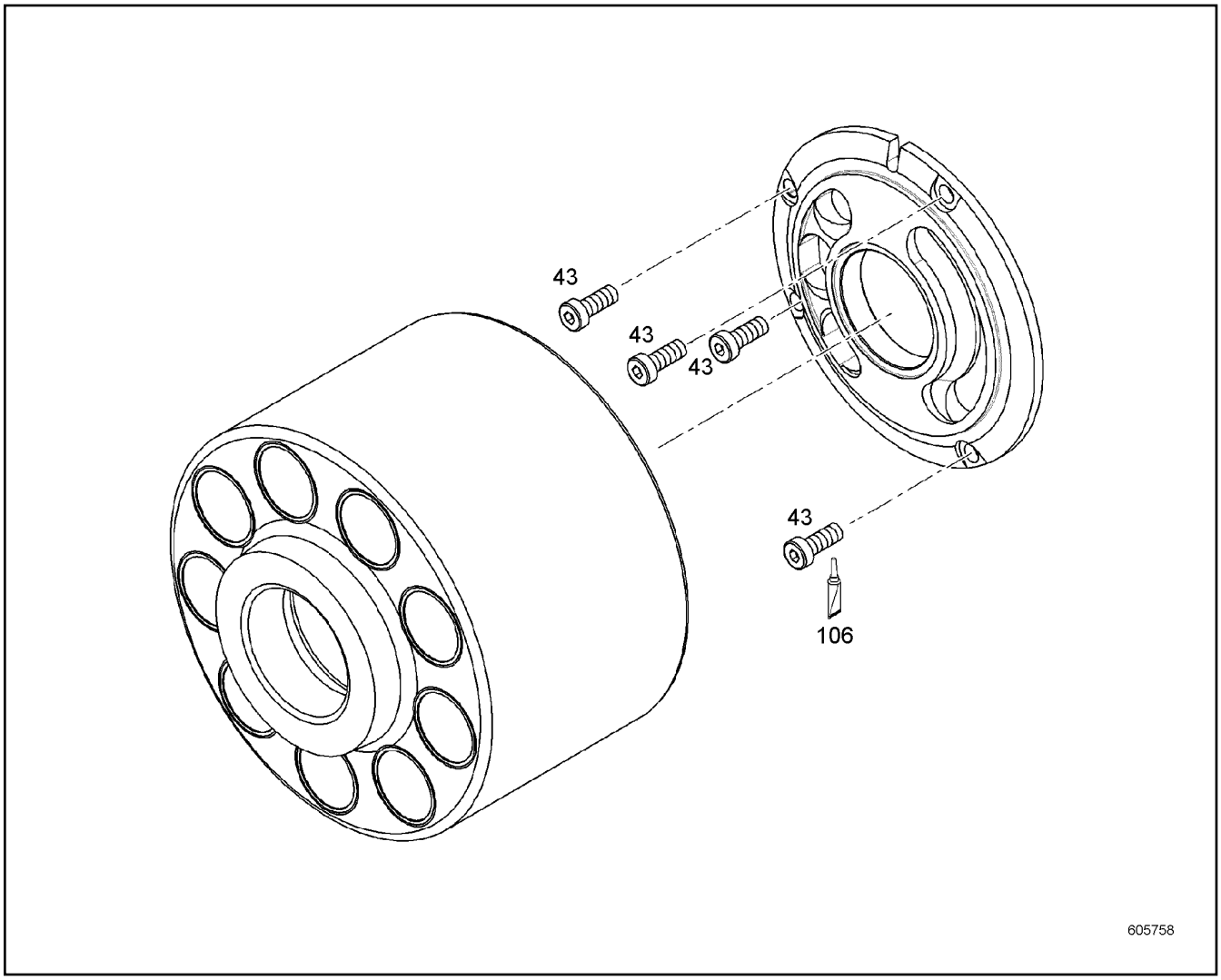

Pos.	Item	Quantity	Description	Bezeichnung	Serie	K
1	9075894	1	CYLINDER WITH BUSHING ⇨ ❑ 107	ZYLINDER MIT BUCHSE		
2	9887035	1	CONTROL PLATE LEFT	STEUERPLATTE LINKS		
43	4981218	4	SOCKET HEAD SCREW ISO 14580 M6X16 10.9	ZYLINDERSCHRAUBE		

OHNE BILD
WITHOUT ILLUSTRATION
SANS PLANCHE
SIN FIG.
SEM ILUSTRAÇÃO
БЕЗ ИЗОБРАЖЕНИЯ

600000

Pos.	Item	Quantity	Description	Bezeichnung	Serie	K
10	9075895	1	CYLINDER	ZYLINDER		
11	9269136	9	BUSHING	BUCHSE		

OHNE BILD
WITHOUT ILLUSTRATION
SANS PLANCHE
SIN FIG.
SEM ILUSTRAÇÃO
БЕЗ ИЗОБРАЖЕНИЯ

600000

Pos.	Item	Quantity	Description	Bezeichnung	Serie	K
10	7380698	1	SUPPORTING WASHER S52X70X0.4 FST	STUETZSCHEIBE		
11	7380697	1	SUPPORTING WASHER S52X70X0.5 FST	STUETZSCHEIBE		
12	7380696	1	SUPPORTING WASHER S52X70X0.6 FST	STUETZSCHEIBE		
13	7380695	1	SUPPORTING WASHER S52X70X0.7 FST	STUETZSCHEIBE		

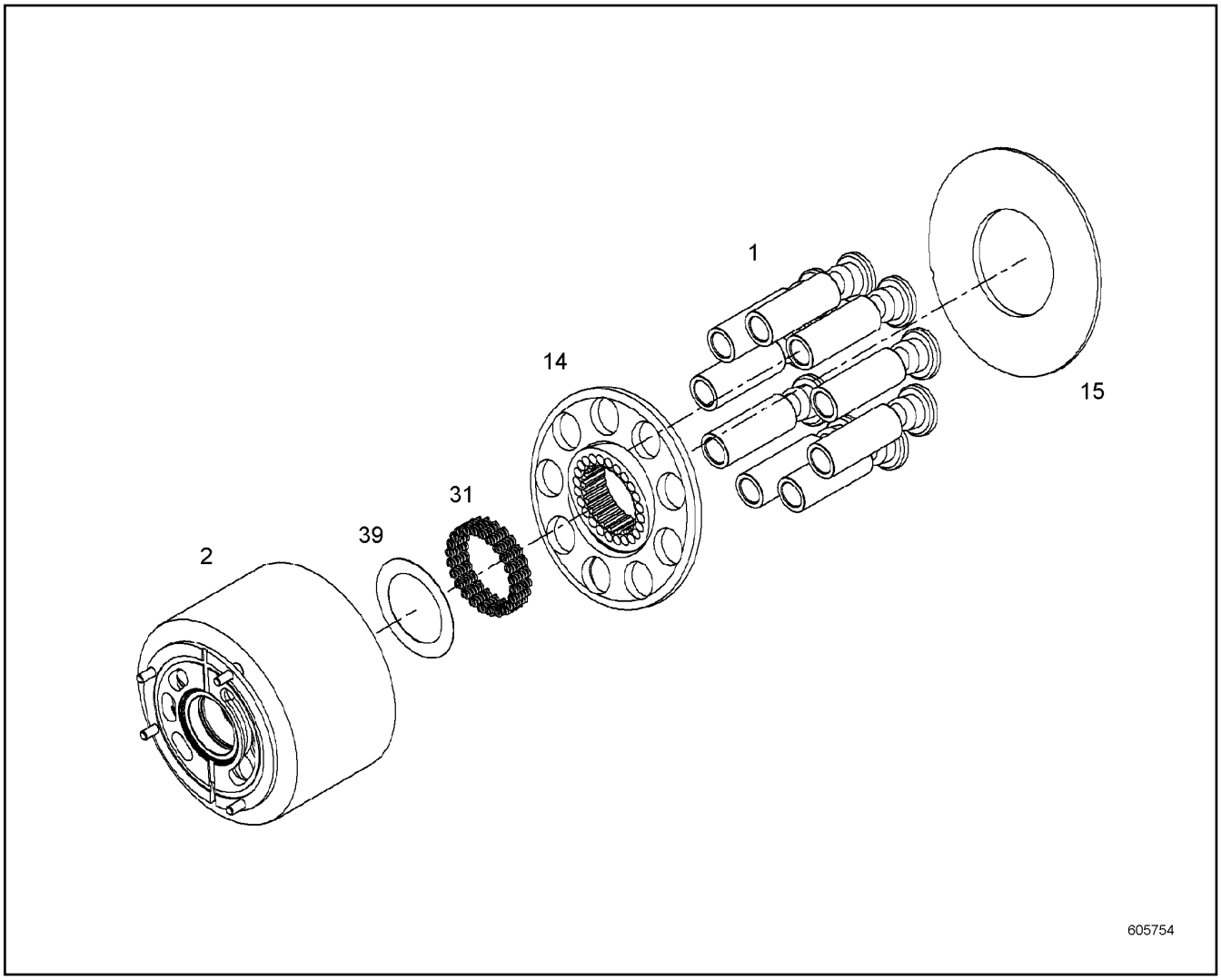

Pos.	Item	Quantity	Description	Bezeichnung	Serie	K
1	9889831	1	RK PISTON WITH GUIDE SHOE	RS KOLBEN MIT GLEITSCHUH		
2	9889832	1	RK CYLINDER+CONTROL PLATE ⇨ ❑ 110	RS ZYLINDER+STEUERPLATTE		
14	9889988	1	RK PULL-BACK BALL+PULL-B.PLATE	RS RUECKZUGKUGEL+RUECKZ.		
15	9889809	1	SLIDING DISC	GLEITSCHEIBE		
31	7382167	24	PRESSURE SPRING	DRUCKFEDER		
39	9885924	1	WASHER SET ⇨ ❑ 108	SCHEIBENSATZ		

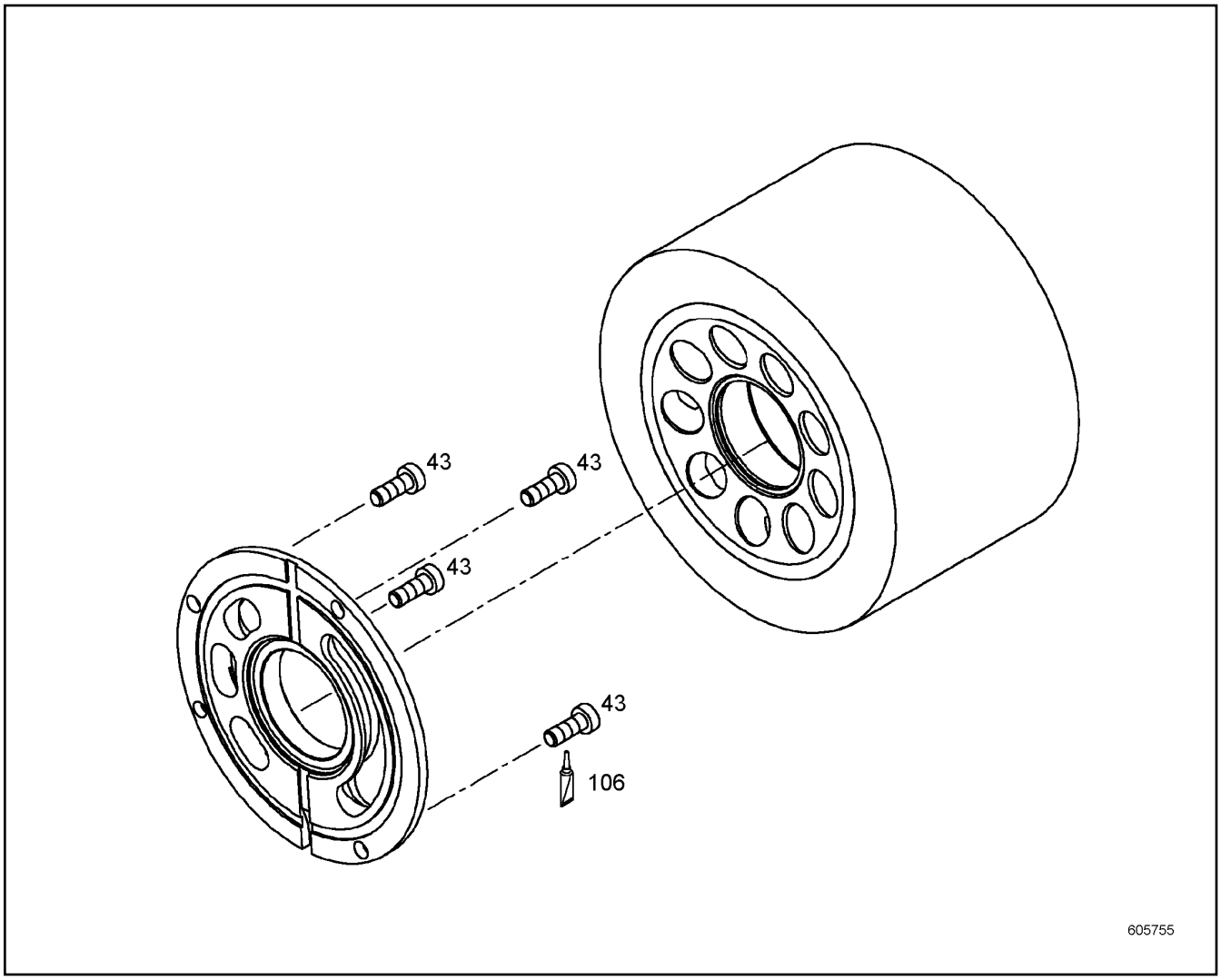

Pos.	Item	Quantity	Description	Bezeichnung	Serie	K
43	4981218	4	SOCKET HEAD SCREW ISO 14580 M6X16 10.9	ZYLINDERSCHRAUBE		
106	8700012	1	SCREW LOCKING	SCHRAUBENSICHERUNG		

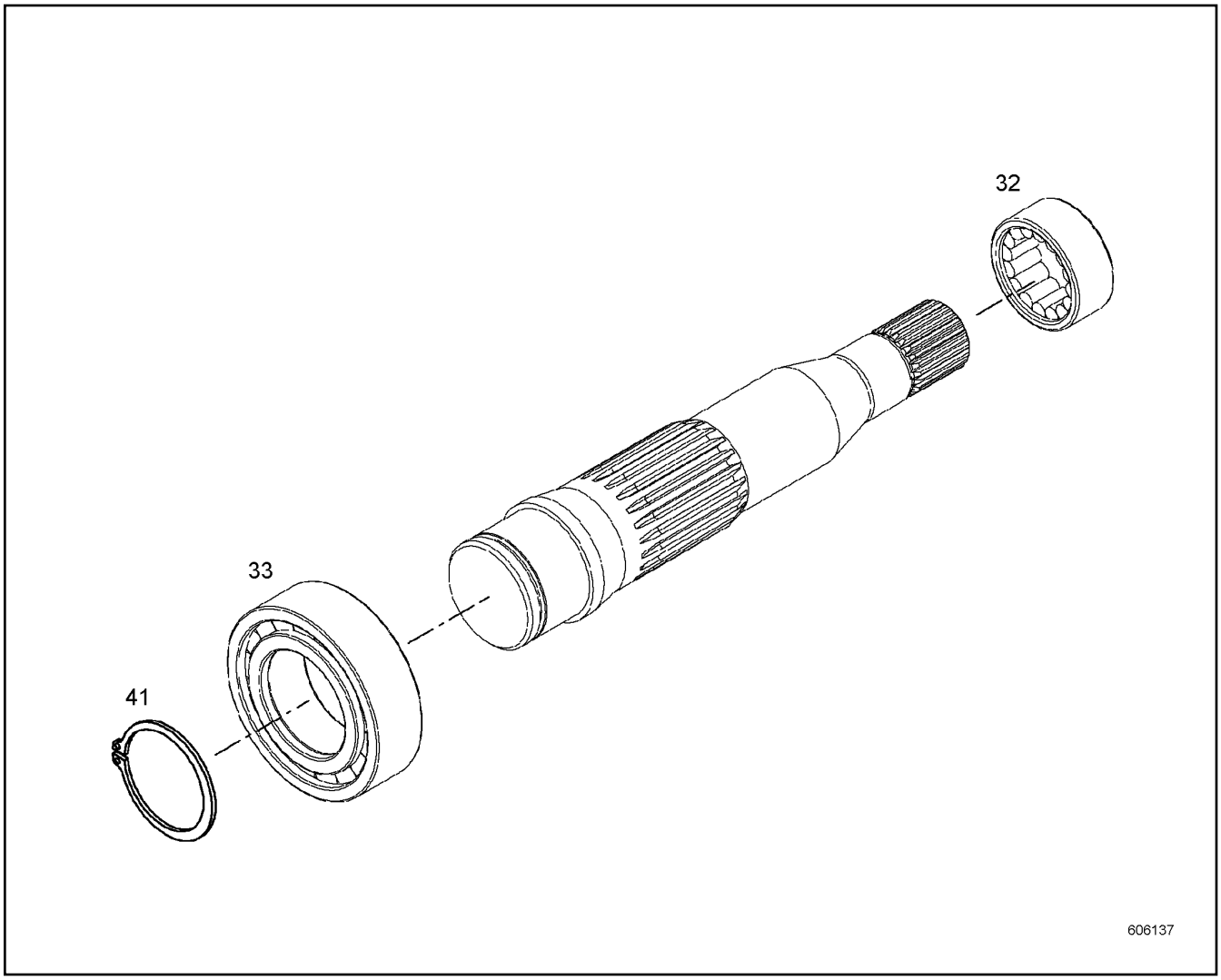

Pos.	Item	Quantity	Description	Bezeichnung	Serie	K
32	7469905	1	CYL.NEEDLE BEARING	ZYLINDERNADELLAGER		
33	7380106	1	CYLINDRICAL ROLLER BEARING	ZYLINDERROLLENLAGER		
41	4280034	1	LOCKING RING DIN 471 50X2	SICHERUNGSRING		

OHNE BILD
WITHOUT ILLUSTRATION
SANS PLANCHE
SIN FIG.
SEM ILUSTRAÇÃO
БЕЗ ИЗОБРАЖЕНИЯ

600000

Pos.	Item	Quantity	Description	Bezeichnung	Serie	K
17	9885628	1	CLOSING RING	VERSCHLUSSRING		
35	10014510	1	ROTARY SHAFT LIP SEAL	RADIALWELLENDICHTRING		
36	7380657	1	O-RING	O-RING		
44	7380531	1	SHIM RING 55X65X1.5 ST	PASSSCHEIBE		
126	8655008	1	GREASE	FETT		

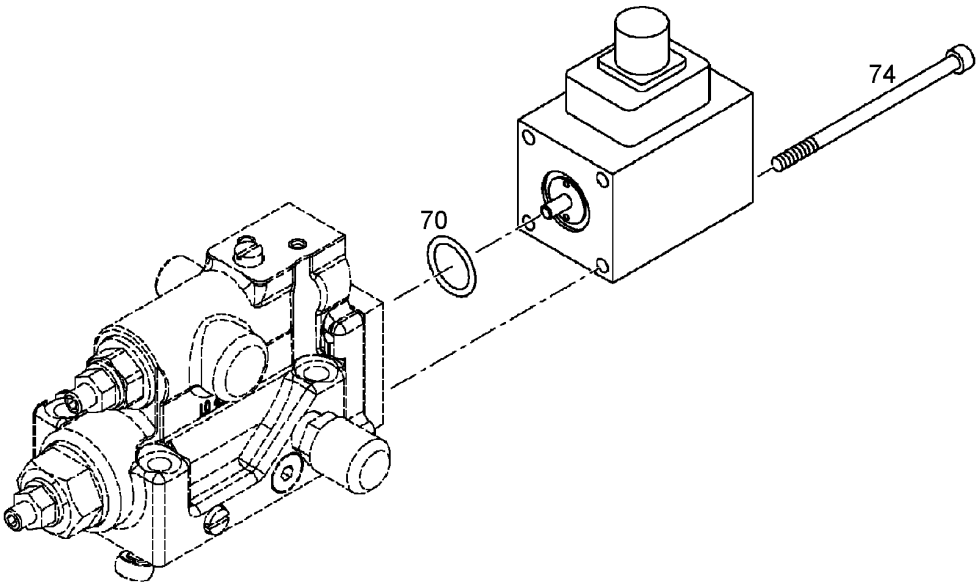

Pos.	Item	Quantity	Description	Bezeichnung	Serie	K
70	7381004	1	O-RING	O-RING		
74	10539462	4	SOCKET HEAD SCREW ISO 4762 M5X85 A4-7	ZYLINDERSCHRAUBE		

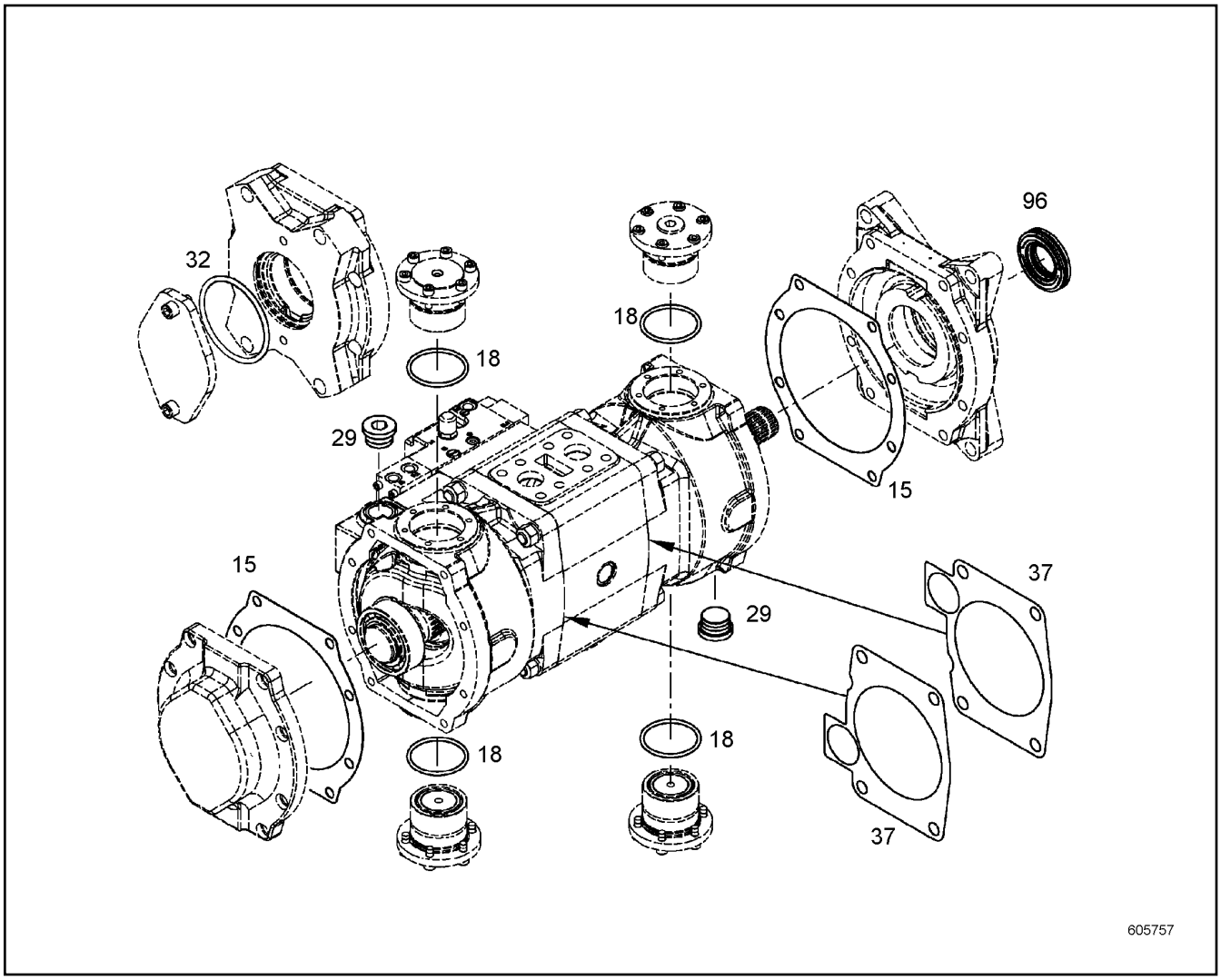

Pos.	Item	Quantity	Description	Bezeichnung	Serie	K
15	9882207	2	SEAL	DICHTUNG		
18	7380656	4	O-RING	O-RING		
29	10137121	2	SCREW PLUG	VERSCHLUSSSCHRAUBE		
32	7004512	1	O-RING	O-RING		
37	9276860	2	FLAT GASKET	FLACHDICHTUNG		
96	9268016	1	REPAIR KIT LOCK RING ⇨ ❑ 112	RS VERSCHLUSSRING		

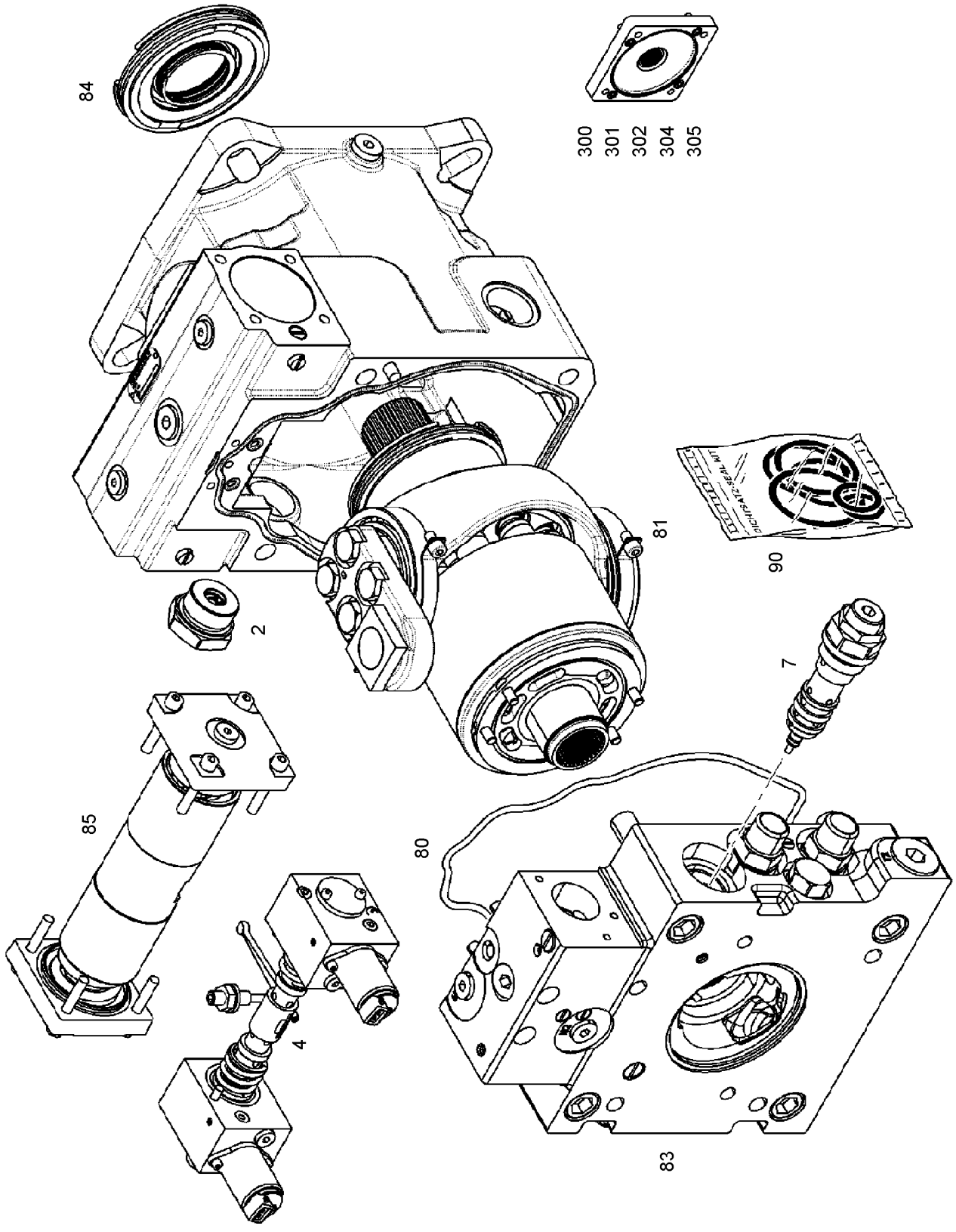
84
300
301
302
304
305
81
90
2
7
85
80
4
83
605748

Pos.	Item	Quantity	Description	Bezeichnung	Serie	K
2	10143665	1	ORIFICE	BLENDE		
4	10141318	1	REGULATING VALVE ⇨ ❑ 117	REGELVENTIL		
7	10127478	1	REGULATING VALVE ⇨ ❑ 120	REGELVENTIL		
80	10122248	1	RK ADDITIONAL PARTS ⇨ ❑ 121	RS ZUSATZTEILE		
81	10138025	1	REPAIR KIT DRIVING MECHANISM ⇨ ❑ 122	RS TRIEBWERK		
83	10141317	1	REPAIR KIT CONNECTING PLATE ⇨ ❑ 128	RS ANSCHLUSSPLATTE		
84	10138032	1	REPAIR KIT LOCK RING ⇨ ❑ 132	RS VERSCHLUSSRING		
85	10122262	1	REGULATION REPAIR KIT ⇨ ❑ 133	RS VERSTELLUNG		
90	10138033	1	SEAL KIT CPL. ⇨ ❑ 134	DICHTSATZ KPL.		
300	10129874	1	THROUGH DRIVE ⇨ ❑ 137	DURCHTRIEB		
301	10130005	1	THROUGH DRIVE ⇨ ❑ 138	DURCHTRIEB		
302	10132357	1	CONSTRUCTION KIT OUTPUT ⇨ ❑ 139	ANBAUSATZ DURCHTRIEB		
304	10134521	1	THROUGH DRIVE ⇨ ❑ 140	DURCHTRIEB		
305	10138068	1	CONSTRUCTION KIT OUTPUT ⇨ ❑ 141	ANBAUSATZ DURCHTRIEB		

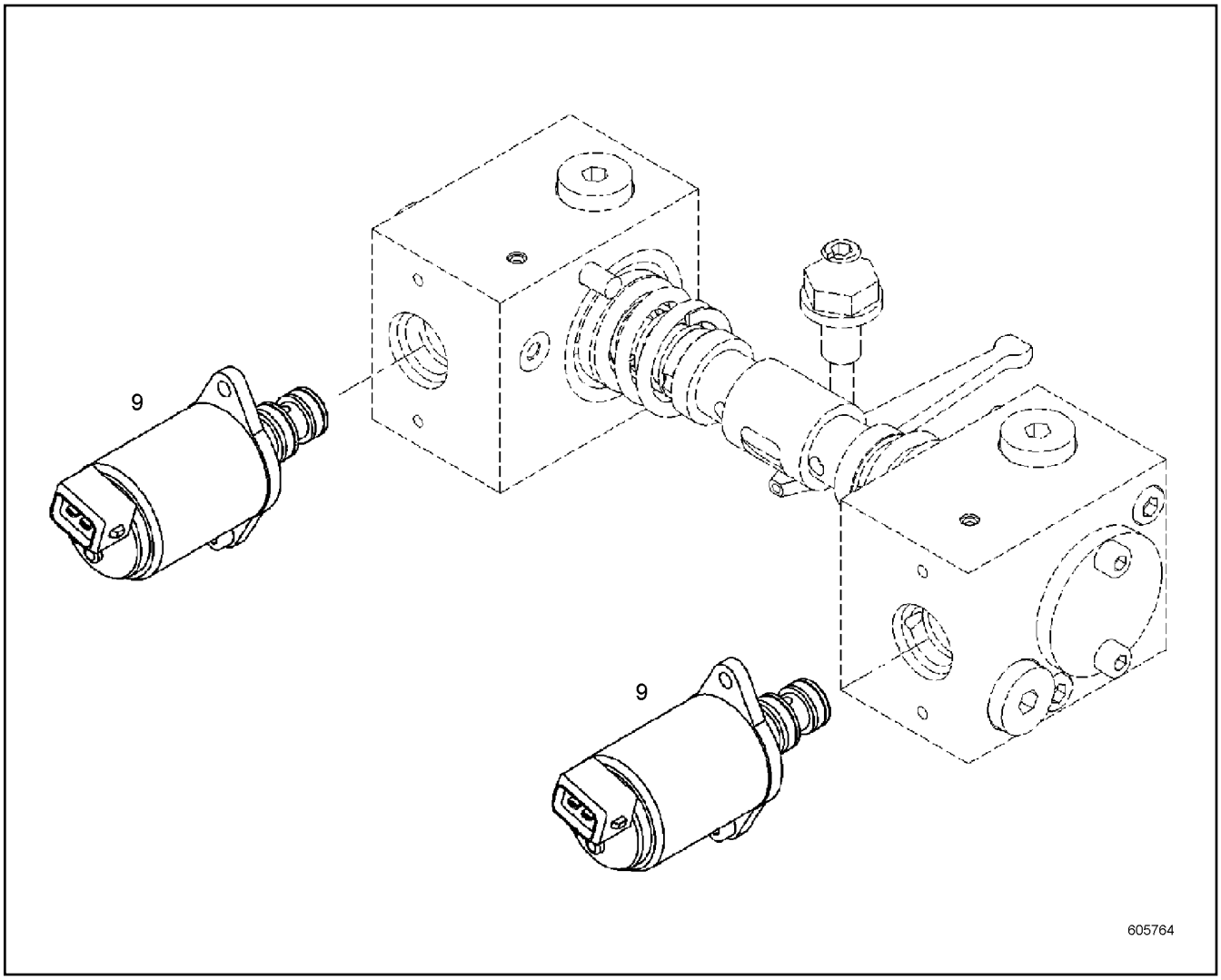

Pos.	Item	Quantity	Description	Bezeichnung	Serie	K
9	10129420	2	PRESSURE REDUCTION VALVE ⇨ ❑ 118	DRUCKREDUZIERVENTIL		

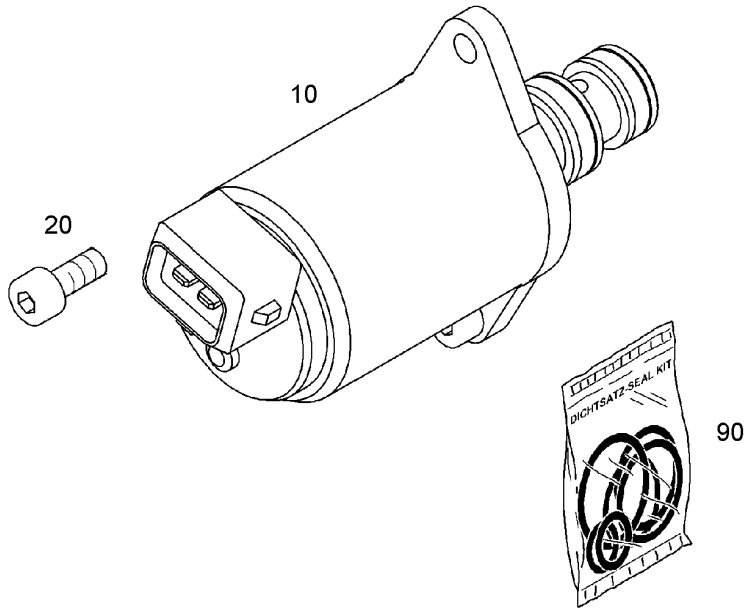

Pos.	Item	Quantity	Description	Bezeichnung	Serie	K
10	10135472	1	PRESSURE FEEDER VALVE	DRUCKEINSPEISEVENTIL		
20	10228541	2	SOCKET HEAD SCREW ISO 4762 M4X10 10.9	ZYLINDERSCHRAUBE		
90	10123214	1	SEAL KIT PRESSUR.CONTROL VALVE ⇨ ❑ 119	DS DRUCKREDUZIERVENTIL		

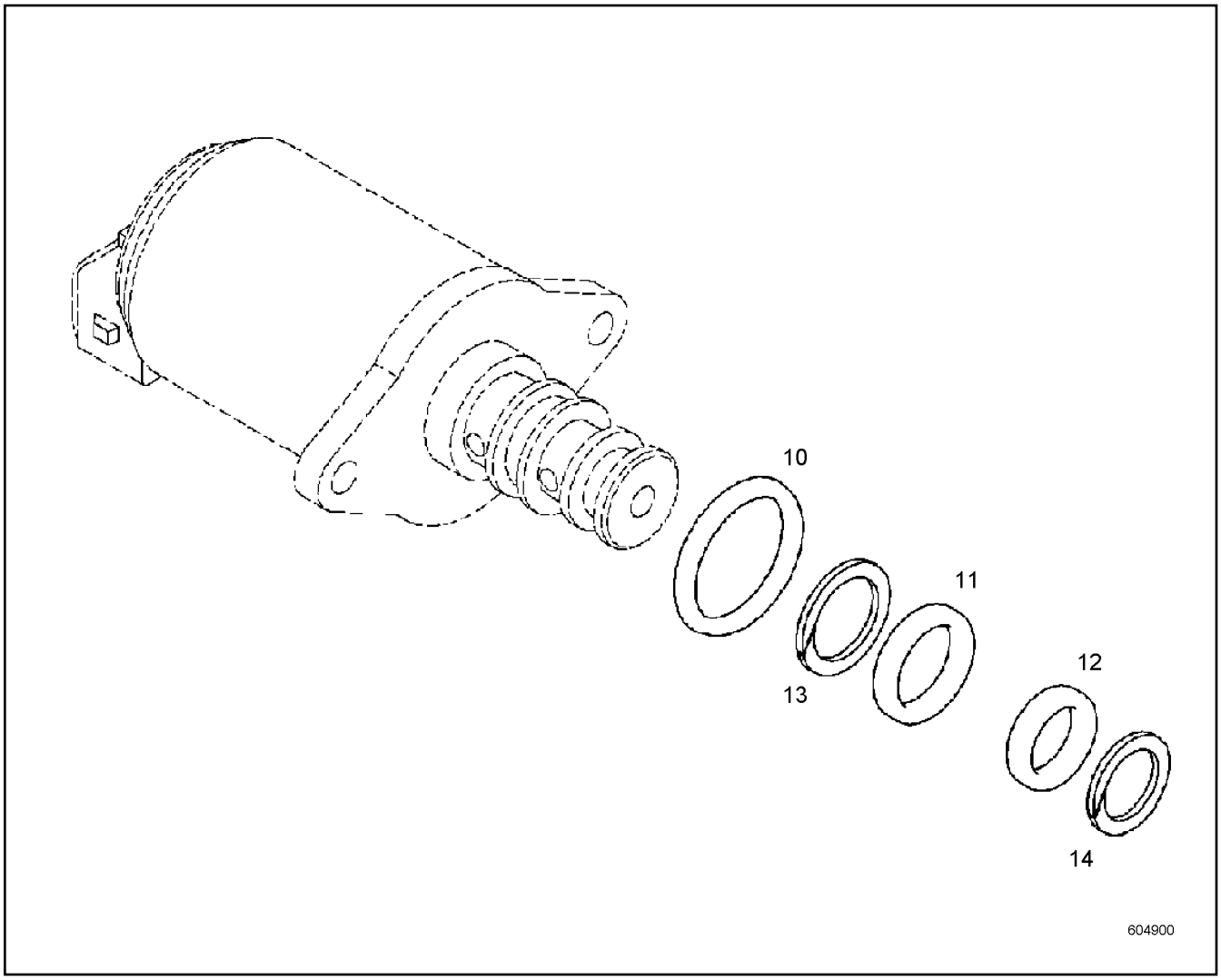

Pos.	Item	Quantity	Description	Bezeichnung	Serie	K
10	7381440	1	O-RING	O-RING		
11	7381439	1	O-RING	O-RING		
12	7381438	1	O-RING	O-RING		
13	11007751	1	BACK-UP RING CUT	STUETZRING GESCHL.		
14	11007749	1	BACK-UP RING CUT	STUETZRING GESCHL.		

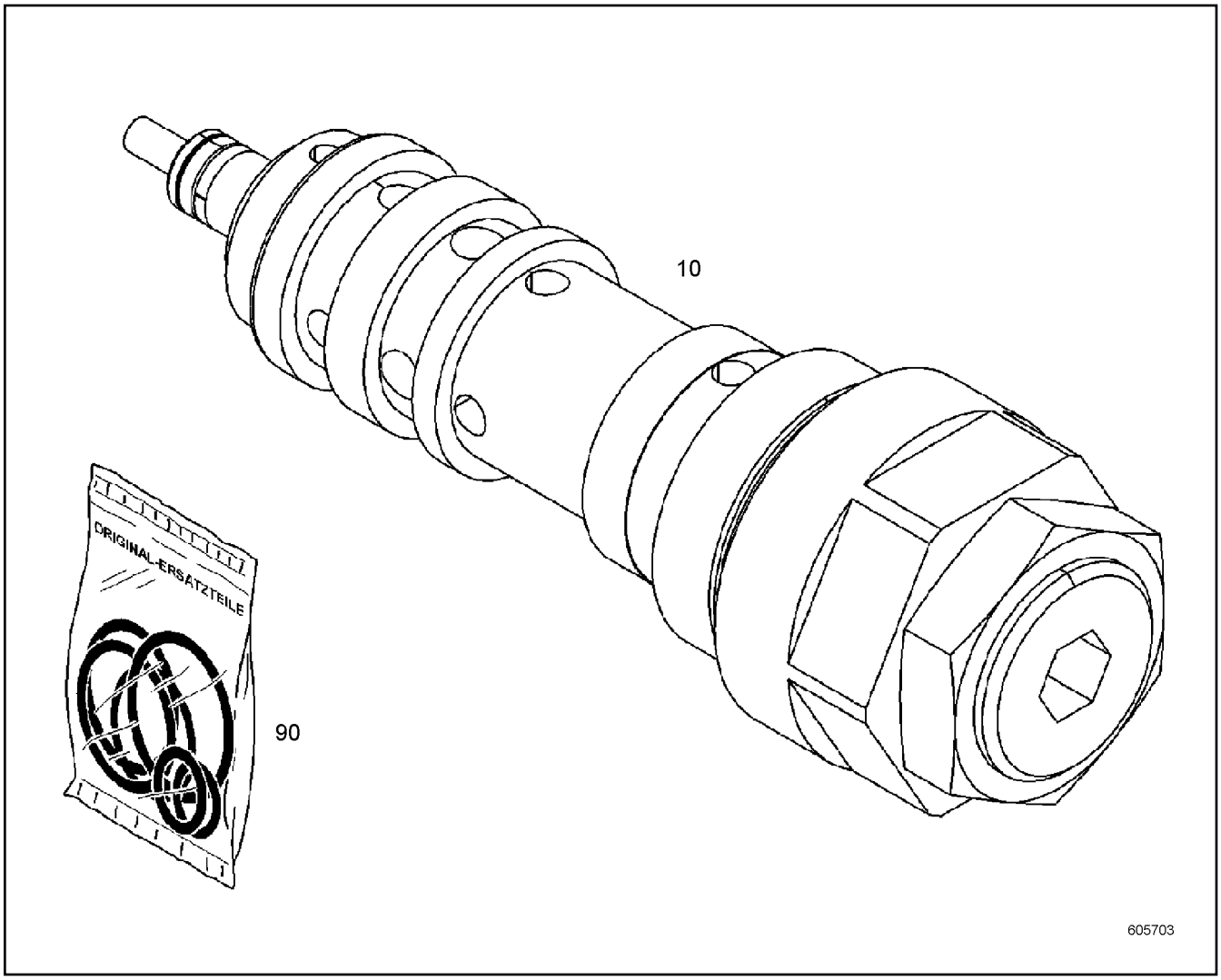

Pos.	Item	Quantity	Description	Bezeichnung	Serie	K
10	10127479	1	REGULATING VALVE	REGELVENTIL		

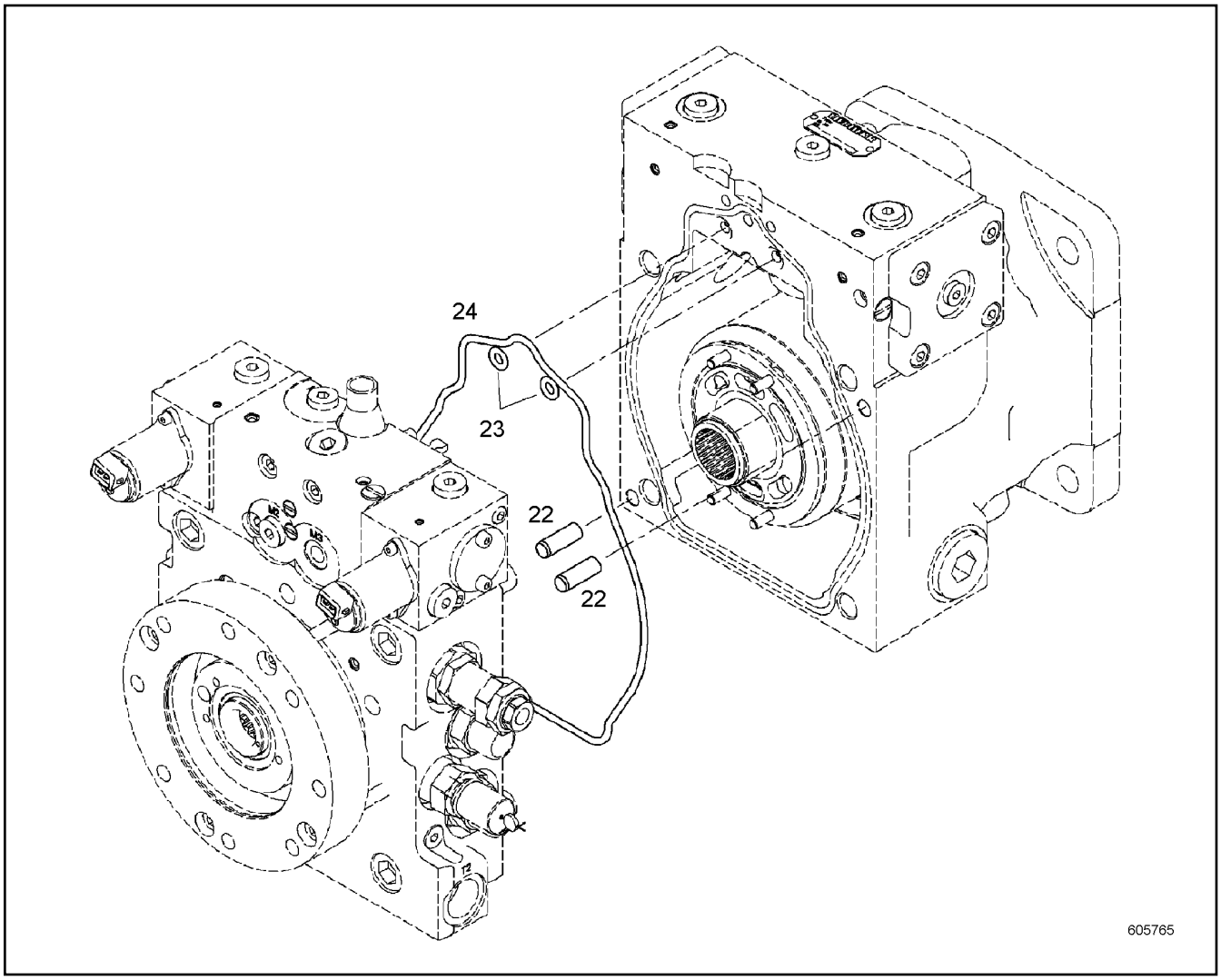

Pos.	Item	Quantity	Description	Bezeichnung	Serie	K
22	4981077	2	PARALLEL PIN ISO 8734 10M6X30 ST	ZYLINDERSTIFT		
23	7381013	2	O-RING	O-RING		
24	10002309	1	O-RING	O-RING		

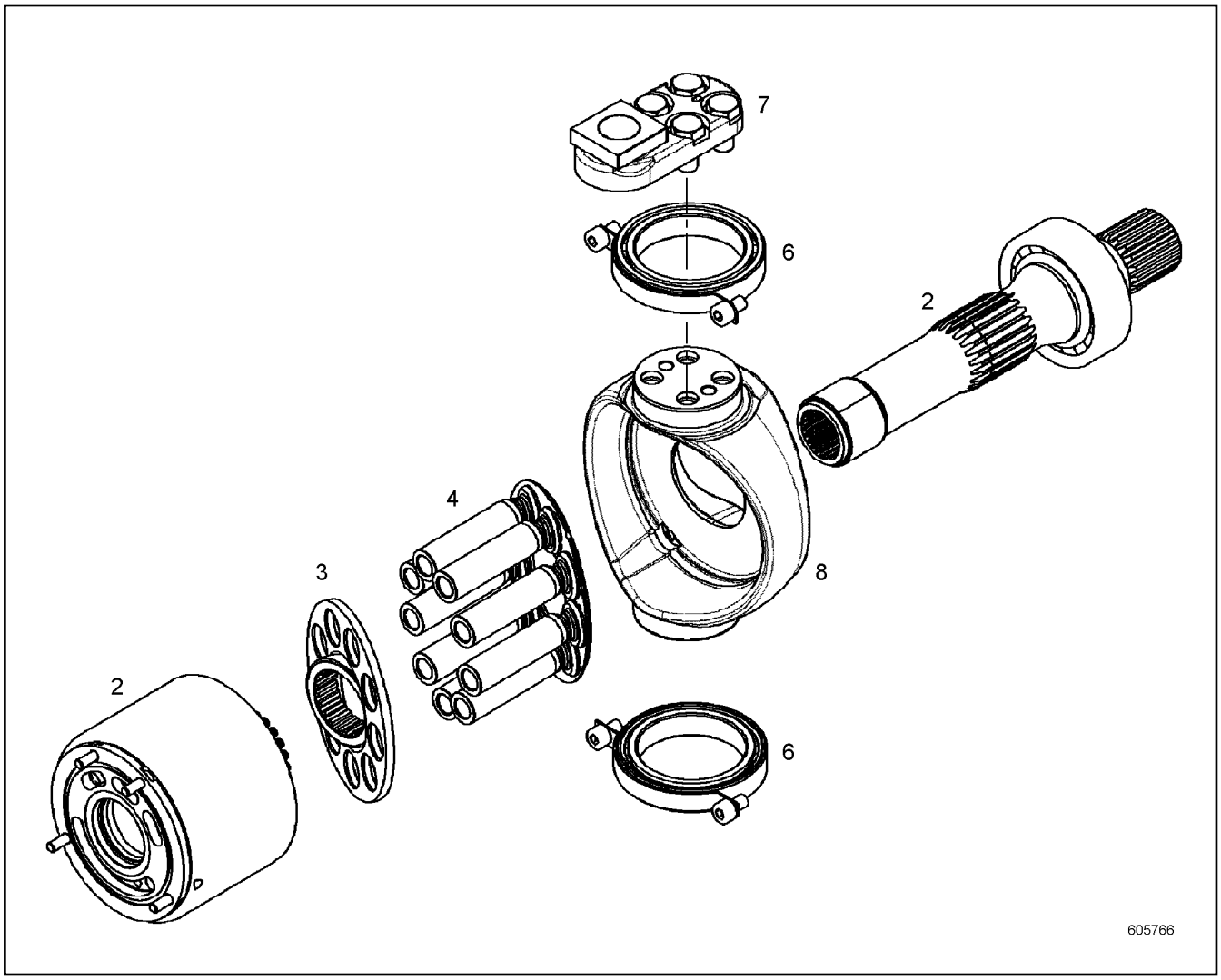

Pos.	Item	Quantity	Description	Bezeichnung	Serie	K
2	10138026	1	RK CYL.+CONTROL PLATE+SHAFT ⇨ ❑ 123	RS ZYL.+STEUERPL.+WELLE		
3	9078214	1	RK PULL-BACK BALL+PULL-B.PLATE	RS RUECKZUGKUGEL+RUECKZ.		
4	10122692	1	RK PISTON WITH GUIDE SHOE	RS KOLBEN MIT GLEITSCHUH		
6	10143607	1	REPAIR SET SWIVEL BEARING ⇨ ❑ 126	RS SCHWENKLAGER		
7	10122245	1	REPAIR KIT LEVER ⇨ ❑ 127	RS HEBEL		
8	10122246	1	REPAIR SET SWIVEL YOKE	RS SCHWENKJOCH		

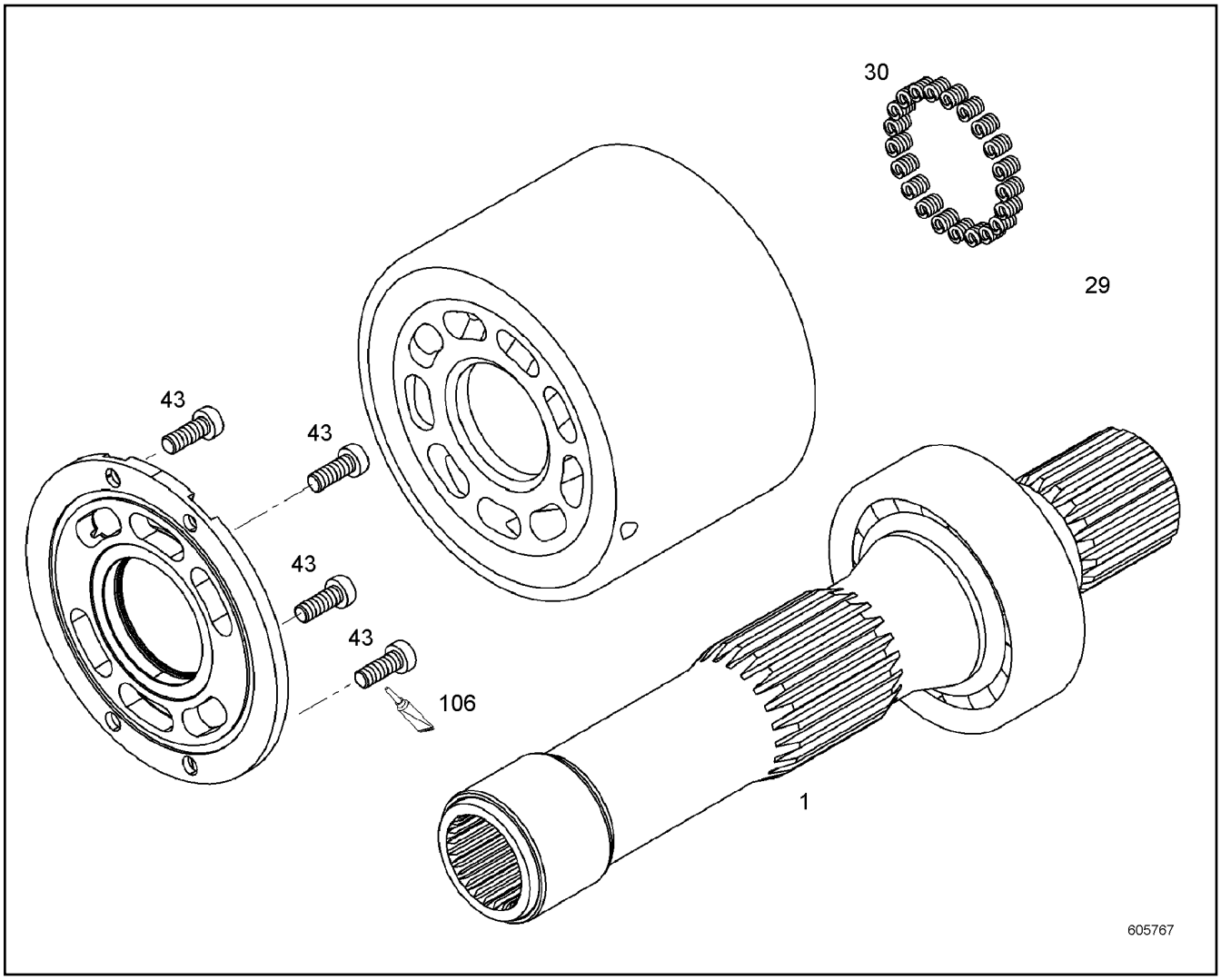

Pos.	Item	Quantity	Description	Bezeichnung	Serie	K
1	10138027	1	REPAIR KIT SHAFT ⇨ ❑ 124	RS WELLE		
29	9885937	1	WASHER SET ⇨ ❑ 125	SCHEIBENSATZ		
30	7381699	21	PRESSURE SPRING	DRUCKFEDER		
43	10137839	4	TALLOW-DROP SCREW 10.9	LINSENKOPFSCHRAUBE		
106	7016208	1	OMNIFIT	OMNIFIT		

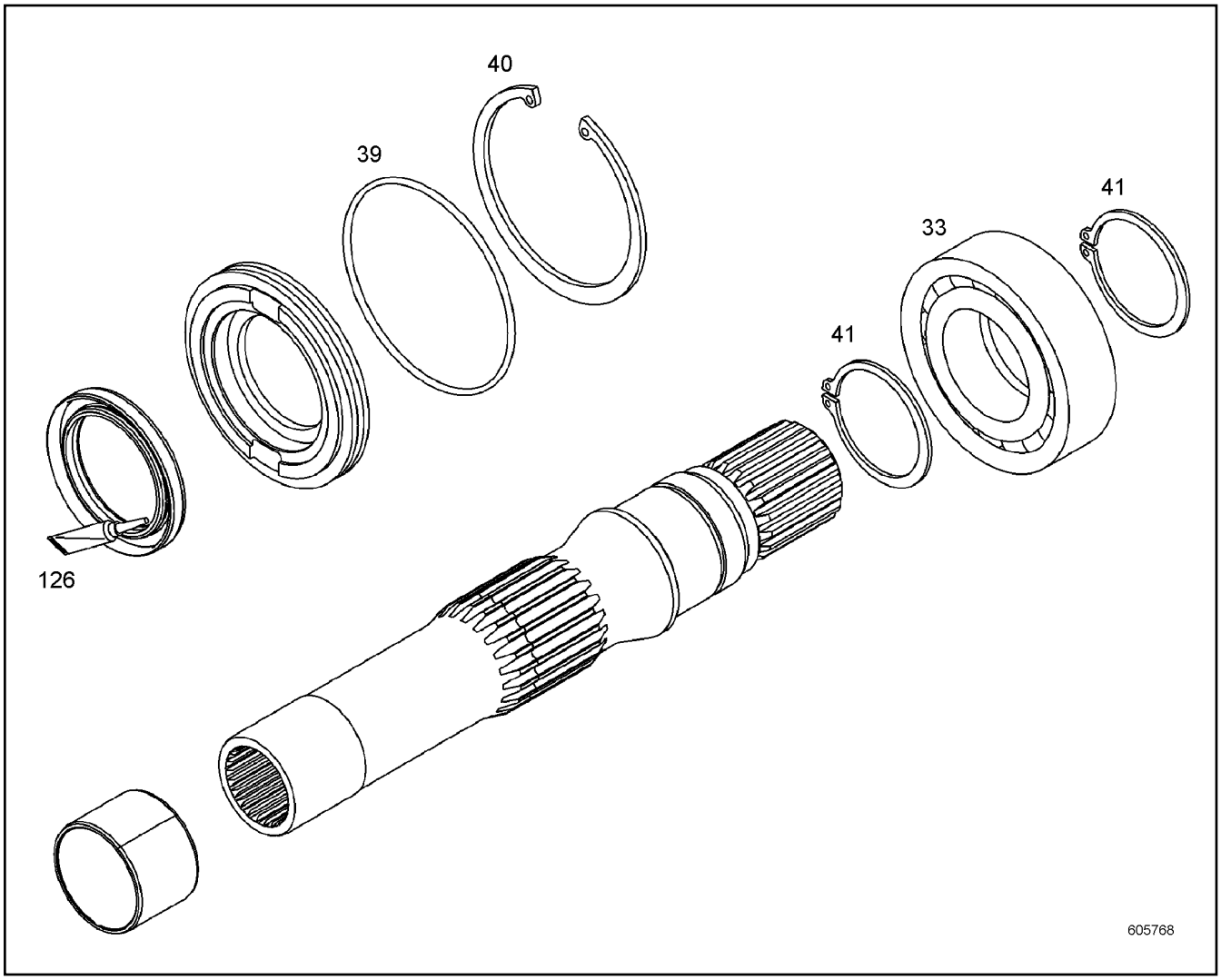

Pos.	Item	Quantity	Description	Bezeichnung	Serie	K
33	7380070	1	CYLINDRICAL ROLLER BEARING	ZYLINDERROLLENLAGER		
39	7380297	1	O-RING	O-RING		
40	4281017	1	LOCKING RING DIN 472	SICHERUNGSRING		
41	4280032	2	LOCKING RING DIN 471 45X1.75	SICHERUNGSRING		
126	8655008	1	GREASE	FETT		

OHNE BILD
WITHOUT ILLUSTRATION
SANS PLANCHE
SIN FIG.
SEM ILUSTRAÇÃO
БЕЗ ИЗОБРАЖЕНИЯ

600000

Pos.	Item	Quantity	Description	Bezeichnung	Serie	K
10	10123256	2	SUPPORTING WASHER 45X56X0.3	STUETZSCHEIBE		
11	10123257	2	SUPPORTING WASHER 45X56X0.4	STUETZSCHEIBE		
12	10123258	2	SUPPORTING WASHER 45X56X0.5	STUETZSCHEIBE		

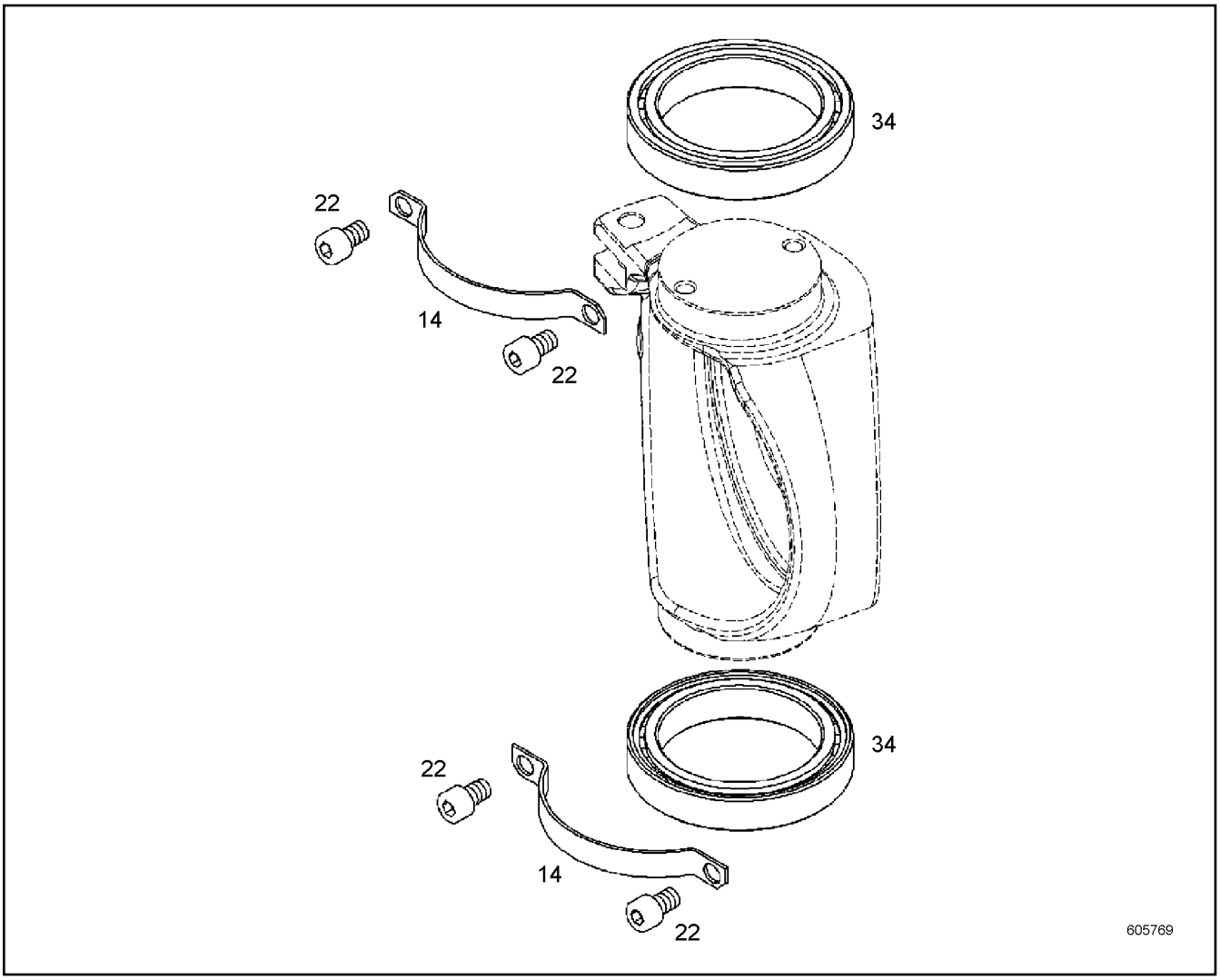

Pos.	Item	Quantity	Description	Bezeichnung	Serie	K
14	9887948	2	BEARING HOLDER	LAGERHALTER		
22	10219869	4	SOCKET HEAD SCREW ISO 4762 M8X12 8.8	ZYLINDERSCHRAUBE		
34	11490216	2	CYL ROLLER BEARING	ZYL ROLLENLAGER		

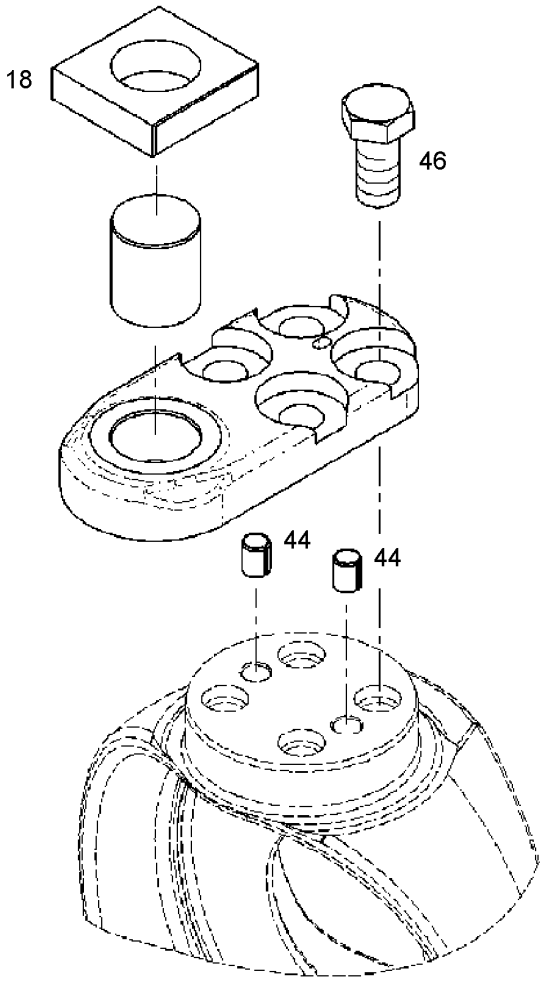

Pos.	Item	Quantity	Description	Bezeichnung	Serie	K
18	9076196	1	GROOVING BLOCK	NUTENSTEIN		
44	4980638	2	DOWEL PIN ISO 13337 8X10 ST	SPANNSTIFT		
46	4980977	4	HEX SCREW ISO 4017 M12X25 10.9	SECHSKANTSCHRAUBE		

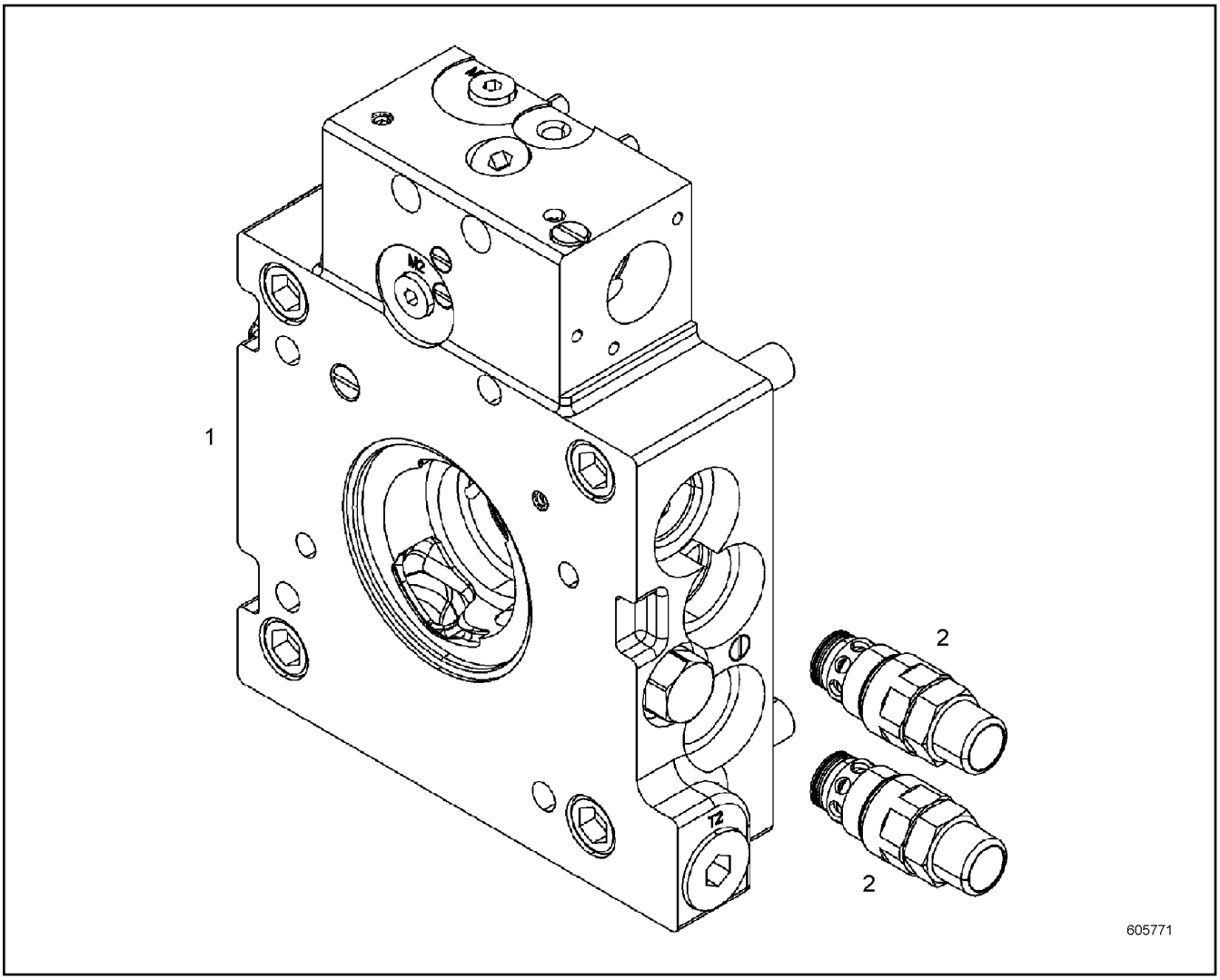

Pos.	Item	Quantity	Description	Bezeichnung	Serie	K
1	10141316	1	TERMINAL BOARD PRE-ASS. ⇨ ❑ 129	ANSCHLUSSPLATTE VORM.		
2	10123236	2	PRESSURE FEEDER VALVE ⇨ ❑ 131	DRUCKEINSPEISEVENTIL		

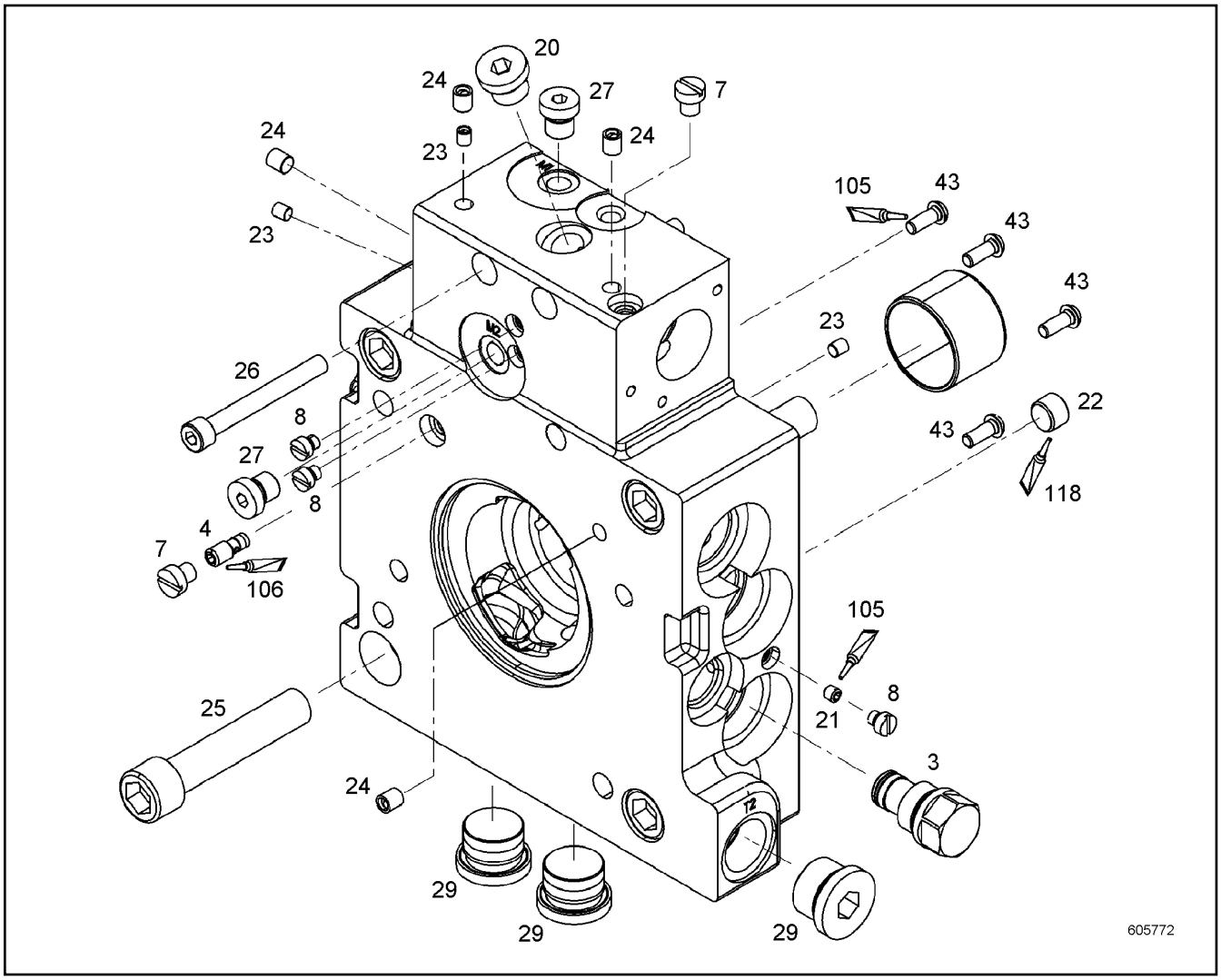

Pos.	Item	Quantity	Description	Bezeichnung	Serie	K
3	10123528	1	STOP PLUG ⇨ ❑ 130	STOPFEN		
4	10124239	1	SHUTTLE VALVE	WECHSELVENTIL		
7	9881609	2	SCREW PLUG M8X1	VERSCHLUSSSCHRAUBE		
8	9268441	5	SCREW PLUG M6	VERSCHLUSSSCHRAUBE		
20	10137312	1	SCREW PLUG	VERSCHLUSSSCHRAUBE		
21	4980082	1	GRUB SCREW DIN 913 M6X6 45H	GEWINDESTIFT		
22	403900501	1	SCREW PLUG DIN 906 ST	VERSCHLUSSSCHRAUBE		
23	7380490	2	SEALING PLUG	DICHTSTOPFEN		
24	7008121	4	SEALING PLUG	DICHTSTOPFEN		
25	10017870	4	SOCKET HEAD SCREW ISO 4762 M16X80 10.9	ZYLINDERSCHRAUBE		
26	11170484	2	SOCKET HEAD SCREW ISO 4762 M8X70 10.9	ZYLINDERSCHRAUBE		
27	10137115	2	SCREW PLUG	VERSCHLUSSSCHRAUBE		
29	10137108	3	SCREW PLUG	VERSCHLUSSSCHRAUBE		
43	10137839	4	TALLOW-DROP SCREW 10.9	LINSENKOPFSCHRAUBE		
105	8655016	1	SCREW LOCKING	SCHRAUBENSICHERUNG		
106	7016208	1	OMNIFIT	OMNIFIT		
118	811208201	1	GLUE	KLEBSTOFF		

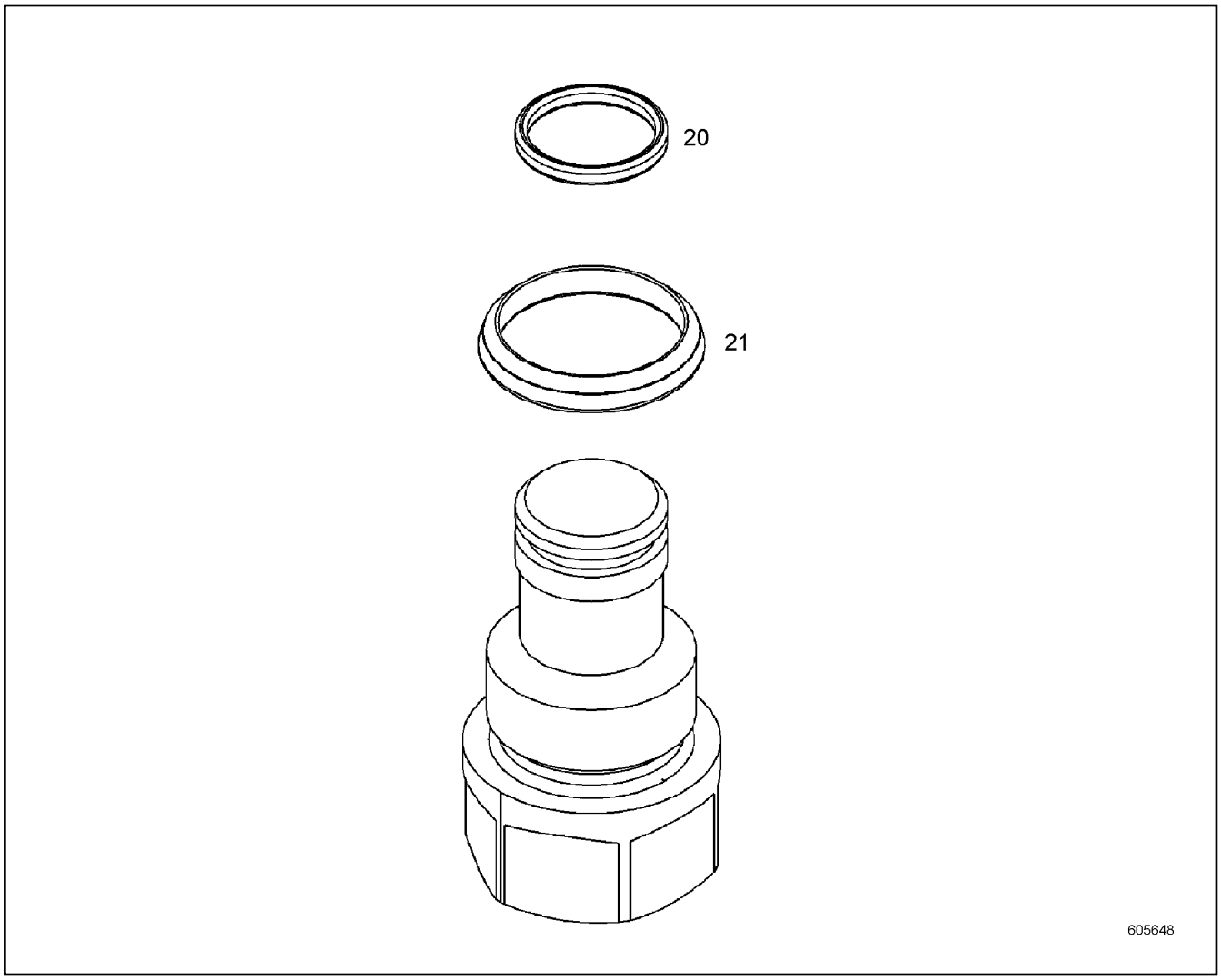

Pos.	Item	Quantity	Description	Bezeichnung	Serie	K
20	7381128	1	O-RING	O-RING		
21	7381127	1	O-RING	O-RING		

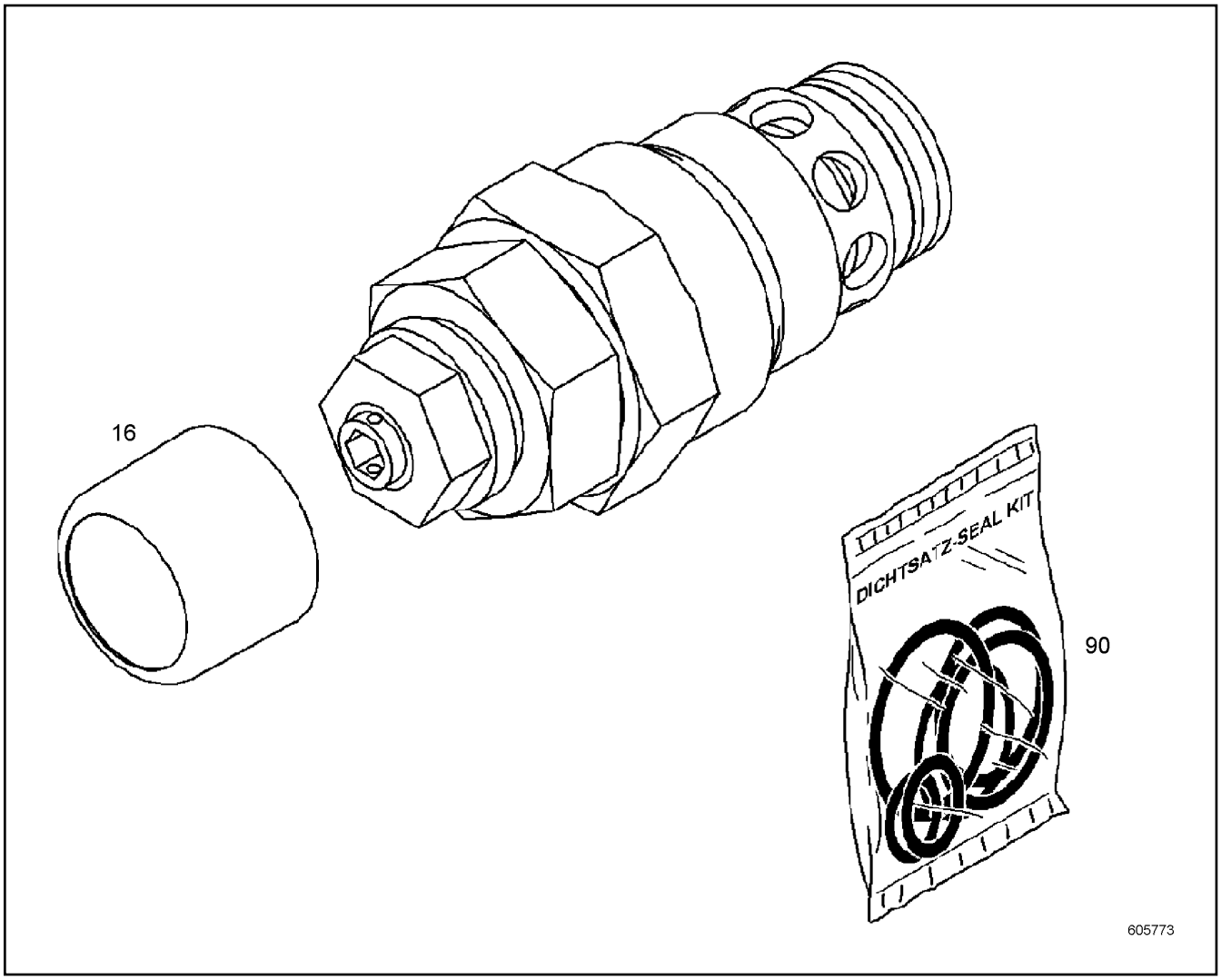

Pos.	Item	Quantity	Description	Bezeichnung	Serie	K
16	10801869	1	PROTECTING CAP	SCHUTZKAPPE		
90	10332095	1	SEAL KIT PRESSURE VALVE	DS DRUCKVENTIL		

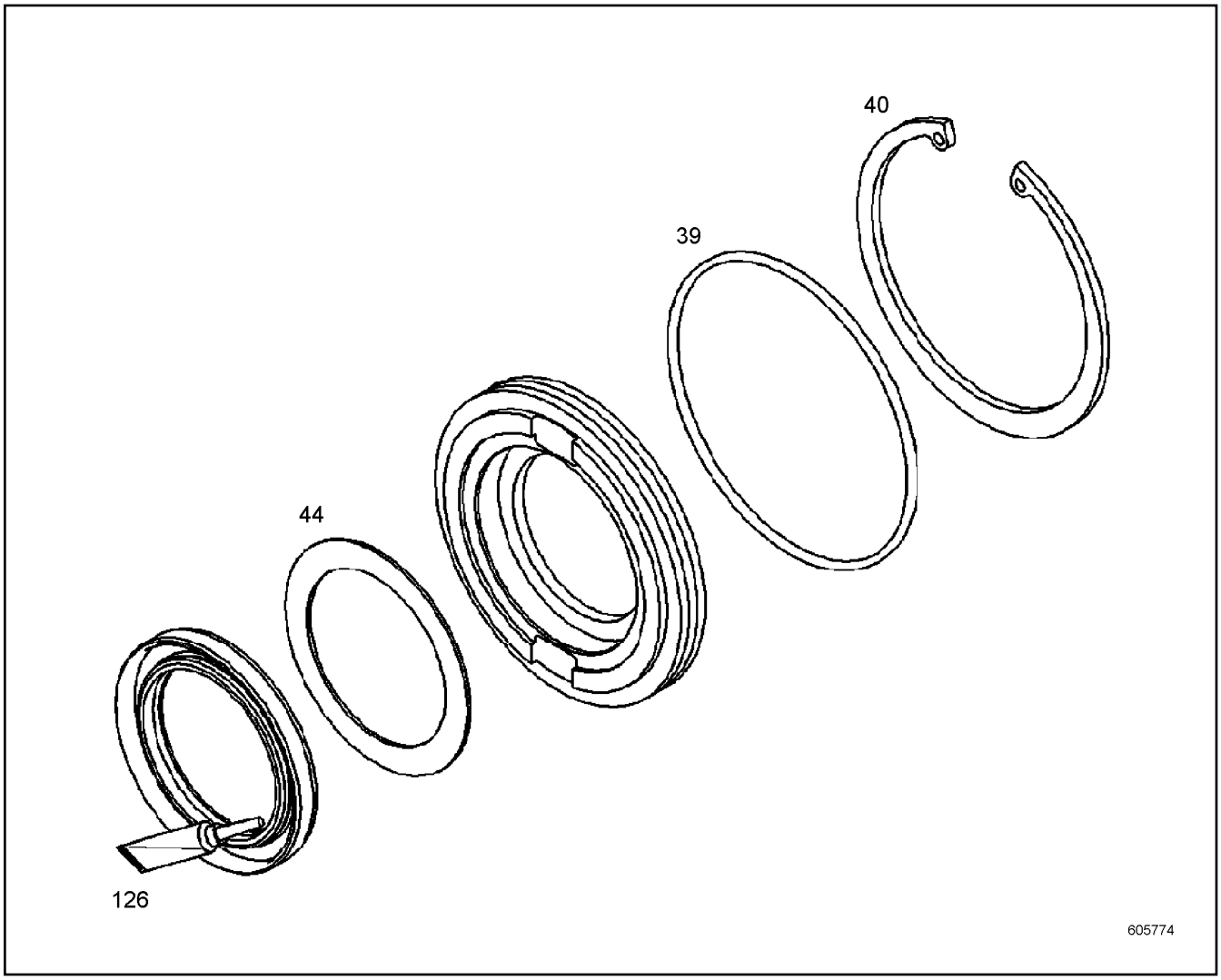

Pos.	Item	Quantity	Description	Bezeichnung	Serie	K
39	7380297	1	O-RING	O-RING		
40	4281017	1	LOCKING RING DIN 472	SICHERUNGSRING		
44	4002229	1	SHIM RING DIN 988 50X62X1.5	PASSSCHEIBE		
126	8655008	1	GREASE	FETT		

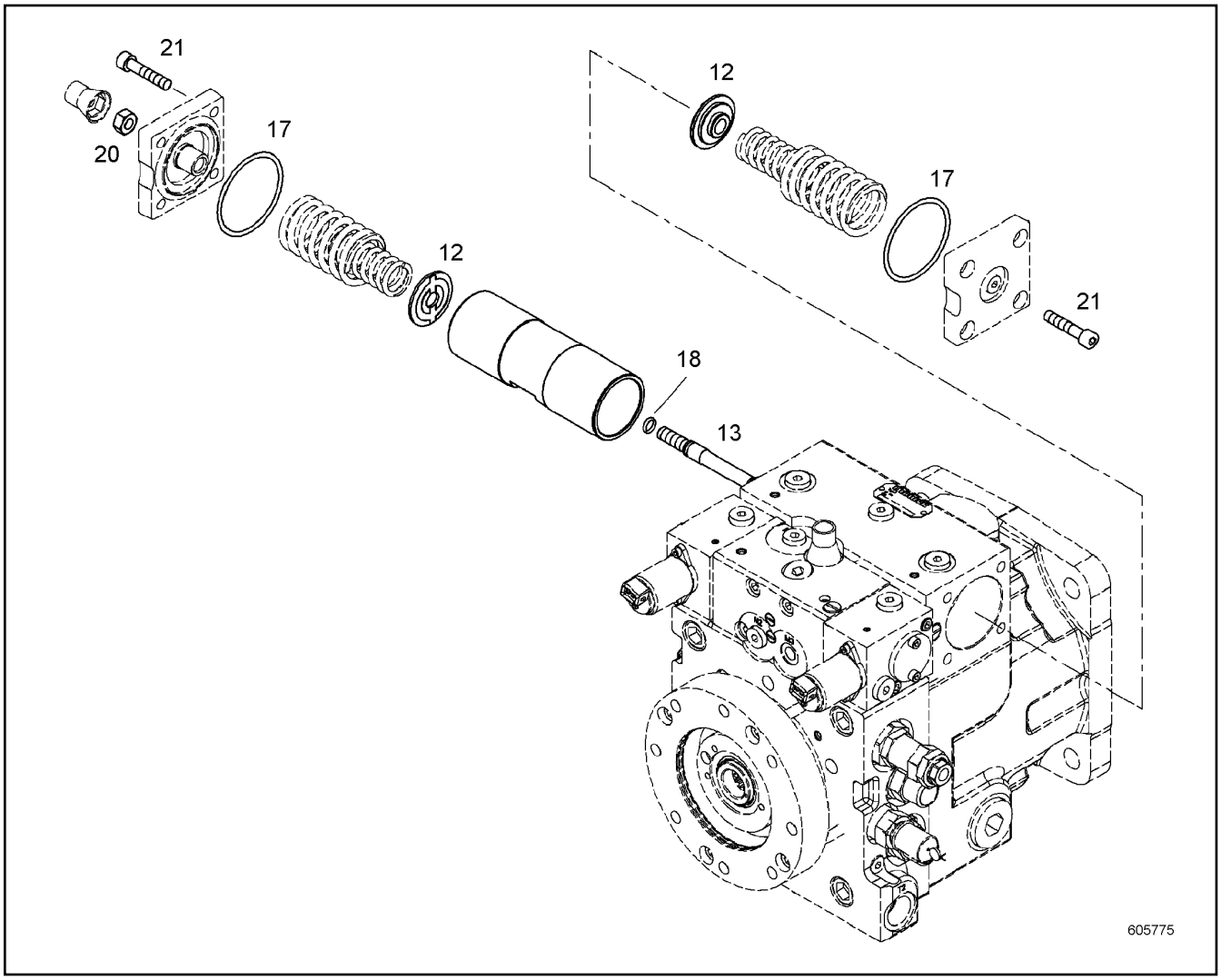

Pos.	Item	Quantity	Description	Bezeichnung	Serie	K
12	9076178	2	SPRING SUPPORT	FEDERTELLER		
13	9076176	1	CHECK SCREW M10X101 31CRMOV9;DIN EN	STELLSCHRAUBE		
17	10016874	2	O-RING	O-RING		
18	7380574	1	O-RING	O-RING		
20	4980986	1	HEX NUT ISO 8673 8	SECHSKANTMUTTER		
21	4980920	8	SOCKET HEAD SCREW ISO 4762 M8X40 10.9	ZYLINDERSCHRAUBE		

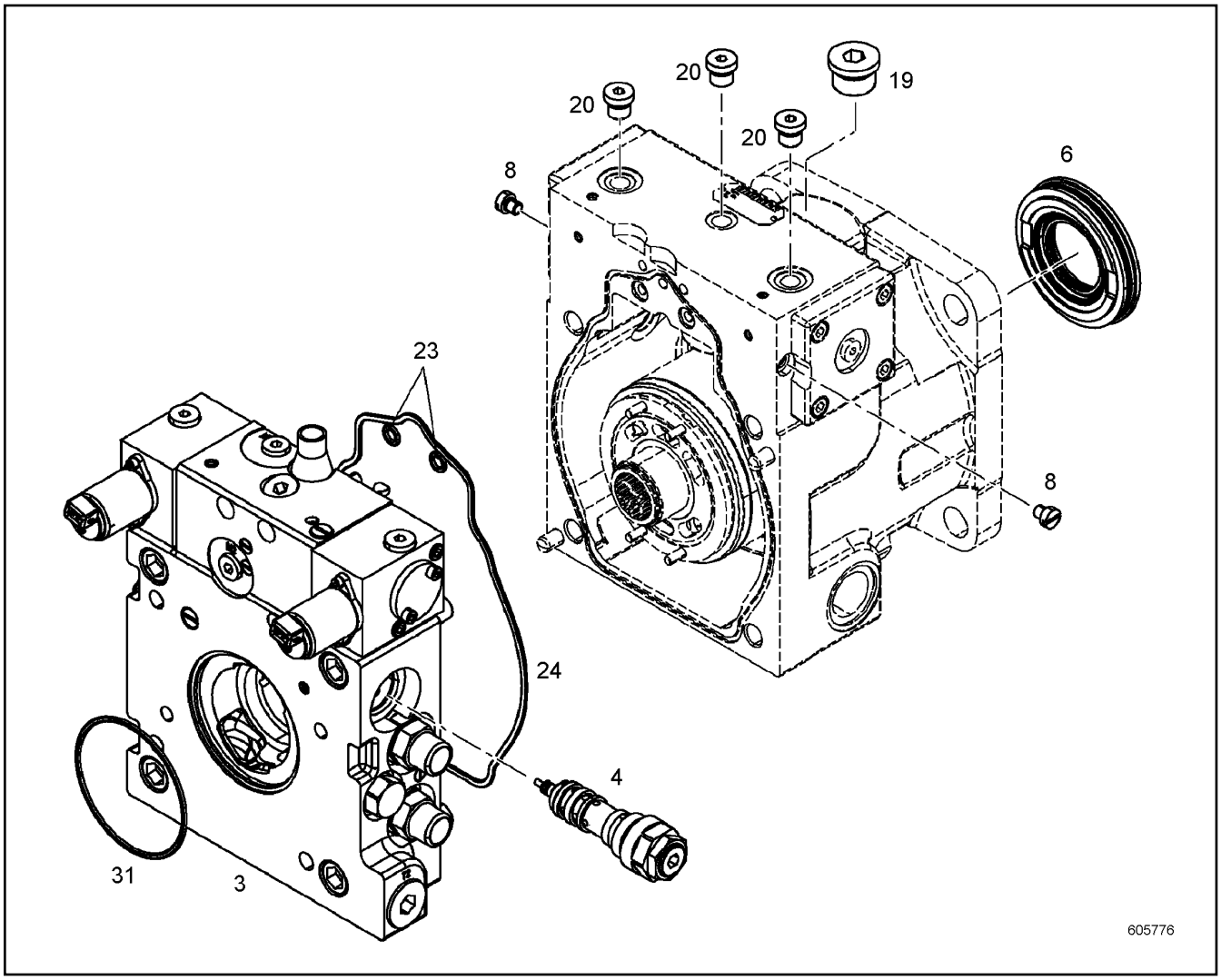

Pos.	Item	Quantity	Description	Bezeichnung	Serie	K
3	10138034	1	GASKET KIT INT.FLANGE ⇨ ❑ 135	DS ANSCHLUSSPLATTE		
4	10122265	1	SEAL KIT REGULATING VALVE ⇨ ❑ 136	DS REGELVENTIL		
6	10138032	1	REPAIR KIT LOCK RING ⇨ ❑ 132	RS VERSCHLUSSRING		
8	9881609	2	SCREW PLUG M8X1	VERSCHLUSSSCHRAUBE		
19	10137108	1	SCREW PLUG	VERSCHLUSSSCHRAUBE		
20	10137113	3	SCREW PLUG	VERSCHLUSSSCHRAUBE		
23	7381013	2	O-RING	O-RING		
24	10002309	1	O-RING	O-RING		
31	7380297	1	O-RING	O-RING		

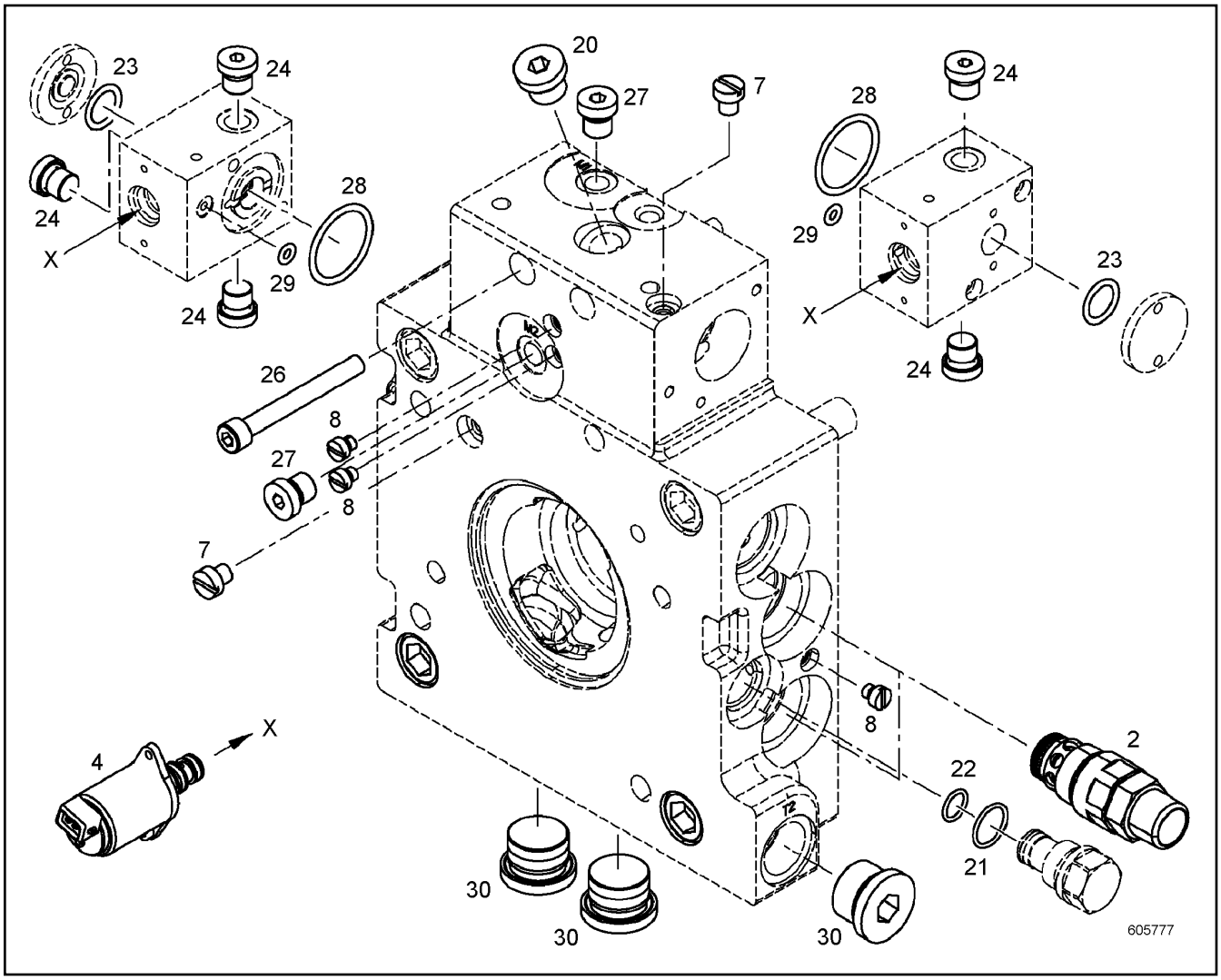

Pos.	Item	Quantity	Description	Bezeichnung	Serie	K
2	10332095	2	SEAL KIT PRESSURE VALVE	DS DRUCKVENTIL		
4	10123210	2	SEAL KIT PRESSUR.CONTROL VALVE	DS DRUCKREDUZIERVENTIL		
7	9881609	2	SCREW PLUG M8X1	VERSCHLUSSSCHRAUBE		
8	9268441	5	SCREW PLUG M6	VERSCHLUSSSCHRAUBE		
20	10137312	1	SCREW PLUG	VERSCHLUSSSCHRAUBE		
21	7381127	1	O-RING	O-RING		
22	7381128	1	O-RING	O-RING		
23	7380610	2	O-RING	O-RING		
24	10137113	4	SCREW PLUG	VERSCHLUSSSCHRAUBE		
26	11170484	2	SOCKET HEAD SCREW ISO 4762 M8X70 10.9	ZYLINDERSCHRAUBE		
27	10137115	2	SCREW PLUG	VERSCHLUSSSCHRAUBE		
28	10016947	2	O-RING	O-RING		
29	7022118	2	O-RING	O-RING		
30	10137108	3	SCREW PLUG	VERSCHLUSSSCHRAUBE		

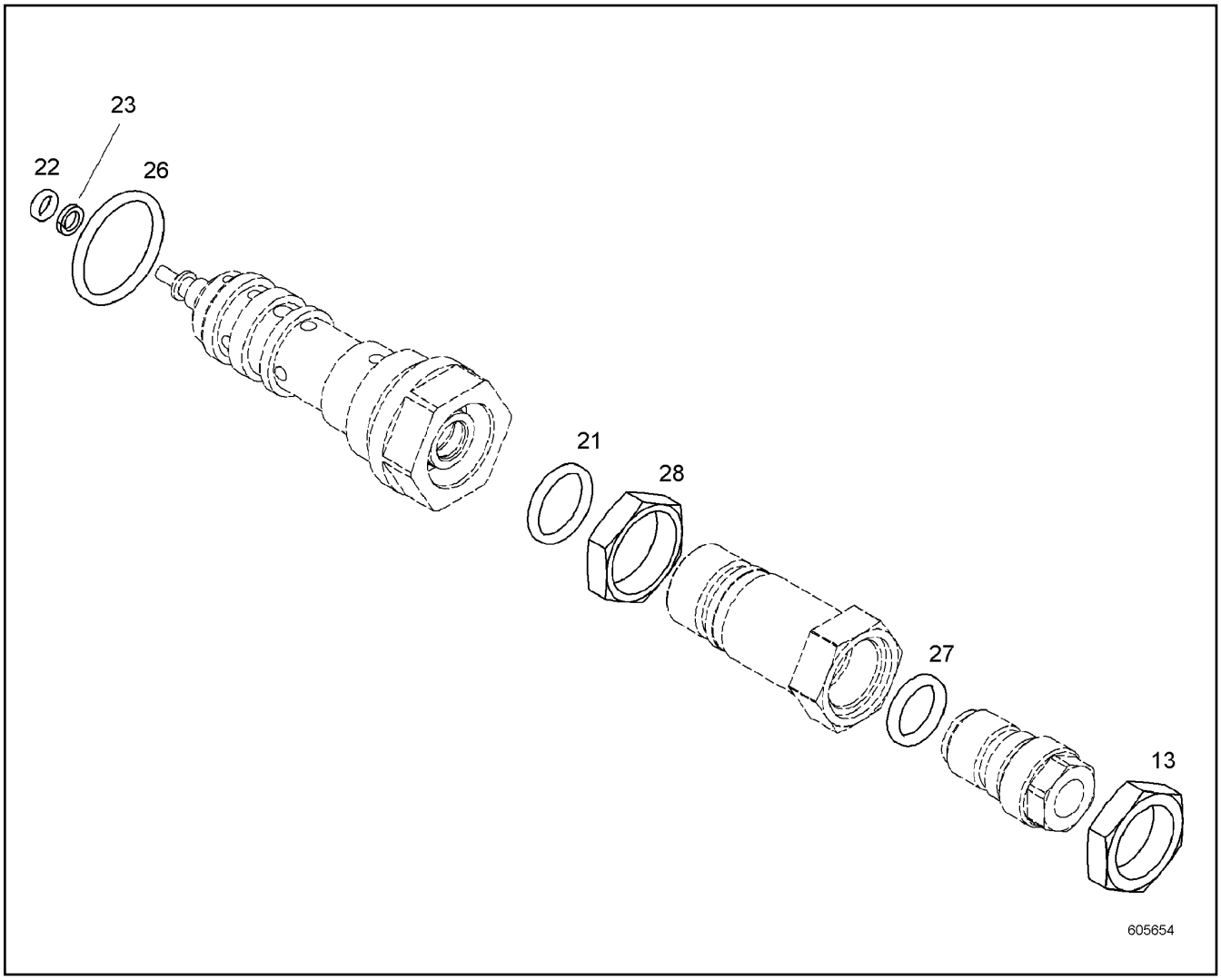

Pos.	Item	Quantity	Description	Bezeichnung	Serie	K
13	9072969	1	NUT M22X1.5 11SMNPB30+C;EN 10277-3	MUTTER		
21	7380987	1	O-RING	O-RING		
22	7381446	1	O-RING	O-RING		
23	7382212	1	BACK-UP RING CUT	STUETZRING GESCHL.		
26	7380608	1	O-RING	O-RING		
27	7380576	1	O-RING	O-RING		
28	9077401	1	NUT M24X1 9SMNPB28K	MUTTER		

OHNE BILD
WITHOUT ILLUSTRATION
SANS PLANCHE
SIN FIG.
SEM ILUSTRAÇÃO
БЕЗ ИЗОБРАЖЕНИЯ

600000

Pos.	Item	Quantity	Description	Bezeichnung	Serie	K
11	10129873	1	COUPLING FERRULE	KUPPLUNGSHUELSE		
20	4043163	2	SOCKET HEAD SCREW ISO 4762 M12X30 10.9	ZYLINDERSCHRAUBE		
22	7380605	1	O-RING	O-RING		

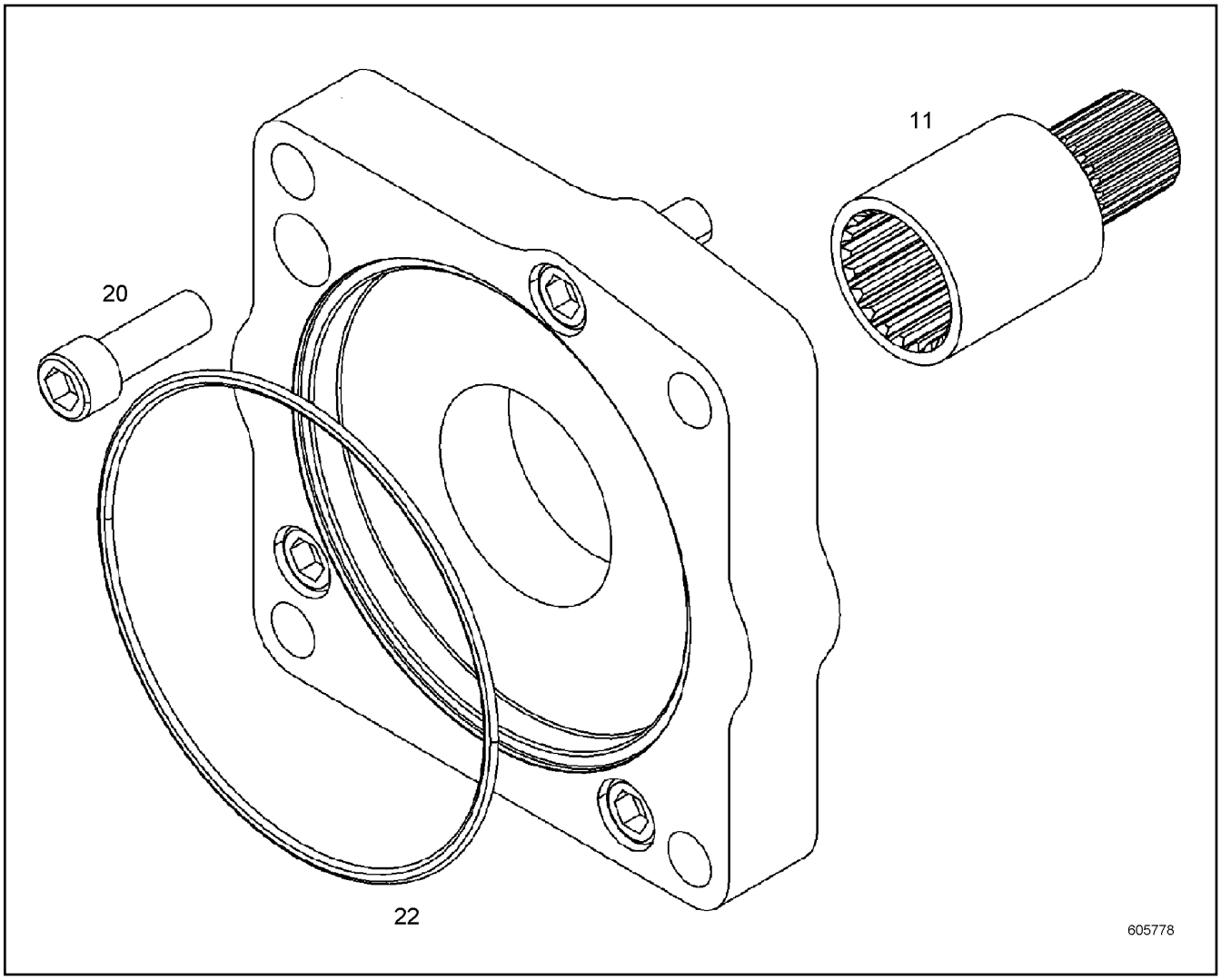

Pos.	Item	Quantity	Description	Bezeichnung	Serie	K
11	10130007	1	COUPLING FERRULE	KUPPLUNGSHUELSE		
20	4600513	4	SOCKET HEAD SCREW ISO 4762 M14X40 10.9	ZYLINDERSCHRAUBE		
22	7380601	1	O-RING	O-RING		

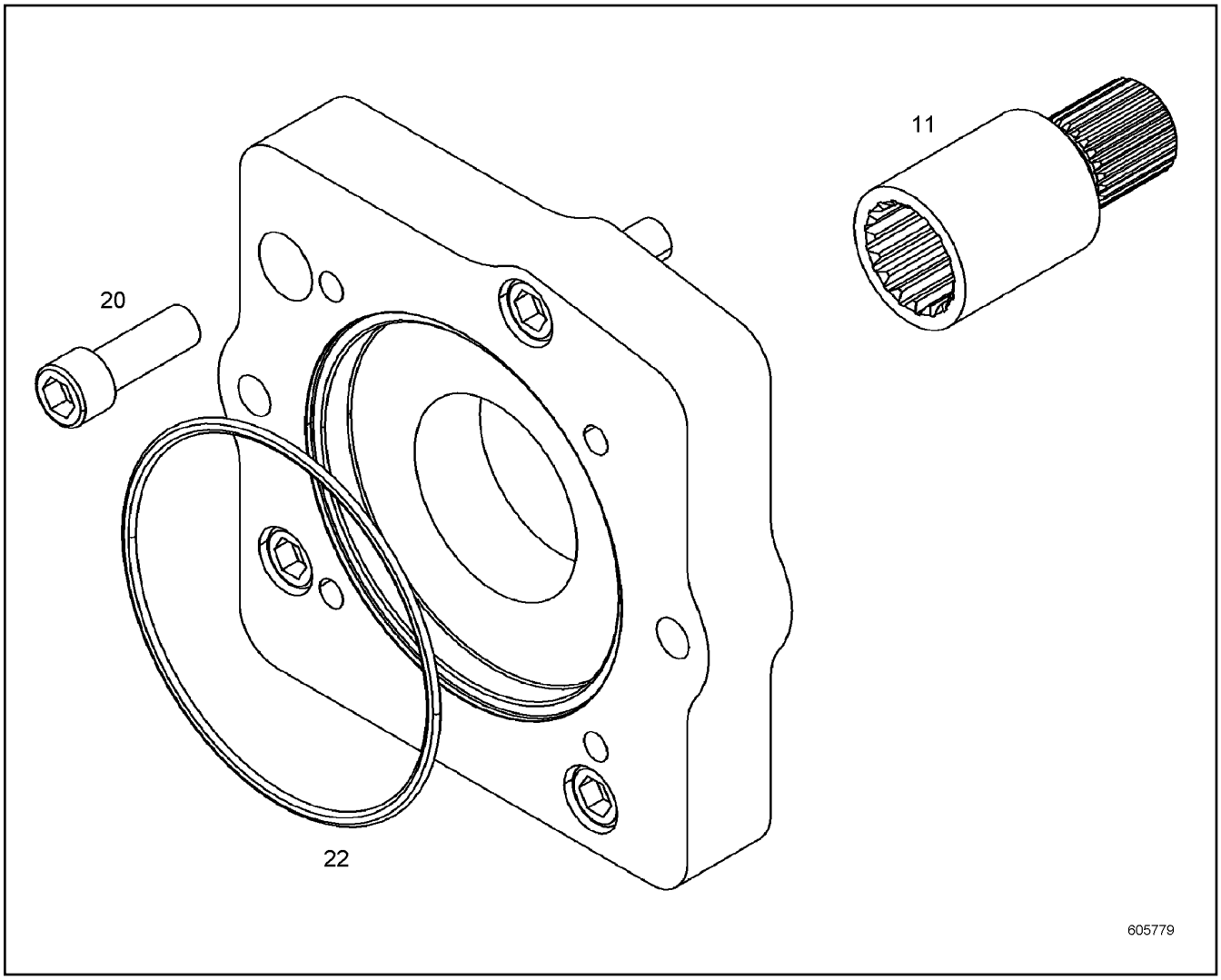

Pos.	Item	Quantity	Description	Bezeichnung	Serie	K
11	10132360	1	COUPLING FERRULE	KUPPLUNGSHUELSE		
20	4600513	4	SOCKET HEAD SCREW ISO 4762 M14X40 10.9	ZYLINDERSCHRAUBE		
22	7380691	1	O-RING	O-RING		

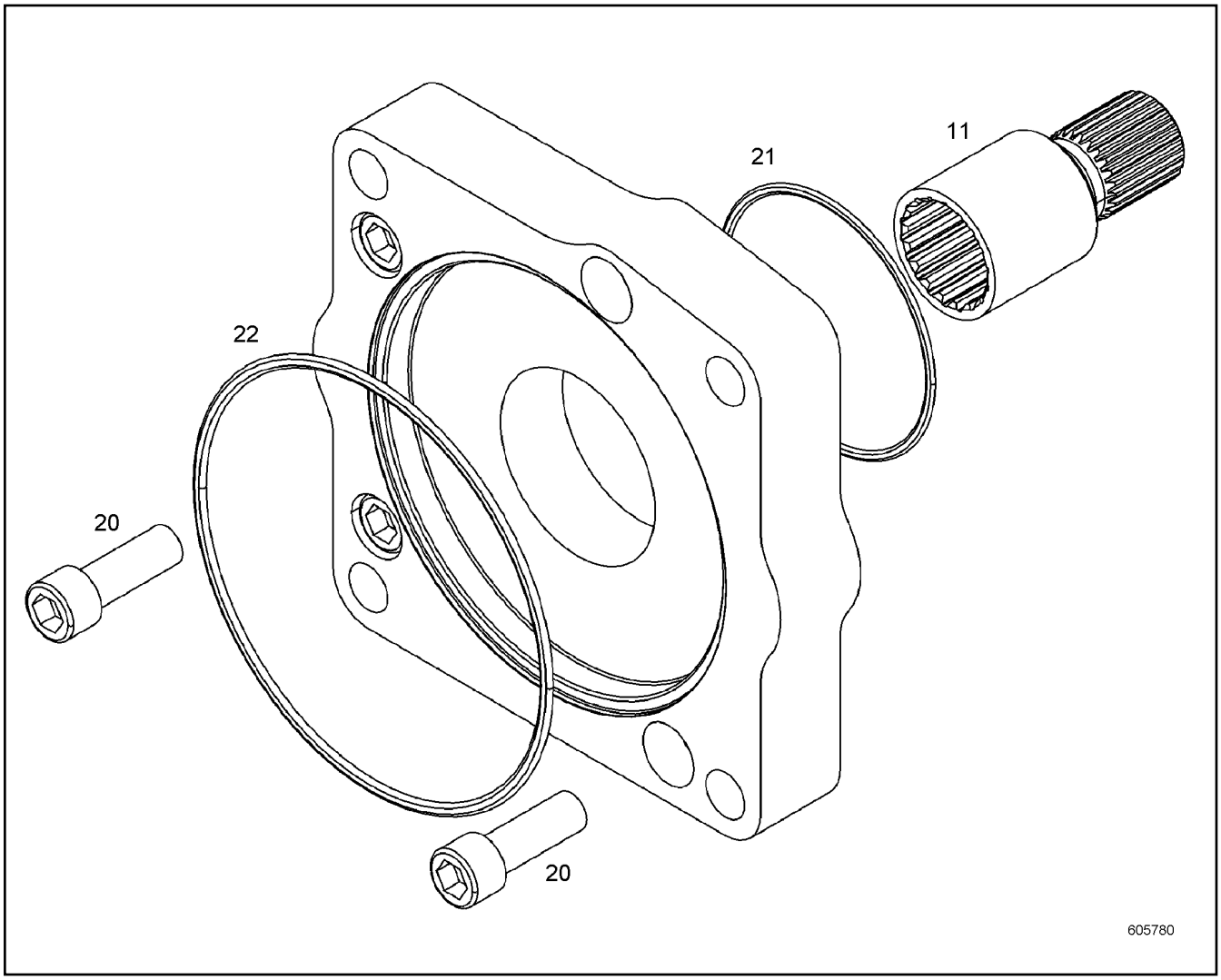

Pos.	Item	Quantity	Description	Bezeichnung	Serie	K
11	10117768	1	COUPLING FERRULE	KUPPLUNGSHUELSE		
20	4600513	4	SOCKET HEAD SCREW ISO 4762 M14X40 10.9	ZYLINDERSCHRAUBE		
21	7380297	1	O-RING	O-RING		
22	7380601	1	O-RING	O-RING		

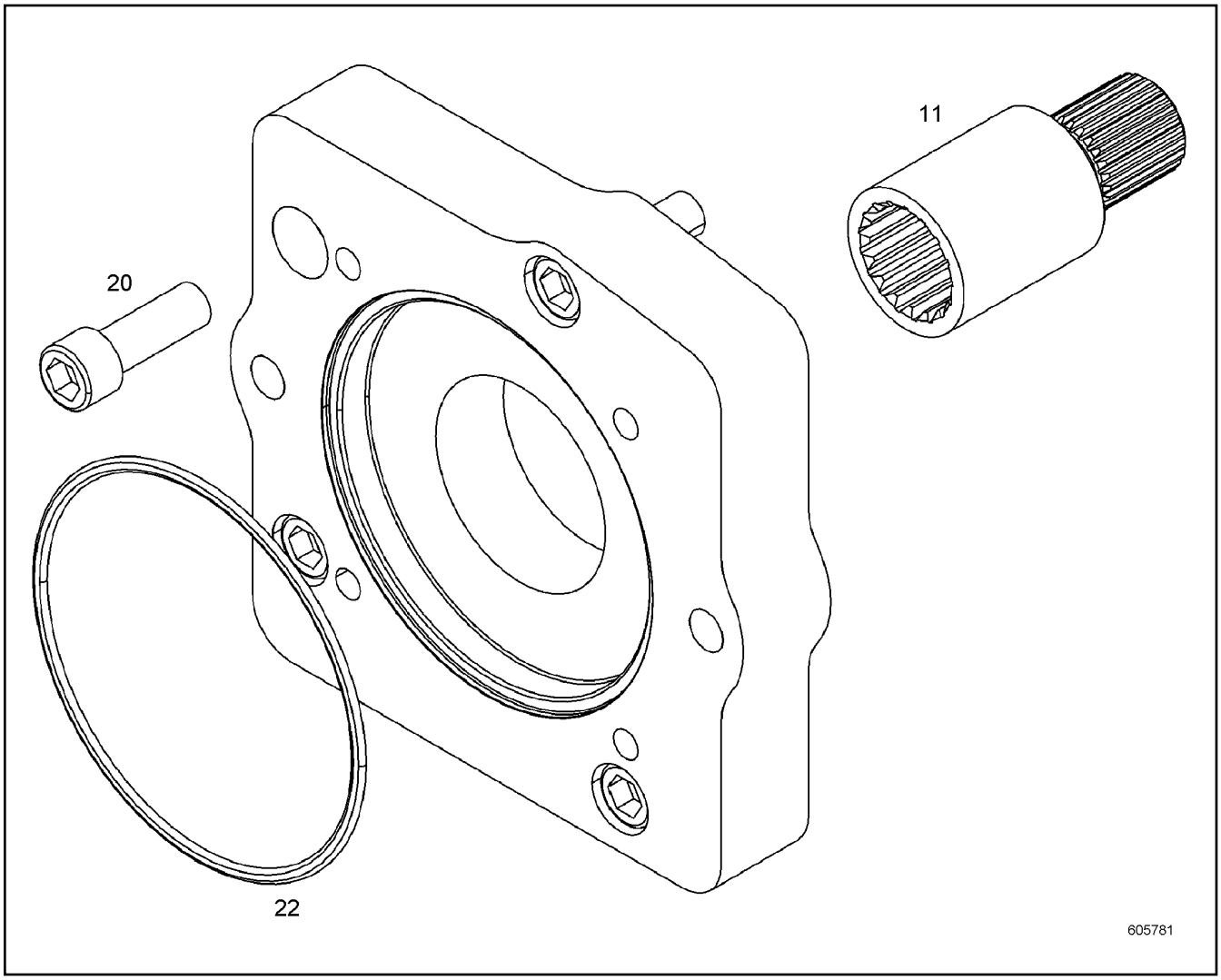

Pos.	Item	Quantity	Description	Bezeichnung	Serie	K
11	10138069	1	COUPLING FERRULE	KUPPLUNGSHUELSE		
20	4600513	4	SOCKET HEAD SCREW ISO 4762 M14X40 10.9	ZYLINDERSCHRAUBE		
22	7380691	1	O-RING	O-RING		

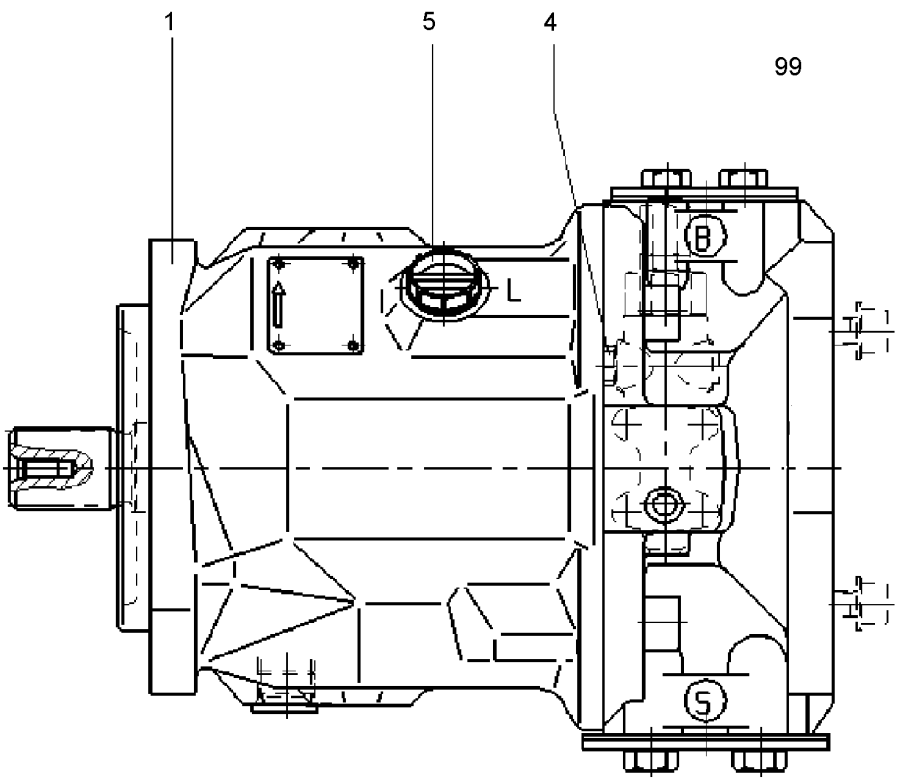

Pos.	Item	Quantity	Description	Bezeichnung	Serie	K
1	11221268	1	PUMP ELEMENT ⇨ ❑ 143	PUMPENELEMENT		
4	11220932	1	SEALING SCREW	DICHTSCHRAUBE		
5	11221267	1	SEALING SCREW	DICHTSCHRAUBE		
99	10351610	1	SEALING SET CPL ⇨ ❑ 151	DS KPL		

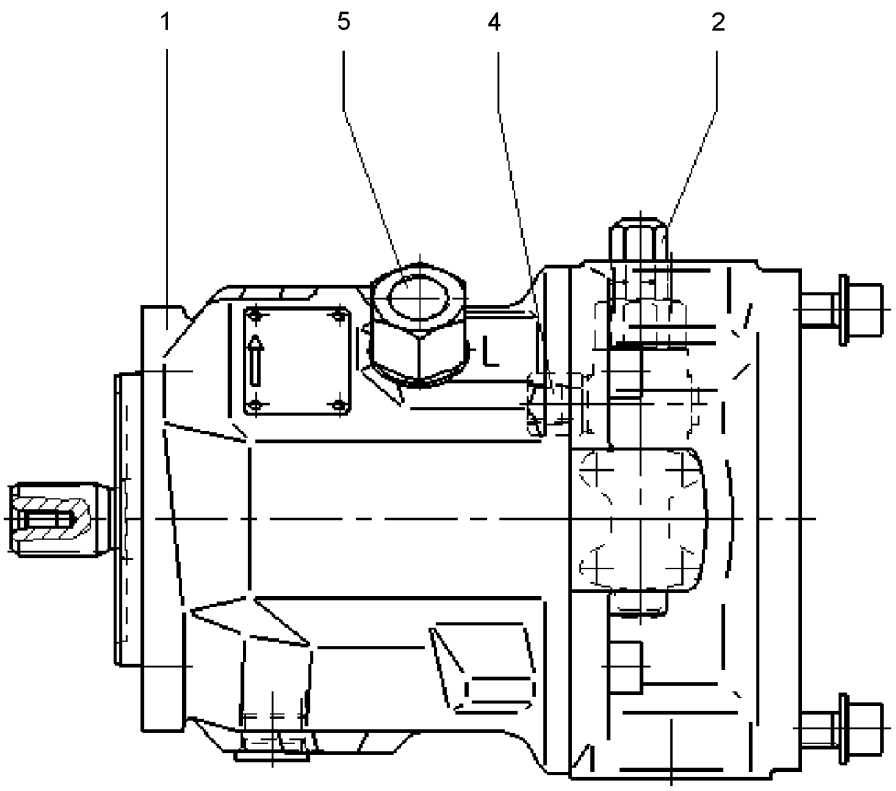

Pos.	Item	Quantity	Description	Bezeichnung	Serie	K
1	11221274	1	PUMP ELEMENT ⇨ ❑ 144	PUMPENELEMENT		
2	10351603	1	CONTROL VALVE ⇨ ❑ 148	STEUERVENTIL		
4	7019834	1	ADAPTER ⇨ ❑ 149	ADAPTER		
5	11221276	1	ADAPTER ⇨ ❑ 150	ADAPTER		

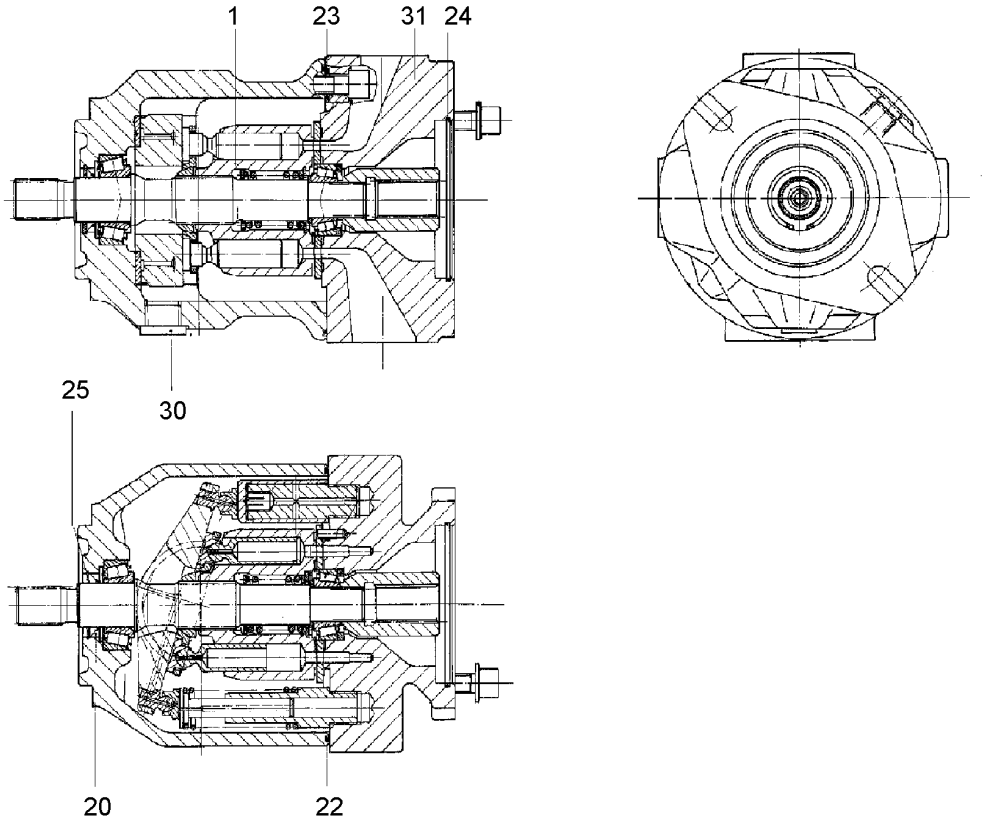

Pos.	Item	Quantity	Description	Bezeichnung	Serie	K
1	10324889	1	DRIVING GEAR ⇨ ❑ 145	TRIEBWERK		
20	710069514	1	SHAFT SEAL	WELLENDICHTRING		
22	10351605	1	O-RING	O-RING		
23	10351608	4	O-RING	O-RING		
24	10099094	1	O-RING	O-RING		
25	10220937	1	LOCKING RING AEHNL.DIN 984 40X1.75	SICHERUNGSRING		
30	11217837	1	SCREW PLUG	VERSCHLUSSSCHRAUBE		
31	10337055	1	DOUBLE PLUG	DOPPELABREISSSTOPFEN		

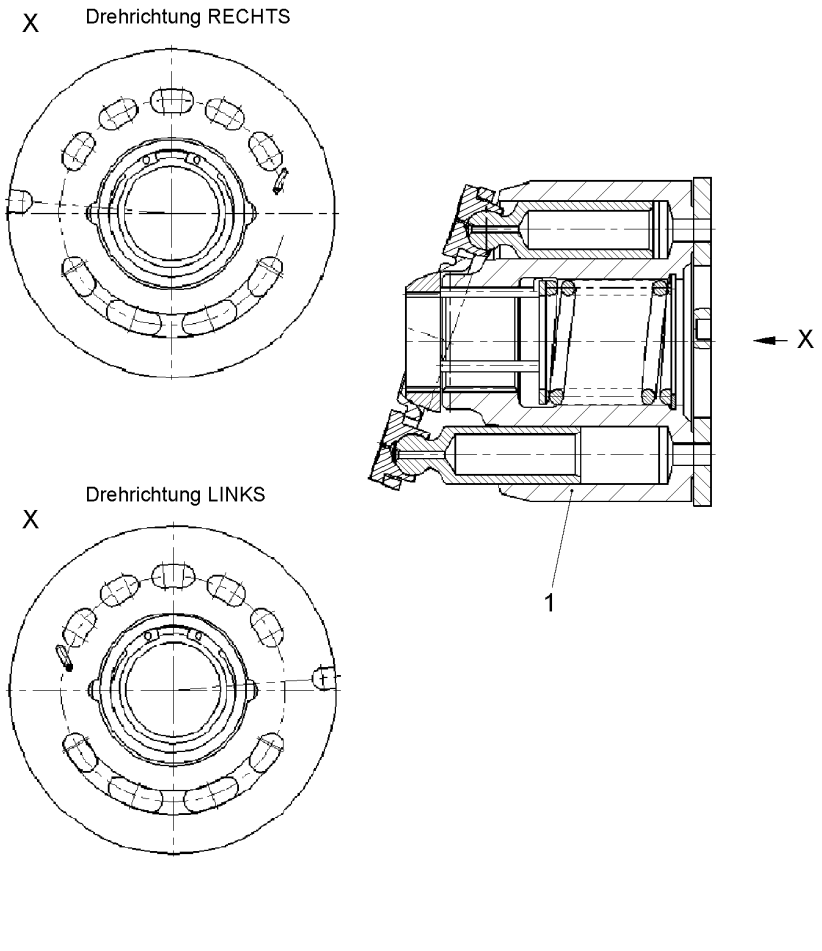

Pos.	Item	Quantity	Description	Bezeichnung	Serie	K
1	10324892	1	DRIVING GEAR ⇨ ❑ 146	TRIEBWERK		

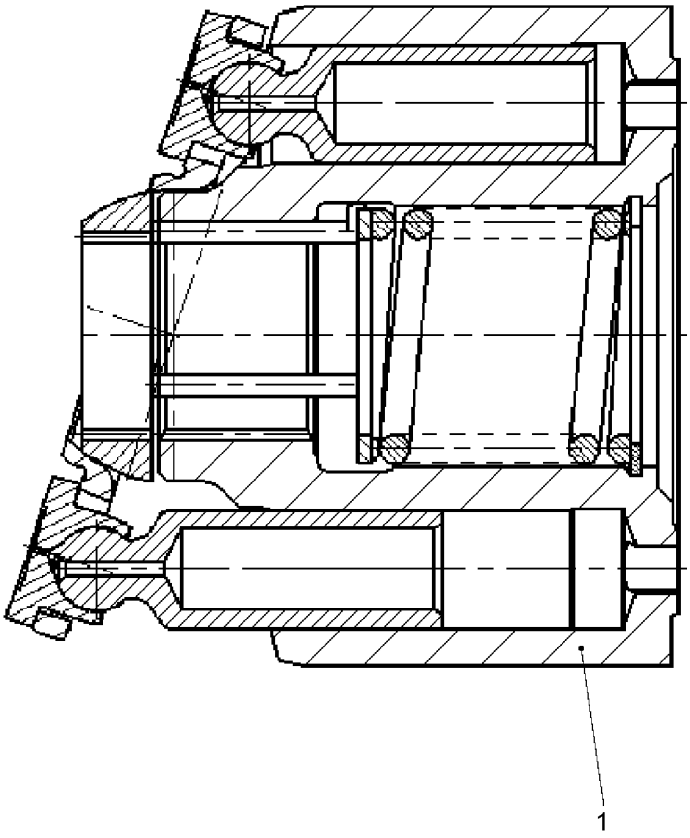

605228

Pos.	Item	Quantity	Description	Bezeichnung	Serie	K
1	11490323	1	CYLINDER ⇨ ❑ 147	ZYLINDER		

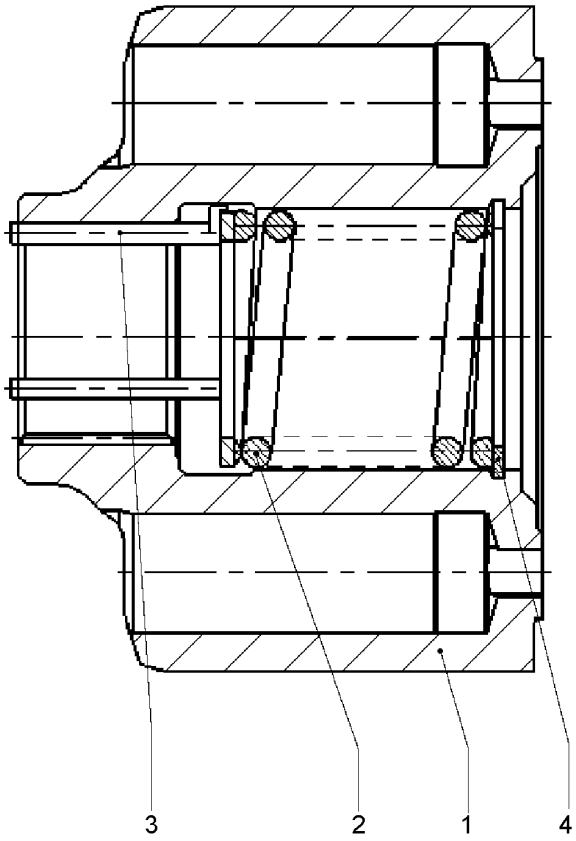

Pos.	Item	Quantity	Description	Bezeichnung	Serie	K
1	10324901	1	CYLINDER	ZYLINDER		
2	10324860	1	SPRING	FEDER		
3	10101458	3	PRESSURE PIN	DRUCKSTIFT		
4	10324881	1	V-RING	V-RING		

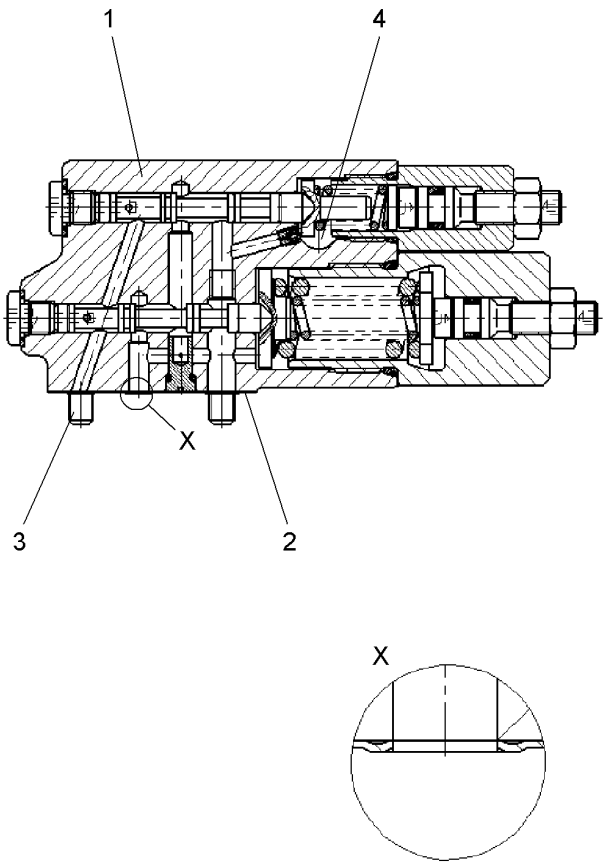

Pos.	Item	Quantity	Description	Bezeichnung	Serie	K
1	10409413	1	CONTROL VALVE	STEUERVENTIL		
2	10297876	1	SEAL	DICHTUNG		
3	11215951	4	SOCKET HEAD SCREW	ZYLINDERSCHRAUBE		
4	7020821	1	SCREW PLUG	VERSCHLUSSSCHRAUBE		

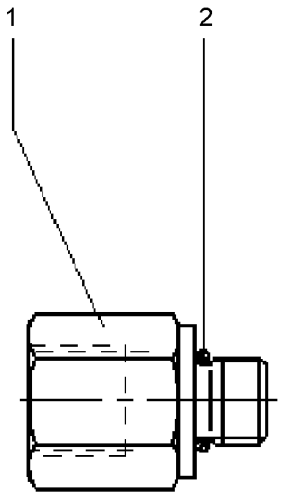

604751

Pos.	Item	Quantity	Description	Bezeichnung	Serie	K
1	570950308	1	ADAPTER	ADAPTER		
2	7019733	1	O-RING	O-RING		

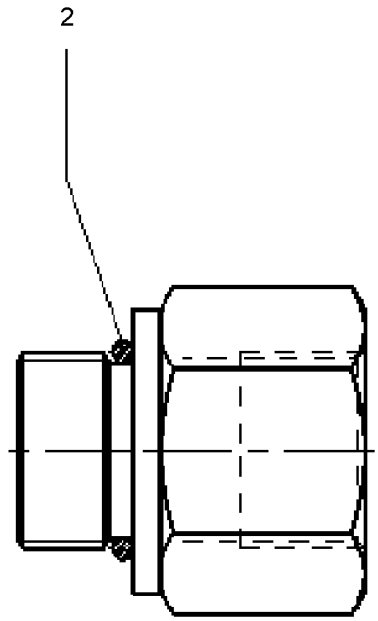

604782

Pos.	Item	Quantity	Description	Bezeichnung	Serie	K
2	11221283	1	O-RING	O-RING		

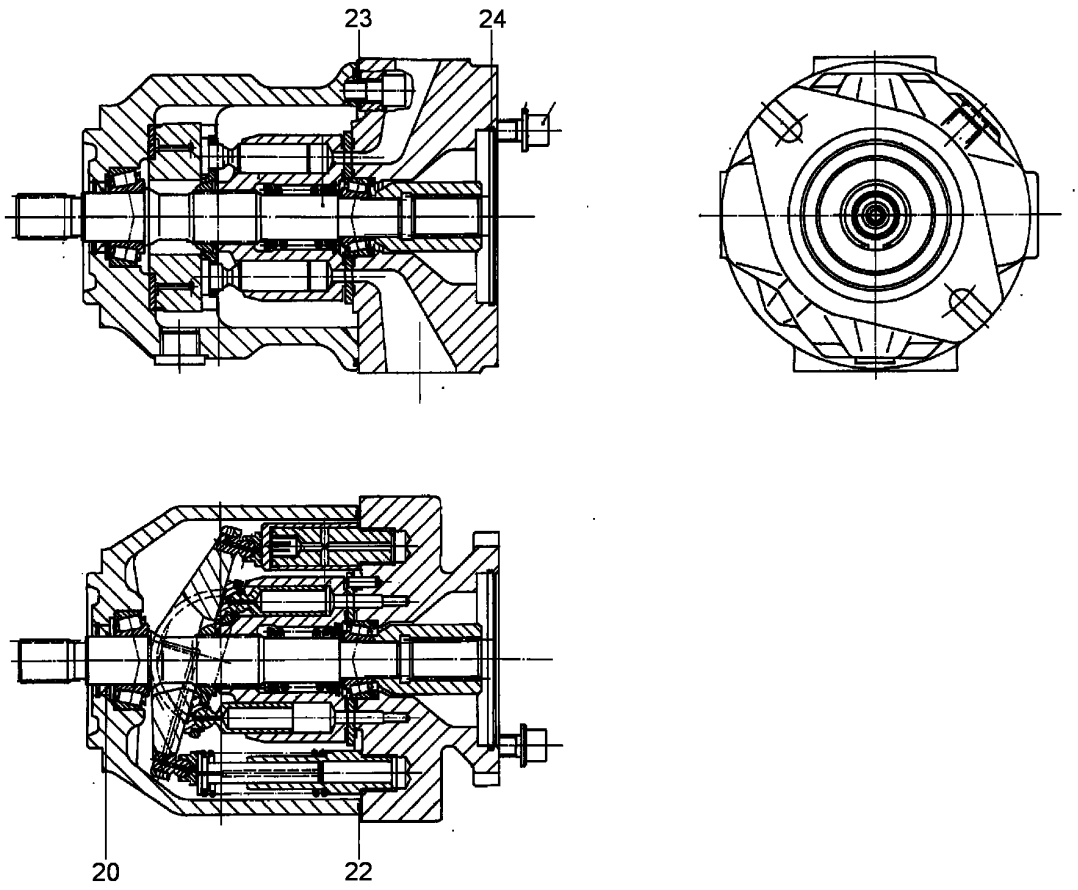

Pos.	Item	Quantity	Description	Bezeichnung	Serie	K
20	710069514	1	SHAFT SEAL	WELLENDICHTRING		
22	10351605	1	O-RING	O-RING		
23	10351608	4	O-RING	O-RING		
24	10099094	1	O-RING	O-RING		

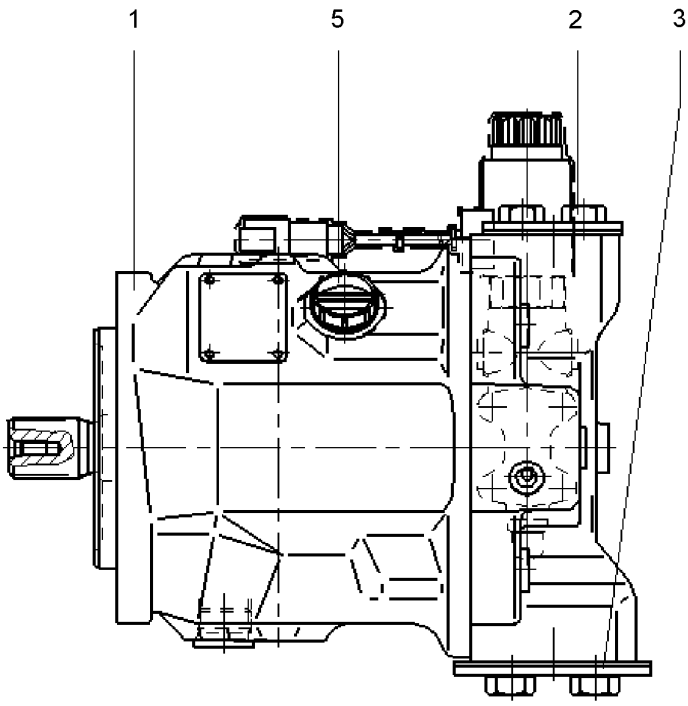

Pos.	Item	Quantity	Description	Bezeichnung	Serie	K
1	11215913	1	PUMP ELEMENT ⇨ ❑ 153	PUMPENELEMENT		
2	11215698	1	FLANGE COVER	FLANSCHABDECKUNG		
3	11215699	1	FLANGE COVER	FLANSCHABDECKUNG		
5	11100007	1	SEALING SCREW	DICHTSCHRAUBE		

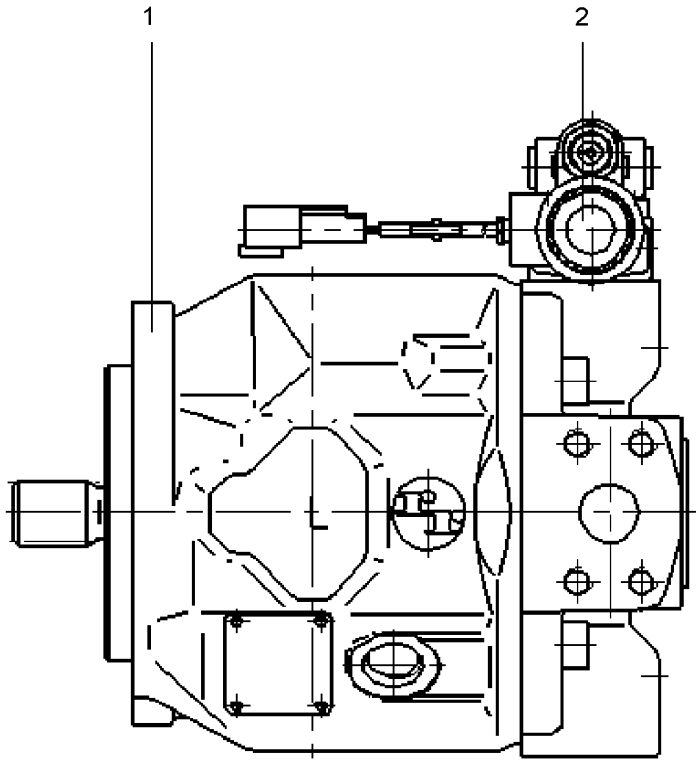

Pos.	Item	Quantity	Description	Bezeichnung	Serie	K
1	11215936	1	PUMP ELEMENT ⇨ ❑ 154	PUMPENELEMENT		
2	10114975	1	CONTROL VALVE ⇨ ❑ 157	STEUERVENTIL		

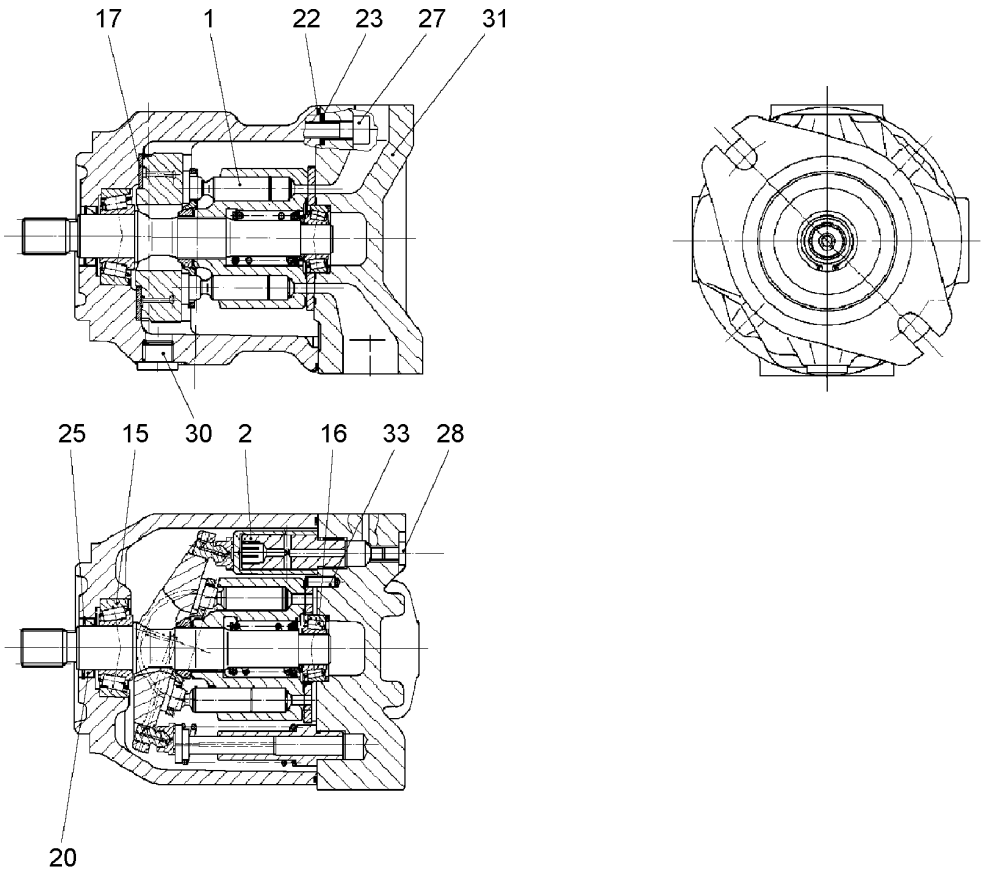

Pos.	Item	Quantity	Description	Bezeichnung	Serie	K
1	10287664	1	DRIVING GEAR ⇨ ❑ 155	TRIEBWERK		
2	10287665	1	ADJUSTING PIECE ⇨ ❑ 156	VERSTELLTEIL		
15	10355730	1	TAPERED ROLLER BEARING	KEGELROLLENLAGER		
16	10355731	1	TAPERED ROLLER BEARING	KEGELROLLENLAGER		
17	7025904	2	BEARING SHELL	LAGERSCHALE		
20	790246414	1	SHAFT SEAL	WELLENDICHTRING		
22	10802833	1	O-RING	O-RING		
23	11215707	4	O-RING	O-RING		
25	10008092	1	LOCKING RING 35X1.5	SICHERUNGSRING		
27	10355735	4	SOCKET HEAD SCREW M10X30	ZYLINDERSCHRAUBE		
28	10115237	2	SCREW PLUG M10X1	VERSCHLUSSSCHRAUBE		
30	7370843	1	SCREW PLUG 3/4"-16UNF	VERSCHLUSSSCHRAUBE		
31	10337055	1	DOUBLE PLUG	DOPPELABREISSSTOPFEN		
33	570948608	1	PARALLEL PIN ISO 2338 6X18 ST	ZYLINDERSTIFT		

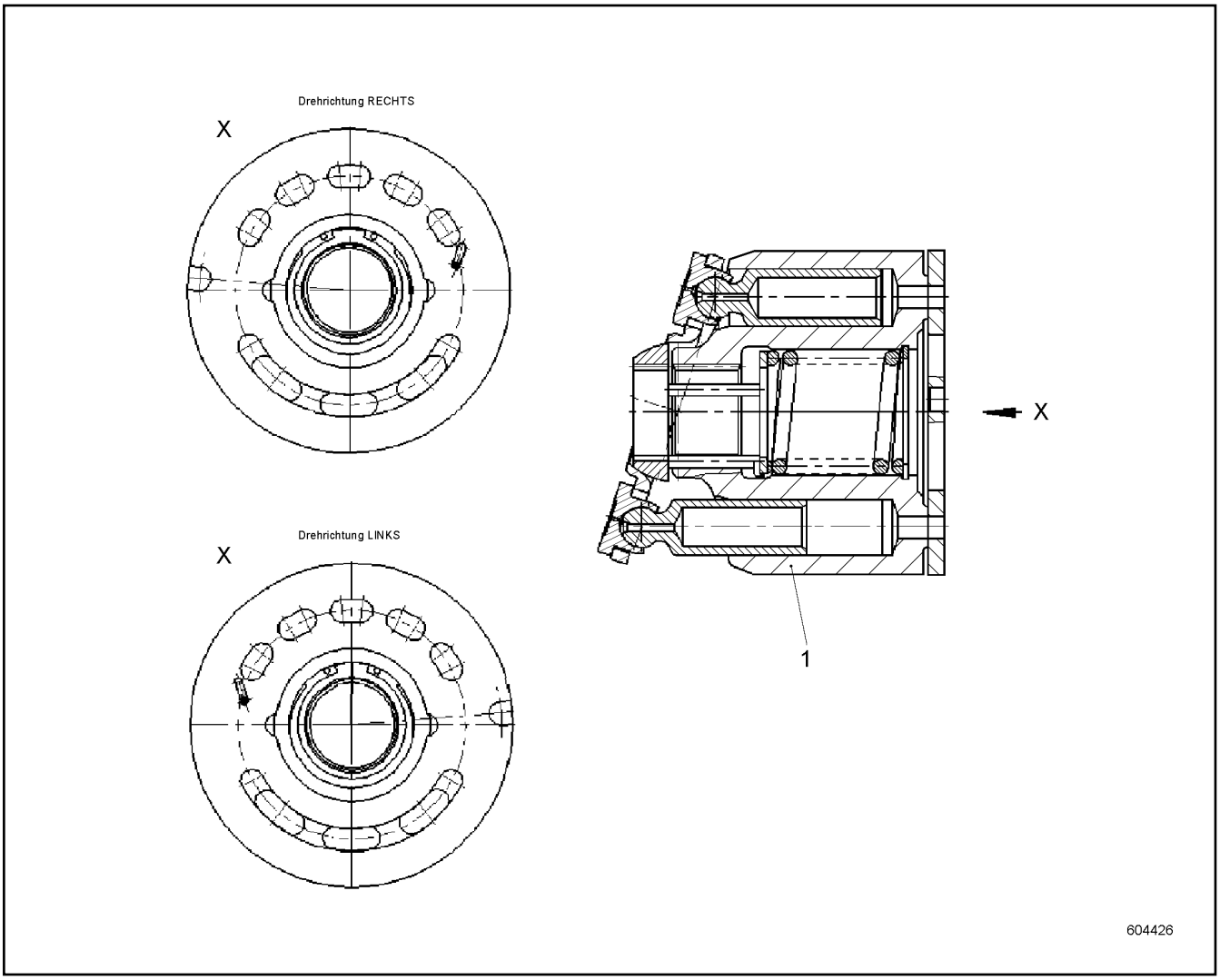

Pos.	Item	Quantity	Description	Bezeichnung	Serie	K
1	10287725	1	DRIVING GEAR	TRIEBWERK		

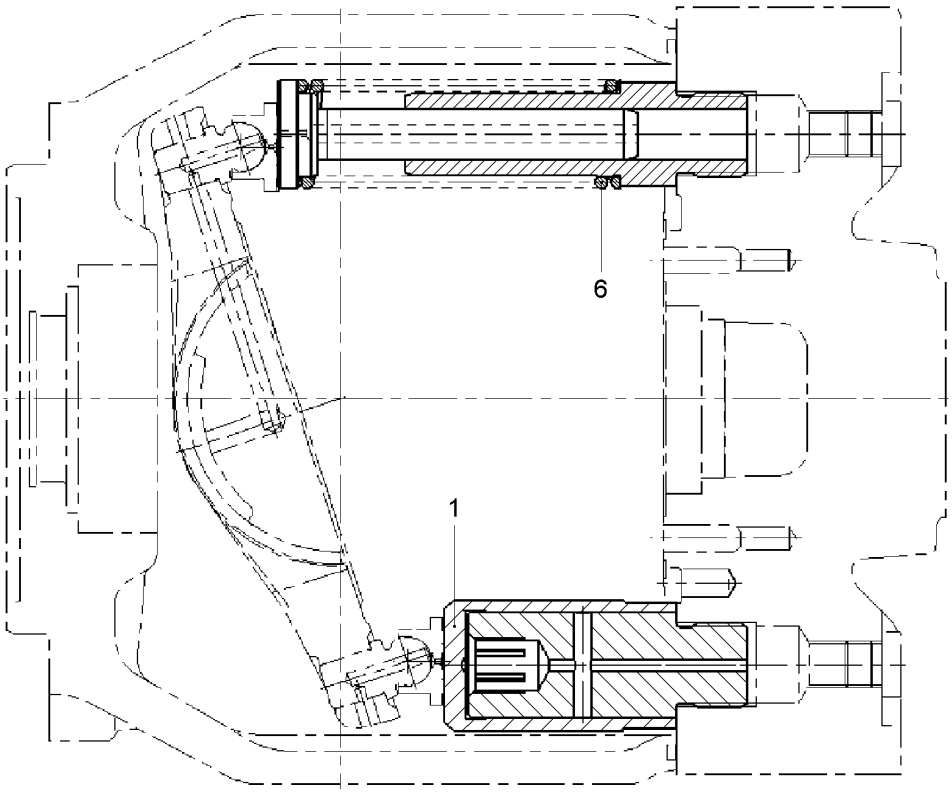

Pos.	Item	Quantity	Description	Bezeichnung	Serie	K
1	10287733	1	DISPLACEMENT PISTON	VERSTELLKOLBEN		
6	10287741	1	SPRING	FEDER		

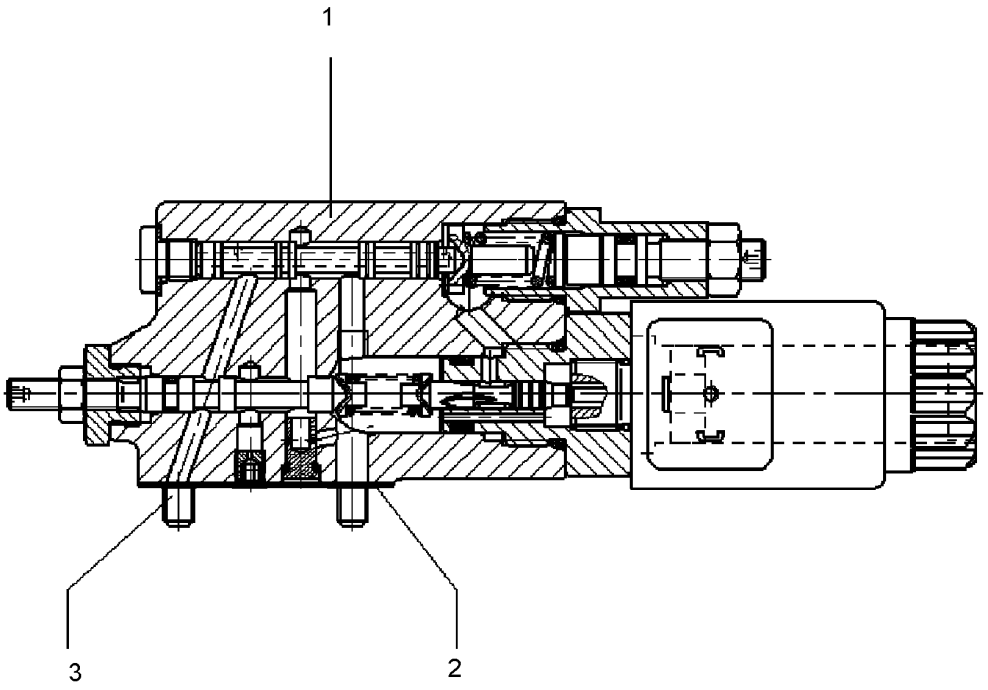

604447

Pos.	Item	Quantity	Description	Bezeichnung	Serie	K
1	11215942	1	CONTROL VALVE	STEUERVENTIL		
2	10297876	1	SEAL	DICHTUNG		
3	11215951	4	SOCKET HEAD SCREW	ZYLINDERSCHRAUBE		

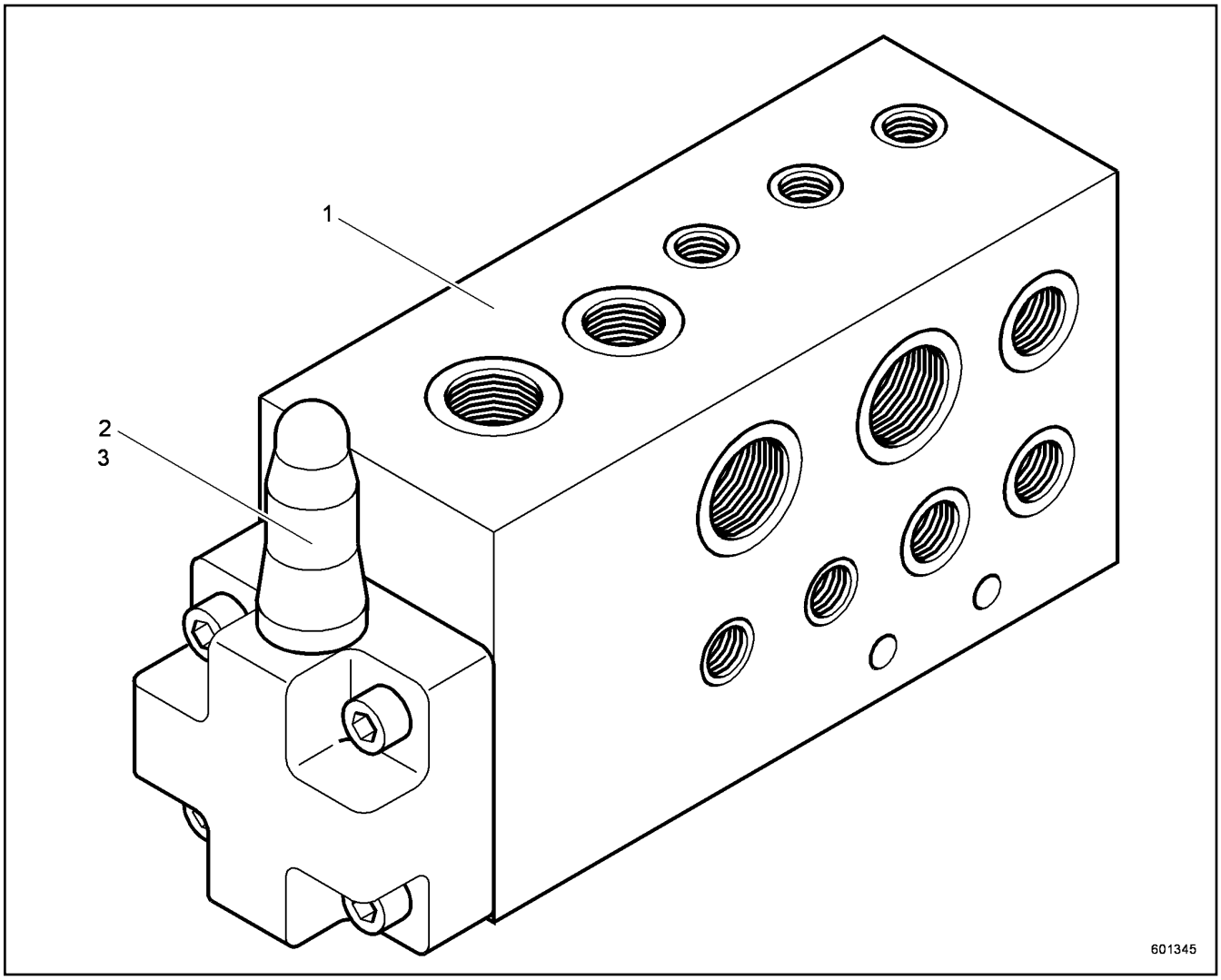

Pos.	Item	Quantity	Description	Bezeichnung	Serie	K
1	511640614	1	CONTROL BLOCK	STEUERBLOCK		
2	511640714	1	BUILT-IN VALVE	EINBAUVENTIL		
3	511640814	1	CONTROL LID	STEUERDECKEL		

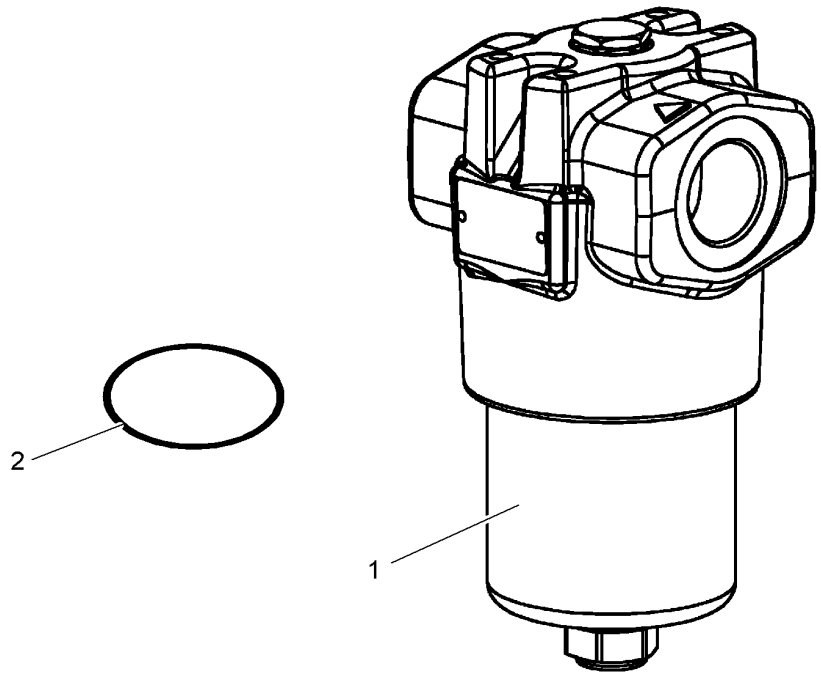

Pos.	Item	Quantity	Description	Bezeichnung	Serie	K
1	10037623	1	FILTER INSERT	FILTEREINSATZ		
2	10350604	1	O-RING	O-RING		
3	10224159	1	SEALING SET CPL	DS KPL		

OHNE BILD
WITHOUT ILLUSTRATION
SANS PLANCHE
SIN FIG.
SEM ILUSTRAÇÃO
БЕЗ ИЗОБРАЖЕНИЯ

600000

Pos.	Item	Quantity	Description	Bezeichnung	Serie	K
11	11247122	1	CABLE LOOM W 1	KABELSTRANG W 1		
12	10123877	2	RUBBER RING	GUMMIRING		
13	6205239	1	SOCKET	STECKDOSE		
21	10226635	1	RELAY	RELAIS		

ACHTUNG !
ATTENTION !
ATTENTION !
ATENCIÓN !
ATENÇÃO !
ВНИМАНИЕ

Für Schlauchbestellungen kann über die Schlauchnummer, in der entsprechenden Schlauchliste, die Identnummer festgestellt werden.

For ordering flexible hoses you can find the identification number through the hose-number in the corresponding hose-list.

Pour des ordres de tuyau flexible le nombre d'identification on voit dans la liste de tuyau flexible correspondente.

Para el pedido de manguera, indicar el número de identificación de la manguera de la lista respectiva.

Para se encomendar uma mangueira, consulte o número de identificaçao na respectiva lista de mangueiras.

Для оформления заказов на шланги/рукавы идент. № может быть определен при помощи номера шланга/рукава, указанного в соотетствующем перечне шлангов/рукавов.

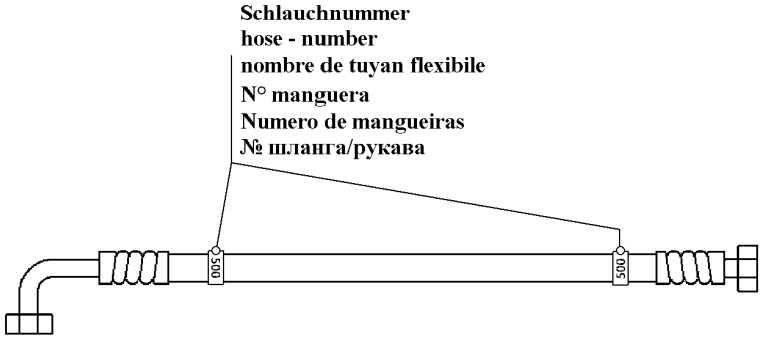

500000

Pos.	Item	Quantity	Description	Bezeichnung	Serie	K
400	992835314	1	HOSE CPL	SCHLAUCH KPL		
401	991139814	1	HOSE CPL	SCHLAUCH KPL		
402	995421014	1	HOSE CPL	SCHLAUCH KPL		
403	928266514	1	HOSE CPL	SCHLAUCH KPL		
404	914757914	1	HOSE CPL	SCHLAUCH KPL		
406	991964414	1	HOSE CPL	SCHLAUCH KPL		
407	928857314	1	HOSE CPL	SCHLAUCH KPL		
408	990053014	1	HOSE CPL	SCHLAUCH KPL		
409	993643514	1	HOSE CPL	SCHLAUCH KPL		
411	928272714	1	HOSE CPL	SCHLAUCH KPL		
415	929381114	1	HOSE CPL	SCHLAUCH KPL		
416	995180714	1	HOSE CPL	SCHLAUCH KPL		
418	928868414	1	HOSE CPL	SCHLAUCH KPL		
419	991547014	1	HOSE CPL	SCHLAUCH KPL		
420	928952714	1	HOSE CPL	SCHLAUCH KPL		
421	919143414	1	HOSE CPL	SCHLAUCH KPL		
422	919167714	1	HOSE CPL	SCHLAUCH KPL		
424	995961914	1	HOSE CPL	SCHLAUCH KPL		
425	995263914	1	HOSE CPL	SCHLAUCH KPL		
426	995962014	1	HOSE CPL	SCHLAUCH KPL		
427	928880614	1	HOSE CPL	SCHLAUCH KPL		
428	928009314	1	HOSE CPL	SCHLAUCH KPL		
429	995550714	1	HOSE CPL	SCHLAUCH KPL		
430	918269214	1	HOSE CPL	SCHLAUCH KPL		
431	928589814	1	HOSE CPL	SCHLAUCH KPL		
432	918874514	1	HOSE CPL	SCHLAUCH KPL		

ACHTUNG !
ATTENTION !
ATTENTION !
ATENCIÓN !
ATENÇÃO !
ВНИМАНИЕ

Für Schlauchbestellungen kann über die Schlauchnummer, in der entsprechenden Schlauchliste, die Identnummer festgestellt werden.

For ordering flexible hoses you can find the identification number through the hose-number in the corresponding hose-list.

Pour des ordres de tuyau flexible le nombre d'identification on voit dans la liste de tuyau flexible correspondente.

Para el pedido de manguera, indicar el número de identificación de la manguera de la lista respectiva.

Para se encomendar uma mangueira, consulte o número de identificaçao na respectiva lista de mangueiras.

Для оформления заказов на шланги/рукавы идент. № может быть определен при помощи номера шланга/рукава, указанного в соотетствующем перечне шлангов/рукавов.

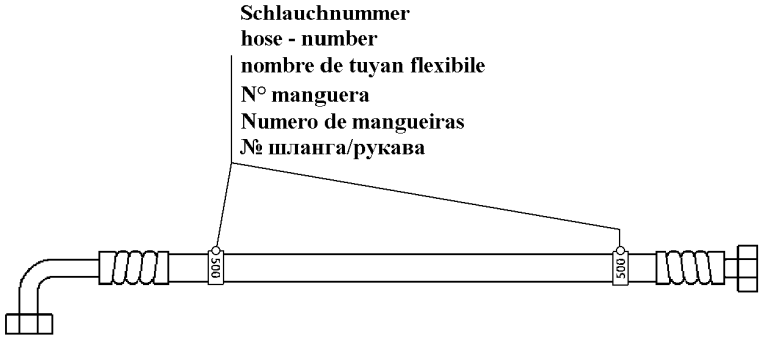

500000

Pos.	Item	Quantity	Description	Bezeichnung	Serie	K
435	928611014	1	HOSE CPL	SCHLAUCH KPL		

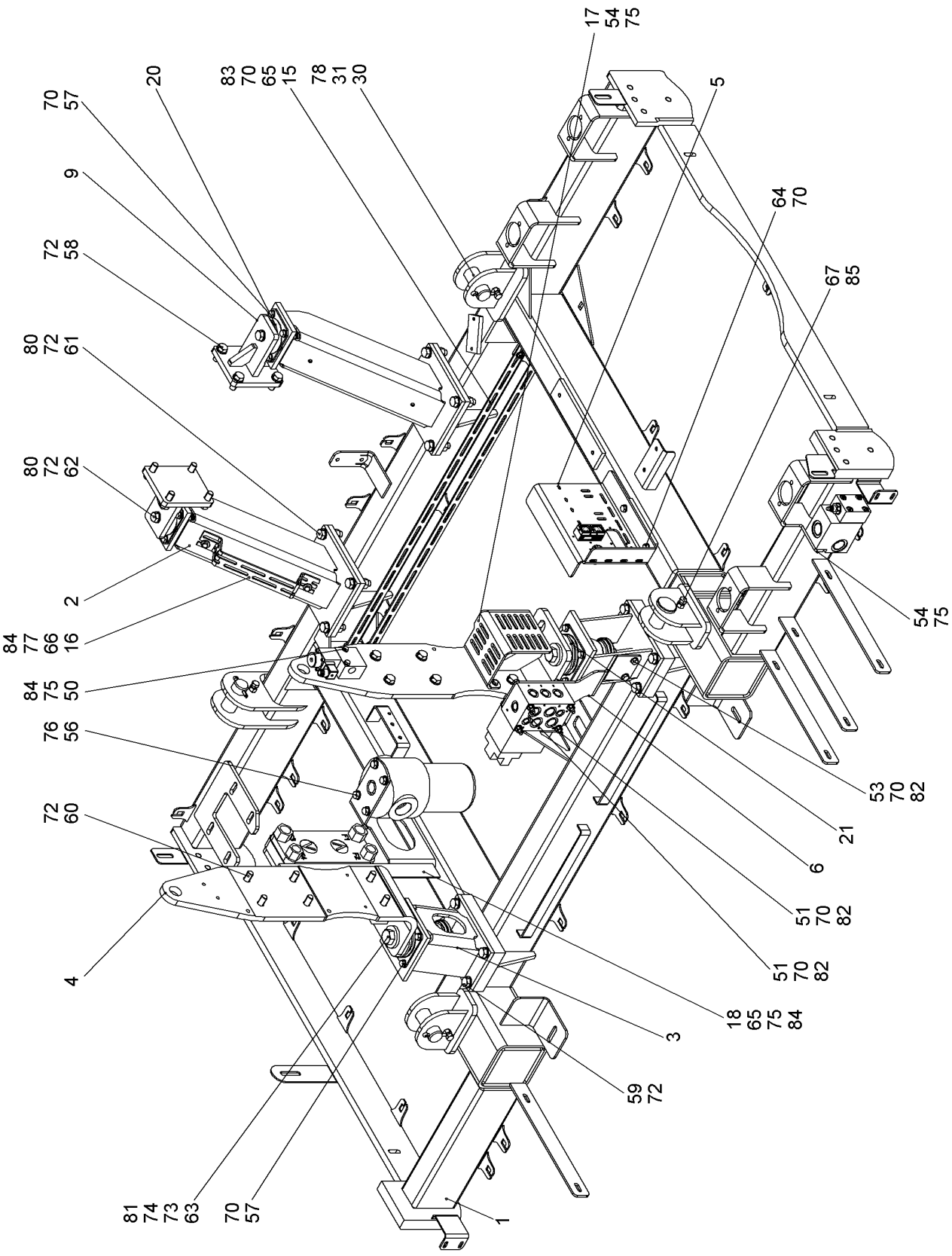

8.7.2015 519780 LIEBHERR	**138281_ETK_001** **MOTOR BEARING CPL** **MOTORLAGER KPL**	❑ 163 (1/2) **11 24 113 8**

Pos.	Item	Quantity	Description	Bezeichnung	Serie	K
1	11247688	1	FRAME CPL	RAHMEN KPL		
2	11249800	2	CONSOLE	KONSOLE		
3	10579755	2	CONSOLE	KONSOLE		
4	11250222	2	CONSOLE	KONSOLE		
5	10579779	1	CONSOLE	KONSOLE		
6	11215384	1	CONSOLE	KONSOLE		
9	11249889	2	CONSOLE	KONSOLE		
15	11234799	2	SLOTTED TAPE STEEL	SCHLITZBANDSTAHL		
16	11263413	1	BRACKET	BUEGEL		
17	11263501	1	CONSOLE	KONSOLE		
18	11263757	1	ANGLE	WINKEL		
21	746923314	2	CONICAL MOUNT	KONUSLAGER		
30	11250329	4	PIN	BOLZEN		
31	433009014	4	SPLIT PIN ISO 1234 8X56 A4	SPLINT		
50	10538809	2	HEX SCREW ISO 4017 M8X80 A4-70	SECHSKANTSCHRAUBE		
51	10538824	6	HEX SCREW ISO 4017 M10X110 A4-70	SECHSKANTSCHRAUBE		
53	406511614	2	HEX SCREW ISO 4017 M10X30 A4-70	SECHSKANTSCHRAUBE		
54	406518814	4	HEX SCREW ISO 4017 M8X20 A4-70	SECHSKANTSCHRAUBE		
56	406517914	4	HEX SCREW ISO 4017 M12X25 A4-70	SECHSKANTSCHRAUBE		
57	406527414	16	HEX SCREW ISO 4017 M10X18 A4-70	SECHSKANTSCHRAUBE		
58	10539318	8	HEX SCREW ISO 4017 M16X40 10.9	SECHSKANTSCHRAUBE		
59	10539317	8	HEX SCREW ISO 4017 M16X35 10.9	SECHSKANTSCHRAUBE		
60	10543902	12	HEX SCREW ISO 4017 M16X45 10.9	SECHSKANTSCHRAUBE		
61	10543905	8	HEX SCREW ISO 4017 M16X60 10.9	SECHSKANTSCHRAUBE		
62	10543914	2	HEX SCREW ISO 4017 M16X130 10.9	SECHSKANTSCHRAUBE		
63	10544017	2	HEX SCREW ISO 4014 M24X200 10.9	SECHSKANTSCHRAUBE		
64	406527314	2	HEX SCREW ISO 4017 M10X16 A4-70	SECHSKANTSCHRAUBE		
65	406501414	8	HEX SCREW ISO 4017 M8X25 A4-70	SECHSKANTSCHRAUBE		
66	406501314	2	HEX SCREW ISO 4017 M8X30 A4-70	SECHSKANTSCHRAUBE		
67	406511414	8	HEX SCREW ISO 4017 M12X40 A4-70	SECHSKANTSCHRAUBE		
70	420001114	42	WASHER ISO 7089 10 A4	SCHEIBE		
72	10544172	48	WASHER ISO 7089 16	SCHEIBE		
73	883203014	2	WASHER DIN 6340 25	SCHEIBE		
74	460014603	2	WASHER DIN 6916 25 C45	SCHEIBE		
75	420001014	16	WASHER ISO 7089 8 A4	SCHEIBE		
76	420001514	4	WASHER ISO 7089 12 A4	SCHEIBE		
77	421300514	4	WASHER DIN 6340 8.4 C35	SCHEIBE		
78	421103014	4	WASHER DIN EN 28738 40 ST	SCHEIBE		
80	10544154	10	HEX NUT ISO 4032 M16 10	SECHSKANTMUTTER		
81	10544158	2	HEX NUT ISO 4032 M24 10	SECHSKANTMUTTER		
82	411514614	8	HEX NUT ISO 4032 M10 A4-70	SECHSKANTMUTTER		
83	411515014	4	HEX NUT ISO 4032 M8 A4-70	SECHSKANTMUTTER		
84	10540493	8	HEX NUT ISO 10511 M8 A4	SECHSKANTMUTTER		
85	411516914	8	HEX NUT ISO 4032 M12 A4-70	SECHSKANTMUTTER		

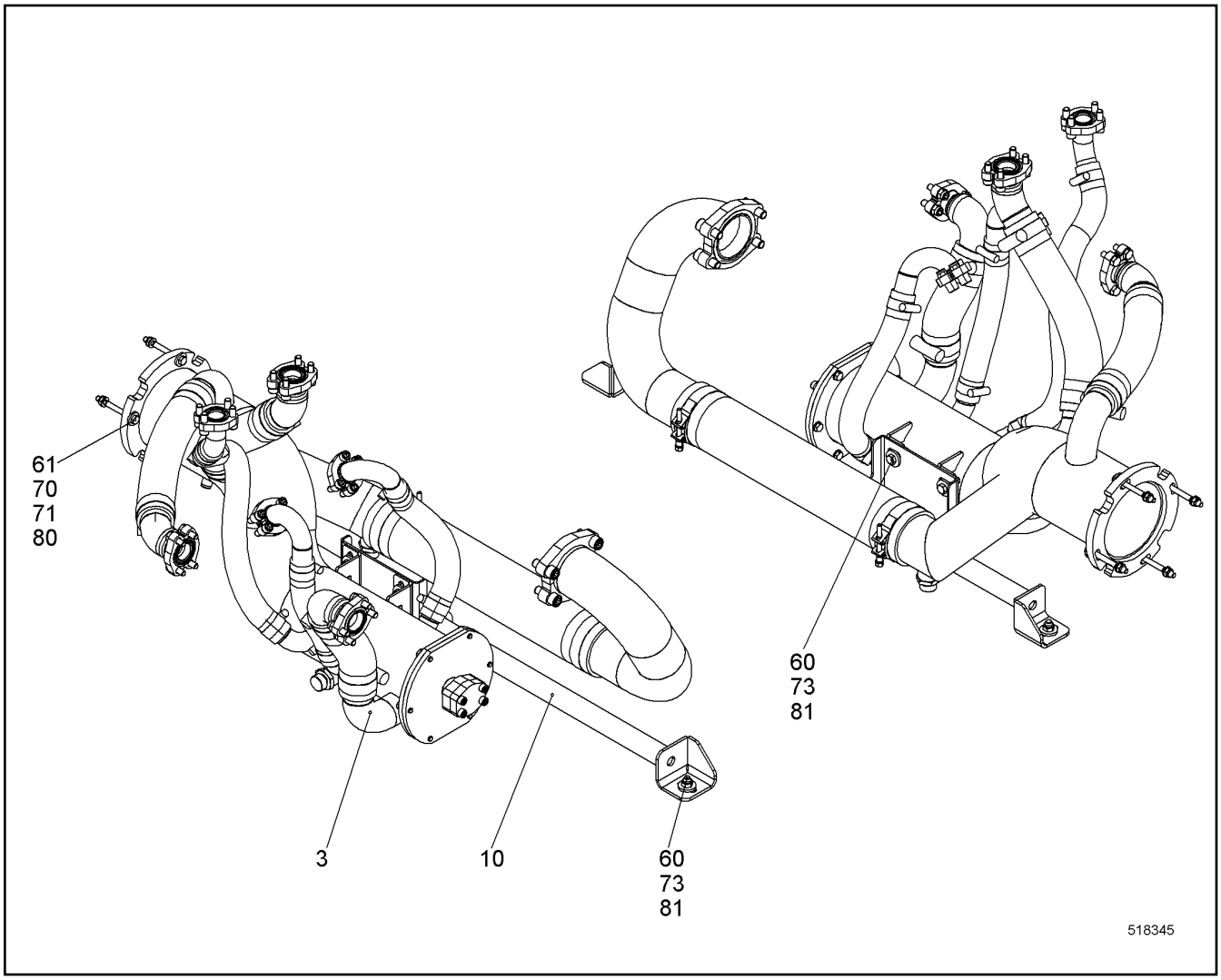

Pos.	Item	Quantity	Description	Bezeichnung	Serie	K
3	10575322	1	INTAKE PIPE OIL CPL ⇨ ❑ 166	ANSAUGROHR OEL KPL		
10	10579104	1	HOLDER	HALTER		
60	406511414	6	HEX SCREW ISO 4017 M12X40 A4-70	SECHSKANTSCHRAUBE		
61	4002195	4	HEX SCREW ISO 4014 M10X100 10.9	SECHSKANTSCHRAUBE		
70	420001114	4	WASHER ISO 7089 10 A4	SCHEIBE		
71	421300214	4	WASHER DIN 6340 10.5 C35	SCHEIBE		
73	4635283	12	WASHER DIN 6340 13 ST	SCHEIBE		
80	411901114	4	HEX NUT ISO 10511 M10 10	SECHSKANTMUTTER		
81	10540495	6	HEX NUT ISO 10511 M12 A4	SECHSKANTMUTTER		

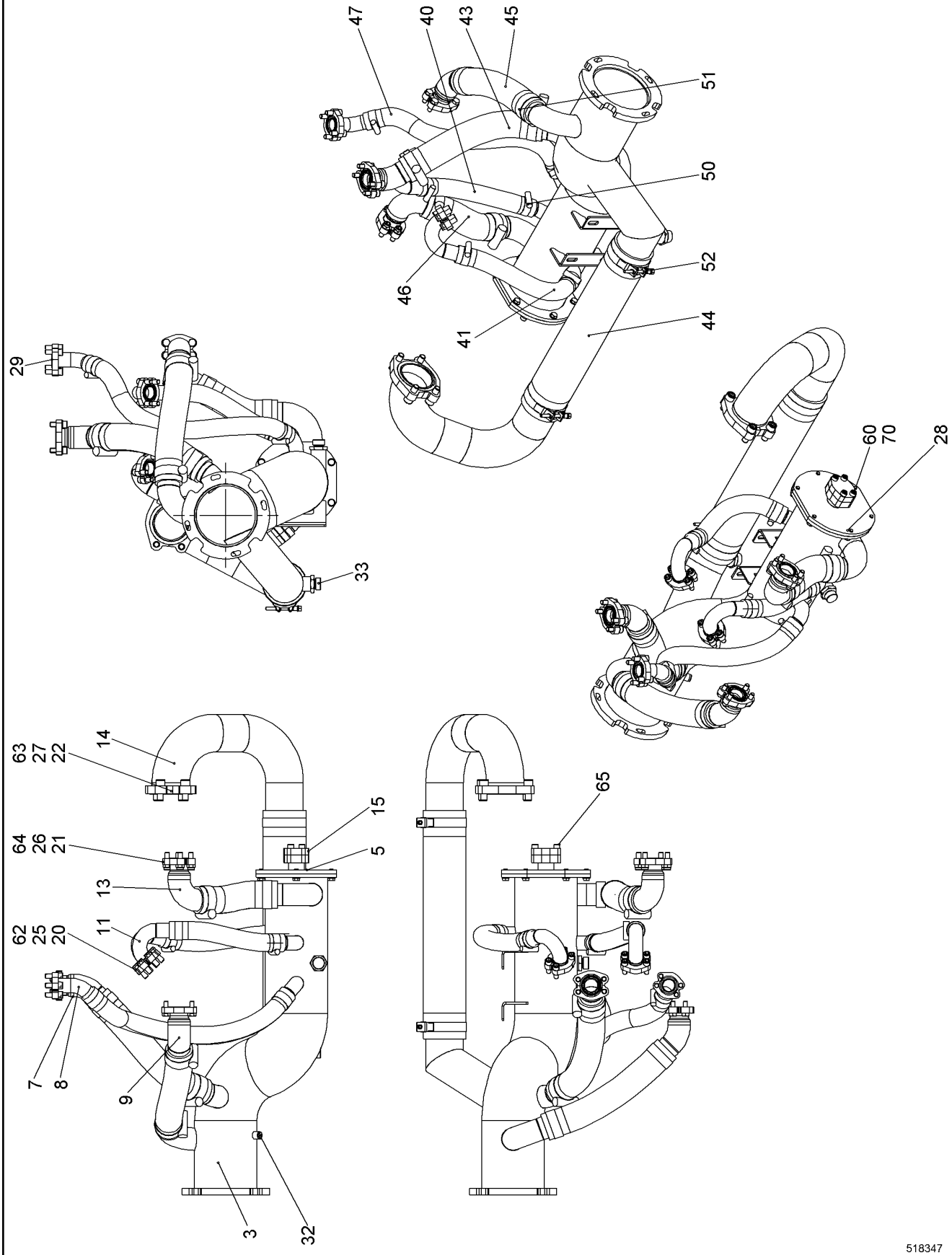

8.7.2015 518347 LIEBHERR	**138281_ETK_001** **INTAKE PIPE OIL CPL** **ANSAUGROHR OEL KPL**	❑ 166 (1/2) **10 57 532 2**

Pos.	Item	Quantity	Description	Bezeichnung	Serie	K
3	10575323	1	SUCTION PIPE OIL ST.CONST.	ANSAUGROHR OEL SCHWK		
5	11217289	1	COVER	DECKEL		
7	592070414	1	INTAKE PIPE CPL	ANSAUGROHR KPL		
8	10598537	1	INTAKE PIPE CPL	ANSAUGROHR KPL		
9	10350932	1	INTAKE PIPE CPL	ANSAUGROHR KPL		
11	10579155	2	INTAKE PIPE CPL	ANSAUGROHR KPL		
13	916526414	1	INTAKE PIPE CPL	ANSAUGROHR KPL		
14	592330814	1	INTAKE PIPE CPL	ANSAUGROHR KPL		
15	510710814	1	SEALING FLANGE SAE	VERSCHLUSSFLANSCH SAE		
20	511502414	6	FLANGE HALF	FLANSCHHAELFTE		
21	510574414	2	FLANGE HALF	FLANSCHHAELFTE		
22	511598114	2	FLANGE HALF	FLANSCHHAELFTE		
25	726431414	2	O-RING	O-RING		
26	510587908	1	O-RING	O-RING		
27	726409714	1	O-RING	O-RING		
28	9177947	1	O-RING	O-RING		
29	726431414	1	O-RING	O-RING		
32	477704914	1	FLANGE JOINT	VERSCHRAUBUNG		
33	403900714	2	OIL DRAIN PLUG G1"X11 MS	OELABLASSSCHRAUBE		
40	11236517	1	SIPHON PIPE	SAUGSCHLAUCH		
41	11236515	1	SIPHON PIPE	SAUGSCHLAUCH		
43	11236514	1	SIPHON PIPE	SAUGSCHLAUCH		
44	592257814	1	SIPHON PIPE	SAUGSCHLAUCH		
45	11236511	1	SIPHON PIPE	SAUGSCHLAUCH		
46	11236518	1	SIPHON PIPE	SAUGSCHLAUCH		
47	11236513	1	SIPHON PIPE	SAUGSCHLAUCH		
50	10579070	6	HOSE CLAMP	SCHLAUCHSCHELLE		
51	790208814	6	HOSE CLAMP	SCHLAUCHSCHELLE		
52	774256114	2	HOSE CLAMP	SCHLAUCHSCHELLE		
60	406511914	6	HEX SCREW ISO 4017 M10X25 A4-70	SECHSKANTSCHRAUBE		
62	409878214	12	HEX SCREW ASME B18.2.1 UNC 7/16"-14UNC	SECHSKANTSCHRAUBE		
63	10544068	4	SOCKET HEAD SCREW ISO 4762 M16X40 10.9	ZYLINDERSCHRAUBE		
64	409878414	4	HEX SCREW ASME B18.2.1 UNC 1/2"-13UNCX1	SECHSKANTSCHRAUBE		
65	407203008	4	SOCKET HEAD SCREW DIN 6912 M10X40 8.8	ZYLINDERSCHRAUBE		
70	420001114	6	WASHER ISO 7089 10 A4	SCHEIBE		

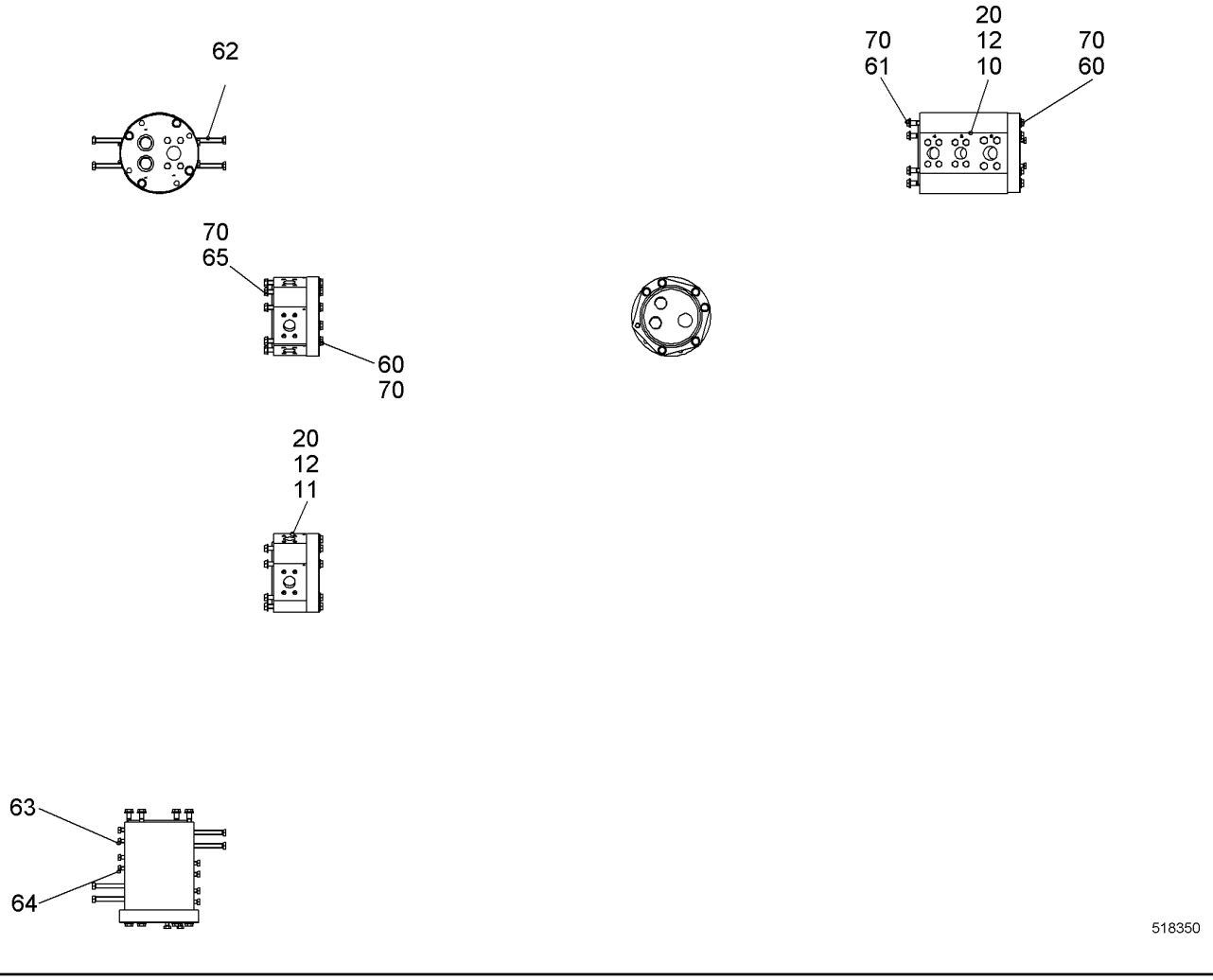

Pos.	Item	Quantity	Description	Bezeichnung	Serie	K
10	953466003	1	INTAKE PIPE	ANSAUGROHR		
12	10595280	2	COVER	DECKEL		
20	726404414	4	O-RING	O-RING		
60	4902260	10	HEX SCREW ISO 4017 M12X55 10.9	SECHSKANTSCHRAUBE		
61	4062009	4	HEX SCREW ISO 4014 M12X50 10.9	SECHSKANTSCHRAUBE		
62	4600385	8	SOCKET HEAD SCREW ISO 4762 M12X100 10.	ZYLINDERSCHRAUBE		
63	4066098	12	HEX SCREW ISO 4017 M10X30 10.9	SECHSKANTSCHRAUBE		
64	4066093	8	HEX SCREW ISO 4017 M10X25 10.9	SECHSKANTSCHRAUBE		
65	4066122	6	HEX SCREW ISO 4017 M12X35 10.9	SECHSKANTSCHRAUBE		
70	420001514	20	WASHER ISO 7089 12 A4	SCHEIBE		

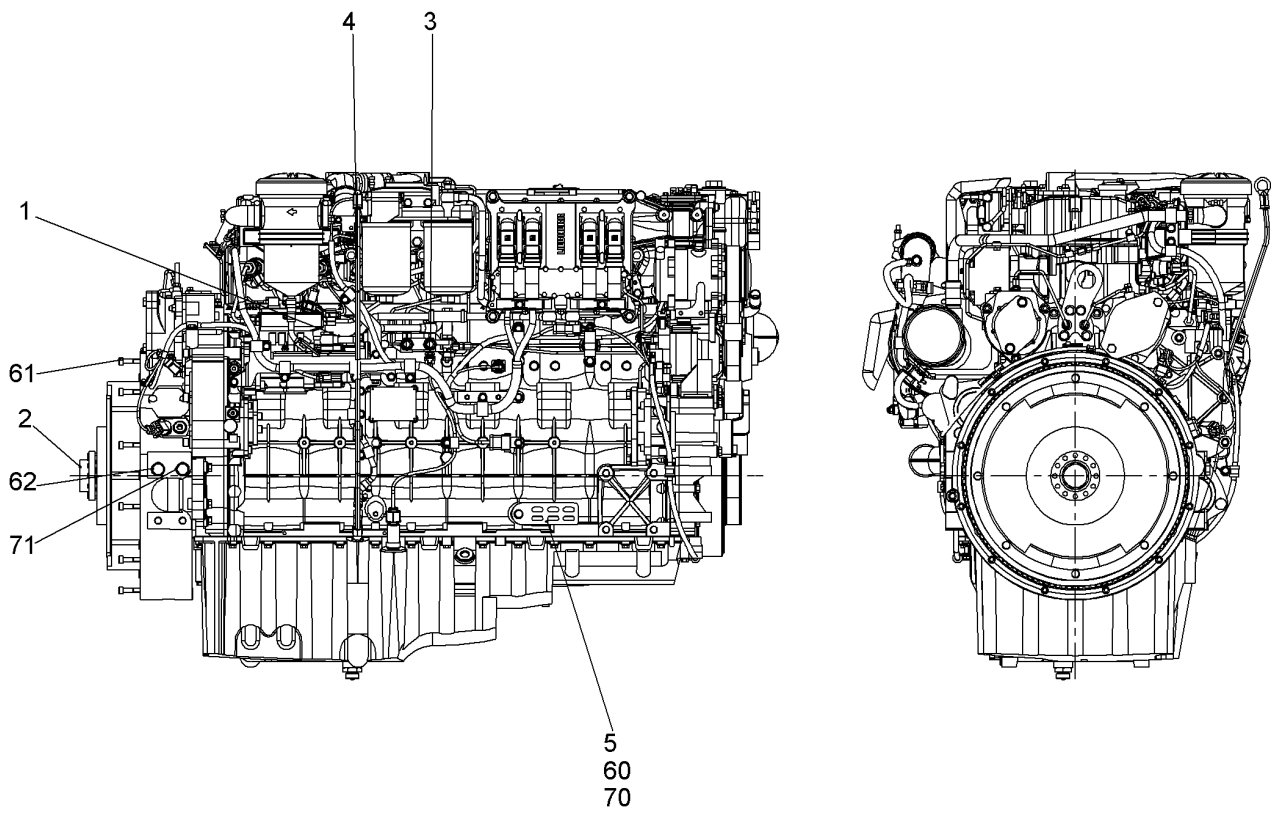

Pos.	Item	Quantity	Description	Bezeichnung	Serie	K
1	10140327	1	DIESEL ENGINE ⇨ ❑ 170	DIESELMOTOR		
2	11249334	1	COUPLING	KUPPLUNG		
4	10142567	1	OIL DIPSTICK CPL.	OELMESSSTAB KPL.		
5	11261002	2	WP	WP		
60	406511914	1	HEX SCREW ISO 4017 M10X25 A4-70	SECHSKANTSCHRAUBE		
61	4001622	12	SOCKET HEAD SCREW ISO 4762 M10X55 10.9	ZYLINDERSCHRAUBE		
62	10539315	4	HEX SCREW ISO 4017 M16X25 10.9	SECHSKANTSCHRAUBE		
70	10554336	1	WASHER ISO 7089 10 ST	SCHEIBE		
71	4901893	4	WASHER ISO 7089 17/30X3 A4	SCHEIBE		

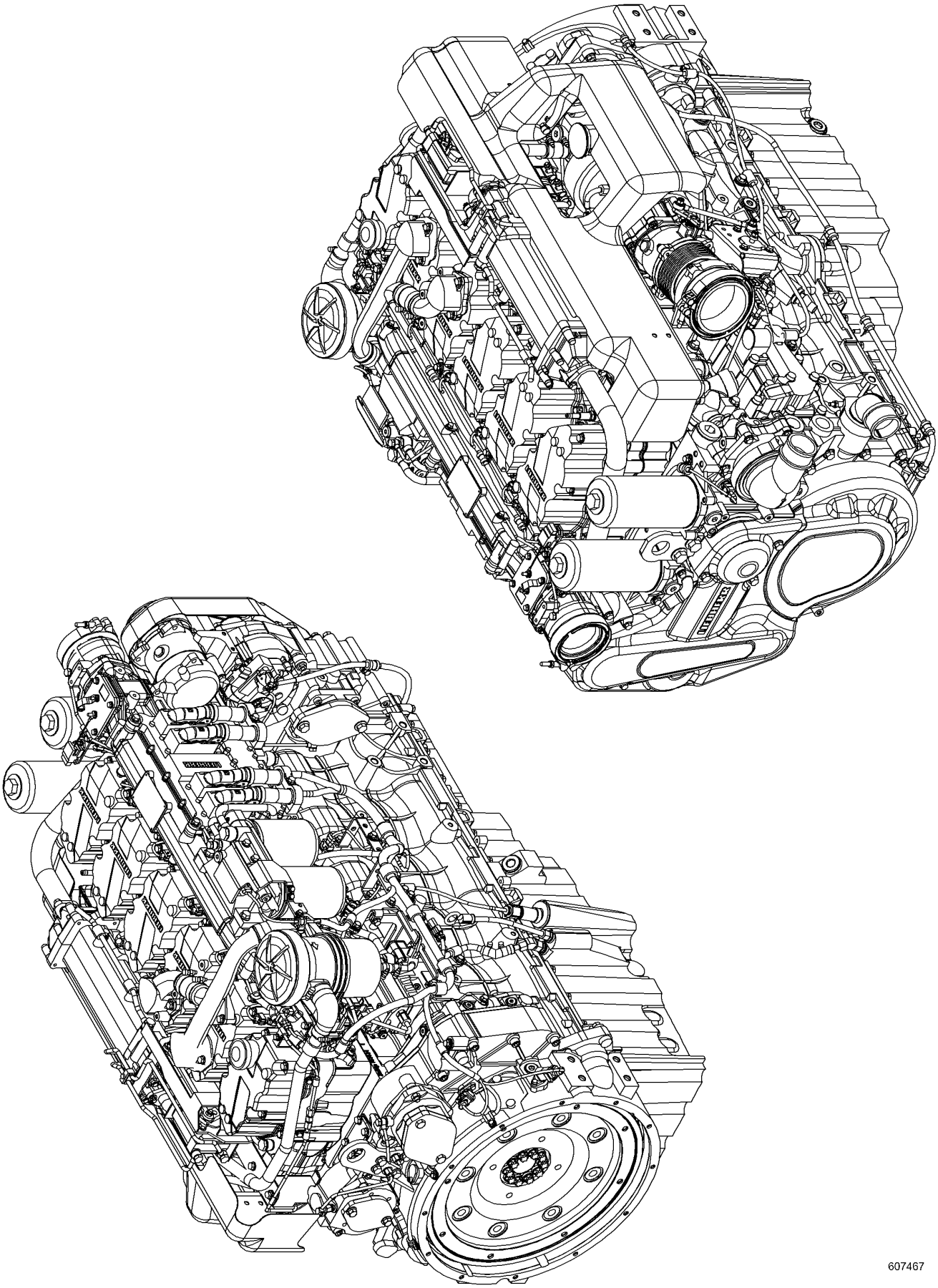
607467

Pos.	Item	Quantity	Description	Bezeichnung	Serie	K
1	10153986	1	CABLE HARNESS	KABELBAUM		
10	10154386	1	CRANKCASE CPL. ⇨ ❑ 174	KURBELGEHAEUSE KPL.		
12	10147686	1	POWER UNIT SUPPORT ATTACHMENT ⇨ ❑ 175	AGGREGATETRAEGER ANBAU		
14	10138450	1	FINAL CONTROL VALVE ⇨ ❑ 176	ENDREGELVENTIL		
15	10142749	6	PISTON COOLING ⇨ ❑ 177	KOLBENKUEHLUNG		
16	10142018	1	CRANKCASE BREATHER ASSEMBLY ⇨ ❑ 179	KURBELGEHAEUSEENTLUEFT.		
20	10148444	1	OIL SUMP WITH FASTENING ⇨ ❑ 181	OELWANNE MIT BEFEST.		
21	10145919	1	OIL DIPSTICK WITH PIPE ⇨ ❑ 184	OELMESSSTAB MIT ROHR		
22	10134517	1	LEVEL SENSOR ⇨ ❑ 185	NIVEAUGEBER		
25	10146716	1	OIL LINE PRE-ASSEMBLY ⇨ ❑ 186	OELLEITUNG VORM.		
40	10142758	6	CYLINDER ⇨ ❑ 187	ZYLINDER		
50	10147437	1	CRANKSHAFT WITH GEAR	KURBELWELLE MIT ZAHNRAD		
51	10147362	1	SET MAIN BEARINGS	KURBELWELLENLAGERSATZ		
52	10121345	1	RK CRANKSHAFT SEAL ⇨ ❑ 188	RS KURBELWELLENDICHTUNG		
53	10141983	1	CRANKSHAFT ADD-ON PARTS	KURBELWELLENANBAUTEILE		
60	11348072	6	CONROD ⇨ ❑ 189	PLEUELSTANGE		
70	10143511	6	PISTON CPL. ⇨ ❑ 190	KOLBEN KPL.		
80	10131768	6	CYL HEAD ADD-ON ⇨ ❑ 191	ZYL KOPF ANBAU		
81	10148438	6	ROCKER ARM BRACKET CPL. ⇨ ❑ 194	KIPPHEBELBOCK KPL.		
82	10134751	3	CYLINDER HEAD COVER ASSEMBLY ⇨ ❑ 195	ZYLINDERKOPFDECKEL ANBAU		
83	10126535	1	CYLINDER HEAD COVER ASSEMBLY ⇨ ❑ 196	ZYLINDERKOPFDECKEL ANBAU		
84	10134696	2	CYLINDER HEAD COVER ASSEMBLY ⇨ ❑ 198	ZYLINDERKOPFDECKEL ANBAU		
100	10138231	1	CAMSHAFT CPL.	NOCKENWELLE KPL.		
110	9079870	6	CONTROL PARTS	STEUERUNGSTEIL		
130	10129481	1	OIL COOLER ADD-ON ⇨ ❑ 199	OELKUEHLER ANBAU		
140	10133945	1	LUBRICATING OIL PUMP ⇨ ❑ 202	SCHMIEROELPUMPE		
141	10133947	1	SUCTION PUMP WITH FASTENING ⇨ ❑ 203	ABSAUGPUMPE MIT BEFEST.		
150	10142942	1	LUBE OIL FILTER ASSEMBLY ⇨ ❑ 205	SCHMIEROELFILTER ANBAU		
171	10150857	1	HIGH PRESSURE PUMP W.FASTENING	HOCHDRUCKPUMPE MIT BEFEST		
180	10153606	1	REPAIR SET DRIVE ⇨ ❑ 206	RS ANTRIEB		
190	10152867	6	INJECTOR WITH FASTENING ⇨ ❑ 207	INJEKTOR MIT BEFEST.		
191	10153151	6	PRESSURE ADAPTER ⇨ ❑ 208	DRUCKROHRSTUTZEN		
192	10135432	6	INJECTOR FASTENING ⇨ ❑ 212	BEFESTIGUNG INJEKTOR		

Pos.	Item	Quantity	Description	Bezeichnung	Serie	K
193	10135434	6	PRESSURE ADAPTER FASTENING ⇨ ❑ 213	BEFESTIGUNG DRUCKROHRST		
201	10146797	1	FUEL FINE-FILTER ASSEMBLY ⇨ ❑ 214	KRAFTSTOFF-FEINFILTERANBA		
212	10143339	1	FUEL LINES ⇨ ❑ 216	KRAFTSTOFFLEITUNGEN		
214	10145885	1	LEAK OIL RETURN LINE ⇨ ❑ 217	LECKOELRUECKLAUF		
215	10143828	1	INJECTION LINES ⇨ ❑ 218	EINSPRITZLEITUNGEN		
217	10141790	1	CONNECTING PIECE PRE-ASS. ⇨ ❑ 219	ANSCHLUSSSTUECK VORM.		
220	10147366	1	AIR INTAKE PIPE ASS. ⇨ ❑ 220	LUFTANSAUGROHR ANBAU		
221	10147369	1	INTAKE STACK ASSEMBLY ⇨ ❑ 221	ANSAUGSTUTZEN ANBAU		
224	10147364	1	AIR INTAKE ASSEMBLY ⇨ ❑ 222	LUFTANSAUGUNG ANBAU		
230	10141801	1	CONNECTING LINE ADD-ON	VERBINDUNGSLEITUNG ANBAU		
260	9078314	1	HEATING FLANGE ADD-ON ⇨ ❑ 223	HEIZFLANSCH ANBAU		
331	9072906	1	INTERMEDIATE WHEEL CPL ⇨ ❑ 225	ZWISCHENRAD KPL		
340	10142860	1	AIR COND. COMPRESSOR ADD-ON ⇨ ❑ 226	KLIMAKOMPRESSOR ANBAU		
342	10146117	1	COVERING ASSEMBLY ⇨ ❑ 228	ABDECKUNG ANBAU		
370	10142734	1	WATER PUMP WITH FASTENING ⇨ ❑ 229	WASSERPUMPE MIT BEFEST.		
380	10148215	1	THERMOSTAT HOUSING ASSEMBLY ⇨ ❑ 230	THERMOSTATGEHAEUSE ANBA		
381	10148217	1	PIPELINE INSTALLATION ⇨ ❑ 231	ROHRLEITUNG ANBAU		
382	10142742	1	COOLANT PIPE BEND ADD-ON ⇨ ❑ 232	KUEHLMITTELKRUEMMER ANBA		
387	10142744	1	COOLING WATER AIR BLEEDING ⇨ ❑ 233	KUEHLWASSERENTLUEFTUNG		
388	10146012	1	MANIFOLD FOR WATER CPL.	WASSERSAMMELLEITUNG KPL.		
410	10141444	1	EXHAUST PIPE ASSEMBLY ⇨ ❑ 234	ABGASROHR ANBAU		
415	10142591	1	HEAT PROTECTION W.FASTENING	HITZESCHUTZ MIT BEFEST.		
430	10140136	1	EXHAUST TC MOUNTING ⇨ ❑ 236	ATL-ANBAU		
432	10145112	1	EXHAUST NOZZLE ATTACHMENT ⇨ ❑ 237	ABGASSTUTZEN ANBAU		
436	10146224	1	CYCLE VALVE ⇨ ❑ 238	TAKTVENTIL		
440	10145845	1	GENERATOR, PRE-ASSEMBLED ⇨ ❑ 239	GENERATOR VORM.		
450	10120372	1	STARTER INSTALLATION ⇨ ❑ 240	STARTER ANBAU		
452	10115664	1	LOCKING PIECES	VERSCHLUSSTEILE		
480	9079823	1	TRANSPORT DEVICE ATTACHEMENT	TRANSPORTVORRICHTUNG AN		
481	10142864	1	TRANSPORT DEVICE ATTACHEMENT ⇨ ❑ 241	TRANSPORTVORRICHTUNG AN		
520	10115577	1	FLYWHEEL HOUSING MOUNTING ⇨ ❑ 242	SCHWUNGRADGEHAEUSE ANBA		
521	10116110	1	LOCKING PIECE	VERSCHLUSSTEIL		
522	10119128	1	LOCKING PIECES ⇨ ❑ 243	VERSCHLUSSTEILE		

Pos.	Item	Quantity	Description	Bezeichnung	Serie	K
524	10128439	1	LOCKING PIECES ⇨ ❑ 244	VERSCHLUSSTEILE		
526	10127979	1	LOCKING PIECES ⇨ ❑ 245	VERSCHLUSSTEILE		
530	10118929	1	FLYWHEEL ASSEMBLY ⇨ ❑ 246	SCHWUNGRAD ANBAU		
570	10145725	1	MOTOR CONTROL DEVICE ⇨ ❑ 247	MOTORSTEUERGERAET		
571	10146795	1	CONTROL BOX ANNEXE	STEUERGERAET ANBAU		
580	10150288	1	CABLE HARNESS MOUNTING ⇨ ❑ 248	KABELBAUM ANBAU		
581	10142977	1	ENGINE CONTROL SENSORS ⇨ ❑ 250	MOTORREGELUNGSENSORIK		
582	10151665	1	CABLE LOOM	KABELSATZ		
630	10142747	1	LOCKING PIECES	VERSCHLUSSTEILE		
650	9078249	1	LOCKING PIECES	VERSCHLUSSTEILE		
652	10144027	1	LOCKING PIECES	VERSCHLUSSTEILE		
654	9078301	1	LOCKING PIECES	VERSCHLUSSTEILE		
656	10146374	1	LOCKING PIECES ⇨ ❑ 252	VERSCHLUSSTEILE		

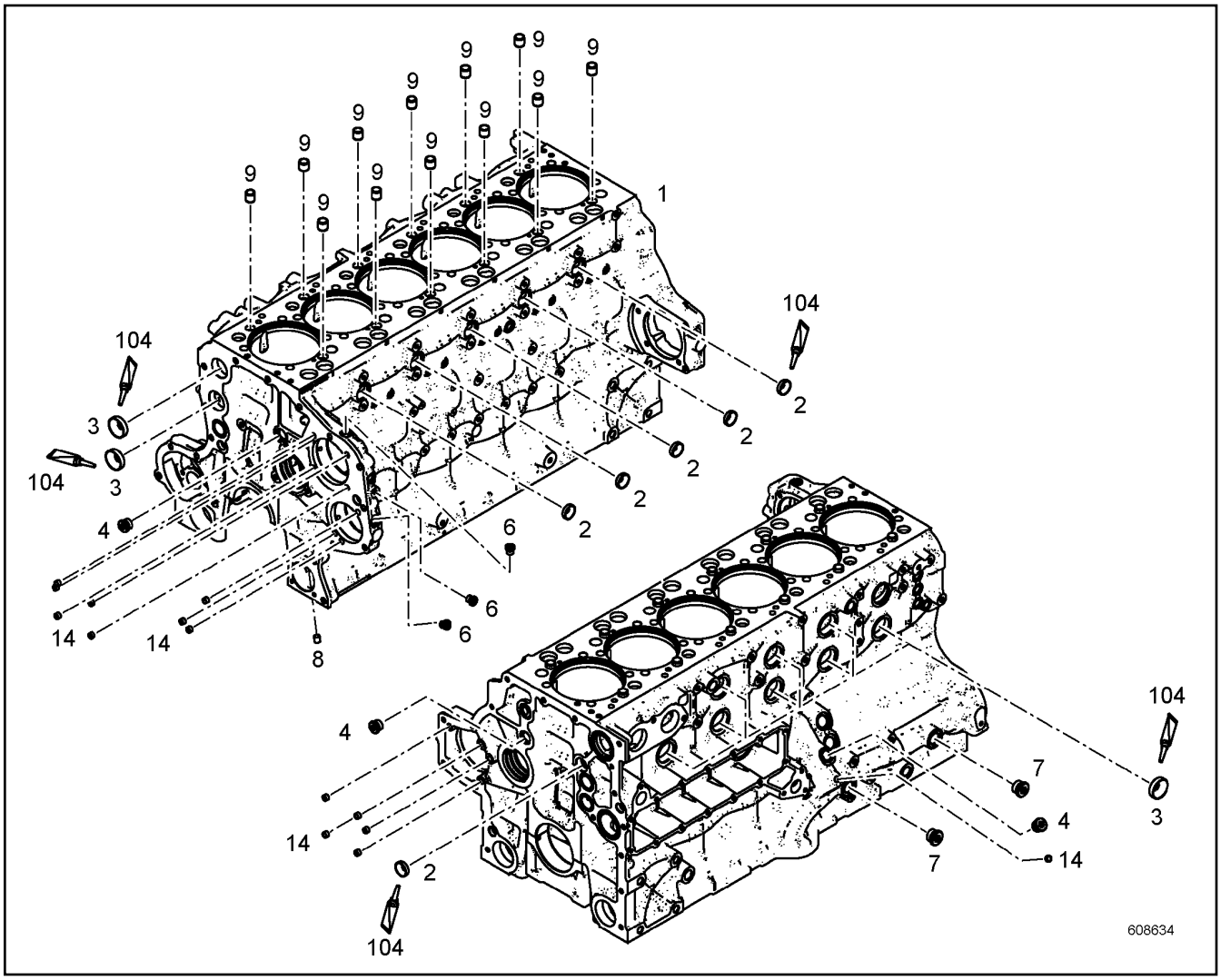

Pos.	Item	Quantity	Description	Bezeichnung	Serie	K
1	10154385	1	CRANKCASE PRE-ASS.	KURBELGEHAEUSE VORM.		
2	4980362	6	END COVER	VERSCHLUSSDECKEL		
3	4001664	10	END COVER	VERSCHLUSSDECKEL		
4	7380177	3	SCREW PLUG	VERSCHLUSSSCHRAUBE		
6	7380566	3	SCREW PLUG	VERSCHLUSSSCHRAUBE		
7	7381457	2	SCREW PLUG	VERSCHLUSSSCHRAUBE		
8	7382069	1	SEALING PLUG	DICHTSTOPFEN		
9	9074798	12	TIGHT FIT SLEEVE 16.5X20X20 S235JR;EN 10	PASSHUELSE		
14	10030837	14	SEALING PLUG	DICHTSTOPFEN		
104	8655023	1	GLUE	KLEBSTOFF		

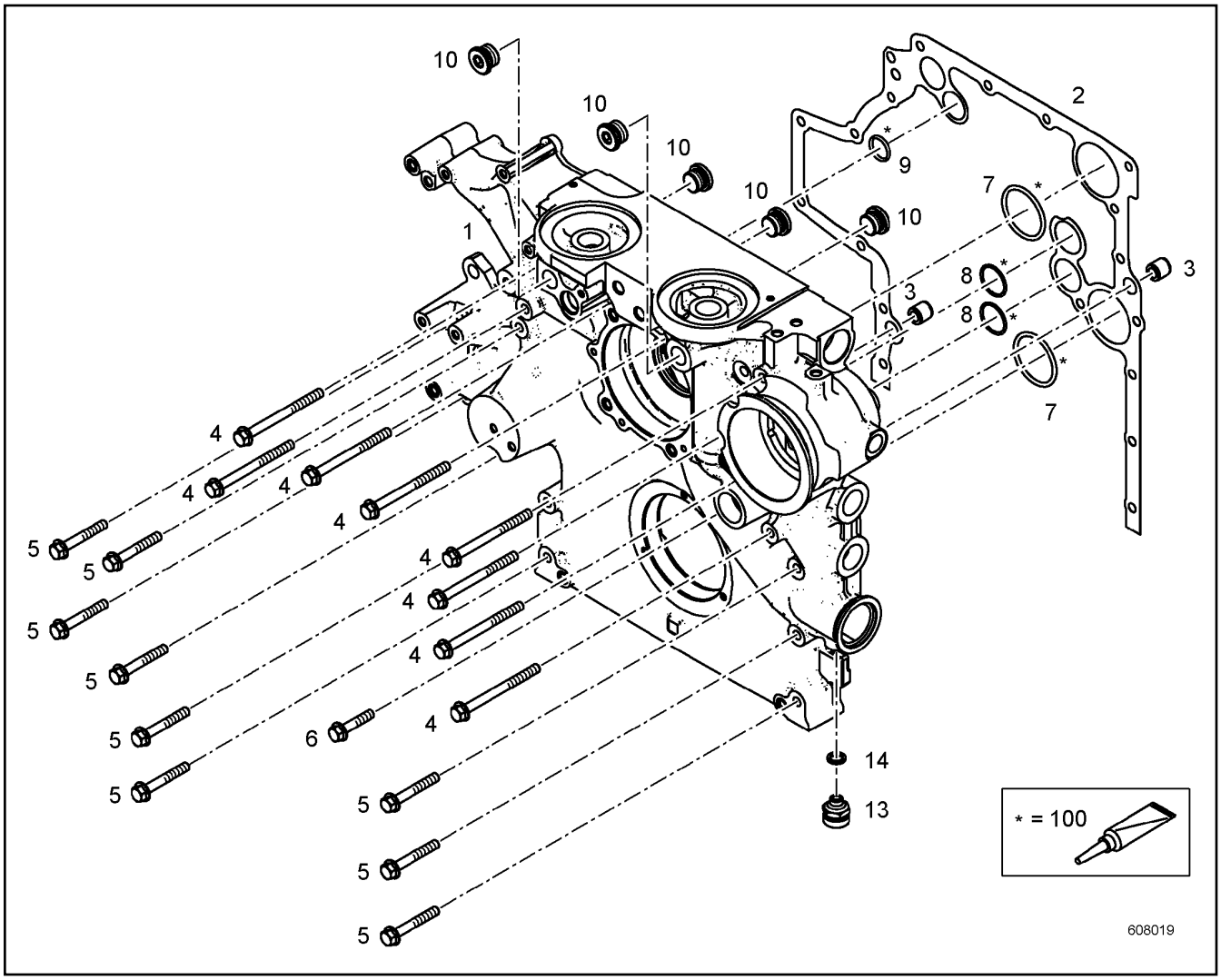

Pos.	Item	Quantity	Description	Bezeichnung	Serie	K
1	10148254	1	AGGREGATE SUPPORT PRE-ASS.	AGGREGATETRAEGER VORM.		
2	10126738	1	SEAL	DICHTUNG		
3	10134348	2	TIGHT FIT SLEEVE 16X20X20	PASSHUELSE		
4	10037312	8	HEX SCREW EN 1665 M10X120 10.9	SECHSKANTSCHRAUBE		
5	10114153	9	HEX SCREW DIN 6921 M10X70 10.9	SECHSKANTSCHRAUBE		
6	10035580	1	HEX SCREW DIN 6921 M10X50 10.9	SECHSKANTSCHRAUBE		
7	7381779	2	O-RING	O-RING		
8	7380653	2	O-RING	O-RING		
9	10004261	1	O-RING	O-RING		
10	10041903	5	SCREW PLUG	VERSCHLUSSSCHRAUBE		
13	10011832	1	VALVE	VENTIL		
14	7381225	1	SEALING RING	DICHTRING		
100	10285708	1	GREASE	FETT		

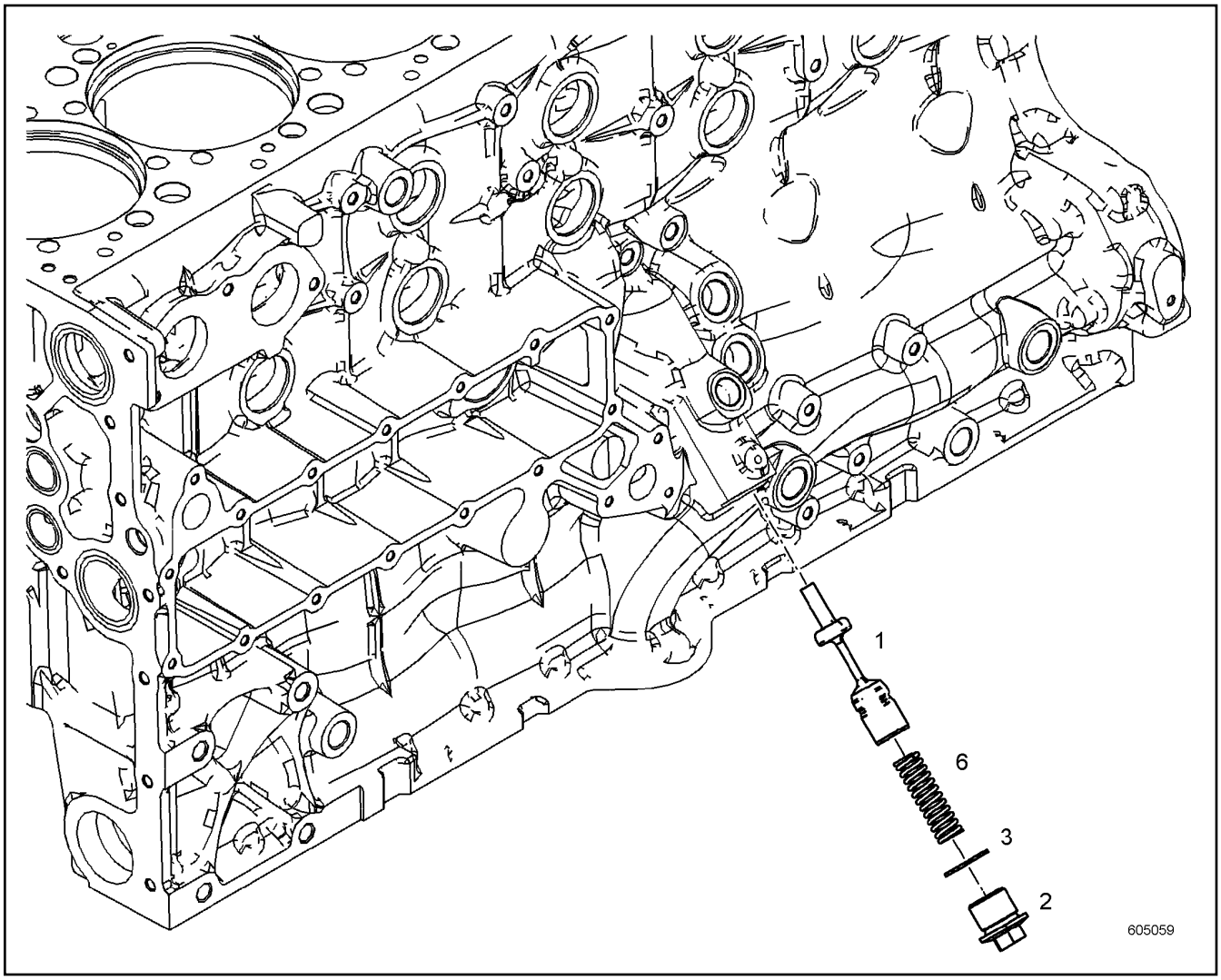

Pos.	Item	Quantity	Description	Bezeichnung	Serie	K
1	10149655	1	PISTON	KOLBEN		
2	10137918	1	SCREW PLUG 11SMNPB30+C;EN 10277-3	VERSCHLUSSSCHRAUBE		
3	7101021	1	SEALING RING	DICHTRING		
6	11118160	1	PRESSURE SPRING	DRUCKFEDER		

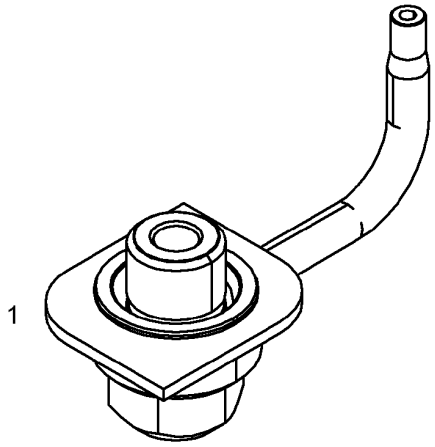

607381

Pos.	Item	Quantity	Description	Bezeichnung	Serie	K
1	10151634	1	PISTON COOLING PRE-ASS. ⇨ ❑ 178	KOLBENKUEHLUNG VORM.		

OHNE BILD
WITHOUT ILLUSTRATION
SANS PLANCHE
SIN FIG.
SEM ILUSTRAÇÃO
БЕЗ ИЗОБРАЖЕНИЯ

600000

Pos.	Item	Quantity	Description	Bezeichnung	Serie	K
1	10151636	1	PISTON COOLING NOZZLE	KOLBENKUEHLDUESE		
2	10151637	1	HOLLOW SCREW	HOHLSCHRAUBE		

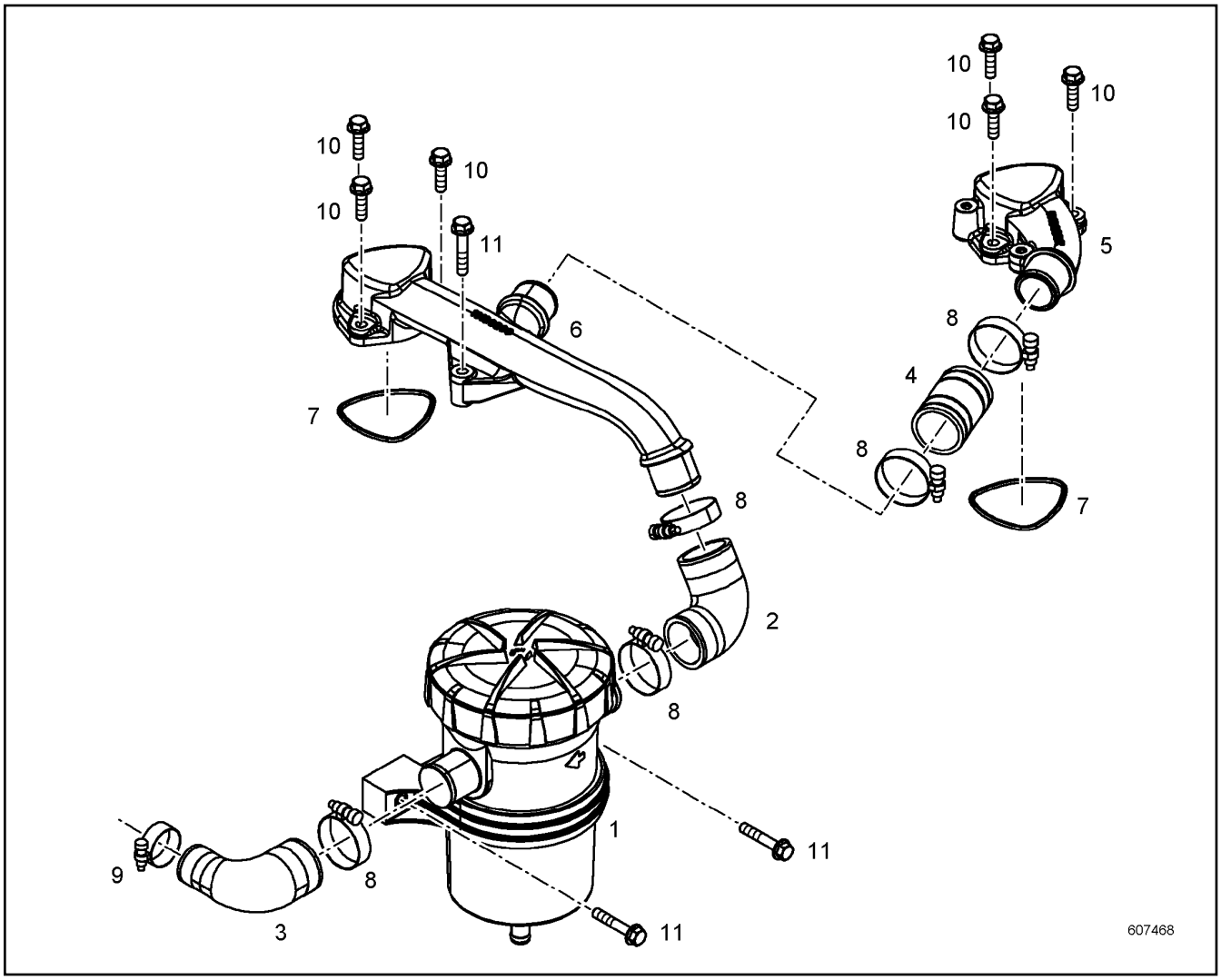

Pos.	Item	Quantity	Description	Bezeichnung	Serie	K
1	10136800	1	CRANKCASE BREATHER ⇨ ❑ 180	KURBELGEHAEUSEENTLUEFTUN		
2	10126091	1	RUBBER CONNECTION	GUMMIMUFFE		
3	10133641	1	RUBBER CONNECTION	GUMMIMUFFE		
4	10126090	1	RUBBER CONNECTION	GUMMIMUFFE		
5	10139393	1	CONNECTION PIECE	ANSCHLUSSSTUECK		
6	10139391	1	CONNECTION PIECE	ANSCHLUSSSTUECK		
7	7381593	2	O-RING	O-RING		
8	5700024	5	HOSE CLAMP	SCHLAUCHSCHELLE		
9	5004927	1	HOSE CLAMP	SCHLAUCHSCHELLE		
10	10007782	6	HEX SCREW EN 1665 M8X30 8.8	SECHSKANTSCHRAUBE		
11	10016907	3	HEX SCREW EN 1665 M8X45 8.8	SECHSKANTSCHRAUBE		

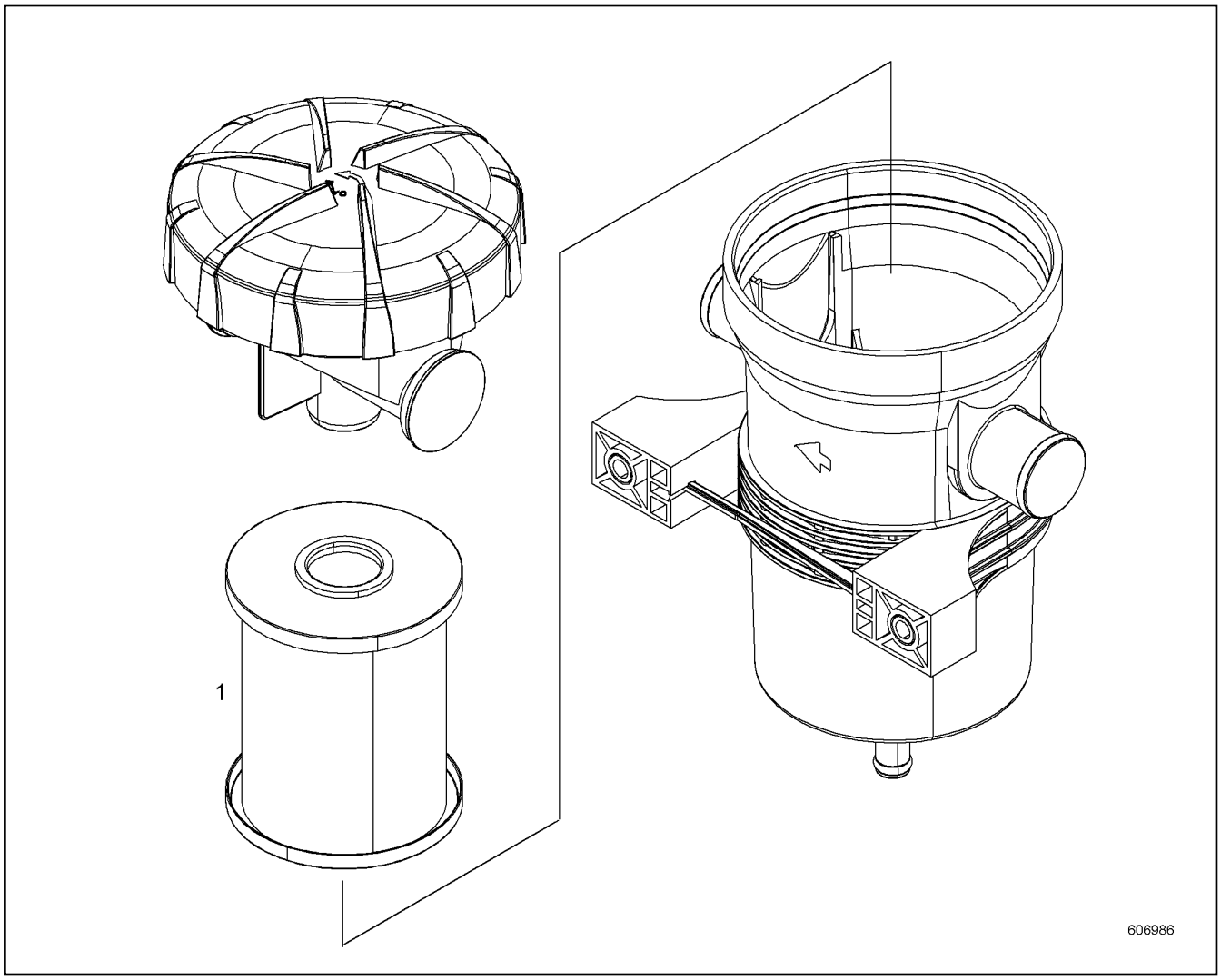

Pos.	Item	Quantity	Description	Bezeichnung	Serie	K
1	10136801	1	SPARE ELEMENT	ERSATZELEMENT		

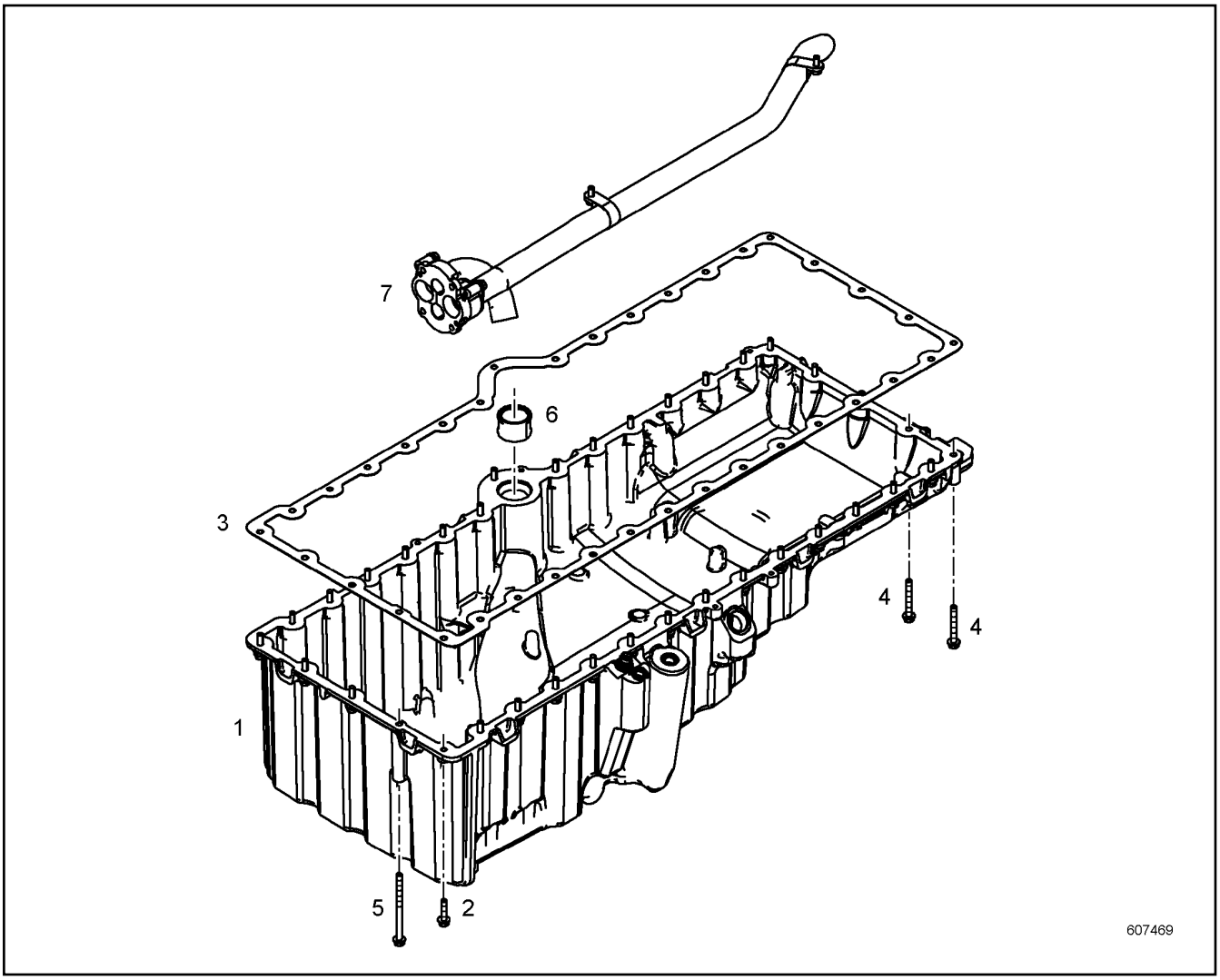

Pos.	Item	Quantity	Description	Bezeichnung	Serie	K
1	10148615	1	OIL SUMP PRE-ASS. ⇨ ❑ 182	OELWANNE VORM.		
2	10113711	33	HEX SCREW EN 1665 M8X35 8.8	SECHSKANTSCHRAUBE		
3	10126427	1	SEAL	DICHTUNG		
4	10100304	2	HEX SCREW EN 1665 M8X65 8.8	SECHSKANTSCHRAUBE		
5	10017158	1	HEX SCREW EN 1665 M8X120 8.8	SECHSKANTSCHRAUBE		
6	10125386	1	PLUG-IN PIPE	STECKROHR		
7	10139539	1	PIPELINE INSTALLATION	ROHRLEITUNG ANBAU		

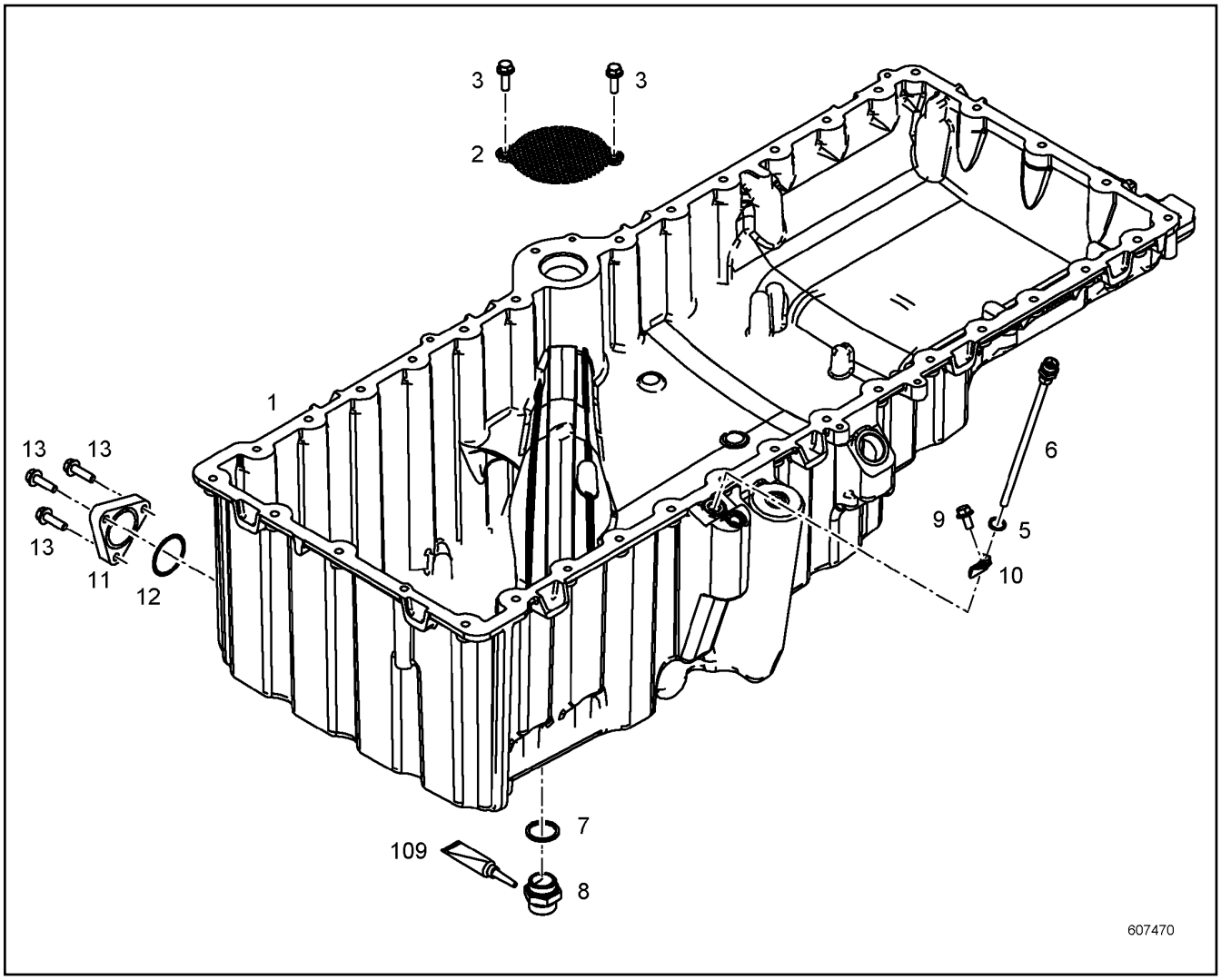

Pos.	Item	Quantity	Description	Bezeichnung	Serie	K
1	10148614	1	OIL SUMP	OELWANNE		
2	10135441	1	PERFORATED PLATE	LOCHBLECH		
3	11004752	2	HEX SCREW DIN 6921 8.8	SECHSKANTSCHRAUBE		
5	7101008	1	SEALING RING	DICHTRING		
6	9080660	1	TUBE	ROHR		
7	7101021	1	SEALING RING	DICHTRING		
8	5004624	1	OIL DRAIN PLUG ⇨ ❑ 183	OELABLASSSCHRAUBE		
9	10005511	1	HEX SCREW DIN EN 1665 M8X16 8.8	SECHSKANTSCHRAUBE		
10	10122693	1	CLAMP	SCHELLE		
11	10149013	1	COVER	DECKEL		
12	7380423	1	O-RING	O-RING		
13	10007782	3	HEX SCREW EN 1665 M8X30 8.8	SECHSKANTSCHRAUBE		
109	8627609	1	SEALANT	DICHTUNGSMITTEL		

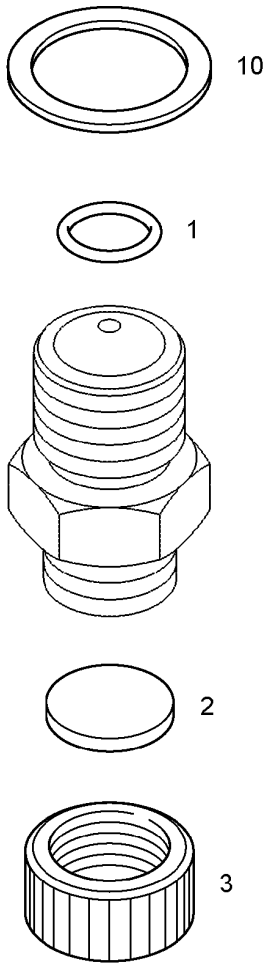

Pos.	Item	Quantity	Description	Bezeichnung	Serie	K
1	7264625	1	O-RING	O-RING		
2	7011131	1	SEAL	DICHTUNG		
3	7013456	1	PROTECTING CAP	SCHUTZKAPPE		
10	7101021	1	SEALING RING	DICHTRING		

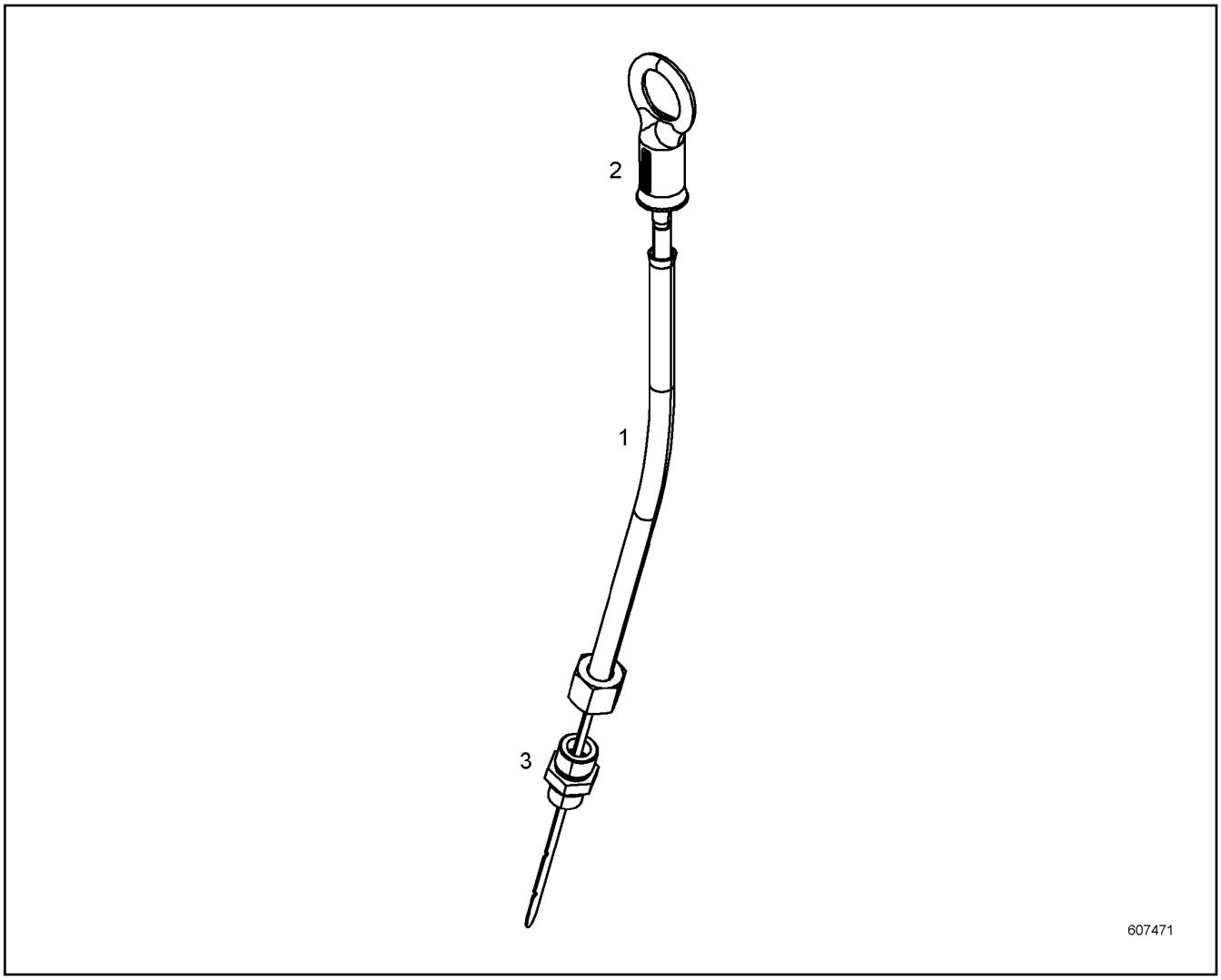

Pos.	Item	Quantity	Description	Bezeichnung	Serie	K
1	9266847	1	GUIDING PIPE	FUEHRUNGSROHR		
2	10145918	1	OIL-LEVEL GAUGE	OELMESSSTAB		
3	4981235	1	FLANGE JOINT	VERSCHRAUBUNG		

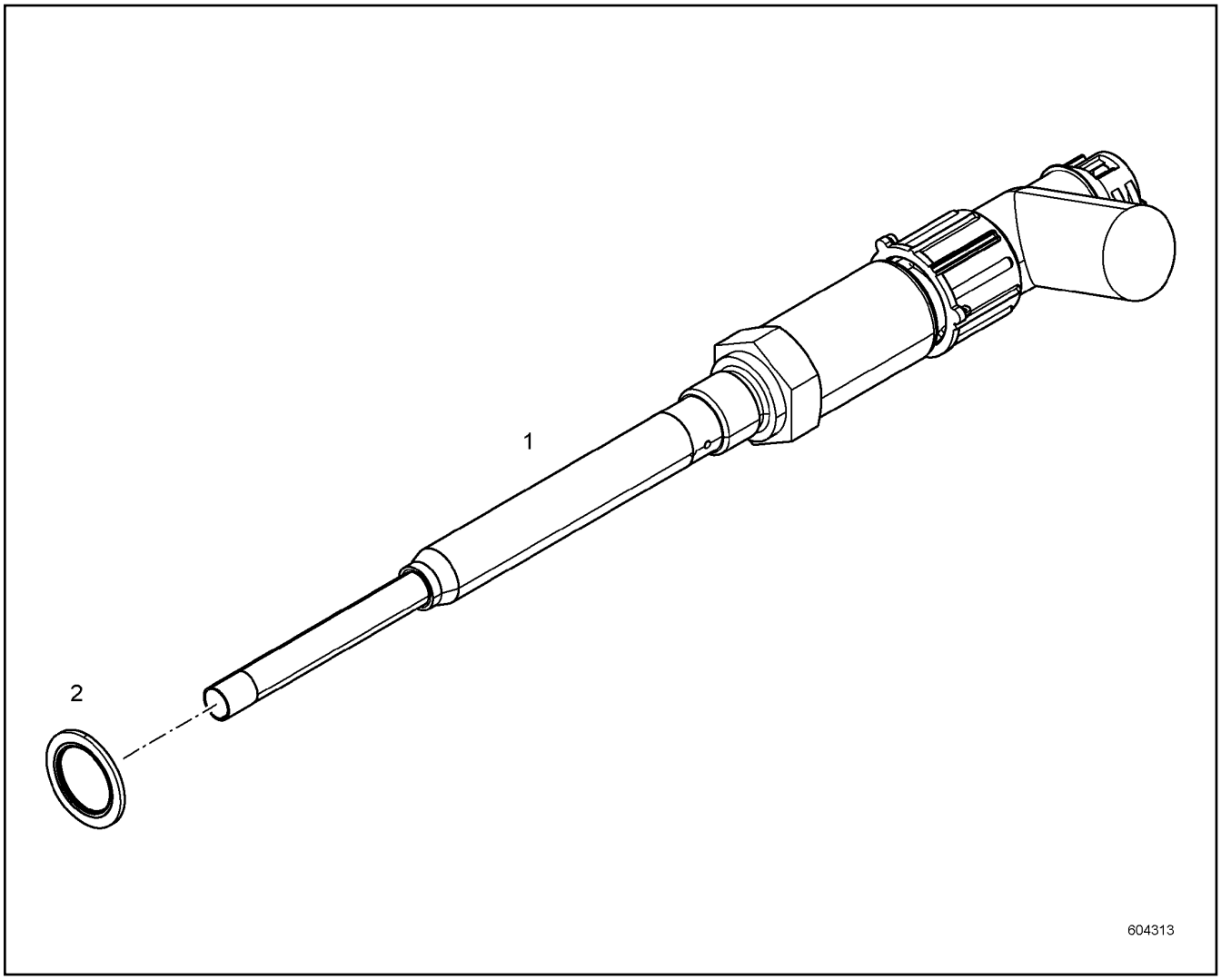

Pos.	Item	Quantity	Description	Bezeichnung	Serie	K
1	11088130	1	LEVEL SENSOR	NIVEAUGEBER		
2	10011868	1	SEALING RING	DICHTRING		

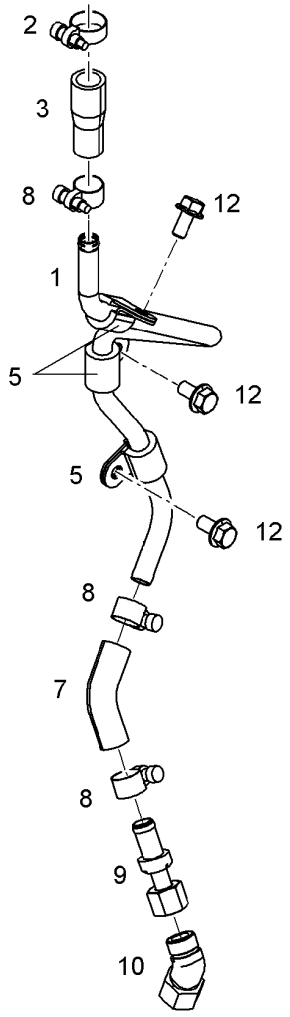

Pos.	Item	Quantity	Description	Bezeichnung	Serie	K
1	10131350	1	OIL RETURN PIPE	OELRUECKLAUFLEITUNG		
2	4901138	1	HOSE CLAMP	SCHLAUCHSCHELLE		
3	10123671	1	RUBBER CONNECTION	GUMMIMUFFE		
5	7381629	3	CLAMP	SCHELLE		
7	10126317	1	RUBBER CONNECTION	GUMMIMUFFE		
8	4981029	3	HOSE CLAMP	SCHLAUCHSCHELLE		
9	10119971	1	NON-RETURN VALVE	RUECKSCHLAGVENTIL		
10	7027665	1	FLANGE JOINT	VERSCHRAUBUNG		
12	10005078	3	HEX SCREW EN 1665 M8X16 8.8	SECHSKANTSCHRAUBE		

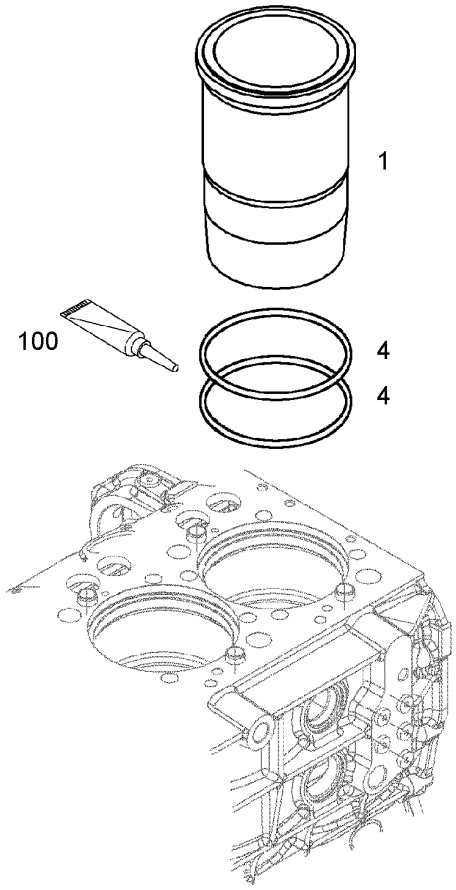

Pos.	Item	Quantity	Description	Bezeichnung	Serie	K
1	10150966	1	CYLINDER BUSHING	ZYLINDERBUCHSE		
4	10282774	2	O-RING	O-RING		
100	10285708	1	GREASE	FETT		

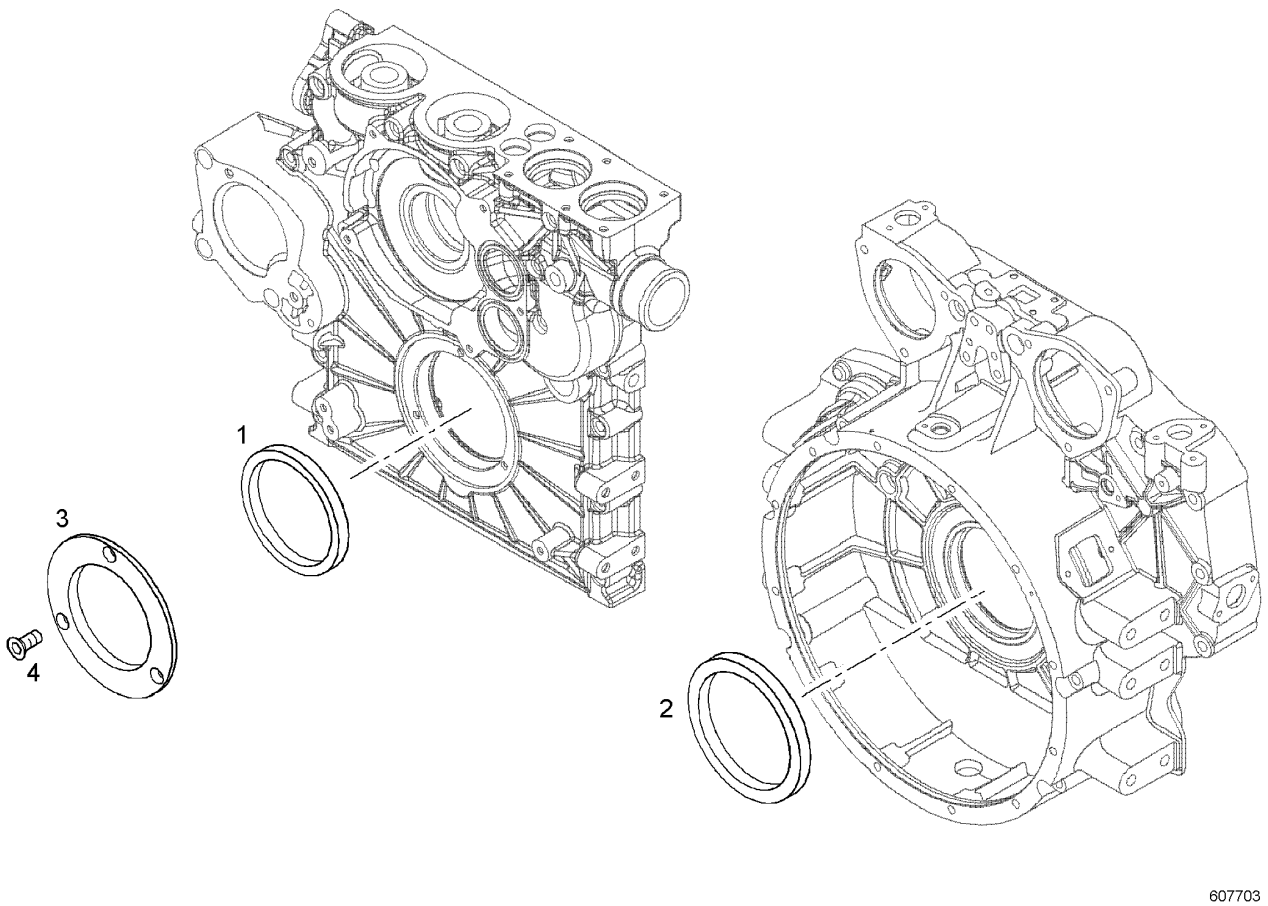

Pos.	Item	Quantity	Description	Bezeichnung	Serie	K
1	10121952	1	RK CRANKSHAFT SEAL	RS KURBELWELLENDICHTUNG		
2	10121335	1	RK CRANKSHAFT SEAL	RS KURBELWELLENDICHTUNG		
3	10120443	1	GUARD RING	SCHUTZRING		
4	10342191	3	COUNTERSUNK SCREW BN 4851 M8X20 8.8	SENKSCHRAUBE		

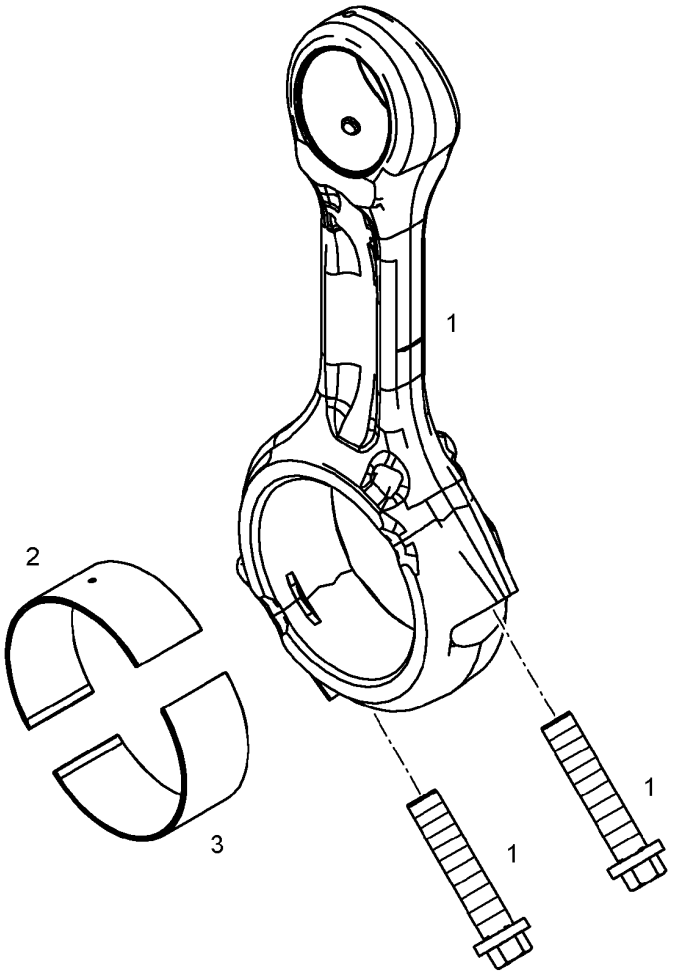

Pos.	Item	Quantity	Description	Bezeichnung	Serie	K
1	11348054	1	CONROD	PLEUELSTANGE		
2	9075607	1	CONNECTING ROD BEARING	PLEUELLAGER		
3	9073699	1	CONNECTING ROD BEARING	PLEUELLAGER		

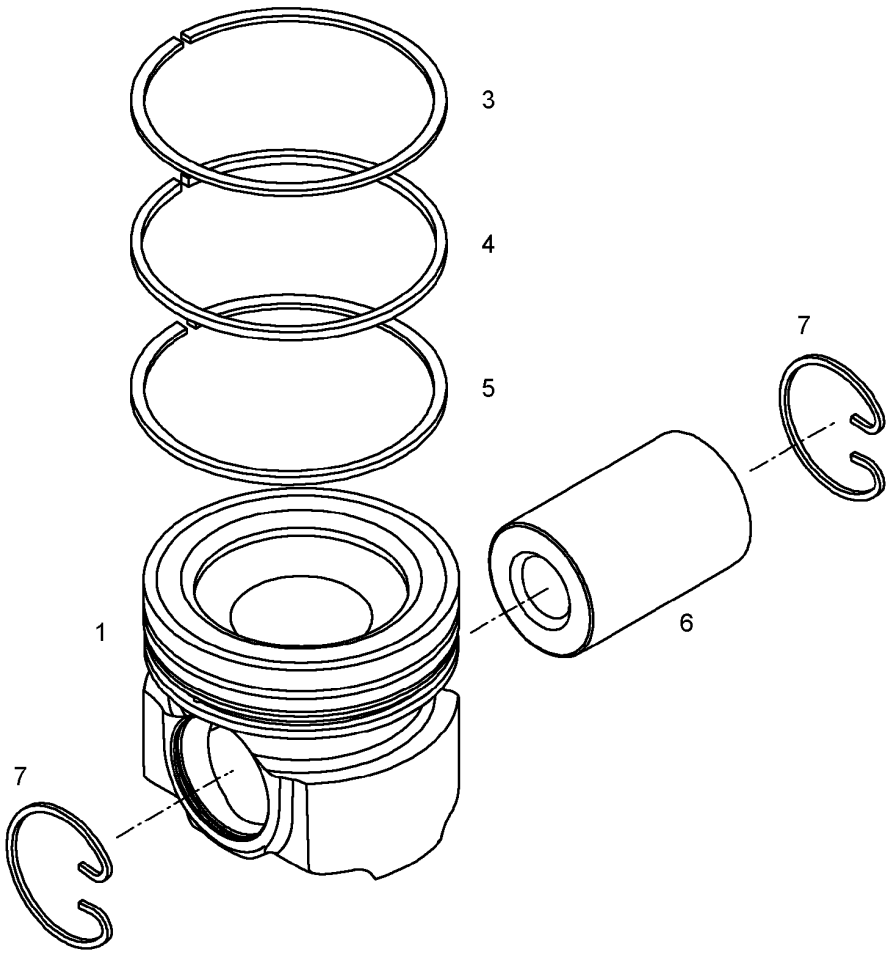

Pos.	Item	Quantity	Description	Bezeichnung	Serie	K
1	10143510	1	PISTON	KOLBEN		
3	10143512	1	KBA-RING	KBA-RING		
4	10140968	1	PISTON RING MG	M-RING		
5	10142429	1	DSF RING	DSF-RING		
6	10282849	1	PISTON BOLT 16MNCR5	KOLBENBOLZEN		
7	4980482	2	SNAP RING 52X2 FST	SPRENGRING		

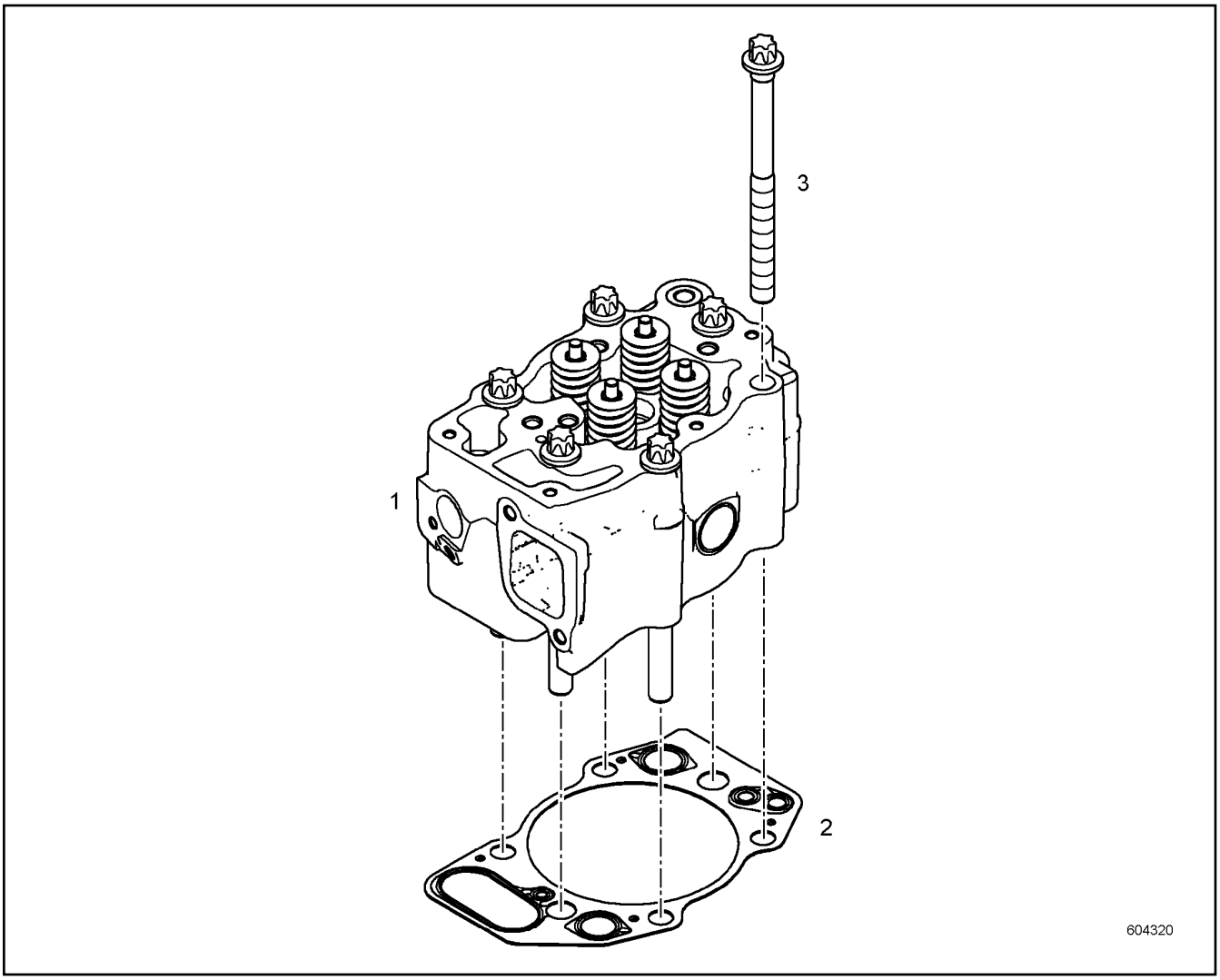

Pos.	Item	Quantity	Description	Bezeichnung	Serie	K
1	10137286	1	CYLINDER HEAD PRE-ASS. ⇨ ❑ 192	ZYLINDERKOPF VORM.		
2	10133667	1	CYLINDER HEAD GASKET	ZYLINDERKOPFDICHTUNG		
3	10125439	6	HEXALOBULAR HEAD SCREW M16X210 10.9	SECHSRUNDSCHRAUBE		

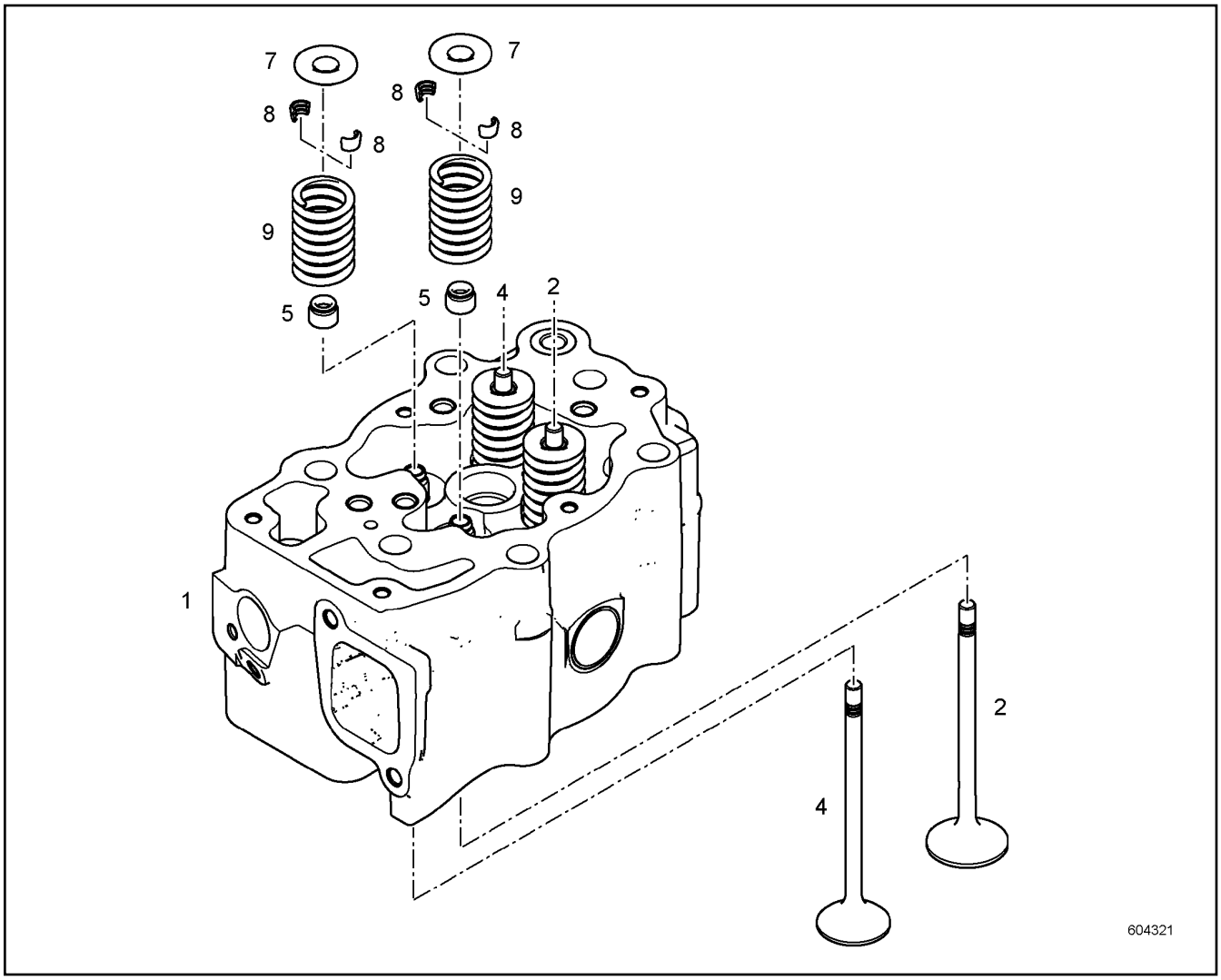

Pos.	Item	Quantity	Description	Bezeichnung	Serie	K
1	10137285	1	CYLINDER HEAD ⇨ ❑ 193	ZYLINDERKOPF		
2	10136752	2	INLET VALVE	EINLASSVENTIL		
4	10136751	2	OUTLET VALVE	AUSLASSVENTIL		
5	10120334	4	VALVE STEM SEAL RING	VENTILSCHAFTDICHTRING		
7	9074480	4	SPRING CUP ABOVE	FEDERTELLER OBEN		
8	10004331	8	VALVE COLLET	VENTILKEGELSTUECK		
9	9074481	4	PRESSURE SPRING	DRUCKFEDER		

OHNE BILD
WITHOUT ILLUSTRATION
SANS PLANCHE
SIN FIG.
SEM ILUSTRAÇÃO
БЕЗ ИЗОБРАЖЕНИЯ

600000

Pos.	Item	Quantity	Description	Bezeichnung	Serie	K
1	10131623	1	CYLINDER HEAD	ZYLINDERKOPF		
2	10123532	1	SLEEVE	HUELSE		
3	10342770	1	O-RING	O-RING		
4	10139064	4	VALVE STEM GUIDE	VENTILFUEHRUNG		
6	9073725	2	INLET VALVE SEAT INSERT	VENTILSITZRING EINLASS		
7	10128680	2	EXHAUST VALVE SEAT INSERT	VENTILSITZRING AUSLASS		
9	9079078	1	THREADED BUSHING	GEWINDEBUCHSE		
10	4980363	3	END COVER	VERSCHLUSSDECKEL		
104	8655023	1	GLUE	KLEBSTOFF		

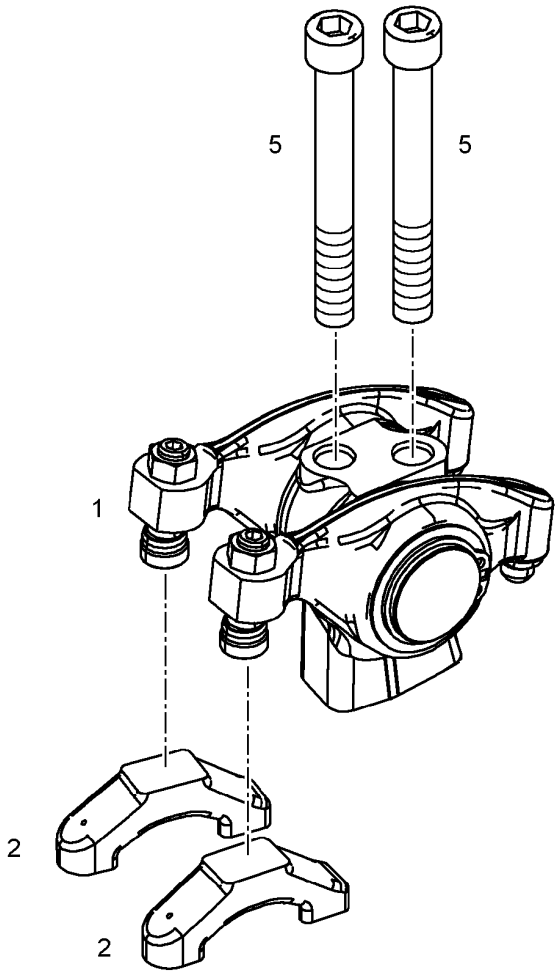

Pos.	Item	Quantity	Description	Bezeichnung	Serie	K
1	10142641	1	ROCKER ARM BRACKET PRE-ASS.	KIPPHEBELBOCK VORM.		
2	10119695	2	VALVE BRIDGE	VENTILBRUECKE		
5	4600385	2	SOCKET HEAD SCREW ISO 4762 M12X100 10.	ZYLINDERSCHRAUBE		

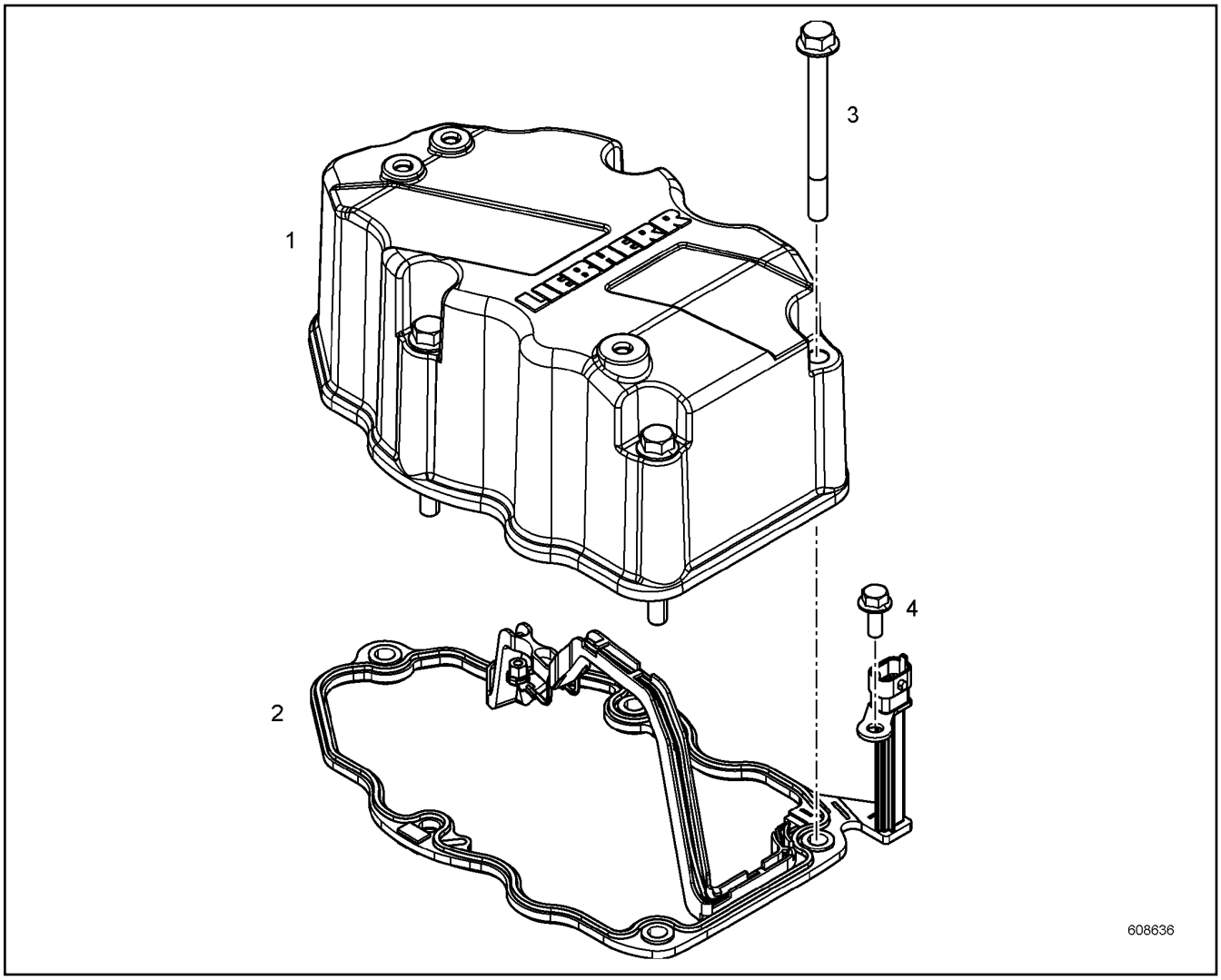

Pos.	Item	Quantity	Description	Bezeichnung	Serie	K
1	10134750	1	CYLINDER HEAD COVER	ZYLINDERKOPFDECKEL		
2	10126510	1	SEAL	DICHTUNG		
3	10100303	5	HEX SCREW EN 1665 M8X90 8.8	SECHSKANTSCHRAUBE		
4	407350208	1	HEX SCREW EN 1665 M6X16 8.8	SECHSKANTSCHRAUBE		

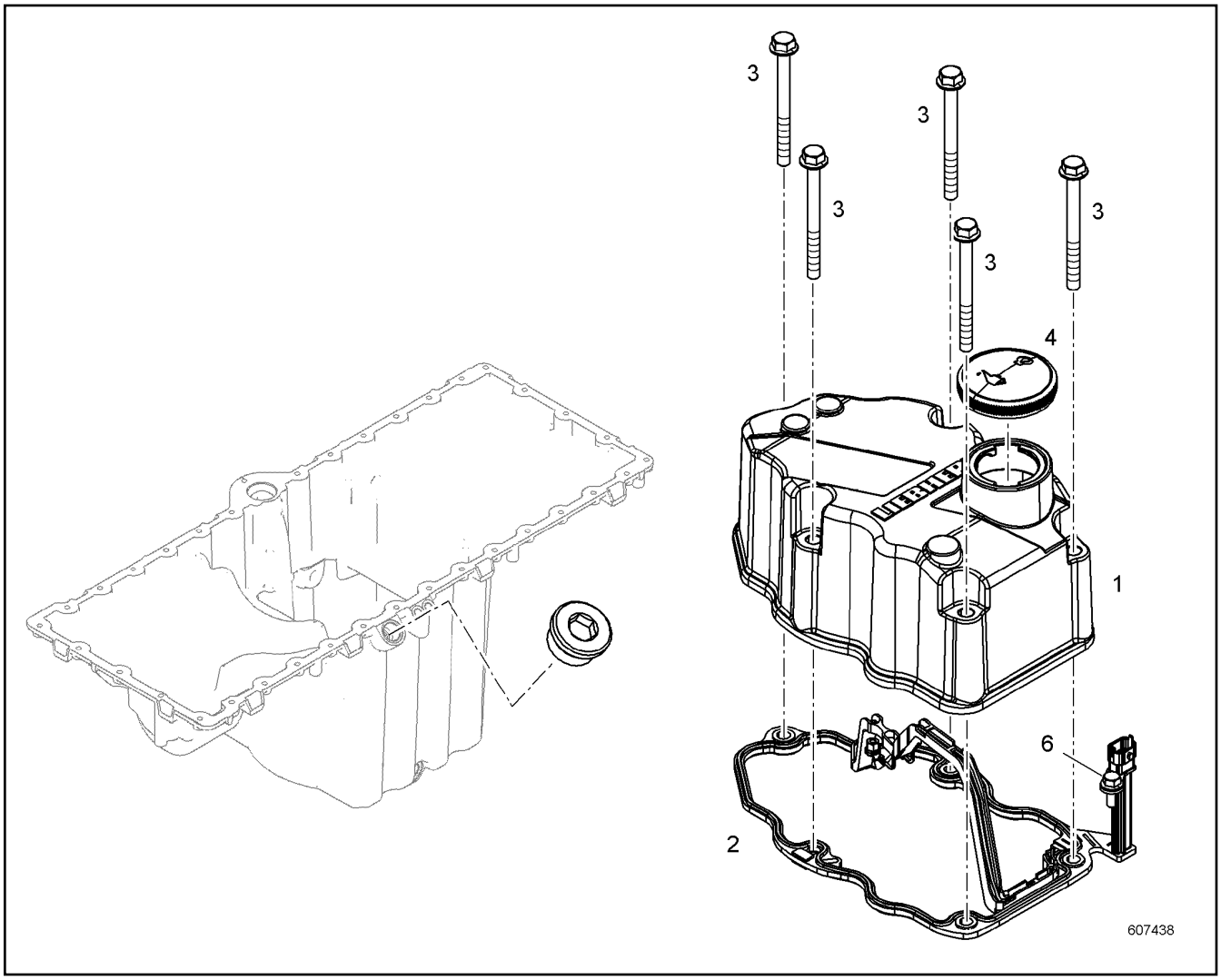

Pos.	Item	Quantity	Description	Bezeichnung	Serie	K
1	10134698	1	CYLINDER HEAD COVER	ZYLINDERKOPFDECKEL		
2	10126510	1	SEAL	DICHTUNG		
3	10100303	5	HEX SCREW EN 1665 M8X90 8.8	SECHSKANTSCHRAUBE		
4	9144757	1	END COVER ⇨ ❑ 197	VERSCHLUSSDECKEL		
6	407350208	1	HEX SCREW EN 1665 M6X16 8.8	SECHSKANTSCHRAUBE		

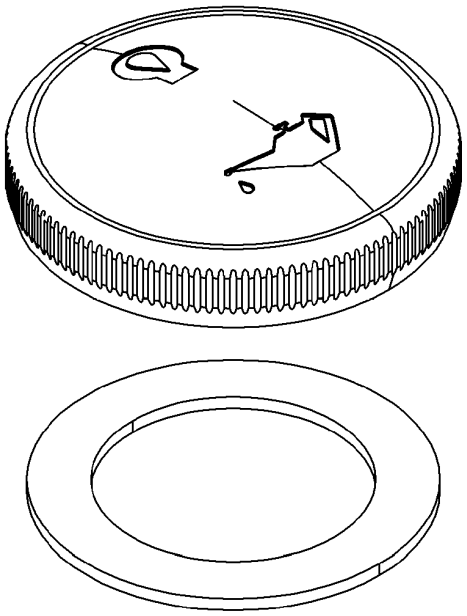

Pos.	Item	Quantity	Description	Bezeichnung	Serie	K
3	9144762	1	SEAL	DICHTUNG		

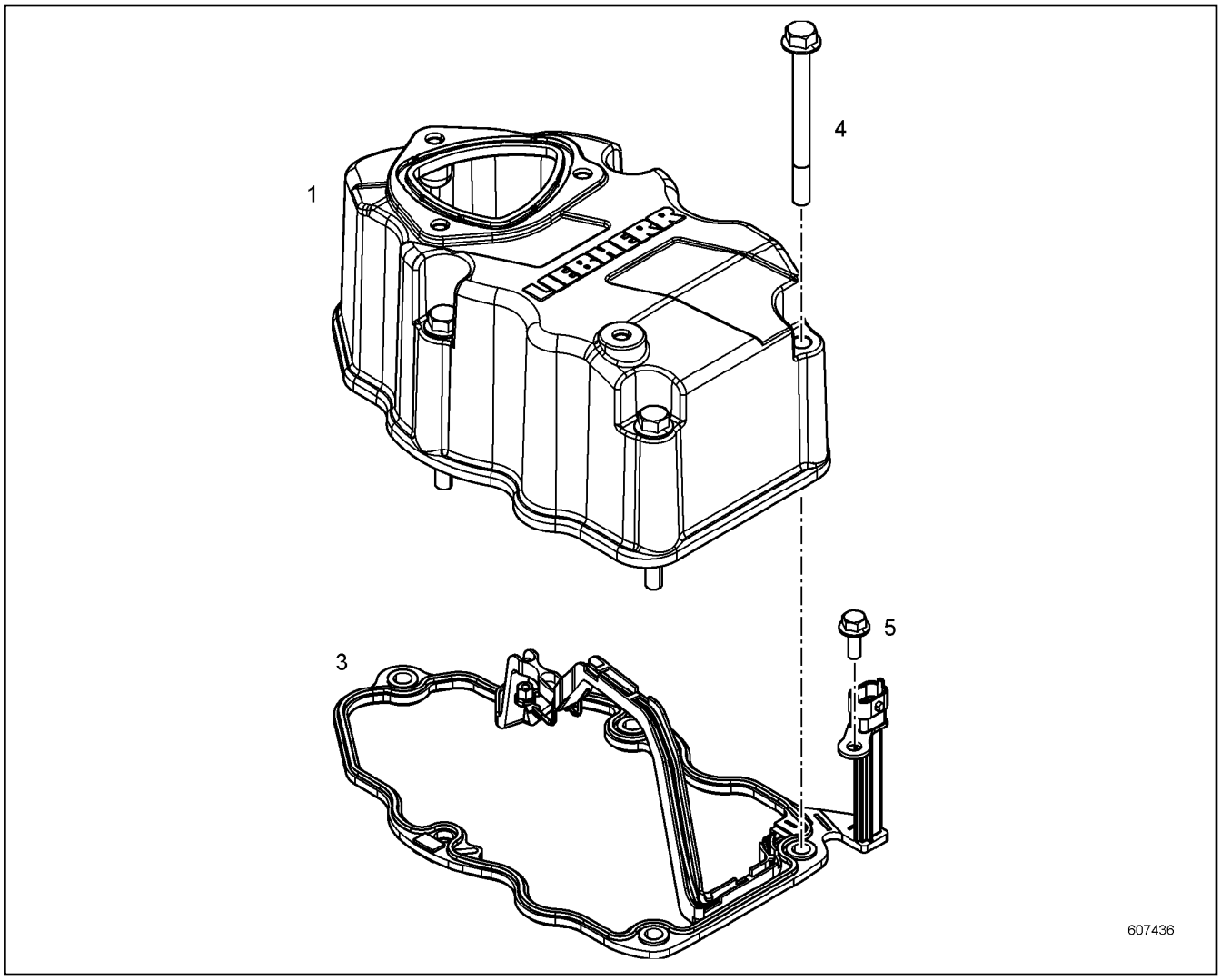

Pos.	Item	Quantity	Description	Bezeichnung	Serie	K
1	10134695	1	CYLINDER HEAD COVER	ZYLINDERKOPFDECKEL		
3	10126510	1	SEAL	DICHTUNG		
4	10100303	5	HEX SCREW EN 1665 M8X90 8.8	SECHSKANTSCHRAUBE		
5	407350208	1	HEX SCREW EN 1665 M6X16 8.8	SECHSKANTSCHRAUBE		

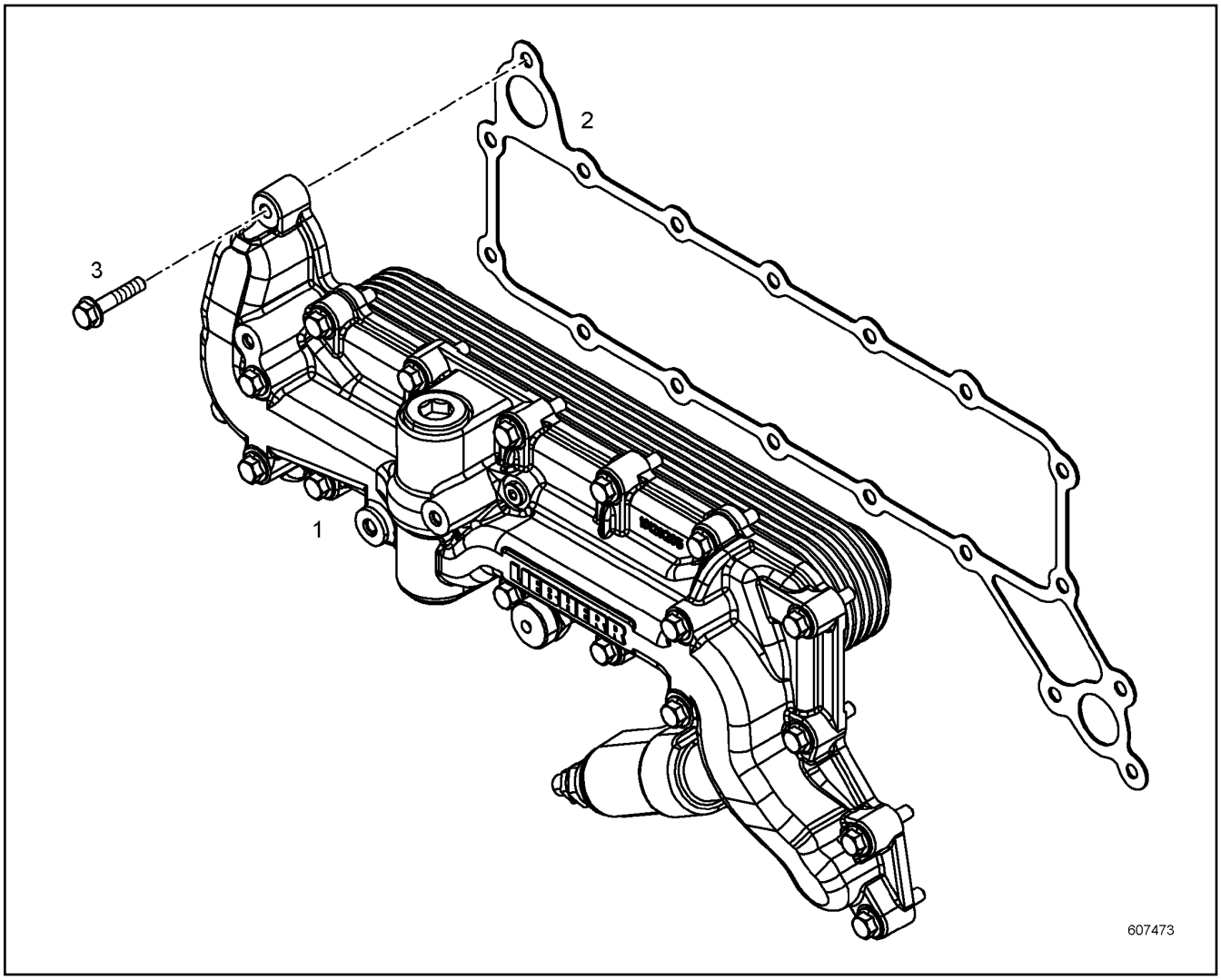

Pos.	Item	Quantity	Description	Bezeichnung	Serie	K
1	10129480	1	OIL COOLER, PRE-ASSEMBLED ⇨ ❑ 200	OELKUEHLER VORM.		
2	10117891	1	SEAL	DICHTUNG		
3	10218013	18	HEX SCREW DIN 6921 M8X55 8.8	SECHSKANTSCHRAUBE		

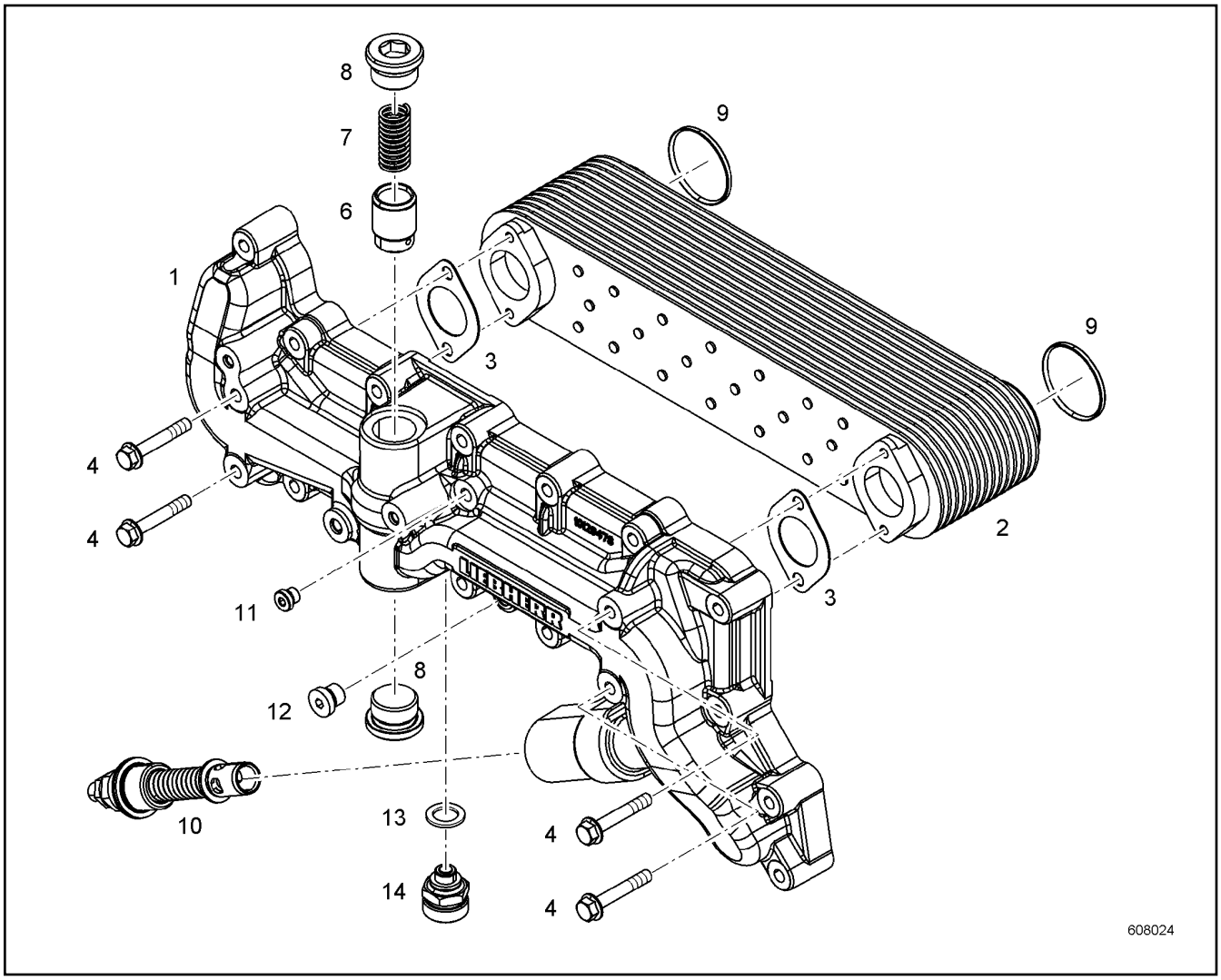

Pos.	Item	Quantity	Description	Bezeichnung	Serie	K
1	10129479	1	OIL COOLER HOUSING	OELKUEHLERGEHAEUSE		
2	5700088	1	OIL COOLER	OELKUEHLER		
3	10119923	2	SEAL	DICHTUNG		
4	10005073	4	HEX SCREW EN 1665 M8X50 8.8	SECHSKANTSCHRAUBE		
6	9886591	1	PISTON	KOLBEN		
7	9886756	1	PRESSURE SPRING	DRUCKFEDER		
8	7382204	2	SCREW PLUG	VERSCHLUSSSCHRAUBE		
9	7380955	2	O-RING	O-RING		
10	10129499	1	FINAL CONTROL VALVE ⇨ ❑ 201	ENDREGELVENTIL		
11	7381638	1	SCREW PLUG	VERSCHLUSSSCHRAUBE		
12	7380566	1	SCREW PLUG	VERSCHLUSSSCHRAUBE		
13	7381225	1	SEALING RING	DICHTRING		
14	10011832	1	VALVE	VENTIL		

OHNE BILD
WITHOUT ILLUSTRATION
SANS PLANCHE
SIN FIG.
SEM ILUSTRAÇÃO
БЕЗ ИЗОБРАЖЕНИЯ

600000

Pos.	Item	Quantity	Description	Bezeichnung	Serie	K
1	10129500	1	PISTON	KOLBEN		
2	10134944	1	SCREW PLUG 9SMNPB28K	VERSCHLUSSSCHRAUBE		
3	10113731	1	SEALING RING	DICHTRING		
4	10129505	1	ADJUSTING SCREW M12X46 8.8	EINSTELLSCHRAUBE		
5	7381226	1	SEALING NUT BN 1226 M12	DICHTMUTTER		
6	10129501	1	PRESSURE SPRING	DRUCKFEDER		

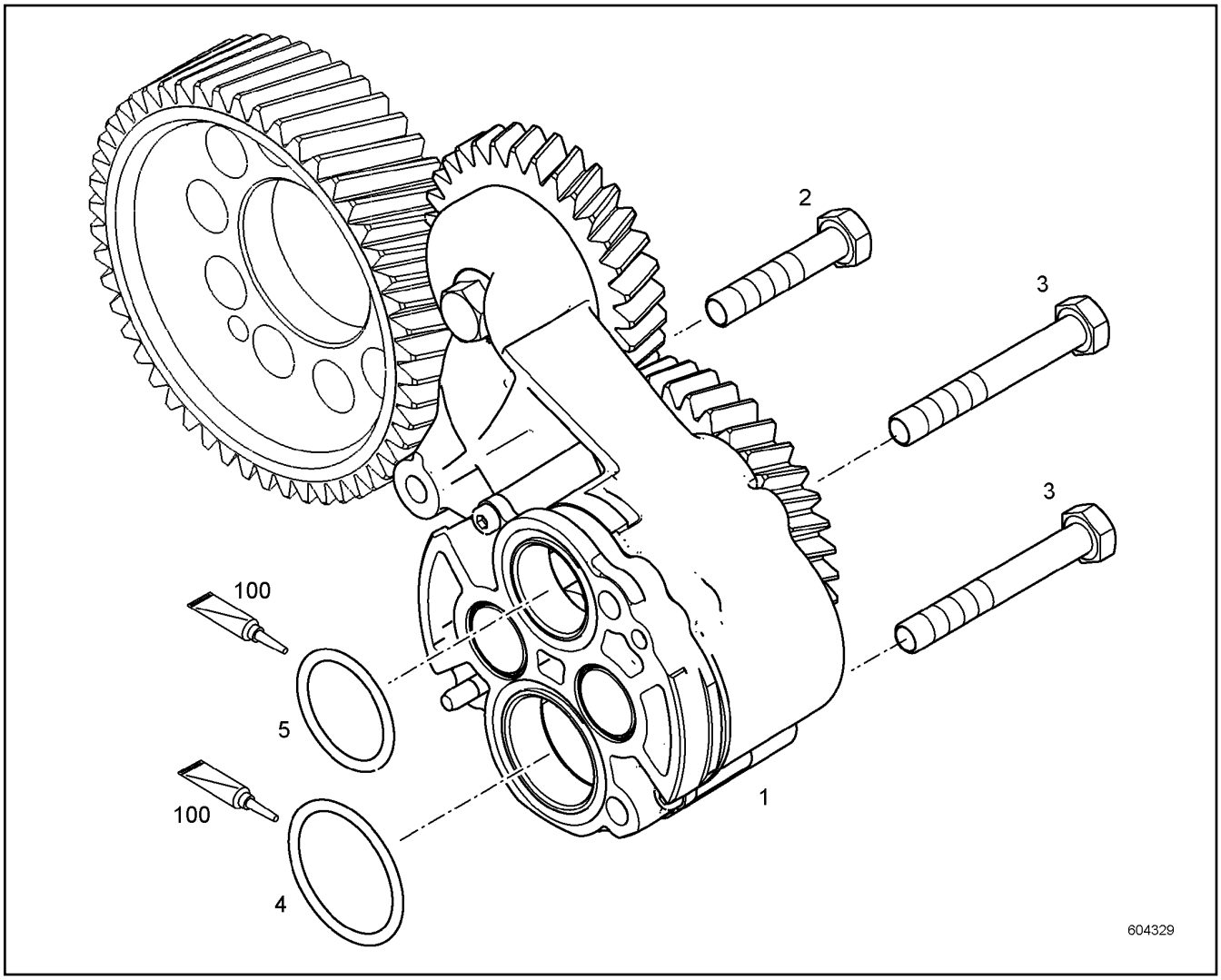

Pos.	Item	Quantity	Description	Bezeichnung	Serie	K
1	10138565	1	LUBRICATING OIL PUMP	SCHMIEROELPUMPE		
2	10005713	1	HEX SCREW DIN 6921 M8X45 8.8	SECHSKANTSCHRAUBE		
3	11066361	2	HEX SCREW DIN 6921 M8X90 8.8	SECHSKANTSCHRAUBE		
4	11066168	1	O-RING	O-RING		
5	7382059	1	O-RING	O-RING		
100	10282622	1	GREASE	FETT		

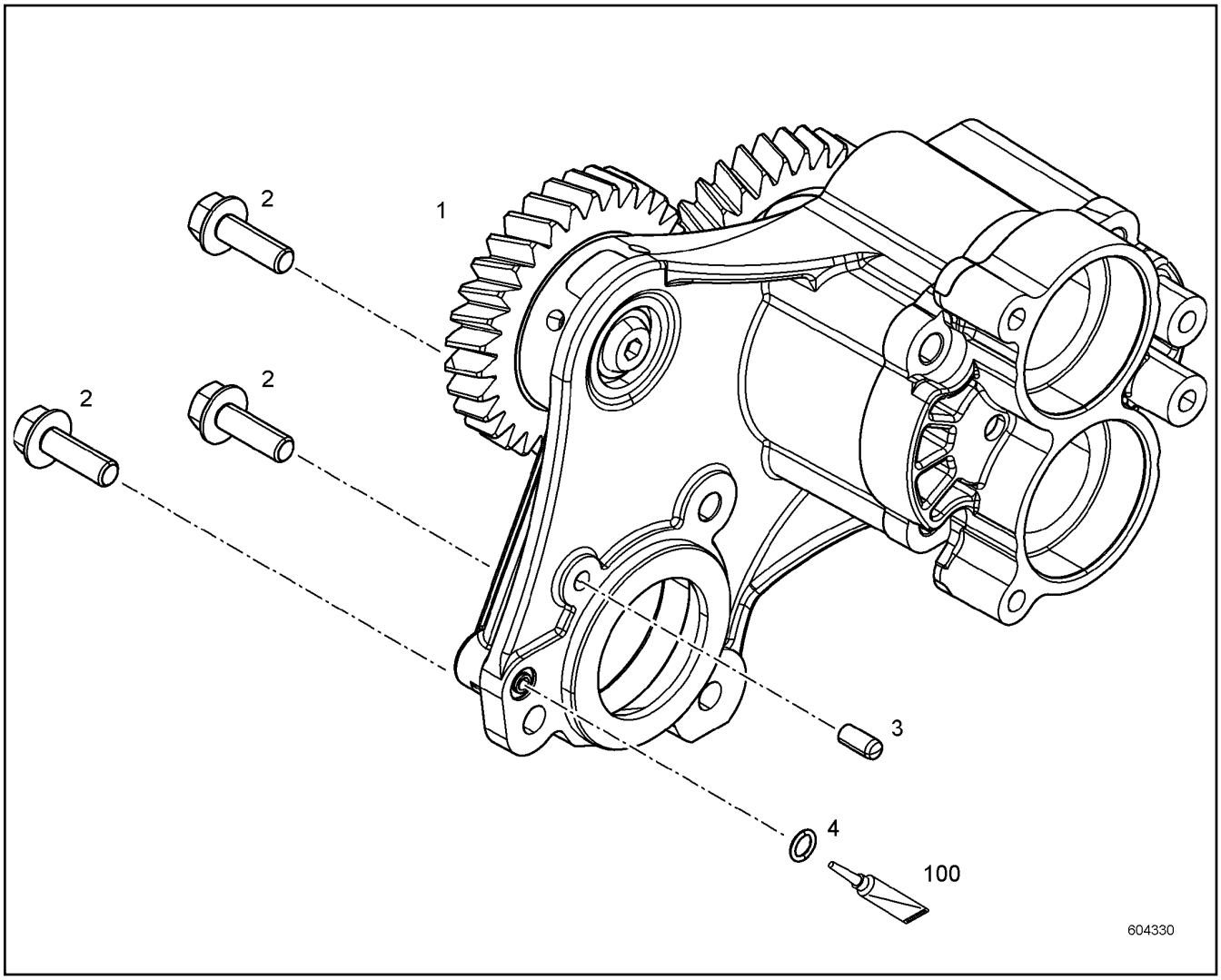

Pos.	Item	Quantity	Description	Bezeichnung	Serie	K
1	10133823	1	SUCTION PUMP PRE-ASS. ⇨ ❑ 204	ABSAUGPUMPE VORM.		
2	11004752	3	HEX SCREW DIN 6921 8.8	SECHSKANTSCHRAUBE		
3	4980000	1	PARALLEL PIN ISO 8734 6M6X14 ST	ZYLINDERSTIFT		
4	7381685	1	O-RING	O-RING		
100	10282622	1	GREASE	FETT		

OHNE BILD
WITHOUT ILLUSTRATION
SANS PLANCHE
SIN FIG.
SEM ILUSTRAÇÃO
БЕЗ ИЗОБРАЖЕНИЯ

600000

Pos.	Item	Quantity	Description	Bezeichnung	Serie	K
1	10132069	1	PUMP HOUSING	PUMPENGEHAEUSE		
2	10121971	4	BEARING BUSHING	LAGERBUCHSE		
3	10132074	1	CONNECTION FLANGE	ANSCHLUSSFLANSCH		
4	10121983	1	GEAR WHEEL	ZAHNRAD		
5	10121982	1	GEAR WHEEL	ZAHNRAD		
6	10133684	1	GEAR WHEEL	ZAHNRAD		
7	10120188	1	HUB	NABE		
8	4901104	1	PARALLEL PIN ISO 8734 4M6X10	ZYLINDERSTIFT		
9	10011777	2	PARALLEL PIN 8M6X24 ST 2 K 50	ZYLINDERSTIFT		
14	9072633	1	INTERMEDIATE GEAR PRE-ASS.	ZWISCHENRAD VORM.		
15	4980805	1	HEX NUT EN 1661 M10 8	SECHSKANTMUTTER		
16	7380779	2	SEALING PLUG	DICHTSTOPFEN		
17	10112497	1	HEX SCREW DIN 6921 M10X40 8.8	SECHSKANTSCHRAUBE		

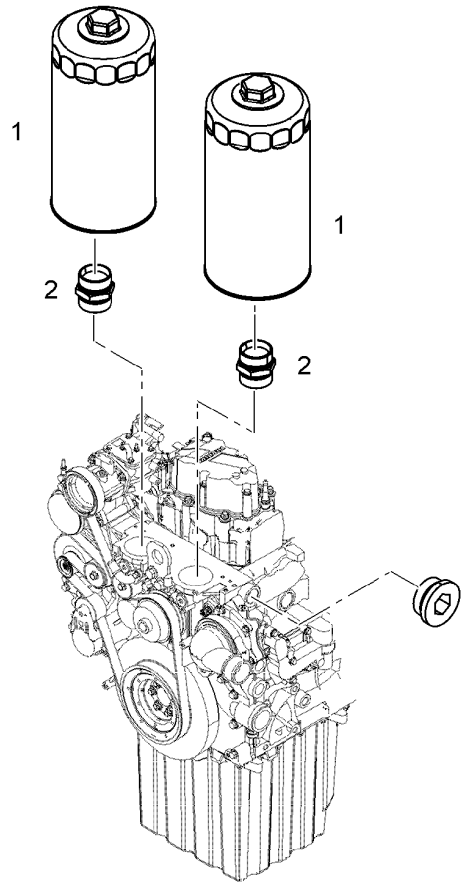

Pos.	Item	Quantity	Description	Bezeichnung	Serie	K
1	10297295	2	EASY-CHANGE FILTER	WECHSELFILTER		
2	9273271	2	FITTINGS	STUTZEN		

OHNE BILD
WITHOUT ILLUSTRATION
SANS PLANCHE
SIN FIG.
SEM ILUSTRAÇÃO
БЕЗ ИЗОБРАЖЕНИЯ

600000

Pos.	Item	Quantity	Description	Bezeichnung	Serie	K
2	404206614	1	SOCKET HEAD SCREW ISO 4762 M8X30 A4-7	ZYLINDERSCHRAUBE		
3	4001622	4	SOCKET HEAD SCREW ISO 4762 M10X55 10.9	ZYLINDERSCHRAUBE		

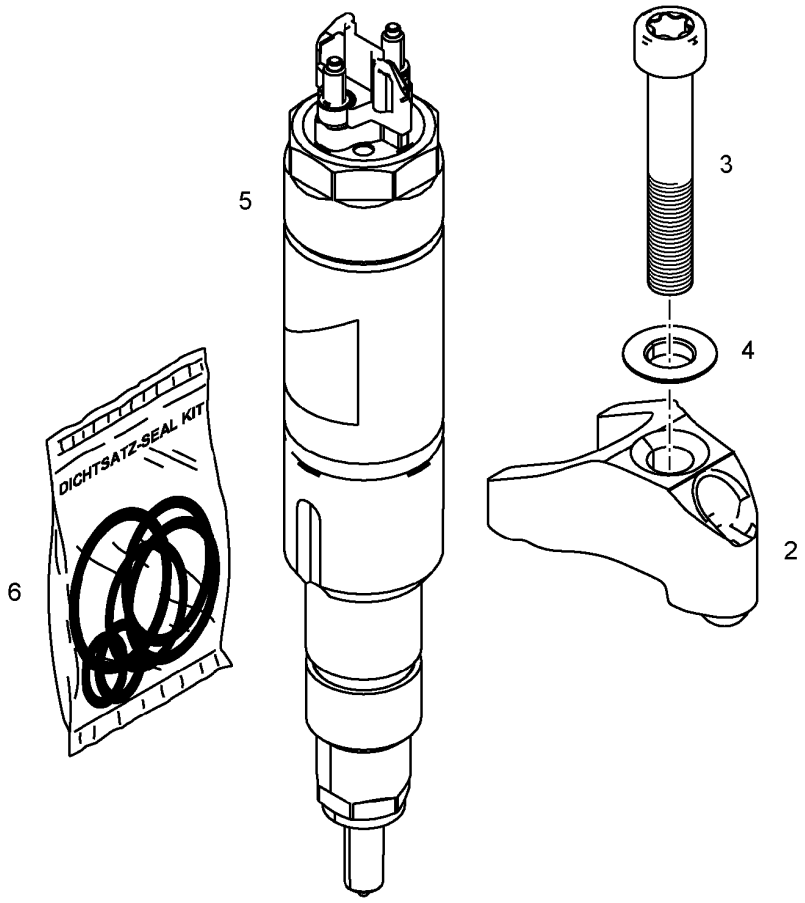

Pos.	Item	Quantity	Description	Bezeichnung	Serie	K
2	10142030	1	JAW	PRATZE		
3	11082116	1	SOCKET HEAD SCREW ISO 14580 M8X50 10.9	ZYLINDERSCHRAUBE		
4	10036473	1	SPHERICAL WASHER DIN 6319 8.4X17X3.2 ST	KUGELSCHEIBE		
5	10152874	1	RK INJECTOR	RS INJEKTOR		
6	10141215	1	SEAL KIT INJECTOR	DS INJEKTOR		

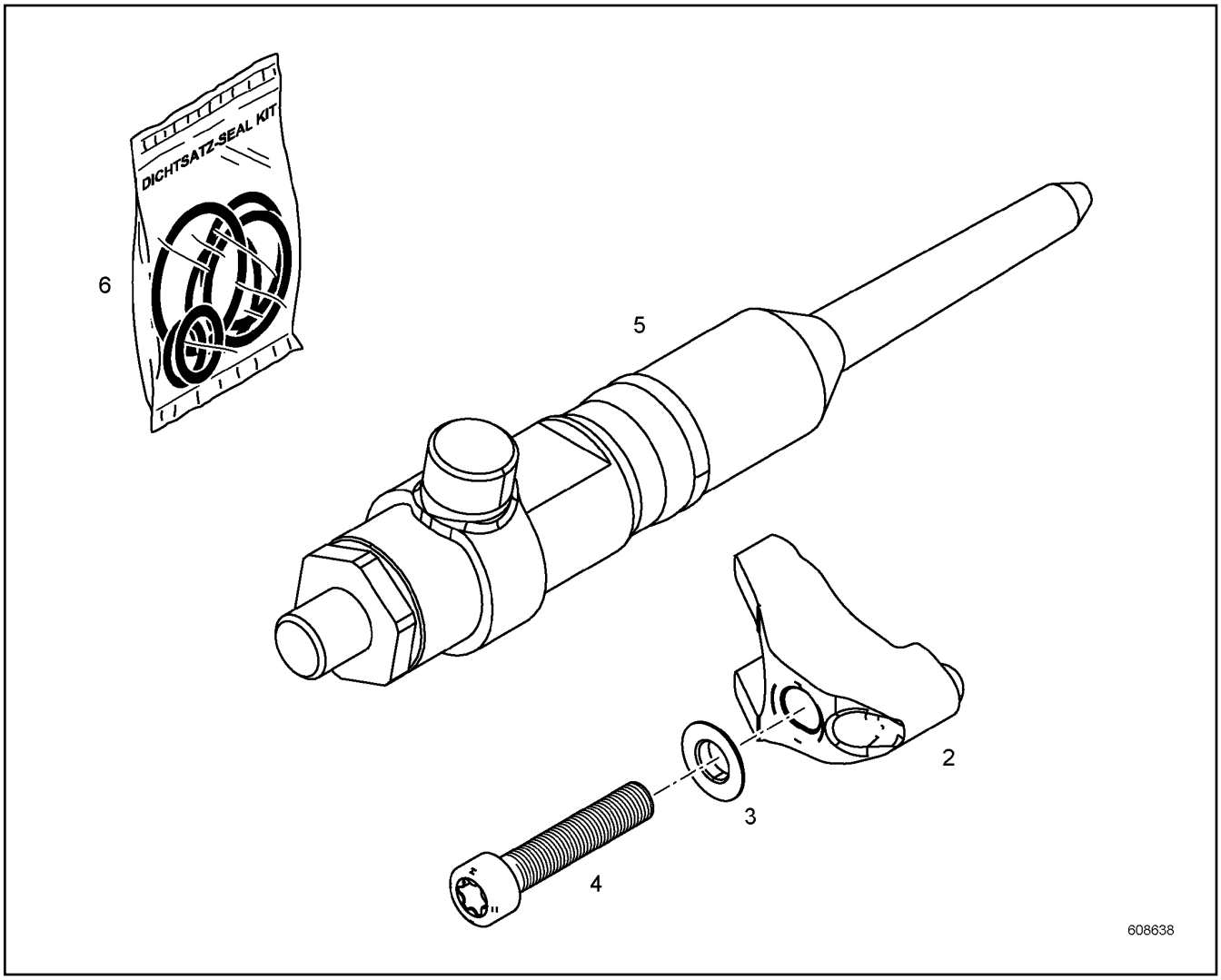

Pos.	Item	Quantity	Description	Bezeichnung	Serie	K
2	10150144	1	JAW	PRATZE		
3	11622278	1	SPHERICAL WASHER DIN 6319	KUGELSCHEIBE		
4	11600879	1	SOCKET HEAD SCREW ISO 14579 10.9	ZYLINDERSCHRAUBE		
5	10141140	1	RK PRESSURE ADAPTER ⇨ ❑ 209	RS DRUCKROHRSTUTZEN		
6	10141216	1	SEAL KIT PRESSURE ADAPTER ⇨ ❑ 211	DS DRUCKROHRSTUTZEN		

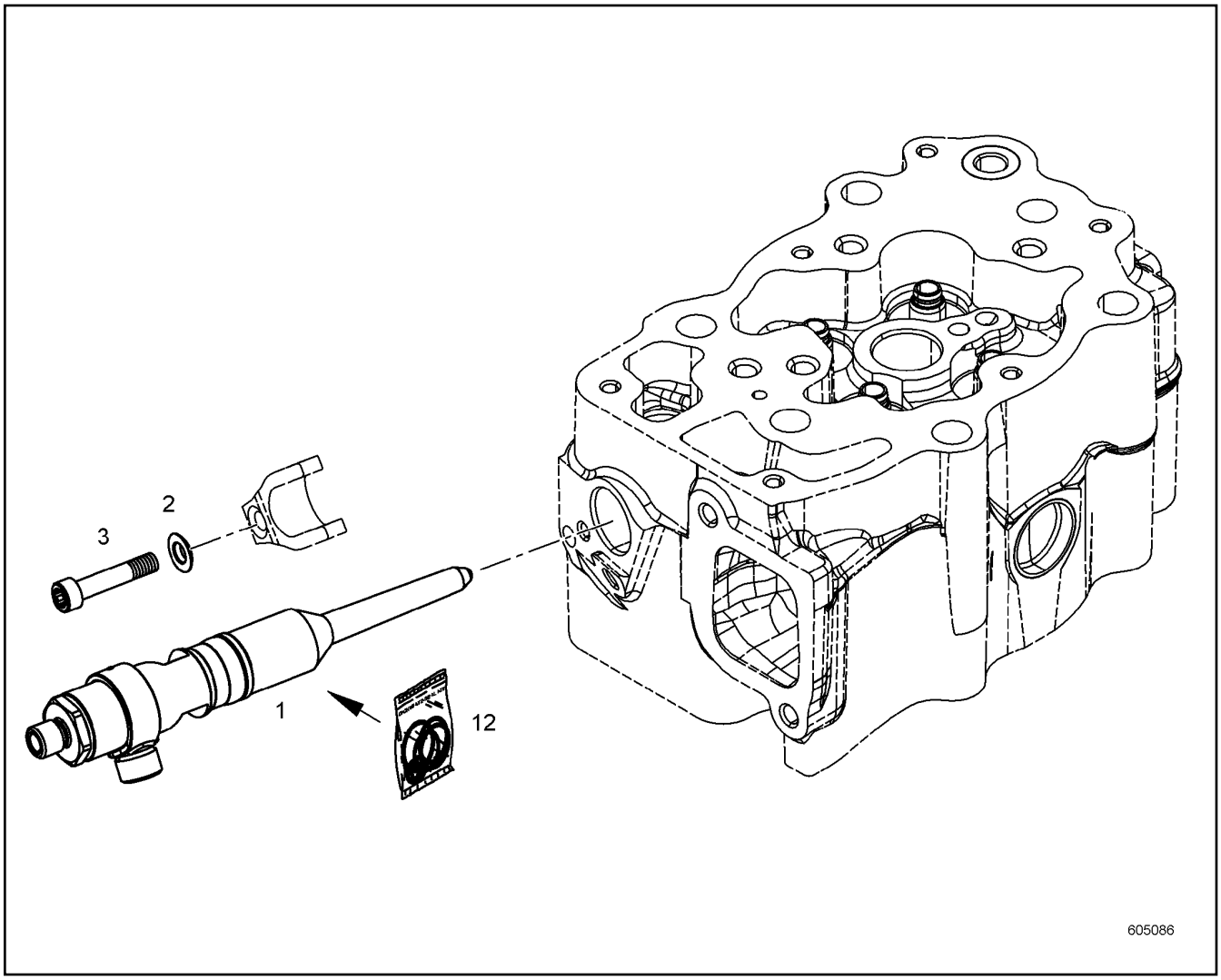

Pos.	Item	Quantity	Description	Bezeichnung	Serie	K
1	10135080	1	PRESSURE ADAPTER ⇨ ❑ 210	DRUCKROHRSTUTZEN		
2	10036473	1	SPHERICAL WASHER DIN 6319 8.4X17X3.2 ST	KUGELSCHEIBE		
3	11600879	1	SOCKET HEAD SCREW ISO 14579 10.9	ZYLINDERSCHRAUBE		
12	10141216	1	SEAL KIT PRESSURE ADAPTER ⇨ ❑ 211	DS DRUCKROHRSTUTZEN		

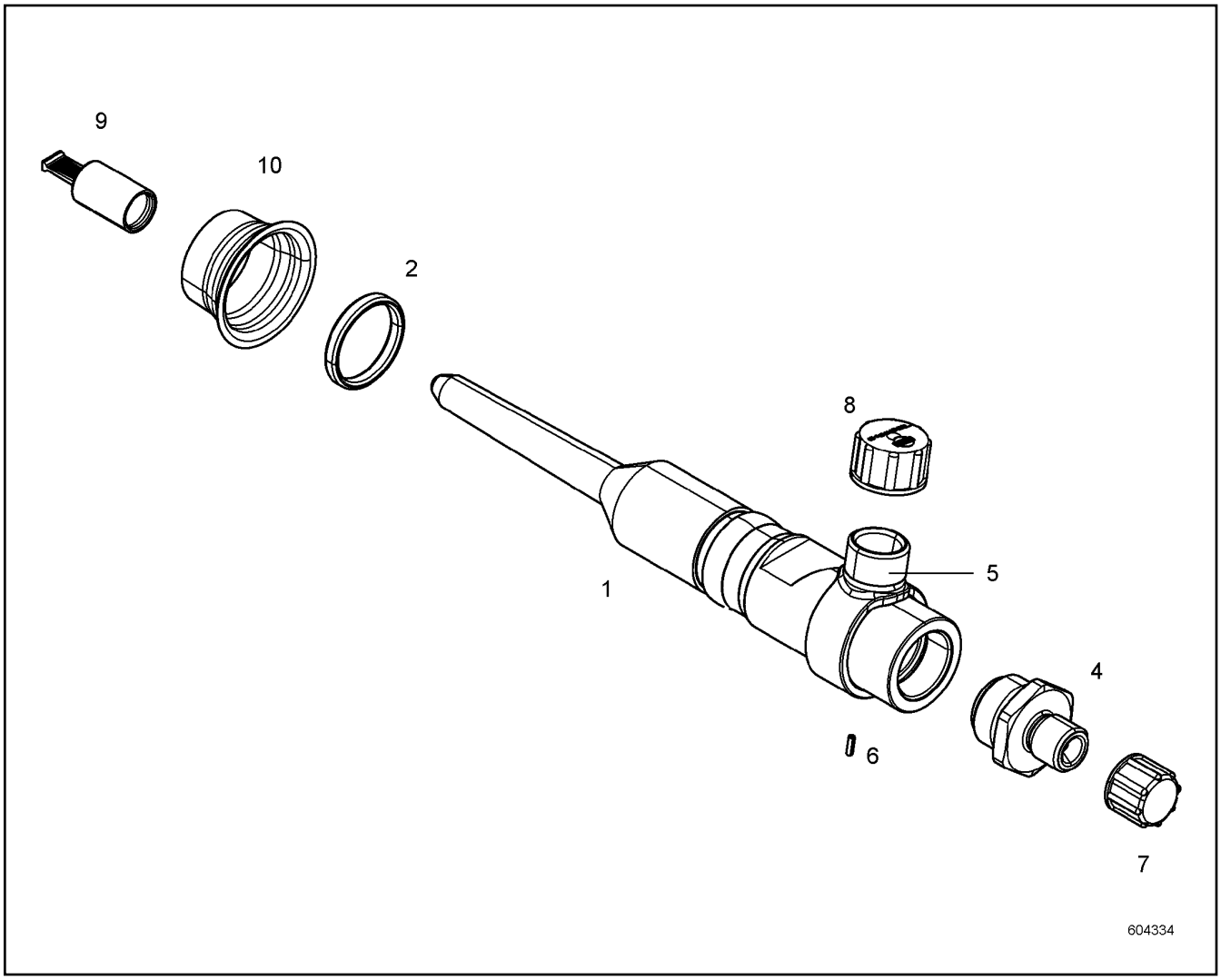

Pos.	Item	Quantity	Description	Bezeichnung	Serie	K
1	10131081	1	PRESSURE ADAPTER	DRUCKROHRSTUTZEN		
2	10130757	1	O-RING	O-RING		
4	10128100	1	CONNECTION STUB	ANSCHLUSSSTUTZEN		
5	10129179	1	CLAMP	SCHELLE		
6	11001743	1	DOWEL PIN ISO 8752 2X6 ST	SPANNSTIFT		
7	10129382	1	COVER LID	ABDECKKAPPE		
8	10129383	1	COVER LID	ABDECKKAPPE		
9	11694640	1	COVER LID	ABDECKKAPPE		
10	10129385	1	COVER LID	ABDECKKAPPE		

OHNE BILD
WITHOUT ILLUSTRATION
SANS PLANCHE
SIN FIG.
SEM ILUSTRAÇÃO
БЕЗ ИЗОБРАЖЕНИЯ

600000

Pos.	Item	Quantity	Description	Bezeichnung	Serie	K
1	10130757	1	O-RING	O-RING		

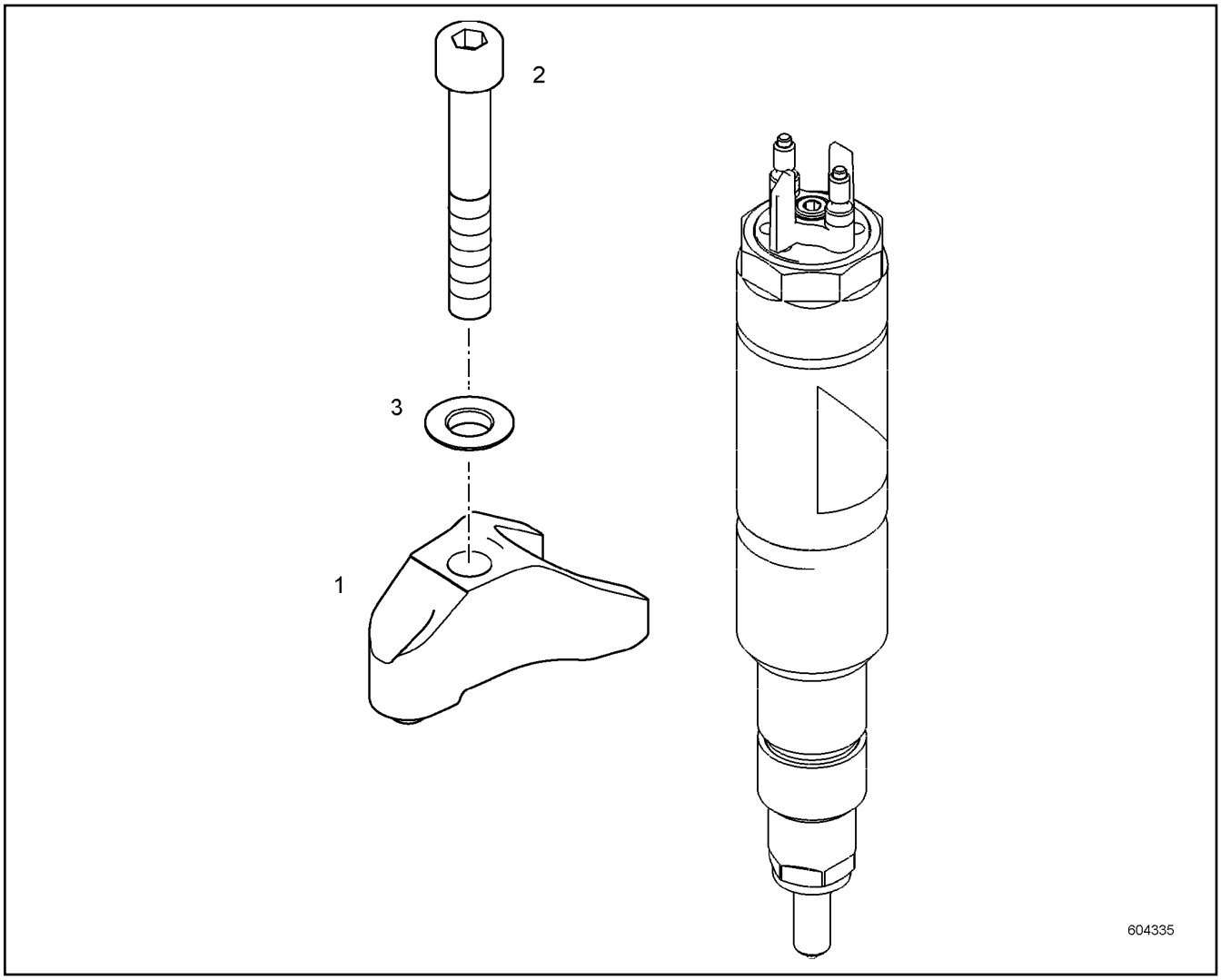

Pos.	Item	Quantity	Description	Bezeichnung	Serie	K
1	10142030	1	JAW	PRATZE		
2	11082116	1	SOCKET HEAD SCREW ISO 14580 M8X50 10.9	ZYLINDERSCHRAUBE		
3	10036473	1	SPHERICAL WASHER DIN 6319 8.4X17X3.2 ST	KUGELSCHEIBE		

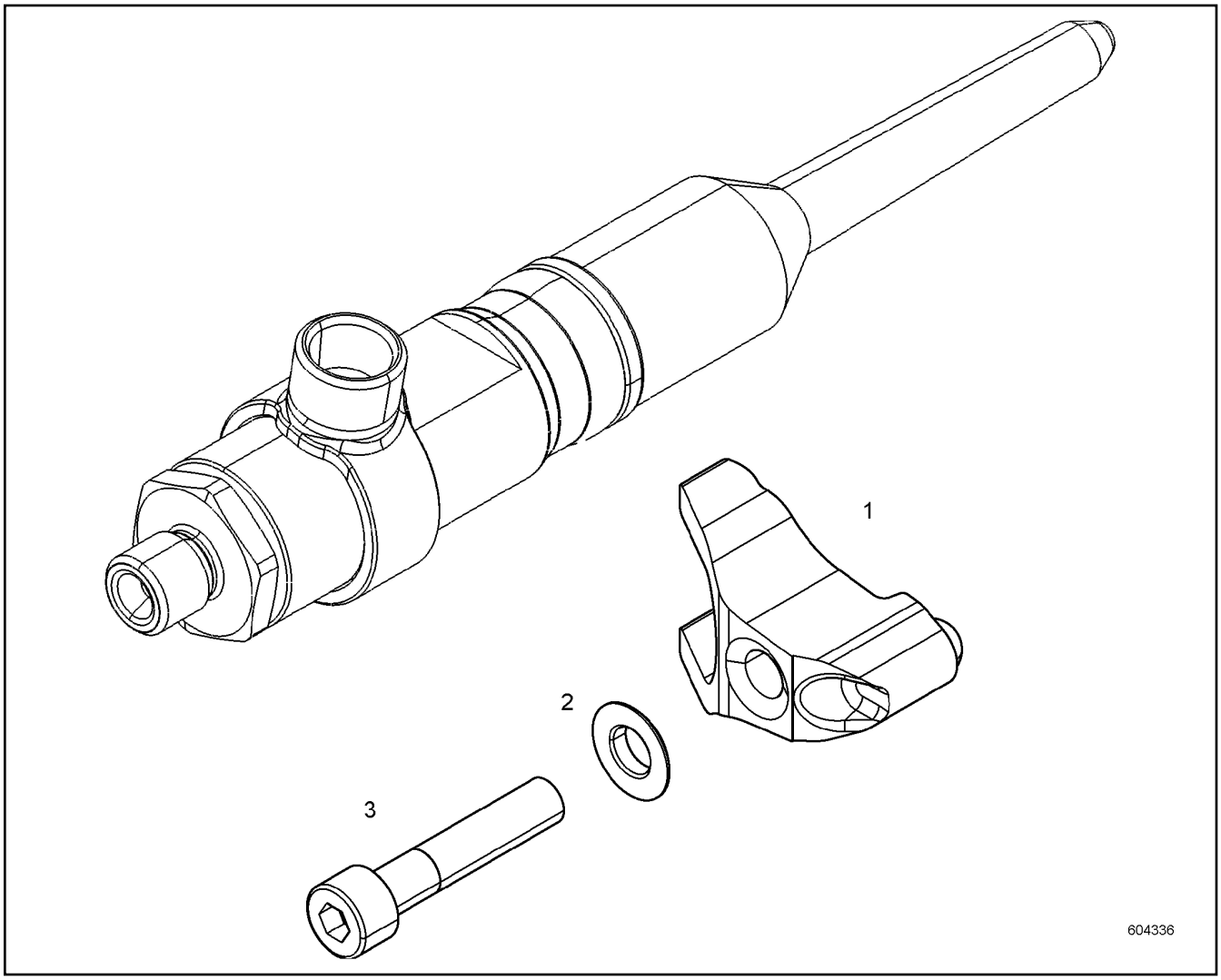

Pos.	Item	Quantity	Description	Bezeichnung	Serie	K
1	10146415	1	JAW	PRATZE		
2	11622278	1	SPHERICAL WASHER DIN 6319	KUGELSCHEIBE		
3	11600879	1	SOCKET HEAD SCREW ISO 14579 10.9	ZYLINDERSCHRAUBE		

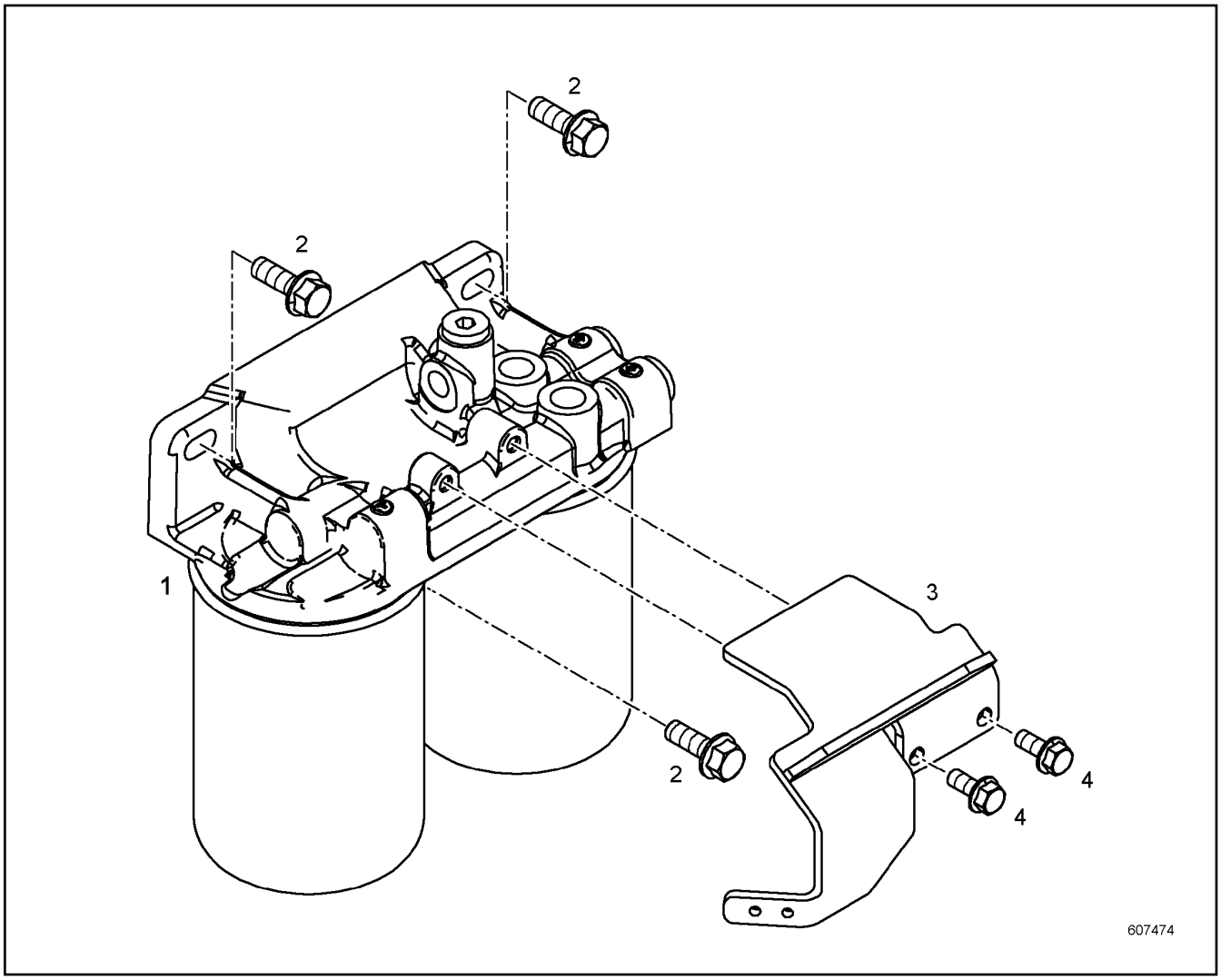

Pos.	Item	Quantity	Description	Bezeichnung	Serie	K
1	10146753	1	FUEL FINE FILTER ⇨ ❑ 215	KRAFTSTOFFFEINFILTER		
2	10333464	3	HEX SCREW DIN 6921 M10X35 8.8	SECHSKANTSCHRAUBE		
3	10138079	1	HOLDER	HALTER		
4	10016906	2	HEX SCREW EN 1665 M8X20 8.8	SECHSKANTSCHRAUBE		

OHNE BILD
WITHOUT ILLUSTRATION
SANS PLANCHE
SIN FIG.
SEM ILUSTRAÇÃO
БЕЗ ИЗОБРАЖЕНИЯ

600000

Pos.	Item	Quantity	Description	Bezeichnung	Serie	K
1	10152786	1	FILTER BRACKET	FILTERKONSOLE		
2	10429946	2	FUEL FINE FILTER	KRAFTSTOFFFEINFILTER		
3	7380688	2	SCREW PLUG	VERSCHLUSSSCHRAUBE		
4	10116078	1	SCREW PLUG	VERSCHLUSSSCHRAUBE		

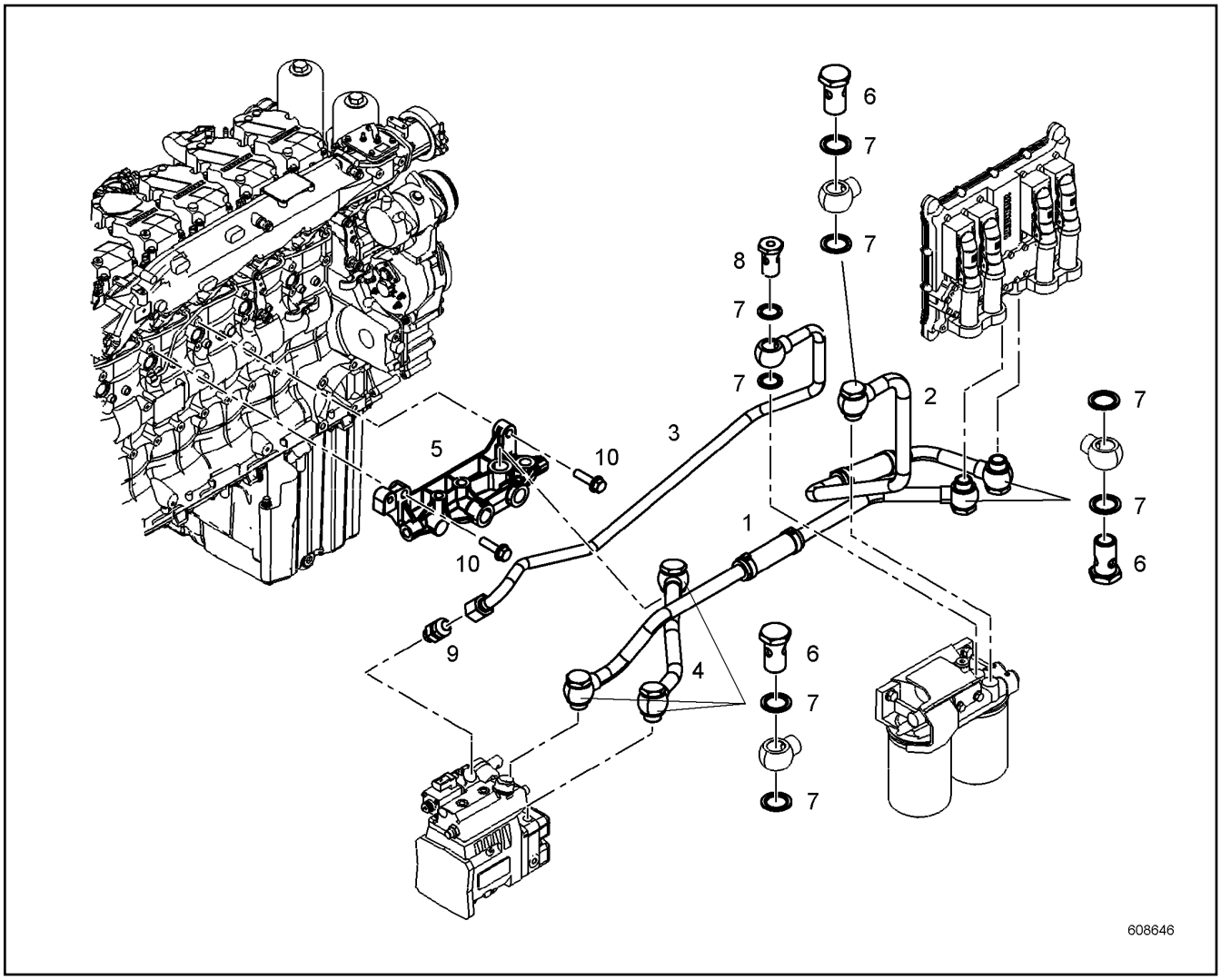

Pos.	Item	Quantity	Description	Bezeichnung	Serie	K
1	10141988	1	PIPELINE	ROHRLEITUNG		
2	10141989	1	PIPELINE	ROHRLEITUNG		
3	10142080	1	PIPELINE	ROHRLEITUNG		
4	10141986	1	PIPELINE	ROHRLEITUNG		
5	10151825	1	DISTRIBUTOR BLOCK	VERTEILERBLOCK		
6	4981226	6	HOLLOW SCREW DIN 7643 15	HOHLSCHRAUBE		
7	10011868	14	SEALING RING	DICHTRING		
8	10129819	1	HOLLOW SCREW DIN 7643 15X3	HOHLSCHRAUBE		
9	11002988	1	FLANGE JOINT	VERSCHRAUBUNG		
10	10007782	2	HEX SCREW EN 1665 M8X30 8.8	SECHSKANTSCHRAUBE		

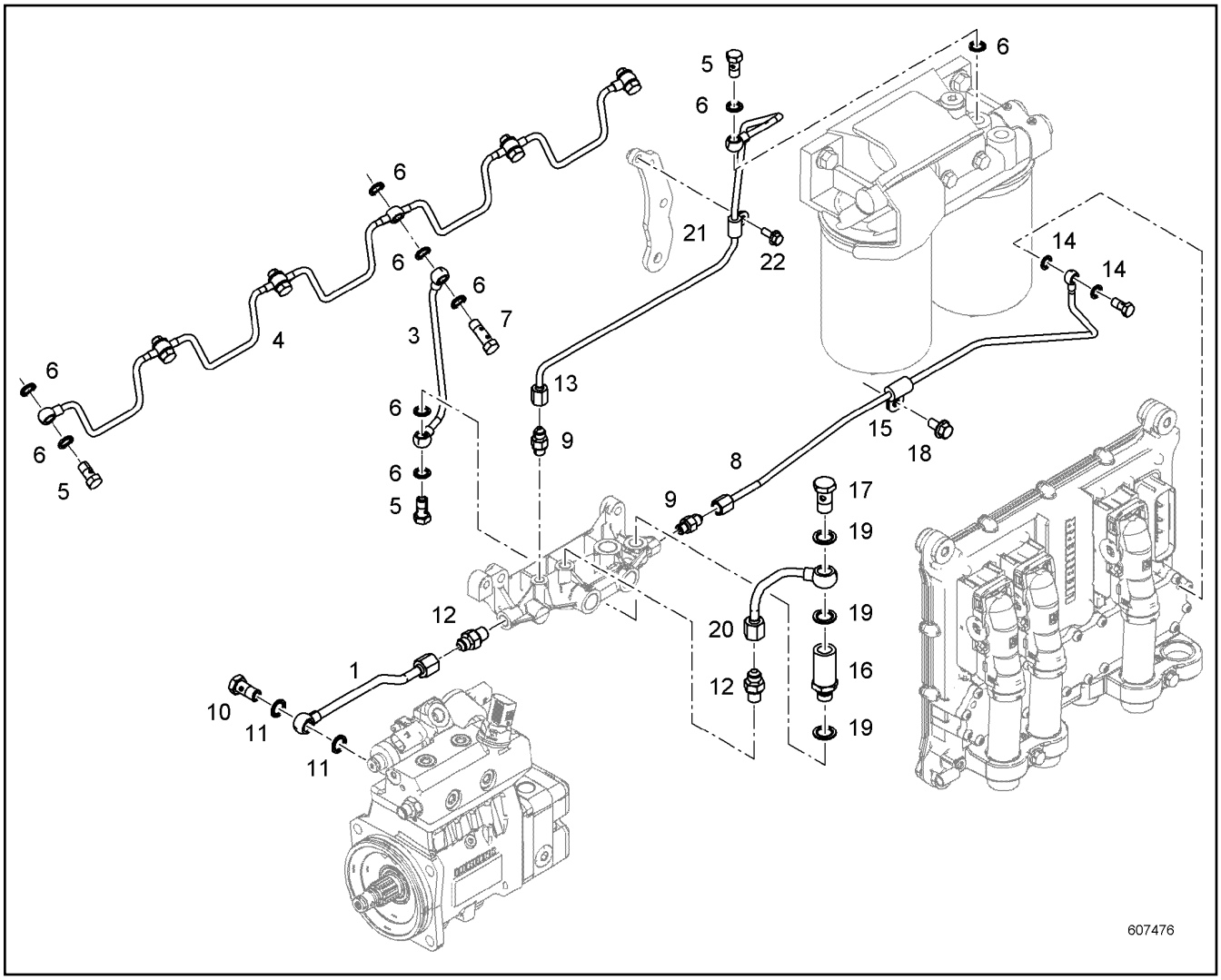

Pos.	Item	Quantity	Description	Bezeichnung	Serie	K
1	10143235	1	PIPELINE	ROHRLEITUNG		
3	10132170	1	PIPELINE	ROHRLEITUNG		
4	9076621	1	FUEL LINE	KRAFTSTOFFLEITUNG		
5	4079160	7	HOLLOW SCREW DIN 7643 M10X1	HOHLSCHRAUBE		
6	10011864	17	SEALING RING	DICHTRING		
7	10014864	1	DOUBLE BANJO BOLT 6X6 9SMNPB28K	DOPPELHOHLSCHRAUBE		
8	10142006	1	PIPELINE	ROHRLEITUNG		
9	10813933	2	FLANGE JOINT	VERSCHRAUBUNG		
10	4980664	1	HOLLOW SCREW DIN 7643 8X3	HOHLSCHRAUBE		
11	10011865	2	SEALING RING	DICHTRING		
12	10813935	2	FLANGE JOINT	VERSCHRAUBUNG		
13	10145889	1	PIPELINE	ROHRLEITUNG		
14	10011871	2	SEALING RING	DICHTRING		
15	7382088	1	CLAMP	SCHELLE		
16	10132935	1	INTERMEDIATE PART	ZWISCHENSTUECK		
17	4079240	1	HOLLOW SCREW DIN 7643 10X3	HOHLSCHRAUBE		
18	10005078	1	HEX SCREW EN 1665 M8X16 8.8	SECHSKANTSCHRAUBE		
19	10011866	3	SEALING RING	DICHTRING		
20	10132180	1	PIPELINE	ROHRLEITUNG		
21	7381292	1	CLAMP	SCHELLE		
22	407350208	1	HEX SCREW EN 1665 M6X16 8.8	SECHSKANTSCHRAUBE		

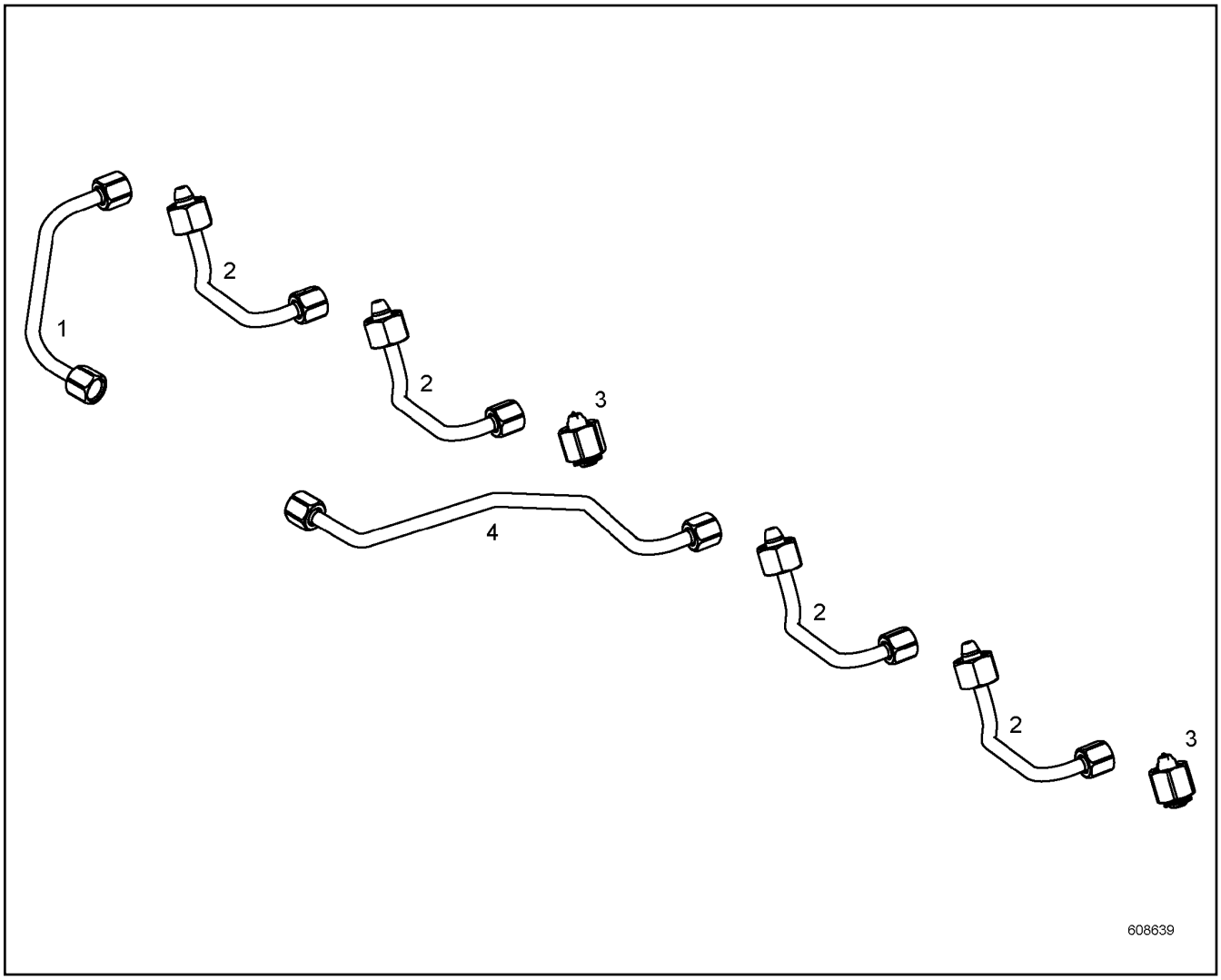

Pos.	Item	Quantity	Description	Bezeichnung	Serie	K
1	10143829	1	INJECTION LINE	EINSPRITZLEITUNG		
2	10143827	4	INJECTION LINE	EINSPRITZLEITUNG		
3	10134753	2	SEALING PLUG	DICHTSTOPFEN		
4	10143831	1	INJECTION LINE	EINSPRITZLEITUNG		

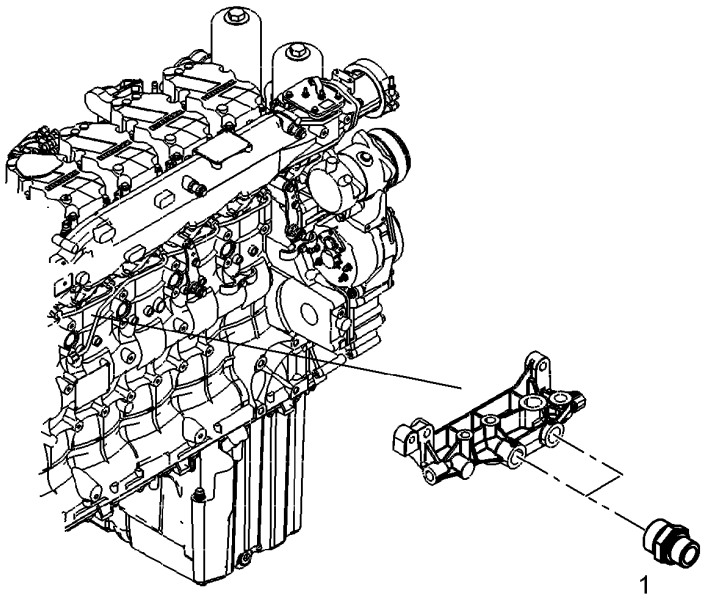

607413

Pos.	Item	Quantity	Description	Bezeichnung	Serie	K
1	4981232	2	FLANGE JOINT	VERSCHRAUBUNG		

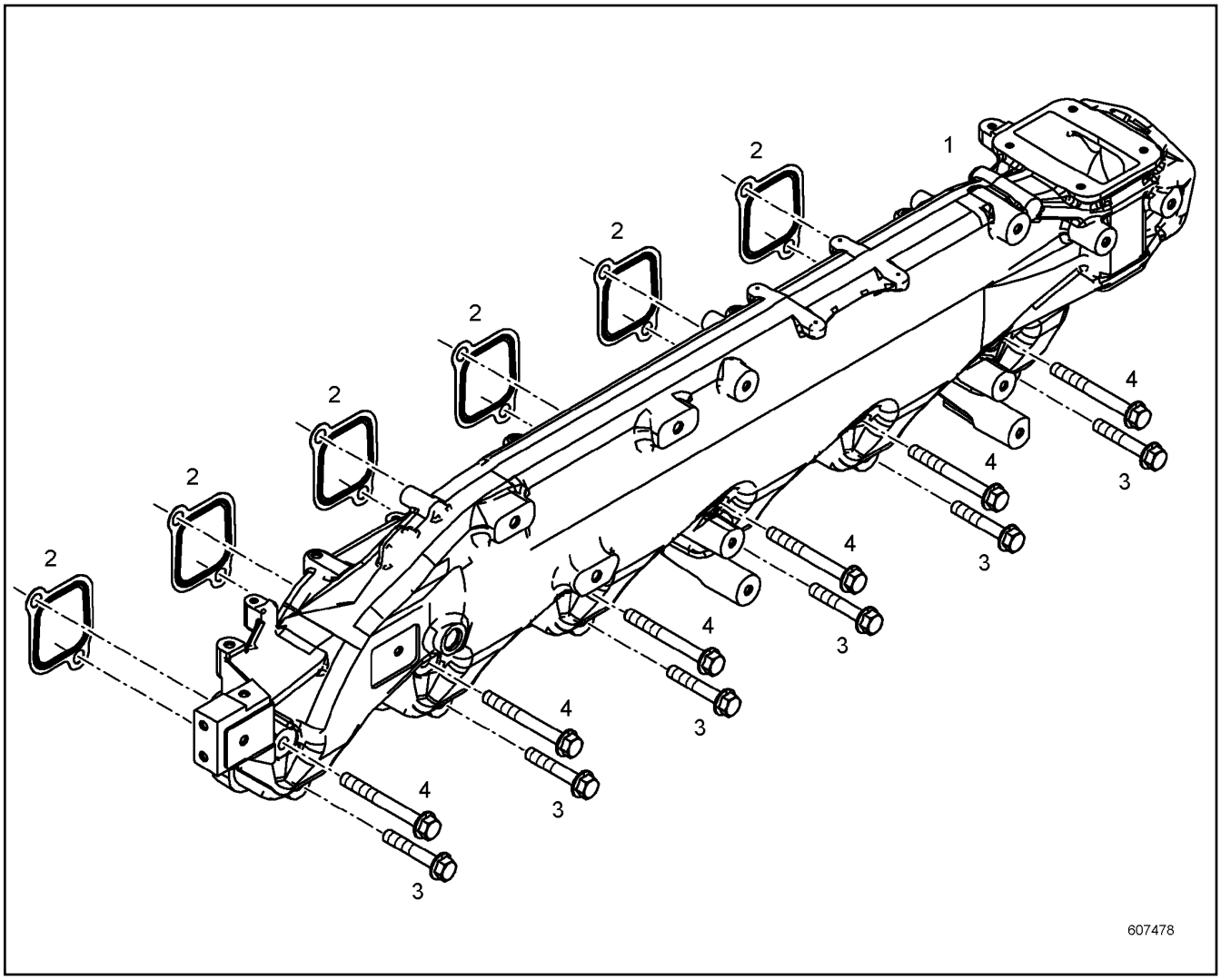

Pos.	Item	Quantity	Description	Bezeichnung	Serie	K
1	10146758	1	AIR SUCTION PIPE	LUFTANSAUGROHR		
2	10118556	6	SEAL	DICHTUNG		
3	10014638	6	HEX SCREW EN 1665 M10X60 8.8	SECHSKANTSCHRAUBE		
4	10489016	6	HEX SCREW DIN 6921 M10X90 8.8	SECHSKANTSCHRAUBE		

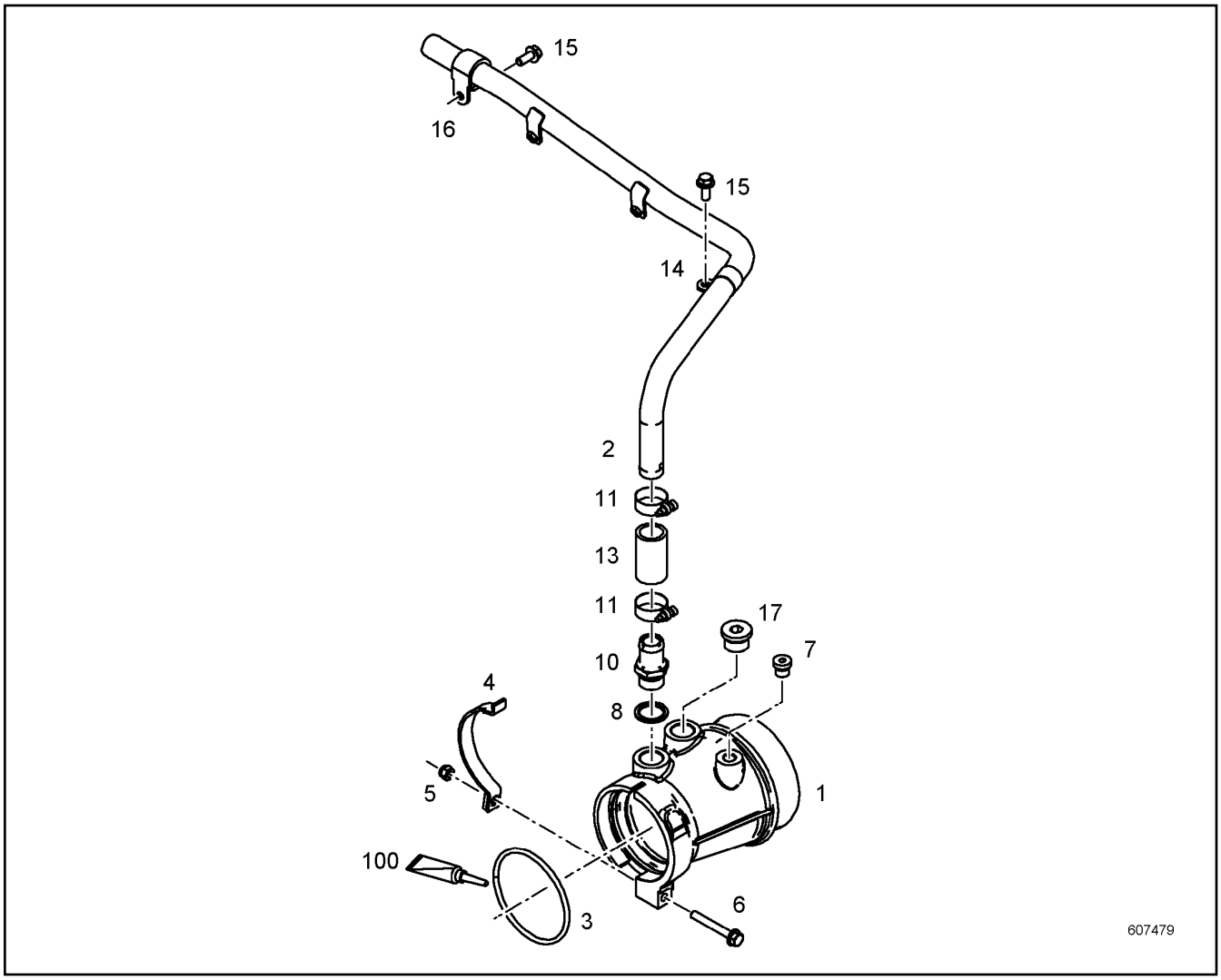

Pos.	Item	Quantity	Description	Bezeichnung	Serie	K
1	10141453	1	INTAKE STACK	ANSAUGSTUTZEN		
2	10147368	1	PIPELINE	ROHRLEITUNG		
3	11008055	1	O-RING	O-RING		
4	10127614	1	CLAMP	SCHELLE		
5	10443136	1	LOCK NUT M8 A2-70	SICHERUNGSMUTTER		
6	10027420	1	HEX SCREW EN 1665 M8X60 8.8	SECHSKANTSCHRAUBE		
7	7380566	1	SCREW PLUG	VERSCHLUSSSCHRAUBE		
8	10011870	1	SEALING RING	DICHTRING		
10	10121893	1	HOSE NIPPLE	SCHLAUCHNIPPEL		
11	4900778	2	HOSE CLAMP	SCHLAUCHSCHELLE		
13	9271340	1	RUBBER CONNECTION	GUMMIMUFFE		
14	7381631	1	CLAMP	SCHELLE		
15	10016906	2	HEX SCREW EN 1665 M8X20 8.8	SECHSKANTSCHRAUBE		
16	7381631	1	CLAMP	SCHELLE		
17	7381457	1	SCREW PLUG	VERSCHLUSSSCHRAUBE		
100	10285708	1	GREASE	FETT		

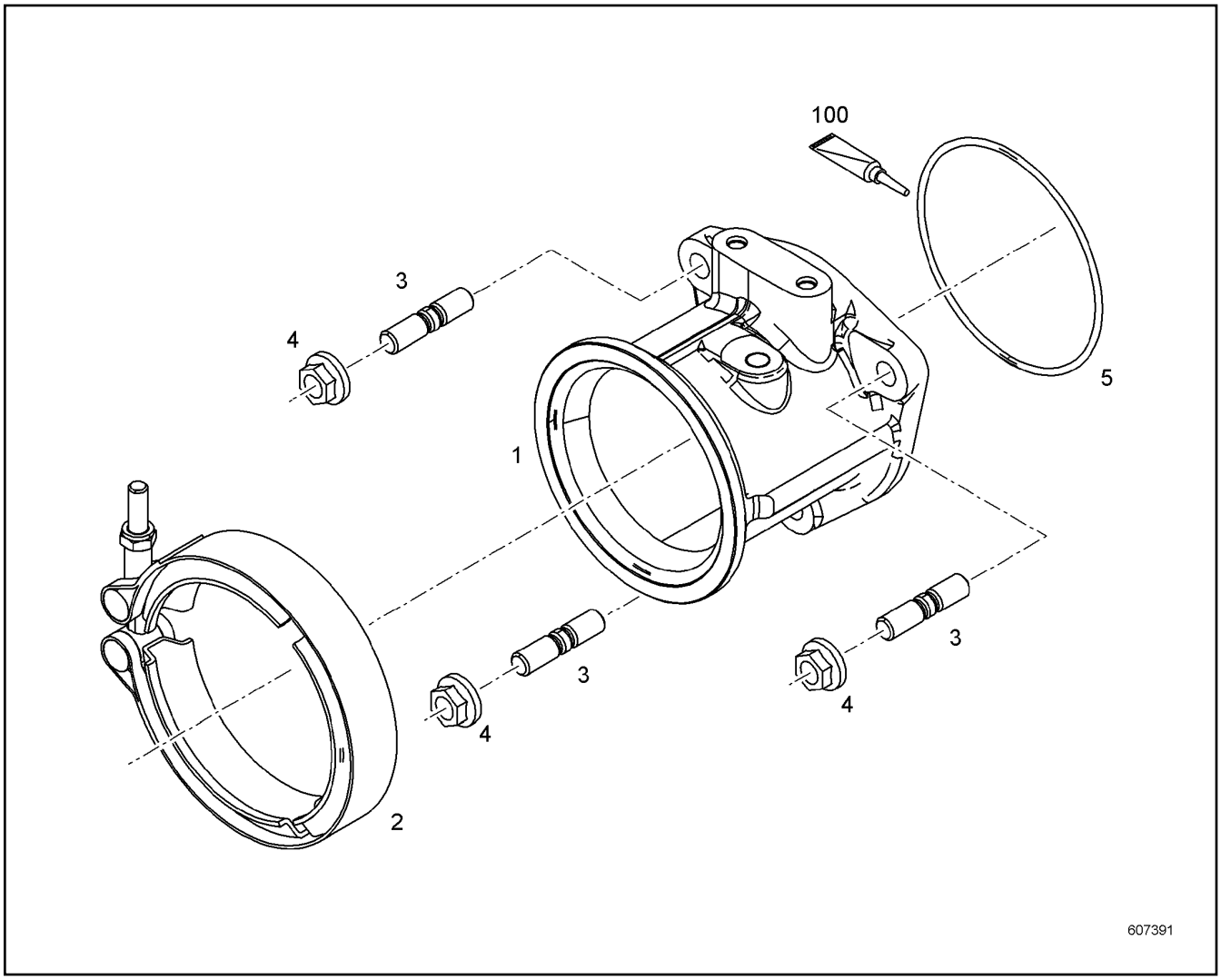

Pos.	Item	Quantity	Description	Bezeichnung	Serie	K
1	10141549	1	CONNECTING LINE	VERBINDUNGSLEITUNG		
2	10127984	1	RETAINER CLIP	SPANNSCHELLE		
3	10489376	3	DOUBLE-ENDED STUD DIN 835 M10X25 8.8	STIFTSCHRAUBE		
4	4980805	3	HEX NUT EN 1661 M10 8	SECHSKANTMUTTER		
5	7380605	1	O-RING	O-RING		
100	10285708	1	GREASE	FETT		

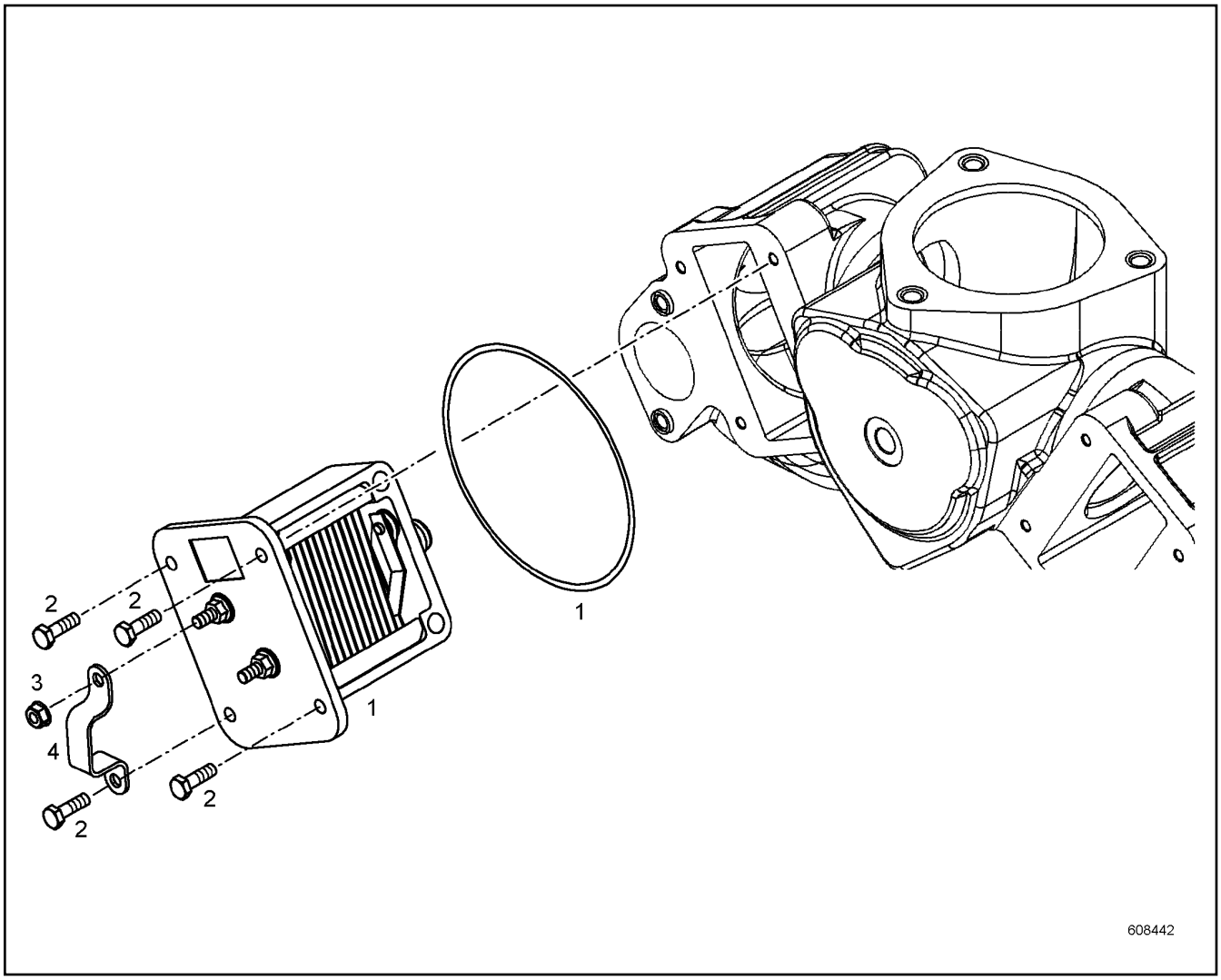

Pos.	Item	Quantity	Description	Bezeichnung	Serie	K
1	10299988	1	HEATING FLANGE PRE.ASS. ⇨ ❑ 224	HEIZFLANSCH VORM.		
2	10018711	4	HEX SCREW DIN 6921 M6X20 8.8	SECHSKANTSCHRAUBE		
3	10003366	1	RIBBED HEX NUT M6 10	SECHSKANTRIPPENMUTTER		
4	9080911	1	EARTH CONNECTION PLATE	MASSEVERBINDUNGSBLECH		

OHNE BILD
WITHOUT ILLUSTRATION
SANS PLANCHE
SIN FIG.
SEM ILUSTRAÇÃO
БЕЗ ИЗОБРАЖЕНИЯ

600000

Pos.	Item	Quantity	Description	Bezeichnung	Serie	K
1	10116255	1	O-RING	O-RING		

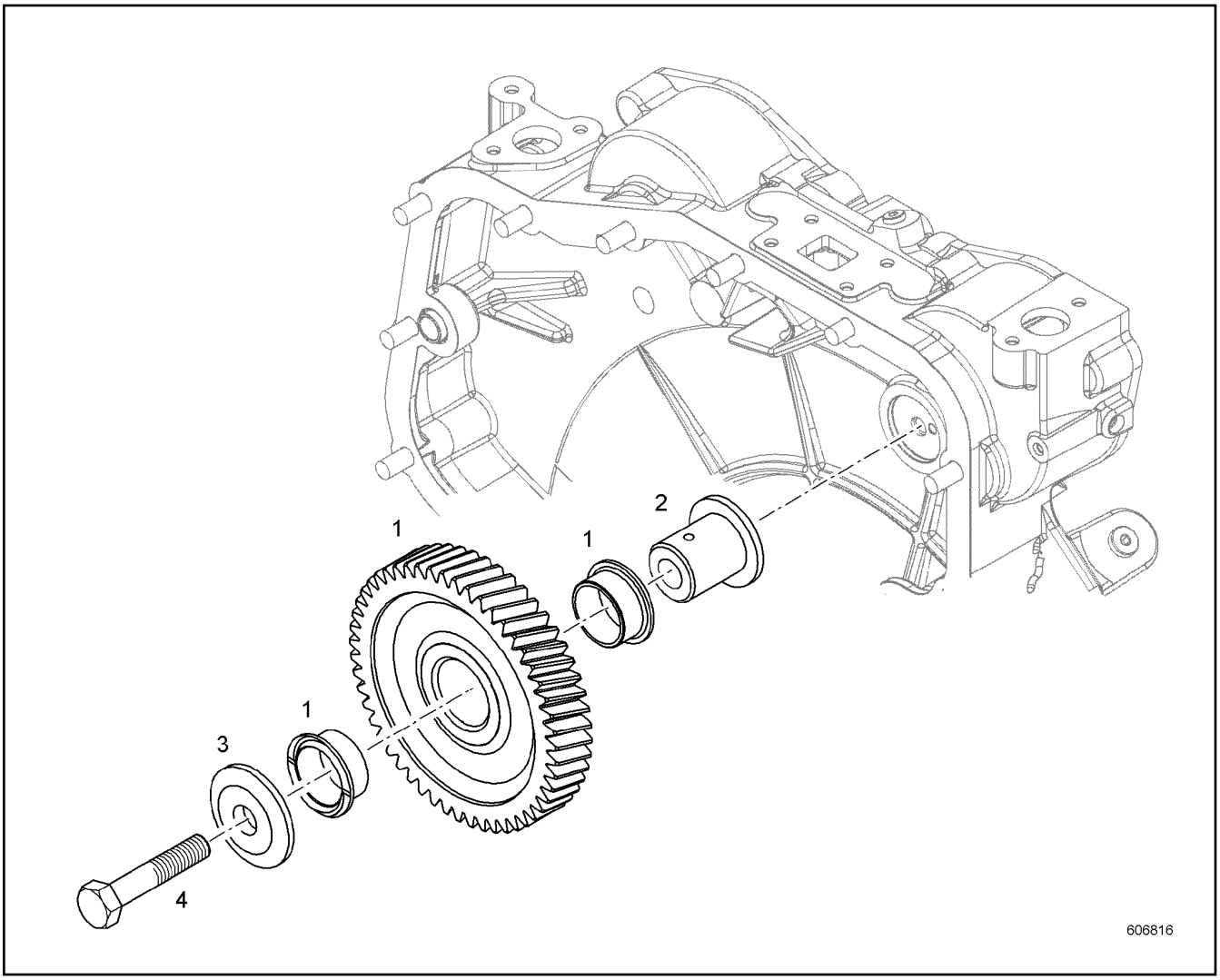

Pos.	Item	Quantity	Description	Bezeichnung	Serie	K
1	9072904	1	INTERMEDIATE GEAR PRE-ASS.	ZWISCHENRAD VORM.		
2	9072907	1	INTERMEDIATE WHEEL AXLE	ZWISCHENRADACHSE		
3	9072908	1	BEARING COVER	LAGERDECKEL		
4	10013916	1	HEX SCREW ISO 4014 M12X65 8.8	SECHSKANTSCHRAUBE		

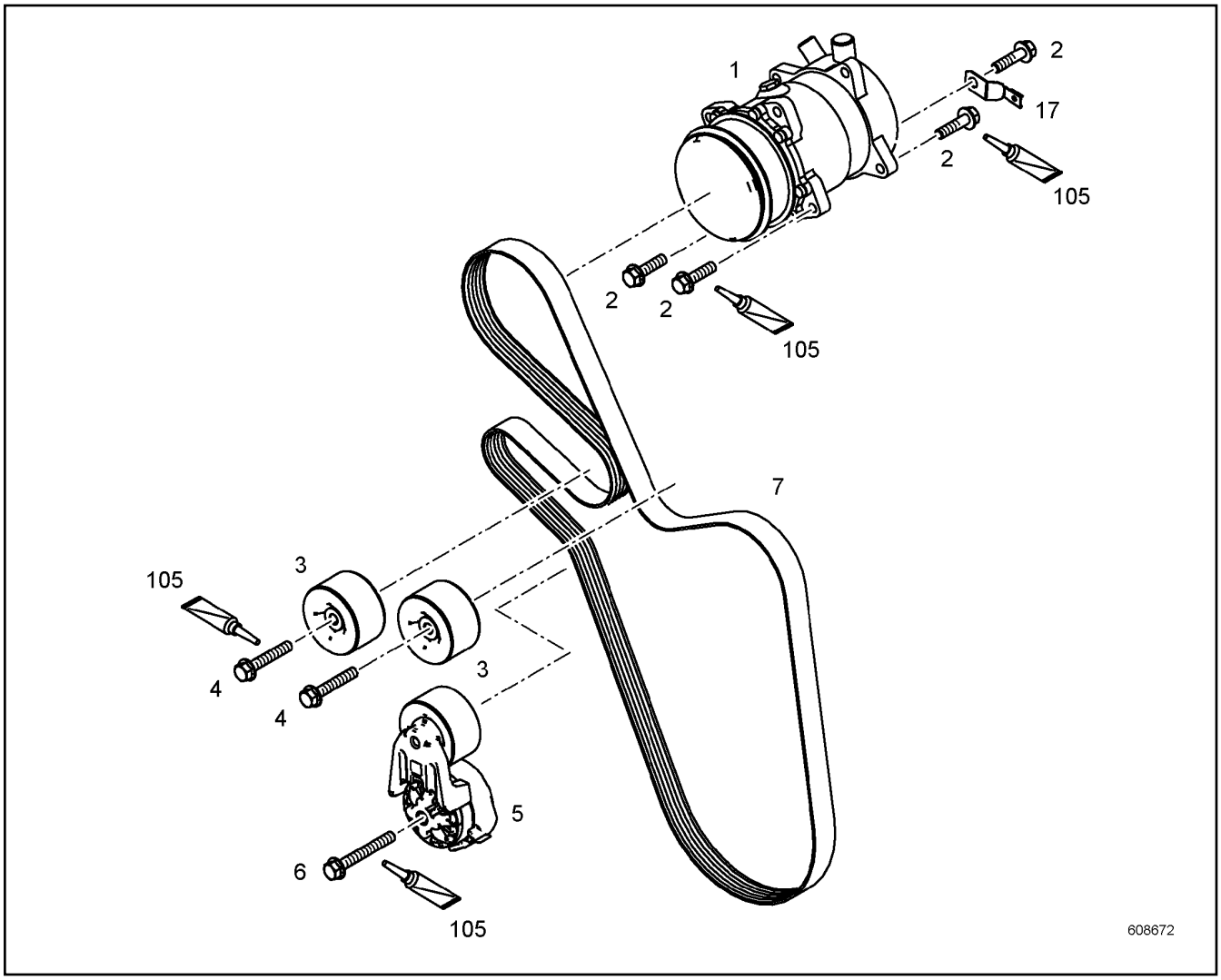

Pos.	Item	Quantity	Description	Bezeichnung	Serie	K
1	10116767	1	AIR CONDITIONING COMPRESSOR ⇨ ❑ 227	KLIMAKOMPRESSOR		
2	10112497	4	HEX SCREW DIN 6921 M10X40 8.8	SECHSKANTSCHRAUBE		
3	9077708	2	GUIDE PULLEY COMPL.	UMLENKROLLE VORM.		
4	10014638	2	HEX SCREW EN 1665 M10X60 8.8	SECHSKANTSCHRAUBE		
5	10153373	1	FASTENING DEVICE	SPANNVORRICHTUNG		
6	10101657	1	HEX SCREW EN 1665 M10X80 8.8	SECHSKANTSCHRAUBE		
7	11482412	1	V-RIPPED BELT	KEILRIPPENRIEMEN		
17	10041876	1	HOLDER	HALTER		
105	811205708	1	SCREW LOCKING	SCHRAUBENSICHERUNG		

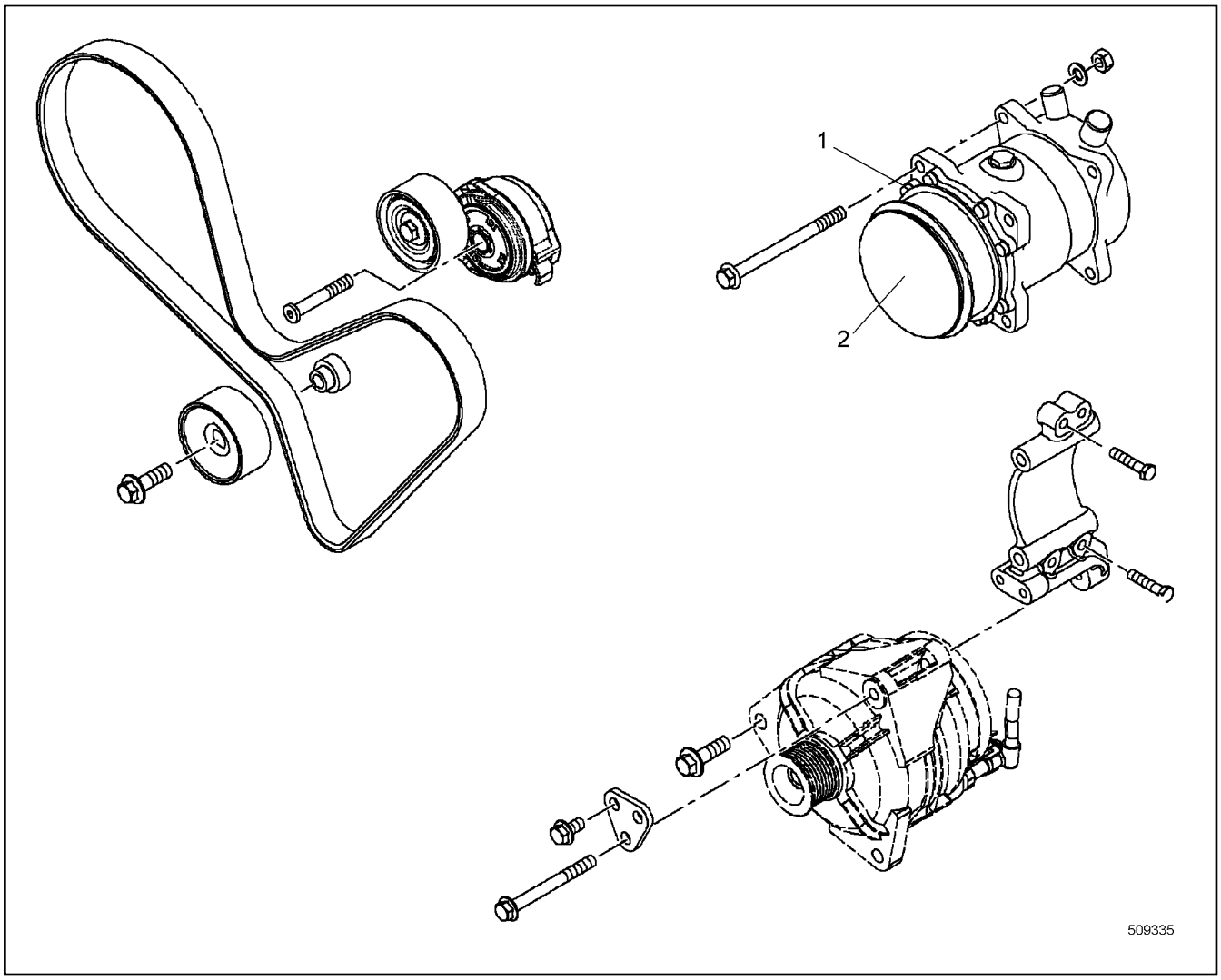

Pos.	Item	Quantity	Description	Bezeichnung	Serie	K
1	10115770	1	COUPLING CPL	KUPPLUNG KPL		
2	10040064	1	DUST-PROF COVER	STAUBSCHUTZ		

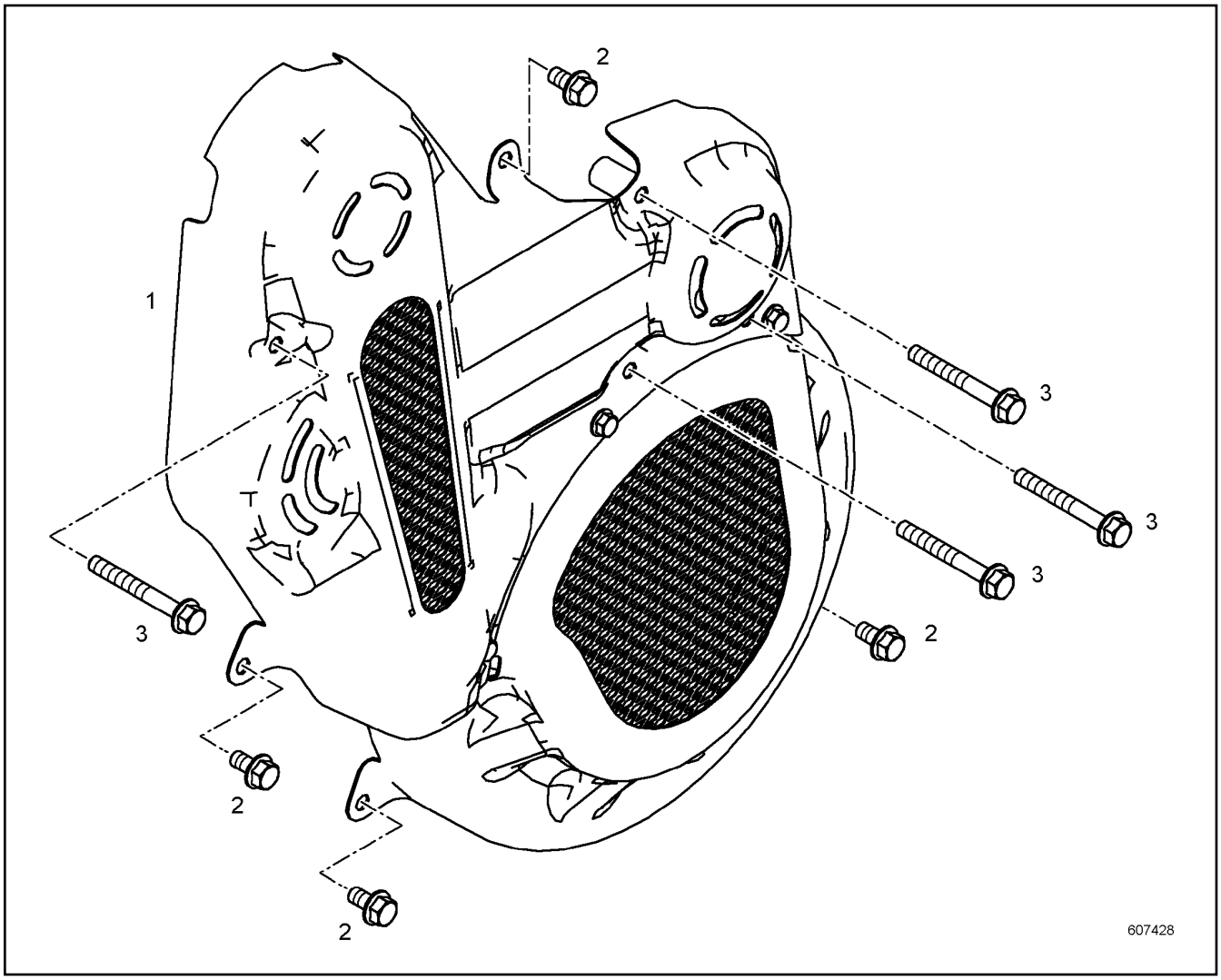

Pos.	Item	Quantity	Description	Bezeichnung	Serie	K
1	10146120	1	COVERING ASSEMBLY	ABDECKUNG ANBAU		
2	10030518	4	HEX SCREW EN 1665 M10X20 8.8	SECHSKANTSCHRAUBE		
3	10101657	4	HEX SCREW EN 1665 M10X80 8.8	SECHSKANTSCHRAUBE		

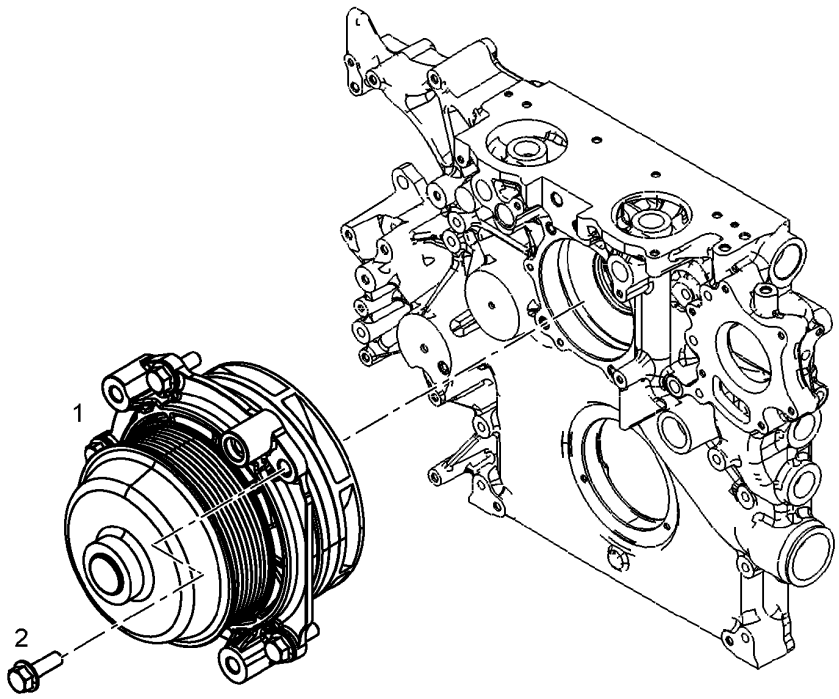

Pos.	Item	Quantity	Description	Bezeichnung	Serie	K
1	10150386	1	WATER PUMP, PRE-ASSEMBLED	WASSERPUMPE VORM.		
2	10009007	5	HEX SCREW EN 1665 M8X25 8.8	SECHSKANTSCHRAUBE		
100	10285708	1	GREASE	FETT		

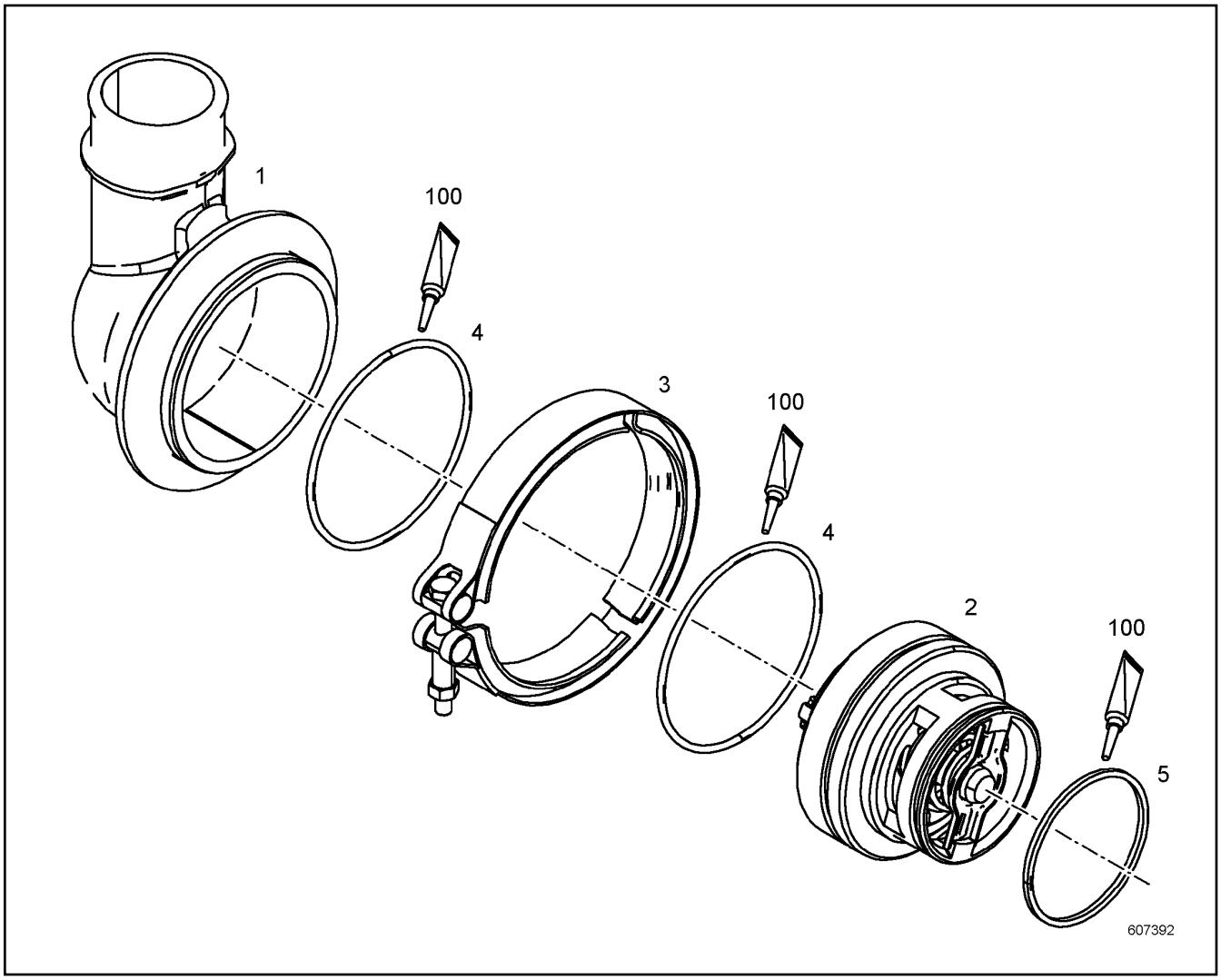

Pos.	Item	Quantity	Description	Bezeichnung	Serie	K
1	10148200	1	THERMOSTAT HOUSING	THERMOSTATGEHAEUSE		
2	10146029	1	THERMOSTAT	THERMOSTAT		
3	10138820	1	RETAINER CLIP	SPANNSCHELLE		
4	10002167	2	O-RING	O-RING		
5	7009080	1	O-RING	O-RING		
100	10285708	1	GREASE	FETT		

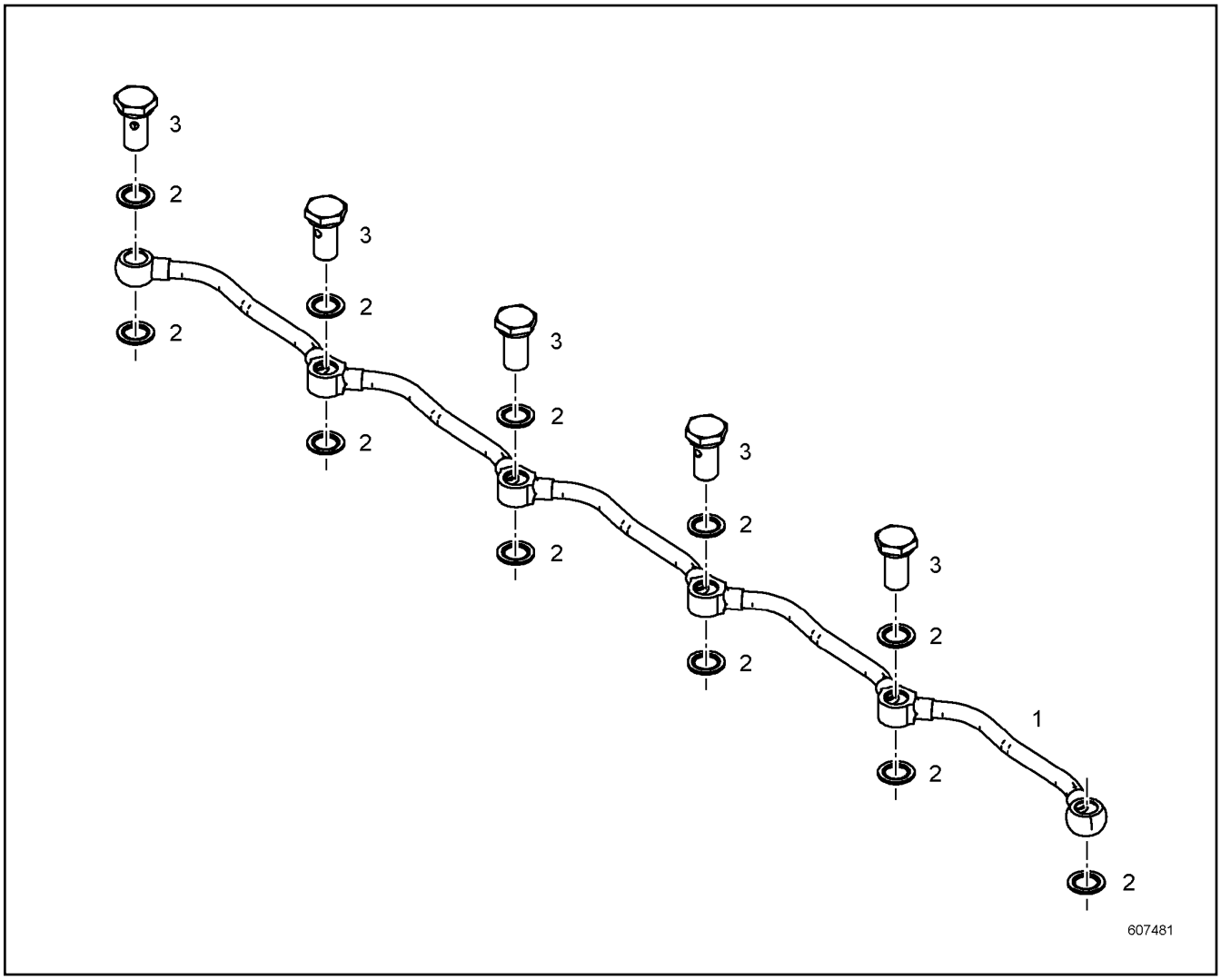

Pos.	Item	Quantity	Description	Bezeichnung	Serie	K
1	10149699	1	PIPELINE	ROHRLEITUNG		
2	10011866	11	SEALING RING	DICHTRING		
3	9080466	5	HOLLOW SCREW 10X1 9SMNPB28K	HOHLSCHRAUBE		

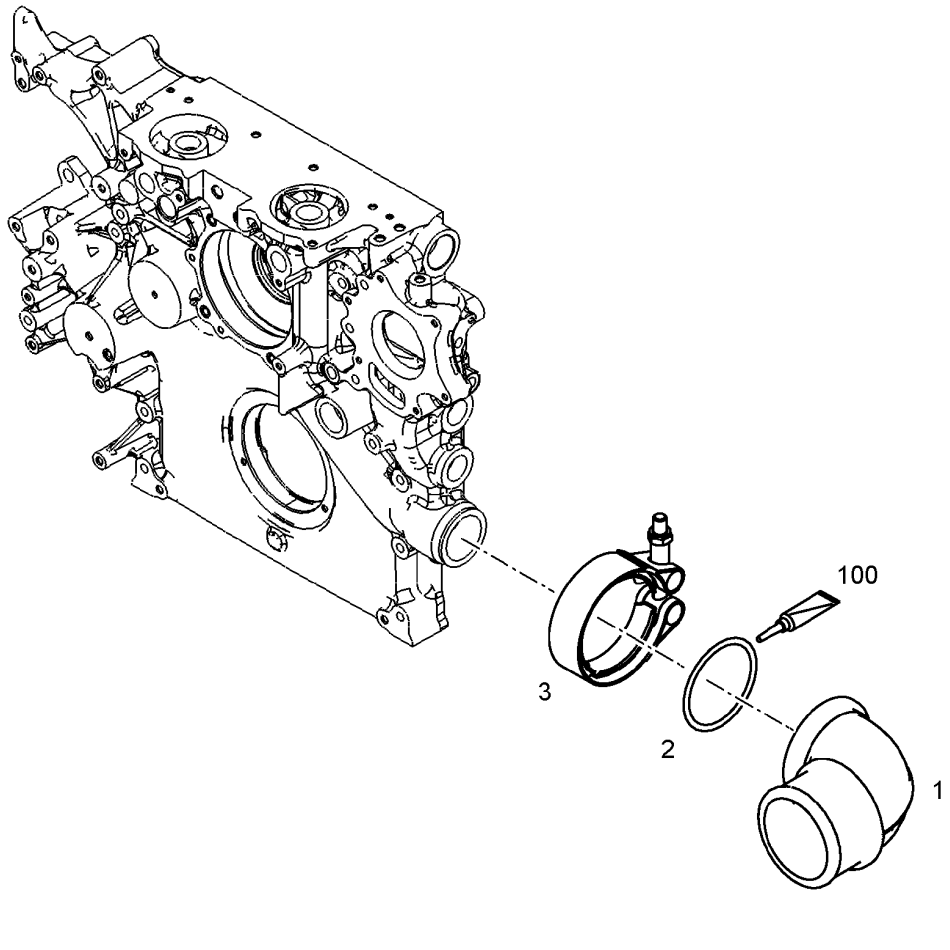

Pos.	Item	Quantity	Description	Bezeichnung	Serie	K
1	10153669	1	ELBOW	KRUEMMER		
2	10122841	1	RETAINER CLIP	SPANNSCHELLE		
3	7380083	1	O-RING	O-RING		
100	10285708	1	GREASE	FETT		

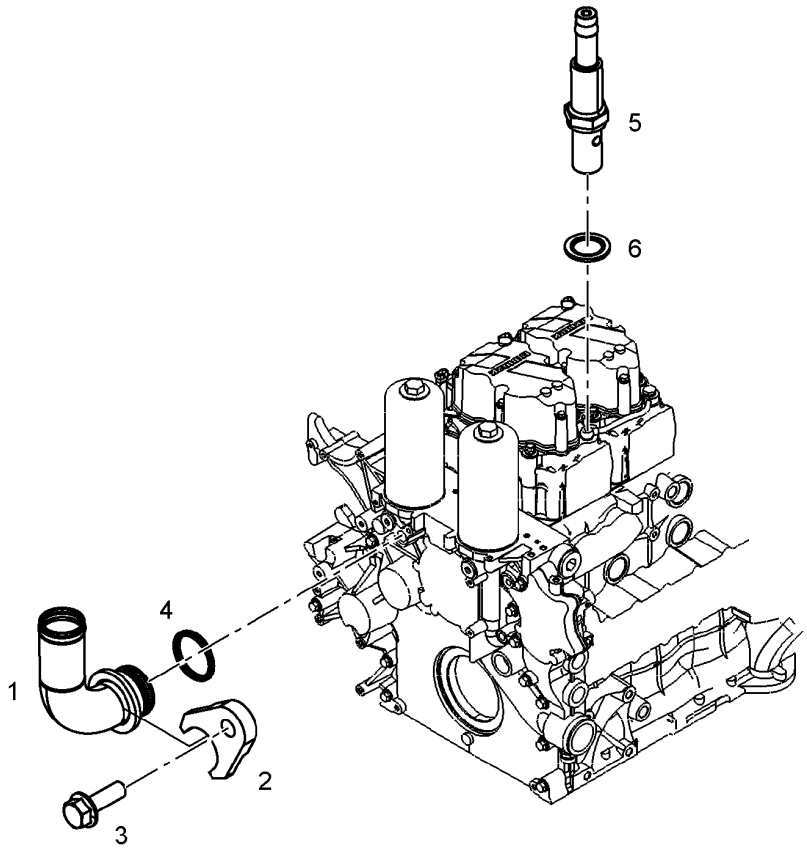

Pos.	Item	Quantity	Description	Bezeichnung	Serie	K
1	10142668	1	HOSE NIPPLE	SCHLAUCHNIPPEL		
2	10142763	1	PLATE	BLECH		
3	10009007	1	HEX SCREW EN 1665 M8X25 8.8	SECHSKANTSCHRAUBE		
4	7381526	1	O-RING	O-RING		
5	10140969	1	HOSE NIPPLE	SCHLAUCHNIPPEL		
6	10011866	1	SEALING RING	DICHTRING		

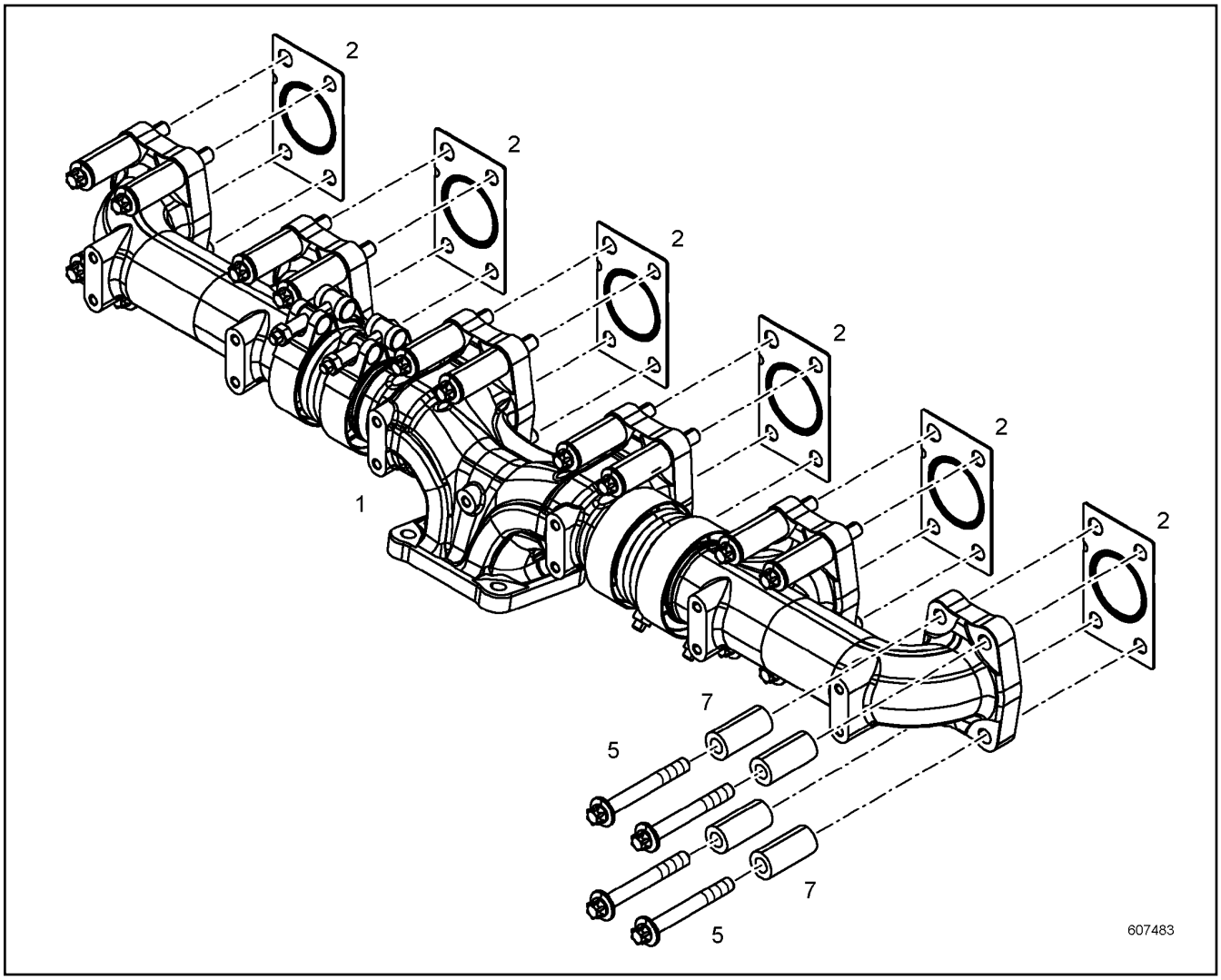

Pos.	Item	Quantity	Description	Bezeichnung	Serie	K
1	10141443	1	EXHAUST PIPE PRE-ASS. ⇨ ❑ 235	ABGASROHR VORM.		
2	10135885	6	SEAL	DICHTUNG		
5	10138772	24	HEXALOBULAR HEAD SCREW	SECHSRUNDSCHRAUBE		
7	10141438	24	DISTANCE SLEEVE	DISTANZHUELSE		

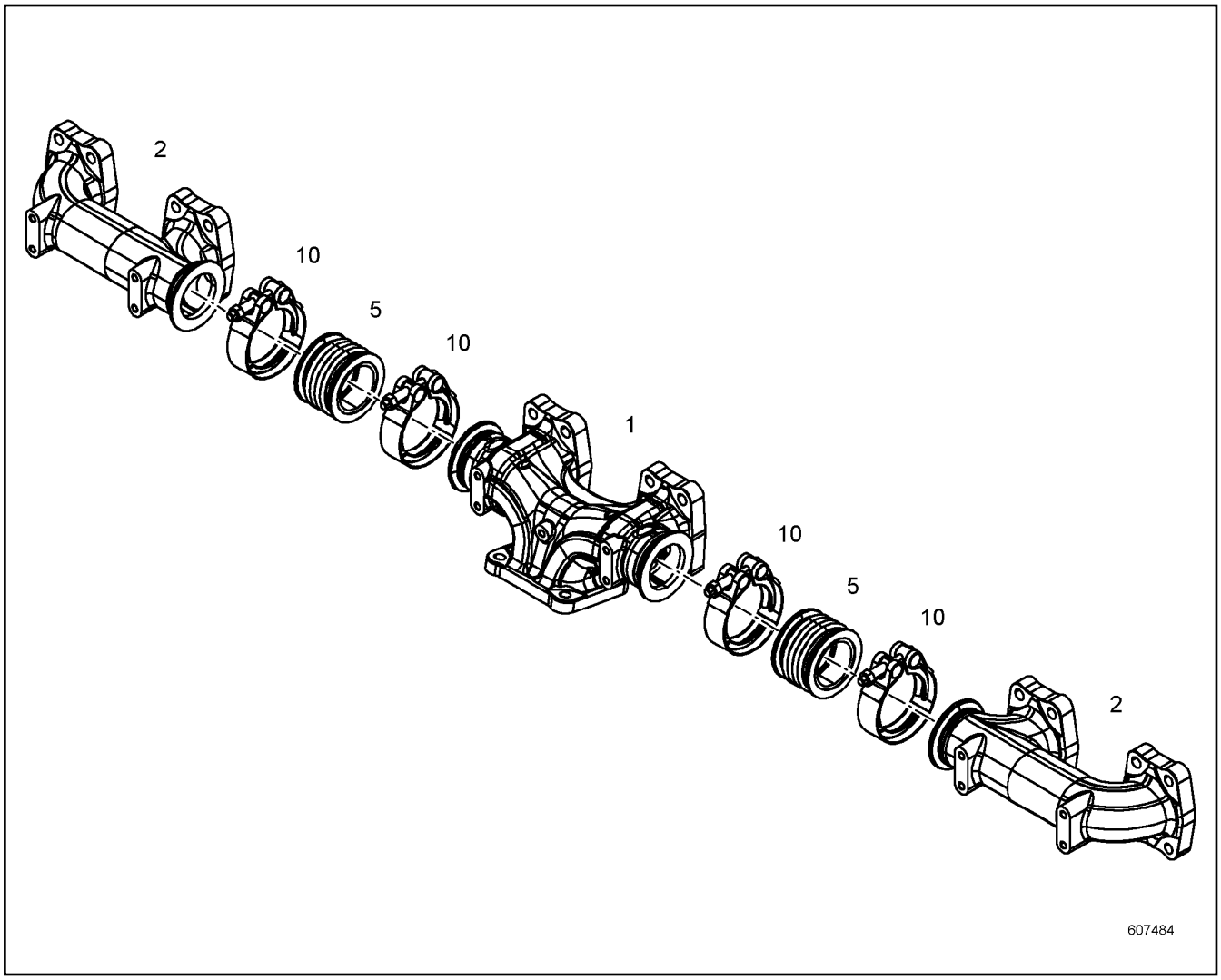

Pos.	Item	Quantity	Description	Bezeichnung	Serie	K
1	10141440	1	OUTLET MANIFOLD	ABGASKRUEMMER		
2	10141442	2	OUTLET MANIFOLD	ABGASKRUEMMER		
5	10141520	2	COMPENSATOR	KOMPENSATOR		
10	10132073	4	RETAINER CLIP	SPANNSCHELLE		

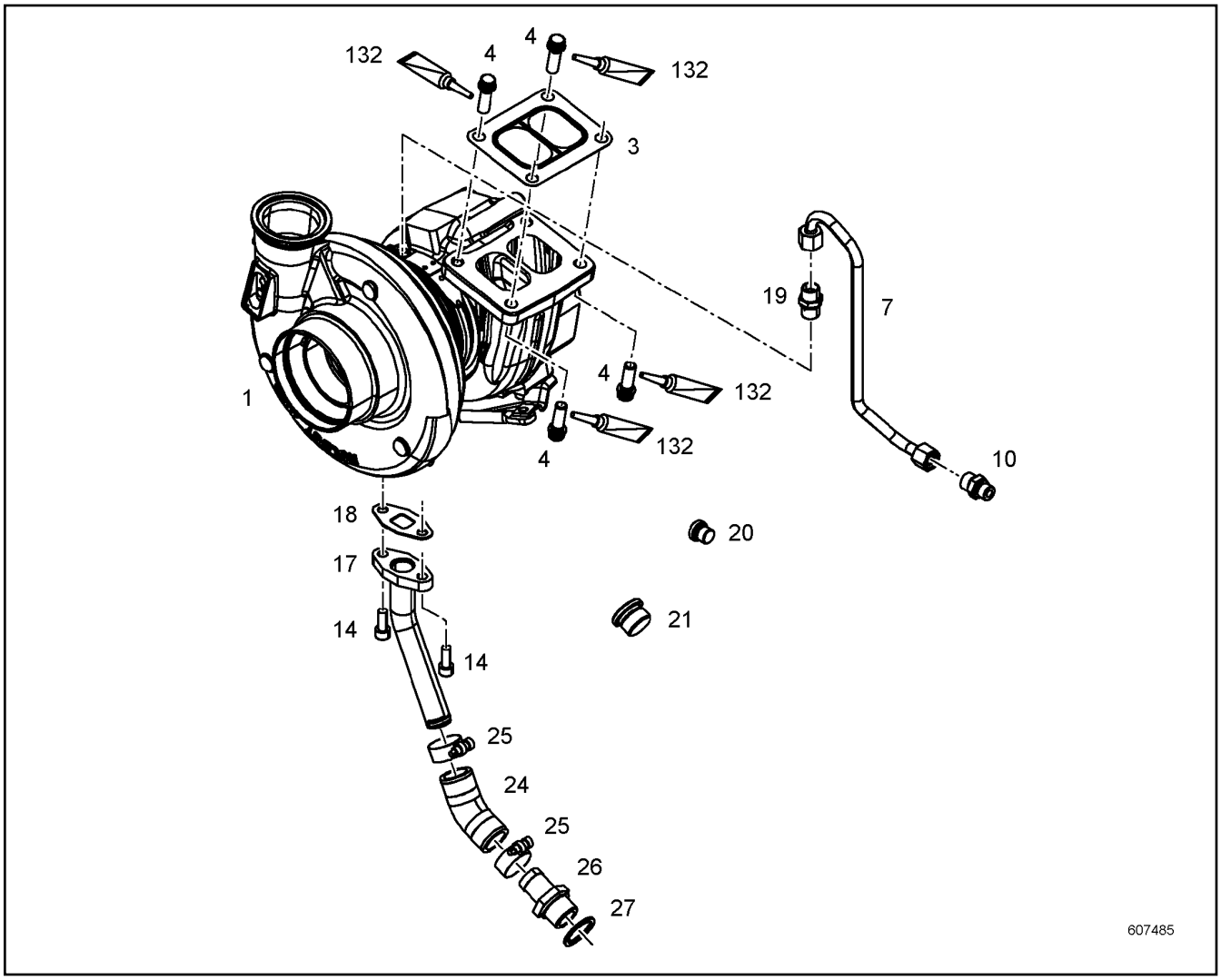

Pos.	Item	Quantity	Description	Bezeichnung	Serie	K
1	10139624	1	TURBOCHARGER	TURBOLADER		
3	10125740	1	SEAL	DICHTUNG		
4	10132558	4	12-SIDED SCREW M10X30 X5NICRTI26-15	ZWOELFKANTSCHRAUBE		
7	10140137	1	LUBRICATING OIL LINE	SCHMIEROELLEITUNG		
10	4981235	1	FLANGE JOINT	VERSCHRAUBUNG		
14	4043082	2	SOCKET HEAD SCREW ISO 4762 M8X20 10.9	ZYLINDERSCHRAUBE		
17	10140138	1	OIL RETURN PIPE	OELRUECKLAUFLEITUNG		
18	10115623	1	SEAL	DICHTUNG		
19	7402493	1	SCREW-ON CONNECTION	EINSCHRAUBSTUTZEN		
20	7380566	1	SCREW PLUG	VERSCHLUSSSCHRAUBE		
21	7381457	1	SCREW PLUG	VERSCHLUSSSCHRAUBE		
24	10128875	1	RUBBER CONNECTION	GUMMIMUFFE		
25	4900778	2	HOSE CLAMP	SCHLAUCHSCHELLE		
26	9140351	1	HOSE NIPPLE	SCHLAUCHNIPPEL		
27	10011870	1	SEALING RING	DICHTRING		
132	10002552	1	COPPER PASTE	KUPFERPASTE		

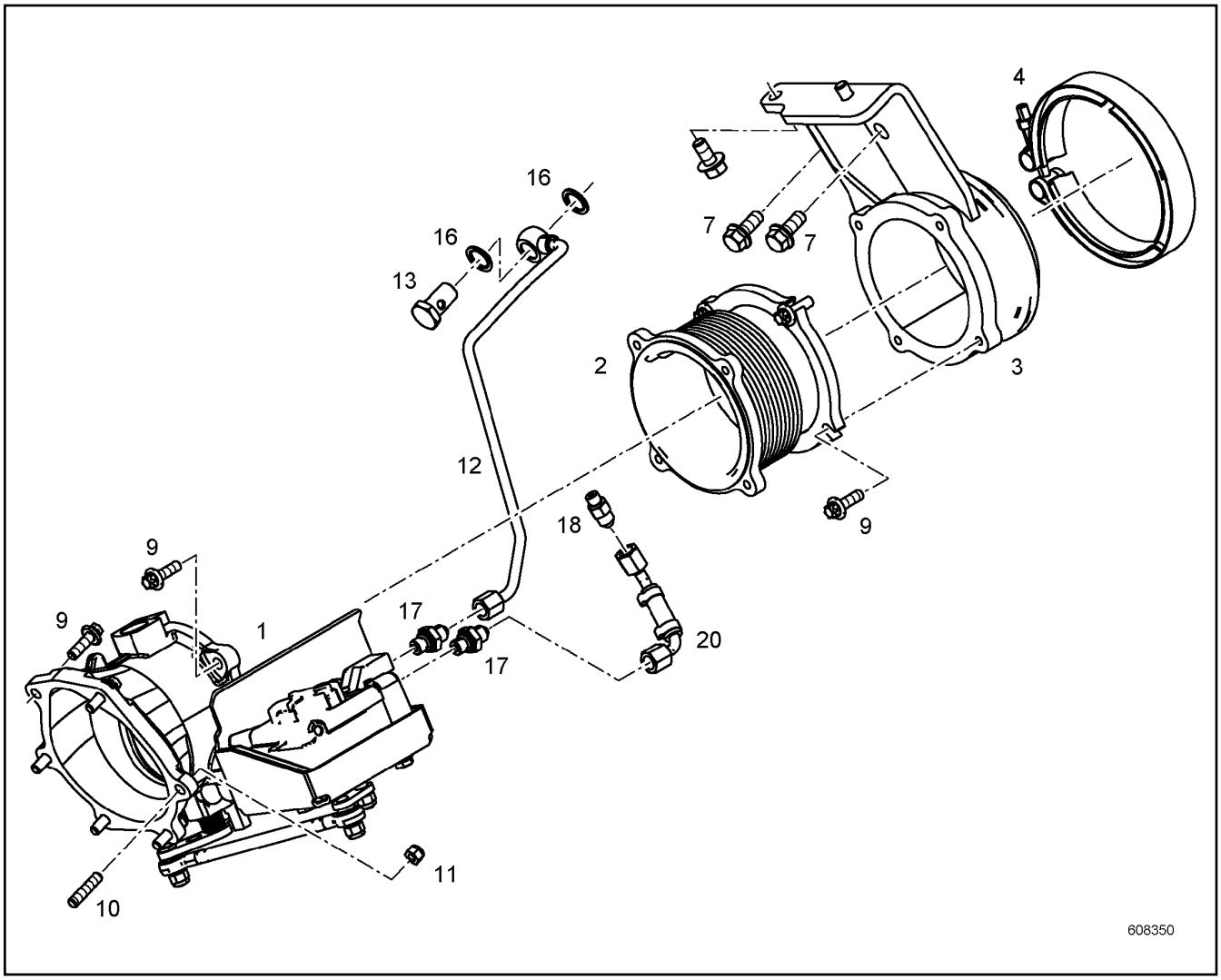

Pos.	Item	Quantity	Description	Bezeichnung	Serie	K
1	10153118	1	EXHAUST FLAP	ABGASKLAPPE		
2	10149145	1	COMPENSATOR	KOMPENSATOR		
3	10146274	1	EXHAUST NOZZLE	ABGASSTUTZEN		
4	10138820	1	RETAINER CLIP	SPANNSCHELLE		
7	10219458	4	HEX SCREW DIN 6921 M10X30 10.9	SECHSKANTSCHRAUBE		
9	10127323	12	HEXALOBULAR HEAD SCREW M8X25 21CRM	SECHSRUNDSCHRAUBE		
10	11690424	2	DOUBLE-ENDED STUD DIN 939 M8X25	STIFTSCHRAUBE		
11	7381182	2	HEX NUT AEHNL.ISO 7042 M8 10	SECHSKANTMUTTER		
12	10145914	1	PIPELINE	ROHRLEITUNG		
13	4980741	1	HOLLOW SCREW DIN 7643 12X3	HOHLSCHRAUBE		
16	10011867	2	SEALING RING	DICHTRING		
17	10801399	2	FLANGE JOINT	VERSCHRAUBUNG		
18	10813934	1	FLANGE JOINT	VERSCHRAUBUNG		
20	10143819	1	PIPELINE	ROHRLEITUNG		

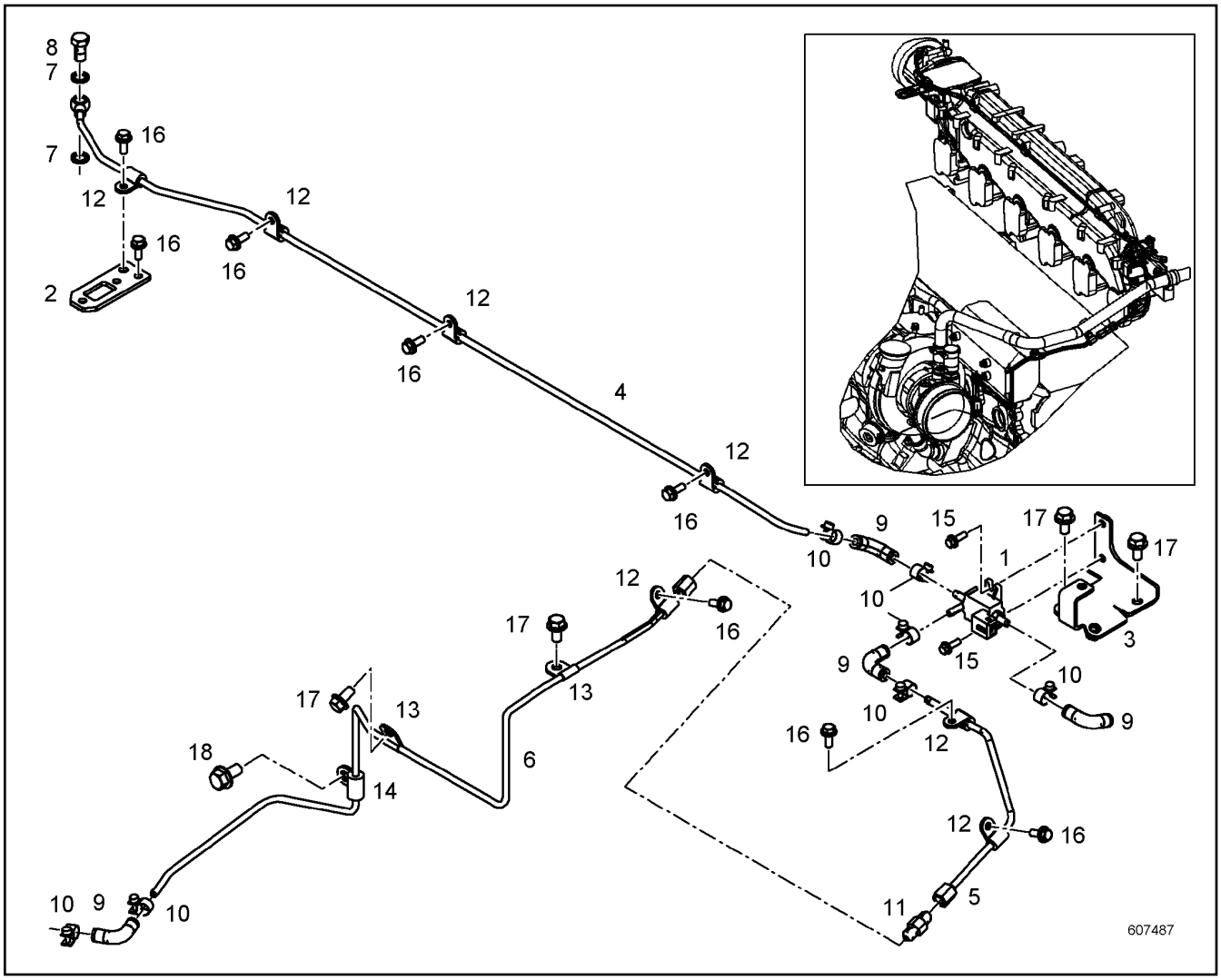

Pos.	Item	Quantity	Description	Bezeichnung	Serie	K
1	10149191	1	CYCLE VALVE	TAKTVENTIL		
2	10145373	1	HOLDER	HALTER		
3	10146836	1	HOLDER	HALTER		
4	10146838	1	PIPELINE	ROHRLEITUNG		
5	10146839	1	PIPELINE	ROHRLEITUNG		
6	10146840	1	PIPELINE	ROHRLEITUNG		
7	10011864	2	SEALING RING	DICHTRING		
8	4079160	1	HOLLOW SCREW DIN 7643 M10X1	HOHLSCHRAUBE		
9	10128228	4	RUBBER CONNECTION	GUMMIMUFFE		
10	11005281	7	HOSE CLAMP	SCHLAUCHSCHELLE		
11	10334218	1	FITTINGS	STUTZEN		
12	7381292	7	CLAMP	SCHELLE		
13	11000593	2	CLAMP	SCHELLE		
14	9077164	1	PIPE CLAMP	ROHRSCHELLE		
15	407350108	2	HEX SCREW EN 1665 M5X16 10.9	SECHSKANTSCHRAUBE		
16	407350208	8	HEX SCREW EN 1665 M6X16 8.8	SECHSKANTSCHRAUBE		
17	10005078	4	HEX SCREW EN 1665 M8X16 8.8	SECHSKANTSCHRAUBE		
18	10030518	1	HEX SCREW EN 1665 M10X20 8.8	SECHSKANTSCHRAUBE		

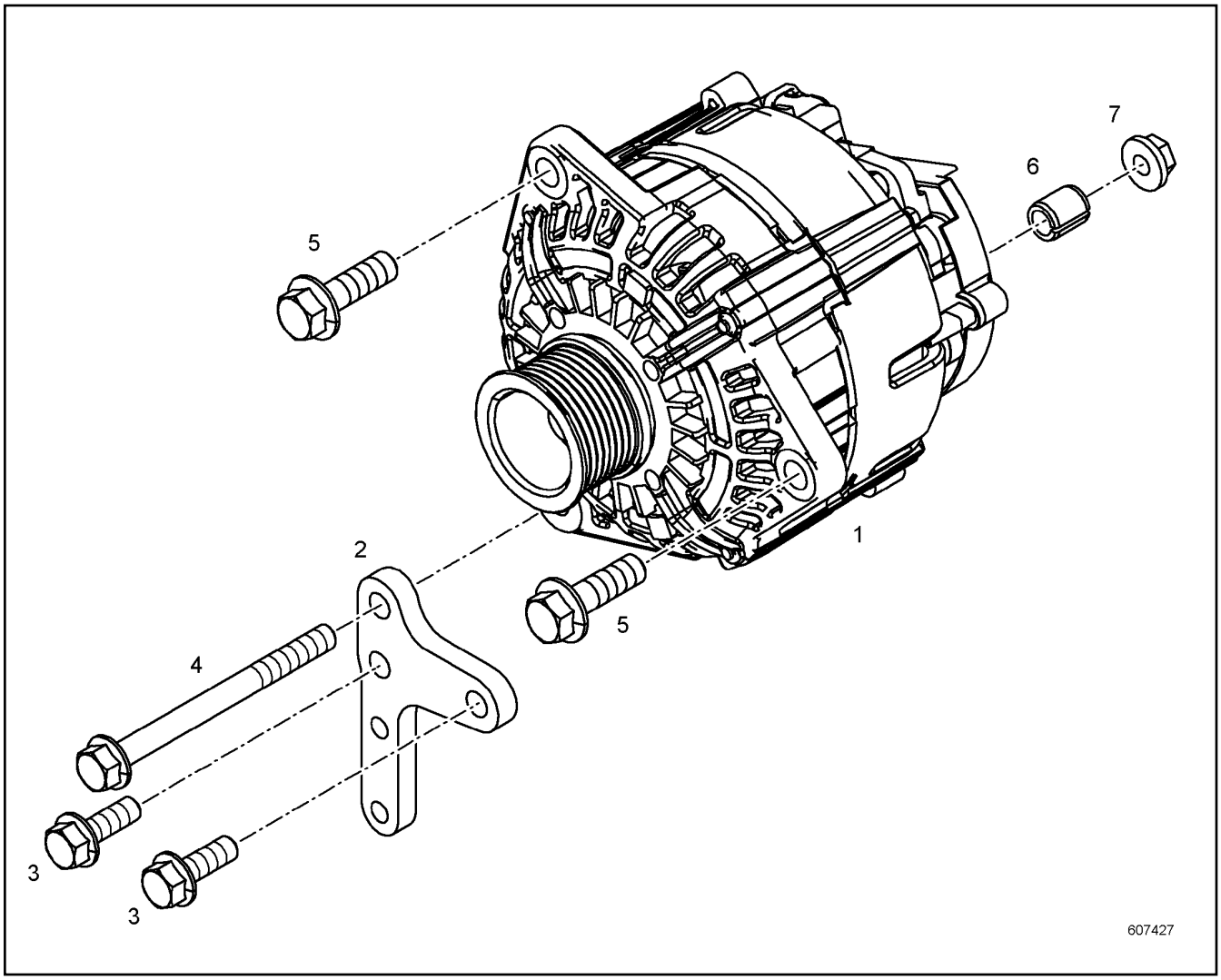

Pos.	Item	Quantity	Description	Bezeichnung	Serie	K
1	10148088	1	THREE PHASE CURRENT GENERATOR	DREHSTROMGENERATOR		
2	10149477	1	MOUNTING SHEET	BEFESTIGUNGSBLECH		
3	10219458	2	HEX SCREW DIN 6921 M10X30 10.9	SECHSKANTSCHRAUBE		
4	10113710	1	HEX SCREW EN 1665 M10X120 8.8	SECHSKANTSCHRAUBE		
5	10045355	2	HEX SCREW EN 1665 M12X40 10.9	SECHSKANTSCHRAUBE		
6	10145395	1	BUSHING	BUCHSE		
7	4980805	1	HEX NUT EN 1661 M10 8	SECHSKANTMUTTER		

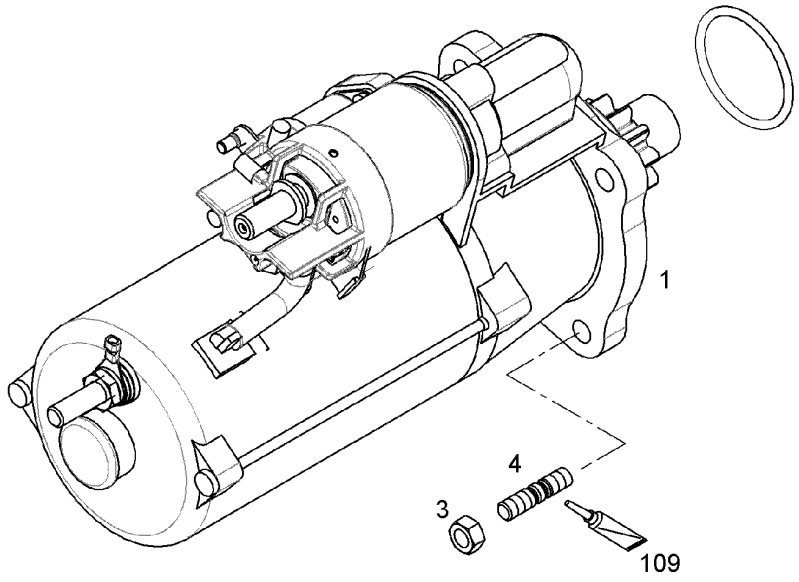

Pos.	Item	Quantity	Description	Bezeichnung	Serie	K
1	10410932	1	STARTER	STARTER		
3	4980805	3	HEX NUT EN 1661 M10 8	SECHSKANTMUTTER		
4	4901450	3	DOUBLE-ENDED STUD DIN 835 M10X30 8.8	STIFTSCHRAUBE		
109	8655016	1	SCREW LOCKING	SCHRAUBENSICHERUNG		

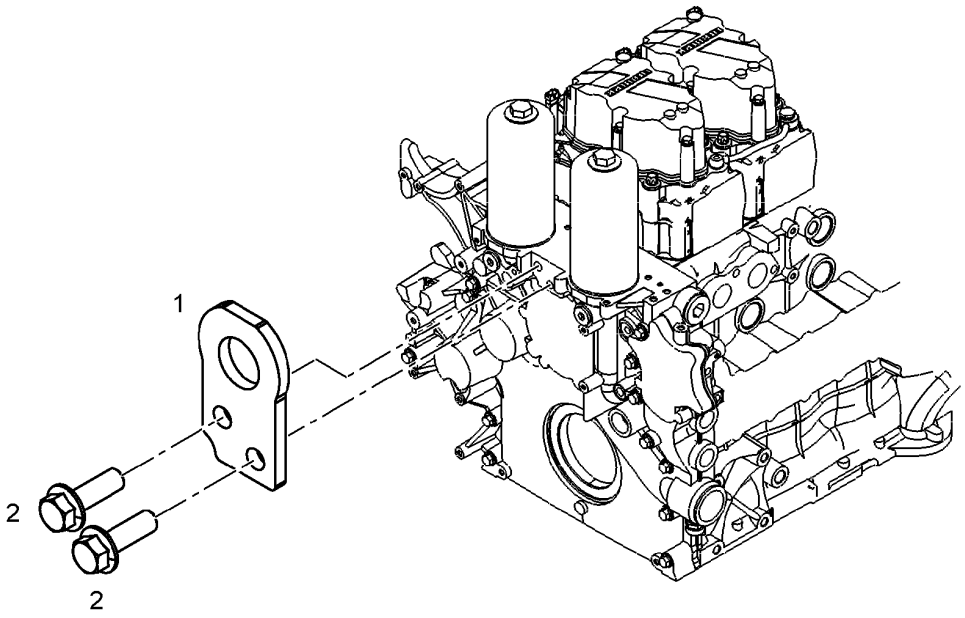

607420

Pos.	Item	Quantity	Description	Bezeichnung	Serie	K
1	10145229	1	TRANSPORTER CONSOLE	TRANSPORTKONSOLE		
2	11181806	2	HEX SCREW DIN 6921 M16X50 8.8	SECHSKANTSCHRAUBE		

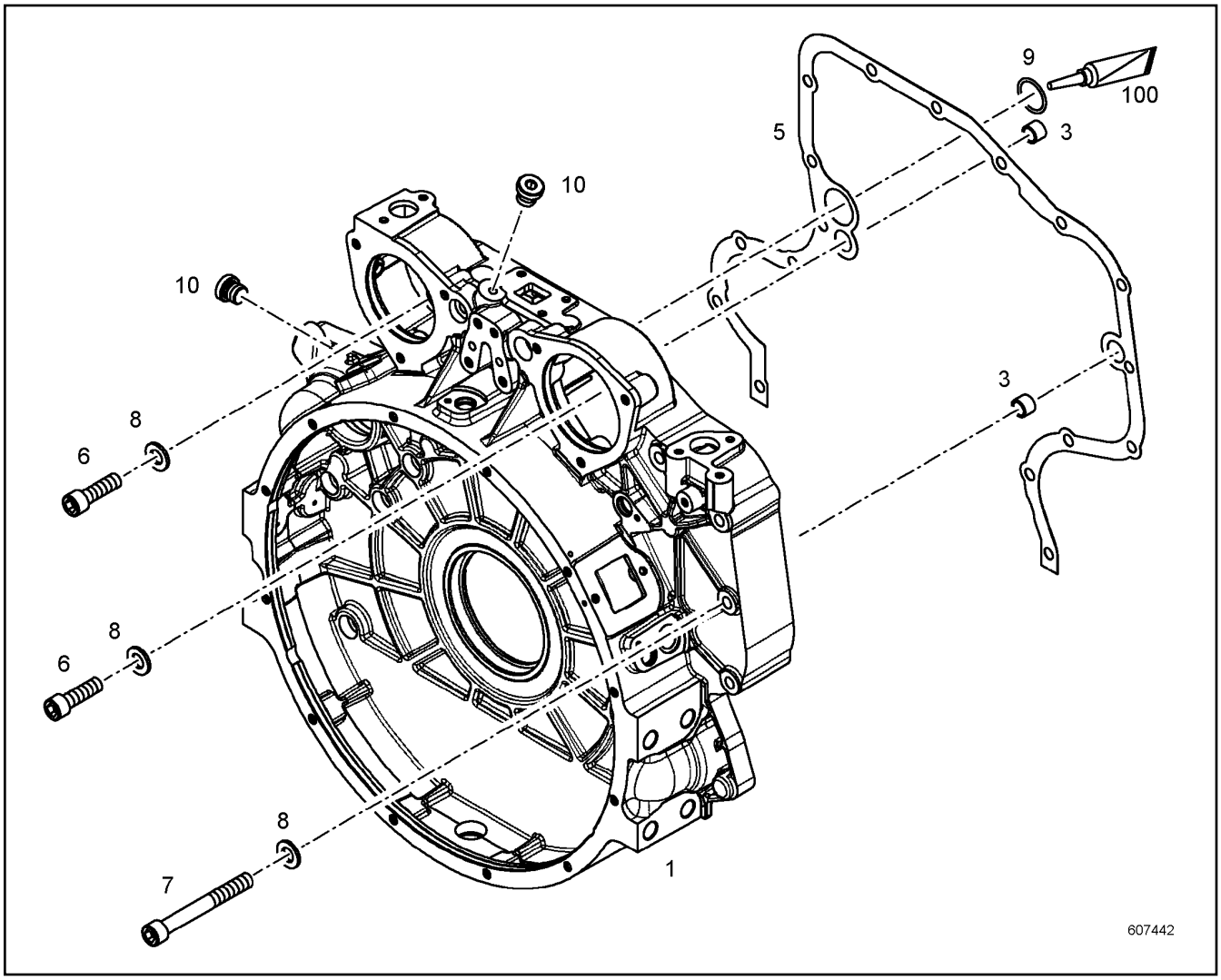

Pos.	Item	Quantity	Description	Bezeichnung	Serie	K
1	10115576	1	FLYWHEEL HOUSING PRE-ASS.	SCHWUNGRADGEHAEUSE VORM		
3	9074798	2	TIGHT FIT SLEEVE 16.5X20X20 S235JR;EN 10	PASSHUELSE		
5	10137721	1	SEAL	DICHTUNG		
6	4980012	2	SOCKET HEAD SCREW ISO 4762 M12X40 10.9	ZYLINDERSCHRAUBE		
7	4600385	15	SOCKET HEAD SCREW ISO 4762 M12X100 10.	ZYLINDERSCHRAUBE		
8	10289804	17	WASHER ISO 7089 13	SCHEIBE		
9	7380653	1	O-RING	O-RING		
10	7381638	2	SCREW PLUG	VERSCHLUSSSCHRAUBE		
100	10282622	1	GREASE	FETT		

OHNE BILD
WITHOUT ILLUSTRATION
SANS PLANCHE
SIN FIG.
SEM ILUSTRAÇÃO
БЕЗ ИЗОБРАЖЕНИЯ

600000

Pos.	Item	Quantity	Description	Bezeichnung	Serie	K
1	10119129	1	SHEET	PLATTE		
2	9079130	1	SEAL	DICHTUNG		
3	10016906	4	HEX SCREW EN 1665 M8X20 8.8	SECHSKANTSCHRAUBE		

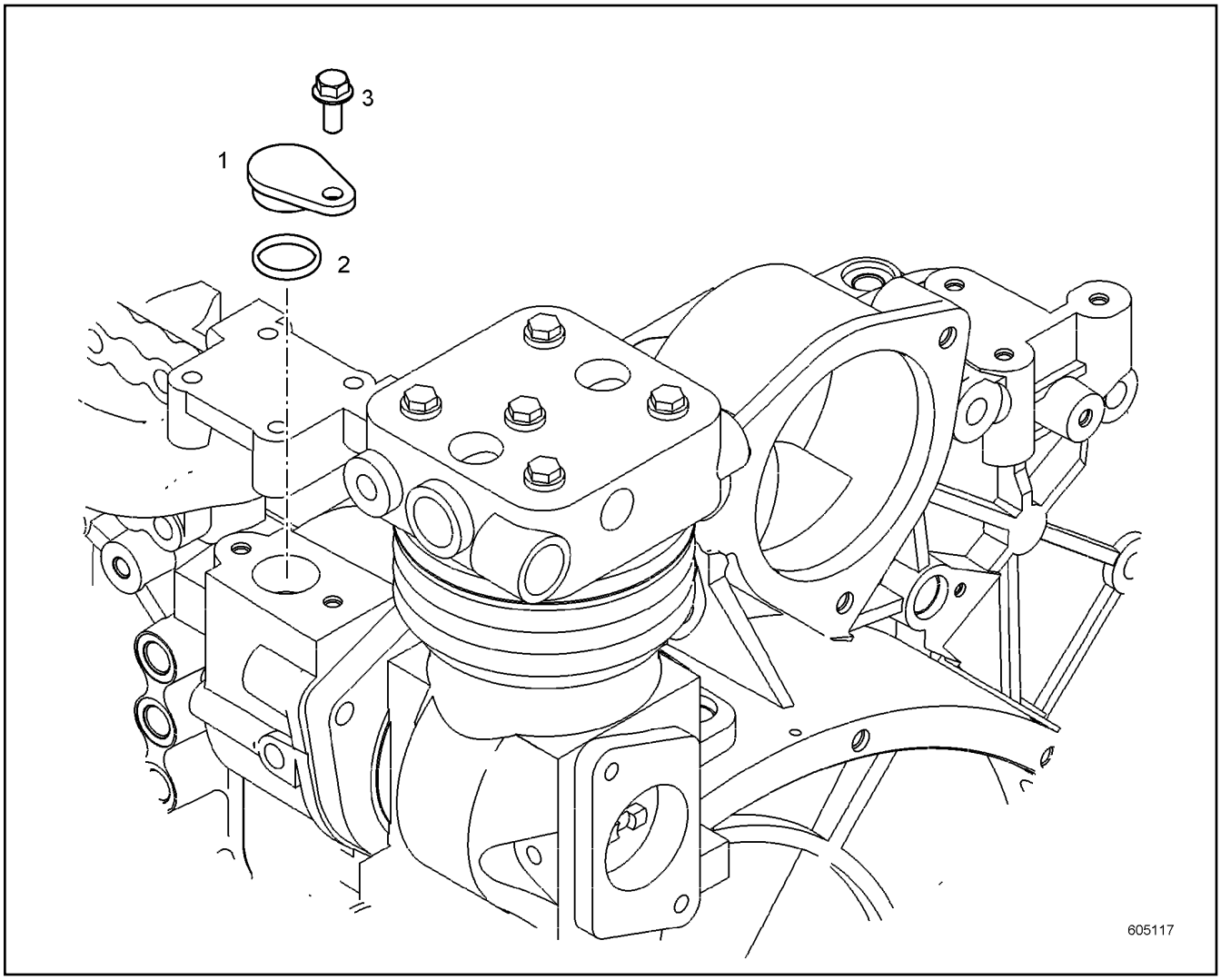

Pos.	Item	Quantity	Description	Bezeichnung	Serie	K
1	10128440	1	LOCKING PIECES	VERSCHLUSSTEILE		
2	10217777	1	O-RING	O-RING		
3	10016906	1	HEX SCREW EN 1665 M8X20 8.8	SECHSKANTSCHRAUBE		

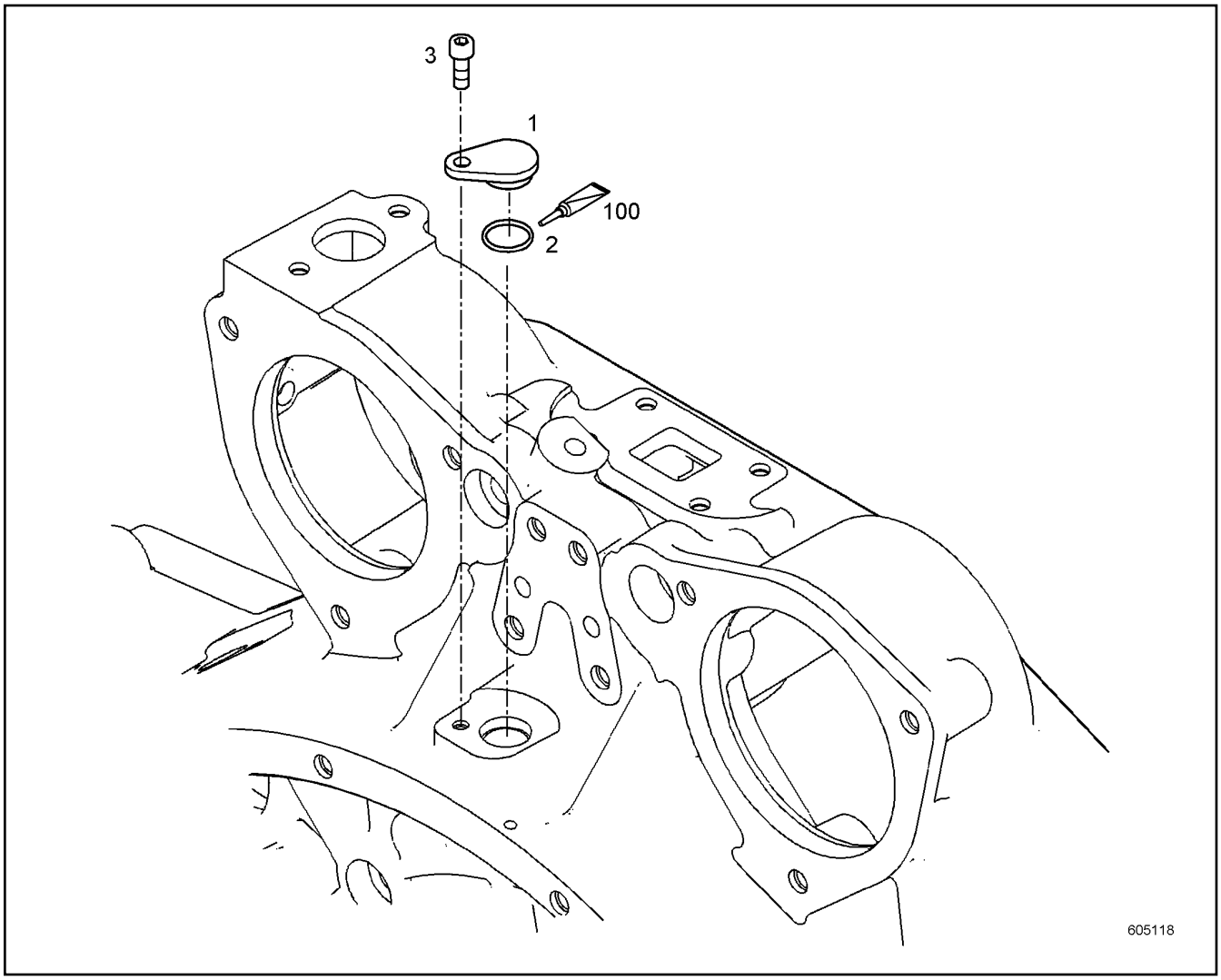

Pos.	Item	Quantity	Description	Bezeichnung	Serie	K
1	10127967	1	COVER	DECKEL		
2	7381103	1	O-RING	O-RING		
3	404250914	1	SOCKET HEAD SCREW ISO 4762 M6X16 A4-7	ZYLINDERSCHRAUBE		
100	10282622	1	GREASE	FETT		

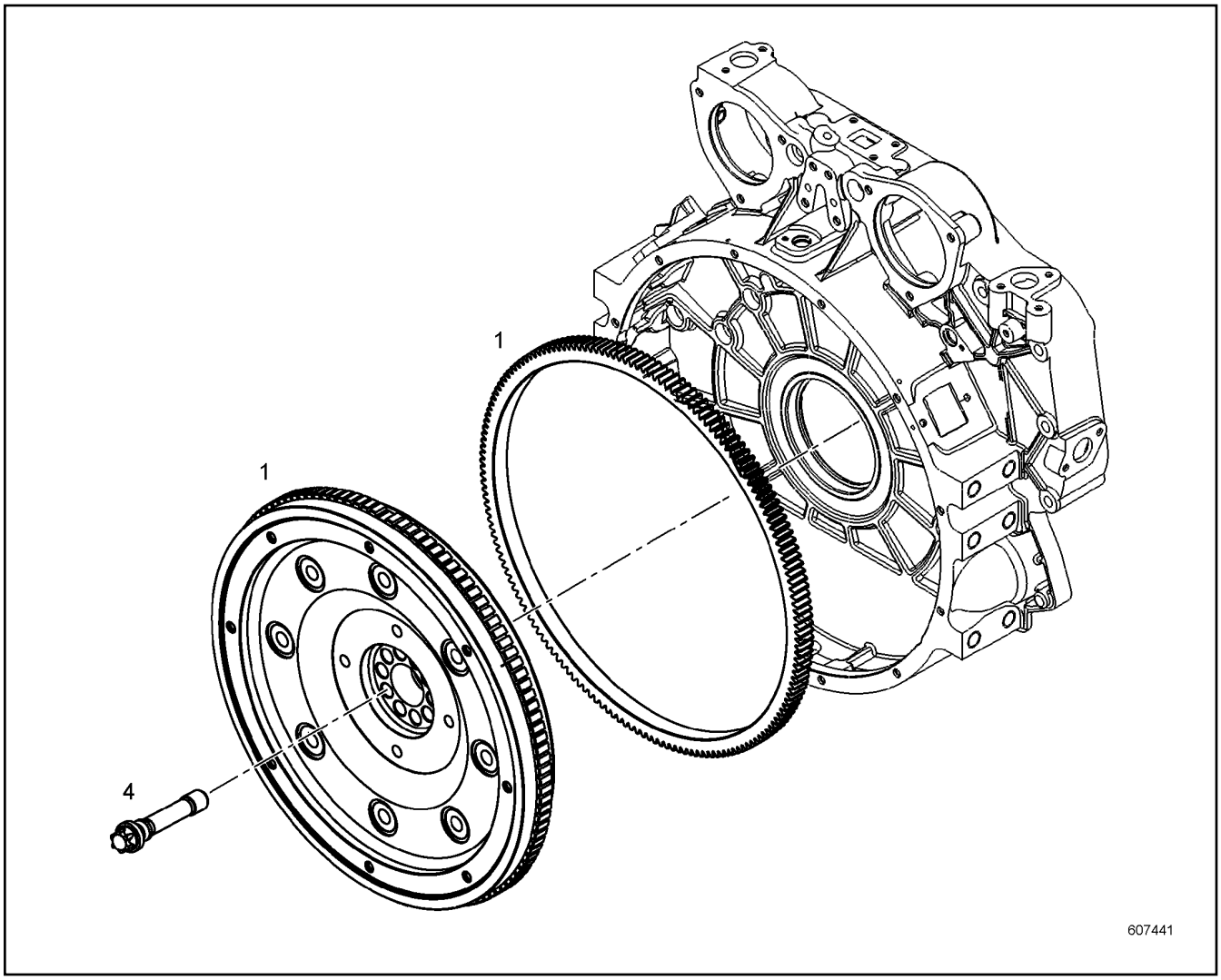

Pos.	Item	Quantity	Description	Bezeichnung	Serie	K
1	10118928	1	FLYWHEEL PRE-ASS.	SCHWUNGRAD VORM.		
4	10118912	10	HEXALOBULAR HEAD SCREW M16X147 10.9	SECHSRUNDSCHRAUBE		

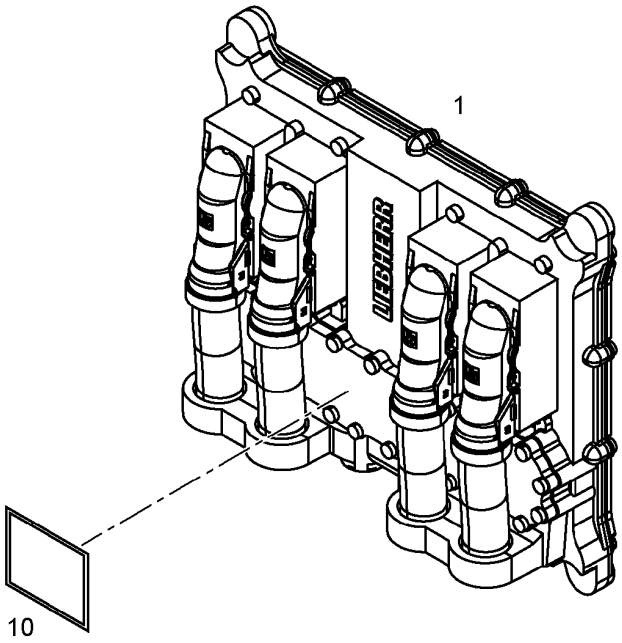

Pos.	Item	Quantity	Description	Bezeichnung	Serie	K
1	10883842	1	MOTOR CONTROL DEVICE	MOTORSTEUERGERAET		

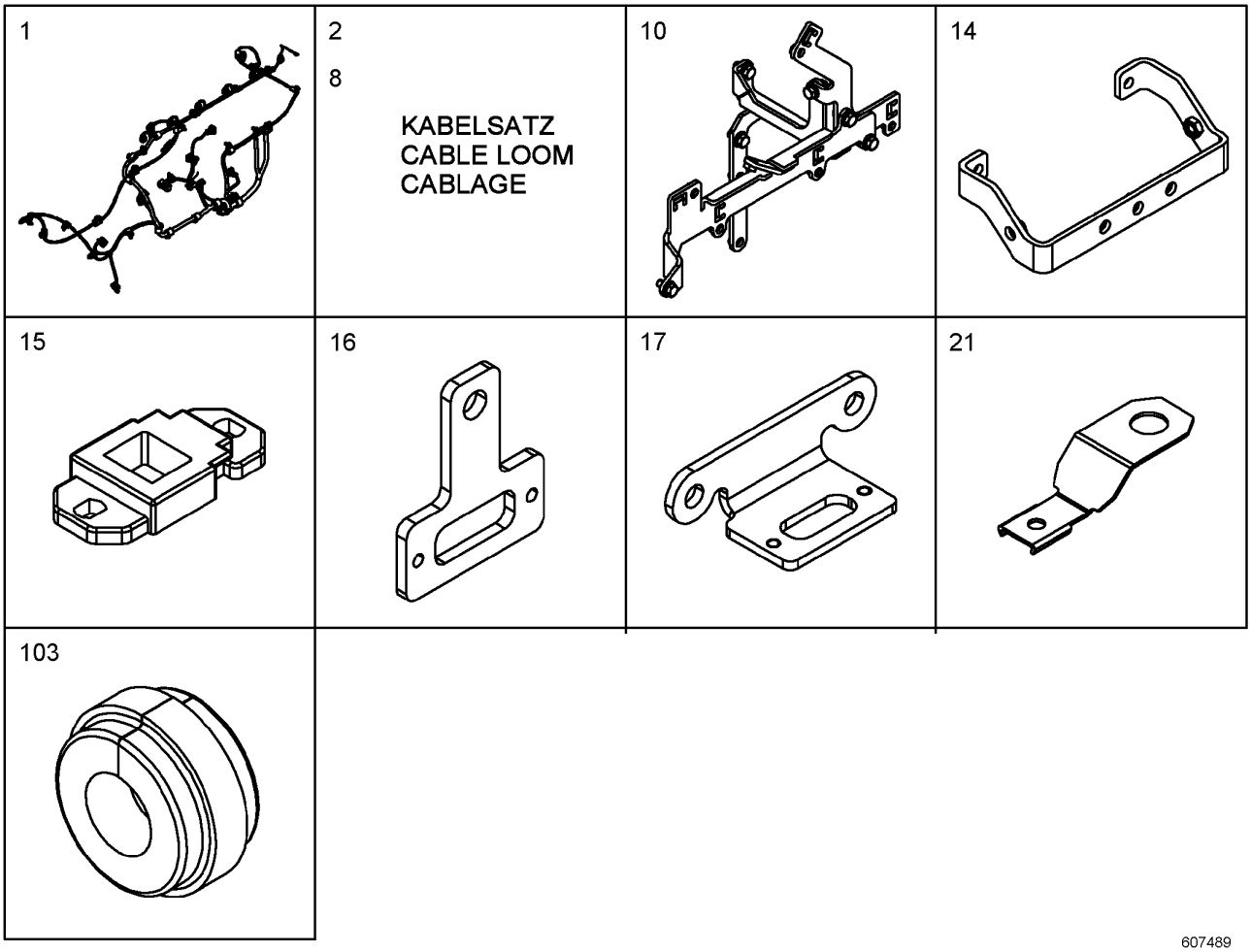

Pos.	Item	Quantity	Description	Bezeichnung	Serie	K
1	10145895	1	CABLE HARNESS	KABELBAUM		
2	10150287	1	WIRING HARNESS ASSEMBLY	KABELSATZ ANBAU		
8	10135553	1	WIRING HARNESS ASSEMBLY ⇨ ❑ 249	KABELSATZ ANBAU		
10	10146587	1	CLAMP - ADD-ON UNIT	HALTER ANBAU		
14	10133758	1	HOLDER	HALTER		
15	11007215	1	HOLDER	HALTER		
16	10136834	1	HOLDER	HALTER		
17	10132619	1	HOLDER	HALTER		
21	10041876	1	HOLDER	HALTER		
103	10123876	2	RUBBER RING	GUMMIRING		

OHNE BILD
WITHOUT ILLUSTRATION
SANS PLANCHE
SIN FIG.
SEM ILUSTRAÇÃO
БЕЗ ИЗОБРАЖЕНИЯ

600000

Pos.	Item	Quantity	Description	Bezeichnung	Serie	K
1	11100081	1	CABLE LOOM	KABELSATZ		
46	10030518	1	HEX SCREW EN 1665 M10X20 8.8	SECHSKANTSCHRAUBE		

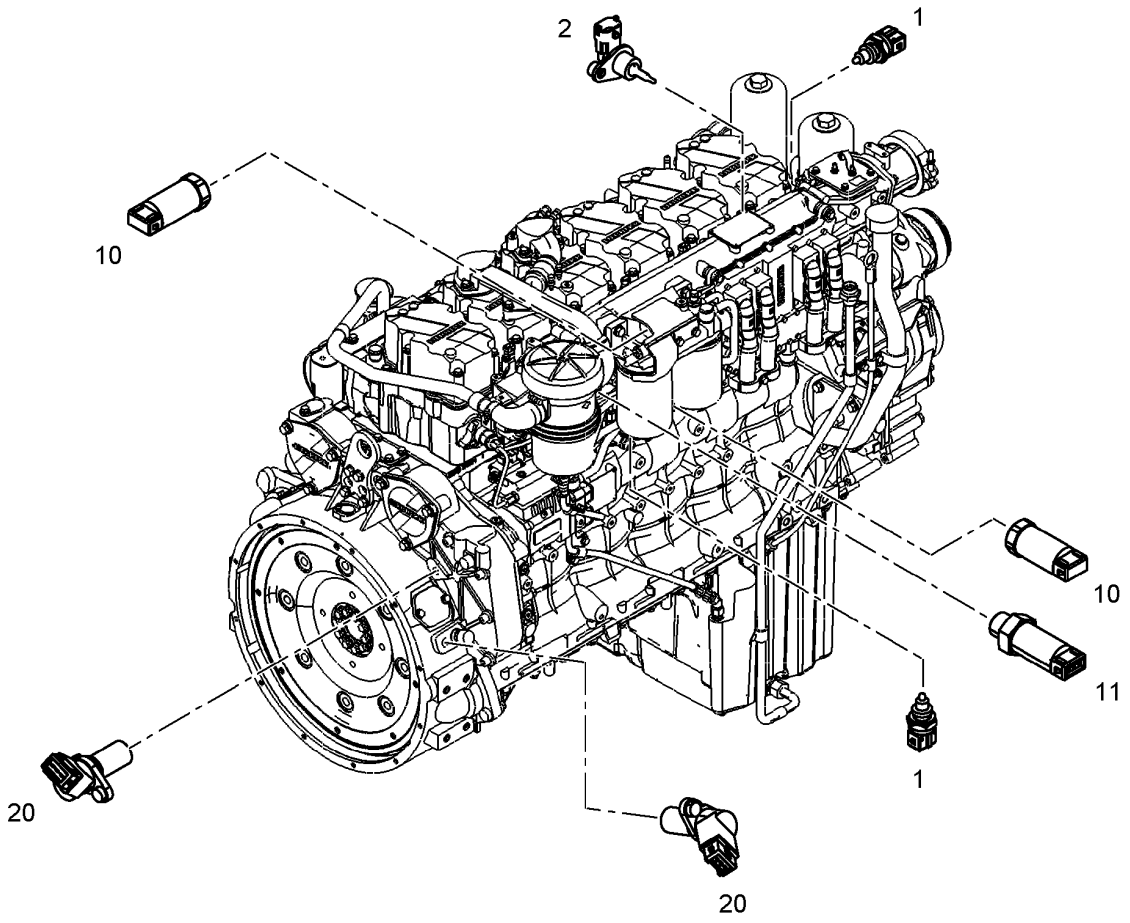

Pos.	Item	Quantity	Description	Bezeichnung	Serie	K
1	10493626	2	TEMP SENSOR	TEMP FUEHLER		
2	10152036	1	TEMPERATURE PROBE CPL.	TEMPERATURFUEHLER KPL.		
10	9076531	2	PRESSURE TRANSMITTER	DRUCKGEBER		
11	9076550	1	PRESSURE TRANSMITTER CPL.	DRUCKGEBER KPL.		
20	10133077	2	ROTATIONAL SPEED SENSOR CPL. ⇨ ❑ 251	DREHZAHLGEBER KPL.		

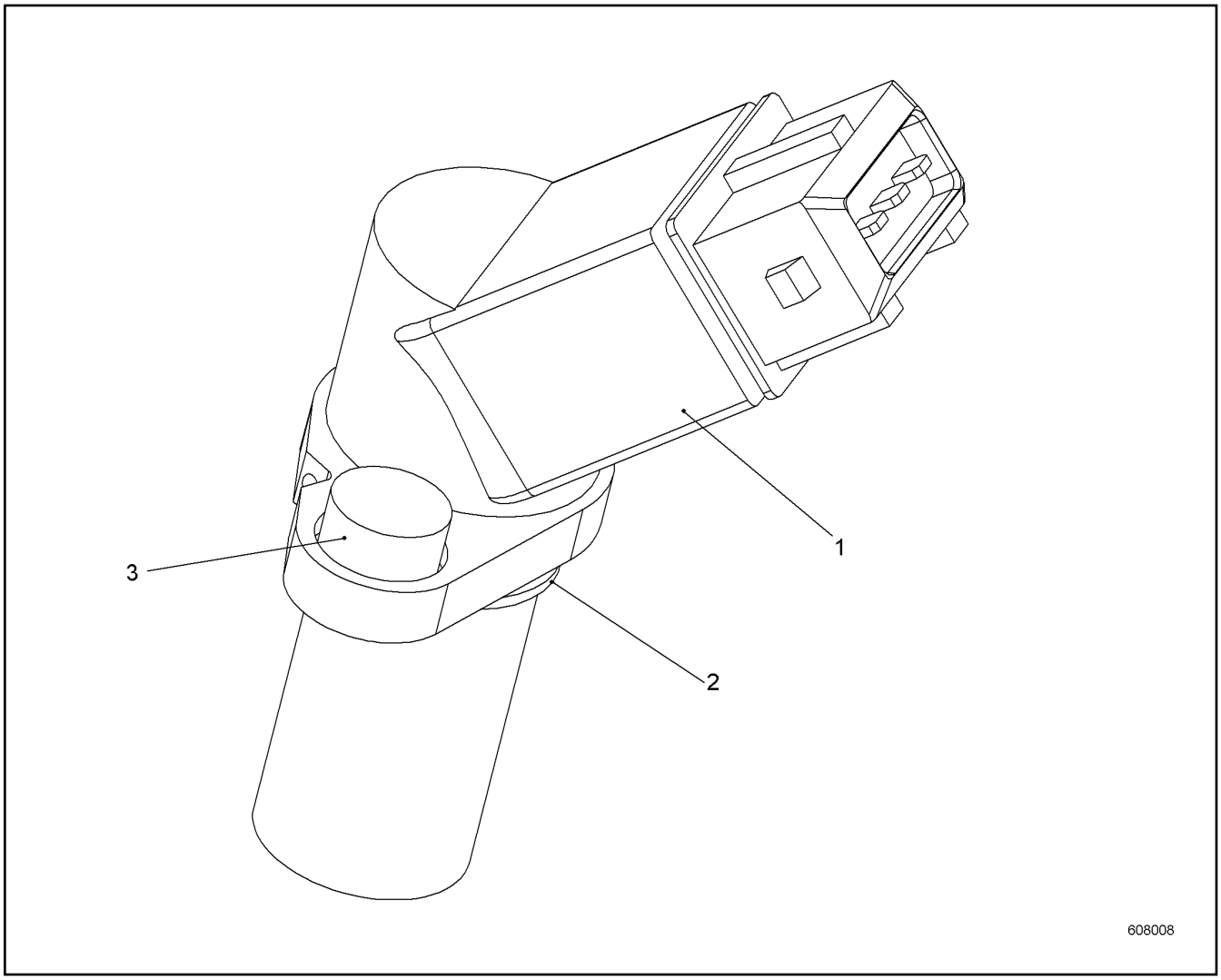

Pos.	Item	Quantity	Description	Bezeichnung	Serie	K
1	10800265	1	ROTATIONAL SPEED SENSOR	DREHZAHLGEBER		
2	7381103	1	O-RING	O-RING		
3	404250914	1	SOCKET HEAD SCREW ISO 4762 M6X16 A4-7	ZYLINDERSCHRAUBE		

OHNE BILD
WITHOUT ILLUSTRATION
SANS PLANCHE
SIN FIG.
SEM ILUSTRAÇÃO
БЕЗ ИЗОБРАЖЕНИЯ

600000

Pos.	Item	Quantity	Description	Bezeichnung	Serie	K
1	10122317	1	COVER	DECKEL		
2	7380657	1	O-RING	O-RING		
3	10336008	3	HEX SCREW DIN 6921 M10X25 8.8	SECHSKANTSCHRAUBE		
4	7381638	1	SCREW PLUG	VERSCHLUSSSCHRAUBE		
5	7382203	2	SCREW PLUG	VERSCHLUSSSCHRAUBE		
100	10285708	1	GREASE	FETT		

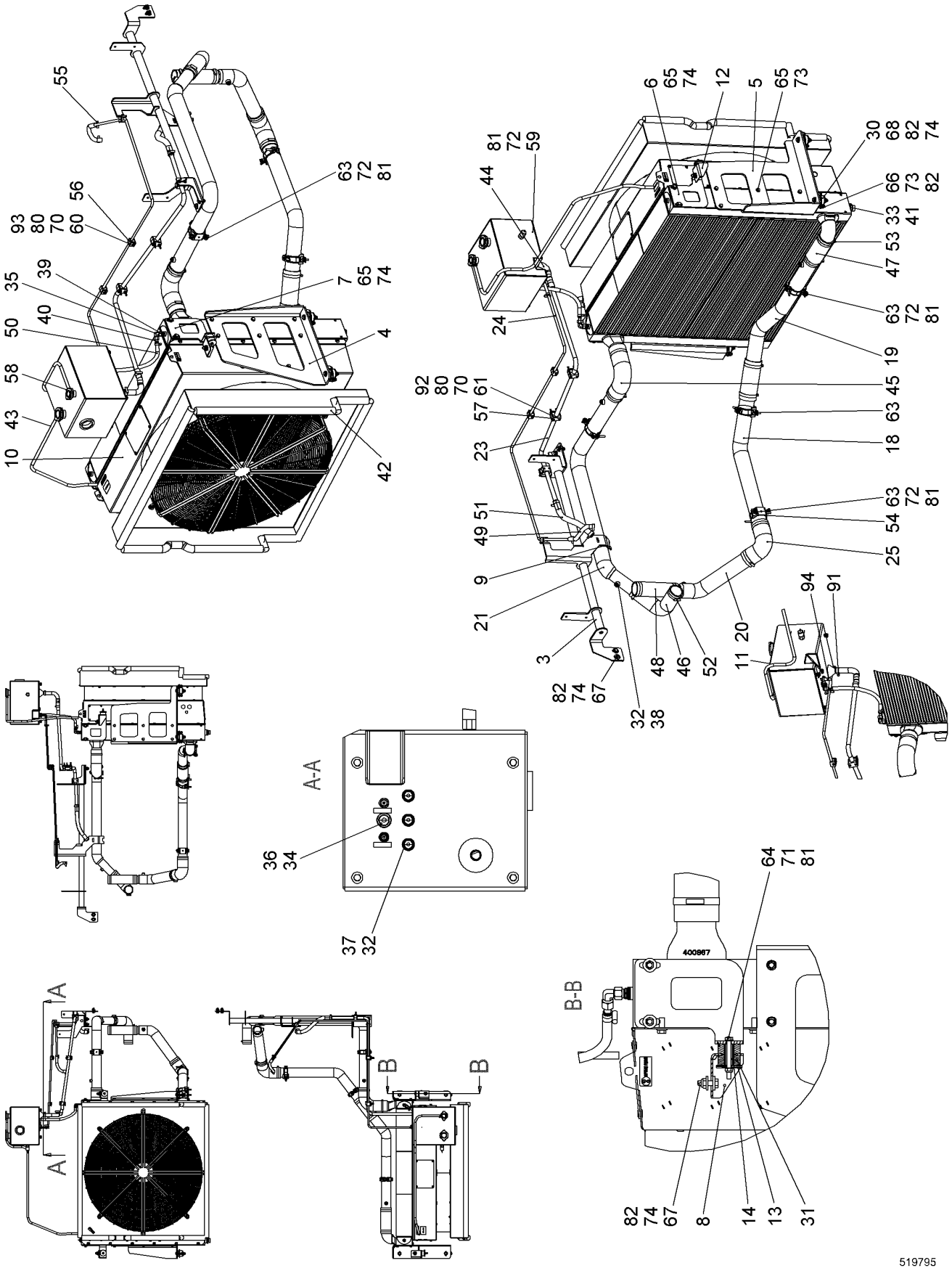

8.7.2015 519795 LIEBHERR	**138281_ETK_001** **COOLER INSTALLATION WATER** **KUEHLER EINBAU WASSER**	❑ 253 (1/3) **11 24 114 0**

Pos.	Item	Quantity	Description	Bezeichnung	Serie	K
3	11250382	1	HOLDER	HALTER		
4	10575306	1	WP	WP		
5	10575307	1	WP	WP		
6	10599757	1	WP	WP		
7	10599758	1	WP	WP		
8	10599759	1	WP	WP		
9	11269800	1	RUBBER	GUMMI		
10	10574237	1	COOLER MOTOR ⇨ ❑ 256	KUEHLER MOTOR		
11	11287347	1	EQUALIZING RESERVOIR ⇨ ❑ 259	AUSGLEICHSBEHAELTER		
12	10556597	1	HOLDER	HALTER		
13	10567619	2	WASHER 53/10X5 AISI 316	SCHEIBE		
14	10571340	2	SLEEVE 20/13.5X44 AISI 316	HUELSE		
18	11287692	1	COOLING WATER PIPE	KUEHLWASSERROHR		
19	11269259	1	COOLING WATER PIPE	KUEHLWASSERROHR		
20	11250555	1	COOLING WATER PIPE	KUEHLWASSERROHR		
21	11250556	1	COOLING WATER PIPE	KUEHLWASSERROHR		
23	11250564	1	TUBE	ROHR		
24	11287715	1	TUBE	ROHR		
25	11287796	1	FORM HOSE	FORMSCHLAUCH		
30	726613614	4	RUBBER MOUNT	LAGER GUMMI		
31	10567622	4	BUFFER	PUFFER		
32	4900262	7	SEALING RING	DICHTRING		
33	7101022	1	SEALING RING	DICHTRING		
34	710103714	1	SEALING RING	DICHTRING		
35	247117702	1	FLANGE JOINT	VERSCHRAUBUNG		
36	470905214	1	FLANGE JOINT	VERSCHRAUBUNG		
37	470905714	3	FLANGE JOINT	VERSCHRAUBUNG		
38	477704914	4	FLANGE JOINT	VERSCHRAUBUNG		
39	476608008	1	FLANGE JOINT	VERSCHRAUBUNG		
40	511713914	1	HOSE UNION	SCHLAUCHSTUTZEN		
41	403900714	1	OIL DRAIN PLUG G1"X11 MS	OELABLASSSCHRAUBE		
42	7014524	5	CLAMPING PROFILE	KLEMMPROFIL		
43	510559314	2.5	HOSE	SCHLAUCH		
44	11270026	1	FORM HOSE	FORMSCHLAUCH		
45	10337090	1	FORM HOSE	FORMSCHLAUCH		
46	10350439	1	FORM HOSE	FORMSCHLAUCH		
47	11656331	1	COOLING WATER HOSE	KUEHLWASSERSCHLAUCH		
48	11621777	1	COOLING WATER HOSE	KUEHLWASSERSCHLAUCH		
49	11621769	1	COOLING WATER HOSE	KUEHLWASSERSCHLAUCH		
50	11621769	1	COOLING WATER HOSE	KUEHLWASSERSCHLAUCH		
51	11621772	1	COOLING WATER HOSE	KUEHLWASSERSCHLAUCH		
52	774206408	4	HOSE CLAMP	SCHLAUCHSCHELLE		
53	774218808	9	HOSE CLAMP	SCHLAUCHSCHELLE		
54	774255714	4	CLAMP	SCHELLE		
55	774204914	6	HOSE CLAMP	SCHLAUCHSCHELLE		
56	7365090	6	CLAMP-HALF	KLEMMHAELFTE		
57	602008508	6	CLAMP-HALF	KLEMMHAELFTE		
58	10581765	1	HOSE CLAMP	SCHLAUCHSCHELLE		
59	406501514	6	HEX SCREW ISO 4017 M8X16 A4-70	SECHSKANTSCHRAUBE		
60	404251014	3	SOCKET HEAD SCREW ISO 4762 M6X35 A4-7	ZYLINDERSCHRAUBE		
61	404251414	6	SOCKET HEAD SCREW ISO 4762 M6X60 A4-7	ZYLINDERSCHRAUBE		
63	406501314	8	HEX SCREW ISO 4017 M8X30 A4-70	SECHSKANTSCHRAUBE		
64	10538809	2	HEX SCREW ISO 4017 M8X80 A4-70	SECHSKANTSCHRAUBE		
65	406511914	16	HEX SCREW ISO 4017 M10X25 A4-70	SECHSKANTSCHRAUBE		
66	406511614	8	HEX SCREW ISO 4017 M10X30 A4-70	SECHSKANTSCHRAUBE		
67	406509314	6	HEX SCREW ISO 4017 M10X35 A4-70	SECHSKANTSCHRAUBE		
68	406527914	4	HEX SCREW ISO 4017 M10X80 A4-70	SECHSKANTSCHRAUBE		
70	4000648	9	WASHER DIN 7349 6.4	SCHEIBE		

Pos.	Item	Quantity	Description	Bezeichnung	Serie	K
71	420001014	6	WASHER ISO 7089 8 A4	SCHEIBE		
72	421300514	20	WASHER DIN 6340 8.4 C35	SCHEIBE		
73	420001114	28	WASHER ISO 7089 10 A4	SCHEIBE		
74	421300214	24	WASHER DIN 6340 10.5 C35	SCHEIBE		
80	10540492	9	HEX NUT ISO 10511 M6 A4	SECHSKANTMUTTER		
81	10540493	12	HEX NUT ISO 10511 M8 A4	SECHSKANTMUTTER		
82	10540494	18	HEX NUT ISO 10511 M10 A4	SECHSKANTMUTTER		
91	4900778	4	HOSE CLAMP	SCHLAUCHSCHELLE		
92	7005053	3	LID PLATE	DECKPLATTE		
93	602025814	3	LID PLATE	DECKPLATTE		
94	550936214	1	FORM HOSE	FORMSCHLAUCH		

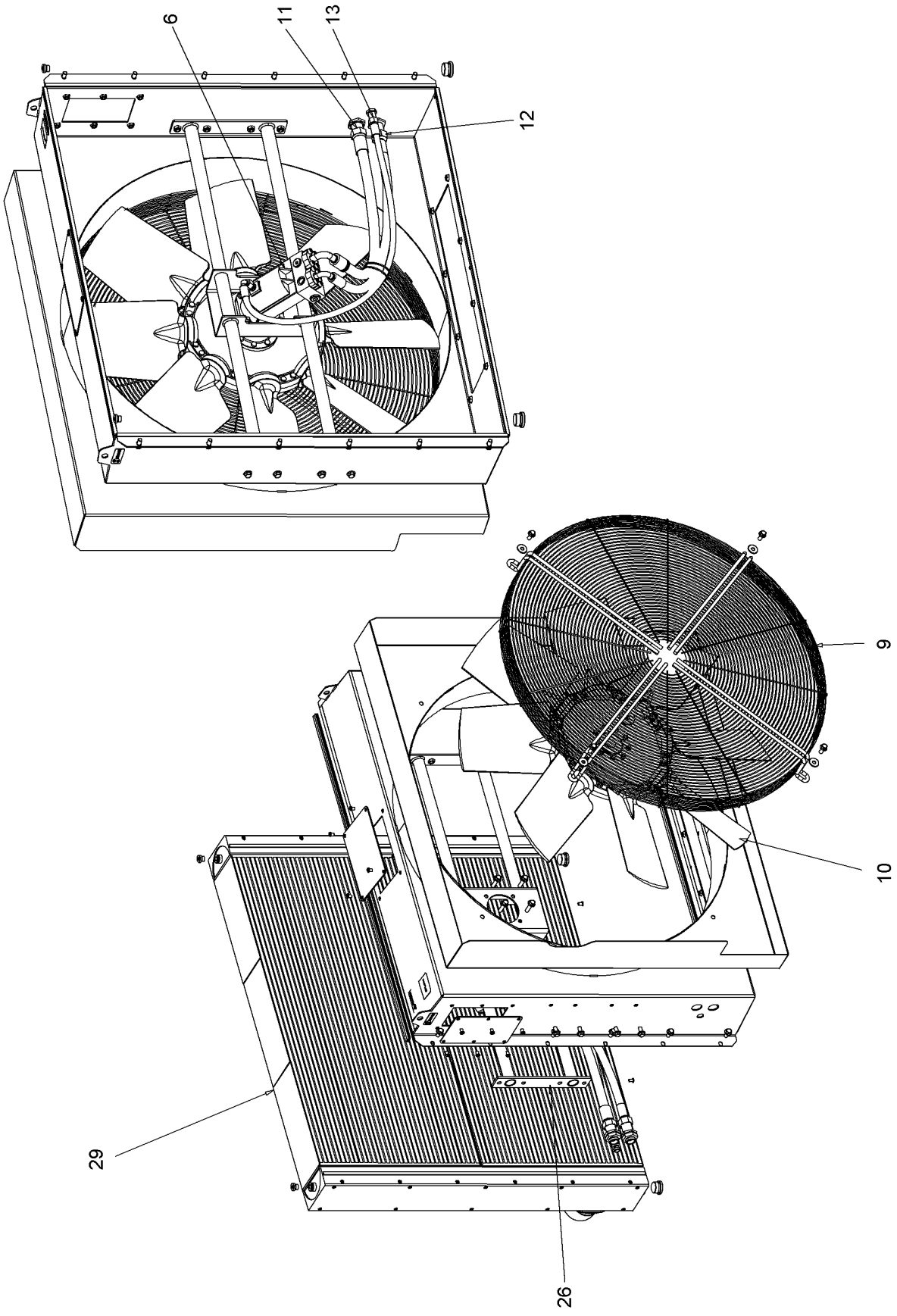
6
11
13
12
9
10
29
26
607278

Pos.	Item	Quantity	Description	Bezeichnung	Serie	K
6	512250114	1	OIL MOTOR ⇨ ❑ 258	OELMOTOR		
9	11267554	1	GUARD	SCHUTZGITTER		
10	11267555	1	FAN	LUEFTER		
11	11267556	1	HOSE	SCHLAUCH		
12	11267557	1	HOSE	SCHLAUCH		
13	11267558	1	HOSE	SCHLAUCH		
26	11267559	1	MOTOR HOLDER	MOTORHALTER		
29	11267560	1	COOLER	KUEHLER		

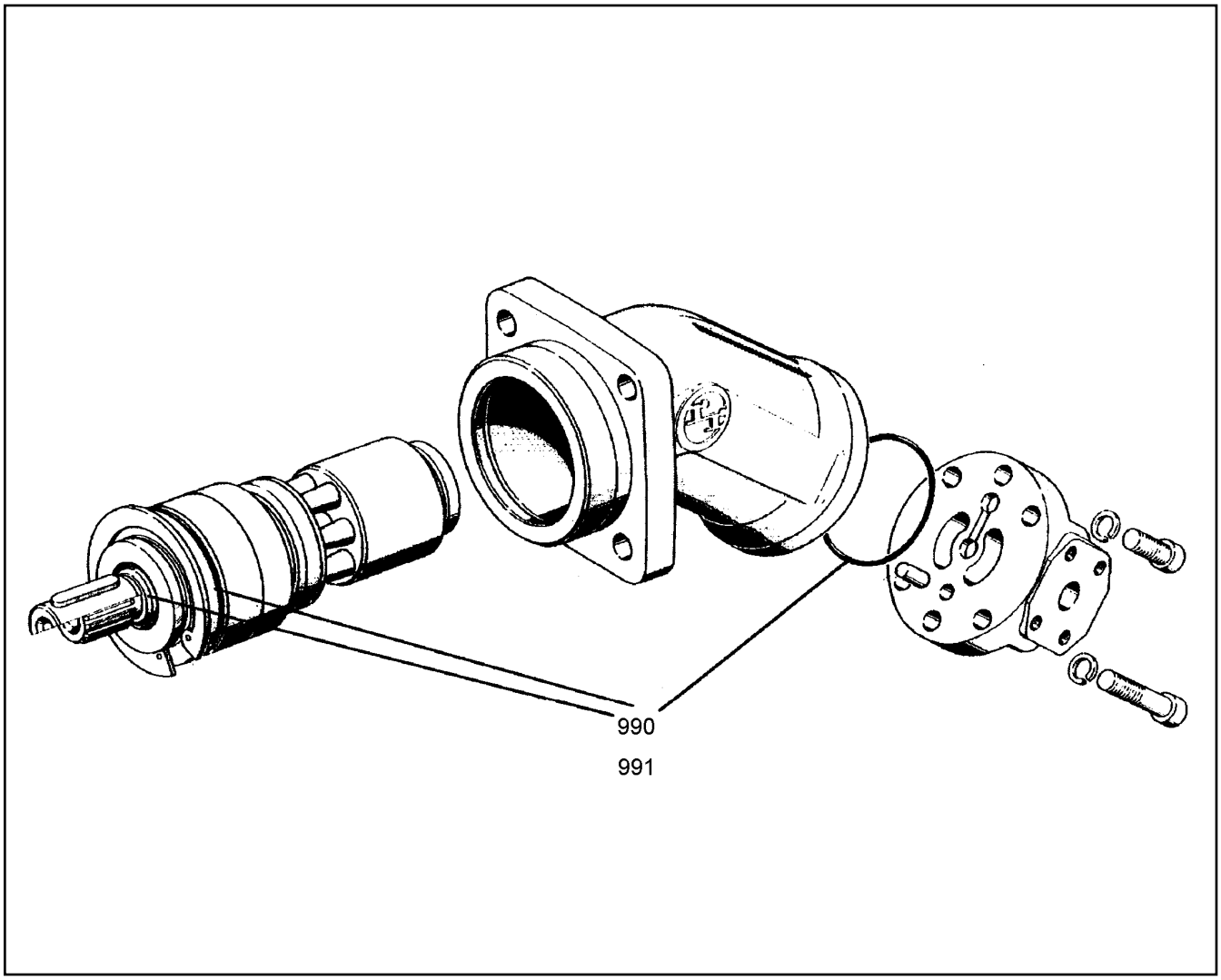

Pos.	Item	Quantity	Description	Bezeichnung	Serie	K
990	502050814	1	SEALING SET CPL	DS KPL		

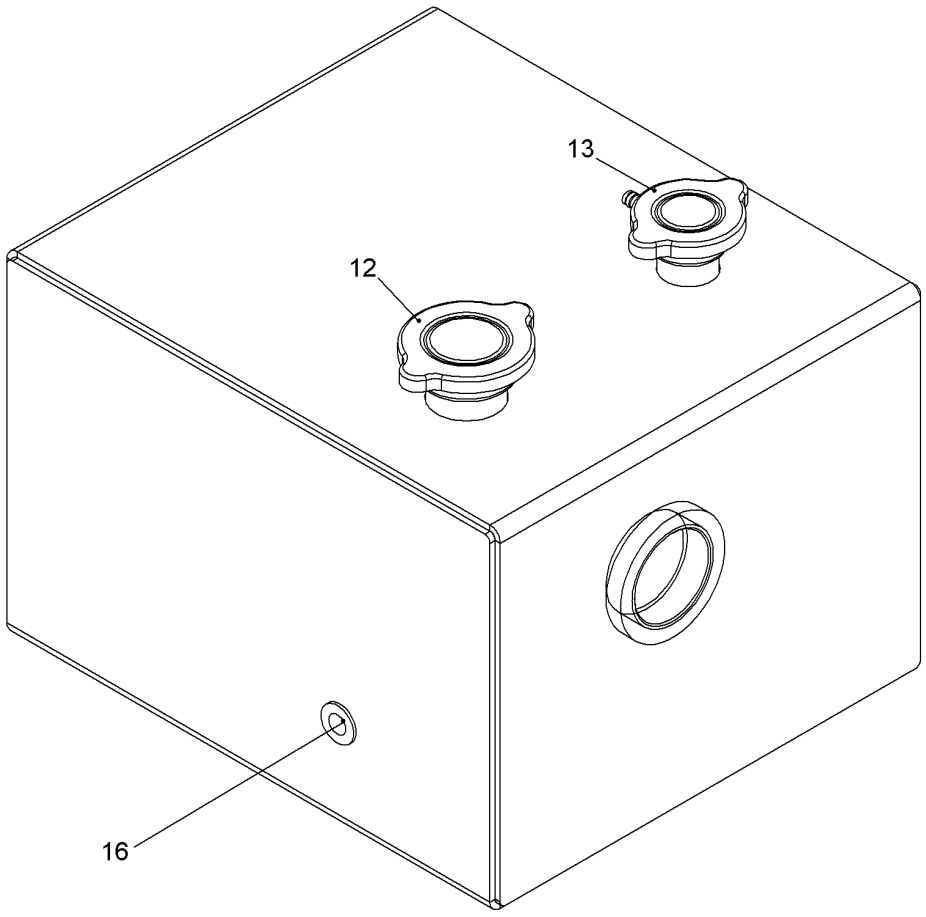

Pos.	Item	Quantity	Description	Bezeichnung	Serie	K
12	11241269	1	END COVER	VERSCHLUSSDECKEL		
13	10599796	1	END COVER	VERSCHLUSSDECKEL		
16	11287761	1	OIL LEVEL SIGHT GLASS	OELSCHAUGLAS		

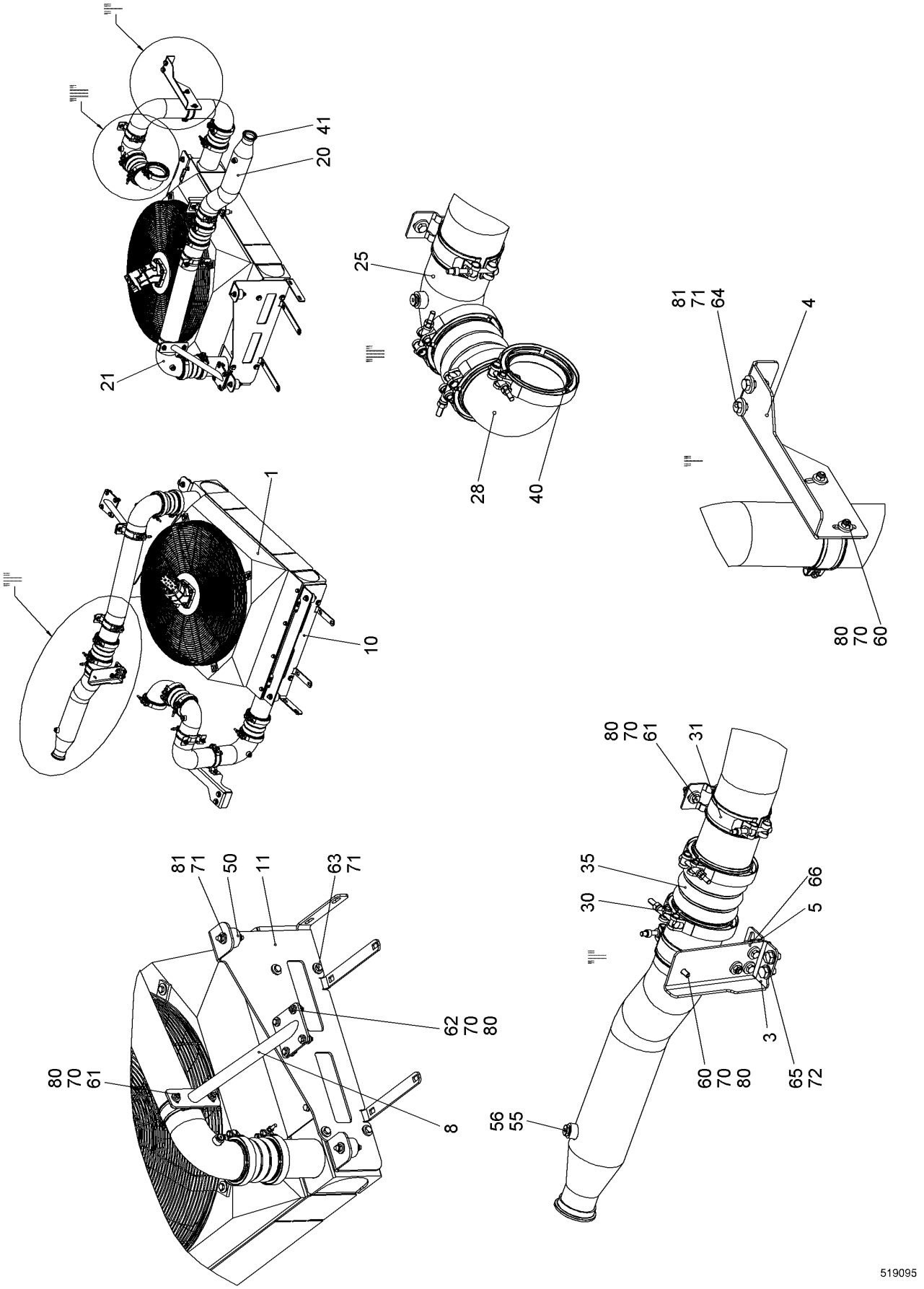

8.7.2015 519095 LIEBHERR	**138281_ETK_001** **COOLER INSTALLATION CHARGE AIR** **KUEHLER EINBAU LADELUFT**	260 (1/2) **11 24 114 1**

Pos.	Item	Quantity	Description	Bezeichnung	Serie	K
1	10574239	1	COOLER MOTOR	KUEHLER MOTOR		
3	11285747	1	WP ⇨ ❑ 262	WP		
5	11276612	1	SLEEVE 14/25X26 S235JRH;EN 10210-1	HUELSE		
8	11251056	1	HOLDER	HALTER		
10	10575566	1	WP	WP		
11	10575567	1	WP	WP		
20	11250430	1	CHARGE AIR PIPE	LADELUFTROHR		
21	11250438	1	CHARGE AIR PIPE	LADELUFTROHR		
25	11250439	1	CHARGE AIR PIPE	LADELUFTROHR		
28	10562107	1	CHARGE AIR PIPE	LADELUFTROHR		
30	10127984	9	RETAINER CLIP	SPANNSCHELLE		
31	10513605	5	CLAMP	SCHELLE		
35	10521397	4	CHARGE AIR CORRUGATED HOSE	LADELUFTWELLSCHLAUCH		
40	7380605	1	O-RING	O-RING		
41	7380970	1	O-RING	O-RING		
50	726612114	4	RUBBER MOUNT	LAGER GUMMI		
55	10598295	4	SCREW PLUG	VERSCHLUSSSCHRAUBE		
56	710102514	4	SEALING RING	DICHTRING		
60	406501414	4	HEX SCREW ISO 4017 M8X25 A4-70	SECHSKANTSCHRAUBE		
61	406501314	6	HEX SCREW ISO 4017 M8X30 A4-70	SECHSKANTSCHRAUBE		
62	406517614	4	HEX SCREW ISO 4017 M8X35 A4-70	SECHSKANTSCHRAUBE		
63	406511914	8	HEX SCREW ISO 4017 M10X25 A4-70	SECHSKANTSCHRAUBE		
64	406509314	2	HEX SCREW ISO 4017 M10X35 A4-70	SECHSKANTSCHRAUBE		
65	406517714	2	HEX SCREW ISO 4017 M12X20 A4-70	SECHSKANTSCHRAUBE		
66	406512614	1	HEX SCREW ISO 4017 M12X50 A4-70	SECHSKANTSCHRAUBE		
70	421300514	28	WASHER DIN 6340 8.4 C35	SCHEIBE		
71	421300214	22	WASHER DIN 6340 10.5 C35	SCHEIBE		
72	420001514	3	WASHER ISO 7089 12 A4	SCHEIBE		
80	10540493	14	HEX NUT ISO 10511 M8 A4	SECHSKANTMUTTER		
81	10540494	10	HEX NUT ISO 10511 M10 A4	SECHSKANTMUTTER		

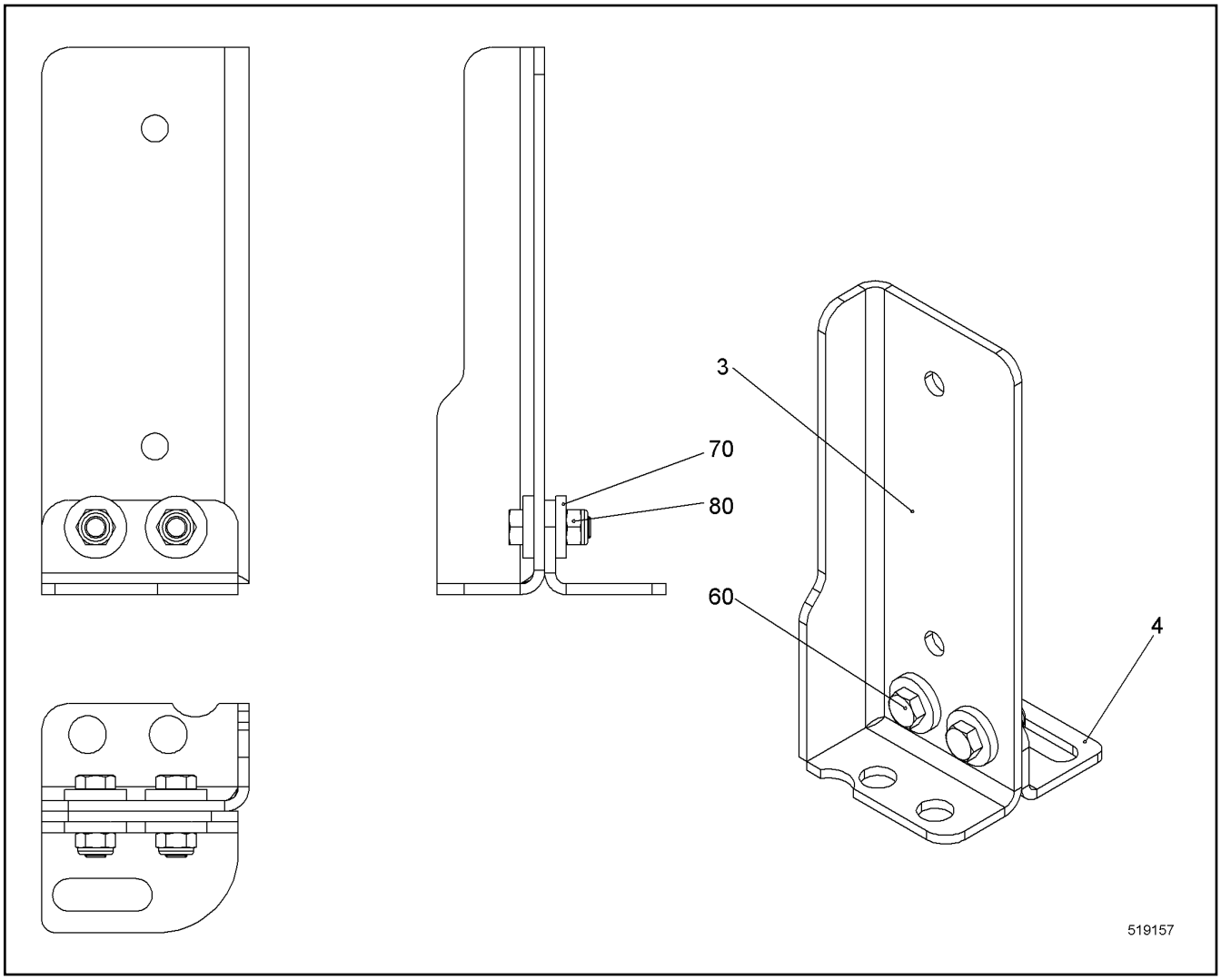

Pos.	Item	Quantity	Description	Bezeichnung	Serie	K
3	11250985	1	WP	WP		
4	11285709	1	WP	WP		
60	406501414	2	HEX SCREW ISO 4017 M8X25 A4-70	SECHSKANTSCHRAUBE		
70	421300514	4	WASHER DIN 6340 8.4 C35	SCHEIBE		
80	10540493	2	HEX NUT ISO 10511 M8 A4	SECHSKANTMUTTER		

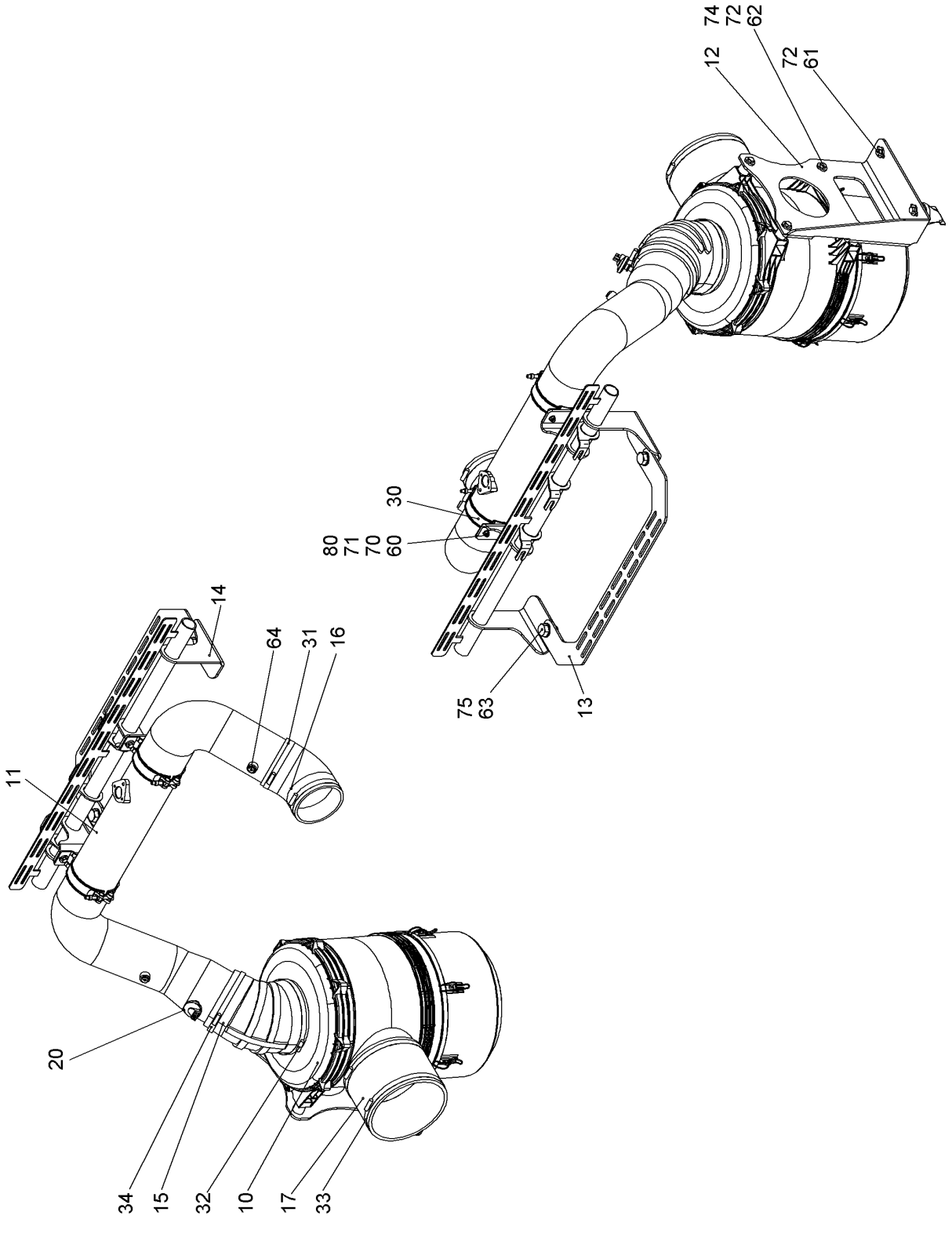
74
72
62
12
72
61
30
80
71
70
60
75
63
13
14
64
31
16
11
20
34
15
32
10
17
33
519096

Pos.	Item	Quantity	Description	Bezeichnung	Serie	K
10	11246790	1	AIR FILTER ⇨ ❑ 265	LUFTFILTER		
11	11247162	1	SUCTION PIPE AIR	ANSAUGROHR LUFT		
12	11247208	1	CONSOLE	KONSOLE		
13	11215385	1	CONSOLE	KONSOLE		
14	11247880	1	HOLDER ST.CONST.	HALTER SCHWK		
15	11246836	1	ELBOW	KRUEMMER		
16	550900914	1	ELBOW	KRUEMMER		
17	10352453	1	HOSE	SCHLAUCH		
20	11060522	1	MAINTANANCE SWITCH	WARTUNGSSCHALTER		
30	11229805	2	CLAMP	SCHELLE		
31	774209908	2	HOSE CLAMP	SCHLAUCHSCHELLE		
32	774241914	1	HOSE CLAMP	SCHLAUCHSCHELLE		
33	774247214	2	HOSE CLAMP	SCHLAUCHSCHELLE		
34	774217108	1	HOSE CLAMP	SCHLAUCHSCHELLE		
60	406501414	4	HEX SCREW ISO 4017 M8X25 A4-70	SECHSKANTSCHRAUBE		
61	406518714	2	HEX SCREW ISO 4017 M10X20 A4-70	SECHSKANTSCHRAUBE		
62	10538823	4	HEX SCREW ISO 4017 M10X65 A4-70	SECHSKANTSCHRAUBE		
63	10543919	2	HEX SCREW ISO 4017 M20X35 10.9	SECHSKANTSCHRAUBE		
64	477704914	2	FLANGE JOINT	VERSCHRAUBUNG		
70	420001014	4	WASHER ISO 7089 8 A4	SCHEIBE		
71	421300514	4	WASHER DIN 6340 8.4 C35	SCHEIBE		
72	421300214	6	WASHER DIN 6340 10.5 C35	SCHEIBE		
74	10519789	4	WASHER 12/30X30 S355J2;EN 10025-2	SCHEIBE		
75	10544174	2	WASHER ISO 7089 20	SCHEIBE		
80	10540493	4	HEX NUT ISO 10511 M8 A4	SECHSKANTMUTTER		

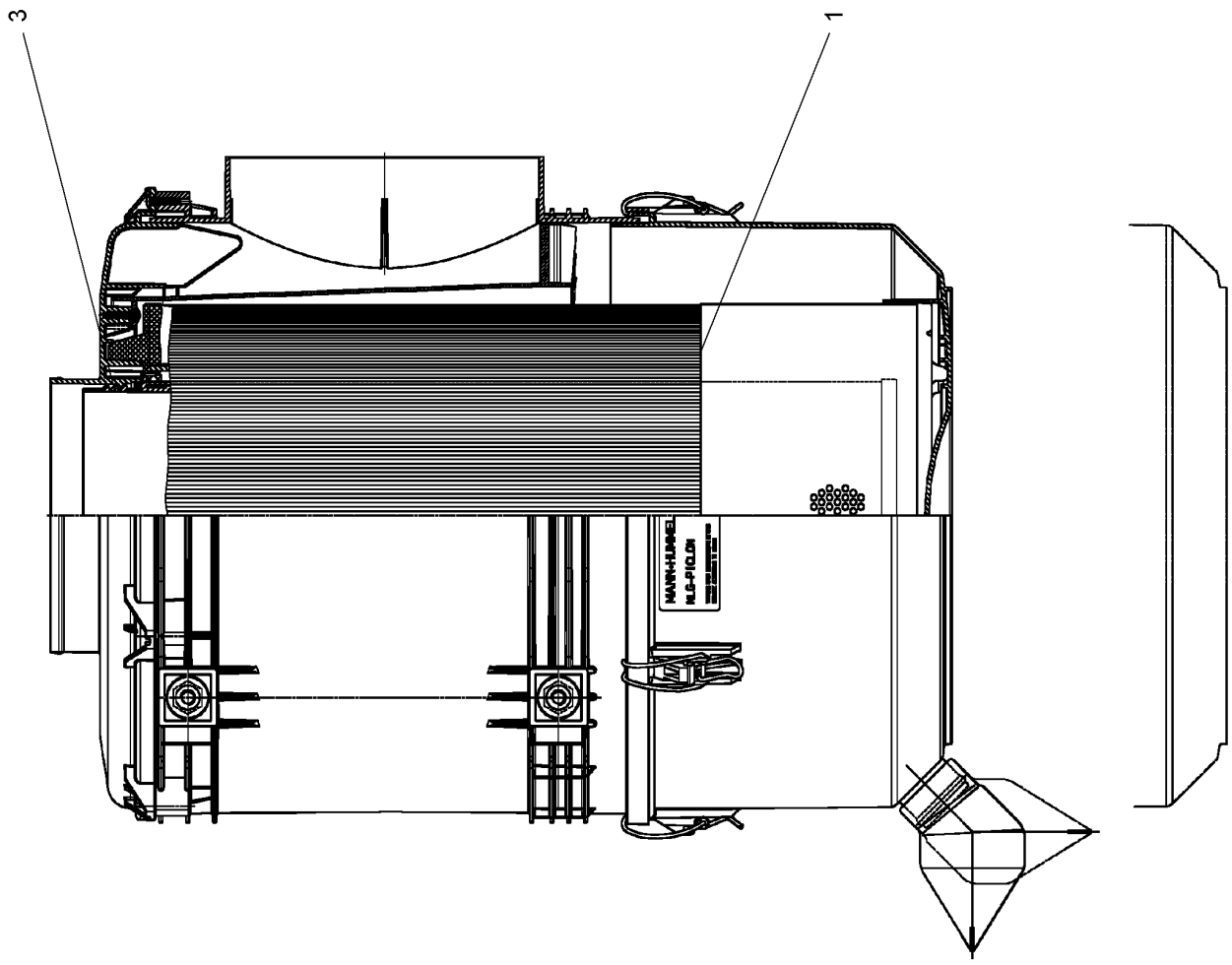

608021

Pos.	Item	Quantity	Description	Bezeichnung	Serie	K
1	11291031	1	FILTER ELEMENT	FILTERELEMENT		
3	11291030	1	SAFETY ELEMENT	SICHERHEITSELEMENT		

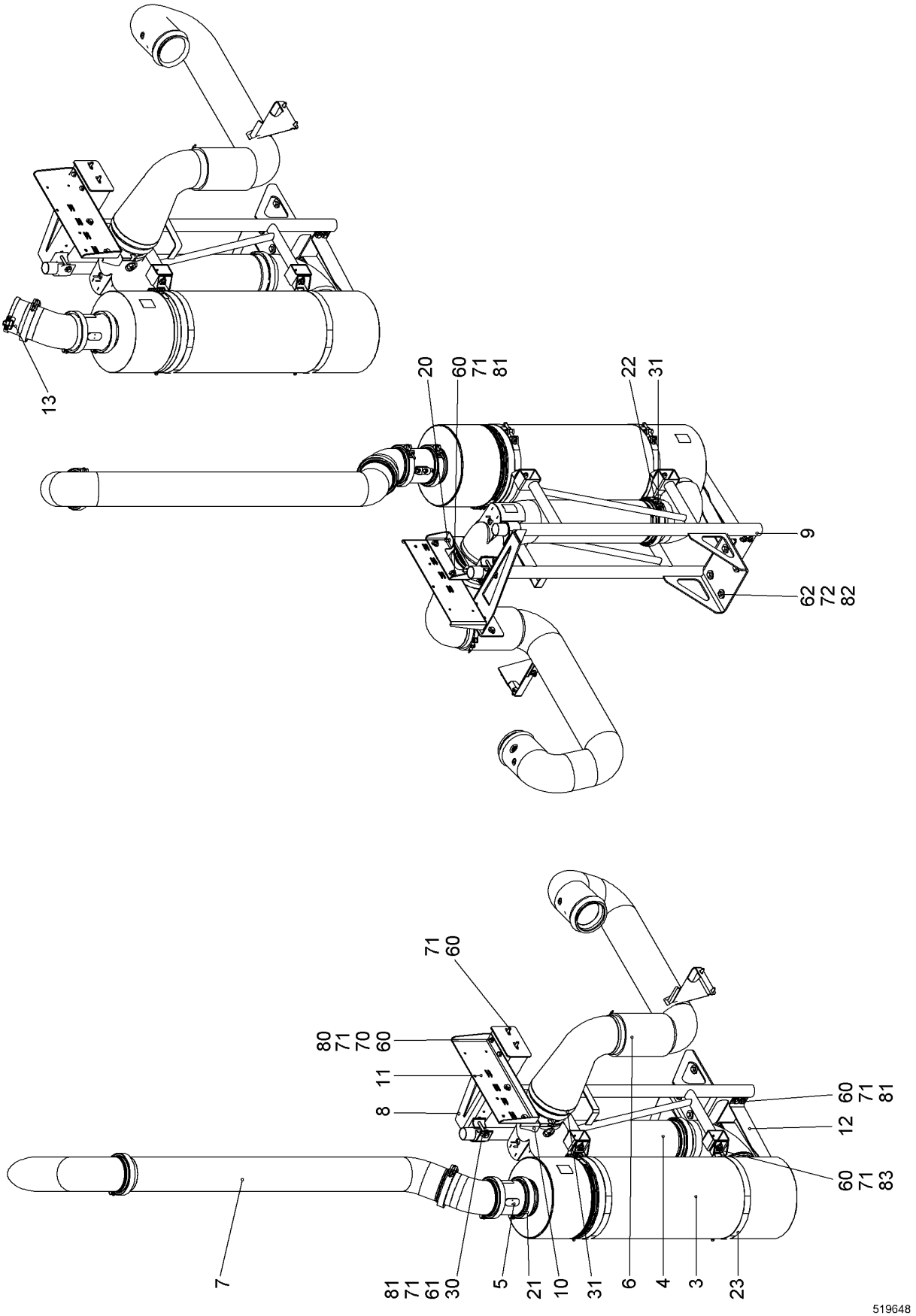
13
20
60
71
81
22
31
9
62
72
82
71
60
80
71
70
60
11
8
60
71
81
12
60
71
83
7
81
71
61
30
5
21
10
31
6
4
3
23
519648

Pos.	Item	Quantity	Description	Bezeichnung	Serie	K
3	10144049	1	SCR CPL. ⇨ ❑ 269	SCR KPL.		
4	10148669	1	EXHAUST MIXING PIPE	ABGASMISCHROHR		
5	10144086	1	MIXER	MISCHER		
6	11248166	1	FLUE GAS PIPE CPL	ABGASROHR KPL		
7	11248175	1	EXHAUST TAIL PIPE	ABGASENDROHR		
8	11247607	1	CONSOLE	KONSOLE		
9	11247464	1	CONSOLE	KONSOLE		
10	11248432	1	WP	WP		
11	11248433	1	WP	WP		
12	11248460	1	BRACKET	BUEGEL		
13	11299163	1	EXHAUST FLAP	AUSPUFFKLAPPE		
14	11308593	1	BRACKET	BUEGEL		
15	11308594	1	BRACKET	BUEGEL		
20	10144699	1	BOW-TYPE CLAMP	BUEGELSCHELLE		
21	10494116	4	PROFIL CLAMP	PROFILSCHELLE		
22	10494117	2	PROFIL CLAMP	PROFILSCHELLE		
23	10355006	2	SWIVEL BOLT BRACKET CLAMP	GELENKBANDKONSOLENSCHE		
30	979896808	2	CLAMPING RING	KLEMMRING		
31	10144102	2	SEAL	DICHTUNG		
60	406511614	14	HEX SCREW ISO 4017 M10X30 A4-70	SECHSKANTSCHRAUBE		
61	10538824	2	HEX SCREW ISO 4017 M10X110 A4-70	SECHSKANTSCHRAUBE		
62	406519214	4	HEX SCREW ISO 4017 M12X45 A4-70	SECHSKANTSCHRAUBE		
63	406518514	3	HEX SCREW ISO 4017 M6X25 A4-70	SECHSKANTSCHRAUBE		
70	420001114	2	WASHER ISO 7089 10 A4	SCHEIBE		
71	421300214	28	WASHER DIN 6340 10.5 C35	SCHEIBE		
72	4635283	8	WASHER DIN 6340 13 ST	SCHEIBE		
73	10540500	6	WASHER ISO 7093-1 6 A4	SCHEIBE		
80	10540494	2	HEX NUT ISO 10511 M10 A4	SECHSKANTMUTTER		
81	411514614	8	HEX NUT ISO 4032 M10 A4-70	SECHSKANTMUTTER		
82	10540495	4	HEX NUT ISO 10511 M12 A4	SECHSKANTMUTTER		
83	411880614	4	HEX NUT ISO 7042 M10 8	SECHSKANTMUTTER		
84	10540492	3	HEX NUT ISO 10511 M6 A4	SECHSKANTMUTTER		

OHNE BILD
WITHOUT ILLUSTRATION
SANS PLANCHE
SIN FIG.
SEM ILUSTRAÇÃO
БЕЗ ИЗОБРАЖЕНИЯ

600000

Pos.	Item	Quantity	Description	Bezeichnung	Serie	K
1	10144034	1	INPUT MODULE	EINGANGSMODUL		
2	10143994	1	OUTPUT MODULE	AUSGANGSMODUL		
3	10142813	1	SEAL	DICHTUNG		
4	10141051	1	PROFIL CLAMP	PROFILSCHELLE		

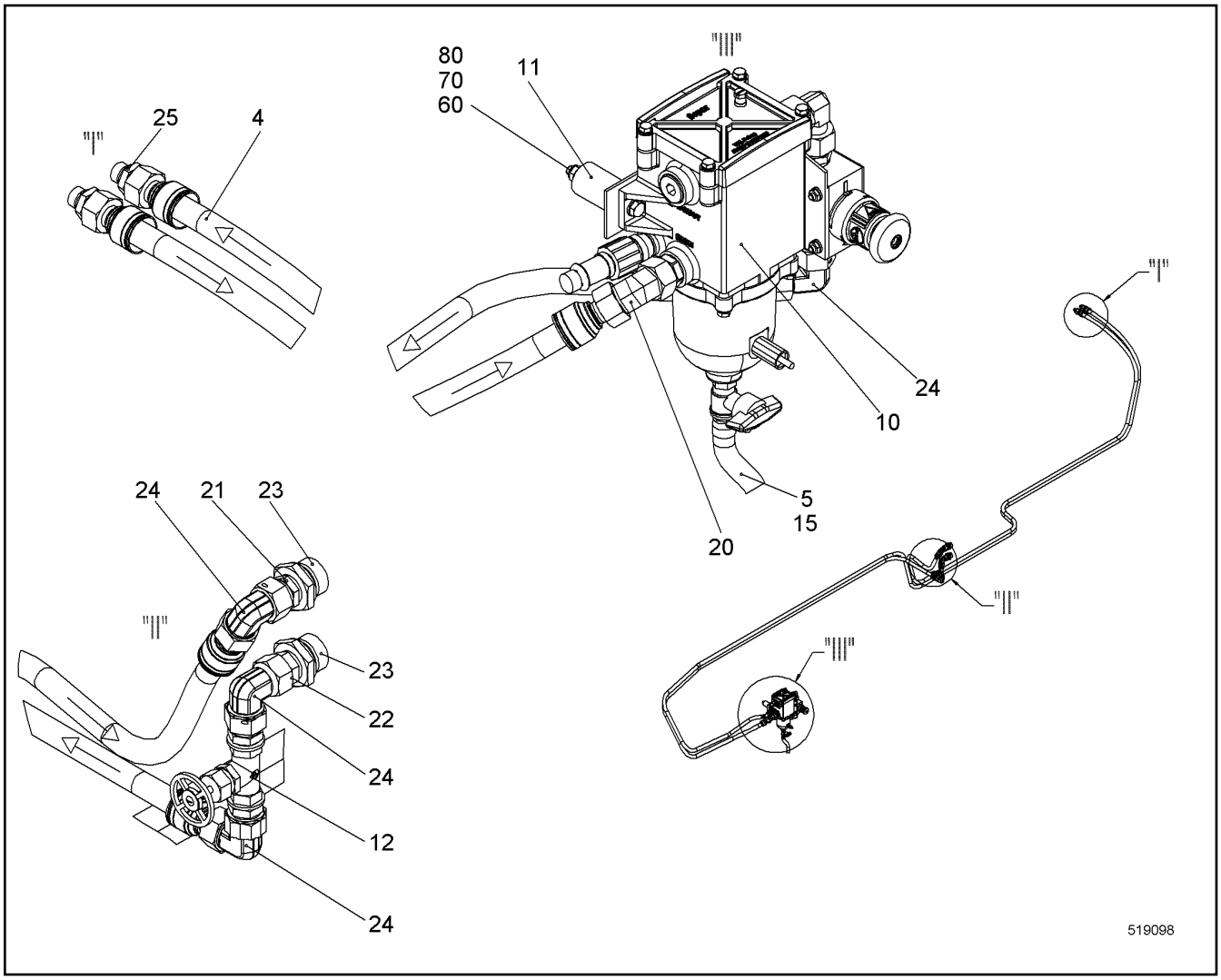

Pos.	Item	Quantity	Description	Bezeichnung	Serie	K
4	11249729	1	HOSE LIST ⇨ ❑ 271	SCHLAUCHLISTE		
5	11621769	0.5	COOLING WATER HOSE	KUEHLWASSERSCHLAUCH		
10	10550911	1	ADD-ON PRELIMINARY FUEL FILTER ⇨ ❑ 272	KRAFTSTOFFVORFILTER ANBAU		
11	11249738	2	WASHER 10/30X50 S355J2;EN 10025-2	SCHEIBE		
12	7402781	1	THROUGH-VALVE	DURCHGANGSVENTIL		
15	774204914	1	HOSE CLAMP	SCHLAUCHSCHELLE		
20	10035314	1	FLANGE JOINT	VERSCHRAUBUNG		
21	247009702	1	FLANGE JOINT	VERSCHRAUBUNG		
22	247011602	1	FLANGE JOINT	VERSCHRAUBUNG		
23	247043102	2	FLANGE JOINT	VERSCHRAUBUNG		
24	247108302	4	FLANGE JOINT	VERSCHRAUBUNG		
25	471034714	2	FLANGE JOINT	VERSCHRAUBUNG		
60	10538809	2	HEX SCREW ISO 4017 M8X80 A4-70	SECHSKANTSCHRAUBE		
70	420001014	4	WASHER ISO 7089 8 A4	SCHEIBE		
80	10540493	2	HEX NUT ISO 10511 M8 A4	SECHSKANTMUTTER		

ACHTUNG !
ATTENTION !
ATTENTION !
ATENCIÓN !
ATENÇÃO !
ВНИМАНИЕ

Für Schlauchbestellungen kann über die Schlauchnummer, in der entsprechenden Schlauchliste, die Identnummer festgestellt werden.

For ordering flexible hoses you can find the identification number through the hose-number in the corresponding hose-list.

Pour des ordres de tuyau flexible le nombre d'identification on voit dans la liste de tuyau flexible correspondente.

Para el pedido de manguera, indicar el número de identificación de la manguera de la lista respectiva.

Para se encomendar uma mangueira, consulte o número de identificaçao na respectiva lista de mangueiras.

Для оформления заказов на шланги/рукавы идент. № может быть определен при помощи номера шланга/рукава, указанного в соотетствующем перечне шлангов/рукавов.

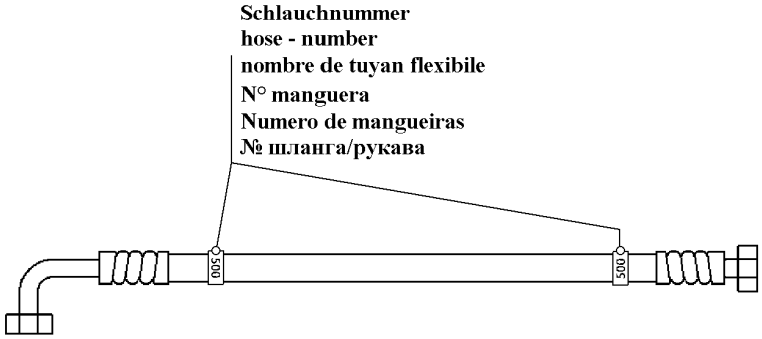

500000

Pos.	Item	Quantity	Description	Bezeichnung	Serie	K
800	928130914	1	HOSE CPL	SCHLAUCH KPL		
801	928130914	1	HOSE CPL	SCHLAUCH KPL		
803	996779714	1	HOSE CPL	SCHLAUCH KPL		

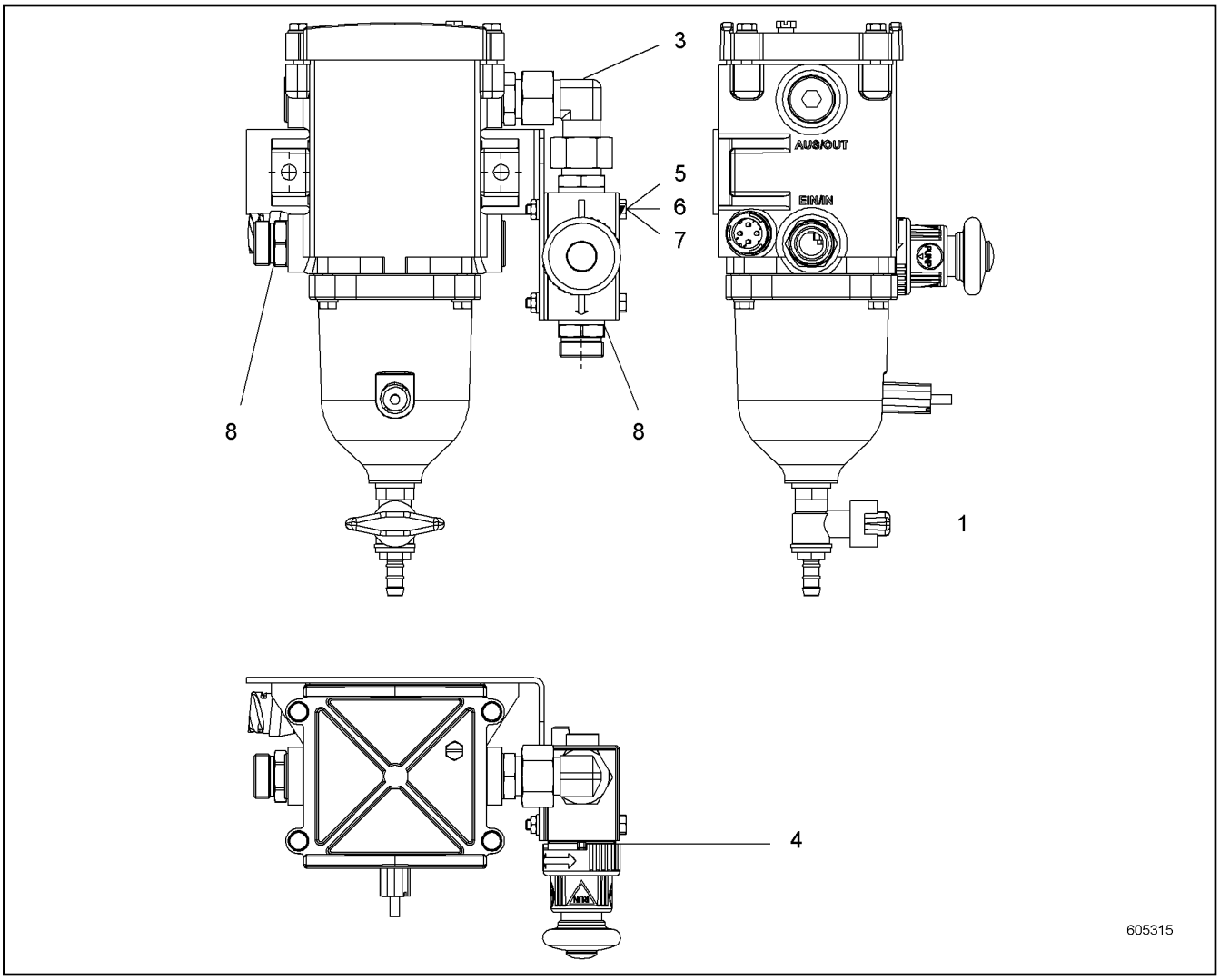

Pos.	Item	Quantity	Description	Bezeichnung	Serie	K
1	10303007	1	FUEL PREFILTER ⇨ ❑ 273	KRAFTSTOFFVORFILTER		
3	11229464	1	FLANGE JOINT	VERSCHRAUBUNG		
4	10129218	1	MANUAL VENTILATION PUMP	HANDENTLUEFTUNGSPUMPE		
5	11219069	2	SOCKET HEAD SCREW M5X55	ZYLINDERSCHRAUBE		
6	11219056	2	LOCK NUT DIN 985	SICHERUNGSMUTTER		
7	11219067	2	WASHER ISO 7089	SCHEIBE		
8	11067653	2	FLANGE JOINT	VERSCHRAUBUNG		

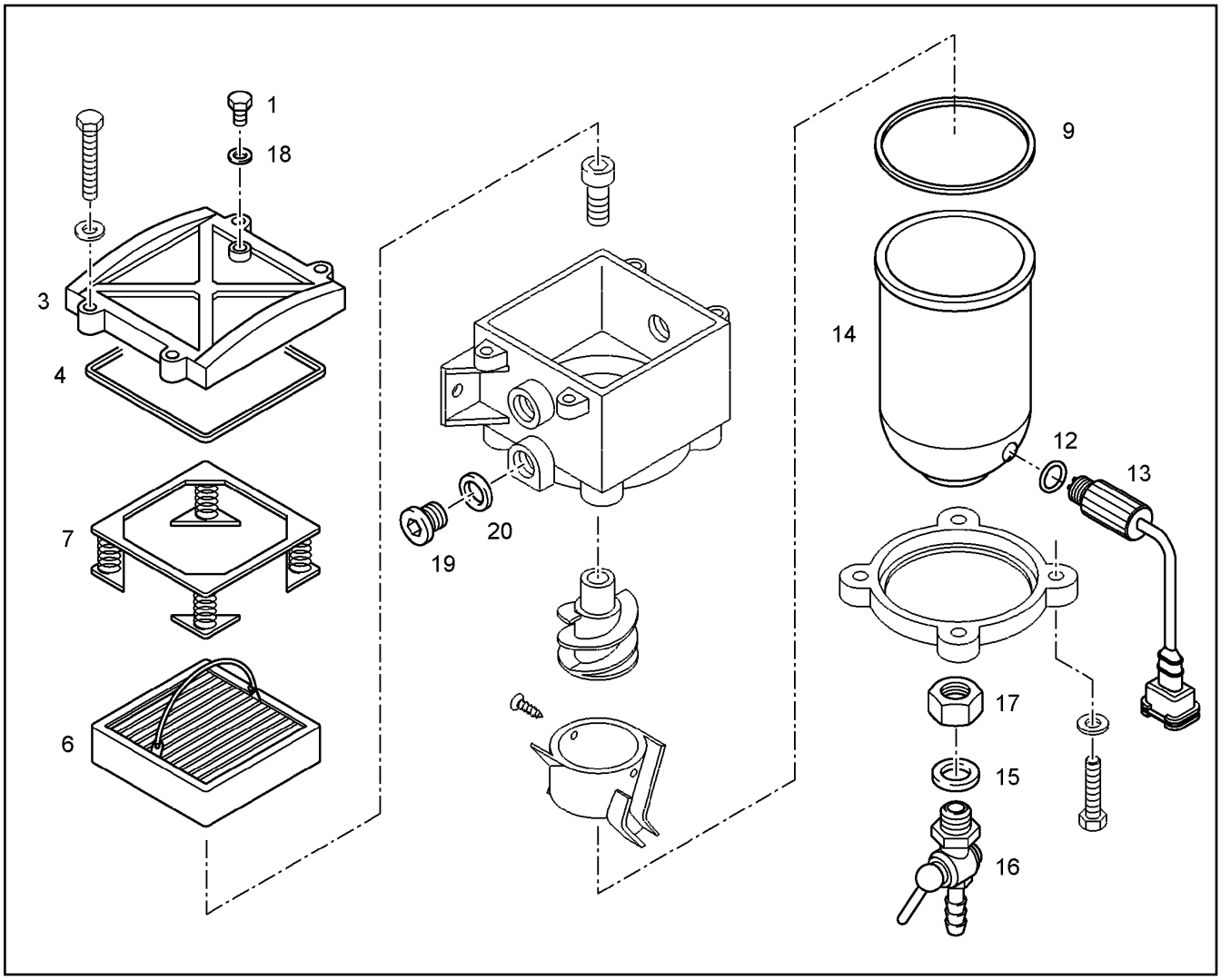

Pos.	Item	Quantity	Description	Bezeichnung	Serie	K
1	7412942	1	VENTILATION SCREW	ENTLUEFTUNGSSCHRAUBE		
3	7027755	1	COVER	DECKEL		
4	10294171	1	SEAL	DICHTUNG		
6	553183708	1	FILTER ELEMENT	FILTERELEMENT		
7	10032001	1	SPRING ELEMENT	FEDERELEMENT		
9	10294170	1	BOWLEN SEALING	BOWLENDICHTUNG		
12	7380986	1	O-RING	O-RING		
13	10331335	1	WATER SENSOR	WASSERSONDE		
14	10331395	1	BOWL	BOWLE		
15	7412937	1	O-RING	O-RING		
16	11696074	1	DRAIN TAP	ABLASSHAHN		
17	11005554	1	TWO-HOLE NUT AL	ZWEILOCHMUTTER		
18	7412935	1	SEAL	DICHTUNG		
19	10340236	2	SCREW PLUG M22X1.5	VERSCHLUSSSCHRAUBE		
20	10340226	2	O-RING	O-RING		

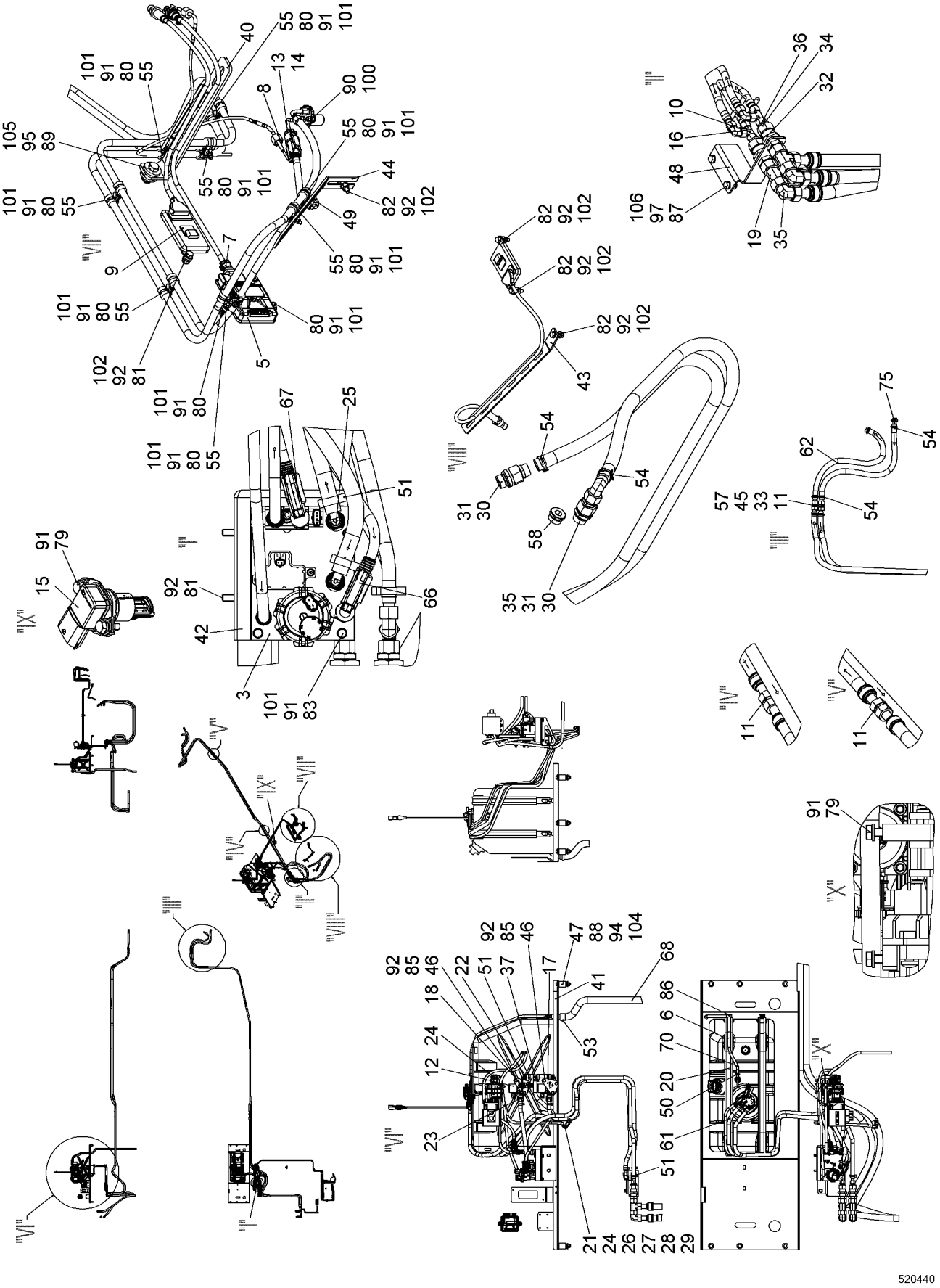
520440

Pos.	Item	Quantity	Description	Bezeichnung	Serie	K
3	10144100	1	PUMP	PUMPE		
4	11374417	1	COMPRESSOR	KOMPRESSOR		
5	10144039	1	CONTROL GEAR	STEUERGERAET		
6	11242408	1	UREA CONTAINER ⇨ ❑ 277	HARNSTOFFBEHAELTER		
7	10144038	1	SENSOR	SENSOR		
8	11349182	2	TEMPERATURE SENSOR	TEMPERATURSENSOR		
9	11008787	2	SENSOR	SENSOR		
10	247117702	1	FLANGE JOINT	VERSCHRAUBUNG		
11	247000902	4	FLANGE JOINT	VERSCHRAUBUNG		
12	11082158	2	WATER VALVE	WASSERVENTIL		
13	10144093	1	INJECTOR CPL.	INJEKTOR KPL.		
14	10144861	1	SEAL	DICHTUNG		
15	10141261	1	MOISTURE SENSOR	FEUCHTESENSOR		
16	247128602	1	FLANGE JOINT	VERSCHRAUBUNG		
17	11274707	1	SIGN	SCHILD		
18	11274708	1	SIGN	SCHILD		
19	247138602	2	FLANGE JOINT	VERSCHRAUBUNG		
20	10581173	2	TIGTENING STRAP	SPANNBAND		
21	10871759	4	PLUG-IN SLEEVE	EINSTECKHUELSE		
22	11082454	2	PLUG COUPLING	STECKKUPPLUNG		
23	10678754	2	PLUG COUPLING	STECKKUPPLUNG		
24	247021802	3	FLANGE JOINT	VERSCHRAUBUNG		
25	11482007	4	PLUG COUPLING	STECKKUPPLUNG		
26	477100208	3	PROFILE RING	PROFILRING		
27	247048502	3	FLANGE JOINT	VERSCHRAUBUNG		
28	506801208	1	FLANGE JOINT	VERSCHRAUBUNG		
29	710103008	1	SEALING RING	DICHTRING		
30	247041502	2	FLANGE JOINT	VERSCHRAUBUNG		
31	471031508	2	FLANGE JOINT	VERSCHRAUBUNG		
32	247027302	2	FLANGE JOINT	VERSCHRAUBUNG		
33	247049002	2	FLANGE JOINT	VERSCHRAUBUNG		
34	247040902	2	FLANGE JOINT	VERSCHRAUBUNG		
35	247126202	2	FLANGE JOINT	VERSCHRAUBUNG		
36	511713914	4	HOSE UNION	SCHLAUCHSTUTZEN		
37	553087814	1	TEE	T-STUECK		
40	10577229	1	WP	WP		
41	10579806	1	HOLDER ST.CONST.	HALTER SCHWK		
42	11242757	1	HOLDER	HALTER		
43	11279013	1	WP	WP		
44	11279036	1	BRACKET	BUEGEL		
45	956385814	2	FITTINGS	STUTZEN		
46	10553403	6	WASHER 9/16X25 S355J2C;EN 10277	SCHEIBE		
47	11217169	6	DISTANCE SLEEVE	DISTANZHUELSE		
48	11279237	1	BRACKET	BUEGEL		
49	10816958	1	FLANGE JOINT	VERSCHRAUBUNG		
50	10581765	1	HOSE CLAMP	SCHLAUCHSCHELLE		
51	774204914	14	HOSE CLAMP	SCHLAUCHSCHELLE		
53	790244814	1	HOSE CLAMP	SCHLAUCHSCHELLE		
54	11067863	4	HOSE CLAMP	SCHLAUCHSCHELLE		
55	7362546	16	FASTENING CLAMP	HALTERUNGSSCHELLE		
57	477102814	4	FLANGE JOINT	VERSCHRAUBUNG		
58	477705214	1	FLANGE JOINT	VERSCHRAUBUNG		
61	11621769	6.5	COOLING WATER HOSE	KUEHLWASSERSCHLAUCH		
62	11621772	2	COOLING WATER HOSE	KUEHLWASSERSCHLAUCH		
65	11621764	9	HOSE	SCHLAUCH		
66	10144282	1	HOSE LINE	SCHLAUCHLEITUNG		
67	10144297	1	HOSE LINE	SCHLAUCHLEITUNG		
68	886002814	1.3	HOSE	SCHLAUCH		
70	553128608	1.5	FUEL HOSE	KRAFTSTOFFSCHLAUCH		

Pos.	Item	Quantity	Description	Bezeichnung	Serie	K
71	10227531	6	CORRUGATED PIPE	WELLROHR		
75	10444797	1	CONNECTING PIPE	VERBINDUNGSROHR		
79	406501714	5	HEX SCREW ISO 4017 M6X16 A4-70	SECHSKANTSCHRAUBE		
80	406518514	10	HEX SCREW ISO 4017 M6X25 A4-70	SECHSKANTSCHRAUBE		
81	406518814	4	HEX SCREW ISO 4017 M8X20 A4-70	SECHSKANTSCHRAUBE		
82	406501314	4	HEX SCREW ISO 4017 M8X30 A4-70	SECHSKANTSCHRAUBE		
83	10538799	4	HEX SCREW ISO 4017 M6X45 A4-70	SECHSKANTSCHRAUBE		
85	10541593	6	HEX SCREW ISO 4017 M8X85 A4-70	SECHSKANTSCHRAUBE		
86	10539505	4	SOCKET HEAD SCREW ISO 4762 M10X60 A4-7	ZYLINDERSCHRAUBE		
87	406511914	2	HEX SCREW ISO 4017 M10X25 A4-70	SECHSKANTSCHRAUBE		
88	406511214	6	HEX SCREW ISO 4017 M10X70 A4-70	SECHSKANTSCHRAUBE		
89	406518414	1	HEX SCREW ISO 4017 M12X35 A4-70	SECHSKANTSCHRAUBE		
90	420005214	2	WASHER ISO 7089 5 A4	SCHEIBE		
91	420000414	33	WASHER ISO 7089 6 A4	SCHEIBE		
92	420001014	26	WASHER ISO 7089 8 A4	SCHEIBE		
94	421300214	12	WASHER DIN 6340 10.5 C35	SCHEIBE		
95	4635283	2	WASHER DIN 6340 13 ST	SCHEIBE		
97	420001114	4	WASHER ISO 7089 10 A4	SCHEIBE		
100	411551114	2	HEX NUT ISO 4032 M5 A4-70	SECHSKANTMUTTER		
101	10540492	14	HEX NUT ISO 10511 M6 A4	SECHSKANTMUTTER		
102	10540493	6	HEX NUT ISO 10511 M8 A4	SECHSKANTMUTTER		
104	411514614	6	HEX NUT ISO 4032 M10 A4-70	SECHSKANTMUTTER		
105	10540495	1	HEX NUT ISO 10511 M12 A4	SECHSKANTMUTTER		
106	10540494	2	HEX NUT ISO 10511 M10 A4	SECHSKANTMUTTER		
120	11621284	1	UNLOCKING TOOL	ENTRIEGELUNGSWERKZEUG		
125	11234767	20	CABLE TIE	KABELBINDER		
126	11269498	1	HOSE LIST	SCHLAUCHLISTE		
			⇨ ❑ 278			

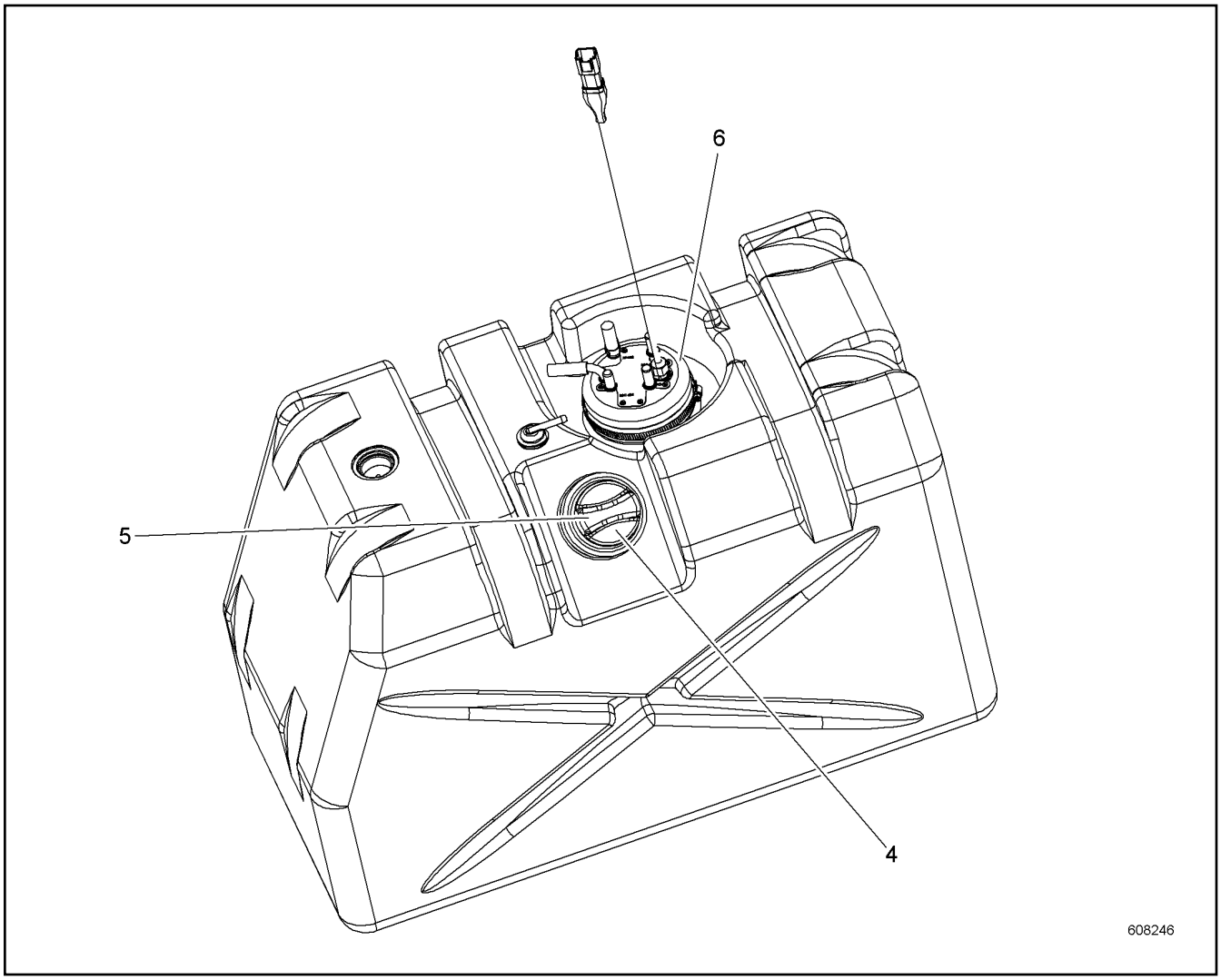

Pos.	Item	Quantity	Description	Bezeichnung	Serie	K
4	11101351	1	LOCKABLE TANK CAP	TANKVERSCHLUSS		
5	10146538	1	SUCTION MODUL	ENTNAHMEMODUL		
6	11239595	1	SIEVE	SIEB		

ACHTUNG !
ATTENTION !
ATTENTION !
ATENCIÓN !
ATENÇÃO !
ВНИМАНИЕ

Für Schlauchbestellungen kann über die Schlauchnummer, in der entsprechenden Schlauchliste, die Identnummer festgestellt werden.

For ordering flexible hoses you can find the identification number through the hose-number in the corresponding hose-list.

Pour des ordres de tuyau flexible le nombre d'identification on voit dans la liste de tuyau flexible correspondente.

Para el pedido de manguera, indicar el número de identificación de la manguera de la lista respectiva.

Para se encomendar uma mangueira, consulte o número de identificaçao na respectiva lista de mangueiras.

Для оформления заказов на шланги/рукавы идент. № может быть определен при помощи номера шланга/рукава, указанного в соотетствующем перечне шлангов/рукавов.

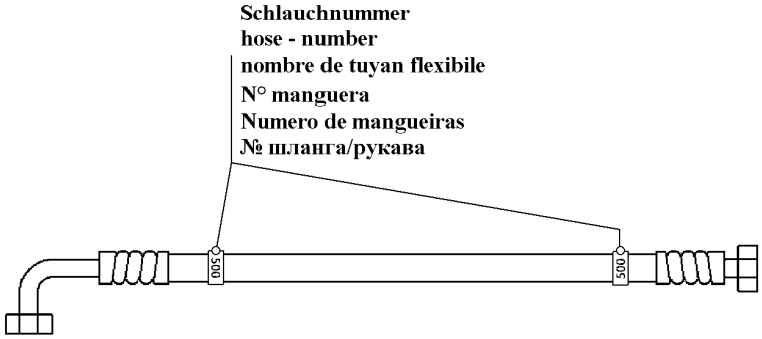

500000

Pos.	Item	Quantity	Description	Bezeichnung	Serie	K
822	996770614	1	HOSE CPL	SCHLAUCH KPL		
823	996770714	1	HOSE CPL	SCHLAUCH KPL		
824	996770814	1	HOSE CPL	SCHLAUCH KPL		
825	996770614	1	HOSE CPL	SCHLAUCH KPL		
826	996771014	1	HOSE CPL	SCHLAUCH KPL		
827	996771114	1	HOSE CPL	SCHLAUCH KPL		

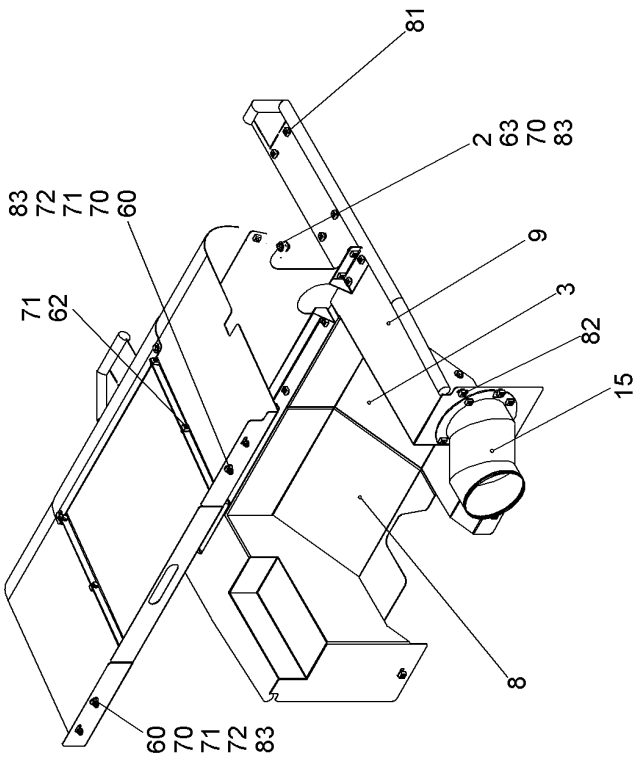
81
2
63
70
83
83
72
71
70
60
9
71
62
3
82
15
8
60
70
71
72
83

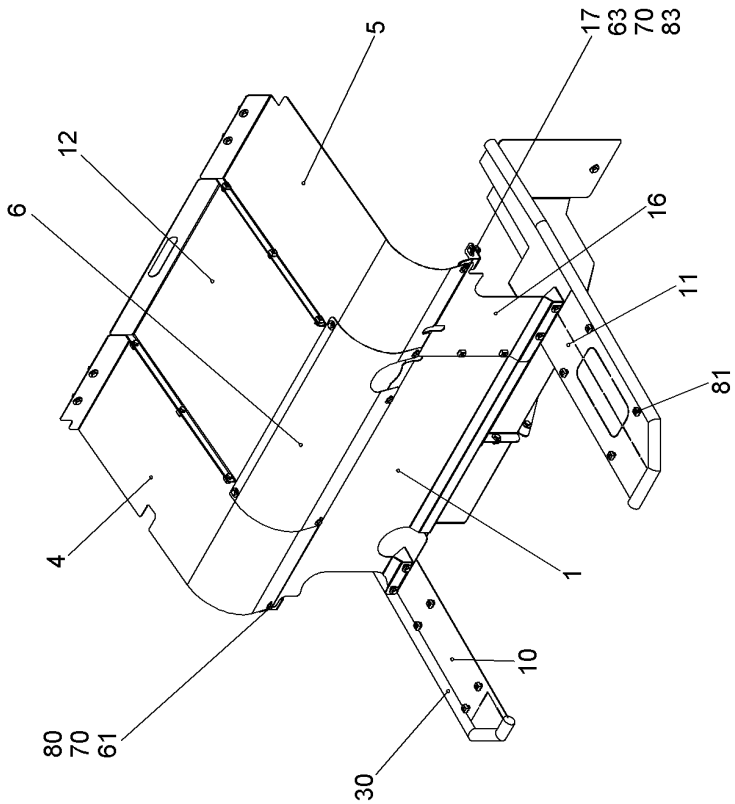
5
17
63
70
83
12
6
16
11
81
4
1
10
80
70
61
30

519126

Pos.	Item	Quantity	Description	Bezeichnung	Serie	K
1	11252203	1	COVER	ABDECKUNG		
2	11252207	1	COVER	ABDECKUNG		
3	11252211	1	COVER	ABDECKUNG		
4	11252214	1	COVER	ABDECKUNG		
5	11252215	1	COVER	ABDECKUNG		
6	11252216	1	COVER	ABDECKUNG		
8	11252208	1	COVER	ABDECKUNG		
9	11252213	1	COVER	ABDECKUNG		
10	10583346	1	COVER	ABDECKUNG		
11	10583347	1	COVER	ABDECKUNG		
12	11262861	1	COVER	ABDECKUNG		
15	11252578	1	SUCTION PIPE AIR	ANSAUGROHR LUFT		
16	11252205	1	COVER	ABDECKUNG		
17	11252206	1	COVER	ABDECKUNG		
30	7014524	4.5	CLAMPING PROFILE	KLEMMPROFIL		
60	406511614	4	HEX SCREW ISO 4017 M10X30 A4-70	SECHSKANTSCHRAUBE		
61	406511914	40	HEX SCREW ISO 4017 M10X25 A4-70	SECHSKANTSCHRAUBE		
62	406518714	10	HEX SCREW ISO 4017 M10X20 A4-70	SECHSKANTSCHRAUBE		
63	406509314	2	HEX SCREW ISO 4017 M10X35 A4-70	SECHSKANTSCHRAUBE		
70	10540511	51	WASHER ISO 7093-1 10 A4	SCHEIBE		
71	420001114	11	WASHER ISO 7089 10 A4	SCHEIBE		
72	421300214	2	WASHER DIN 6340 10.5 C35	SCHEIBE		
80	413003308	32	CAGE NUT M10-R-140-32	KAEFIGMUTTER		
81	413013314	8	CAGE NUT M10-R-140-62	KAEFIGMUTTER		
82	413003508	10	CAGE NUT M10-R-140-47	KAEFIGMUTTER		
83	10540494	6	HEX NUT ISO 10511 M10 A4	SECHSKANTMUTTER		

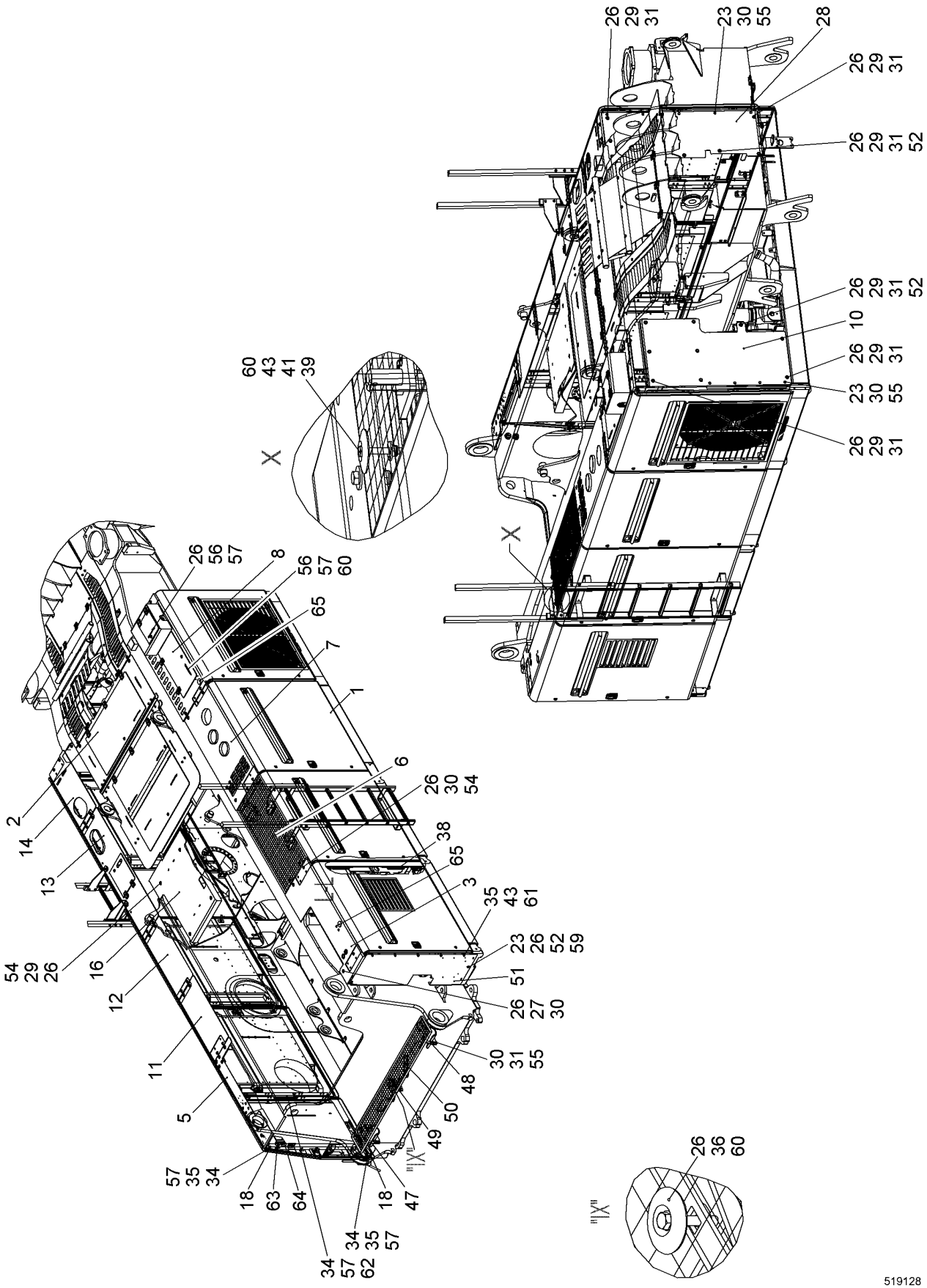
519128

Pos.	Item	Quantity	Description	Bezeichnung	Serie	K
1	11244091	1	COVERS ⇨ ❑ 285	VERKLEIDUNG		
2	10545910	1	MOTOR COWLING ⇨ ❑ 297	MOTORABDECKUNG		
3	10545911	1	ROOF	DACH		
4	10336682	1	WP	WP		
5	10545914	1	ROOF	DACH		
6	10545915	1	GRATING	GITTERROST		
7	10545916	1	ROOF	DACH		
8	10545917	1	ROOF	DACH		
9	11248969	2	BRACKET	BUEGEL		
10	10545918	1	SHEET	PLATTE		
11	10545957	1	ROOF	DACH		
12	10545958	1	ROOF	DACH		
13	11244865	1	ROOF	DACH		
14	11244758	1	ROOF	DACH		
15	11248991	2	ORIFICE	BLENDE		
16	10563073	1	ROOF	DACH		
17	11273242	4	SLIDEWAY 8/14X35 POM	GLEITFUEHRUNG		
18	11217232	4	PLATE	BLECH		
19	11248990	2	ORIFICE	BLENDE		
20	11248992	2	ORIFICE	BLENDE		
21	11248964	1	ORIFICE	BLENDE		
22	11248966	1	ORIFICE	BLENDE		
23	406511914	35	HEX SCREW ISO 4017 M10X25 A4-70	SECHSKANTSCHRAUBE		
24	406518614	5	HEX SCREW ISO 4017 M10X50 A4-70	SECHSKANTSCHRAUBE		
25	10563082	1	ANGLE	WINKEL		
26	10540511	134	WASHER ISO 7093-1 10 A4	SCHEIBE		
28	11244094	1	SHEET	PLATTE		
29	485550014	21	CAGE NUT M10-RR-140-62	KAEFIGMUTTER		
30	10540494	54	HEX NUT ISO 10511 M10 A4	SECHSKANTMUTTER		
31	406511614	28	HEX SCREW ISO 4017 M10X30 A4-70	SECHSKANTSCHRAUBE		
32	970857103	1	FILING DESK	PULTABLAGE		
33	10223693	2	HOLDER	HALTER		
34	420001014	21	WASHER ISO 7089 8 A4	SCHEIBE		
35	406501414	11	HEX SCREW ISO 4017 M8X25 A4-70	SECHSKANTSCHRAUBE		
36	10538807	5	HEX SCREW ISO 4017 M8X50 A4-70	SECHSKANTSCHRAUBE		
37	10225695	2	SHEET	PLATTE		
38	959465714	2	BRACKET	BUEGEL		
39	10331506	6	HEX SCREW ISO 4017 M8X55 A4-70	SECHSKANTSCHRAUBE		

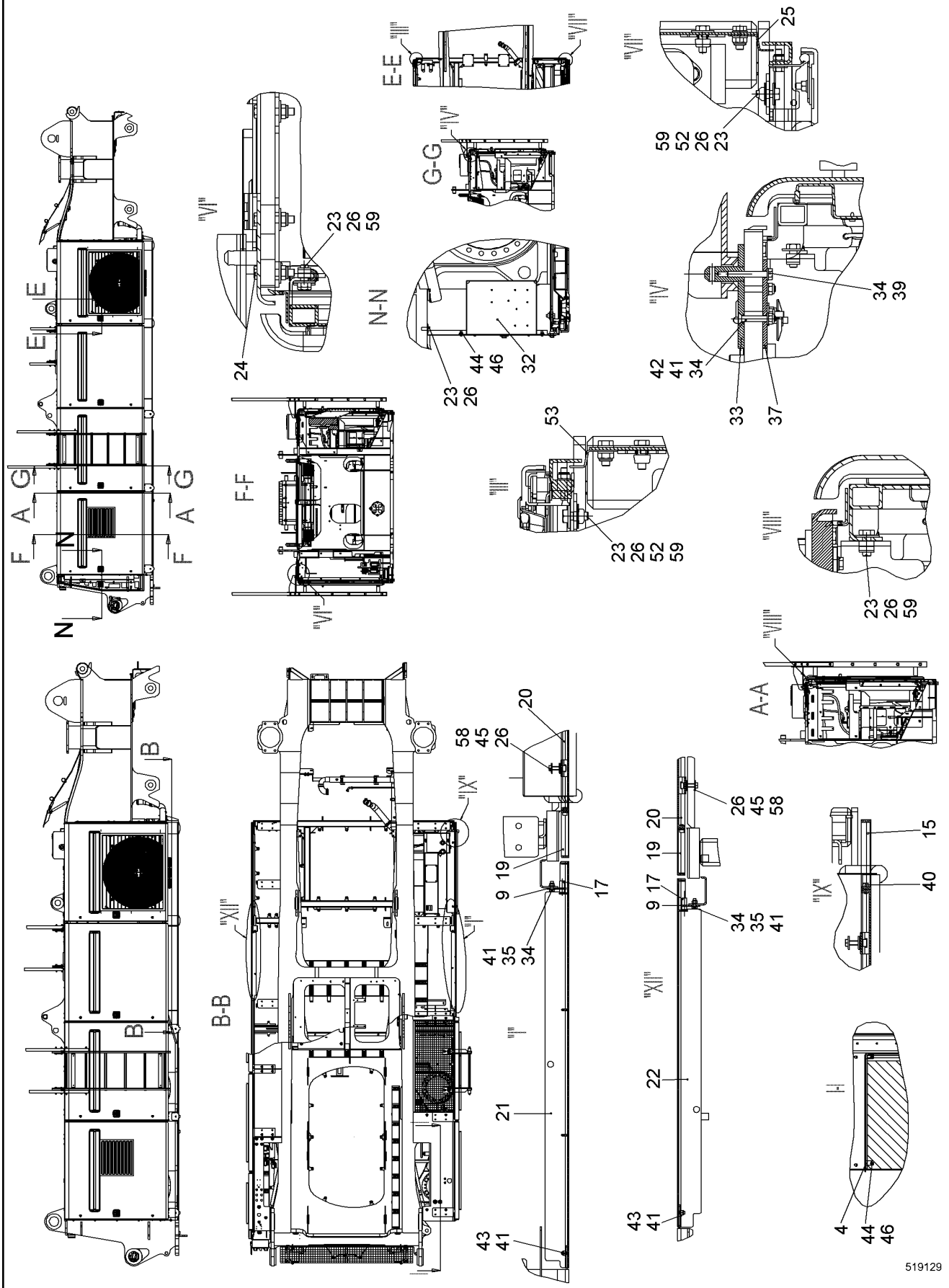

8.7.2015 519129	**138281_ETK_001**	283 (3/4)
LIEBHERR	**PANELLING SUPERSTR. INSTAL.CPL** **VERKLEIDUNG OW EINBAU KPL**	**11 24 409 0**

Pos.	Item	Quantity	Description	Bezeichnung	Serie	K
40	10539483	8	SOCKET HEAD SCREW ISO 4762 M8X16 A4-7	ZYLINDERSCHRAUBE		
41	10540493	23	HEX NUT ISO 10511 M8 A4	SECHSKANTMUTTER		
42	408601014	6	COUNTERSUNK SCREW DIN 7991 M8X50 8.8;	SENKSCHRAUBE		
43	10540510	13	WASHER ISO 7093-1 8 A4	SCHEIBE		
44	420000414	10	WASHER ISO 7089 6 A4	SCHEIBE		
45	406527814	4	HEX SCREW ISO 4017 M10X40 A4-70	SECHSKANTSCHRAUBE		
46	10540492	10	HEX NUT ISO 10511 M6 A4	SECHSKANTMUTTER		
47	10584123	1	HOLDER	HALTER		
48	10584124	1	HOLDER	HALTER		
49	10584210	1	HOLDER CPL	HALTER KPL		
50	10584105	1	GRATING	GITTERROST		
51	10583642	1	SHEET	PLATTE		
52	10349263	24	DISTANCE WASHER RD30X1 ALU	DISTANZSCHEIBE		
53	11244498	1	ANGLE	WINKEL		
54	406512014	31	HEX SCREW ISO 4017 M10X45 A4-70	SECHSKANTSCHRAUBE		
55	420001114	40	WASHER ISO 7089 10 A4	SCHEIBE		
56	958478414	2	BRACKET	BUEGEL		
57	411515014	7	HEX NUT ISO 4032 M8 A4-70	SECHSKANTMUTTER		
58	413003508	4	CAGE NUT M10-R-140-47	KAEFIGMUTTER		
59	890035314	21	T-NUT M10X12	T-NUTENSTEIN		
60	10098157	11	DISH	TELLER		
61	485550114	5	CAGE NUT M8-RR-123-47	KAEFIGMUTTER		
62	402600114	1	RING BOLT DIN 580 M8 C15E;EN 10084	RINGSCHRAUBE		
63	11225402	2	GROMMET	DURCHFUEHRUNGSTUELLE		
64	591645108	1	BLANKING PLUG	VERSCHLUSSSTOPFEN		
65	779014014	2	BLANKING PLUG	VERSCHLUSSSTOPFEN		

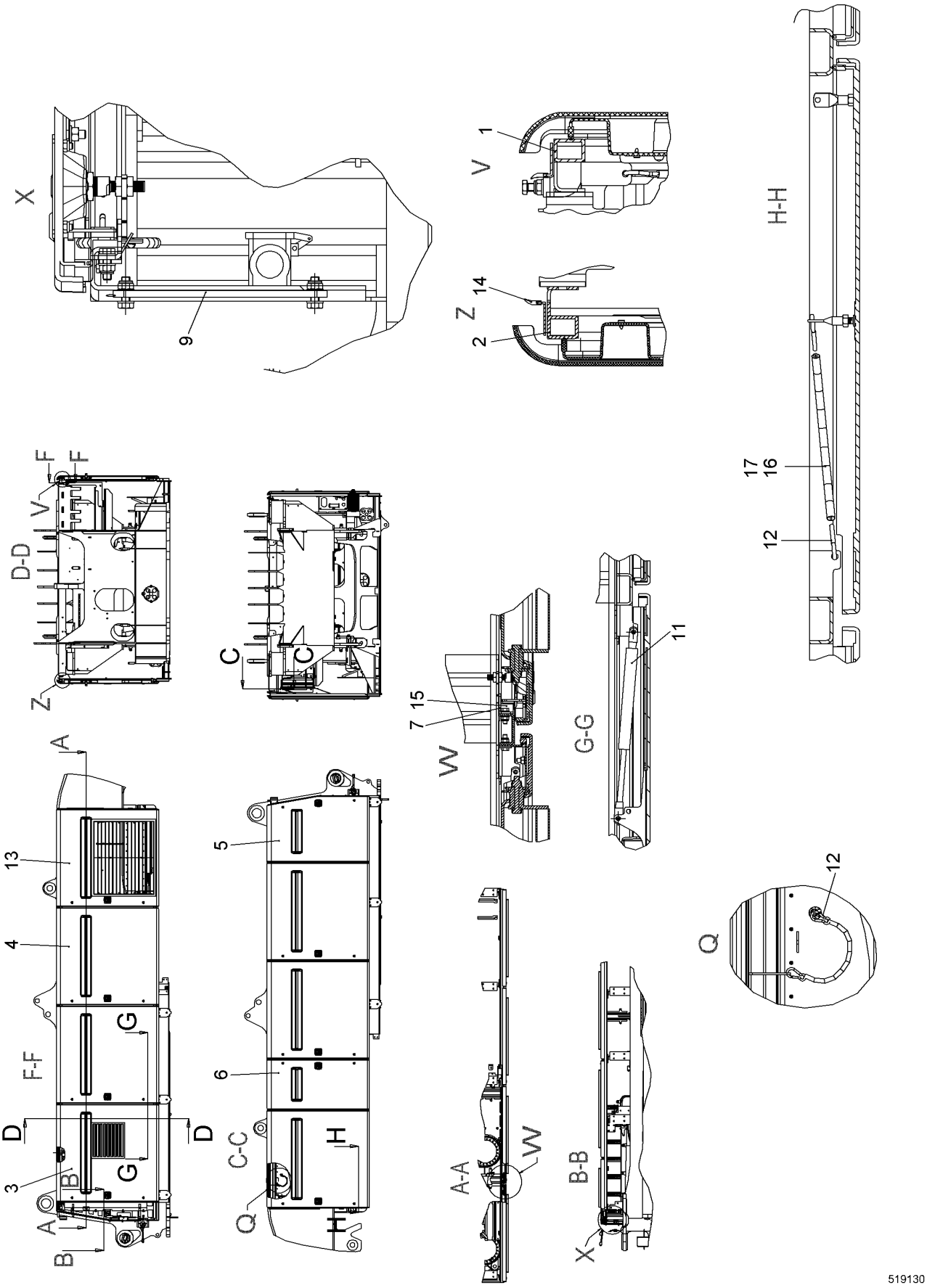
X
9
V
1
Z
14
2
H-H
17
16
12
D-D
F
F
V
Z
C
C
7
15
W
G-G
11
A
13
4
F-F
G
D
D
3
B
G
A
B
5
6
C-C
H
Q
H
A-A
W
B-B
X
Q
12
519130

Pos.	Item	Quantity	Description	Bezeichnung	Serie	K
1	10566842	1	FRAME	RAHMEN		
2	11244092	1	FRAME	RAHMEN		
3	10578835	1	DOOR ⇨ ❑ 289	TUER		
4	10578976	5	DOOR ⇨ ❑ 291	TUER		
5	10579400	1	DOOR ⇨ ❑ 293	TUER		
6	10566237	1	DOOR ⇨ ❑ 295	TUER		
7	10351547	7	WP	WP		
8	10351548	1	WP	WP		
9	10020512	1	BULKHEAD PLATE	SCHOTTPLATTE		
11	592323514	7	GAS SPRING	GASFEDER		
12	744011114	5	SNAP HOOK	KARABINERHAKEN		
13	10565808	1	DOOR ⇨ ❑ 296	TUER		

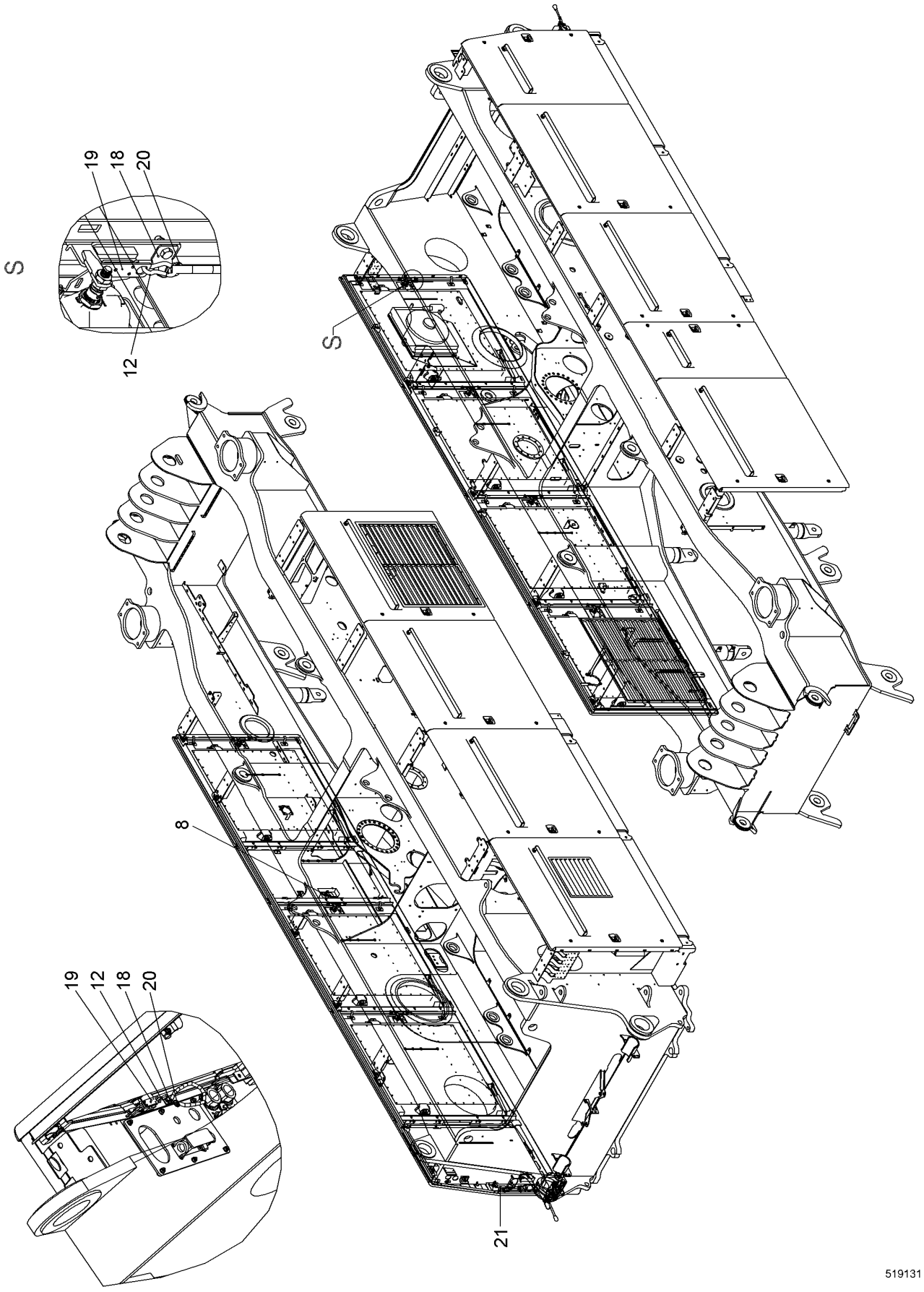
19
18
20
S
12
S
8
19
12
18
20
21
519131

Pos.	Item	Quantity	Description	Bezeichnung	Serie	K
14	262105314	9	FLEXIBLE EDGE PROTECTOR	KANTENSCHUTZ FLEXIBEL		
15	790549214	9	DOOR WEDGE	TUERKEIL		
16	740000801	2.3	KNOTTED-LINK CHAIN	KNOTENKETTE		
17	603000408	2.3	INSULATING HOSE	ISOLIERSCHLAUCH		
18	10574364	2	ANGLE	WINKEL		
19	10574357	2	PLATE	BLECH		
20	704214114	2	KEY RING RD 25	SCHLUESSELRING		
21	10581590	1	PLATE	BLECH		

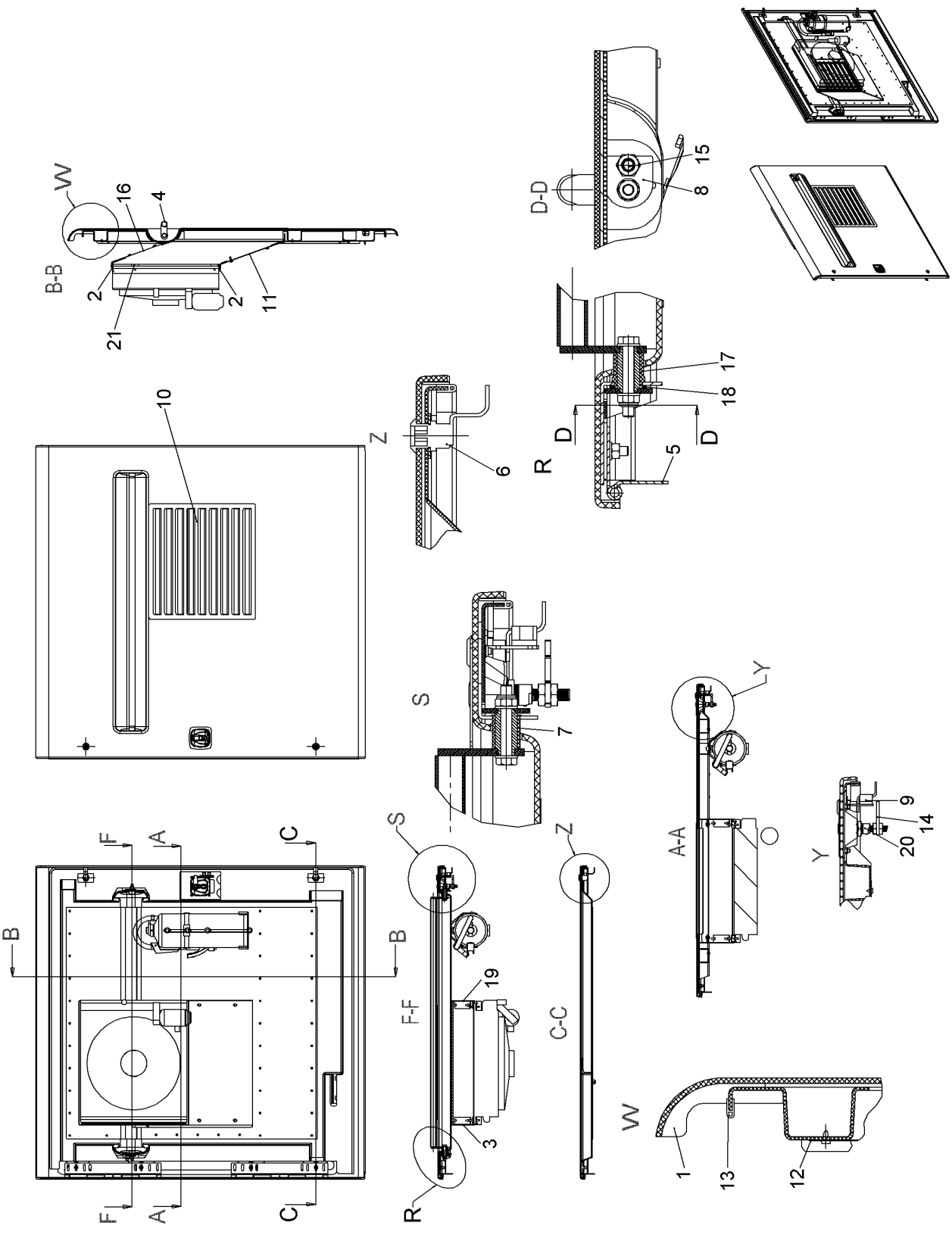

519779

8.7.2015 519779 LIEBHERR	**138281_ETK_001** **DOOR** **TUER**	❑ 289 (1/2) **10 57 883 5**

Pos.	Item	Quantity	Description	Bezeichnung	Serie	K
1	10578836	1	DOOR	TUER		
2	262105314	1.1	FLEXIBLE EDGE PROTECTOR	KANTENSCHUTZ FLEXIBEL		
3	10223447	1	WP	WP		
4	10020487	1	GRIP	GRIFF		
5	385204714	2	HINGE	SCHARNIER		
6	10020161	2	ROTATING BAR CPL	DREHRIEGEL KPL		
7	797029114	1	BUSHING 26.5/20X30 POM	BUCHSE		
8	990443514	2	LIMIT STOP	ANSCHLAG		
9	790549314	1	DOOR WEDGE STOP	TUERKEIL PUFFER		
10	10223362	1	FAN COVER	LUEFTERABDECKUNG		
11	10223448	1	WP	WP		
12	10578841	1	PERFORATED PLATE	LOCHBLECH		
13	262107714	4	SEALING PROFILE	DICHTUNGSPROFIL		
14	10351784	1	LOCKING BAR	RIEGEL		
15	790550914	1	THRUST PIECE M12X26 X8CRNIS18-9;EN 1008	DRUCKSTUECK		
16	10223449	1	WP	WP		
17	958471514	1	BUSHING 30/20X32 POM	BUCHSE		
18	958471614	1	WASHER 25.2/32X3 POM	SCHEIBE		
19	10223446	1	WP	WP		
20	10353879	1	DOOR LOCK	TUERSCHLOSS		
21	726902614	4	RUBBER MOUNT	LAGER GUMMI		

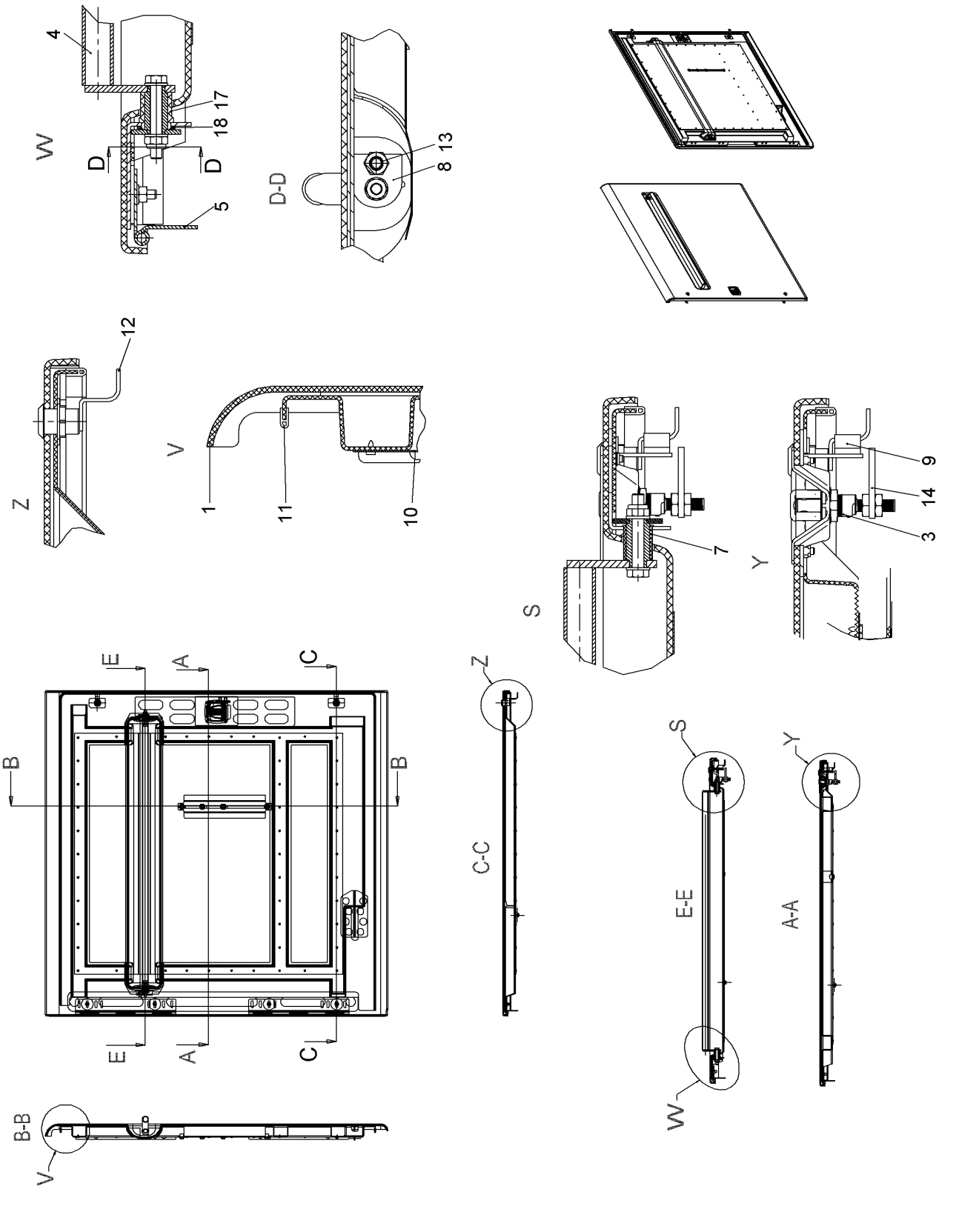
4
W
D
D
18 17
5
D-D
8 13
12
Z
V
1
11
10
S
7
Y
9
14
3
E
A
C
B
B
E
A
C
B-B
V
Z
C-C
S
E-E
W
Y
A-A
516549

Pos.	Item	Quantity	Description	Bezeichnung	Serie	K
1	10578972	1	DOOR	TUER		
3	10353879	1	DOOR LOCK	TUERSCHLOSS		
4	10020487	1	GRIP	GRIFF		
5	385204714	2	HINGE	SCHARNIER		
7	797029114	1	BUSHING 26.5/20X30 POM	BUCHSE		
8	990443514	2	LIMIT STOP	ANSCHLAG		
9	790549314	1	DOOR WEDGE STOP	TUERKEIL PUFFER		
10	10578971	1	PERFORATED PLATE	LOCHBLECH		
11	262107714	4.1	SEALING PROFILE	DICHTUNGSPROFIL		
12	10020161	2	ROTATING BAR CPL	DREHRIEGEL KPL		
13	790550914	1	THRUST PIECE M12X26 X8CRNIS18-9;EN 1008	DRUCKSTUECK		
14	10351784	1	LOCKING BAR	RIEGEL		
17	958471514	1	BUSHING 30/20X32 POM	BUCHSE		
18	958471614	1	WASHER 25.2/32X3 POM	SCHEIBE		

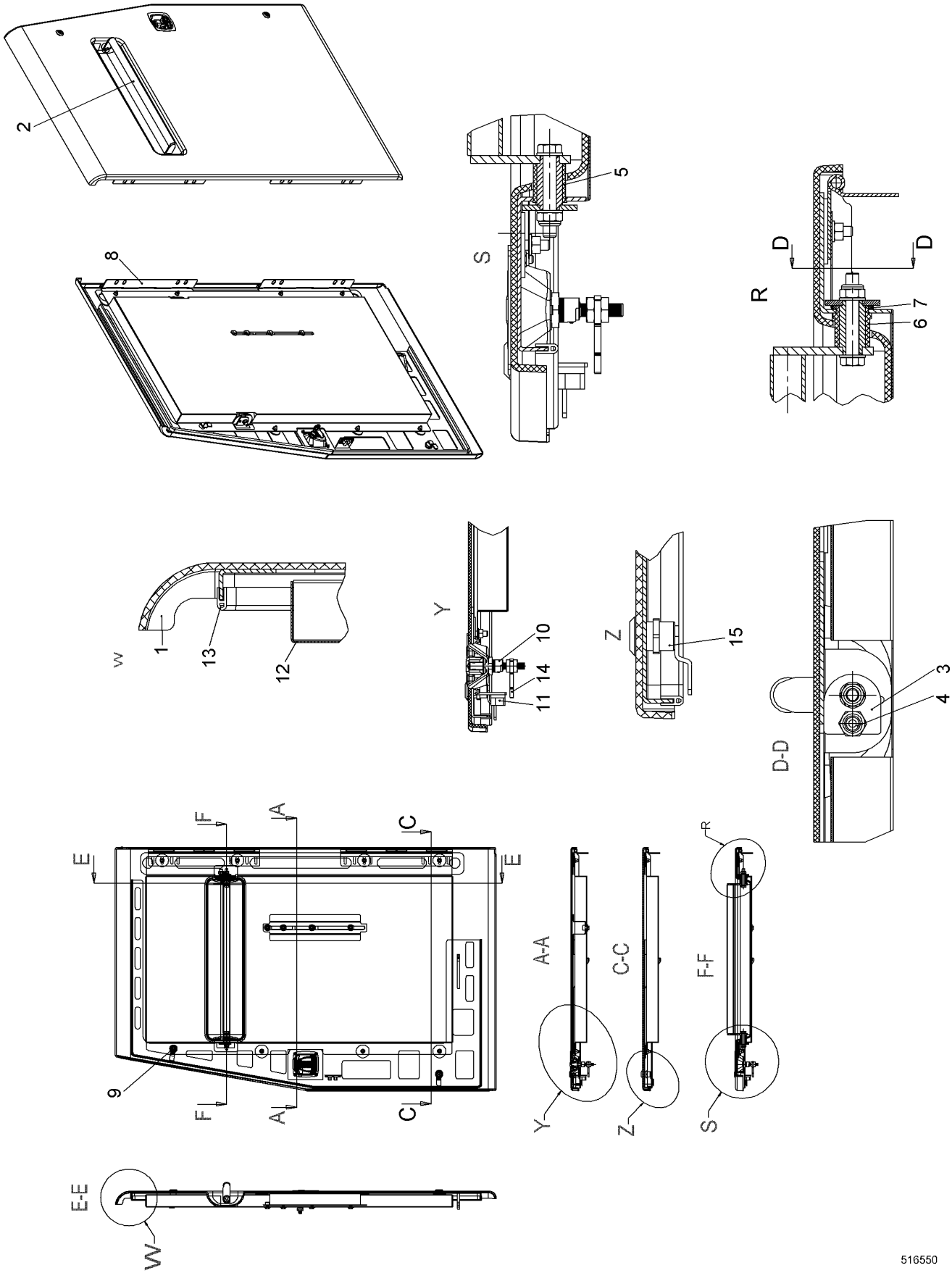
2
8
5
S
D
D
R
6 7
W
1
13
12
Y
10
11 14
Z
15
D-D
3
4
E
E
F
A
C
9
F
A
C
A-A
C-C
F-F
R
Y
Z
S
E-E
W
516550

Pos.	Item	Quantity	Description	Bezeichnung	Serie	K
1	10579397	1	DOOR	TUER		
2	10579454	1	GRIP	GRIFF		
3	990443514	2	LIMIT STOP	ANSCHLAG		
4	790550914	1	THRUST PIECE M12X26 X8CRNIS18-9;EN 1008	DRUCKSTUECK		
5	797029114	1	BUSHING 26.5/20X30 POM	BUCHSE		
6	958471514	1	BUSHING 30/20X32 POM	BUCHSE		
7	958471614	1	WASHER 25.2/32X3 POM	SCHEIBE		
8	385204714	2	HINGE	SCHARNIER		
9	10020161	1	ROTATING BAR CPL	DREHRIEGEL KPL		
10	10353879	1	DOOR LOCK	TUERSCHLOSS		
11	790549314	1	DOOR WEDGE STOP	TUERKEIL PUFFER		
12	10579423	1	PERFORATED PLATE	LOCHBLECH		
13	262107714	2.6	SEALING PROFILE	DICHTUNGSPROFIL		
14	10351784	1	LOCKING BAR	RIEGEL		
15	10581486	1	SASH LOCK	VORREIBER		

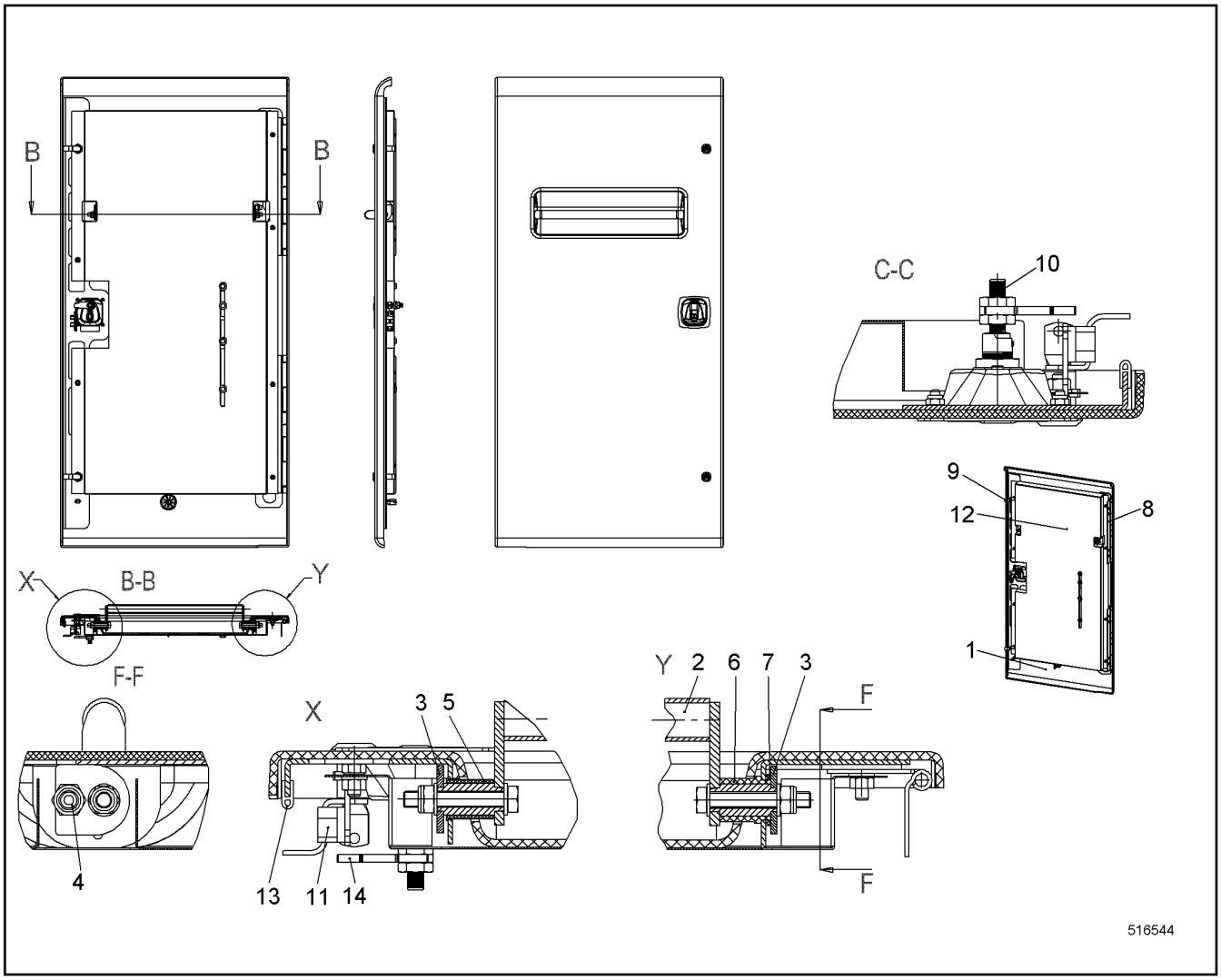

Pos.	Item	Quantity	Description	Bezeichnung	Serie	K
1	10566238	1	DOOR	TUER		
2	10579145	1	GRIP	GRIFF		
3	990443514	2	LIMIT STOP	ANSCHLAG		
4	790550914	1	THRUST PIECE M12X26 X8CRNIS18-9;EN 1008	DRUCKSTUECK		
5	797029114	1	BUSHING 26.5/20X30 POM	BUCHSE		
6	958471514	1	BUSHING 30/20X32 POM	BUCHSE		
7	958471614	1	WASHER 25.2/32X3 POM	SCHEIBE		
8	385204714	2	HINGE	SCHARNIER		
9	10020161	2	ROTATING BAR CPL	DREHRIEGEL KPL		
10	10353879	1	DOOR LOCK	TUERSCHLOSS		
11	790549314	1	DOOR WEDGE STOP	TUERKEIL PUFFER		
12	10566239	1	PERFORATED PLATE	LOCHBLECH		
13	262107714	1.35	SEALING PROFILE	DICHTUNGSPROFIL		
14	10351784	1	LOCKING BAR	RIEGEL		

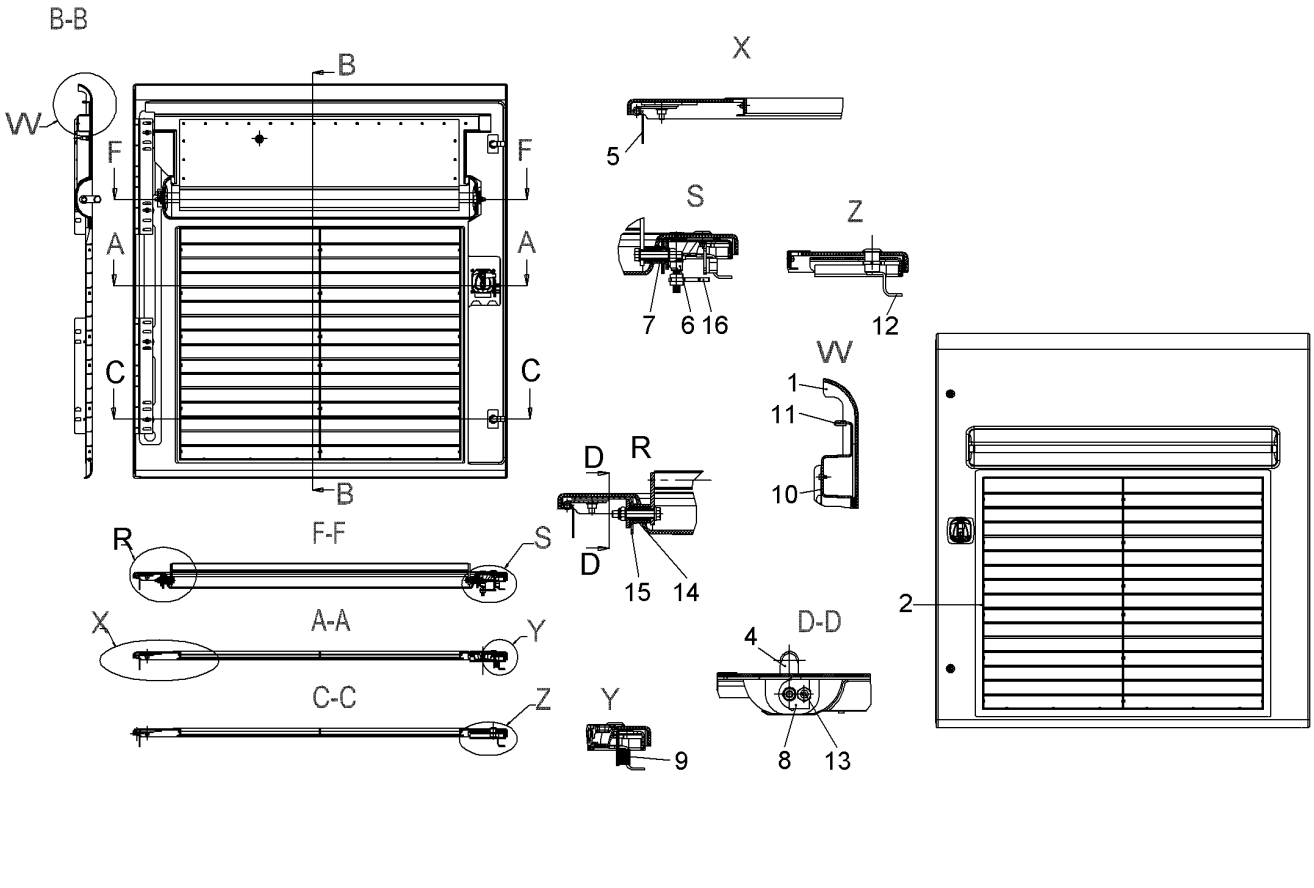

Pos.	Item	Quantity	Description	Bezeichnung	Serie	K
1	10565777	1	DOOR	TUER		
2	10565889	1	FAN COVER	LUEFTERABDECKUNG		
4	10020487	1	GRIP	GRIFF		
5	385204714	2	HINGE	SCHARNIER		
6	10353879	1	DOOR LOCK	TUERSCHLOSS		
7	797029114	1	BUSHING 26.5/20X30 POM	BUCHSE		
8	990443514	2	LIMIT STOP	ANSCHLAG		
9	790549314	1	DOOR WEDGE STOP	TUERKEIL PUFFER		
10	10565879	1	PERFORATED PLATE	LOCHBLECH		
11	262107714	2.8	SEALING PROFILE	DICHTUNGSPROFIL		
12	10020161	2	ROTATING BAR CPL	DREHRIEGEL KPL		
13	790550914	1	THRUST PIECE M12X26 X8CRNIS18-9;EN 1008	DRUCKSTUECK		
14	958471514	1	BUSHING 30/20X32 POM	BUCHSE		
15	958471614	1	WASHER 25.2/32X3 POM	SCHEIBE		
16	10351784	1	LOCKING BAR	RIEGEL		

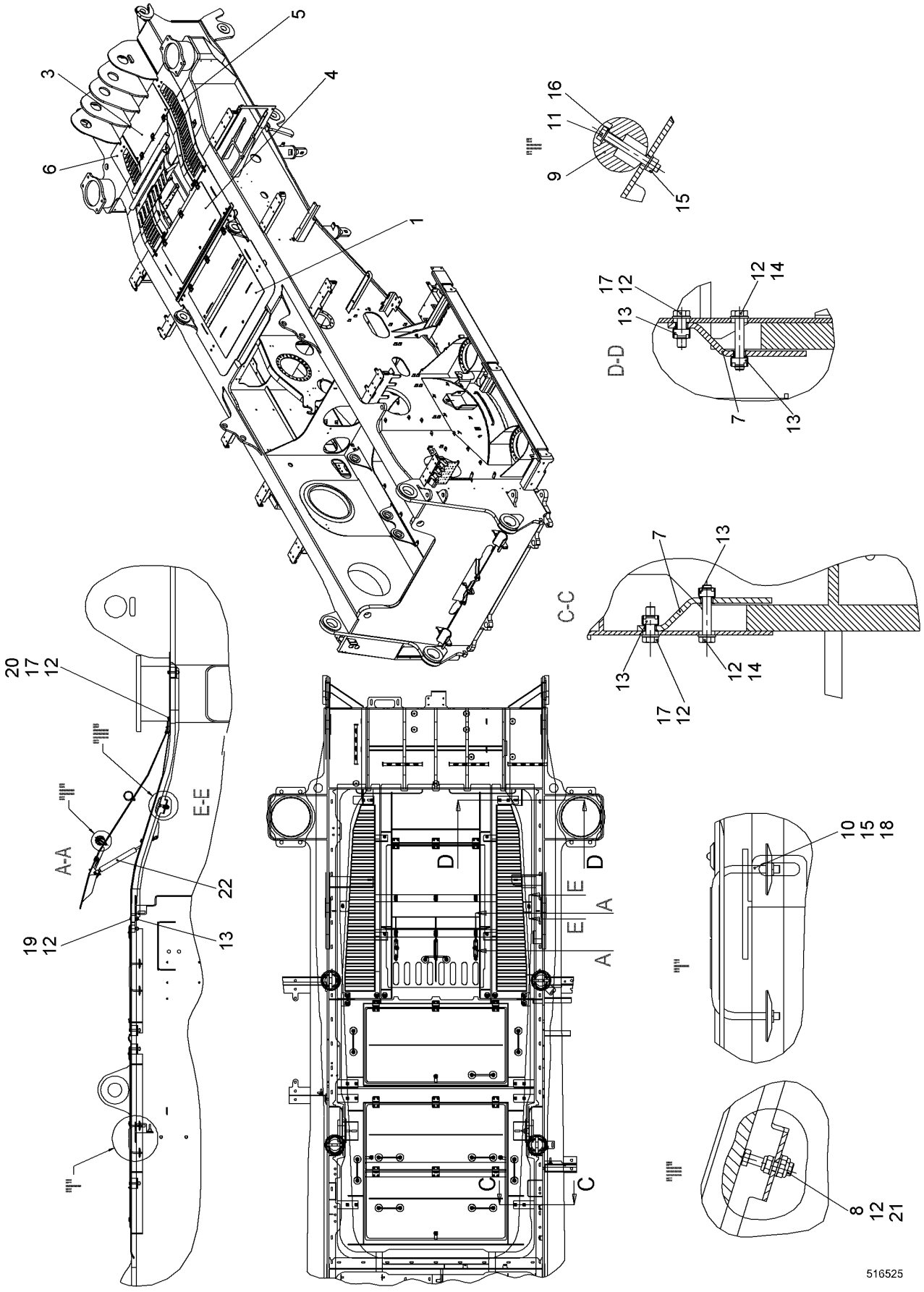

8.7.2015 516525 LIEBHERR	**138281_ETK_001** **MOTOR COWLING** **MOTORABDECKUNG**	❑ 297 (1/2) **10 54 591 0**

Pos.	Item	Quantity	Description	Bezeichnung	Serie	K
1	10563099	1	ROOF	DACH		
3	10545968	1	ROOF	DACH		
4	10545969	1	ROOF	DACH		
5	10545970	1	ROOF	DACH		
6	10546335	1	ROOF	DACH		
7	10349206	8	BRACKET	BUEGEL		
8	10540494	4	HEX NUT ISO 10511 M10 A4	SECHSKANTMUTTER		
9	10546407	2	STRIP	LEISTE		
10	958478414	10	BRACKET	BUEGEL		
11	10331507	6	HEX SCREW ISO 4017 M8X65 A4-70	SECHSKANTSCHRAUBE		
12	420001114	36	WASHER ISO 7089 10 A4	SCHEIBE		
13	413013314	24	CAGE NUT M10-R-140-62	KAEFIGMUTTER		
14	10539959	8	HEX SCREW ISO 4017 M10X60 A4-70	SECHSKANTSCHRAUBE		
15	411515014	26	HEX NUT ISO 4032 M8 A4-70	SECHSKANTMUTTER		
16	420001014	12	WASHER ISO 7089 8 A4	SCHEIBE		
17	406509314	12	HEX SCREW ISO 4017 M10X35 A4-70	SECHSKANTSCHRAUBE		
18	10098157	20	DISH	TELLER		
19	406512014	8	HEX SCREW ISO 4017 M10X45 A4-70	SECHSKANTSCHRAUBE		
20	411514614	4	HEX NUT ISO 4032 M10 A4-70	SECHSKANTMUTTER		
21	406518614	2	HEX SCREW ISO 4017 M10X50 A4-70	SECHSKANTSCHRAUBE		
22	592323514	3	GAS SPRING	GASFEDER		

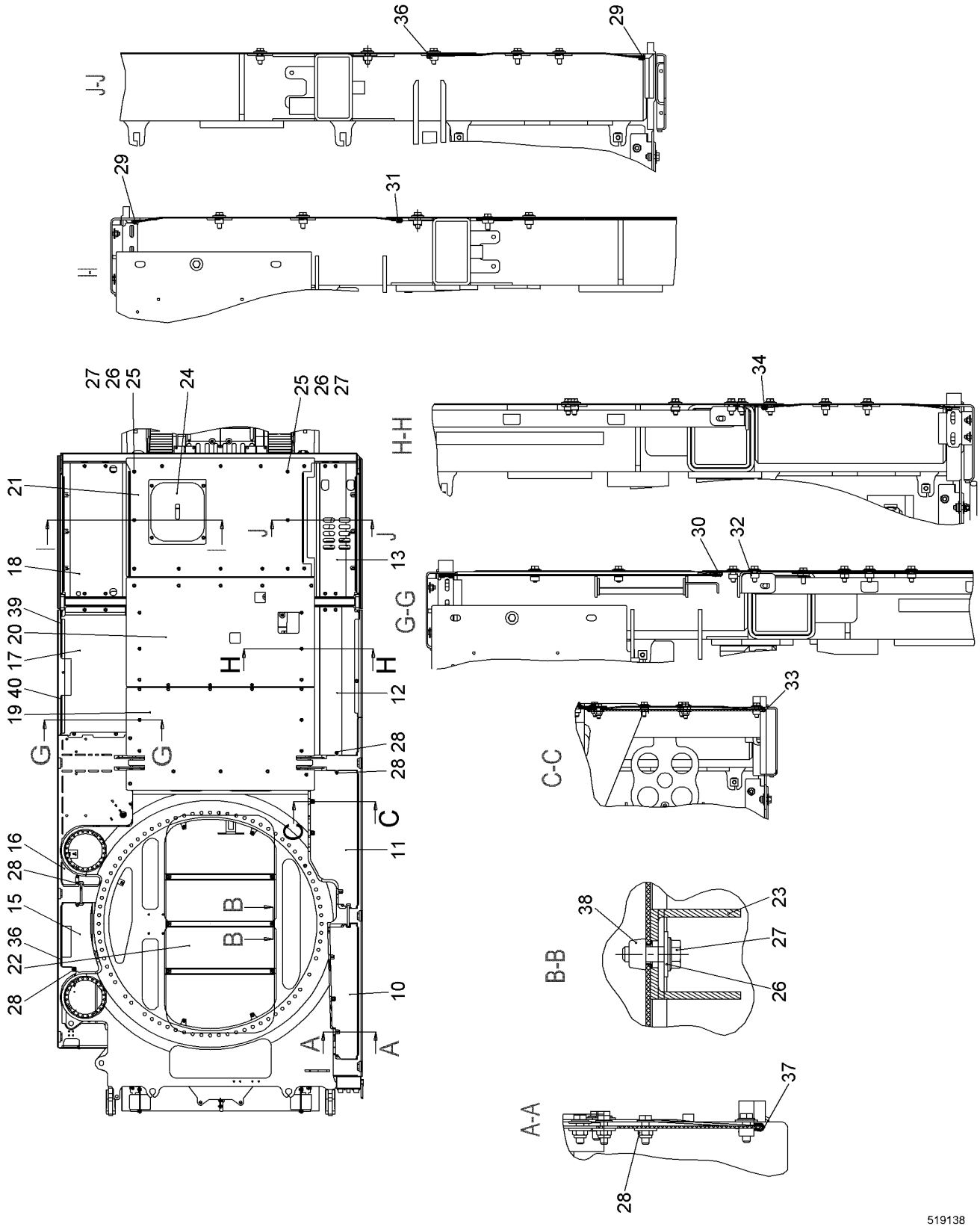

8.7.2015 519138	**138281_ETK_001**	299 (1/2)
LIEBHERR	**COVER UNDERSIDE** **ABDECKUNG UNTERSEITE**	**11 24 922 2**

Pos.	Item	Quantity	Description	Bezeichnung	Serie	K
10	10560687	1	SHEET	PLATTE		
11	10560691	1	SHEET	PLATTE		
12	10560692	1	SHEET	PLATTE		
13	11249223	1	SHEET	PLATTE		
15	10583559	1	SHEET	PLATTE		
16	10560690	1	SHEET	PLATTE		
17	10560688	1	SHEET	PLATTE		
18	11249224	1	SHEET	PLATTE		
19	10583611	1	SHEET	PLATTE		
20	10583612	1	SHEET	PLATTE		
21	11249225	1	SHEET	PLATTE		
22	10098789	1	SHEET	PLATTE		
23	11225259	3	U-PROFILE	U-PROFIL		
24	11249678	1	SHEET	PLATTE		
25	485550014	2	CAGE NUT M10-RR-140-62	KAEFIGMUTTER		
26	10540511	89	WASHER ISO 7093-1 10 A4	SCHEIBE		
27	406550714	84	HEX SCREW EN 1665 M10X30 A2-70	SECHSKANTSCHRAUBE		
28	10540494	12	HEX NUT ISO 10511 M10 A4	SECHSKANTMUTTER		
29	226016702	2.18	EDGE PROTECTION METER WARE	KANTENSCHUTZ METERWARE		
30	226016702	1.11	EDGE PROTECTION METER WARE	KANTENSCHUTZ METERWARE		
31	226016702	1.19	EDGE PROTECTION METER WARE	KANTENSCHUTZ METERWARE		
32	485549914	53	CAGE NUT M10-RR-140-47	KAEFIGMUTTER		
33	226016702	1.24	EDGE PROTECTION METER WARE	KANTENSCHUTZ METERWARE		
34	226016702	1.29	EDGE PROTECTION METER WARE	KANTENSCHUTZ METERWARE		
35	226016702	0.57	EDGE PROTECTION METER WARE	KANTENSCHUTZ METERWARE		
36	226016702	0.85	EDGE PROTECTION METER WARE	KANTENSCHUTZ METERWARE		
37	226016702	1.2	EDGE PROTECTION METER WARE	KANTENSCHUTZ METERWARE		
38	413003308	18	CAGE NUT M10-R-140-32	KAEFIGMUTTER		
39	226016702	0.36	EDGE PROTECTION METER WARE	KANTENSCHUTZ METERWARE		
40	226016702	0.35	EDGE PROTECTION METER WARE	KANTENSCHUTZ METERWARE		

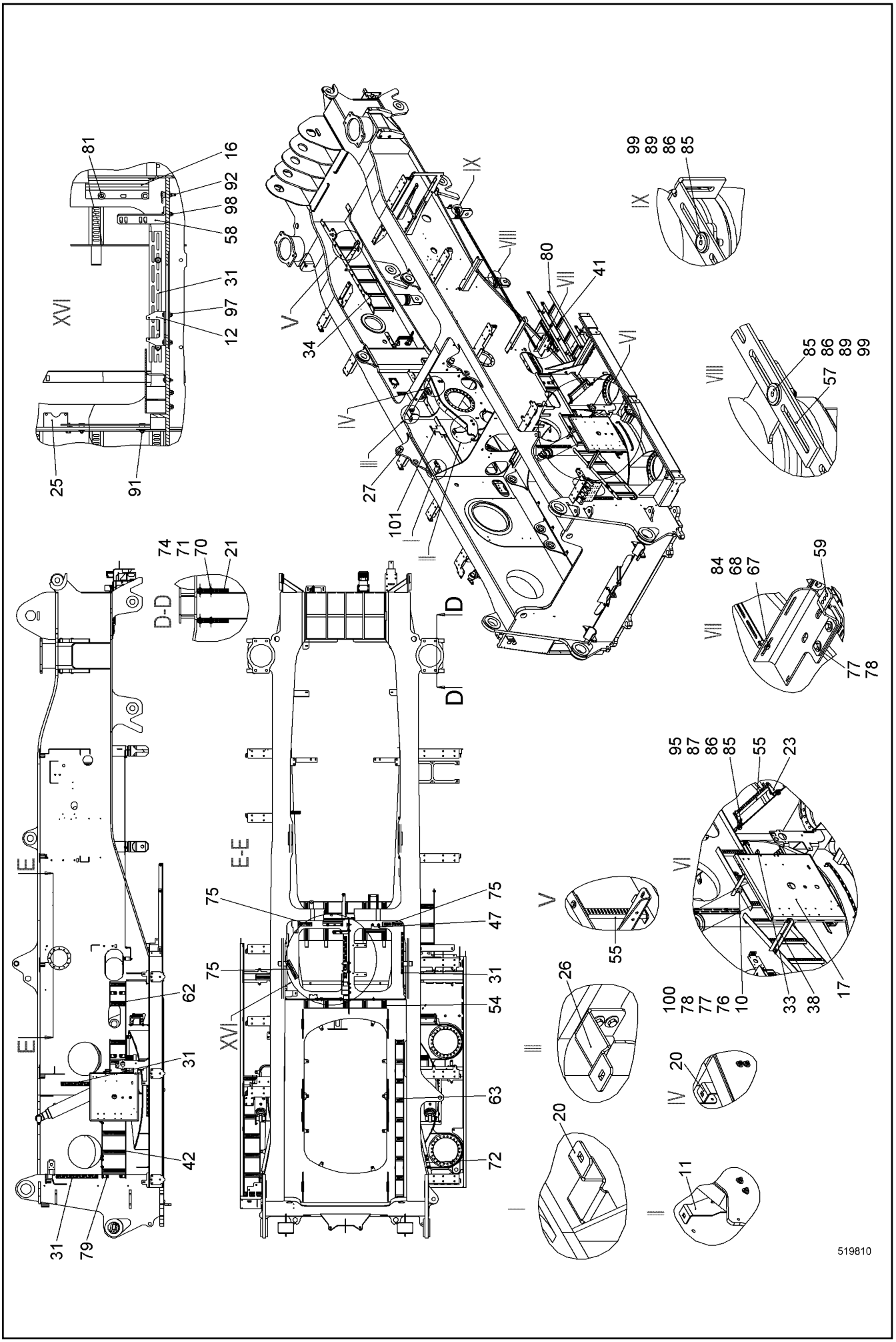
81
16
92
98
58
31
97
12
XVI
25
91
V
34
IX
VIII
80
VII
41
VI
IV
III
27
101
II
99
89
86
85
IX
85
86
89
99
VIII
57
74
71
70
21
D-D
D
D
84
68
67
59
VII
77
78
95
87
86
85
55
23
VI
100
78
77
76
10
33
38
17
E
E
62
31
42
31
79
E-E
75
75
47
75
31
54
XVI
63
72
V
55
26
III
20
II
20
IV
11
519810

Pos.	Item	Quantity	Description	Bezeichnung	Serie	K
10	956009714	1	INTERMEDIATE PART	ZWISCHENSTUECK		
11	10575981	1	BRACKET ST.CONST.	BUEGEL SCHWK		
12	954598503	2	VALVE HOLDER	VENTILHALTER		
13	10575967	1	BRACKET	BUEGEL		
14	10575984	1	BRACKET ST.CONST.	BUEGEL SCHWK		
15	10575968	1	BRACKET	BUEGEL		
16	949401114	1	HOSE HOLDER ST.CONST. CPL	SCHLAUCHHALTER SCHWK KPL		
17	10575966	1	VALVE PLATE	VENTILPLATTE		
18	10575969	1	BRACKET	BUEGEL		
19	10576104	1	BRACKET ST.CONST.	BUEGEL SCHWK		
20	10575985	2	BRACKET	BUEGEL		
21	10349434	4	STRIP	LEISTE		
22	11247375	1	BRACKET	BUEGEL		
23	10575970	8	BRACKET	BUEGEL		
24	949758314	1	BRACKET	BUEGEL		
25	967313703	1	BRACKET	BUEGEL		
26	10579757	1	BRACKET	BUEGEL		
27	970883003	2	PIN	BOLZEN		
28	11247029	1	SLOTTED STRIP	SCHLITZBAND		
29	11247791	1	BRACKET	BUEGEL		
30	10575980	3	HOLDER	HALTER		
31	11247792	9	SLOTTED STRIP	SCHLITZBAND		
32	11247799	2	SLOTTED STRIP	SCHLITZBAND		
33	11247808	1	BRACKET	BUEGEL		
35	11265945	1	BRACKET	BUEGEL		
37	10575971	3	BRACKET	BUEGEL		
38	11247011	1	BRACKET	BUEGEL		
39	10445651	2	BRACKET	BUEGEL		
42	11246919	1	CABLE LADDER ST.CONST.	KABELLEITER SCHWK		
43	10592619	1	BRACKET	BUEGEL		
44	10592621	1	BRACKET	BUEGEL		
46	10599571	1	WP	WP		
47	10599614	1	C-RAIL ST.CONST.	C-SCHIENE SCHWK		
48	11247158	1	CABLE LADDER ST.CONST.	KABELLEITER SCHWK		
49	10599854	1	WP	WP		
50	11247207	1	CABLE LADDER ST.CONST.	KABELLEITER SCHWK		
52	11244040	2	SLOTTED STRIP	SCHLITZBAND		
57	11234375	2	SLOTTED STRIP	SCHLITZBAND		
58	11234405	1	BRACKET	BUEGEL		
59	11234413	1	BRACKET	BUEGEL		

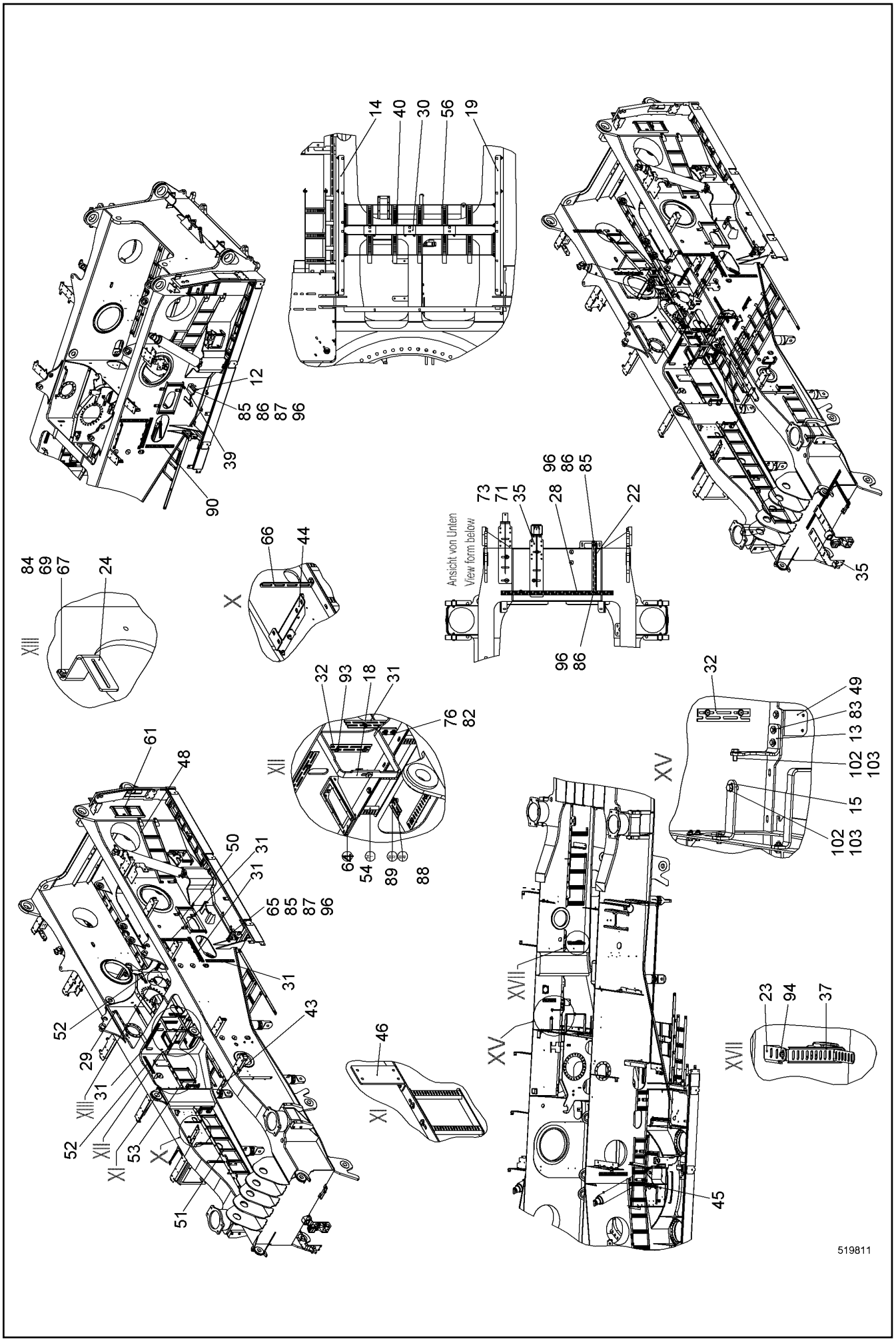
14
40
30
56
19
12
85
86
87
96
39
90
35
96
86
85
73
71
35
28
22
Ansicht von Unten
View form below
96
86
84
69
67
24
XIII
66
44
X
32
93
18
31
76
82
XII
64
54
89
88
61
48
50
31
31
65
85
87
96
31
52
43
29
31
XIII
52
XII
XI
53
X
51
46
XI
XV
XVII
45
32
49
83
13
102
103
15
102
103
XV
23
94
37
XVIII
519811

Pos.	Item	Quantity	Description	Bezeichnung	Serie	K
61	11247023	1	CABLE LADDER ST.CONST.	KABELLEITER SCHWK		
62	11247131	1	CABLE LADDER ST.CONST.	KABELLEITER SCHWK		
64	954485303	1	CONSOLE	KONSOLE		
65	11265089	1	CABLE LADDER ST.CONST.	KABELLEITER SCHWK		
67	10540500	6	WASHER ISO 7093-1 6 A4	SCHEIBE		
68	406532614	1	HEX SCREW ISO 4017 M6X20 A4-70	SECHSKANTSCHRAUBE		
69	406551114	2	HEX SCREW ISO 4017 M6X35 A4-70	SECHSKANTSCHRAUBE		
70	10540495	8	HEX NUT ISO 10511 M12 A4	SECHSKANTMUTTER		
71	10540512	11	WASHER ISO 7093-1 12 A4	SCHEIBE		
72	11257849	1	BRACKET	BUEGEL		
73	406517314	3	HEX SCREW ISO 4017 M12X30 A4-70	SECHSKANTSCHRAUBE		
74	10538830	8	HEX SCREW ISO 4017 M12X80 A4-70	SECHSKANTSCHRAUBE		
75	11257851	3	BRACKET	BUEGEL		
76	10540494	83	HEX NUT ISO 10511 M10 A4	SECHSKANTMUTTER		
77	10540511	125	WASHER ISO 7093-1 10 A4	SCHEIBE		
78	420001114	53	WASHER ISO 7089 10 A4	SCHEIBE		
79	406511914	24	HEX SCREW ISO 4017 M10X25 A4-70	SECHSKANTSCHRAUBE		
80	406511614	46	HEX SCREW ISO 4017 M10X30 A4-70	SECHSKANTSCHRAUBE		
81	406509314	23	HEX SCREW ISO 4017 M10X35 A4-70	SECHSKANTSCHRAUBE		
82	406527814	8	HEX SCREW ISO 4017 M10X40 A4-70	SECHSKANTSCHRAUBE		
83	406512014	1	HEX SCREW ISO 4017 M10X45 A4-70	SECHSKANTSCHRAUBE		
84	10540492	3	HEX NUT ISO 10511 M6 A4	SECHSKANTMUTTER		
85	10540493	37	HEX NUT ISO 10511 M8 A4	SECHSKANTMUTTER		
86	10540510	34	WASHER ISO 7093-1 8 A4	SCHEIBE		
87	420001014	26	WASHER ISO 7089 8 A4	SCHEIBE		
88	421700508	48	WASHER DIN 7989 11 ST	SCHEIBE		
89	460022703	34	WASHER EN 14399-6 12 C45	SCHEIBE		
90	408606414	14	COUNTERSUNK SCREW DIN 7991 M8X25 A4-7	SENKSCHRAUBE		
91	408600808	2	COUNTERSUNK SCREW ISO 10642 M8X40 8.8	SENKSCHRAUBE		
92	4002655	10	COUNTERSUNK SCREW ISO 10642 M8X60 8.8	SENKSCHRAUBE		
93	10349756	6	COUNTERSUNK SCREW ISO 10642 M8X35 A4	SENKSCHRAUBE		
94	406518814	8	HEX SCREW ISO 4017 M8X20 A4-70	SECHSKANTSCHRAUBE		
95	406501414	2	HEX SCREW ISO 4017 M8X25 A4-70	SECHSKANTSCHRAUBE		
96	406501314	10	HEX SCREW ISO 4017 M8X30 A4-70	SECHSKANTSCHRAUBE		
97	406517614	2	HEX SCREW ISO 4017 M8X35 A4-70	SECHSKANTSCHRAUBE		
98	406532914	1	HEX SCREW ISO 4017 M8X40 A4-70	SECHSKANTSCHRAUBE		
99	408600708	2	COUNTERSUNK SCREW ISO 10642 M8X30 8.8	SENKSCHRAUBE		
100	10539293	1	HEX SCREW ISO 4017 M10X75 A4-70	SECHSKANTSCHRAUBE		
101	954229003	1	WP	WP		
102	10544172	2	WASHER ISO 7089 16	SCHEIBE		
103	10539317	2	HEX SCREW ISO 4017 M16X35 10.9	SECHSKANTSCHRAUBE		

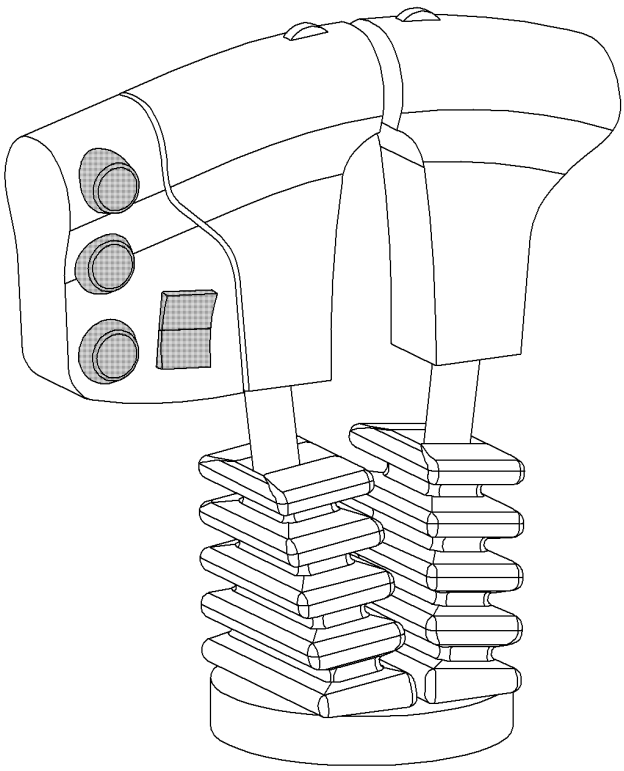

514839

Pos.	Item	Quantity	Description	Bezeichnung	Serie	K
10	11214820	1	MASTER SWITCH	MEISTERSCHALTER		

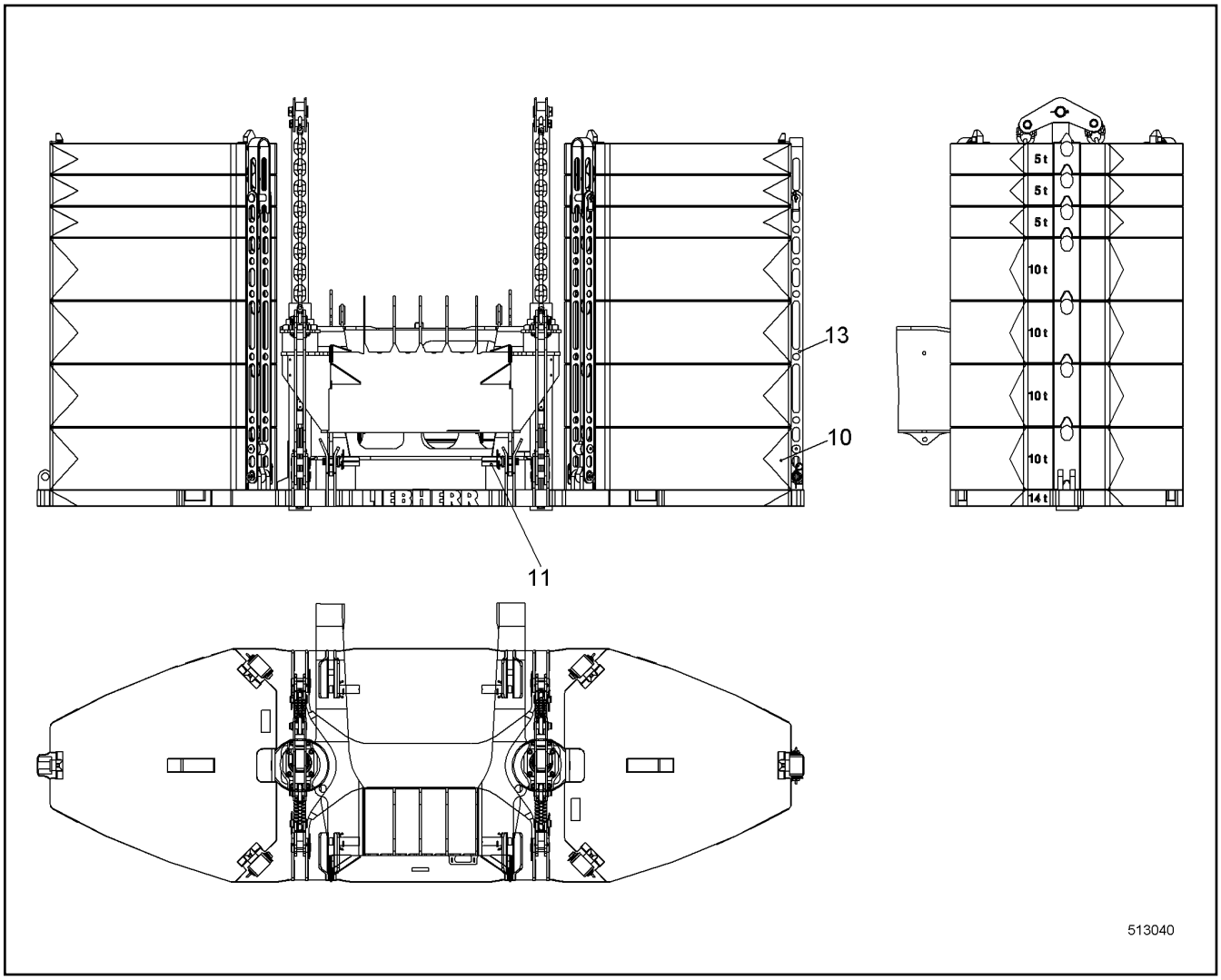

Pos.	Item	Quantity	Description	Bezeichnung	Serie	K
10	992757214	1	BASEPLATE CPL ⇨ ❑ 307	GRUNDPLATTE KPL		
11	10526560	1	MOUNTING PARTS ⇨ ❑ 308	MONTAGETEILE		
13	992980314	1	LASHING BALLAST ⇨ ❑ 309	VERZURRUNG BALLAST		

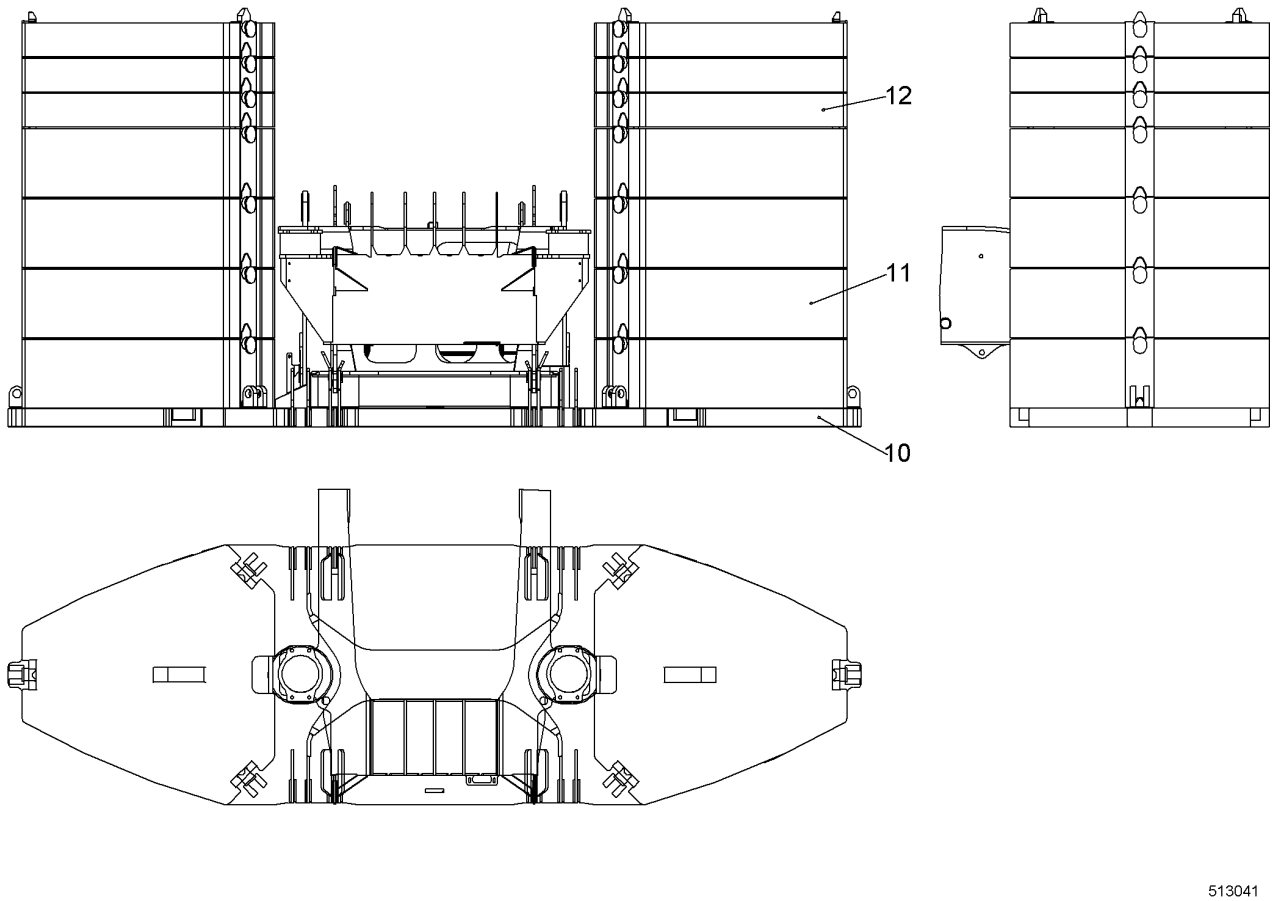

Pos.	Item	Quantity	Description	Bezeichnung	Serie	K
10	992741214	1	BASEPLATE ST.CONST.	GRUNDPLATTE SCHWK		
11	10349440	8	ADDITIONAL BALLAST	ZUSATZBALLAST		
12	10349439	6	ADDITIONAL BALLAST	ZUSATZBALLAST		

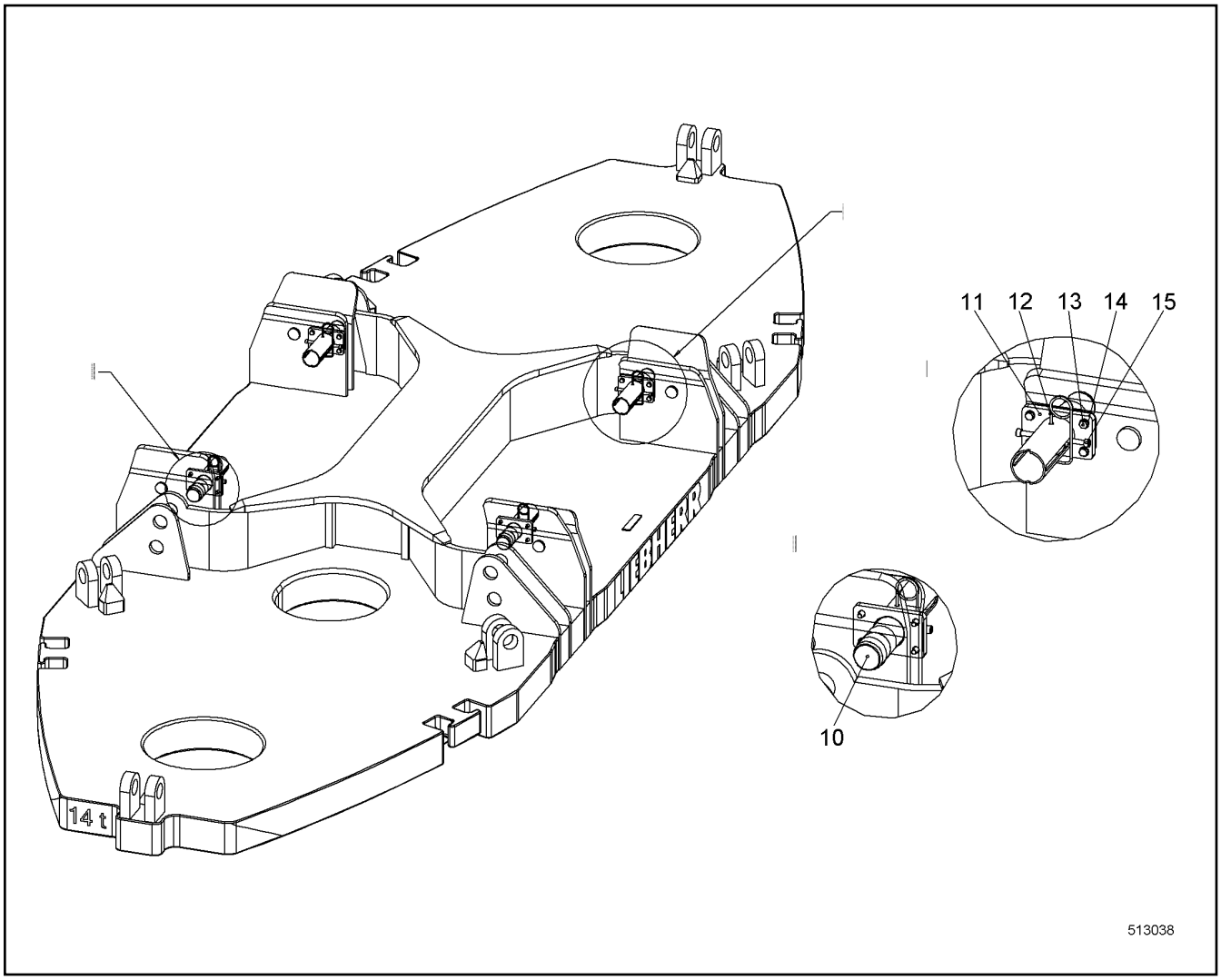

Pos.	Item	Quantity	Description	Bezeichnung	Serie	K
10	957831614	4	PIN 65X193 LHRD900-40;10019758	BOLZEN		
11	992757514	4	CONSOLE	KONSOLE		
12	433105414	4	RETAINING SPRING 4.5 MM	SICHERUNGSFEDER		
13	406511614	16	HEX SCREW ISO 4017 M10X30 A4-70	SECHSKANTSCHRAUBE		
14	420001114	16	WASHER ISO 7089 10 A4	SCHEIBE		
15	10539505	8	SOCKET HEAD SCREW ISO 4762 M10X60 A4-7	ZYLINDERSCHRAUBE		

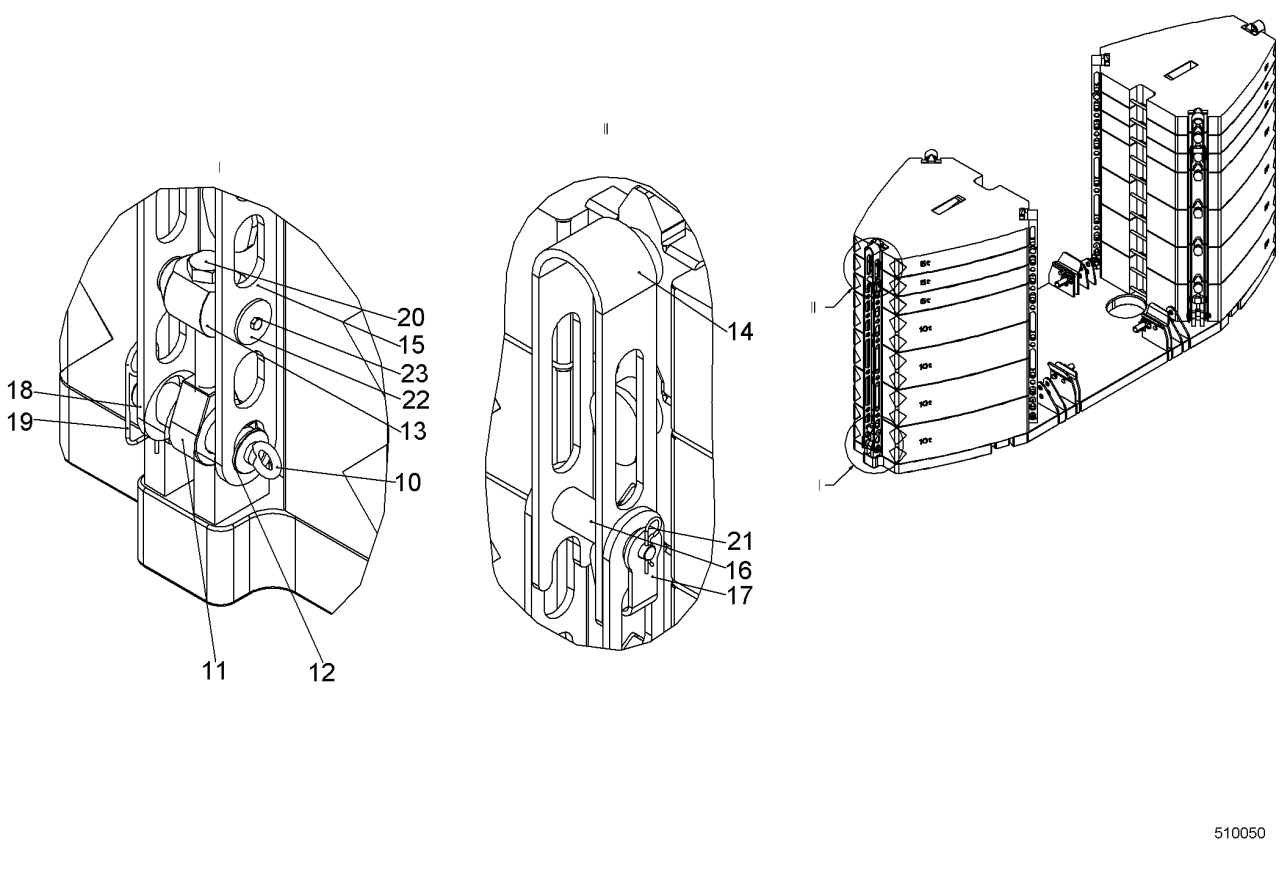

Pos.	Item	Quantity	Description	Bezeichnung	Serie	K
10	402600514	6	RING BOLT DIN 580 M16 C15E;EN 10084	RINGSCHRAUBE		
11	959912014	6	BUTT STRAP	LASCHE		
12	959912114	6	PIN 75X240 LHRD900-40;10019758	BOLZEN		
13	959912214	6	PIN 110X198 LHRD900-40;10019758	BOLZEN		
14	992982314	6	MOUNTING LINK ST. CONST.	LASCHE SCHWK		
15	959912514	12	BUTT STRAP	LASCHE		
16	959912614	6	PIN	BOLZEN		
17	959912714	6	LOCKING PLATE	SICHERUNGSBLECH		
18	421103614	6	WASHER DIN EN 28738 65 ST;	SCHEIBE		
19	433105008	6	RETAINING SPRING DIN 2194 6MM FS	SICHERUNGSFEDER		
20	406144514	6	HEX SCREW ISO 4014 M36X230 8.8	SECHSKANTSCHRAUBE		
21	433206314	6	SPRING PLUG DIN 11024 5	FEDERSTECKER		
23	406517714	12	HEX SCREW ISO 4017 M12X20 A4-70	SECHSKANTSCHRAUBE		

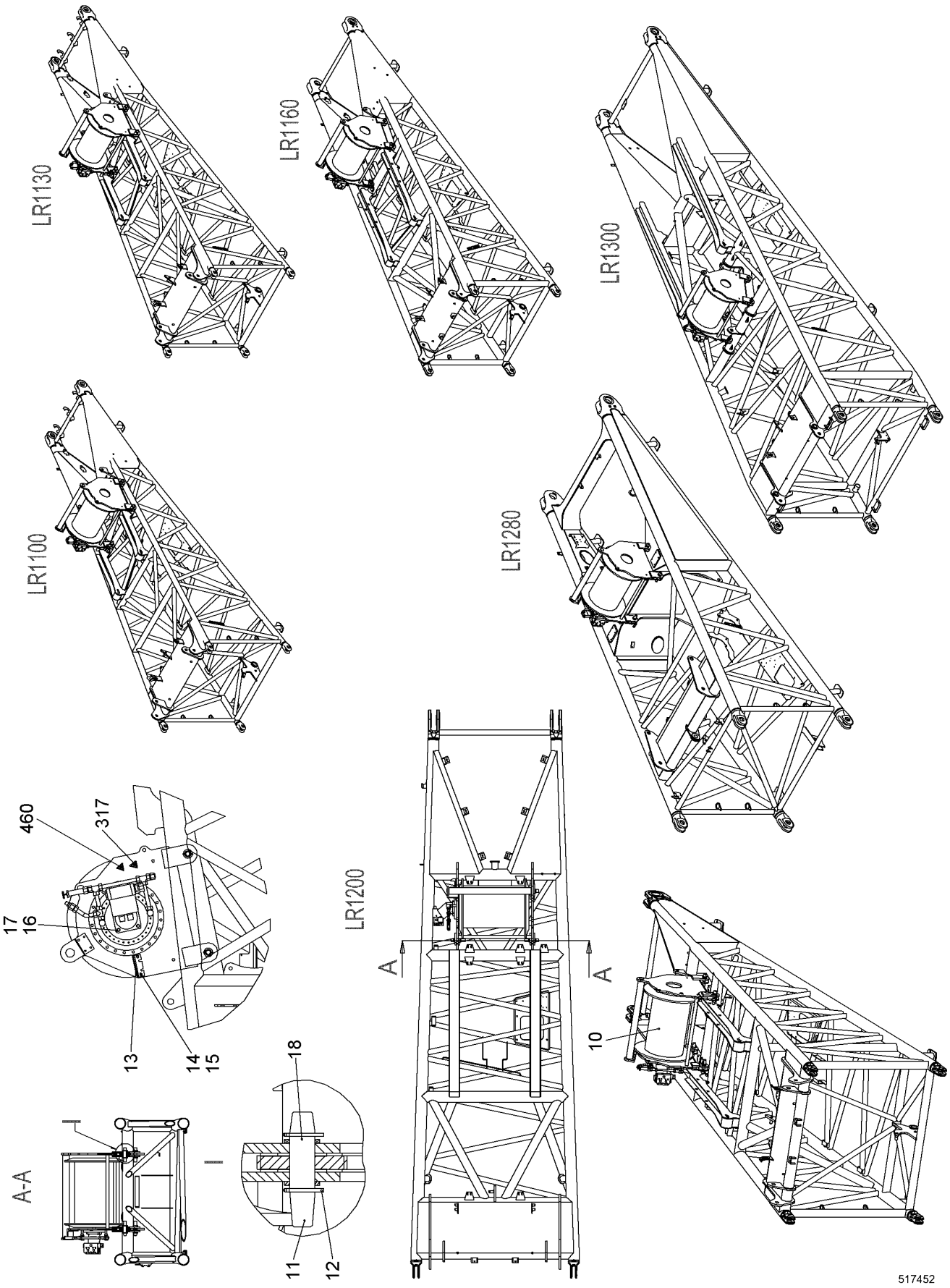
LR1130
LR1160
LR1300
LR1100
LR1280
LR1200
460
317
17
16
13
14
15
18
11
12
A-A
I
A
10
517452

Pos.	Item	Quantity	Description	Bezeichnung	Serie	K
2	10519698	1	NEEDLE LUFFING WINCH HYDR ⇨ ❑ 312	NADELEINZIEHWINDE HYDR		
3	10226573	1	WIRING HARNESS	KABELSTRANG		
4	993324114	1	HOSE LIST ⇨ ❑ 314	SCHLAUCHLISTE		
10	969624801	1	WINCH ⇨ ❑ 315	WINDE		
11	10351894	4	PIN 40X182 LHRD900-40;10019758	BOLZEN		
12	433006714	8	SPLIT PIN ISO 1234 5X50	SPLINT		
13	954598503	1	VALVE HOLDER	VENTILHALTER		
14	420001014	2	WASHER ISO 7089 8 A4	SCHEIBE		
15	406501414	2	HEX SCREW ISO 4017 M8X25 A4-70	SECHSKANTSCHRAUBE		
16	425221314	4	SERRATED LOCK WASHER DIN 6798 13	FAECHERSCHEIBE		
17	4600706	4	HEX SCREW ISO 4017 M12X45 10.9	SECHSKANTSCHRAUBE		
18	421103014	8	WASHER DIN EN 28738 40 ST	SCHEIBE		
317	773195214	1	SIGN	SCHILD		
460	773195614	2	NAMEPLATE UVV	SCHILD UVV		

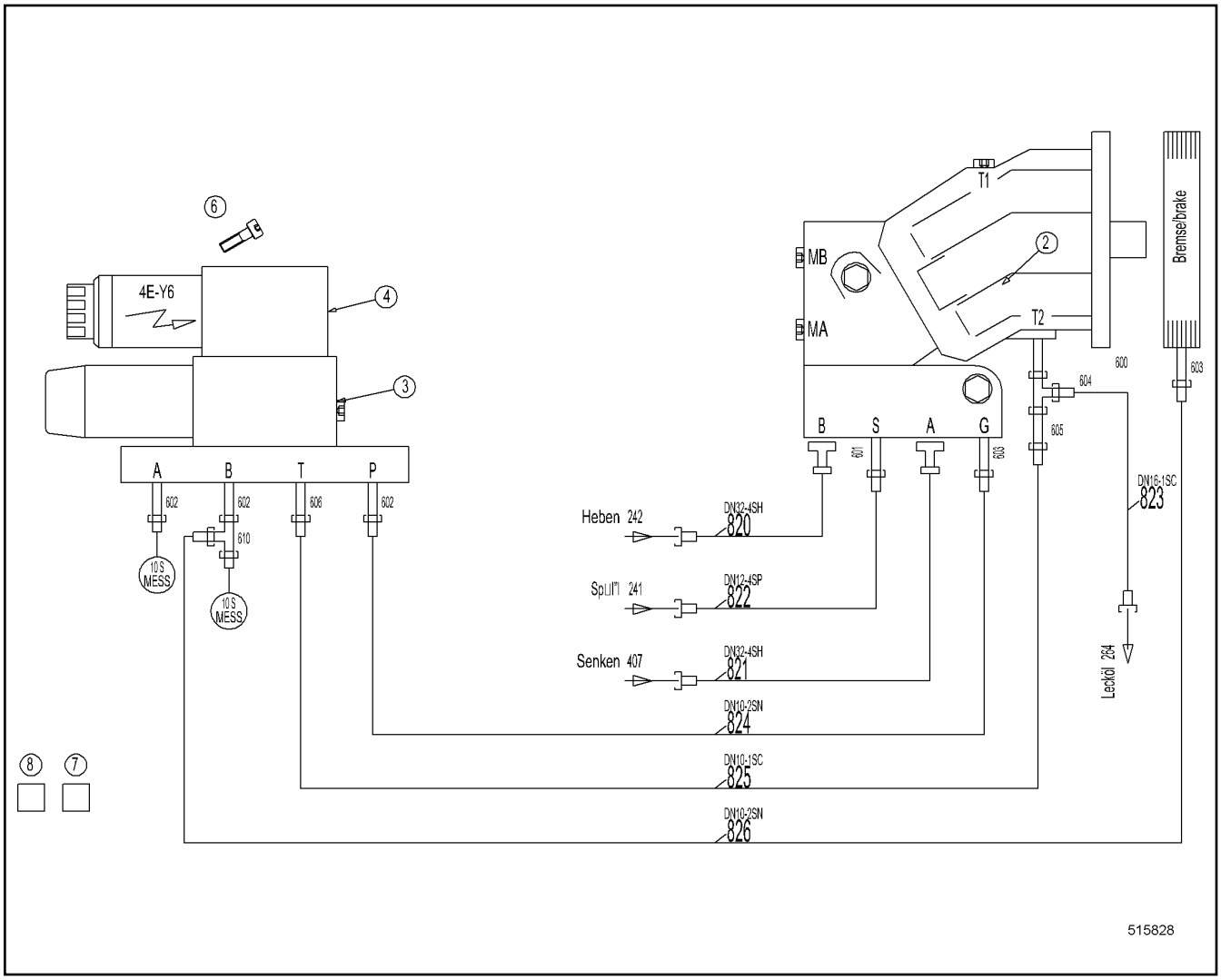

Pos.	Item	Quantity	Description	Bezeichnung	Serie	K
2	512252714	1	OIL MOTOR ⇨ ❑ 313	OELMOTOR		
3	511476914	1	PRESSURE REDUCTION VALVE	DRUCKREDUZIERVENTIL		
4	511432714	1	DIRECTIONAL CONTROL VALVE	WEGEVENTIL		
5	510662914	1	CONNECTING PLATE	ANSCHLUSSPLATTE		
6	404302914	4	SOCKET HEAD SCREW ISO 4762 M5X90 10.9	ZYLINDERSCHRAUBE		
7	7621780	10	LASHING STRAP	ZURRGURT		
8	10020519	6	LASHING STRAP	ZURRGURT		
201	510694514	2	GAUGE CONNECTION	MESSSTUTZEN		
600	471034714	1	FLANGE JOINT	VERSCHRAUBUNG		
601	471033014	1	FLANGE JOINT	VERSCHRAUBUNG		
602	471032808	3	FLANGE JOINT	VERSCHRAUBUNG		
603	471004614	2	FLANGE JOINT	VERSCHRAUBUNG		
604	247128502	1	FLANGE JOINT	VERSCHRAUBUNG		
605	247040302	1	FLANGE JOINT	VERSCHRAUBUNG		
606	247009402	1	FLANGE JOINT	VERSCHRAUBUNG		
610	7367776	1	FLANGE JOINT	VERSCHRAUBUNG		
611	510586914	4	FLANGE HALF	FLANSCHHAELFTE		
612	10490781	2	PLAIN COMPRESSION RING	RECHTECKRING		
613	4600366	8	HEX SCREW ISO 4017 M12X40 10.9	SECHSKANTSCHRAUBE		

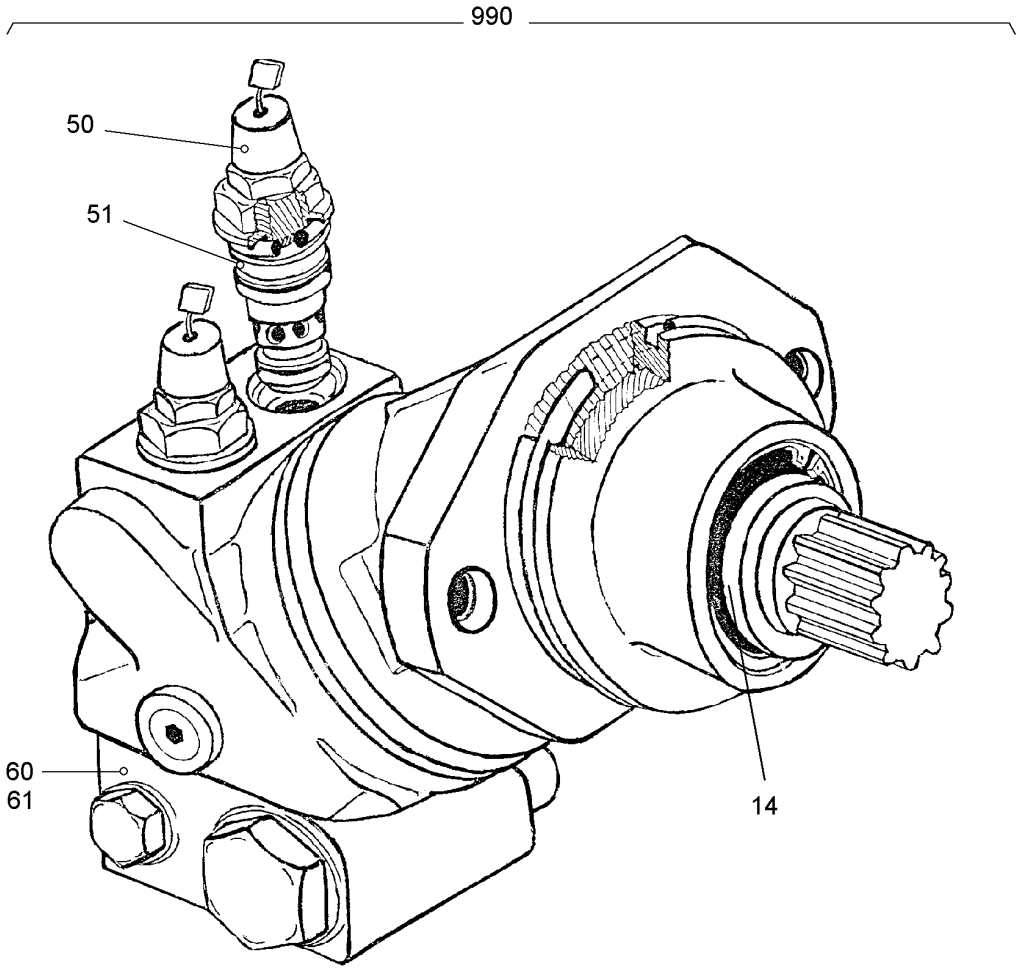

Pos.	Item	Quantity	Description	Bezeichnung	Serie	K
14	10564158	1	SHAFT SEAL	WELLENDICHTRING		
50	511619614	2	PRESSURE LIMITING VALVE	DRUCKBEGRENZUNGSVENTIL		
51	511493914	2	SEALING SET	DS		
60	10227399	1	BRAKE VALVE	BREMSVENTIL		
61	512259514	1	SEALING SET	DS		
990	512259414	1	SEALING SET	DS		

ACHTUNG !
ATTENTION !
ATTENTION !
ATENCIÓN !
ATENÇÃO !
ВНИМАНИЕ

Für Schlauchbestellungen kann über die Schlauchnummer, in der entsprechenden Schlauchliste, die Identnummer festgestellt werden.

For ordering flexible hoses you can find the identification number through the hose-number in the corresponding hose-list.

Pour des ordres de tuyau flexible le nombre d'identification on voit dans la liste de tuyau flexible correspondente.

Para el pedido de manguera, indicar el número de identificación de la manguera de la lista respectiva.

Para se encomendar uma mangueira, consulte o número de identificaçao na respectiva lista de mangueiras.

Для оформления заказов на шланги/рукавы идент. № может быть определен при помощи номера шланга/рукава, указанного в соотетствующем перечне шлангов/рукавов.

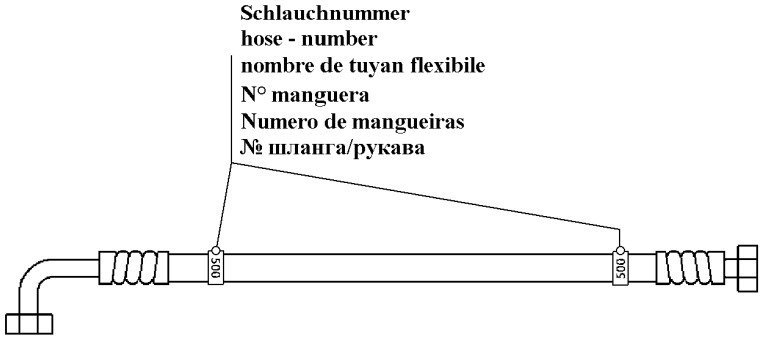

500000

Pos.	Item	Quantity	Description	Bezeichnung	Serie	K
820	996625314	1	HOSE CPL	SCHLAUCH KPL		
821	996625414	1	HOSE CPL	SCHLAUCH KPL		
822	993623814	1	HOSE CPL	SCHLAUCH KPL		
823	928861314	1	HOSE CPL	SCHLAUCH KPL		
824	918882614	1	HOSE CPL	SCHLAUCH KPL		
825	928326514	1	HOSE CPL	SCHLAUCH KPL		
826	918870914	1	HOSE CPL	SCHLAUCH KPL		

OHNE BILD
WITHOUT ILLUSTRATION
SANS PLANCHE
SIN FIG.
SEM ILUSTRAÇÃO
БЕЗ ИЗОБРАЖЕНИЯ

600000

Pos.	Item	Quantity	Description	Bezeichnung	Serie	K
20	969654301	1	WINCH FRAME ⇨ ❑ 316	WINDENRAHMEN		
980	933675501	1	OIL-GAUGING INSTRUMENT	OELMESSEINRICHTUNG		

OHNE BILD
WITHOUT ILLUSTRATION
SANS PLANCHE
SIN FIG.
SEM ILUSTRAÇÃO
БЕЗ ИЗОБРАЖЕНИЯ

600000

Pos.	Item	Quantity	Description	Bezeichnung	Serie	K
40	969641401	1	SAFETY ROLLER	SCHUTZWALZE		
50	969641501	1	HOLDER	HALTER		

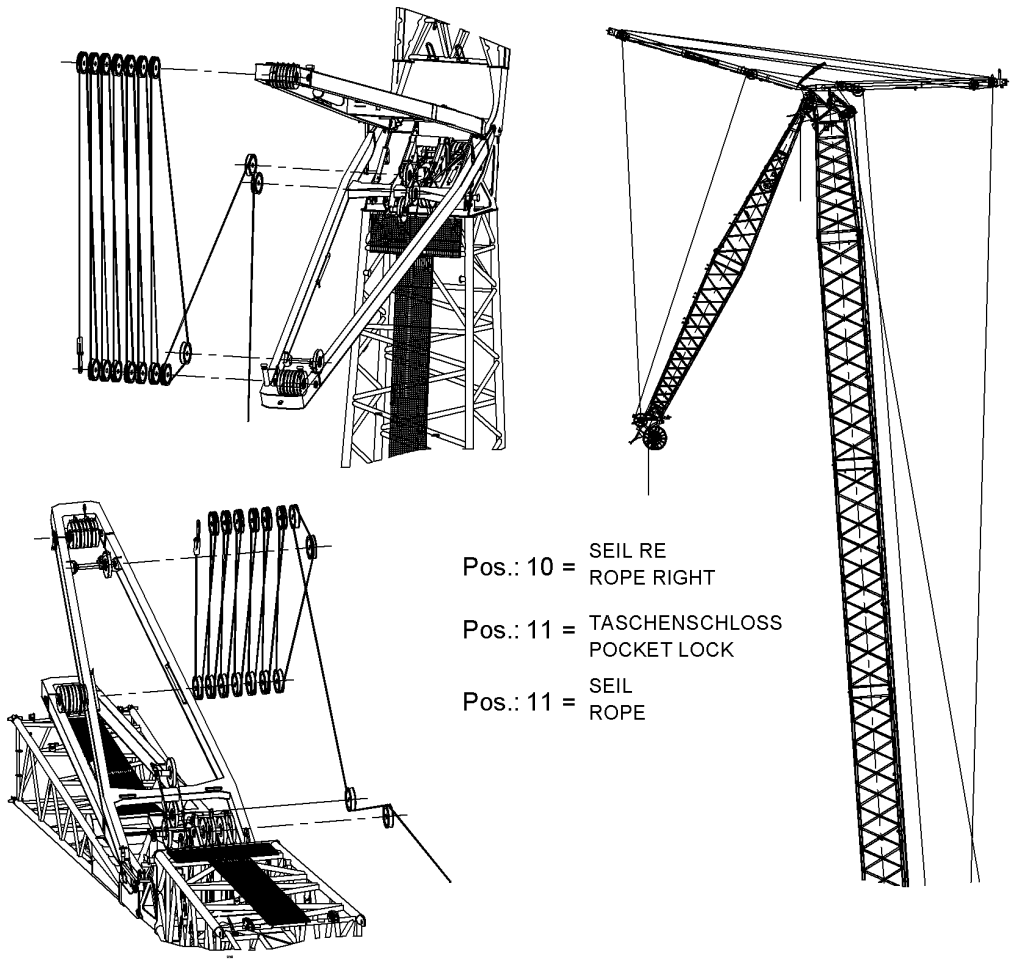

Pos.	Item	Quantity	Description	Bezeichnung	Serie	K
10	10227828	1	ROPE RIGHT	SEIL RE		
11	773941308	1	POCKET LOCK	TASCHENSCHLOSS		
12	774730714	40	ROPE	SEIL		

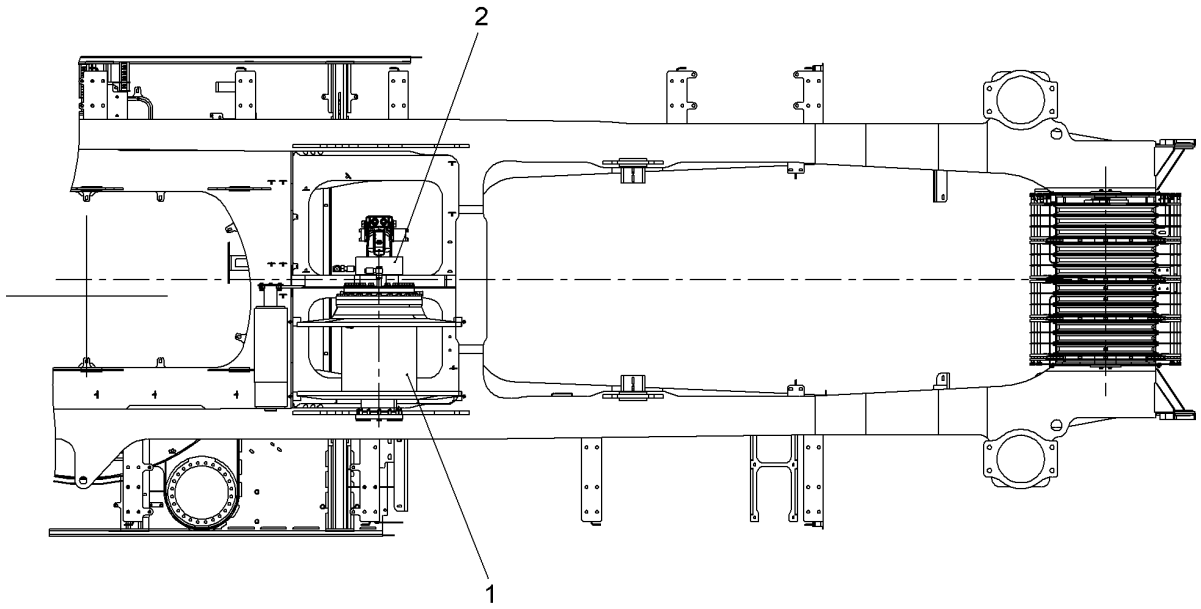

516505

Pos.	Item	Quantity	Description	Bezeichnung	Serie	K
1	10519686	1	LUG SUPERSTRUCTURE CPL ⇨ ❑ 319	EZW OW EINBAU KPL		
2	990494114	1	DRIVE UNIT ⇨ ❑ 337	ANTRIEBSEINHEIT		

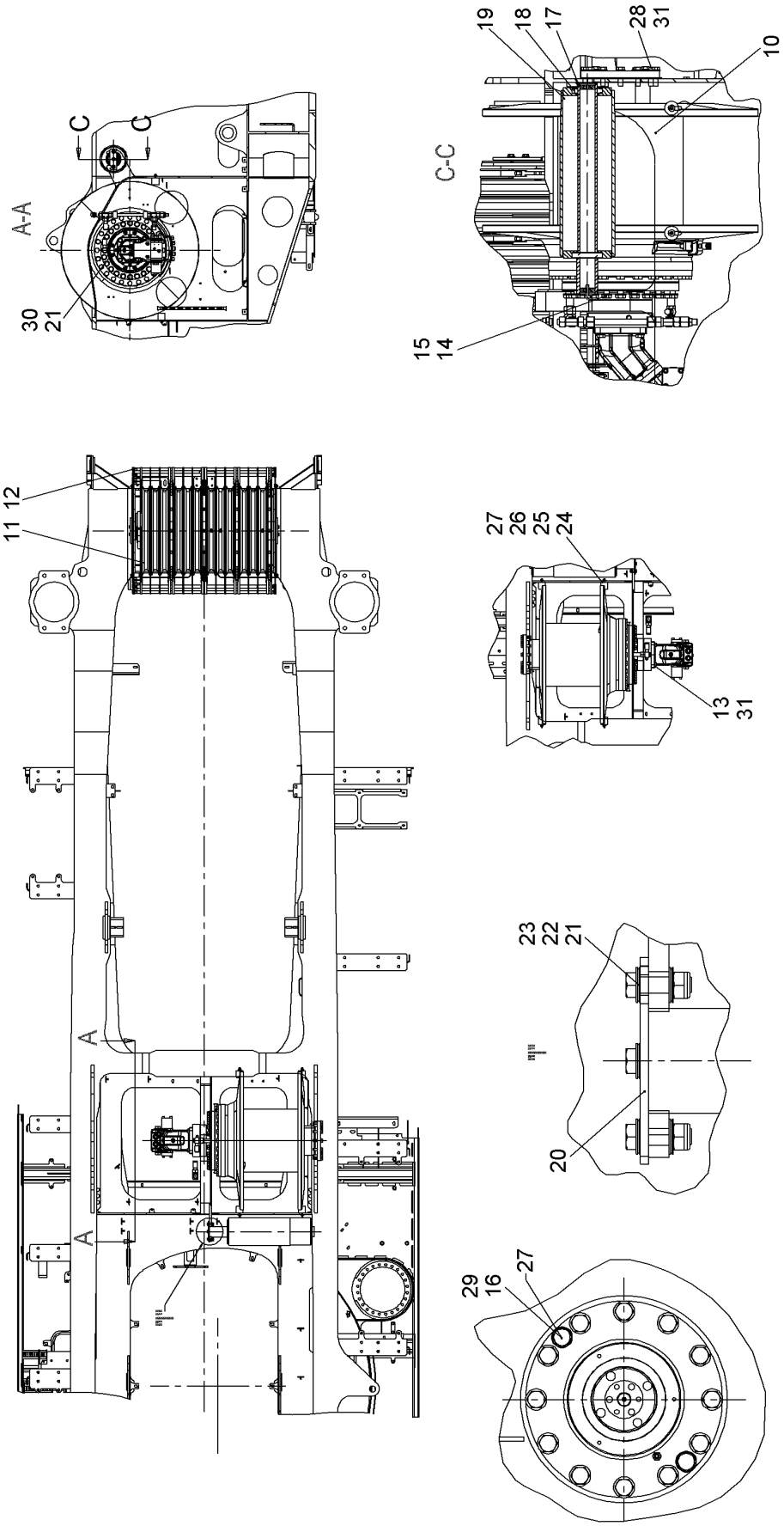
A-A
C
C
30
21
C-C
19
18
17
28
31
10
15
14
11 12
A
A
27
26
25
24
13
31
23
22
21
20
29
16
27
516503

Pos.	Item	Quantity	Description	Bezeichnung	Serie	K
2	10519687	1	MAIN LUG HYDR ⇨ ❑ 321	HAUPT EZW HYDR		
4	10552085	1	HOSE LIST ⇨ ❑ 323	SCHLAUCHLISTE		
10	10551563	1	WINCH ⇨ ❑ 324	WINDE		
11	992925814	1	LUG SHEAVE SET ⇨ ❑ 329	EZW ROLLENPAKET		
12	992925914	1	ROPE GUARD LUG CPL ⇨ ❑ 330	SEILSCHUTZ EZW KPL		
13	10543903	4	HEX SCREW ISO 4017 M16X50 10.9	SECHSKANTSCHRAUBE		
14	10543920	22	HEX SCREW ISO 4017 M20X40 10.9	SECHSKANTSCHRAUBE		
15	10536600	22	LOCK WASHER 20 27MNCRB5-2;EN 10083	SICHERUNGSSCHEIBE		
16	460024203	2	WASHER DIN 6916 17 C45	SCHEIBE		
17	918539614	1	AXLE	ACHSE		
18	746171514	2	DEEP GROOVE BALL BEARING	RILLENKUGELLAGER		
19	971361703	1	ROLLER ST.CONST.	ROLLE SCHWK		
20	949892214	1	WP	WP		
21	10536582	13	LOCK WASHER 12 254 SMO;EN 10088-3	SICHERUNGSSCHEIBE		
22	406511414	3	HEX SCREW ISO 4017 M12X40 A4-70	SECHSKANTSCHRAUBE		
23	10540495	2	HEX NUT ISO 10511 M12 A4	SECHSKANTMUTTER		
24	289064214	4	SPACER PIECE	DISTANZSTUECK		
25	10539488	4	SOCKET HEAD SCREW ISO 4762 M8X60 A4-7	ZYLINDERSCHRAUBE		
26	10540493	4	HEX NUT ISO 10511 M8 A4	SECHSKANTMUTTER		
27	10540510	4	WASHER ISO 7093-1 8 A4	SCHEIBE		
28	10543905	12	HEX SCREW ISO 4017 M16X60 10.9	SECHSKANTSCHRAUBE		
29	10539315	2	HEX SCREW ISO 4017 M16X25 10.9	SECHSKANTSCHRAUBE		
30	4043003	8	SOCKET HEAD SCREW ISO 4762 M12X40 10.9	ZYLINDERSCHRAUBE		
31	10536598	16	LOCK WASHER 16 27MNCRB5-2;EN 10083	SICHERUNGSSCHEIBE		

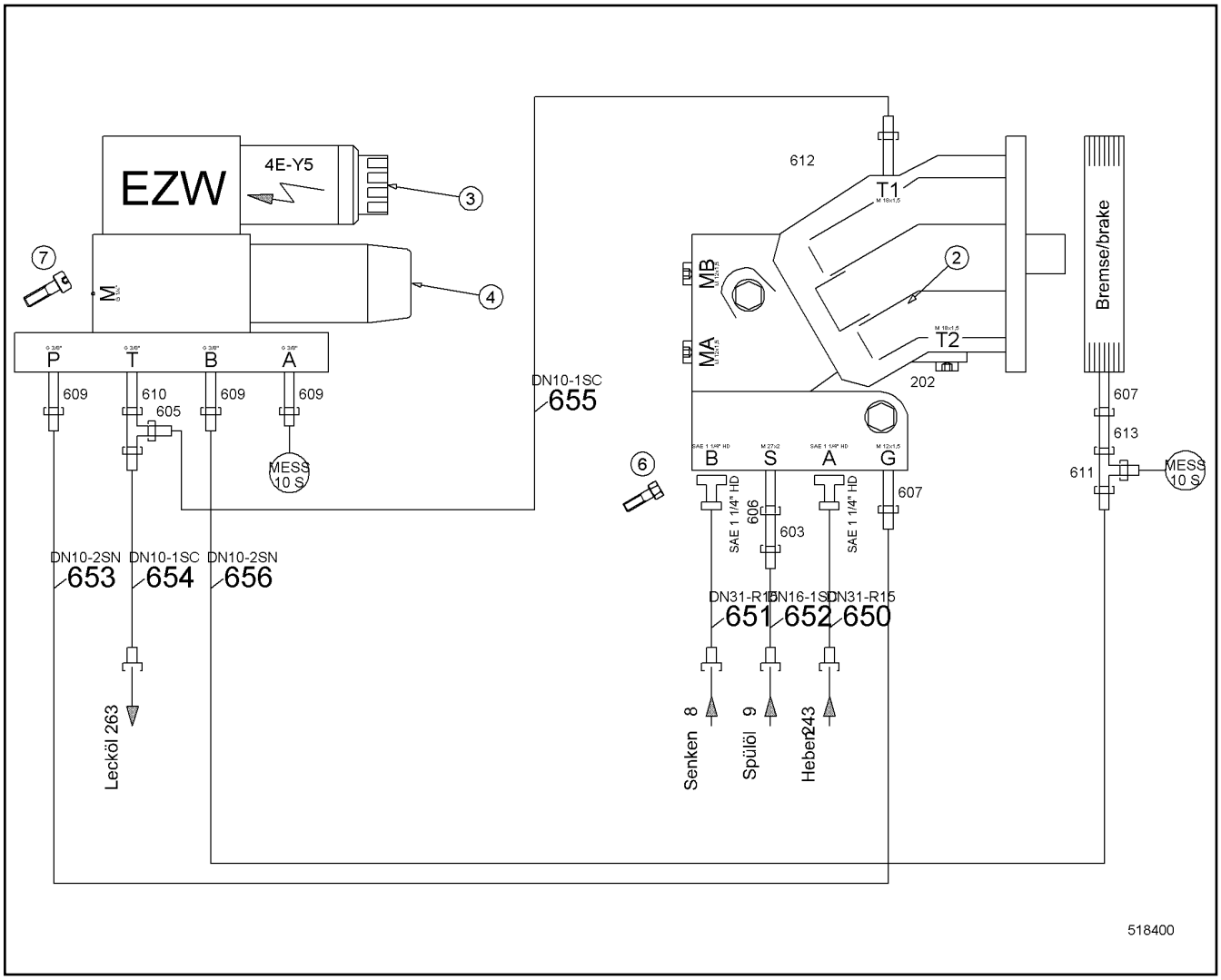

Pos.	Item	Quantity	Description	Bezeichnung	Serie	K
2	512294214	1	OIL MOTOR ⇨ ❑ 322	OELMOTOR		
3	511432714	1	DIRECTIONAL CONTROL VALVE	WEGEVENTIL		
4	511476914	1	PRESSURE REDUCTION VALVE	DRUCKREDUZIERVENTIL		
5	510662914	1	CONNECTING PLATE	ANSCHLUSSPLATTE		
6	10539311	6	HEX SCREW ISO 4017 M14X130 10.9	SECHSKANTSCHRAUBE		
7	404302914	4	SOCKET HEAD SCREW ISO 4762 M5X90 10.9	ZYLINDERSCHRAUBE		
201	510694514	2	GAUGE CONNECTION	MESSSTUTZEN		
202	477705114	1	FLANGE JOINT	VERSCHRAUBUNG		
603	7407108	1	FLANGE JOINT	VERSCHRAUBUNG		
605	247128602	1	FLANGE JOINT	VERSCHRAUBUNG		
606	471033314	1	FLANGE JOINT	VERSCHRAUBUNG		
607	471004614	2	FLANGE JOINT	VERSCHRAUBUNG		
609	471032808	3	FLANGE JOINT	VERSCHRAUBUNG		
610	247009402	1	FLANGE JOINT	VERSCHRAUBUNG		
611	7367776	1	FLANGE JOINT	VERSCHRAUBUNG		
612	471039408	1	FLANGE JOINT	VERSCHRAUBUNG		
613	7617268	1	FLANGE JOINT	VERSCHRAUBUNG		
615	10539300	2	HEX SCREW ISO 4017 M14X45 10.9	SECHSKANTSCHRAUBE		
616	10472425	2	PLAIN COMPRESSION RING	RECHTECKRING		
617	510586614	4	FLANGE HALF	FLANSCHHAELFTE		

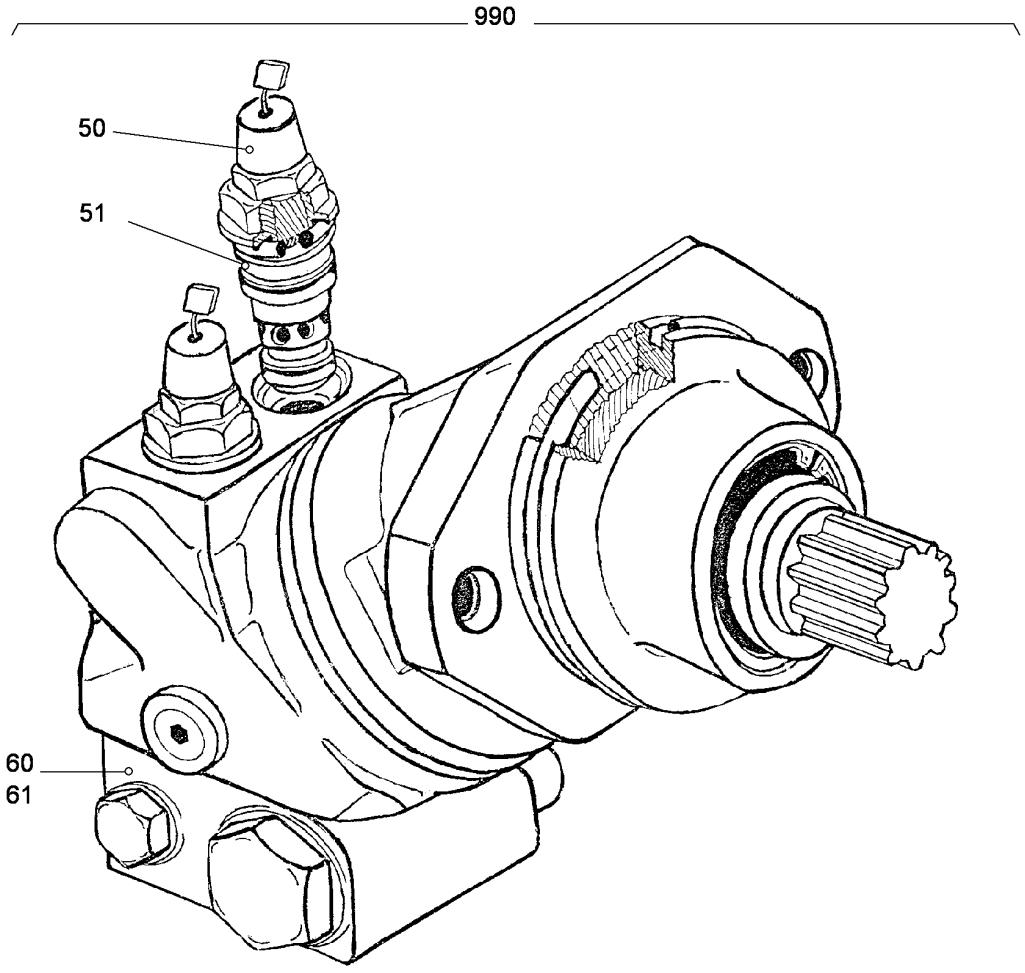

Pos.	Item	Quantity	Description	Bezeichnung	Serie	K
50	511639714	2	PRESSURE LIMITING VALVE	DRUCKBEGRENZUNGSVENTIL		
51	512401514	2	SEALING SET	DS		
60	512401414	1	BRAKE VALVE	BREMSVENTIL		
61	511614214	1	SEALING SET	DS		
990	512402214	1	SEAL KIT CPL.	DICHTSATZ KPL.		

ACHTUNG !
ATTENTION !
ATTENTION !
ATENCIÓN !
ATENÇÃO !
ВНИМАНИЕ

Für Schlauchbestellungen kann über die Schlauchnummer, in der entsprechenden Schlauchliste, die Identnummer festgestellt werden.

For ordering flexible hoses you can find the identification number through the hose-number in the corresponding hose-list.

Pour des ordres de tuyau flexible le nombre d'identification on voit dans la liste de tuyau flexible correspondente.

Para el pedido de manguera, indicar el número de identificación de la manguera de la lista respectiva.

Para se encomendar uma mangueira, consulte o número de identificaçao na respectiva lista de mangueiras.

Для оформления заказов на шланги/рукавы идент. № может быть определен при помощи номера шланга/рукава, указанного в соотетствующем перечне шлангов/рукавов.

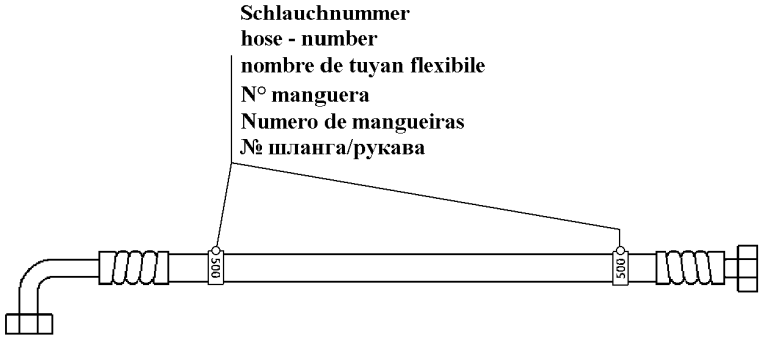

500000

Pos.	Item	Quantity	Description	Bezeichnung	Serie	K
650	995951314	1	HOSE CPL	SCHLAUCH KPL		
651	995951414	1	HOSE CPL	SCHLAUCH KPL		
652	991170814	1	HOSE CPL	SCHLAUCH KPL		
653	993213714	1	HOSE CPL	SCHLAUCH KPL		
654	993751514	1	HOSE CPL	SCHLAUCH KPL		
655	914763014	1	HOSE CPL	SCHLAUCH KPL		
656	928950414	1	HOSE CPL	SCHLAUCH KPL		

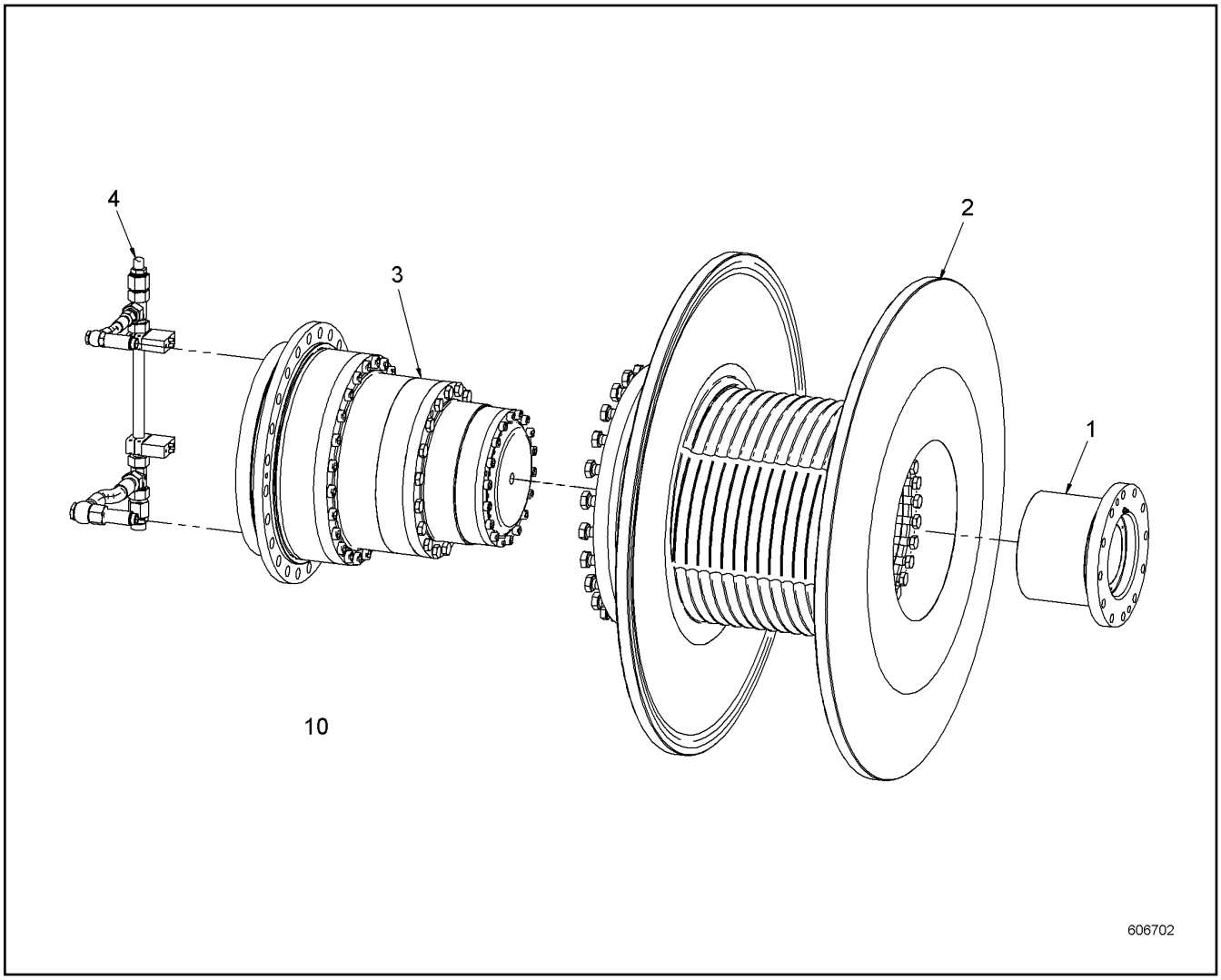

Pos.	Item	Quantity	Description	Bezeichnung	Serie	K
1	10583864	1	FLANGE ⇨ ❑ 325	FLANSCH		
2	10555973	1	ROPE DRUM ⇨ ❑ 326	SEILTROMMEL		
3	10583865	1	GEARBOX ⇨ ❑ 327	GETRIEBE		
4	10583845	1	OIL LINE ⇨ ❑ 328	OELLEITUNG		
10	10547904	1	SCREW LOCKING	SCHRAUBENSICHERUNG		
200	10595126	1	SEALING SET CPL	DS KPL		

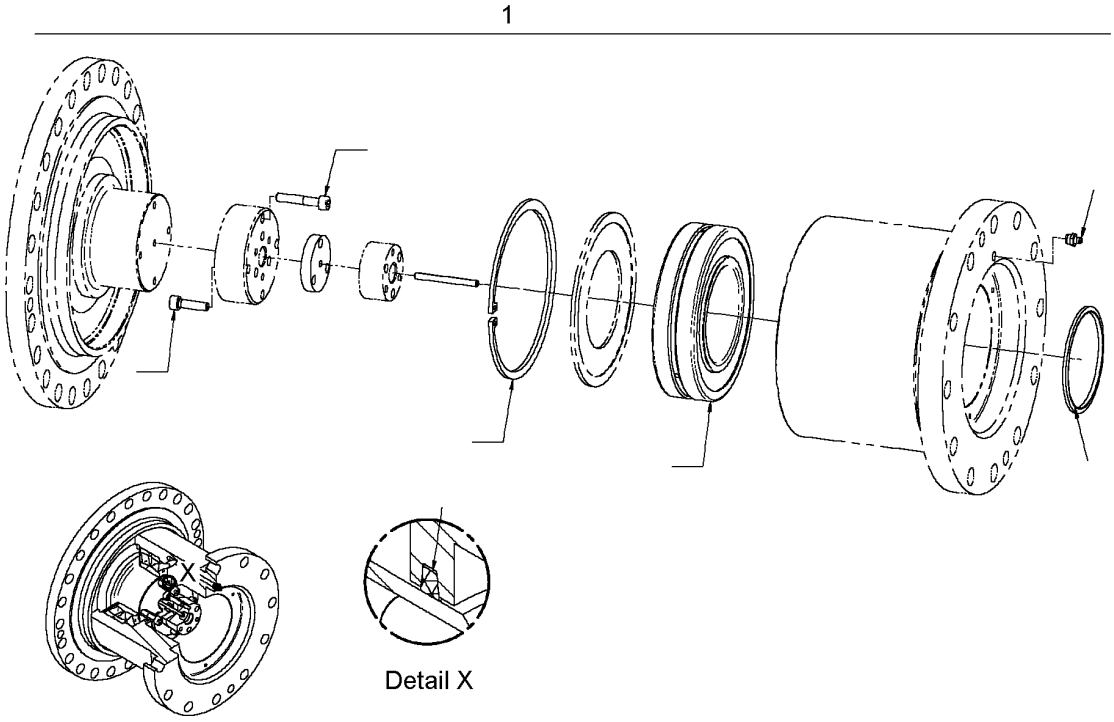

Pos.	Item	Quantity	Description	Bezeichnung	Serie	K
1	11253394	1	REPAIR KIT	REPARATURSATZ		

1

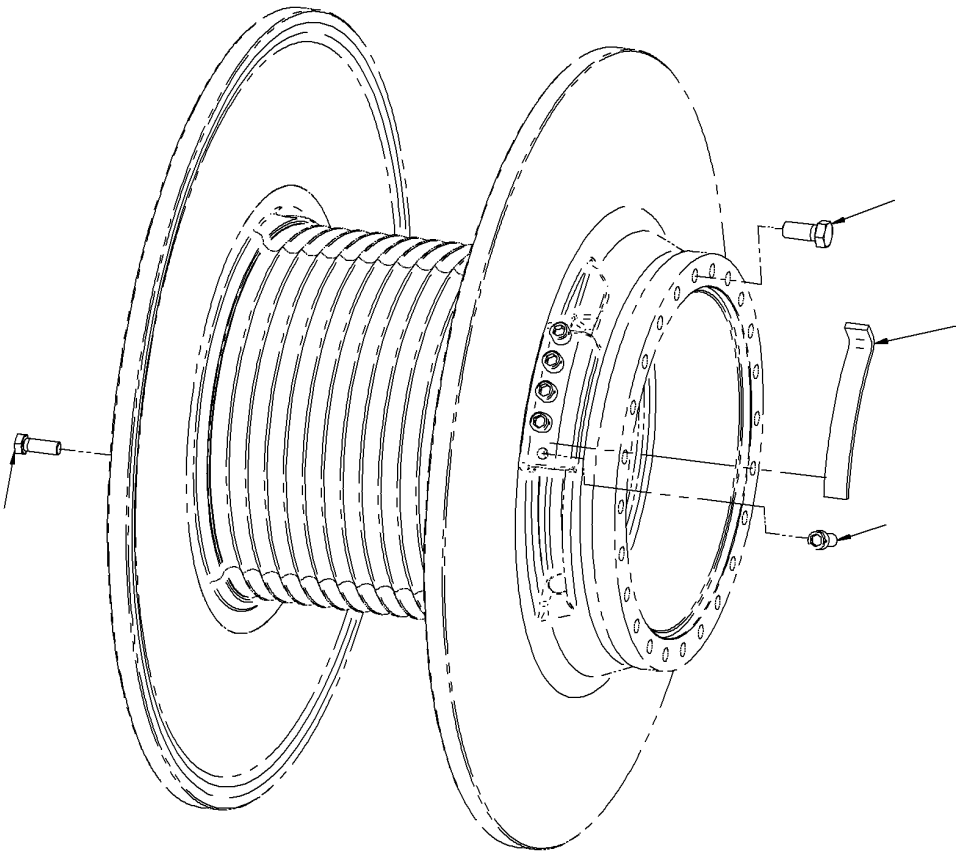

606704

Pos.	Item	Quantity	Description	Bezeichnung	Serie	K
1	11253398	1	REPAIR KIT	REPARATURSATZ		
900	10555972	1	ROPE DRUM	SEILTROMMEL		

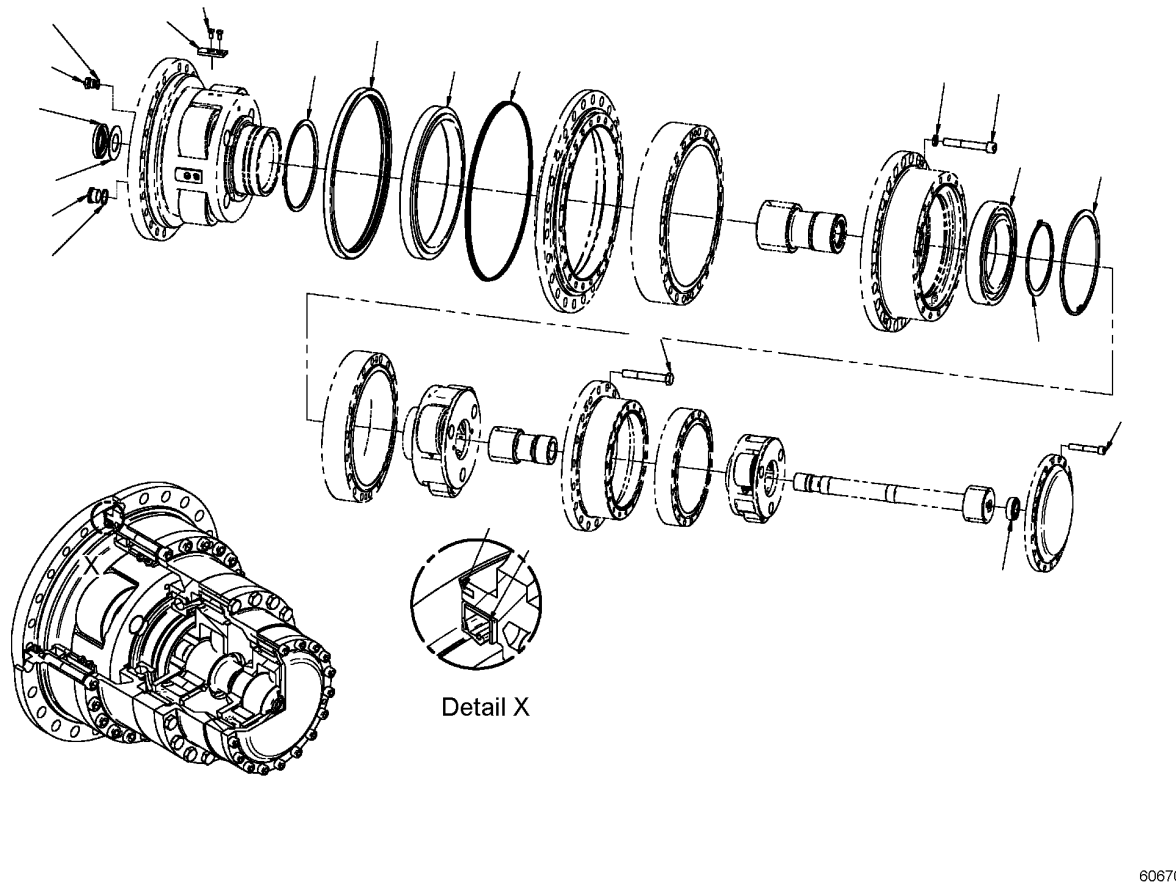

Pos.	Item	Quantity	Description	Bezeichnung	Serie	K
1	11253401	1	REPAIR KIT	REPARATURSATZ		

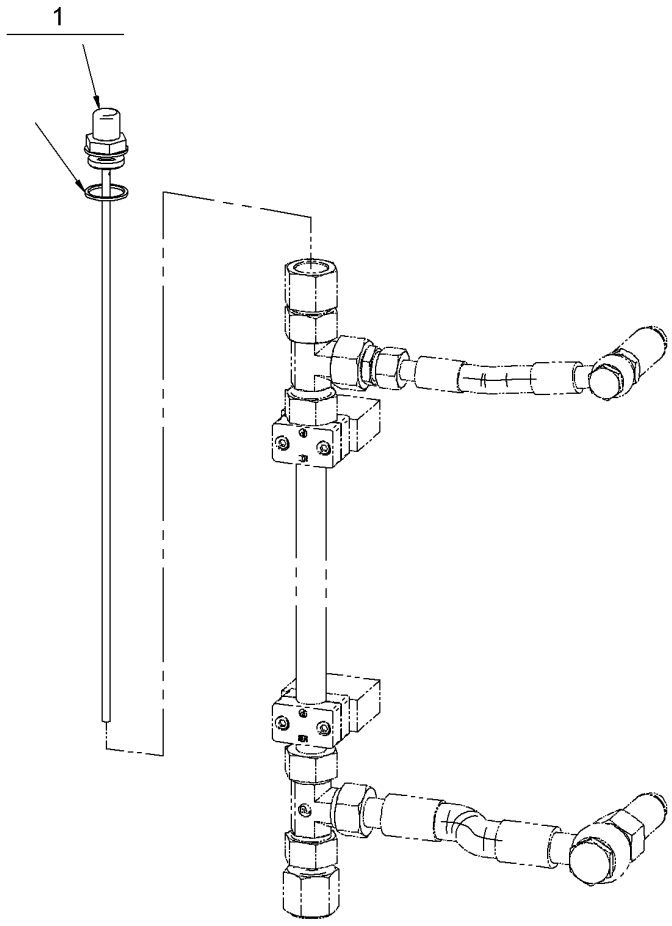

Pos.	Item	Quantity	Description	Bezeichnung	Serie	K
1	11253440	1	REPAIR KIT	REPARATURSATZ		

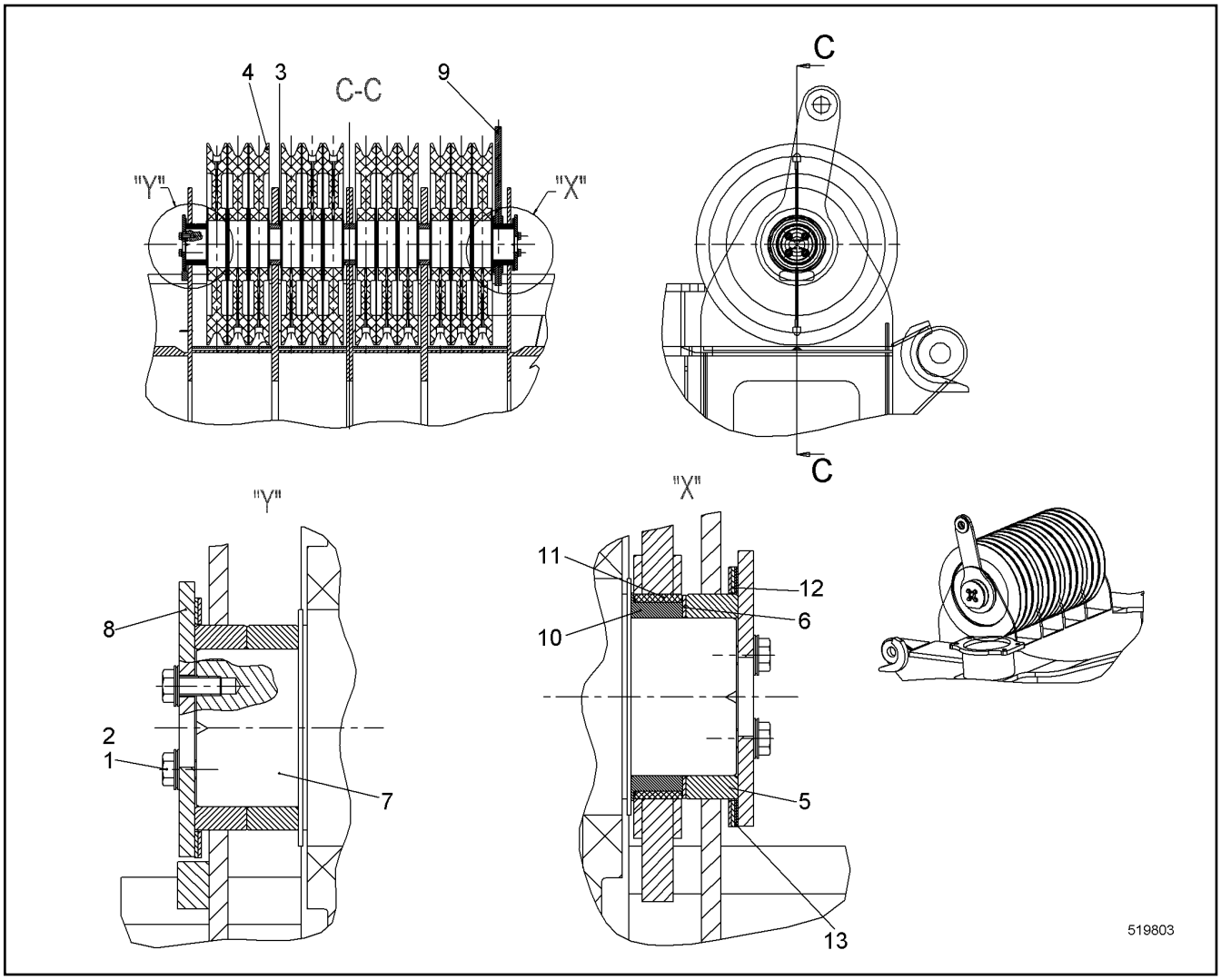

Pos.	Item	Quantity	Description	Bezeichnung	Serie	K
1	10536582	8	LOCK WASHER 12 254 SMO;EN 10088-3	SICHERUNGSSCHEIBE		
2	406517314	8	HEX SCREW ISO 4017 M12X30 A4-70	SECHSKANTSCHRAUBE		
3	959869314	3	BUSHING 100/130X36 S770QL;EN 10210-2	BUCHSE		
4	914690714	12	ROPE PULLEY CPL	SEILROLLE KPL		
5	10336763	3	BUSHING 100/130X33 S770QL;EN 10210-2	BUCHSE		
6	385151114	1	WASHER 129/102X2 ST 12.03	SCHEIBE		
7	959866614	1	PIN	BOLZEN		
8	949196514	2	COVER	DECKEL		
9	970827603	1	ROPE FIXING POINT STRAP	LASCHE FIXPUNKT EINZIEHSEIL		
10	959001414	1	BUSHING	BUCHSE		
11	10223371	1	BUSHING RD130/120X30 KUNSTSTOFF	BUCHSE		
12	949352914	4	WASHER 165/132X2 ST 12.03	SCHEIBE		
13	385123814	2	WASHER 165/132X1 ST 12.03	SCHEIBE		

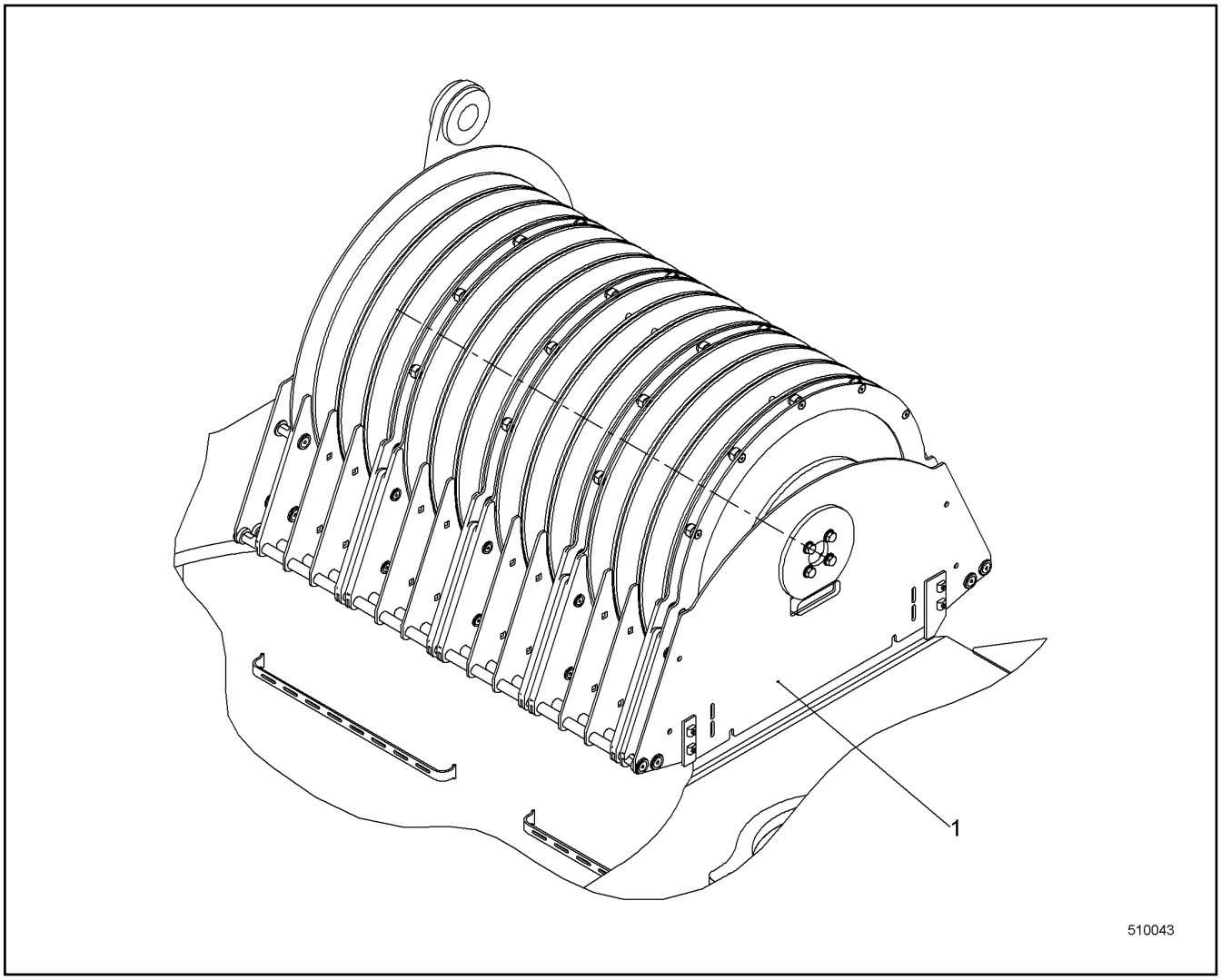

Pos.	Item	Quantity	Description	Bezeichnung	Serie	K
1	993353714	1	ROPE GUARD LUG CPL ⇨ ❑ 331	SEILSCHUTZ EZW KPL		

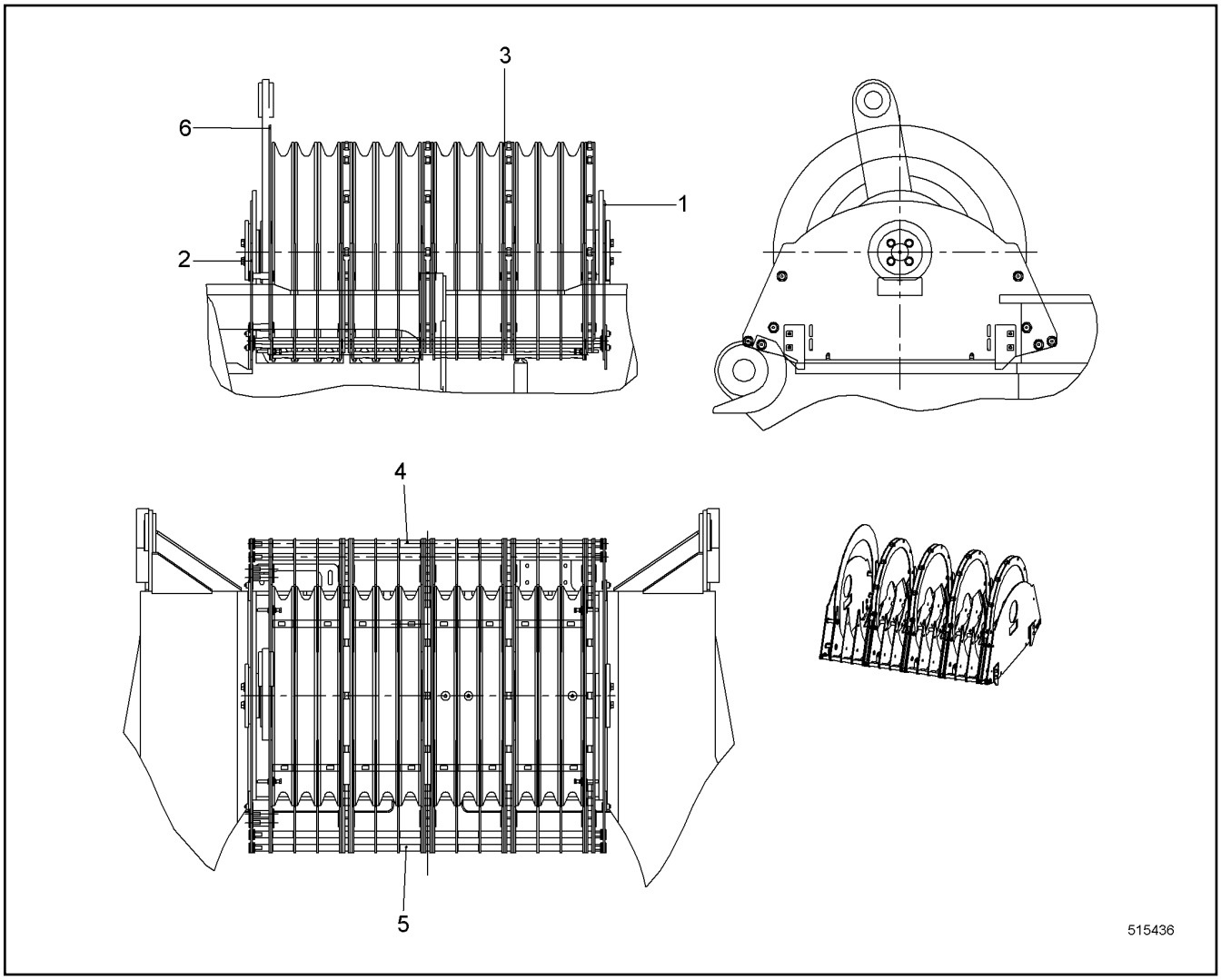

Pos.	Item	Quantity	Description	Bezeichnung	Serie	K
1	992938914	1	SIDE COMPONENT ⇨ ❑ 332	SEITENTEIL		
2	992939214	1	SIDE COMPONENT ⇨ ❑ 333	SEITENTEIL		
3	992938814	4	BRACKET CPL ⇨ ❑ 334	BUEGEL KPL		
4	992938614	1	BRACKET CPL ⇨ ❑ 335	KONSOLE KPL		
5	992943414	1	BRACKET CPL ⇨ ❑ 336	KONSOLE KPL		
6	10099010	1	BRACKET	BUEGEL		

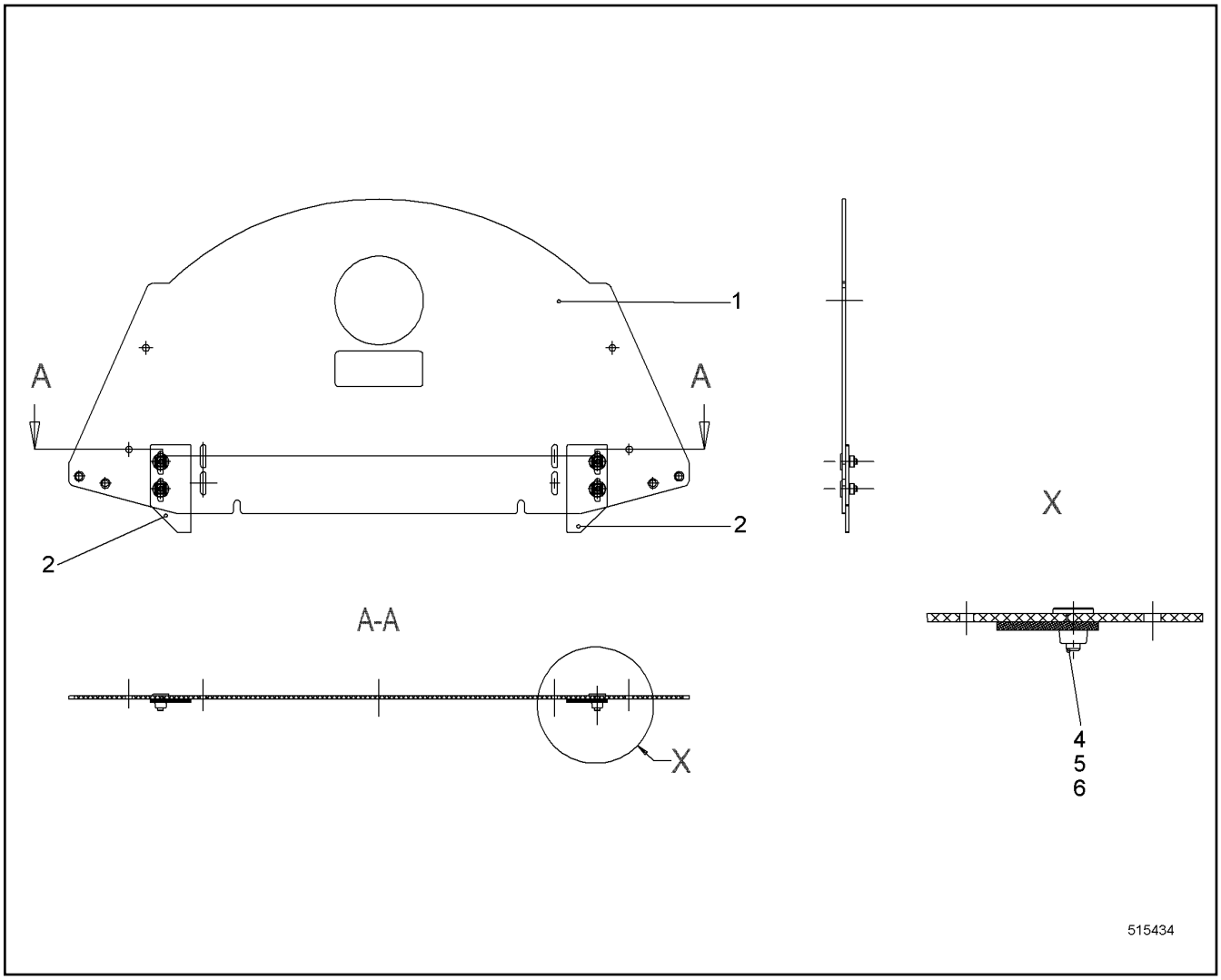

Pos.	Item	Quantity	Description	Bezeichnung	Serie	K
1	10099005	1	SHEET	PLATTE		
2	10336711	2	BRACKET	BUEGEL		
4	485550114	4	CAGE NUT M8-RR-123-47	KAEFIGMUTTER		
5	460022703	4	WASHER EN 14399-6 12 C45	SCHEIBE		
6	4002551	4	COUNTERSUNK SCREW DIN 7991 M8X25 8.8	SENKSCHRAUBE		

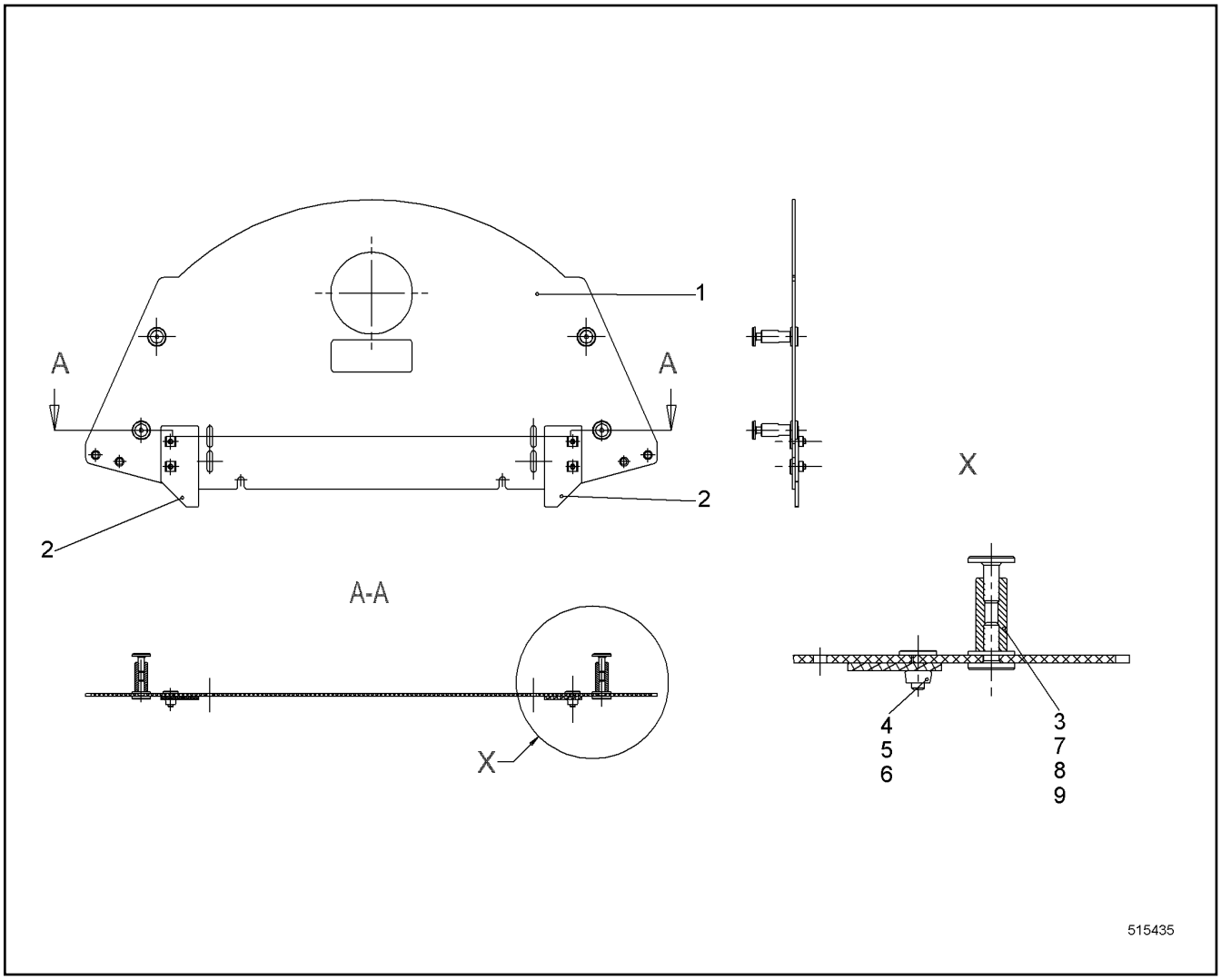

Pos.	Item	Quantity	Description	Bezeichnung	Serie	K
1	10099005	1	SHEET	PLATTE		
2	10336711	2	BRACKET	BUEGEL		
4	485550114	4	CAGE NUT M8-RR-123-47	KAEFIGMUTTER		
5	460022703	4	WASHER EN 14399-6 12 C45	SCHEIBE		
6	4002551	4	COUNTERSUNK SCREW DIN 7991 M8X25 8.8	SENKSCHRAUBE		
7	4600170	8	COUNTERSUNK SCREW DIN 7991 M10X30 8.8	SENKSCHRAUBE		
8	460024203	8	WASHER DIN 6916 17 C45	SCHEIBE		
9	485568514	4	WASHER DIN 34816 10.5 PA 6.6	SCHEIBE		

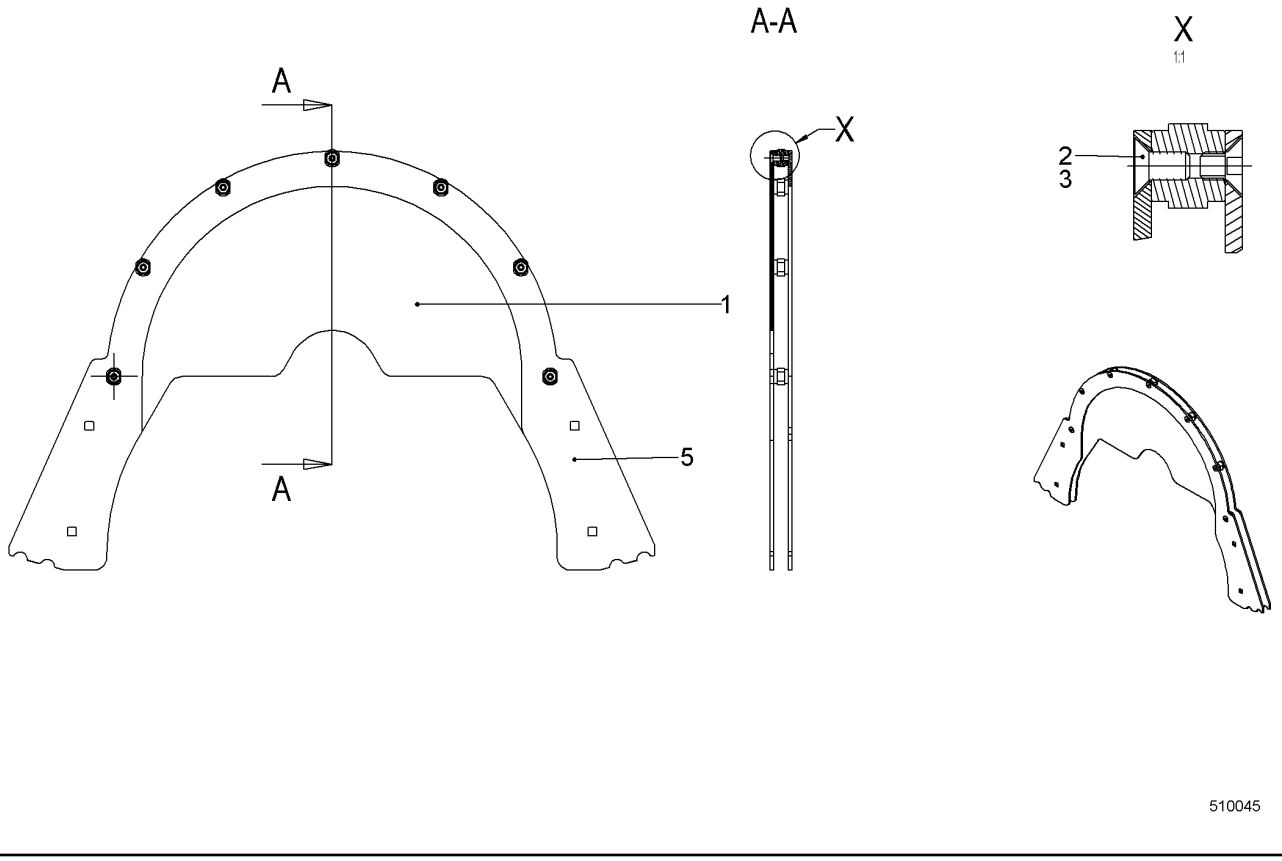

Pos.	Item	Quantity	Description	Bezeichnung	Serie	K
1	10336709	1	BRACKET	BUEGEL		
3	4001205	7	COUNTERSUNK SCREW DIN 7991 M8X16 8.8	SENKSCHRAUBE		
4	4600257	7	COUNTERSUNK SCREW DIN 7991 M8X12 8.8	SENKSCHRAUBE		
5	10099007	1	BRACKET	BUEGEL		

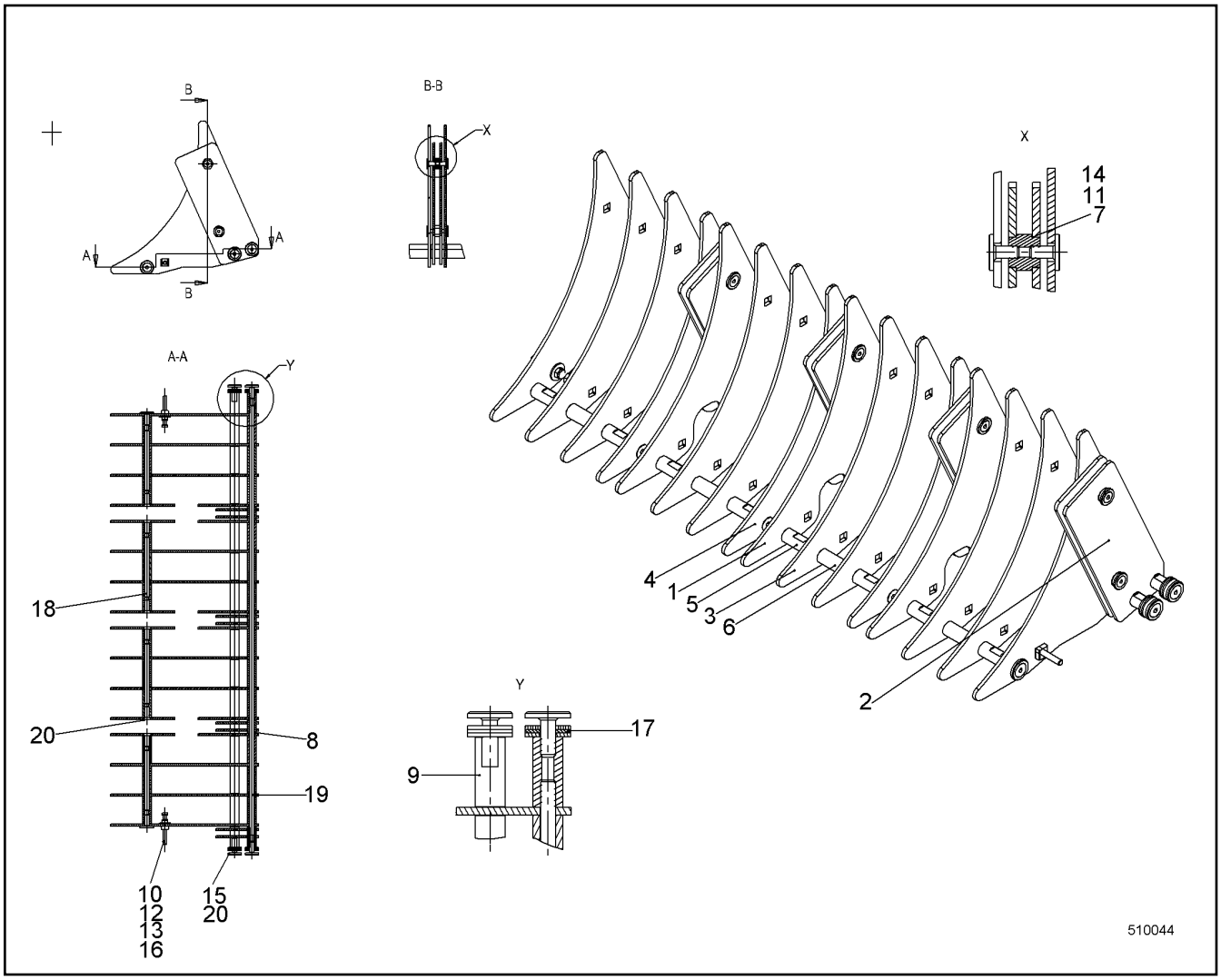

Pos.	Item	Quantity	Description	Bezeichnung	Serie	K
1	10336707	3	SHEET	PLATTE		
2	10336708	8	SHEET	PLATTE		
3	10099009	10	SHEET	PLATTE		
4	10336722	3	SHEET	PLATTE		
10	10331507	2	HEX SCREW ISO 4017 M8X65 A4-70	SECHSKANTSCHRAUBE		
11	4600157	16	COUNTERSUNK SCREW DIN 7991 M8X20 8.8;	SENKSCHRAUBE		
12	10540510	2	WASHER ISO 7093-1 8 A4	SCHEIBE		
13	10540493	2	HEX NUT ISO 10511 M8 A4	SECHSKANTMUTTER		
14	460022703	16	WASHER EN 14399-6 12 C45	SCHEIBE		
15	460024203	6	WASHER DIN 6916 17 C45	SCHEIBE		
16	485550114	2	CAGE NUT M8-RR-123-47	KAEFIGMUTTER		
17	485568514	12	WASHER DIN 34816 10.5 PA 6.6	SCHEIBE		
20	4600170	12	COUNTERSUNK SCREW DIN 7991 M10X30 8.8	SENKSCHRAUBE		

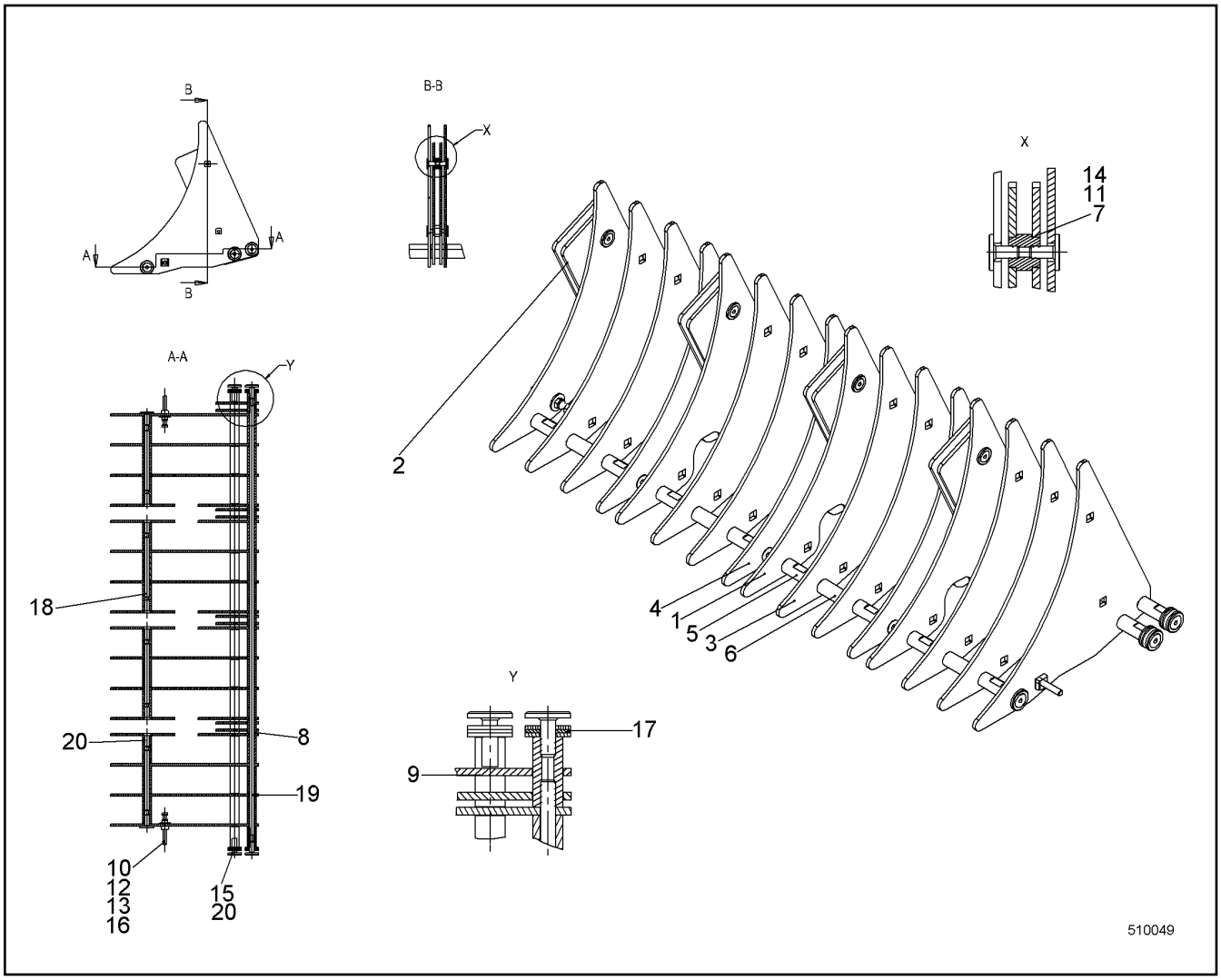

Pos.	Item	Quantity	Description	Bezeichnung	Serie	K
1	10336707	3	SHEET	PLATTE		
2	10336708	8	SHEET	PLATTE		
3	10099009	10	SHEET	PLATTE		
4	10336722	3	SHEET	PLATTE		
10	10331507	2	HEX SCREW ISO 4017 M8X65 A4-70	SECHSKANTSCHRAUBE		
11	4600157	16	COUNTERSUNK SCREW DIN 7991 M8X20 8.8;	SENKSCHRAUBE		
12	10540510	2	WASHER ISO 7093-1 8 A4	SCHEIBE		
13	10540493	2	HEX NUT ISO 10511 M8 A4	SECHSKANTMUTTER		
14	460022703	16	WASHER EN 14399-6 12 C45	SCHEIBE		
15	460024203	6	WASHER DIN 6916 17 C45	SCHEIBE		
16	485550114	2	CAGE NUT M8-RR-123-47	KAEFIGMUTTER		
17	485568514	12	WASHER DIN 34816 10.5 PA 6.6	SCHEIBE		
20	4600170	12	COUNTERSUNK SCREW DIN 7991 M10X30 8.8	SENKSCHRAUBE		

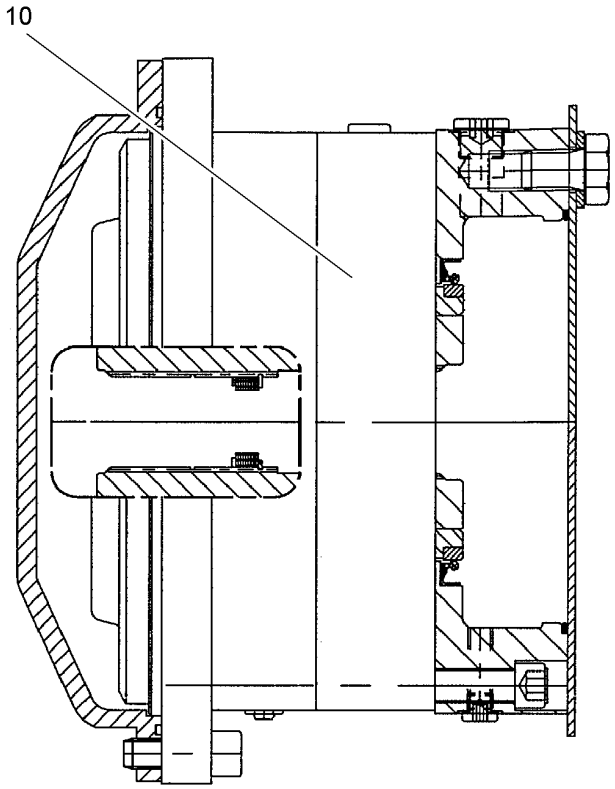

506837

Pos.	Item	Quantity	Description	Bezeichnung	Serie	K
10	990464514	1	DRIVE ⇨ ❑ 338	ANTRIEB		

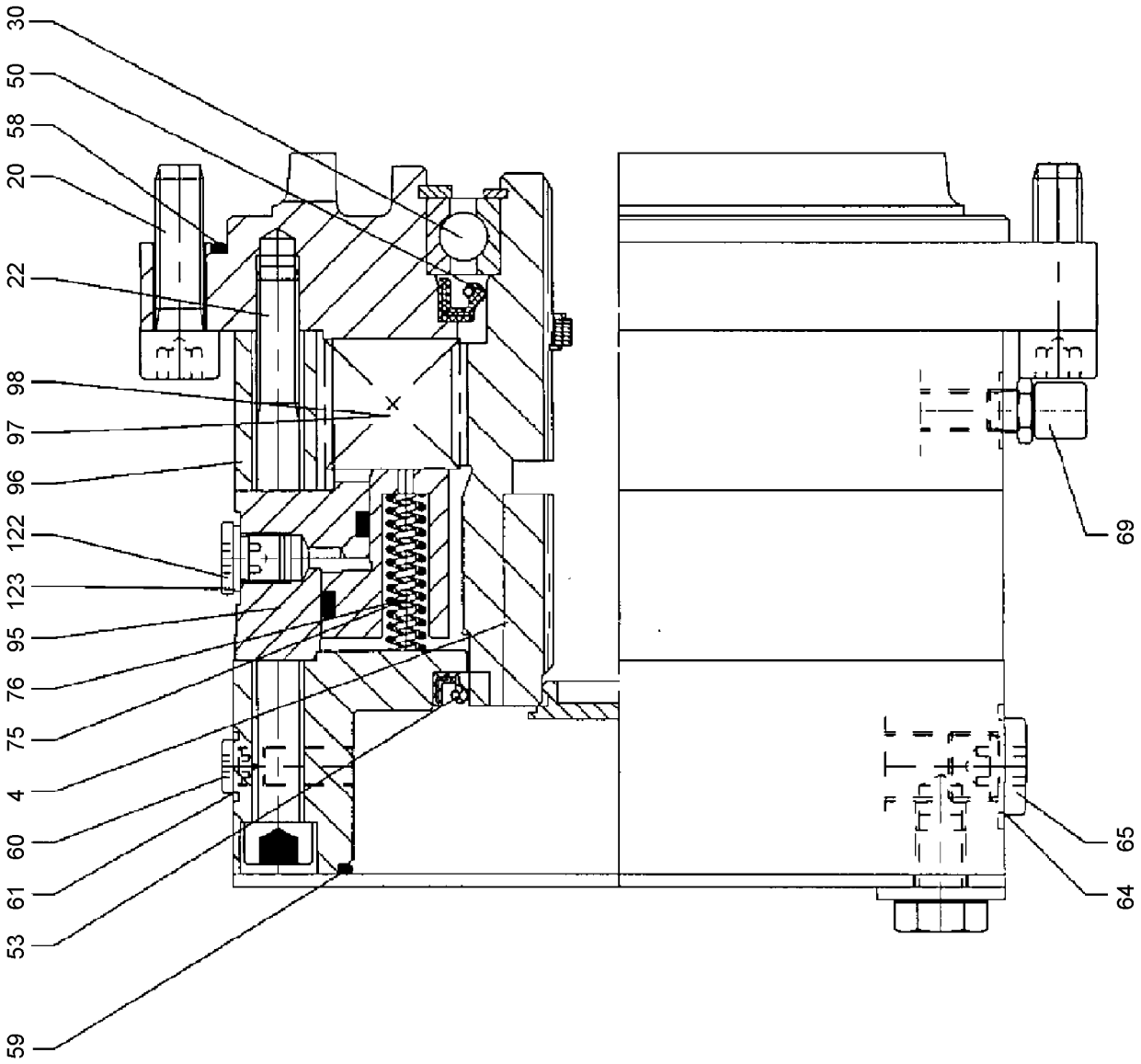
30
50
58
20
22
98
97
96
122
123
95
76
75
4
60
61
53
59
69
65
64
604840

Pos.	Item	Quantity	Description	Bezeichnung	Serie	K
4	11223233	1	DRIVE SLEEVE	ANTRIEBSHUELSE		
20	11223234	8	SOCKET HEAD SCREW DIN 912 M12X40 8.8	ZYLINDERSCHRAUBE		
22	10539530	12	SOCKET HEAD SCREW ISO 4762 M12X140 A4	ZYLINDERSCHRAUBE		
30	10592555	1	DEEP GROOVE BALL BEARING	RILLENKUGELLAGER		
50	571360008	1	ROTARY SHAFT LIP SEAL	RADIALWELLENDICHTRING		
53	790295314	1	SHAFT SEAL	WELLENDICHTRING		
58	726456214	1	O-RING	O-RING		
59	10548553	1	O-RING	O-RING		
60	502027614	2	SCREW PLUG DIN 908 M10X1 ST	VERSCHLUSSSCHRAUBE		
61	790295414	2	SEALING RING	DICHTRING		
64	4600320	1	SCREW PLUG DIN 908 M18X1.5 5.8	VERSCHLUSSSCHRAUBE		
65	790444514	1	SEALING RING	DICHTRING		
69	592089814	1	VENTILATION VALVE	ENTLUEFTUNGSVENTIL		
75	11305568	16	PRESSURE SPRING	DRUCKFEDER		
76	11305579	16	PRESSURE SPRING	DRUCKFEDER		
95	592054714	1	OIL-PRESSURE UNIT	OELDRUCKEINHEIT		
96	501559414	1	MULTI-DISC CARRIER	LAMELLENTRAEGER		
97	501540414	8	OUTER MULTI-DISC	AUSSENLAMELLE		
98	501540514	7	INTERNAL MULTI-DISC	INNENLAMELLE		
122	502027514	1	SCREW PLUG DIN 908 M12X1.5	VERSCHLUSSSCHRAUBE		
123	710121014	1	SEALING RING	DICHTRING		

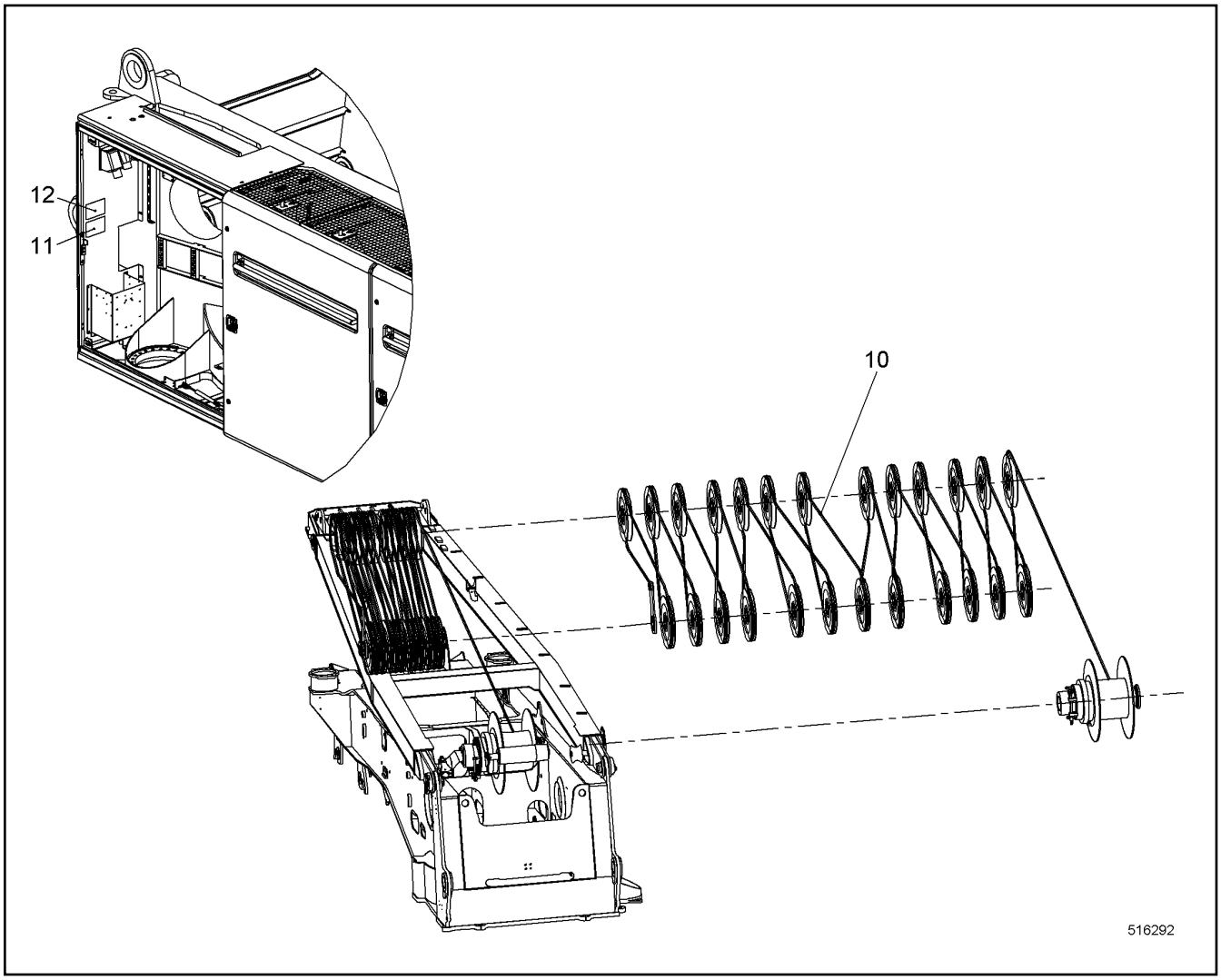

Pos.	Item	Quantity	Description	Bezeichnung	Serie	K
10	11227045	1	ROPE LEFT	SEIL LI		
11	11227046	1	SIGN	SCHILD		
12	10533589	1	SIGN	SCHILD		

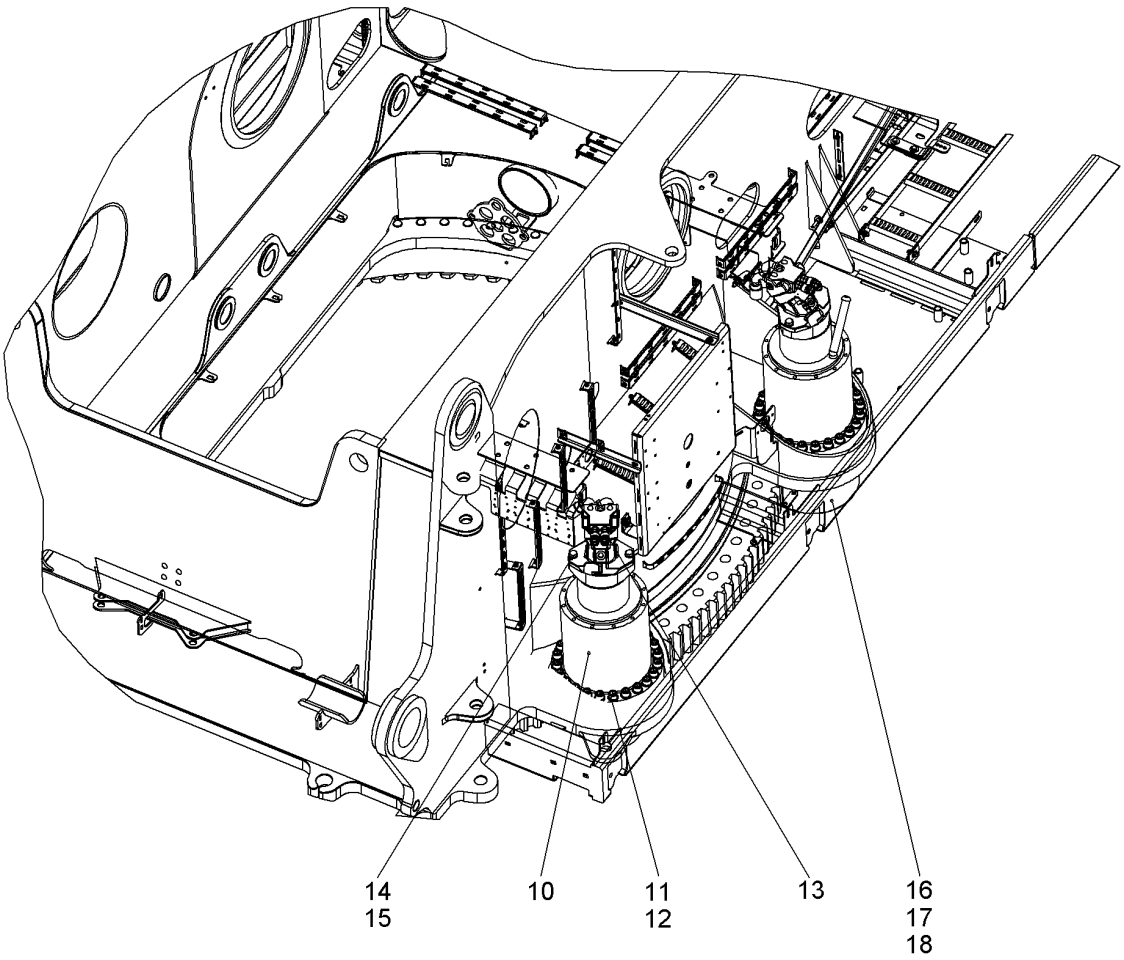

Pos.	Item	Quantity	Description	Bezeichnung	Serie	K
2	10519683	1	SG HYDR ⇨ ❑ 342	DW HYDR		
4	10561780	1	HOSE LIST ⇨ ❑ 348	SCHLAUCHLISTE		
10	90013762	2	SG	DW		
11	460022203	48	WASHER DIN 6916 21 C45	SCHEIBE		
12	10544105	48	SOCKET HEAD SCREW ISO 4762 M20X130 10.	ZYLINDERSCHRAUBE		
14	10544172	4	WASHER ISO 7089 16	SCHEIBE		
15	10543902	4	HEX SCREW ISO 4017 M16X45 10.9	SECHSKANTSCHRAUBE		
16	10099140	2	PINION GUARD	RITZELSCHUTZ		
17	420001014	6	WASHER ISO 7089 8 A4	SCHEIBE		
18	406501514	6	HEX SCREW ISO 4017 M8X16 A4-70	SECHSKANTSCHRAUBE		

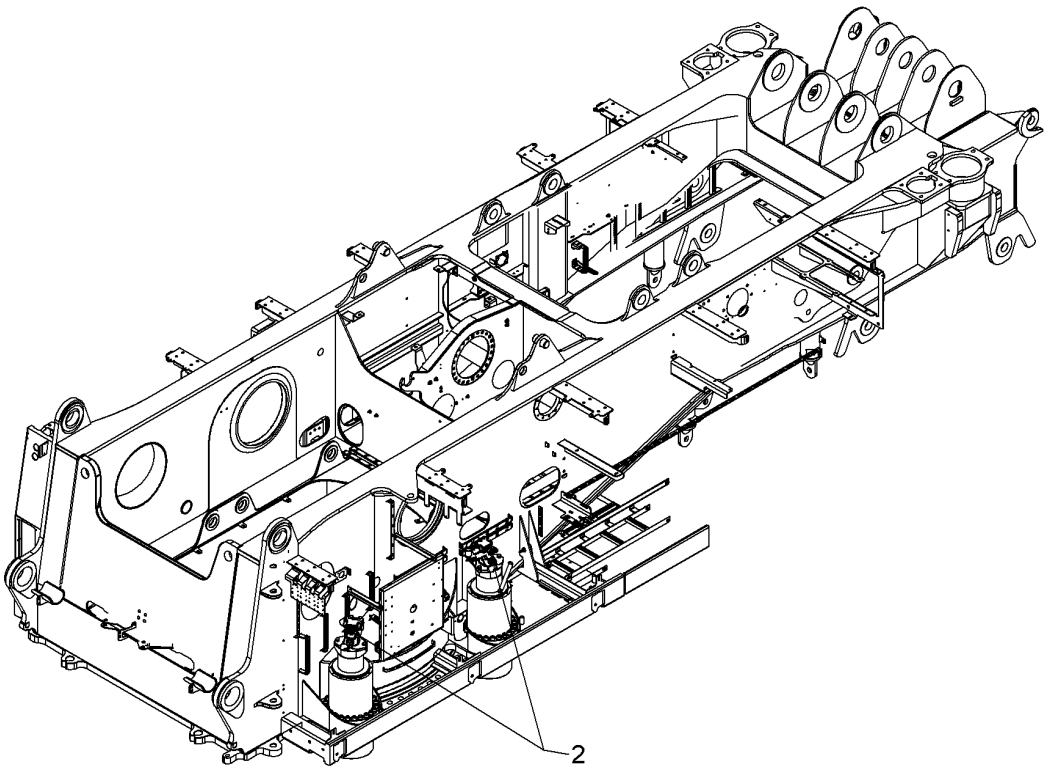

Pos.	Item	Quantity	Description	Bezeichnung	Serie	K
2	10552161	1	TUBING HYDR ⇨ ❑ 343	VERROHRUNG HYDR		

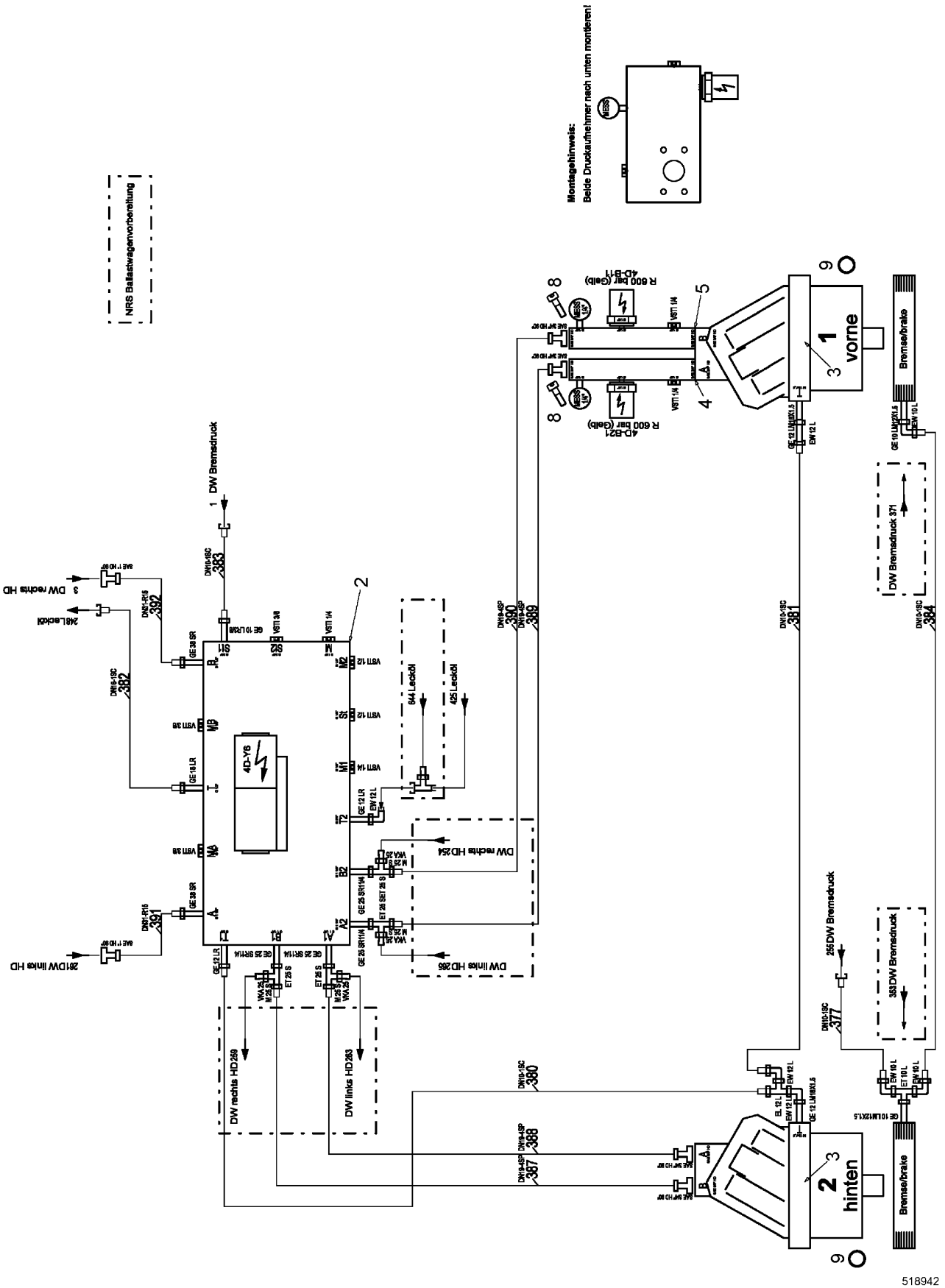

8.7.2015 518942	**138281_ETK_001**	343 (1/2)
LIEBHERR	**TUBING HYDR** **VERROHRUNG HYDR**	**10 55 216 1**

Pos.	Item	Quantity	Description	Bezeichnung	Serie	K
2	511434714	1	SG SAFETY BLOCK ⇨ ❑ 345	DW SICHERUNGSBLOCK		
3	512299114	2	OIL MOTOR ⇨ ❑ 347	OELMOTOR		
6	4001246	16	HEX SCREW ISO 4017 M10X35 10.9	SECHSKANTSCHRAUBE		
7	4600366	8	HEX SCREW ISO 4017 M12X40 10.9	SECHSKANTSCHRAUBE		
8	4630200	8	SOCKET HEAD SCREW ISO 4762 M10X65 10.9	ZYLINDERSCHRAUBE		
9	726461714	2	O-RING	O-RING		
200	7409720	2	GAUGE CONNECTION	MESSSTUTZEN		
201	482430314	1	FLANGE JOINT	VERSCHRAUBUNG		
202	7403569	3	FLANGE JOINT	VERSCHRAUBUNG		
203	510694514	2	GAUGE CONNECTION	MESSSTUTZEN		
204	247117702	4	FLANGE JOINT	VERSCHRAUBUNG		
600	247117302	4	FLANGE JOINT	VERSCHRAUBUNG		
602	247128602	1	FLANGE JOINT	VERSCHRAUBUNG		
603	247112702	2	FLANGE JOINT	VERSCHRAUBUNG		
604	247009702	1	FLANGE JOINT	VERSCHRAUBUNG		
605	247009402	2	FLANGE JOINT	VERSCHRAUBUNG		
608	247128402	4	FLANGE JOINT	VERSCHRAUBUNG		
611	471039408	2	FLANGE JOINT	VERSCHRAUBUNG		
612	471034414	2	FLANGE JOINT	VERSCHRAUBUNG		
618	471039708	2	FLANGE JOINT	VERSCHRAUBUNG		
619	471007014	1	FLANGE JOINT	VERSCHRAUBUNG		
620	10597776	4	FLANGE JOINT	VERSCHRAUBUNG		
623	482431714	4	FLANGE JOINT	VERSCHRAUBUNG		
624	477400814	4	FLANGE JOINT	VERSCHRAUBUNG		
625	477701514	4	FLANGE JOINT	VERSCHRAUBUNG		
630	510586914	4	FLANGE HALF	FLANSCHHAELFTE		
631	510587514	8	FLANGE HALF	FLANSCHHAELFTE		
640	10490784	4	PLAIN COMPRESSION RING	RECHTECKRING		
641	10490781	2	PLAIN COMPRESSION RING	RECHTECKRING		

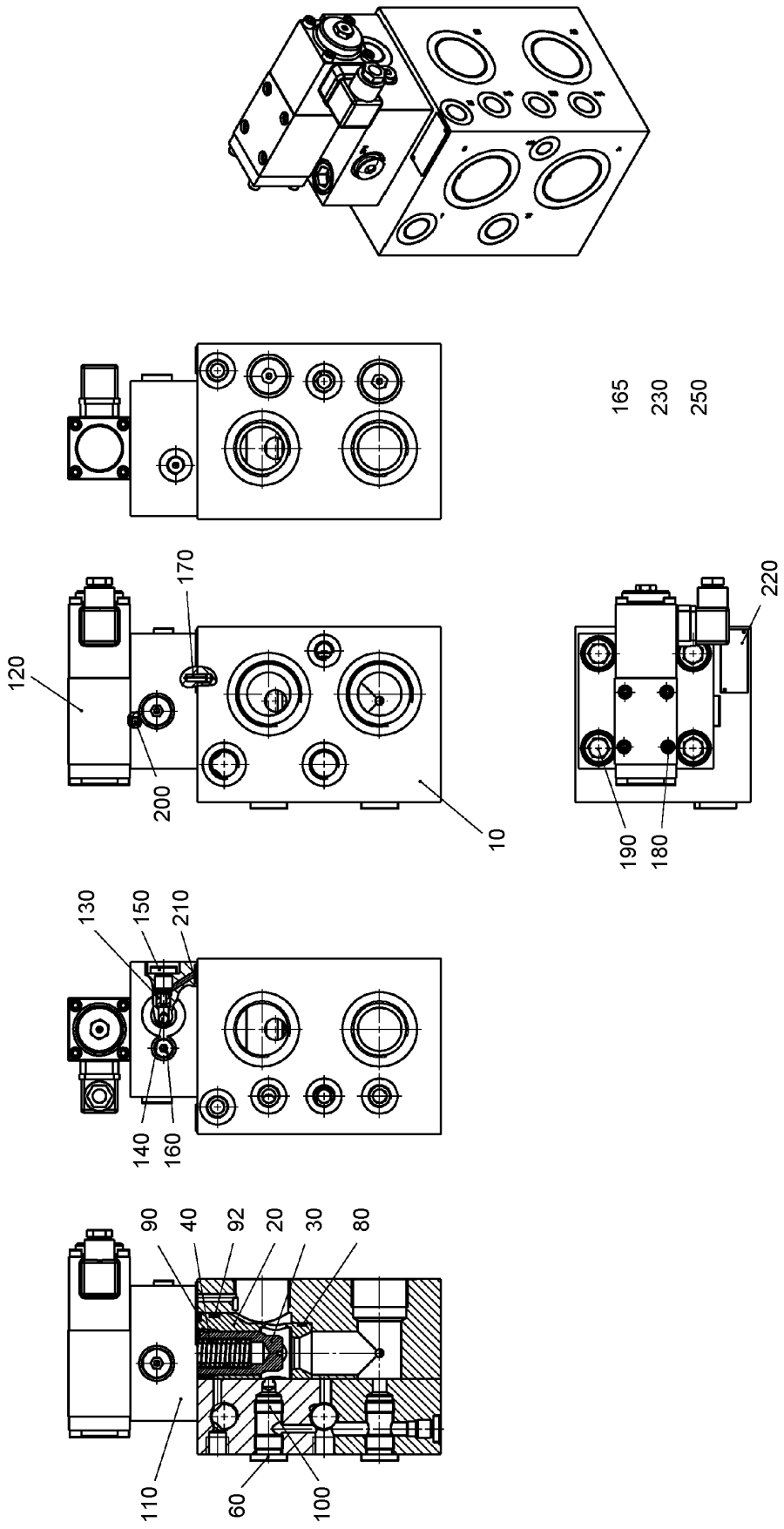
165
230
250
170
120
200
10
220
190
180
130
150
210
140
160
90
40
92
20
30
80
110
60
100
606149

Pos.	Item	Quantity	Description	Bezeichnung	Serie	K
10	11226015	1	BLOCK	BLOCK		
20	11226016	1	SLEEVE NG32/RD60/23X85	HUELSE		
30	11226017	1	PISTON	KOLBEN		
40	11226019	1	PRESSURE SPRING	DRUCKFEDER		
60	11226023	2	SCREW PLUG G1/2"-ED	VERSCHLUSSSCHRAUBE		
80	11226035	1	SEALING RING	DICHTRING		
90	11226084	1	O-RING	O-RING		
92	11226086	1	SEALING RING	DICHTRING		
100	11226088	2	CHECK VALVE	SPERRVENTIL		
110	11226090	1	COVER	DECKEL		
120	10336968	1	SOLENOID VALVE	MAGNETVENTIL		
130	11226118	1	SEAT	SITZ		
140	11226127	1	STEEL BALL	STAHLKUGEL		
150	11226129	1	SCREW PLUG G1/4"-ED	VERSCHLUSSSCHRAUBE		
160	11226130	1	SCREW PLUG G1/8"-ED	VERSCHLUSSSCHRAUBE		
165	11226133	1	SCREW PLUG G3/8"-ED	VERSCHLUSSSCHRAUBE		
170	11226135	1	DOWEL PIN DIN 1481 5X16 ST	SPANNSTIFT		
180	11226137	4	SOCKET HEAD SCREW DIN 912 M5X45 8.8	ZYLINDERSCHRAUBE		
190	11226139	4	SOCKET HEAD SCREW DIN 912 M16X60 8.8	ZYLINDERSCHRAUBE		
200	11226142	1	NOZZLE	DUESE		
210	11226144	4	O-RING	O-RING		
220	11226148	1	TYPE PLATE	TYPENSCHILD		
230	10540182	1	DIRECTIONAL CONTROL VALVE	WEGEVENTIL		
250	512256614	1	SEALING SET CPL	DS KPL		

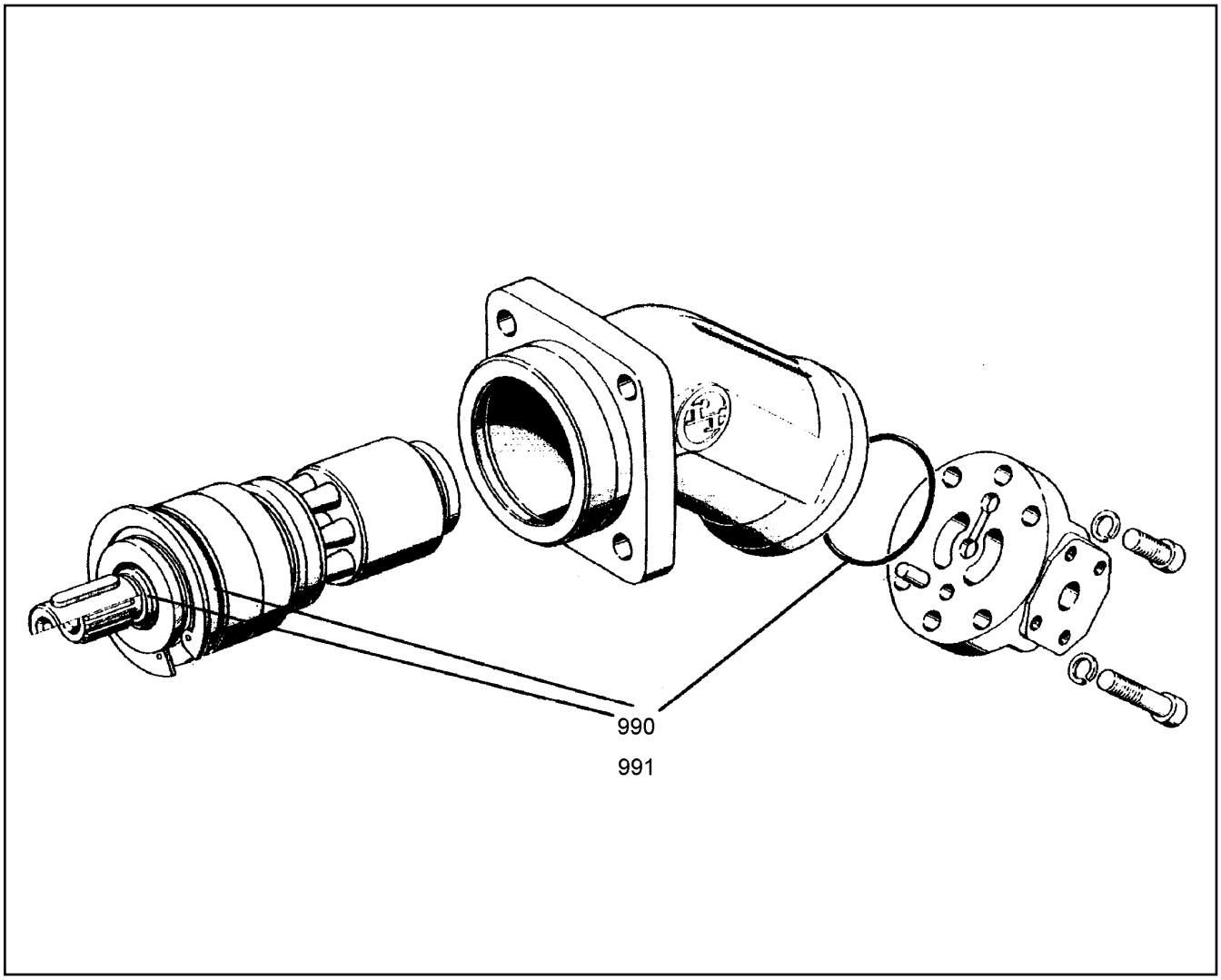

Pos.	Item	Quantity	Description	Bezeichnung	Serie	K
990	512299214	1	SEALING SET CPL	DS KPL		

ACHTUNG !
ATTENTION !
ATTENTION !
ATENCIÓN !
ATENÇÃO !
ВНИМАНИЕ

Für Schlauchbestellungen kann über die Schlauchnummer, in der entsprechenden Schlauchliste, die Identnummer festgestellt werden.

For ordering flexible hoses you can find the identification number through the hose-number in the corresponding hose-list.

Pour des ordres de tuyau flexible le nombre d'identification on voit dans la liste de tuyau flexible correspondente.

Para el pedido de manguera, indicar el número de identificación de la manguera de la lista respectiva.

Para se encomendar uma mangueira, consulte o número de identificaçao na respectiva lista de mangueiras.

Для оформления заказов на шланги/рукавы идент. № может быть определен при помощи номера шланга/рукава, указанного в соотетствующем перечне шлангов/рукавов.

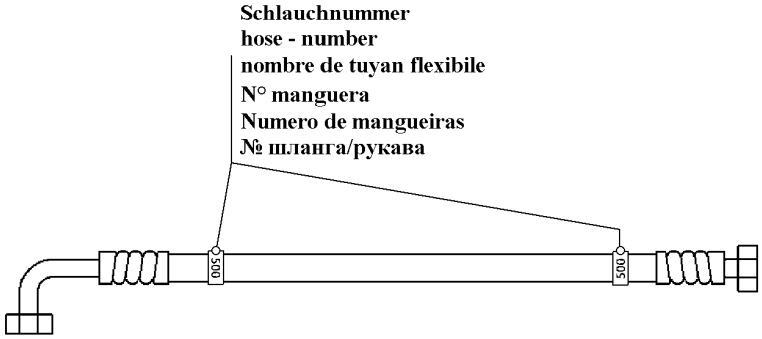

500000

Pos.	Item	Quantity	Description	Bezeichnung	Serie	K
380	918819414	1	HOSE CPL	SCHLAUCH KPL		
381	928113314	1	HOSE CPL	SCHLAUCH KPL		
382	995082614	1	HOSE CPL	SCHLAUCH KPL		
384	995944214	1	HOSE CPL	SCHLAUCH KPL		
387	995944314	1	HOSE CPL	SCHLAUCH KPL		
388	991384314	1	HOSE CPL	SCHLAUCH KPL		
389	992552014	1	HOSE CPL	SCHLAUCH KPL		
390	928044014	1	HOSE CPL	SCHLAUCH KPL		
391	995944414	1	HOSE CPL	SCHLAUCH KPL		
392	995951214	1	HOSE CPL	SCHLAUCH KPL		

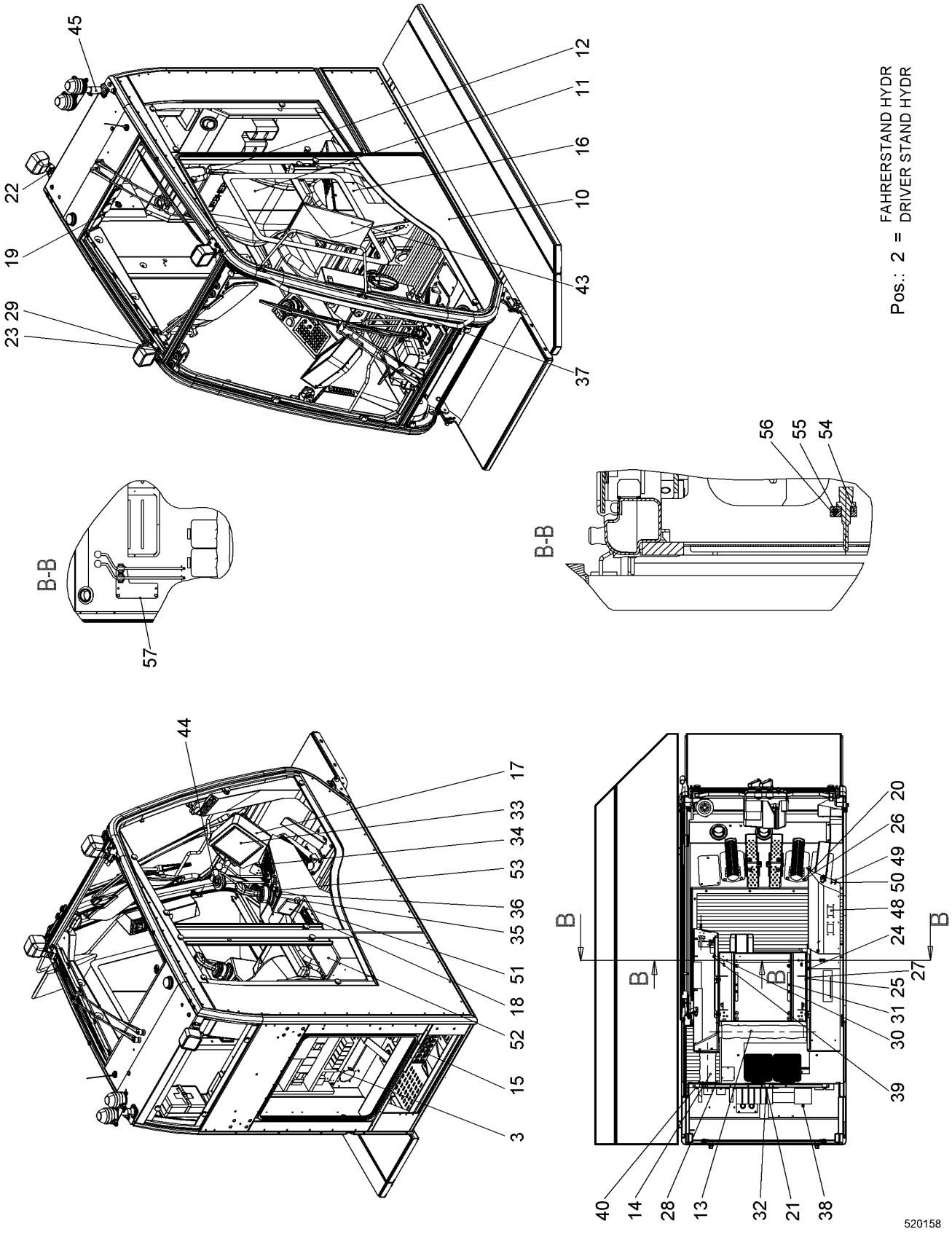
45
22
19
23 29
12
11
16
10
43
37
Pos.: 2 = FAHRERSTAND HYDR
DRIVER STAND HYDR
B-B
57
B-B
56
55
54
44
17
33
34
53
36
35
51
18
52
15
3
B
B
B
B
20
26
49
50
48
24
27
25
31
30
39
40
14
28
13
32
21
38
520158

Pos.	Item	Quantity	Description	Bezeichnung	Serie	K
3	11279736	1	CABIN EL ⇨ ❑ 351	KABINE EL		
10	10352508	1	CABIN ⇨ ❑ 366	KABINE		
11	10225068	1	OPERATOR SEAT ⇨ ❑ 380	FAHRERSITZ		
12	737022103	1	HEAD REST	KOPFSTUETZE		
13	553079914	1	HOSE CPL	SCHLAUCH KPL		
14	592007514	1	HOSE CPL	SCHLAUCH KPL		
15	10226510	1	BULKHEAD PLATE	SCHOTTPLATTE		
16	10223224	1	STEERING CONSOLE LEFT CPL	STEUERKONSOLE LI KPL		
17	11260956	1	STEERING CONSOLE RIGHT CPL ⇨ ❑ 383	STEUERKONSOLE RE KPL		
19	10541536	20	PAN-HEAD SCREW ISO 7045 M3X16 A2-70	FLACHKOPFSCHRAUBE		
20	420001014	28	WASHER ISO 7089 8 A4	SCHEIBE		
21	404403114	1	GRUB SCREW ISO 4026 M10X40 45H	GEWINDESTIFT		
22	406501714	14	HEX SCREW ISO 4017 M6X16 A4-70	SECHSKANTSCHRAUBE		
23	420000414	18	WASHER ISO 7089 6 A4	SCHEIBE		
24	4001967	2	COUNTERSUNK SCREW DIN 7991 M10X20 8.8	SENKSCHRAUBE		
25	406518714	12	HEX SCREW ISO 4017 M10X20 A4-70	SECHSKANTSCHRAUBE		
26	406501414	19	HEX SCREW ISO 4017 M8X25 A4-70	SECHSKANTSCHRAUBE		
27	420001114	6	WASHER ISO 7089 10 A4	SCHEIBE		
28	10541561	16	PAN-HEAD SCREW ISO 7045 M5X16 A2-70	FLACHKOPFSCHRAUBE		
29	485557714	12	HEX SCREW ISO 4017 M6X12 A4-70	SECHSKANTSCHRAUBE		
30	485550114	3	CAGE NUT M8-RR-123-47	KAEFIGMUTTER		
31	404206414	8	SOCKET HEAD SCREW ISO 4762 M8X20 A4-7	ZYLINDERSCHRAUBE		
32	411514614	1	HEX NUT ISO 4032 M10 A4-70	SECHSKANTMUTTER		
34	4002871	24	COUNTERSUNK SCREW ISO 7047 M4X20 4.8	SENKSCHRAUBE		
35	400180214	8	PAN-HEAD SCREW ISO 7045 M5X20 4.8	FLACHKOPFSCHRAUBE		
36	400180314	15	PAN-HEAD SCREW ISO 7045 M6X25 4.8	FLACHKOPFSCHRAUBE		
37	408606214	4	COUNTERSUNK SCREW DIN 7991 M8X20 A4-7	SENKSCHRAUBE		
38	411515014	4	HEX NUT ISO 4032 M8 A4-70	SECHSKANTMUTTER		
39	406501514	5	HEX SCREW ISO 4017 M8X16 A4-70	SECHSKANTSCHRAUBE		
40	10540511	8	WASHER ISO 7093-1 10 A4	SCHEIBE		
43	779002114	1	OUTSIDE MIRROR	AUSSENSPIEGEL		
44	970785703	1	SPIRIT LEVEL ASSY. ⇨ ❑ 384	LIBELLE EINBAU		
45	10537560	1	LAMP HOLDER CPL ⇨ ❑ 385	LEUCHTENHALTER KPL		
47	10540484	4	HEX NUT ISO 10511 M5 A4	SECHSKANTMUTTER		
48	10593544	2	COVER	DECKEL		
49	10593554	1	COVER	DECKEL		
50	485546514	12	HEX NUT ISO 4032 M3 A4-70	SECHSKANTMUTTER		
51	10549547	1	NAMEPLATE CONTROL PLATE	SCHILD STEUERPLATTE		
52	10549800	1	NAMEPLATE CONTROL PLATE	SCHILD STEUERPLATTE		
53	10549545	1	ADAPTER 5X84X90 PA 6	ADAPTER		
54	10591343	1	HOLDER	HALTER		
55	10526837	1	HEX SCREW ISO 4017 M6X50 A4-70	SECHSKANTSCHRAUBE		
56	411517114	1	HEX NUT ISO 4032 M6 A4-70	SECHSKANTMUTTER		
57	11309625	1	HOLDER CPL ⇨ ❑ 386	HALTER KPL		

OHNE BILD
WITHOUT ILLUSTRATION
SANS PLANCHE
SIN FIG.
SEM ILUSTRAÇÃO
БЕЗ ИЗОБРАЖЕНИЯ

600000

Pos.	Item	Quantity	Description	Bezeichnung	Serie	K
8	10559635	1	SWITCH CABINET X1 ⇨ ❑ 353	SCHALTSCHR X1		
10	10519079	1	CONTROL STAND LEFT ⇨ ❑ 356	STEUERSTAND LI		
20	11260957	1	CONTROL STAND RIGHT ⇨ ❑ 362	STEUERSTAND RE		
31	916525114	1	CABLE DUCT CABINET 1 ⇨ ❑ 363	KABELDURCHFUEHRUNG KABIN		
41	607147008	1	INTERNAL LIGHT	INNENLEUCHTE		
42	607021714	1	LIGHT BULB	GLUEHLAMPE		
43	607023214	1	LIGHT BULB	GLUEHLAMPE		
47	6003031	6	SLEEVE CONTACT	BUCHSENKONTAKT		
49	10224272	3	HOLDER	HALTER		
50	7027205	3	WORK LIGHT ⇨ ❑ 32	ARBEITSSCHEINWERFER		
51	605264814	3	PLUG	STECKER		
52	7368242	3	CONTACT LOCK	KONTAKTVERRIEGELUNG		
53	600454314	6.5	CONTROL LEAD	STEUERLEITUNG		
54	602305914	3	FLAT PLUG HOUSING	FLACHSTECKERGEHAEUSE		
55	602203914	6	FLAT PLUG	FLACHSTECKER		
61	611052614	1	FILTER BLOWER INSTALLATION ⇨ ❑ 364	FILTERLUEFTER EINBAU		
71	10350334	2	LOUDSPEAKER	LAUTSPRECHER		
74	614027114	1	EXTENSION CABLE	VERLAENGERUNGSKABEL		
76	11645490	1	ANTENNA	ANTENNE		
81	614046114	1	HOOTER	HUPE		

OHNE BILD
WITHOUT ILLUSTRATION
SANS PLANCHE
SIN FIG.
SEM ILUSTRAÇÃO
БЕЗ ИЗОБРАЖЕНИЯ

600000

Pos.	Item	Quantity	Description	Bezeichnung	Serie	K
83	11226627	1	SOUNDER	SCHALLGEBER		
85	10424276	1	TEMPERATURE SENSOR	TEMPERATURFUEHLER		
90	10524928	1	FLASHING LIGHT	BLITZLEUCHTE		
91	602209014	1	FLAT PLUG HOUSING	FLACHSTECKERGEHAEUSE		
92	602203914	6	FLAT PLUG	FLACHSTECKER		
93	6203137	1	BUSHING HOUSING	BUCHSENGEHAEUSE		
94	7368248	1	CONTACT LOCK	KONTAKTVERRIEGELUNG		
95	6003031	6	SLEEVE CONTACT	BUCHSENKONTAKT		
96	10542325	1	PROTECTING CAP	SCHUTZKAPPE		
97	693030914	2	CONTROL LEAD	STEUERLEITUNG		
98	10540846	1	WIRING HARNESS	KABELSTRANG		
100	10524927	1	SIGNAL LAMP	SIGNALLEUCHTE		
150	11234650	4	CABLE	KABEL		
201	10519082	1	CABLE LOOM W 19	KABELSTRANG W 19		
202	11261603	1	CABLE LOOM W 20	KABELSTRANG W 20		
203	10519084	1	WIRING HARNESS	KABELSTRANG		
204	10519085	1	CABLE LOOM W 22	KABELSTRANG W 22		
210	11223717	2	FOOT PEDAL	FUSSPEDAL		
211	11223691	1	FOOT PEDAL EL INSTALLATION ⇨ ❑ 365	FUSSPEDAL EL EINBAU		
212	11273458	2	ROD CPL	STANGE KPL		

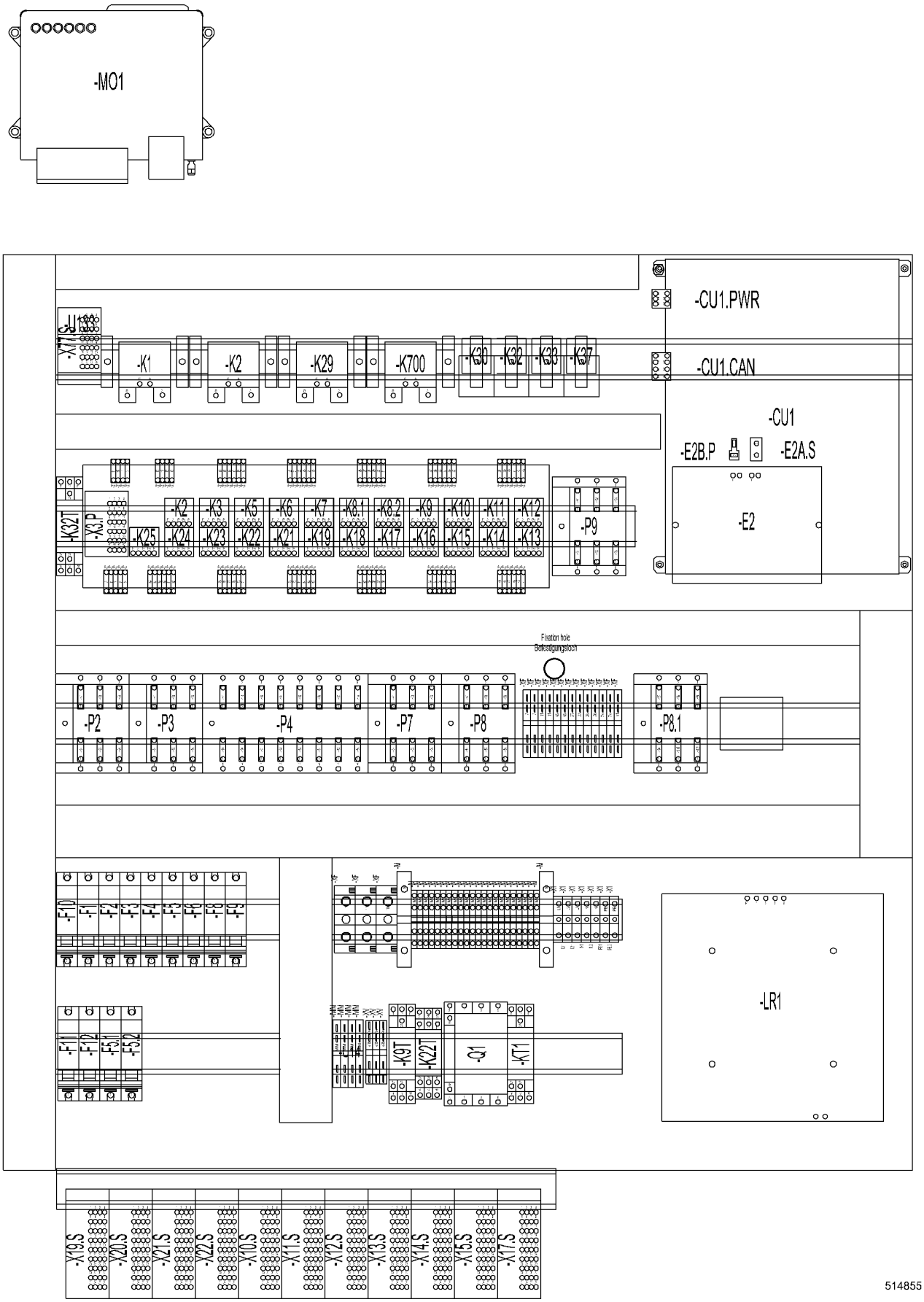
-M01
-CU1.PWR
-CU1.CAN
-CU1
-E2B.P
-E2A.S
-E2
-P9
-P2
-P3
-P4
-P7
-P8
-P8.1
Fixation hole
Befestigungsloch
-LR1
514855

Pos.	Item	Quantity	Description	Bezeichnung	Serie	K
21	10526962	1	SUBPLATE	MONTAGEPLATTE		
25	10559638	1	CABLE LOOM W 10	KABELSTRANG W 10		
31	10223180	1	CONTROL SYSTEM	STEUERRECHNER		
32	10541109	1	DATA CARD CF2	DATEN KARTE CF2		
41	607147008	1	INTERNAL LIGHT	INNENLEUCHTE		
42	607021714	1	LIGHT BULB	GLUEHLAMPE		
43	607023214	1	LIGHT BULB	GLUEHLAMPE		
51	917585714	1	PC-BOARD PLATE 1	STECKKARTE PLATINE 1		
56	992081114	1	RESERVE FUSES ⇨ ❑ 355	RESERVESICHERUNGEN		
57	10529597	1	BUSBAR	SAMMELSCHIENE		
58	11219647	1	BUSBAR	SAMMELSCHIENE		
59	10351108	2	CONTACT GUARD	BERUEHRUNGSSCHUTZ		
60	10351101	1	CABLE PROTECTION SWITCH	LEITUNGSSCHUTZSCHALTER		
61	10351102	3	CABLE PROTECTION SWITCH	LEITUNGSSCHUTZSCHALTER		
62	10351103	1	CABLE PROTECTION SWITCH	LEITUNGSSCHUTZSCHALTER		
63	10351104	2	CABLE PROTECTION SWITCH	LEITUNGSSCHUTZSCHALTER		
64	10351105	1	CABLE PROTECTION SWITCH	LEITUNGSSCHUTZSCHALTER		
65	10351106	3	CABLE PROTECTION SWITCH	LEITUNGSSCHUTZSCHALTER		
68	604105314	5	FUSE CARTRIDGE	SICHERUNGSEINSATZ		
69	604105514	41	FUSE CARTRIDGE	SICHERUNGSEINSATZ		
70	604105614	6	FUSE CARTRIDGE	SICHERUNGSEINSATZ		
71	693181114	3	SERIES TERMINAL	REIHENKLEMME		
72	602832314	1	PARTITION	TRENNWAND		
73	693138614	1	CROSS CONNECTOR	QUERVERBINDER		
74	602153814	13	SERIES TERMINAL	REIHENKLEMME		
75	10550739	22	SERIES TERMINAL	REIHENKLEMME		
78	693182314	2	CLOSING PLATE	ABSCHLUSSPLATTE		
79	10227563	2	INSULATING ELEMENT	ISOLIERSTUECK		
80	602153814	4	SERIES TERMINAL	REIHENKLEMME		
81	630120108	4	CUTOFF RELAY	TRENNRELAIS		
83	630121508	1	CENTER-ZERO RELAY	WECHSLERRELAIS		
84	630122908	1	RELAY SOCKET	RELAIS STECKSOCKEL		
85	630170014	1	TIME RELAY	ZEITRELAIS		
86	602151914	4	SERIES TERMINAL	REIHENKLEMME		
87	602812714	1	CLOSING PLATE	ABSCHLUSSPLATTE		
88	602812414	1	CROSS CONNECTOR	QUERVERBINDER		
91	693183914	1	VOLTAGE TRANSFORMER	SPANNUNGSWANDLER		
92	602208714	1	FLAT PLUG HOUSING	FLACHSTECKERGEHAEUSE		
93	602209714	1	ATTACHABLE SLEEVE HOUSING	STECKHUELSENGEHAEUSE		
201	605253314	11	PLUG	STECKER		
203	605254214	11	PLUG	STECKER		
211	605253414	1	PLUG	STECKER		
213	605254114	1	PLUG	STECKER		

OHNE BILD
WITHOUT ILLUSTRATION
SANS PLANCHE
SIN FIG.
SEM ILUSTRAÇÃO
БЕЗ ИЗОБРАЖЕНИЯ

600000

Pos.	Item	Quantity	Description	Bezeichnung	Serie	K
2	10227556	1	FUSE ASSAYER	SICHERUNGSPRUEFER		
5	604105314	5	FUSE CARTRIDGE	SICHERUNGSEINSATZ		
7	604105414	5	FUSE CARTRIDGE	SICHERUNGSEINSATZ		
10	604105514	10	FUSE CARTRIDGE	SICHERUNGSEINSATZ		
15	604105614	5	FUSE CARTRIDGE	SICHERUNGSEINSATZ		
21	10224306	2	FUSE CARTRIDGE	SICHERUNGSEINSATZ		
22	10224307	2	FUSE CARTRIDGE	SICHERUNGSEINSATZ		

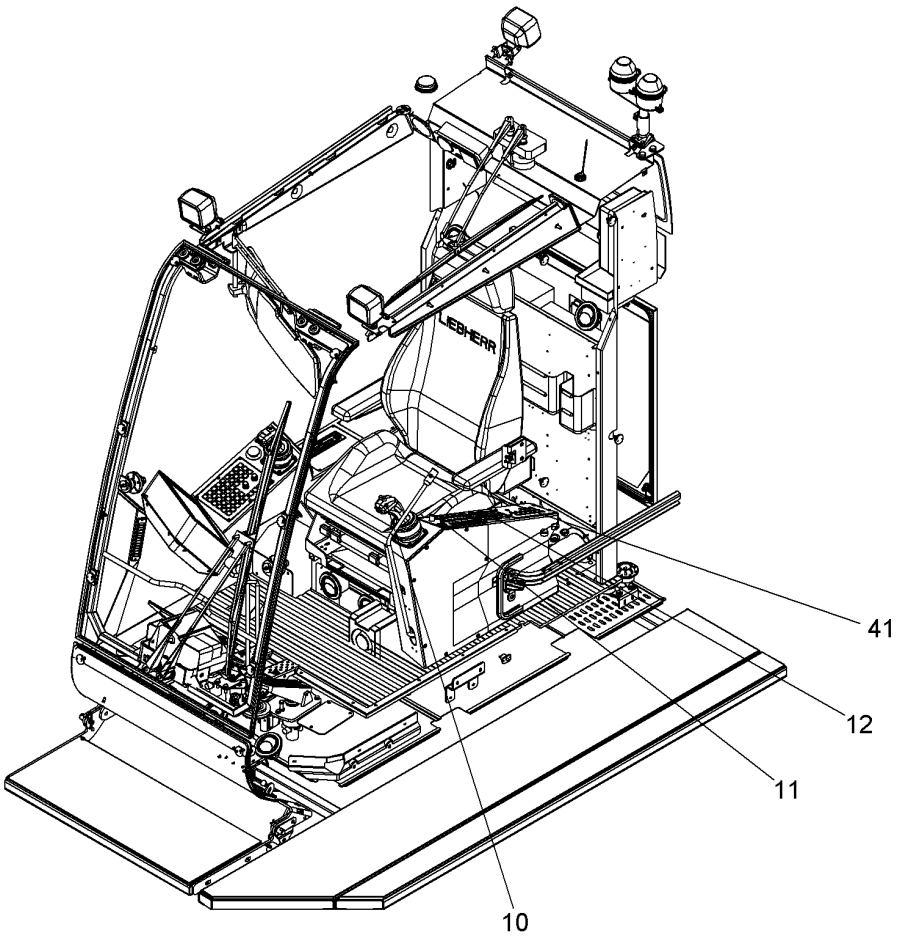

Pos.	Item	Quantity	Description	Bezeichnung	Serie	K
10	11214818	1	MASTER SWITCH ⇨ ❑ 357	MEISTERSCHALTER		
11	10036107	1	KEYBOARD OPERATING PANEL CPL ⇨ ❑ 358	TASTATUR BEDIENPULT X11 KP		
12	10531718	1	KEYBOARD ⇨ ❑ 359	TASTATUR		
31	10599206	1	OPERATING HOURS COUNTER	BETRIEBSSTUNDENZAEHLER		
32	10599215	1	ADAPTER FRAME	ADAPTERRAHMEN		
41	693168514	1	SAFETY LEVER CPL ⇨ ❑ 361	SICHERHEITSHEBEL KPL		

OHNE BILD
WITHOUT ILLUSTRATION
SANS PLANCHE
SIN FIG.
SEM ILUSTRAÇÃO
БЕЗ ИЗОБРАЖЕНИЯ

600000

Pos.	Item	Quantity	Description	Bezeichnung	Serie	K
1	606272314	1	RUBBER BELLOWS	FALTENBALG		

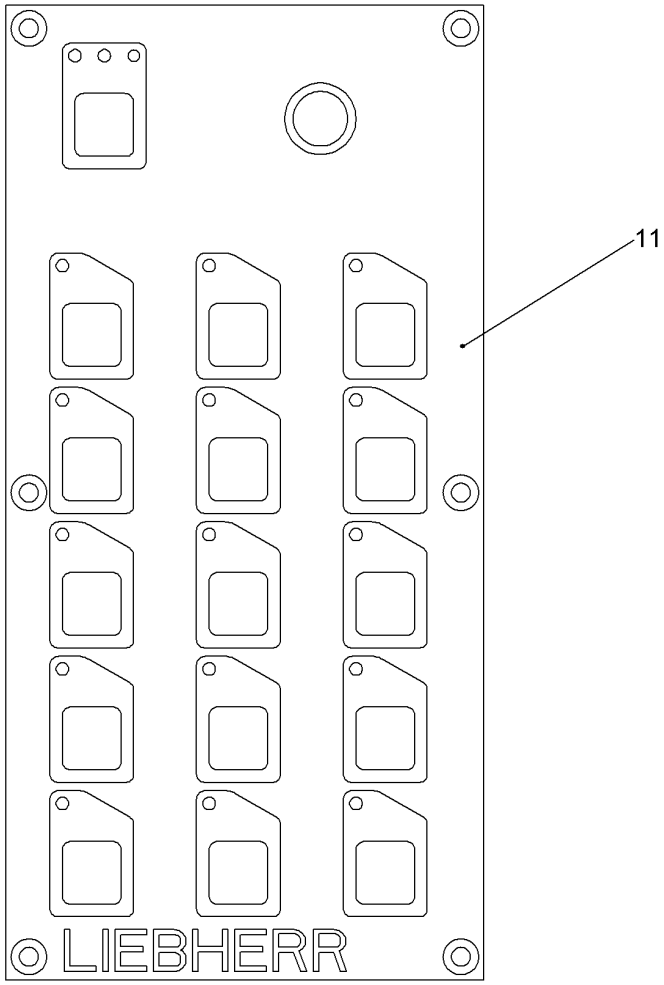

Pos.	Item	Quantity	Description	Bezeichnung	Serie	K
11	612436814	1	CONTROL AREA	BEDIENFELD		
80	10687925	1	TURNING KNOB	DREHKNOPF		
81	10687926	1	WASHER	SCHEIBE		
82	10687924	1	COVER	DECKEL		

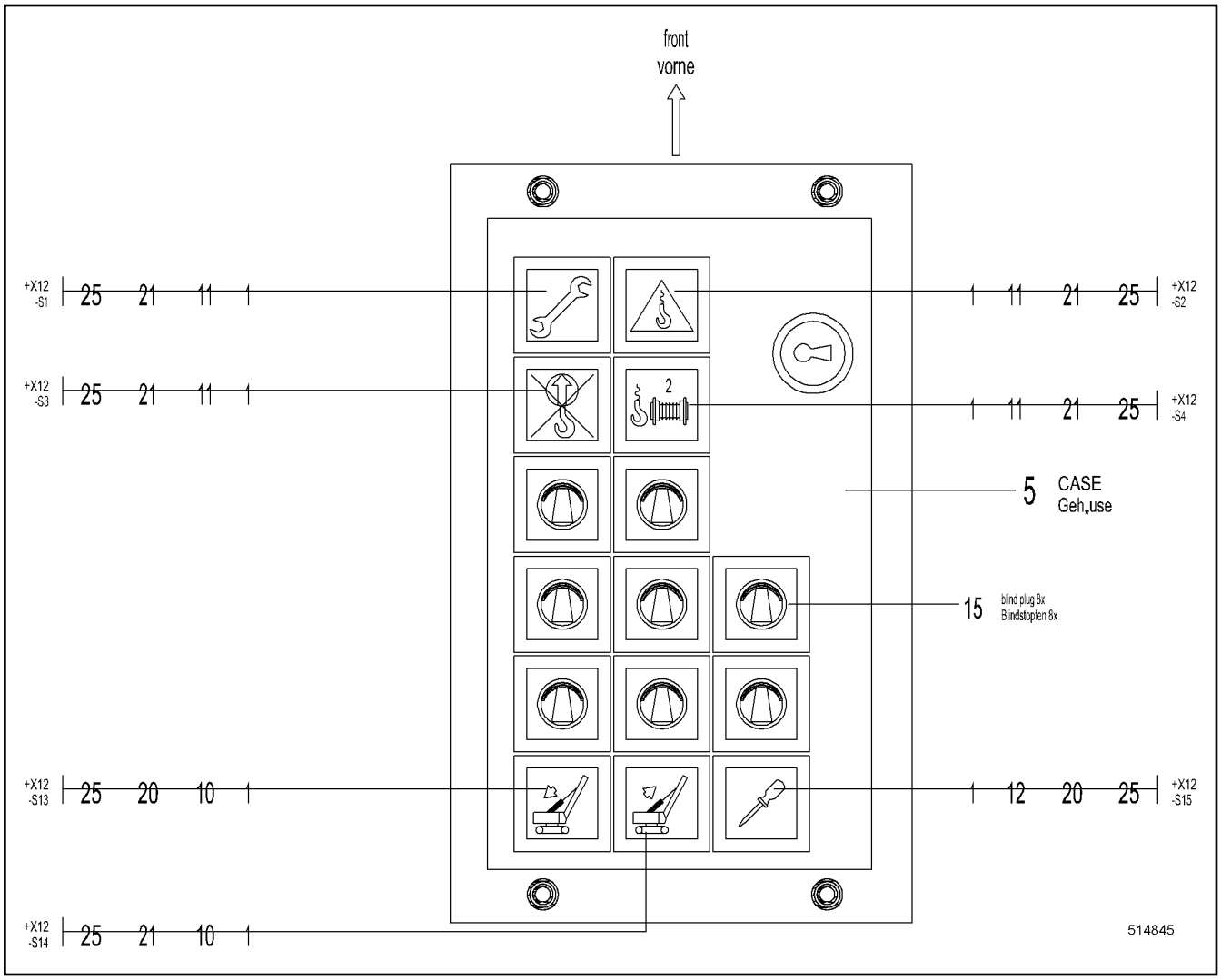

Pos.	Item	Quantity	Description	Bezeichnung	Serie	K
5	385094414	1	SWITCHING HOUSING ⇨ ❑ 360	SCHALTERGEHAEUSE		
10	606672114	2	ILLUMINATED BUTTON	LEUCHTTASTER		
11	606674714	4	ILLUMINATED BUTTON	LEUCHTTASTER		
12	606667814	1	ILLUMINATED BUTTON	LEUCHTTASTER		
15	602458214	8	STOPPER PLUG	BLINDSTOPFEN		
20	6204372	2	LUMINOUS PUSH BUTTON CONTACTOR	LEUCHTTASTKONTAKTGEBER		
21	6001593	5	LUMINOUS SWITCH CONTACT SENDER	LEUCHTSCHALTKONTAKTGEBE		
25	260514602	7	LED LAMP	LED-LAMPE		
30	400180214	4	PAN-HEAD SCREW ISO 7045 M5X20 4.8	FLACHKOPFSCHRAUBE		

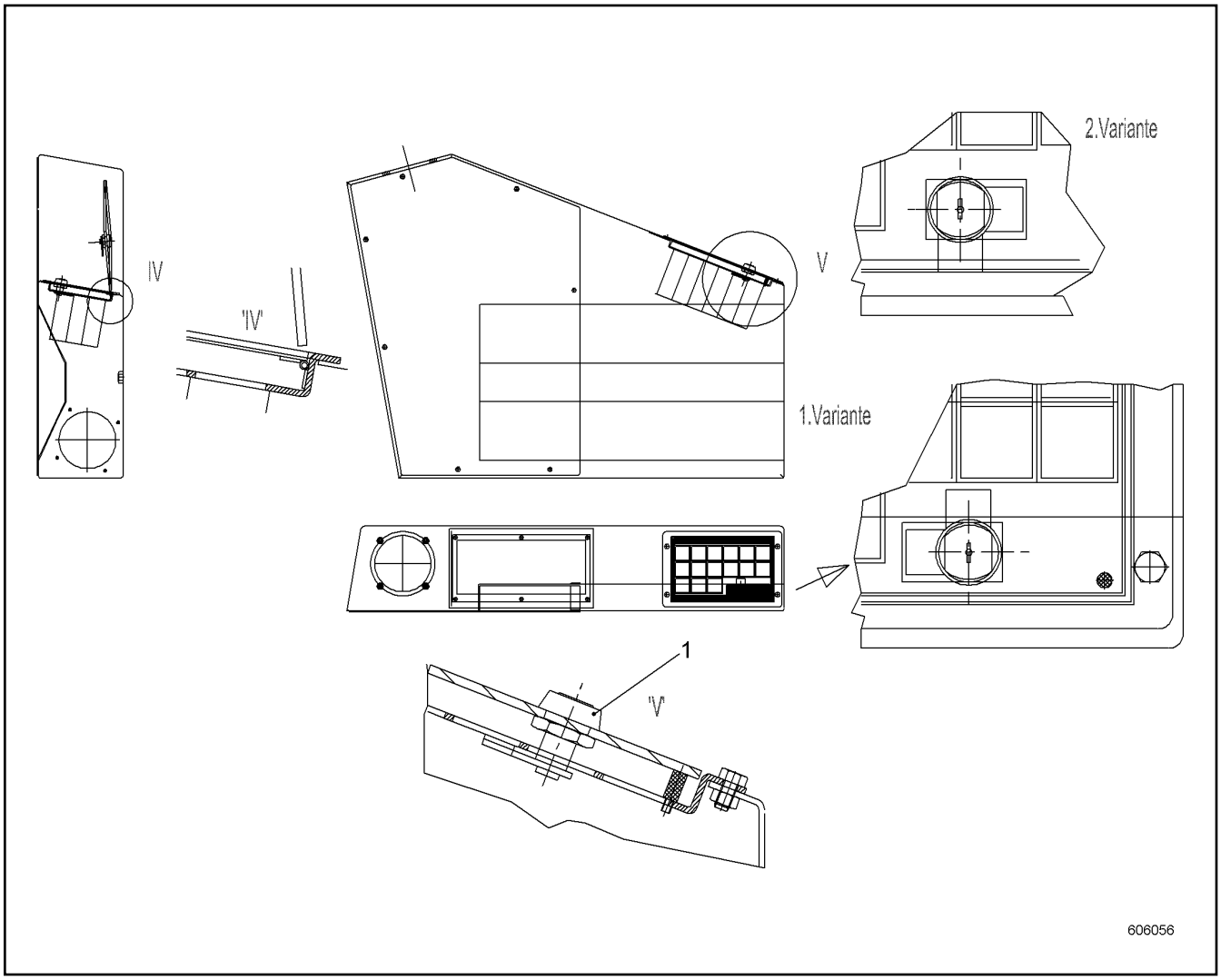

Pos.	Item	Quantity	Description	Bezeichnung	Serie	K
1	10542435	1	CYL LOCK	ZYL VERSCHLUSS		

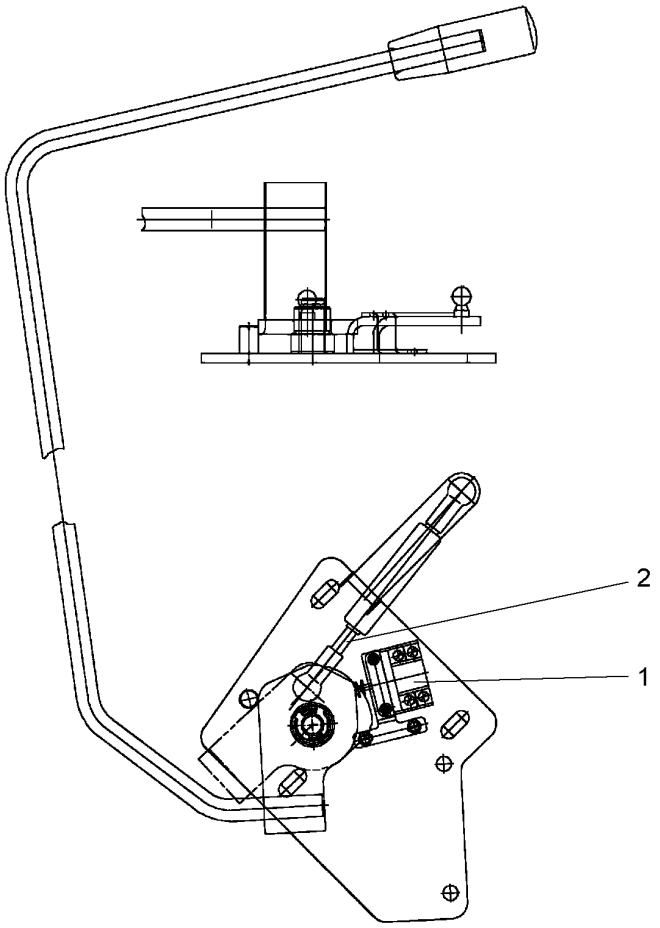

Pos.	Item	Quantity	Description	Bezeichnung	Serie	K
1	10445976	1	SWITCH	SCHALTER		
2	10800103	1	GAS OPERATED SPRING	GASDRUCKFEDER		

OHNE BILD
WITHOUT ILLUSTRATION
SANS PLANCHE
SIN FIG.
SEM ILUSTRAÇÃO
БЕЗ ИЗОБРАЖЕНИЯ

600000

Pos.	Item	Quantity	Description	Bezeichnung	Serie	K
23	10677274	1	CAN MODULE	CAN MODUL		
24	11260077	1	MONITOR LCD CPL	MONITOR LCD KPL		
31	740732003	1	IGNITION STARTER SWITCH	ZUENDSTARTSCHALTER		
32	10663904	1	ANTITHEFT LOCK	WEGFAHRSPERRE		
33	693073014	1	EMERGENCY STOP BUTTON	NOT-AUS TASTER		
35	606718408	1	EMERGENCY STOP SIGN	SCHILD NOT-AUS		
50	10663954	2	KEY	SCHLUESSEL		

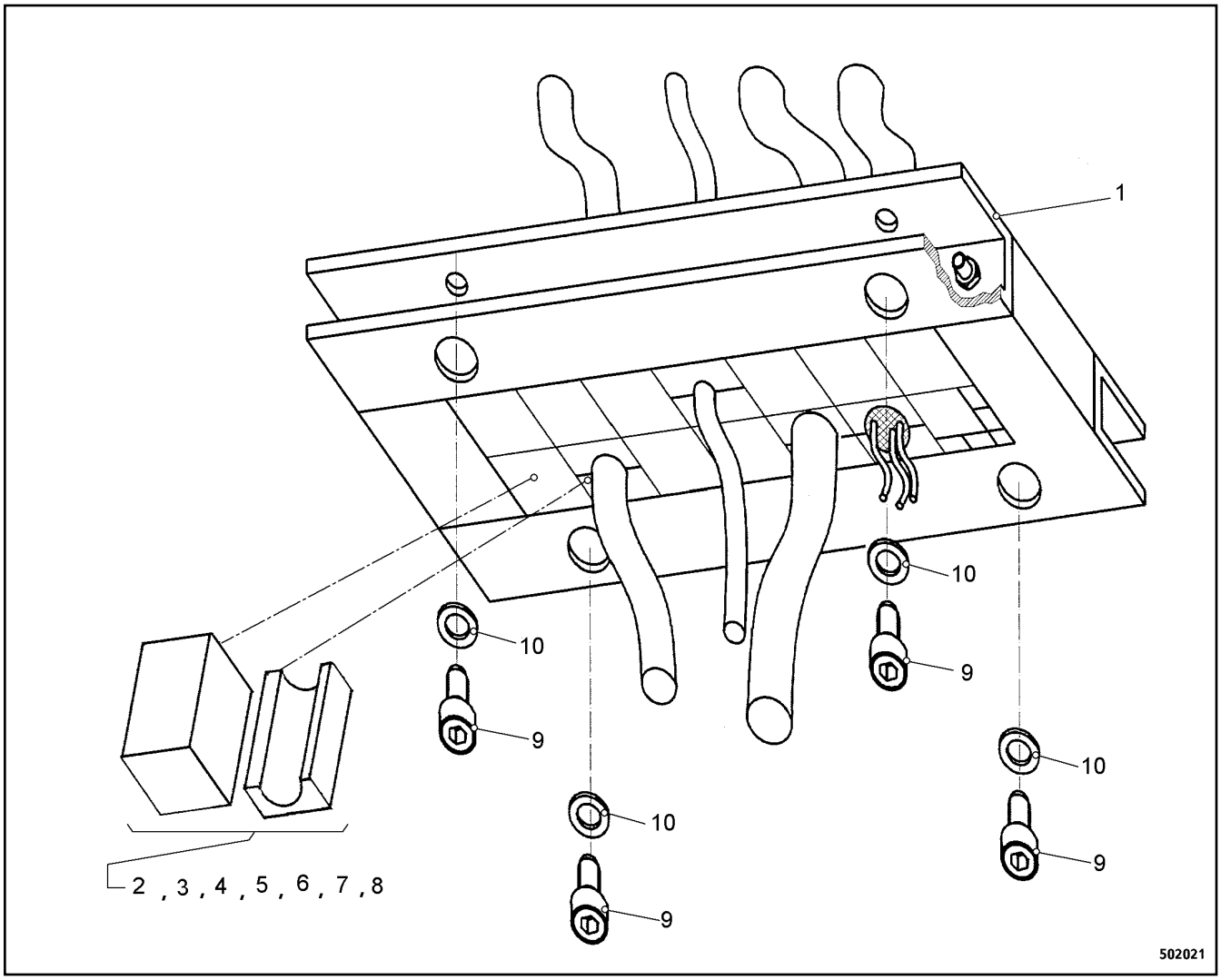

Pos.	Item	Quantity	Description	Bezeichnung	Serie	K
1	602481914	1	FRAME	RAHMEN		
2	602454614	2	SEALING MODULE	DICHTUNGSMODUL		
3	602457014	2	SEALING MODULE	DICHTUNGSMODUL		
4	602454714	2	SEALING MODULE	DICHTUNGSMODUL		
5	602453214	2	SEALING MODULE	DICHTUNGSMODUL		
6	602457114	2	SEALING MODULE	DICHTUNGSMODUL		
7	602457214	2	SEALING MODULE	DICHTUNGSMODUL		
8	602453914	2	SEALING MODULE	DICHTUNGSMODUL		
9	10539483	4	SOCKET HEAD SCREW ISO 4762 M8X16 A4-7	ZYLINDERSCHRAUBE		
10	10447017	4	LOCKING RING 8	SICHERUNGSRING		

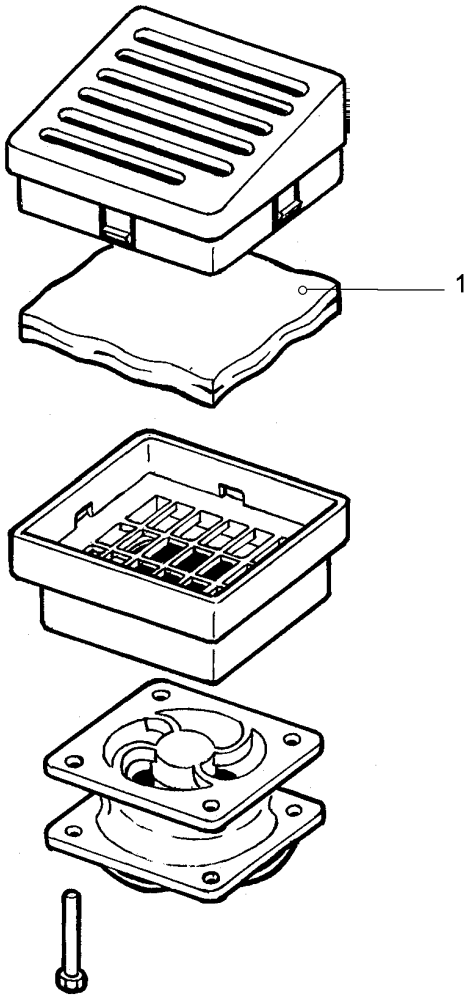

Pos.	Item	Quantity	Description	Bezeichnung	Serie	K
1	611124514	1	FILTER MAT	FILTERMATTE		

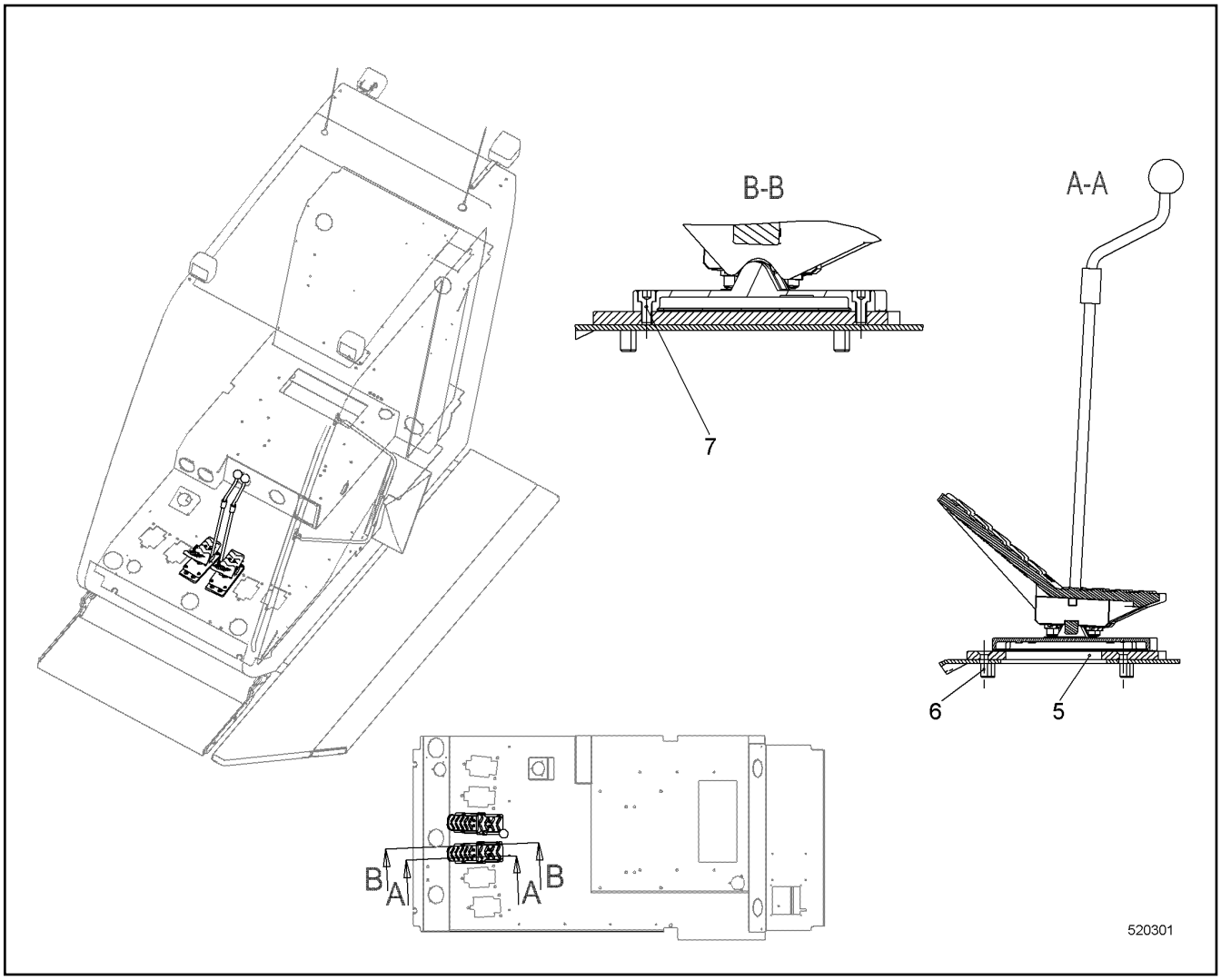

Pos.	Item	Quantity	Description	Bezeichnung	Serie	K
5	11223693	2	ADAPTER PLATE	ADAPTERBLECH		
6	408600708	8	COUNTERSUNK SCREW ISO 10642 M8X30 8.8	SENKSCHRAUBE		
7	408301208	8	SOCKET HEAD SCREW DIN 7984 M8X16 8.8	ZYLINDERSCHRAUBE		

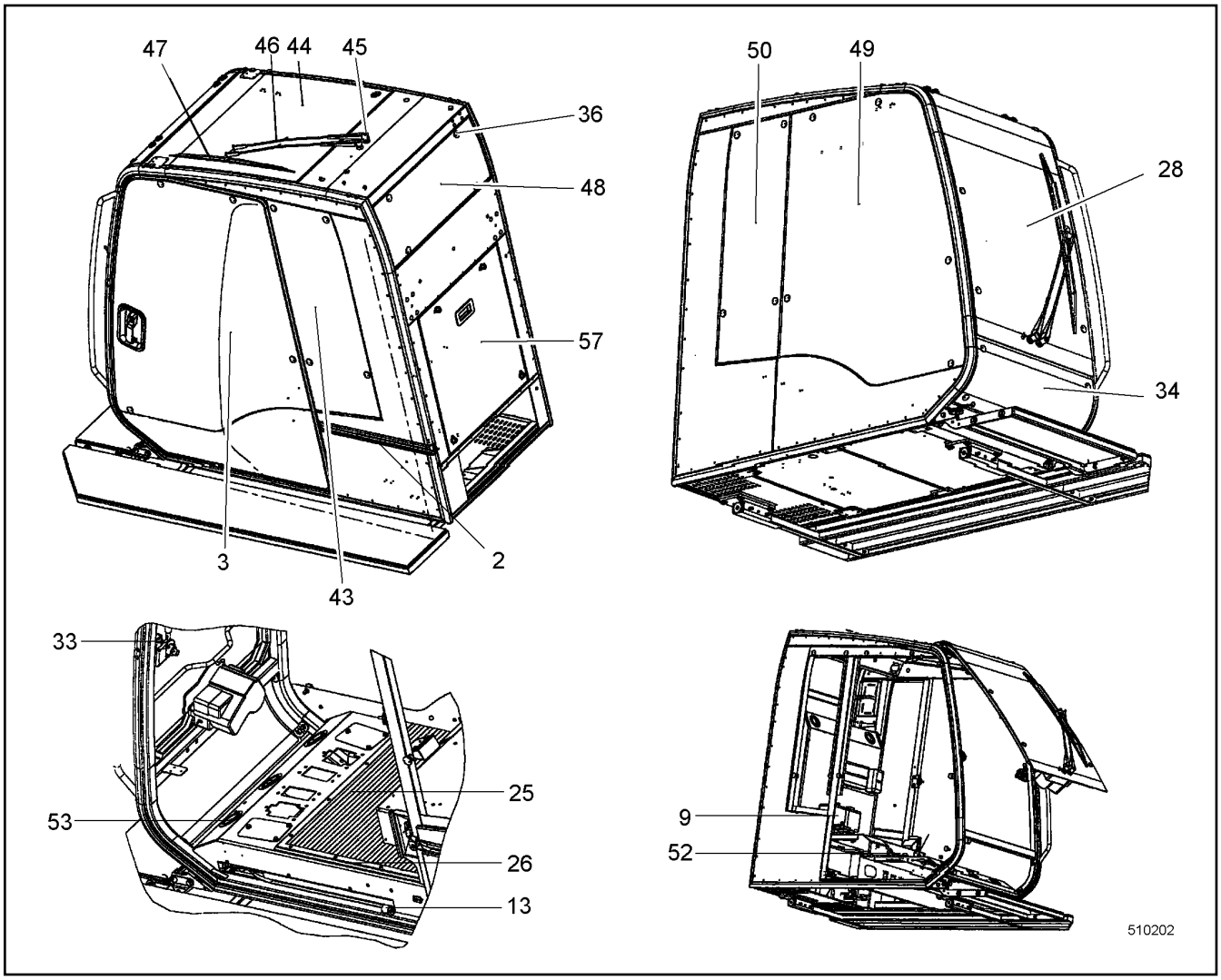

Pos.	Item	Quantity	Description	Bezeichnung	Serie	K
2	10226454	1	DOOR ACCESSORIES ⇨ ❑ 368	TUERE ZUBEHOEHR		
3	10501333	1	SLIDING DOOR ⇨ ❑ 370	SCHIEBETUER		
9	592286714	2	CONTAINER	BEHAELTER		
13	592286814	1	BUFFER	PUFFER		
25	592286914	1	FLOOR MAT	BODENMATTE		
26	592287014	1	STRIP	LEISTE		
28	592287114	1	FRONT WINDOW CPL ⇨ ❑ 373	FRONTSCHEIBE KPL		
33	592288314	1	BALL PIVOT	KUGELZAPFEN		
34	592288414	1	FRONT WINDOW CPL	FRONTSCHEIBE KPL		
36	592286514	1	FLANGE JOINT	VERSCHRAUBUNG		
43	592288514	1	SIDE PANE LEFT	SEITENSCHEIBE LI		
44	592288614	1	ROOF WINDOW	DACHSCHEIBE		
45	592288714	1	WIPER MOTOR	WISCHERMOTOR		
46	592288814	1	WIPER ARM	WISCHARM		
47	592288914	1	WIPER BLADE	WISCHERBLATT		
48	592289014	1	REAR WINDOW	HECKSCHEIBE		
49	592289114	1	SIDE PANE RIGHT	SEITENSCHEIBE RE		
50	592289214	1	SIDE PANE RIGHT	SEITENSCHEIBE RE		
52	592289314	1	AIR NOZZLE	LUFTDUESE		
53	10352465	1	AIR NOZZLE	LUFTDUESE		
57	10352672	1	FLAP CPL ⇨ ❑ 374	KLAPPE KPL		

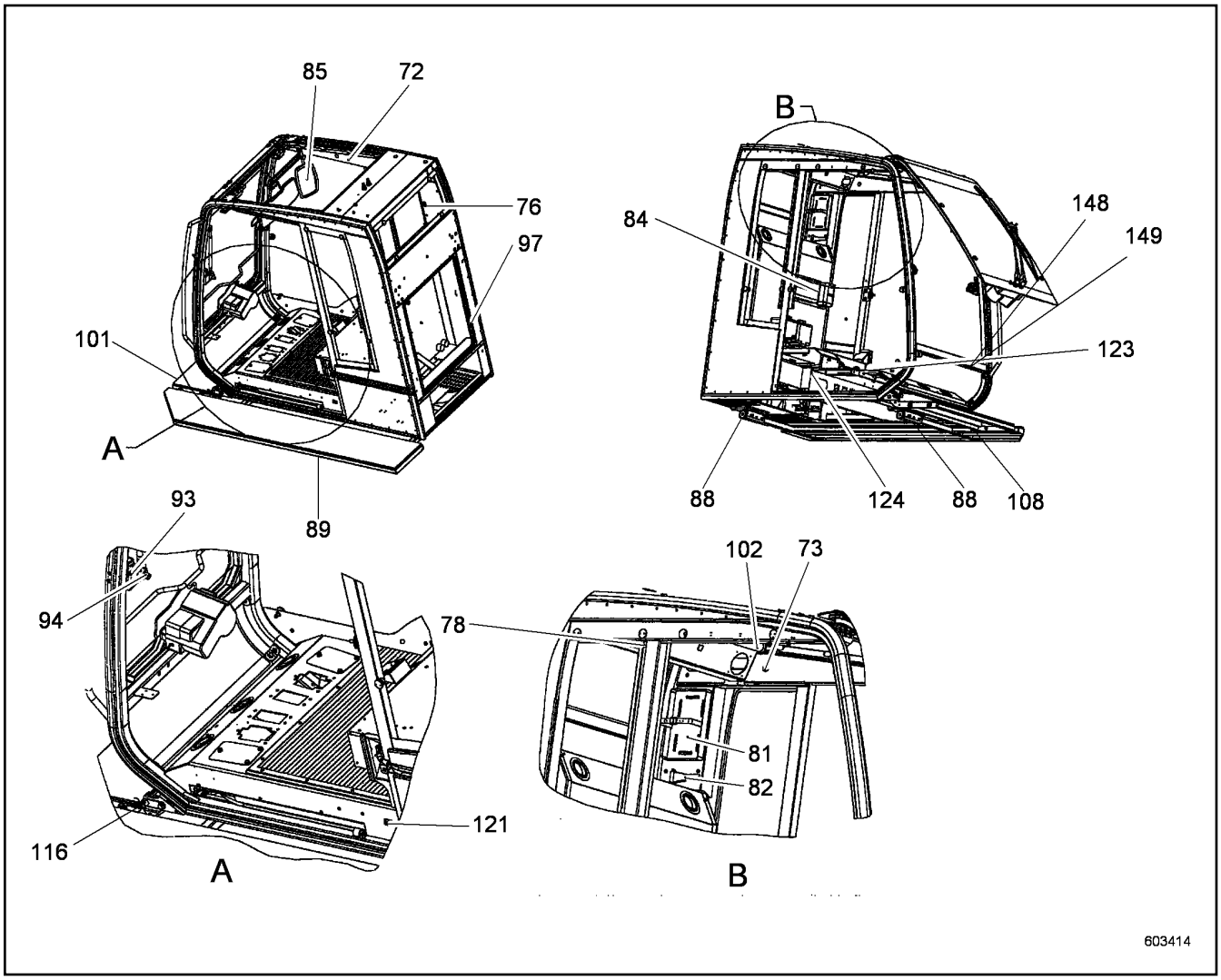

Pos.	Item	Quantity	Description	Bezeichnung	Serie	K
72	592289814	1	PANELLING RIGHT	VERKLEIDUNG RE		
73	592289914	1	MUSHROOM BUTTON	PILZKNOPF		
76	592290014	1	COAT HOOK	GARDEROBEHAKEN		
78	592290114	1	COVERS	VERKLEIDUNG		
81	592290214	1	HOLDER	HALTER		
82	592290314	1	HOLDER	HALTER		
84	592290414	1	HOLDER	HALTER		
85	592290514	1	MIRROR + SUNN VISOR ⇨ ❑ 375	SPIEGEL + SONNENBLENDE		
88	10512821	2	GUIDE	FUEHRUNG		
89	10512061	1	PEDESTAL	PODEST		
93	592290914	1	SEAL	DICHTUNG		
94	592291014	1	SNIB	FESTSTELLER		
97	592291114	1	PROFILE	PROFIL		
101	10512048	1	PEDESTAL	PODEST		
102	592291214	1	SUNSHADE	SONNENROLLO		
108	592291314	1	LIMIT STOP BUFFER	ANSCHLAGPUFFER		
116	592291414	1	PLATFORM FIXATION CPL ⇨ ❑ 376	PODESTSICHERUNG KPL		
121	592291814	1	SWITCH	SCHALTER		
123	592291914	1	OPERATIONAL CONTROL	BEDIENELEMENT		
124	592293014	1	AIR CONDITIONER ⇨ ❑ 377	KLIMAGERAET		
148	10351728	1	SEALING PROFILE	DICHTUNGSPROFIL		
149	10351729	1	SEALING PROFILE	DICHTUNGSPROFIL		

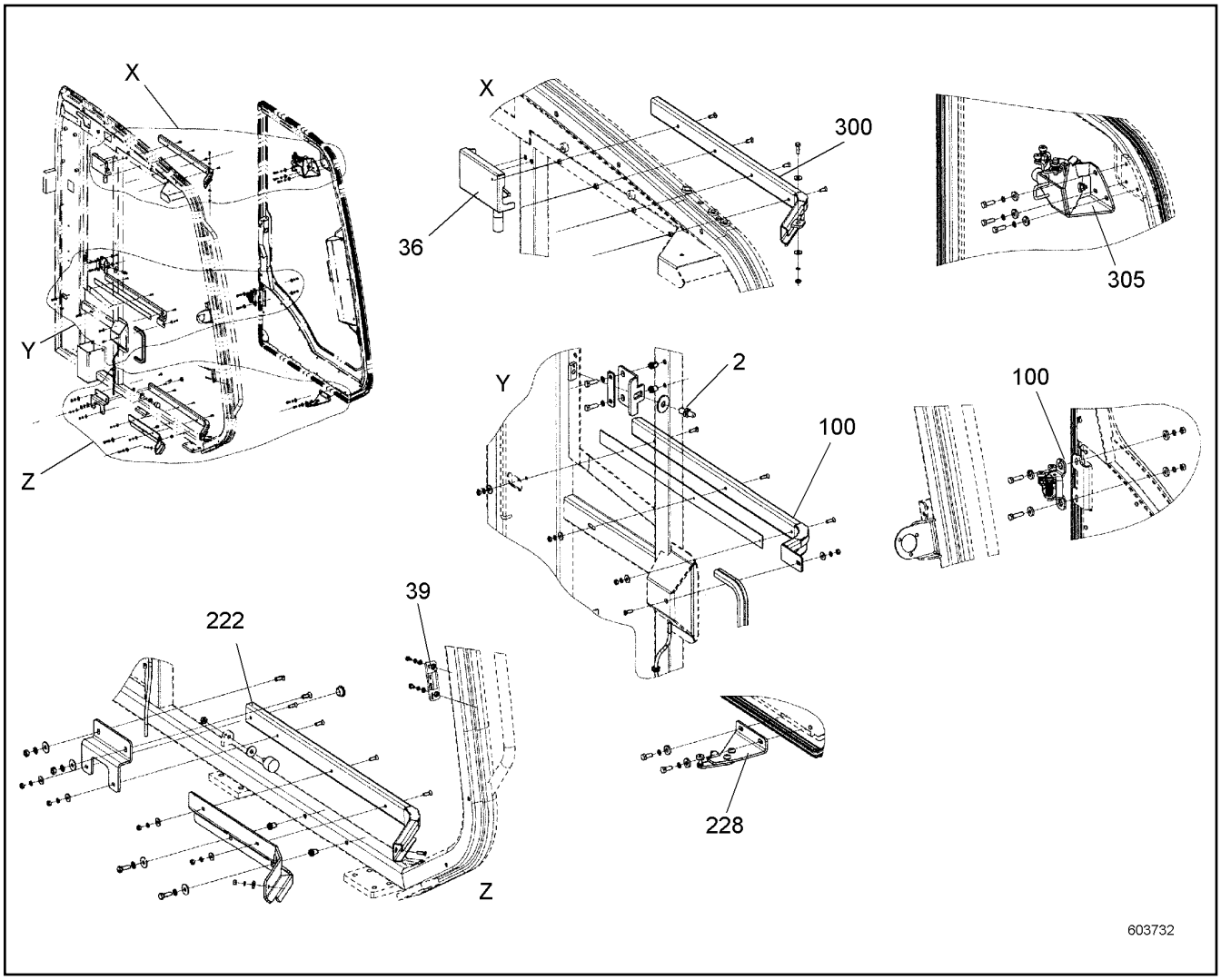

Pos.	Item	Quantity	Description	Bezeichnung	Serie	K
2	7615720	1	CLOSING PIN	SCHLIESSBOLZEN		
36	10572075	1	LOCKING	VERRIEGELUNG		
39	10447259	1	SHEET	PLATTE		
100	959576314	1	GUIDE CPL ⇨ ❑ 369	FUEHRUNG KPL		
222	10226459	1	GUIDING RAIL	FUEHRUNGSSCHIENE		
228	10226461	1	GUIDING BRACKET BELOW	FUEHRUNGSKONSOLE UNTEN		
300	10226462	1	GUIDING RAIL	FUEHRUNGSSCHIENE		
305	10226463	1	GUIDING BRACKET ABOVE	FUEHRUNGSKONSOLE OBEN		

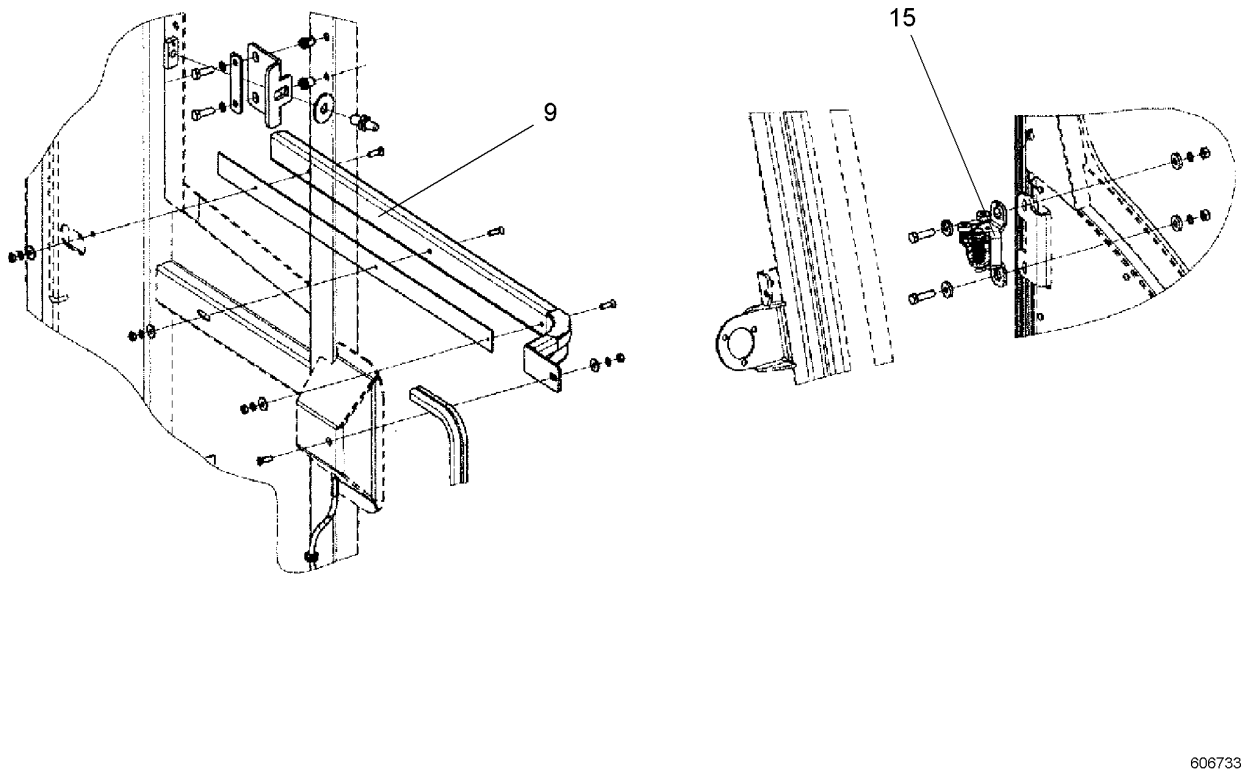

Pos.	Item	Quantity	Description	Bezeichnung	Serie	K
9	10226457	1	GUIDING RAIL	FUEHRUNGSSCHIENE		
15	10226458	1	GUIDING BRACKET CENTRE	FUEHRUNGSKONSOLE MITTE		

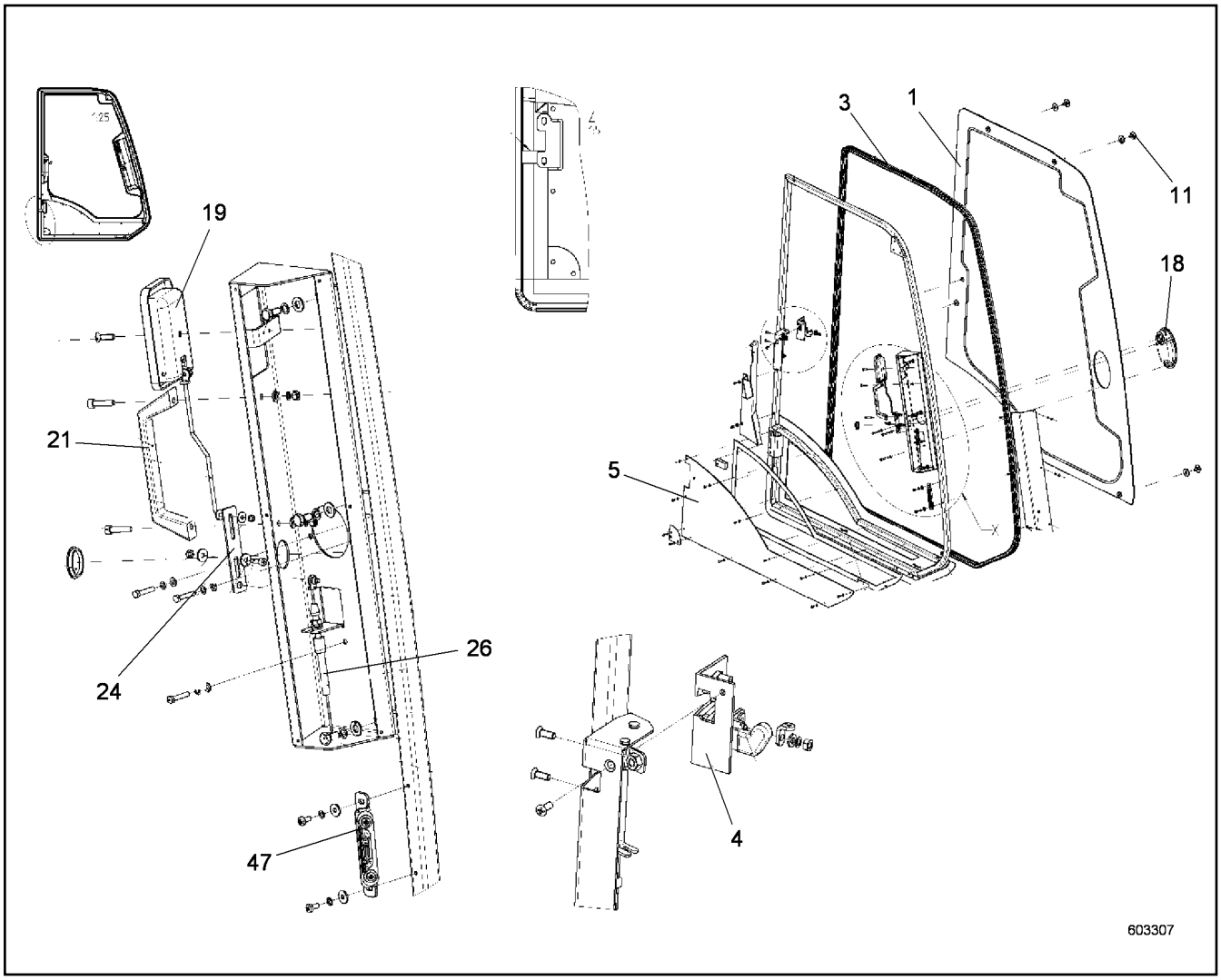

Pos.	Item	Quantity	Description	Bezeichnung	Serie	K
1	10224413	1	SLIDING WINDOW ⇨ ❑ 371	SCHIEBEFENSTER		
3	592285714	1	DOOR SEAL	TUERDICHTUNG		
4	592285814	1	ROTARY LOCK	DREHSCHLOSS		
5	10226479	1	ORIFICE	BLENDE		
11	592286514	5	FLANGE JOINT	VERSCHRAUBUNG		
18	10226472	1	GRIP SHELL	GRIFFSCHALE		
19	10226473	1	DOOR HANDLE INTERNAL	TUERGRIFF INNEN		
21	10226478	1	DOOR HANDLE INTERNAL	TUERGRIFF INNEN		
24	10226477	1	SHEET	PLATTE		
26	592286314	1	ROPE PULL	SEILZUG		
47	10447258	1	KEY COLLAR	SCHLIESSKEIL		

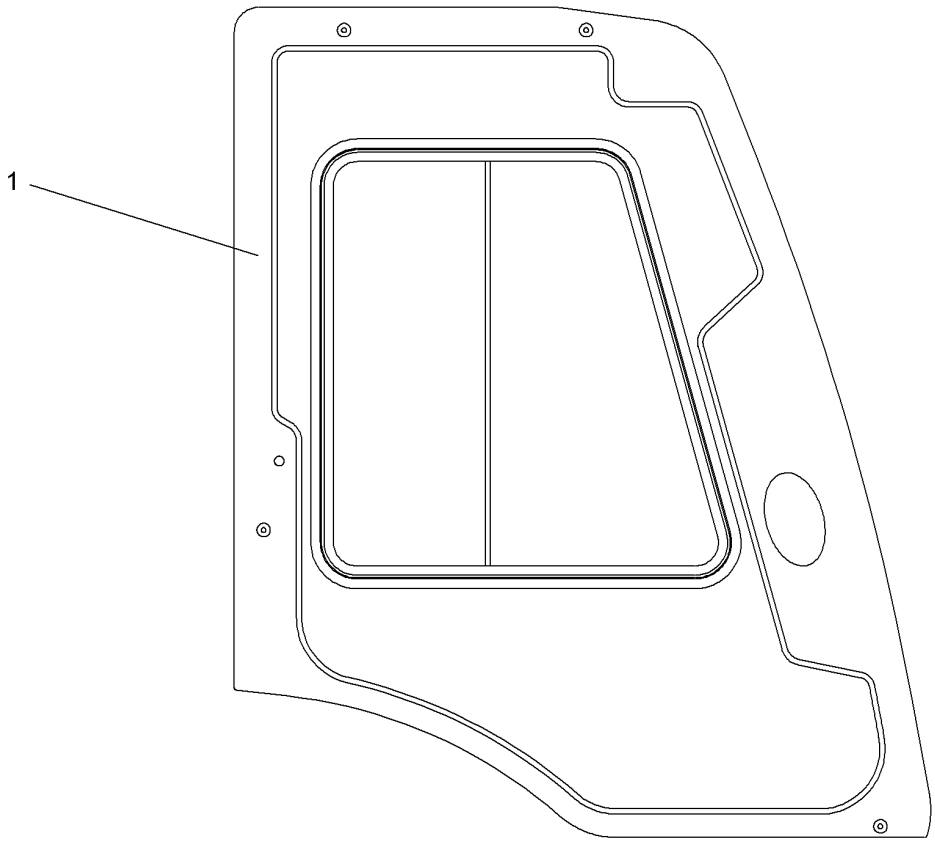

Pos.	Item	Quantity	Description	Bezeichnung	Serie	K
1	11279012	1	DOOR PANE ⇨ ❑ 372	TUERSCHEIBE		

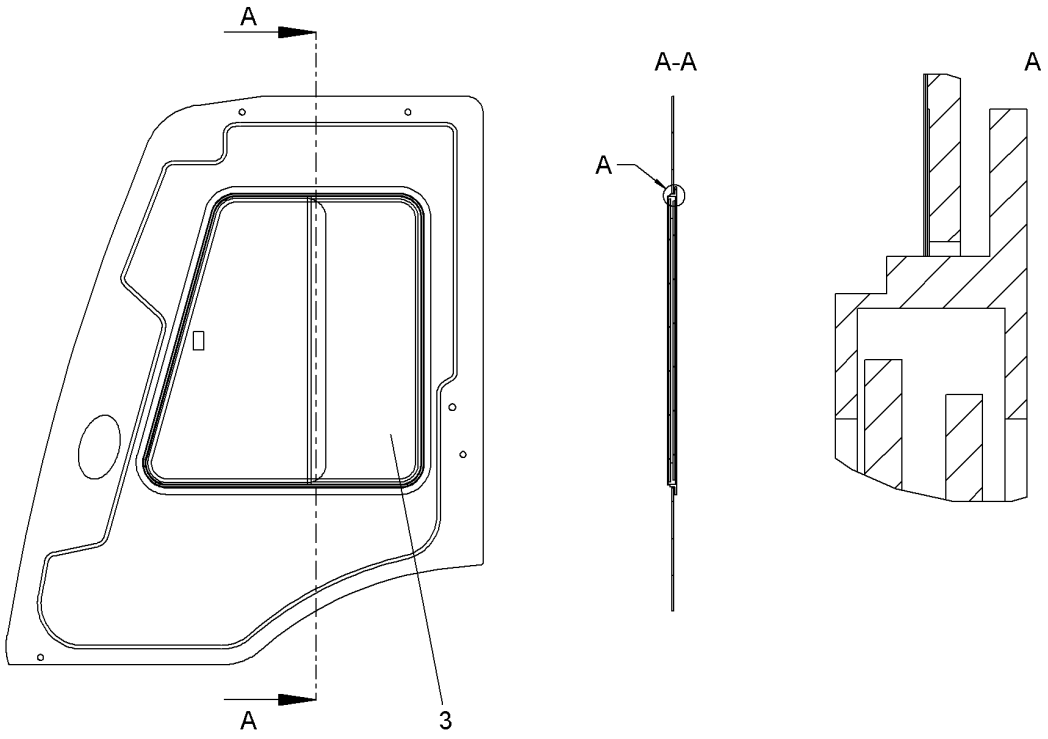

Pos.	Item	Quantity	Description	Bezeichnung	Serie	K
3	11250970	1	SLIDING WINDOW	SCHIEBEFENSTER		

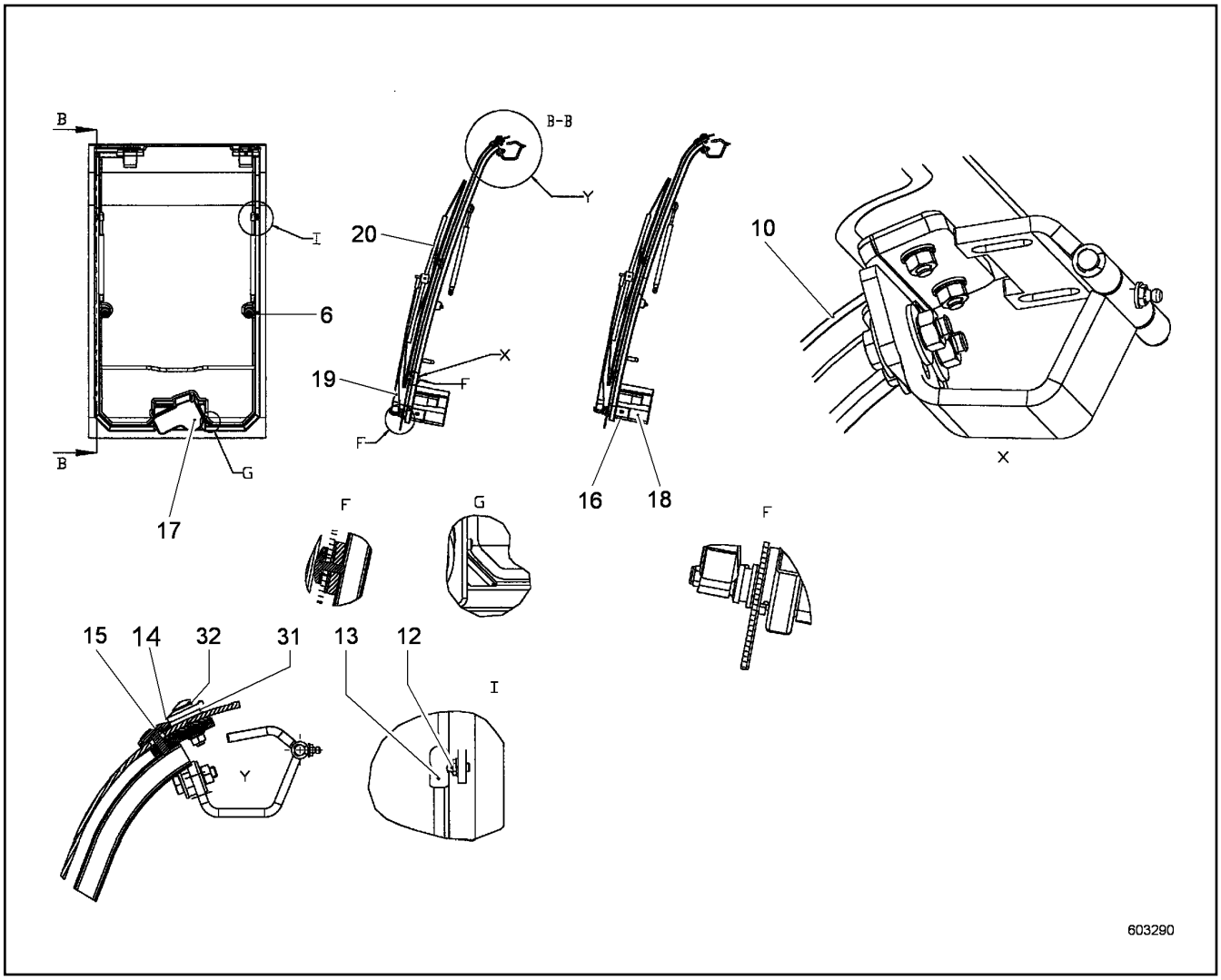

Pos.	Item	Quantity	Description	Bezeichnung	Serie	K
1	11281448	1	FRAME	RAHMEN		
4	10522188	1	WASHER	SCHEIBE		
5	10522190	1	RUBBER	GUMMI		
6	592333714	1	CLOSING PIN	SCHLIESSBOLZEN		
7	10522189	1	SHEET	PLATTE		
10	592287214	1	FRONT WINDOW	FRONTSCHEIBE		
12	592288314	1	BALL PIVOT	KUGELZAPFEN		
13	592287414	1	GAS SPRING	GASFEDER		
14	10226471	1	DISTANCE WASHER	DISTANZSCHEIBE		
15	592287514	1	SCREW	SCHRAUBE		
16	592287614	1	WIPER MOTOR	WISCHERMOTOR		
17	592287714	1	ELBOW PIECE	WINKELSTUECK		
18	592287814	1	COVER	ABDECKUNG		
19	592287914	1	WIPER ARM	WISCHARM		
20	592288014	1	WIPER BLADE	WISCHERBLATT		
31	592288114	1	SHEET GASKET	DICHTSCHEIBE		
32	592288214	1	WASHER	SCHEIBE		

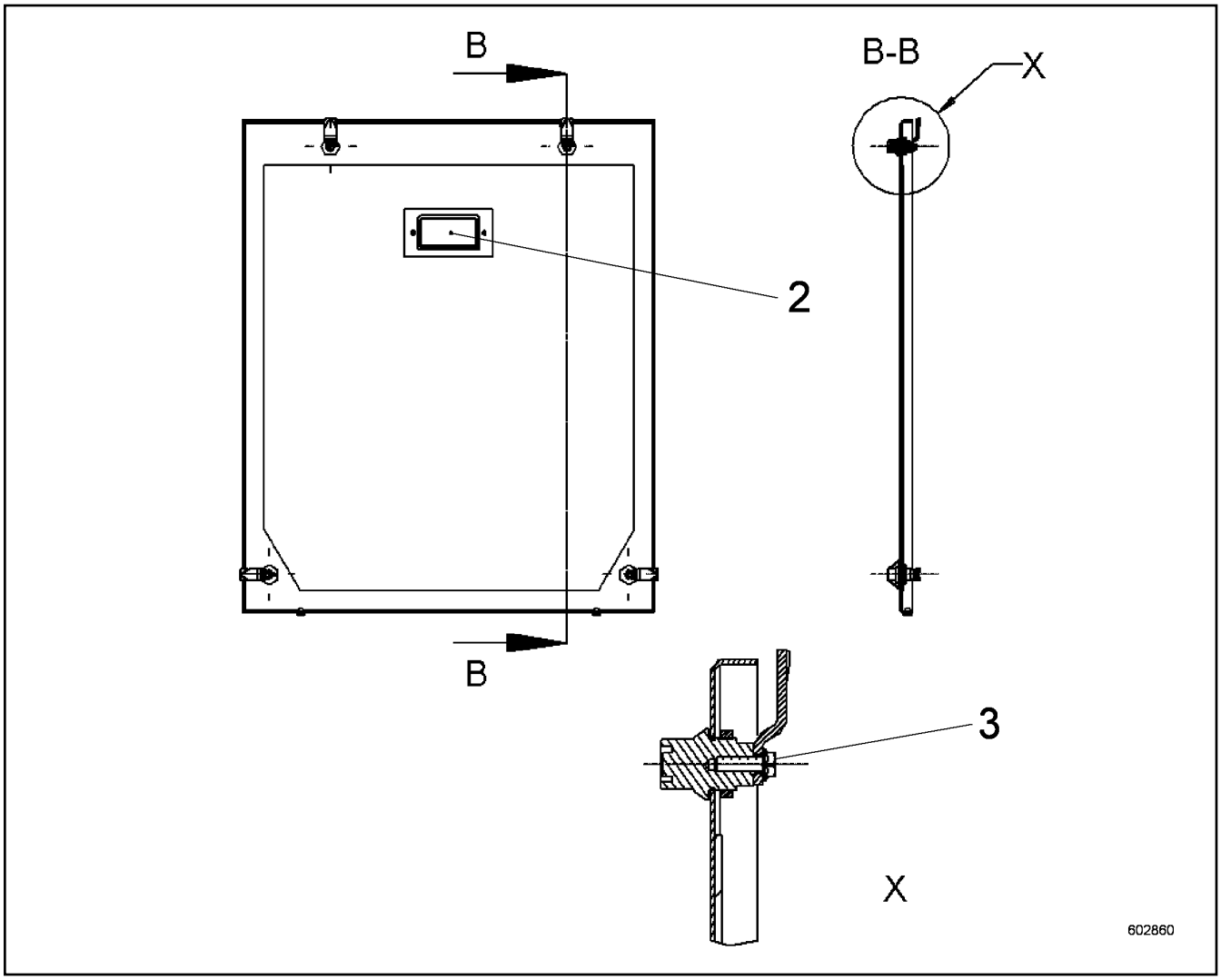

Pos.	Item	Quantity	Description	Bezeichnung	Serie	K
2	592289614	1	GRIP SHELL	GRIFFSCHALE		
3	592289714	1	CYLINDER LOCK	ZYL SCHLOSS		

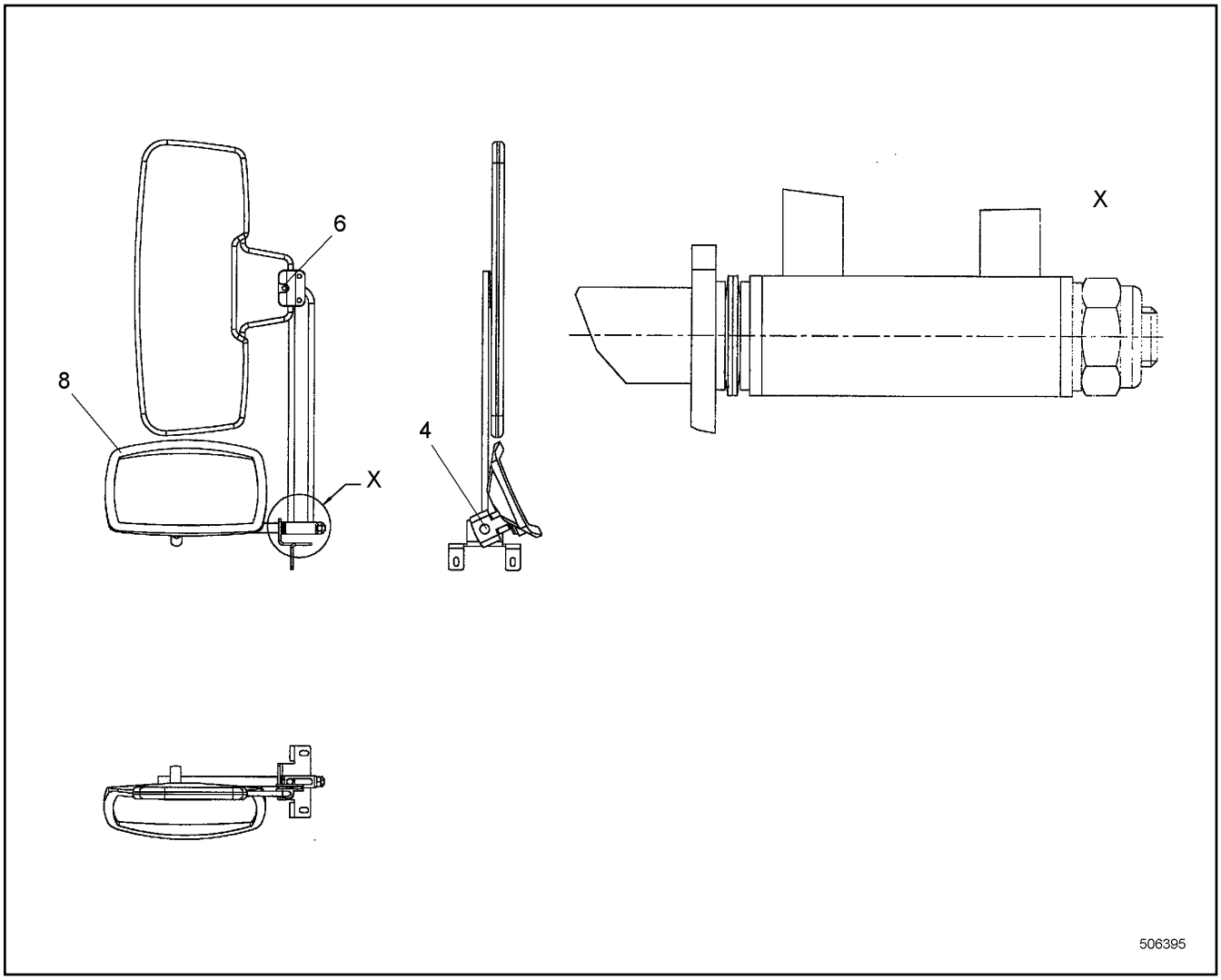

Pos.	Item	Quantity	Description	Bezeichnung	Serie	K
4	592290614	1	COLLER BUSHING	BUNDBUCHSE		
6	592290714	1	SUN VISOR	SONNENBLENDE		
8	592290814	1	MIRROR	SPIEGEL		

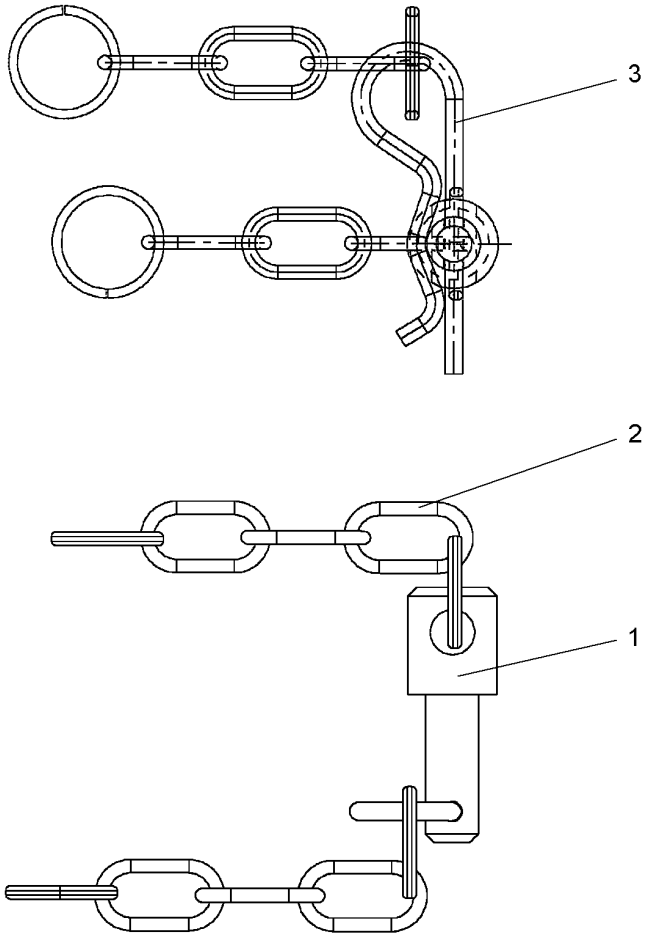

Pos.	Item	Quantity	Description	Bezeichnung	Serie	K
1	592291514	1	PIN	BOLZEN		
2	592291614	1	SECURING CHAIN	SICHERUNGSKETTE		
3	592291714	1	SPRING PLUG	FEDERSTECKER		

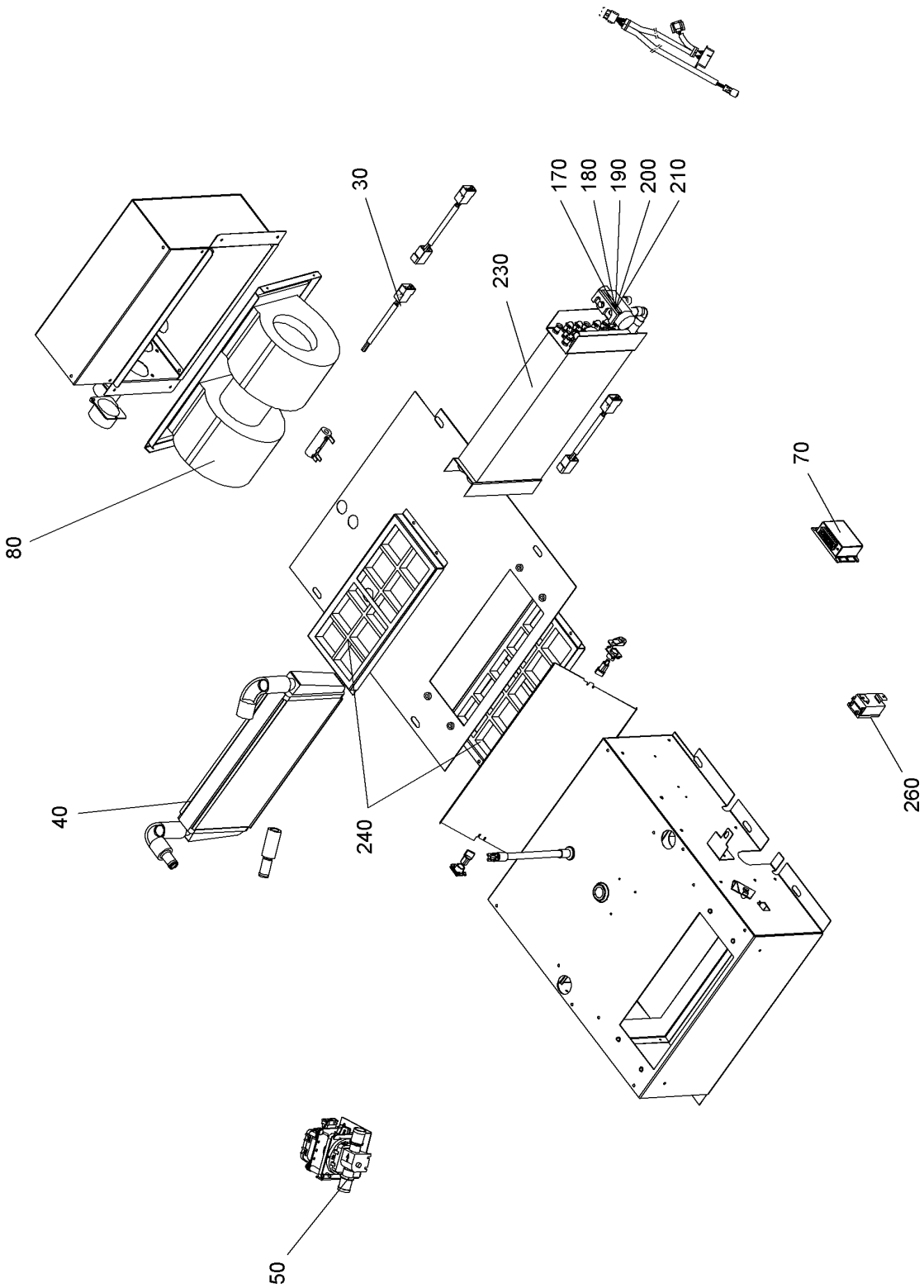
30
170
180
190
200
210
230
80
70
40
240
260
50
607896

Pos.	Item	Quantity	Description	Bezeichnung	Serie	K
30	10223208	1	CABLE LOOM	KABELSATZ		
40	10512662	1	HEAT EXCHANGER	WAERMETAUSCHER		
50	10584671	1	WATER VALVE ⇨ ❑ 379	WASSERVENTIL		
70	592293314	1	VALVE	VENTIL		
80	10223209	1	FAN	LUEFTER		
170	10223210	1	EXPANSION VALVE	EXPANSIONSVENTIL		
180	592293414	1	O-RING	O-RING		
190	592293514	1	O-RING	O-RING		
200	11259704	1	HOLDING PLATE	HALTEPLATTE		
210	11259705	1	HOLDING PLATE	HALTEPLATTE		
230	592293614	1	EVAPORATOR	VERDAMPFER		
240	592293714	2	FILTER	FILTER		
260	592293814	1	THERMOSTAT	THERMOSTAT		

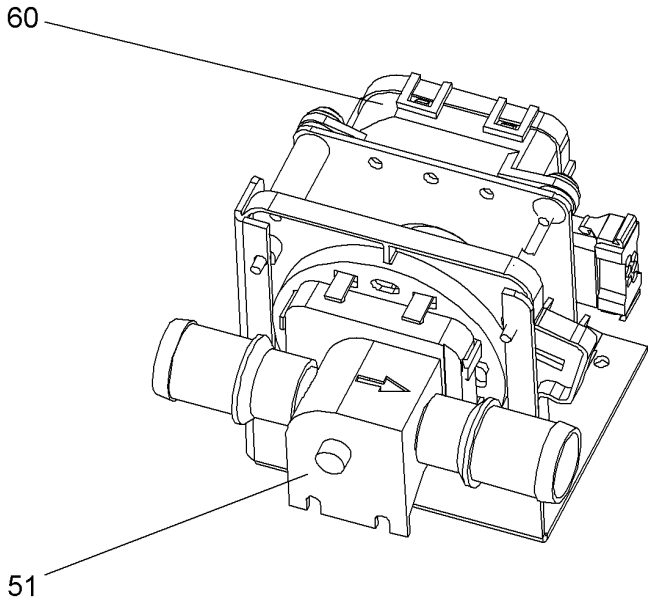

607897

Pos.	Item	Quantity	Description	Bezeichnung	Serie	K
51	592293114	1	WATER VALVE	WASSERVENTIL		
60	592293214	1	MOTOR	MOTOR		

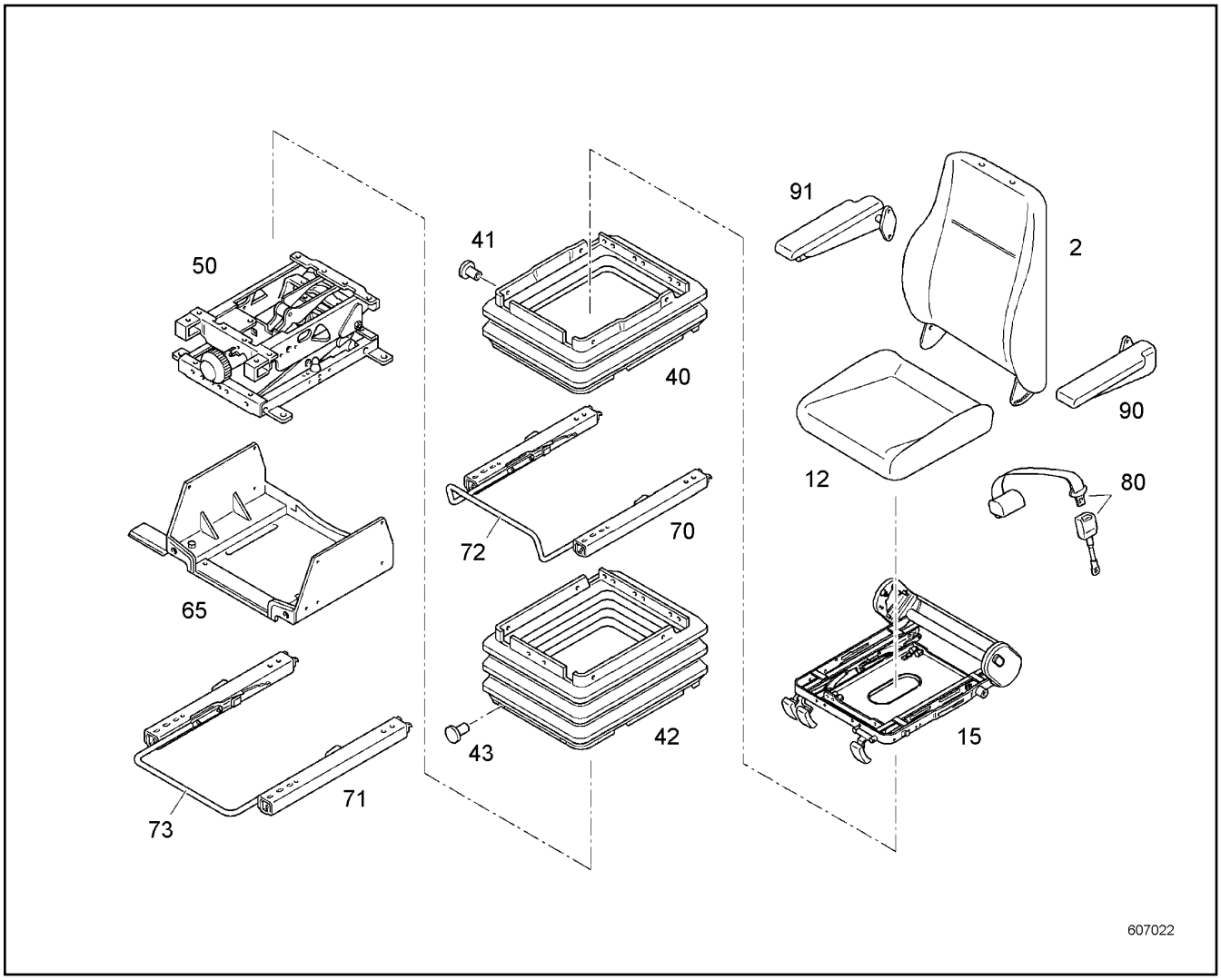

Pos.	Item	Quantity	Description	Bezeichnung	Serie	K
2	10289988	1	BACK PART	RUECKENTEIL		
12	7024981	1	SEAT PART CPL	SITZTEIL KPL		
15	7024996	1	SEAT FRAME ⇨ ❑ 381	SITZRAHMEN		
40	7025004	1	RUBBER BELLOWS	FALTENBALG		
41	10289973	1	FIXING PARTS	BEFESTIGUNGSTEILE		
42	7366620	1	RUBBER BELLOWS	FALTENBALG		
43	10289975	4	BUTTON	KNOPF		
50	10289993	1	VIBRATING SYSTEM ⇨ ❑ 382	SCHWINGSYSTEM		
65	10165637	1	SEAT VAT	SITZWANNE		
70	10289990	1	SLIDE SEAT GUIDE	SCHIEBESITZFUEHRUNG		
71	7024987	1	SLIDE SEAT GUIDE	SCHIEBESITZFUEHRUNG		
72	10289976	1	BRACKET	BUEGEL		
73	7370581	1	BRACKET	BUEGEL		
80	7371746	1	HIP BELT	BECKENGURT		
90	7024982	1	ARM REST LEFT	ARMLEHNE LINKS		
91	7024983	1	ARM REST RIGHT	ARMLEHNE RE		

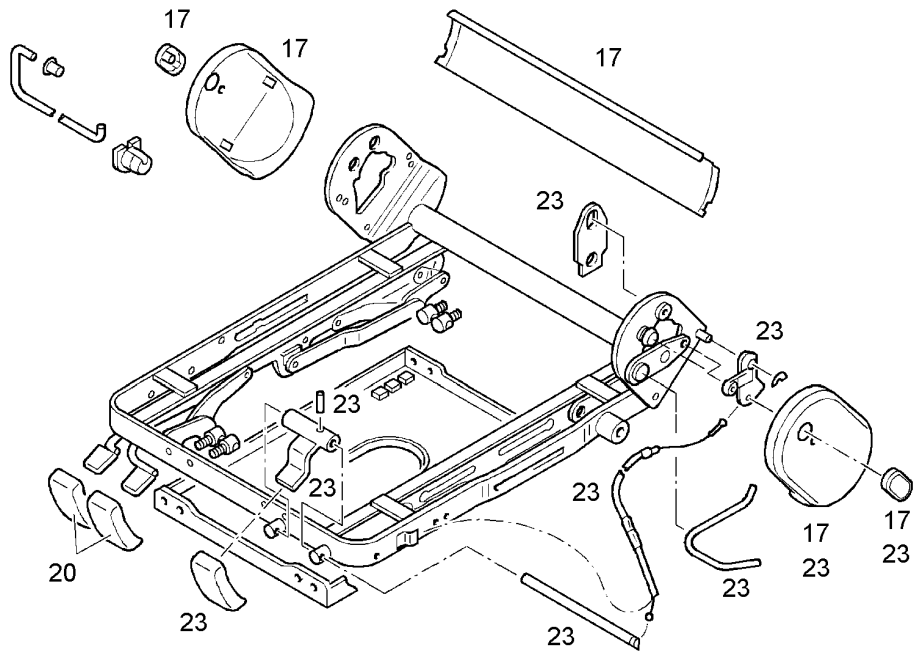

Pos.	Item	Quantity	Description	Bezeichnung	Serie	K
17	10036950	1	COVER LID	ABDECKKAPPE		
20	7025006	1	GRIP	GRIFF		
23	7025007	1	LATCHING DEVICE CPL	RASTVORRICHTUNG KPL		

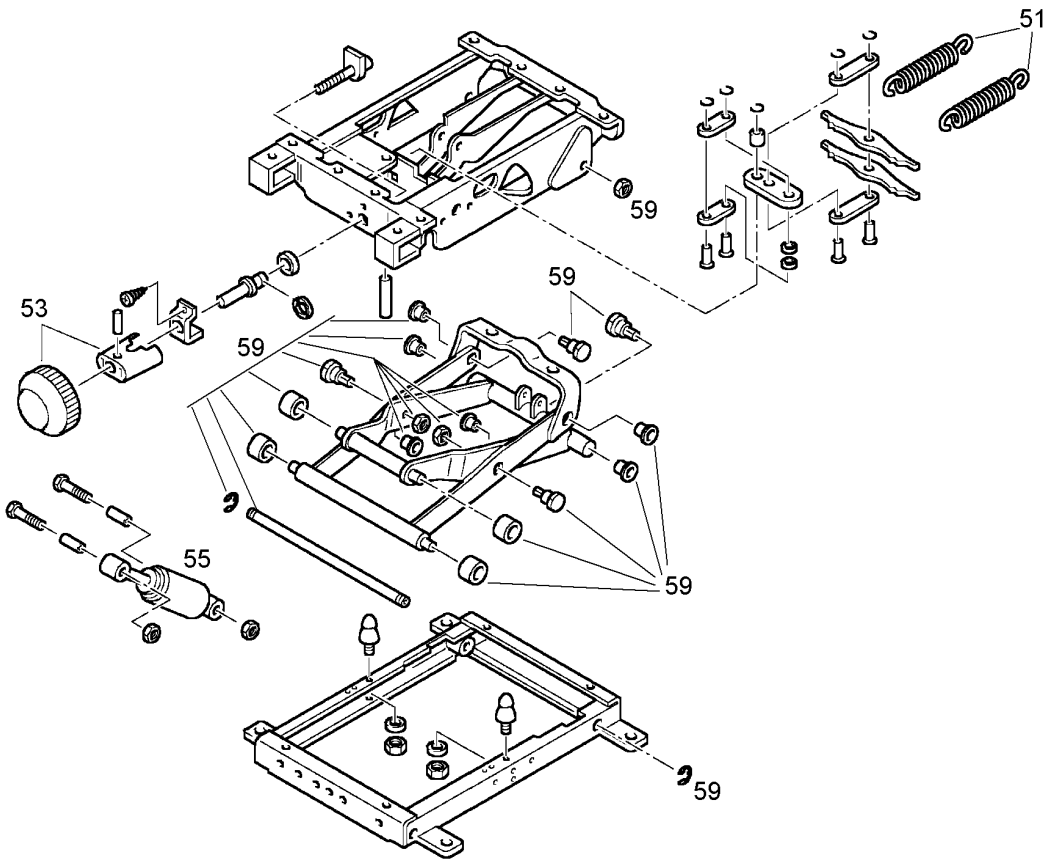

Pos.	Item	Quantity	Description	Bezeichnung	Serie	K
51	7617520	2	TENSION SPRING	ZUGFEDER		
53	5609144	1	HANDWHEEL	HANDRAD		
55	10289994	1	SHOCK ABSORBER	STOSSDAEMPFER		
59	7025009	1	BEARING	SCHERENLAGERUNG		

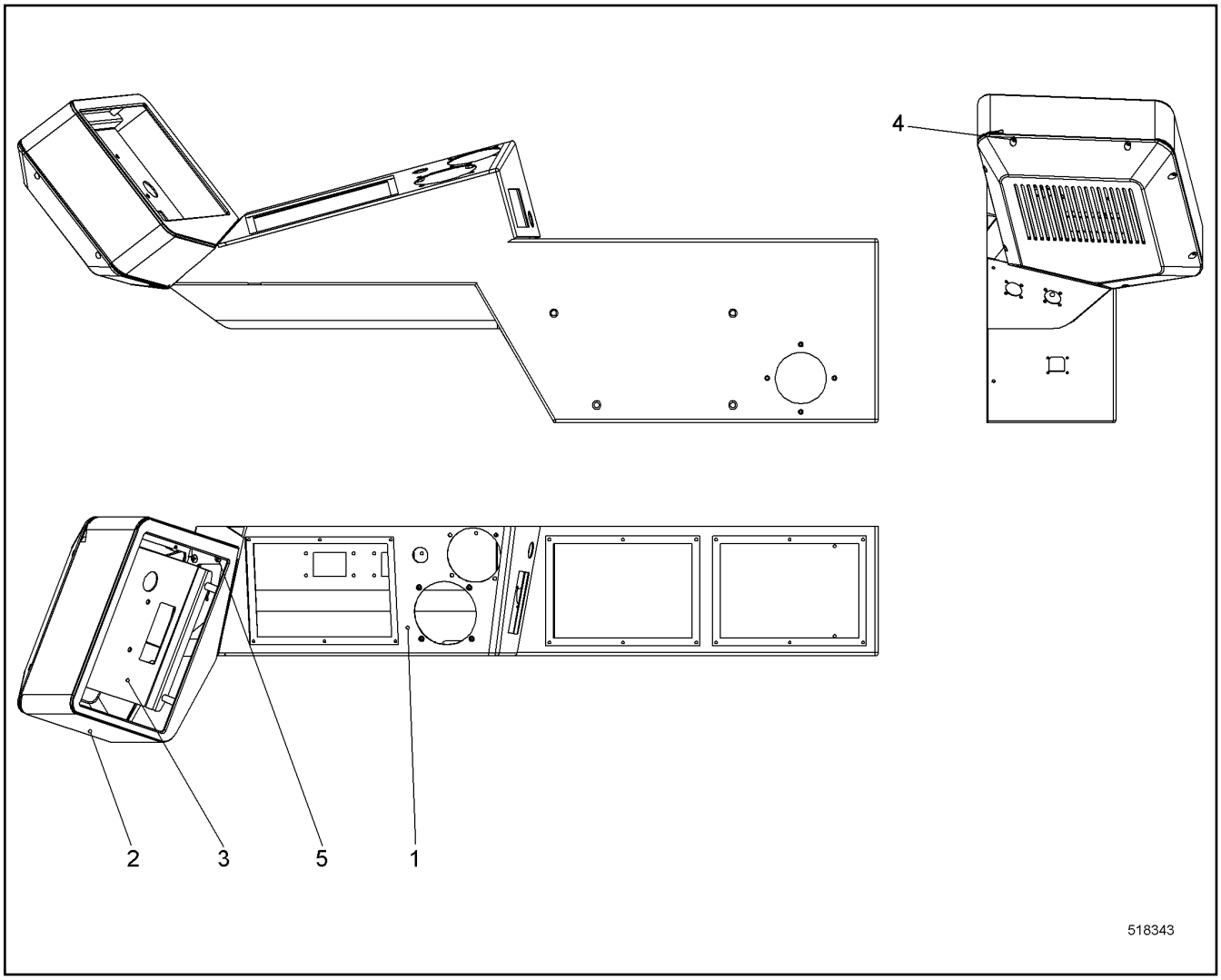

Pos.	Item	Quantity	Description	Bezeichnung	Serie	K
1	11262893	1	BRACKET REAR	KONSOLE HINTEN		
2	11262812	1	MONITOR SCREEN HOUSING	BILDSCHIRMGEHAEUSE		
3	11262894	1	HOLDER	HALTER		
4	10541540	11	PAN-HEAD SCREW ISO 7045 M4X6 A2-70	FLACHKOPFSCHRAUBE		
5	4002401	4	COUNTERSUNK SCREW ISO 7047 M6X12 4.8	SENKSCHRAUBE		

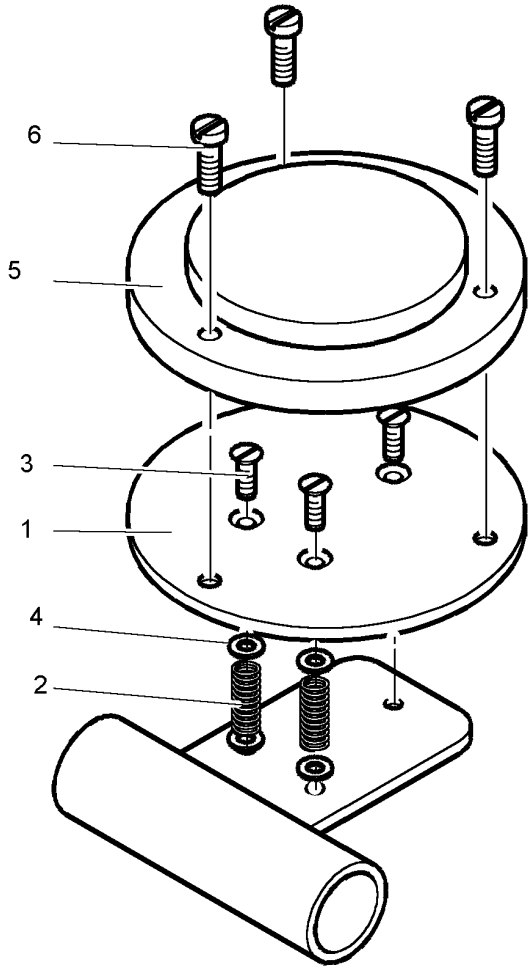

503383

Pos.	Item	Quantity	Description	Bezeichnung	Serie	K
2	411551214	9	HEX NUT ISO 4032 M4 A4-70	SECHSKANTMUTTER		
3	407041214	3	COUNTERSUNK SCREW ISO 2009 M4X25 4.8	SENKSCHRAUBE		
4	420000314	3	WASHER ISO 7089 4 A4	SCHEIBE		
5	714000808	1	SPIRIT LEVEL	WASSERWAAGE		
6	10541561	3	PAN-HEAD SCREW ISO 7045 M5X16 A2-70	FLACHKOPFSCHRAUBE		

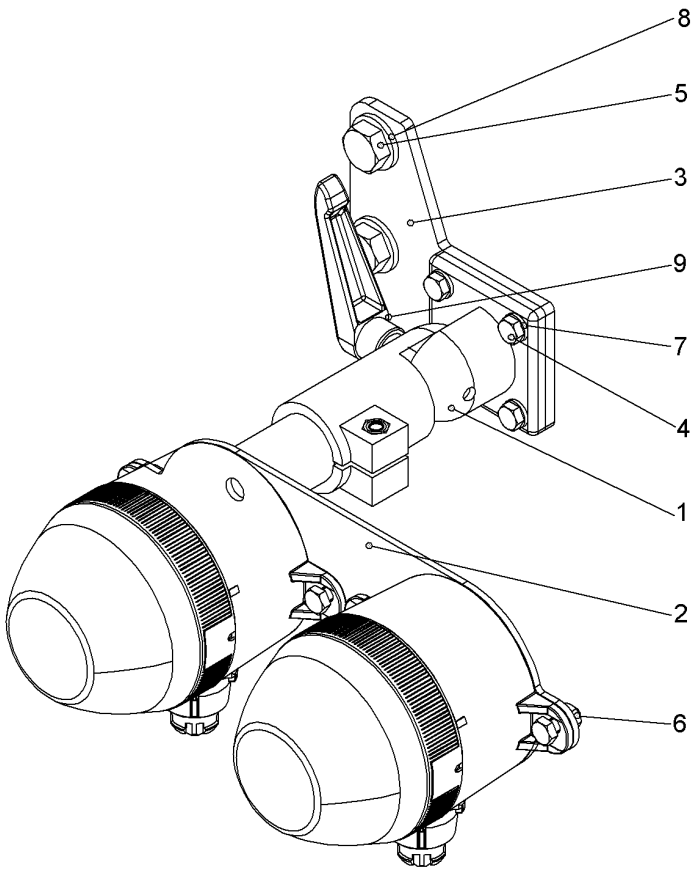

Pos.	Item	Quantity	Description	Bezeichnung	Serie	K
1	10537558	1	TERMINAL HOLDER B30	KLEMMHALTER		
2	10537562	1	LAMP HOLDER	LEUCHTENHALTER		
3	10537566	1	WP	WP		
4	406501714	8	HEX SCREW ISO 4017 M6X16 A4-70	SECHSKANTSCHRAUBE		
5	406528014	2	HEX SCREW ISO 4017 M12X16 A4-70	SECHSKANTSCHRAUBE		
6	411517114	4	HEX NUT ISO 4032 M6 A4-70	SECHSKANTMUTTER		
7	420000414	8	WASHER ISO 7089 6 A4	SCHEIBE		
8	420001514	2	WASHER ISO 7089 12 A4	SCHEIBE		
9	10555411	1	CLAMPING LEVER	KLEMMHEBEL		

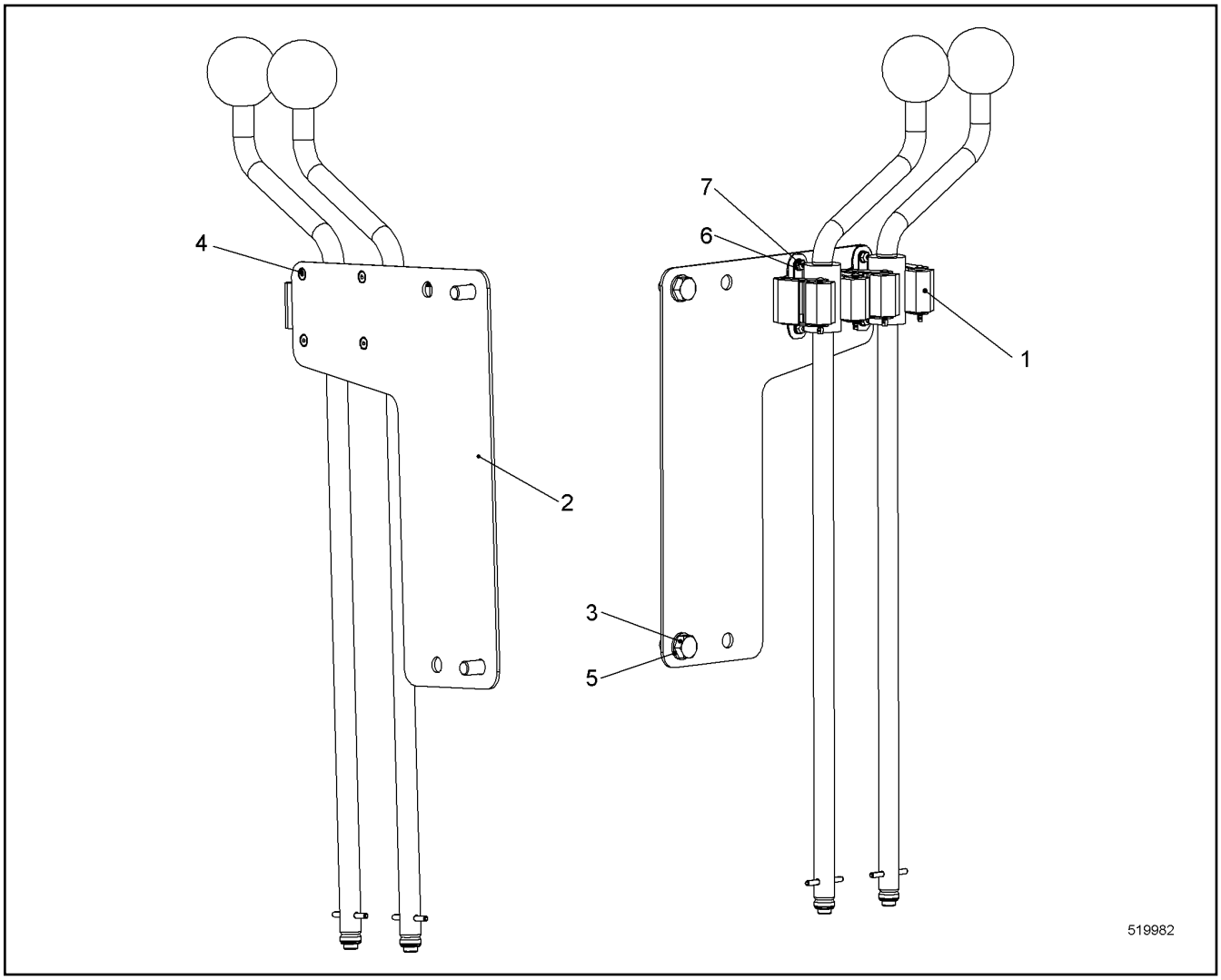

Pos.	Item	Quantity	Description	Bezeichnung	Serie	K
1	10445629	2	EQUIPMENT MOUNTING	GERAETEHALTER		
2	11309628	1	WP	WP		
3	406501514	2	HEX SCREW ISO 4017 M8X16 A4-70	SECHSKANTSCHRAUBE		
4	407071114	4	COUNTERSUNK SCREW DIN 7991 M3X8 A4-7	SENKSCHRAUBE		
5	420001014	2	WASHER ISO 7089 8 A4	SCHEIBE		
6	485546414	4	WASHER ISO 7089 3 A4	SCHEIBE		
7	485546514	4	HEX NUT ISO 4032 M3 A4-70	SECHSKANTMUTTER		

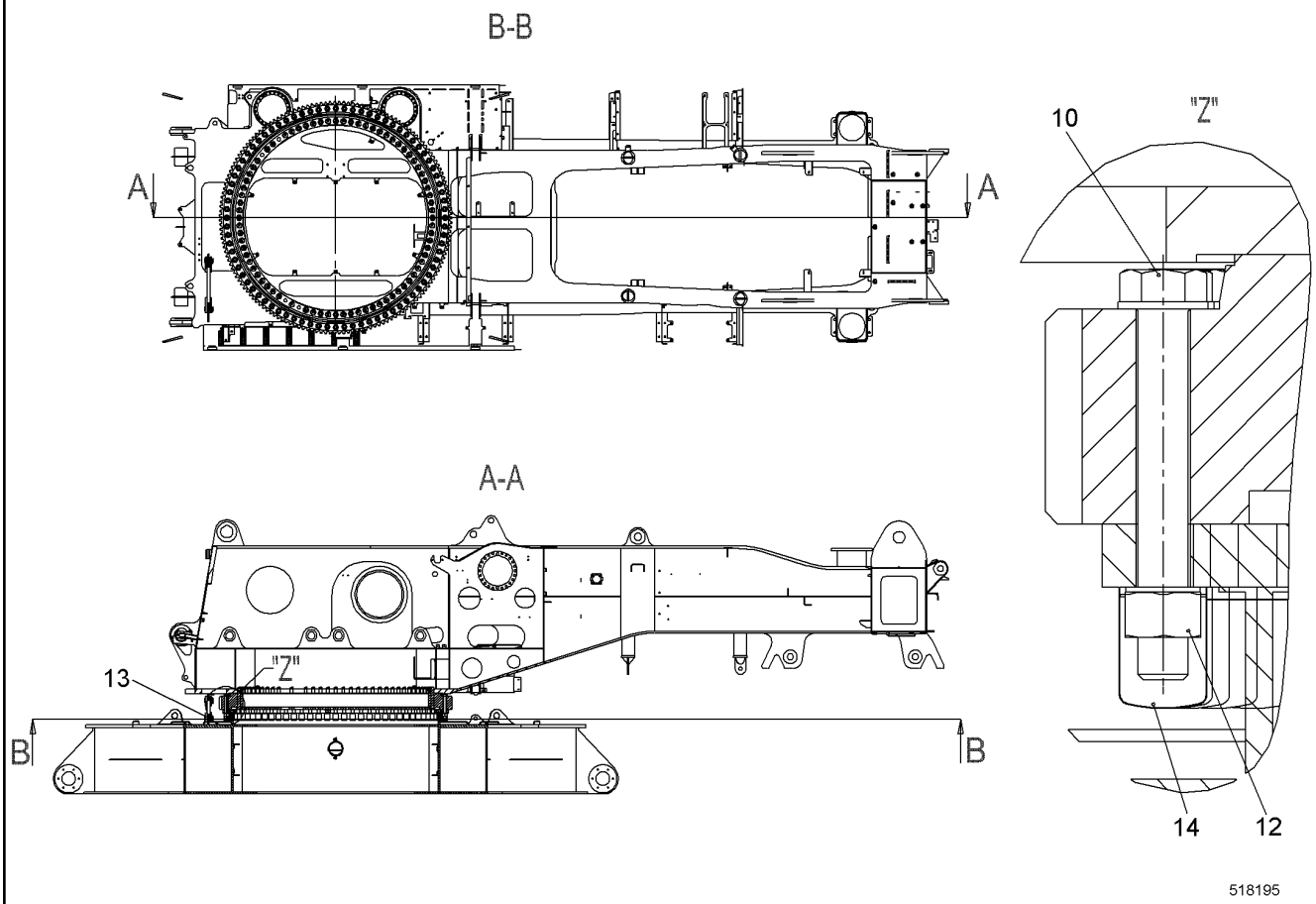

Pos.	Item	Quantity	Description	Bezeichnung	Serie	K
10	10512966	80	FLANGED BOLT M33X245 10.9	BUNDSCHRAUBE		
12	412705014	80	NUT LWN 8-60-106 M33 10	MUTTER		
13	991804114	1	LASHING SUPERSTRUCTURE ⇨ ❑ 388	VERZURRUNG OW		
14	11266978	80	PROTECTING CAP	SCHUTZKAPPE		

LR1280 / LR1300

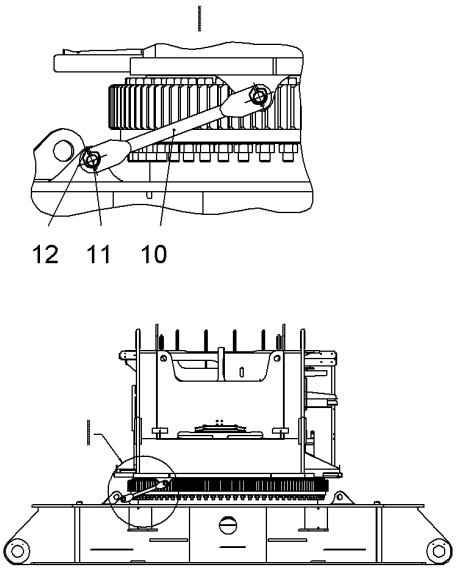

LR1300 / LR1300W

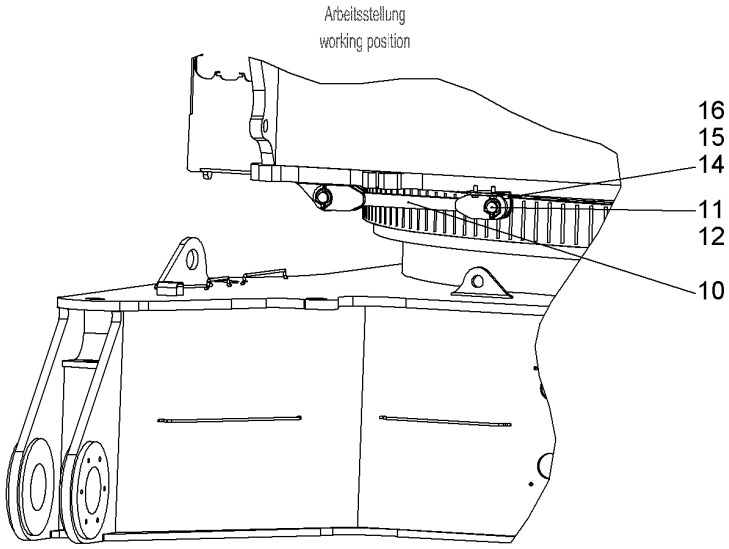

519291

Pos.	Item	Quantity	Description	Bezeichnung	Serie	K
10	953580303	1	BUTT STRAP	LASCHE		
11	956047514	2	PIN 50X95 LHRD750-30;10019758	BOLZEN		
12	10098106	2	SAFETY PLUG W HINGE-LID 10X55	SICHERHEITSKLAPPSTECKER		
14	10540512	2	WASHER ISO 7093-1 12 A4	SCHEIBE		
15	406517314	2	HEX SCREW ISO 4017 M12X30 A4-70	SECHSKANTSCHRAUBE		

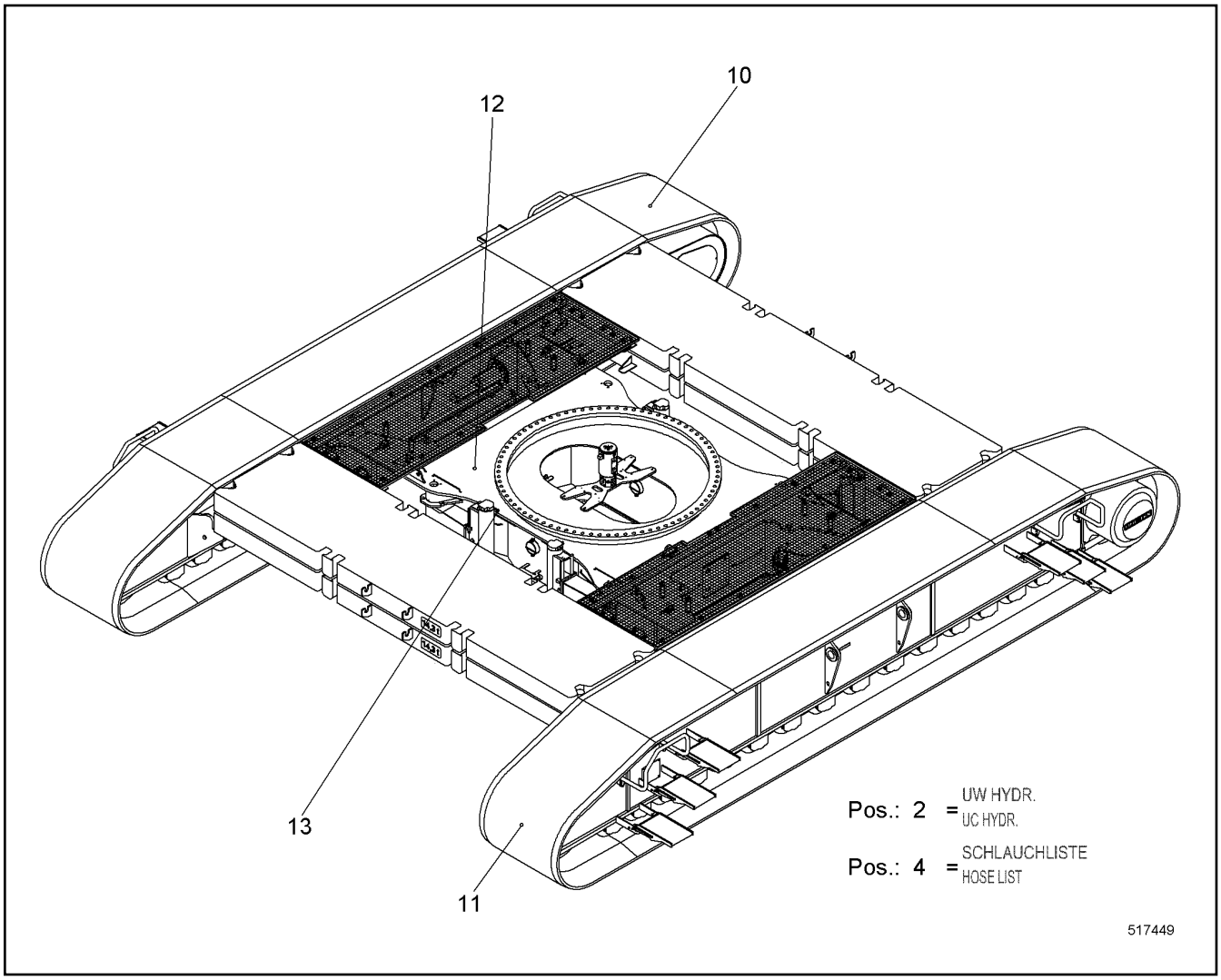

Pos.	Item	Quantity	Description	Bezeichnung	Serie	K
2	11259815	1	UC HYDR ⇨ ❑ 390	UW HYDR		
4	11235480	1	HOSE LIST ⇨ ❑ 405	SCHLAUCHLISTE		
10	10558760	1	CRAWLER CARRIER RIGHT CPL ⇨ ❑ 407	RAUPENTRAEGER RE KPL		
11	10558761	1	CRAWLER CARRIER LEFT CPL ⇨ ❑ 416	RAUPENTRAEGER LI KPL		
12	11235481	1	CENTRE PART CPL ⇨ ❑ 418	MITTELTEIL KPL		
13	289059414	1	WP	WP		

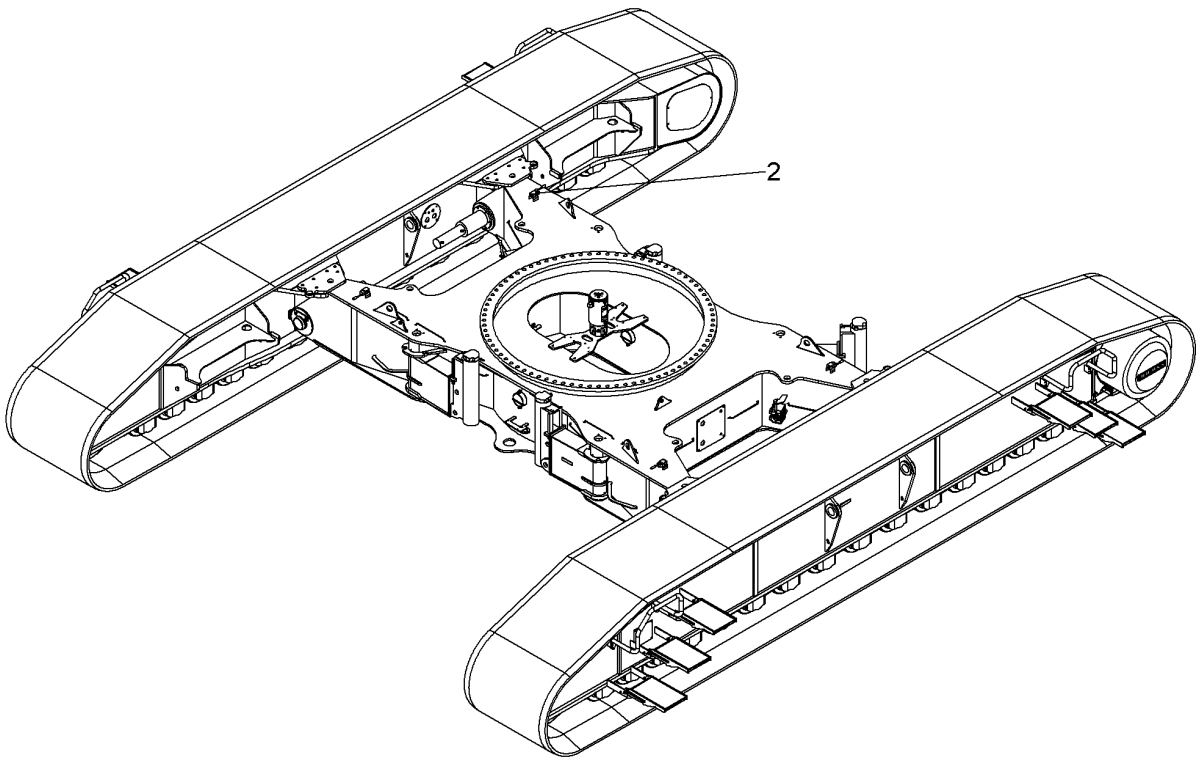

Pos.	Item	Quantity	Description	Bezeichnung	Serie	K
2	11259031	1	TUBING HYDR ⇨ ❑ 391	VERROHRUNG HYDR		

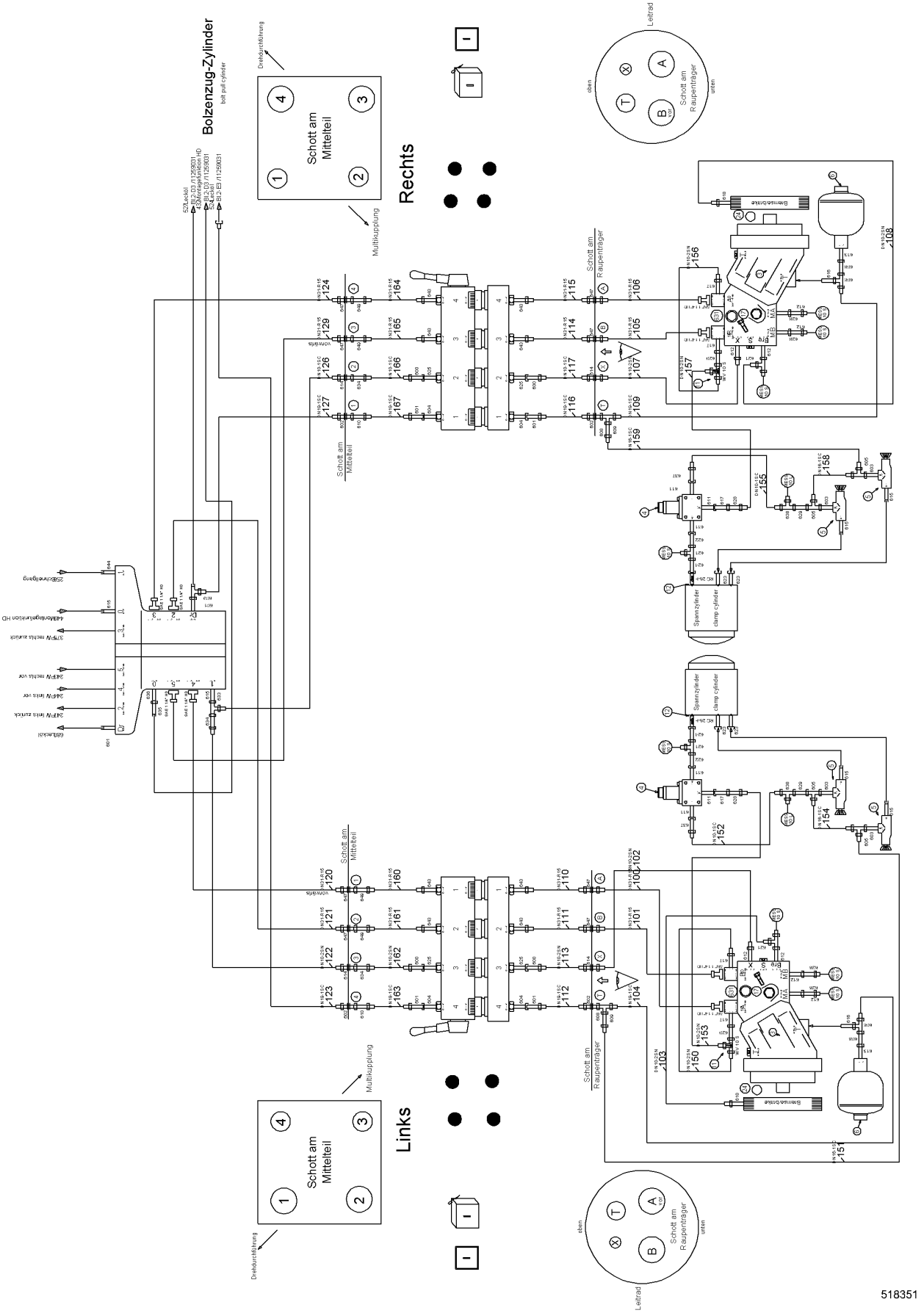
Rechts
Links
Schott am Mittelteil
Schott am Raupenträger
Multikupplung
Drehdurchführung
Leitrad
Bolzenzug-Zylinder
bolt pull-cylinder
Spannzylinder
clamp cylinder
518351

Pos.	Item	Quantity	Description	Bezeichnung	Serie	K
2	10550970	1	ROTARY FEED THROUGH HYDR ⇨ ❑ 395	DREHDURCHFUEHRUNG HYDR		
3	512405914	2	VARIABLE DISPLACEMENT MOTOR ⇨ ❑ 397	V.MOTOR		
4	510438514	2	PRESSURE REDUCTION VALVE	DRUCKREDUZIERVENTIL		
5	592323114	4	PRESSURE LIMITING VALVE	DRUCKBEGRENZUNGSVENTIL		
6	592274714	2	DIAPHRAGM ACCUMULATOR	MEMBRANSPEICHER		
7	10445102	1	QUICK RELEASE FITTING ⇨ ❑ 400	SCHNELLVERSCHLUSSKUPPLUN		
8	10445101	1	QUICK RELEASE FITTING ⇨ ❑ 401	SCHNELLVERSCHLUSSKUPPLUN		
9	10551548	2	QUICK RELEASE FITTING ⇨ ❑ 402	SCHNELLVERSCHLUSSKUPPLUN		
10	510710614	4	INTERMEDIATE FLANGE SAE	ZWISCHENFLANSCH SAE		
11	511491914	2	SHUTTLE VALVE	WECHSELVENTIL		
12	10099055	2	NON-RETURN VALVE	RUECKSCHLAGVENTIL		
13	513314114	4	DOUBLE-ACTING CYL ⇨ ❑ 403	DOPPELWIRKZYL		
14	510403414	4	DIRECTIONAL CTRL. VALVE	WEGESCHIEBER		
16	511458114	4	NON-RETURN VALVE	RUECKSCHLAGVENTIL		
17	10539305	8	HEX SCREW ISO 4017 M14X70 10.9	SECHSKANTSCHRAUBE		
18	10544050	16	SOCKET HEAD SCREW ISO 4762 M14X75 10.9	ZYLINDERSCHRAUBE		
19	10539300	16	HEX SCREW ISO 4017 M14X45 10.9	SECHSKANTSCHRAUBE		
20	10445127	2	ENCLOSURE CPL	GEHAEUSE KPL		
21	10551191	2	LID CPL ⇨ ❑ 404	DECKEL KPL		
22	247049002	1	FLANGE JOINT	VERSCHRAUBUNG		
23	477700214	1	FLANGE JOINT	VERSCHRAUBUNG		
24	726461014	2	O-RING	O-RING		
204	510694514	8	GAUGE CONNECTION	MESSSTUTZEN		
205	510629008	2	GAUGE CONNECTION	MESSSTUTZEN		
600	471032708	24	FLANGE JOINT	VERSCHRAUBUNG		
601	247009902	6	FLANGE JOINT	VERSCHRAUBUNG		
602	247027302	4	FLANGE JOINT	VERSCHRAUBUNG		
603	247009702	4	FLANGE JOINT	VERSCHRAUBUNG		
604	475501414	4	FLANGE JOINT	VERSCHRAUBUNG		
605	247128502	4	FLANGE JOINT	VERSCHRAUBUNG		
606	482430614	2	FLANGE JOINT	VERSCHRAUBUNG		
608	247041102	4	FLANGE JOINT	VERSCHRAUBUNG		
609	247138602	4	FLANGE JOINT	VERSCHRAUBUNG		

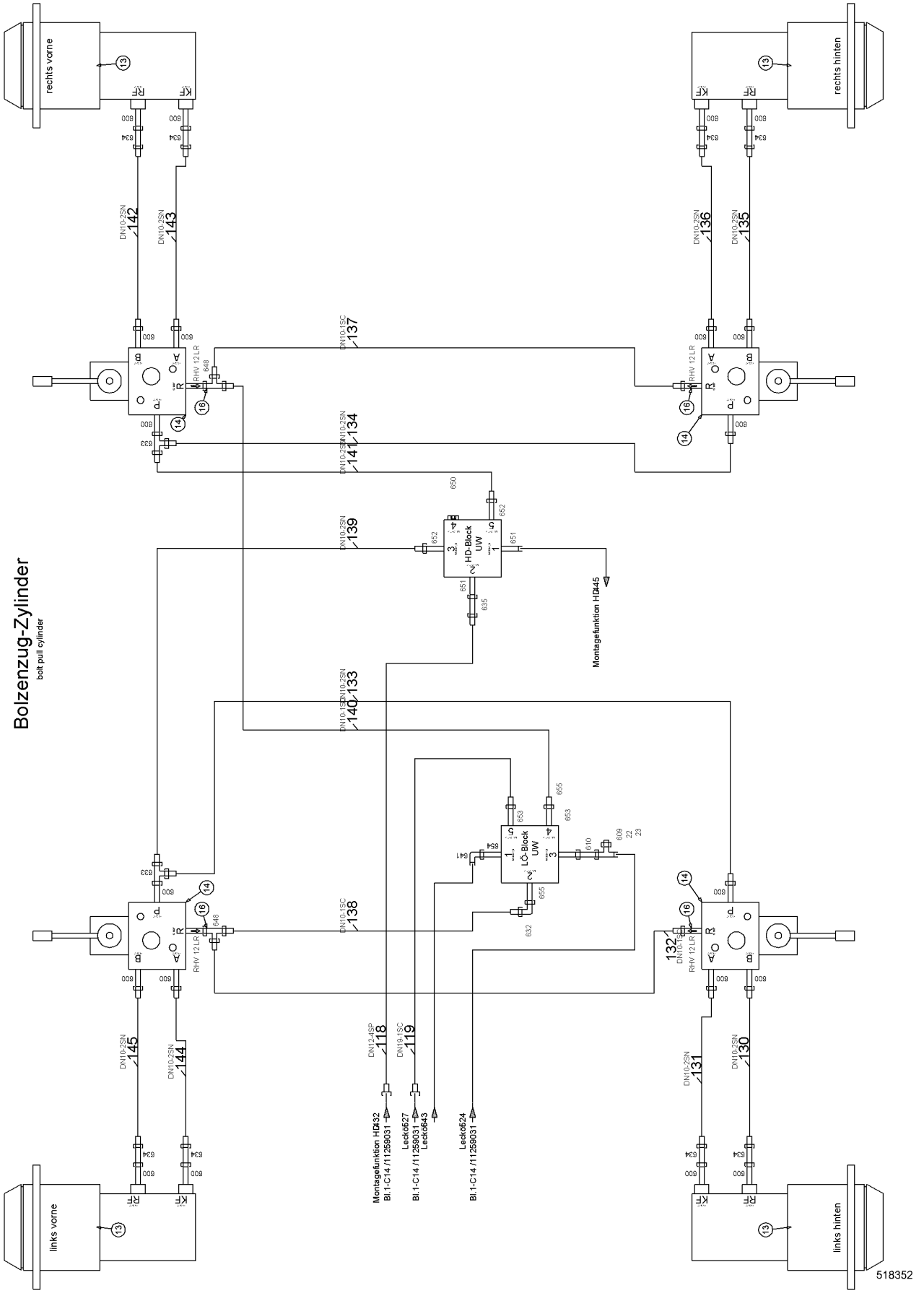

8.7.2015 518352 LIEBHERR	**138281_ETK_001** **TUBING HYDR** **VERROHRUNG HYDR**	393 (3/4) **11 25 903 1**

Pos.	Item	Quantity	Description	Bezeichnung	Serie	K
610	247126202	3	FLANGE JOINT	VERSCHRAUBUNG		
611	247042402	6	FLANGE JOINT	VERSCHRAUBUNG		
612	471008214	8	FLANGE JOINT	VERSCHRAUBUNG		
613	247011602	2	FLANGE JOINT	VERSCHRAUBUNG		
614	474002414	4	FLANGE JOINT	VERSCHRAUBUNG		
615	471032608	6	FLANGE JOINT	VERSCHRAUBUNG		
616	471031308	2	FLANGE JOINT	VERSCHRAUBUNG		
617	471004514	6	FLANGE JOINT	VERSCHRAUBUNG		
618	471004614	2	FLANGE JOINT	VERSCHRAUBUNG		
620	471100614	2	FLANGE JOINT	VERSCHRAUBUNG		
621	7367776	4	FLANGE JOINT	VERSCHRAUBUNG		
622	471032808	2	FLANGE JOINT	VERSCHRAUBUNG		
623	481933014	4	FLANGE JOINT	VERSCHRAUBUNG		
624	481930414	2	FLANGE JOINT	VERSCHRAUBUNG		
625	475502514	4	FLANGE JOINT	VERSCHRAUBUNG		
628	7617268	6	FLANGE JOINT	VERSCHRAUBUNG		
629	485436414	2	FLANGE JOINT	VERSCHRAUBUNG		
631	10472425	10	PLAIN COMPRESSION RING	RECHTECKRING		
632	247117702	1	FLANGE JOINT	VERSCHRAUBUNG		
633	7617461	3	FLANGE JOINT	VERSCHRAUBUNG		
634	7617354	11	FLANGE JOINT	VERSCHRAUBUNG		
635	7617460	2	FLANGE JOINT	VERSCHRAUBUNG		
636	471033214	1	FLANGE JOINT	VERSCHRAUBUNG		
637	471030608	2	FLANGE JOINT	VERSCHRAUBUNG		
638	247242302	2	FLANGE JOINT	VERSCHRAUBUNG		
641	247108302	1	FLANGE JOINT	VERSCHRAUBUNG		
643	7410455	8	FLANGE JOINT	VERSCHRAUBUNG		
644	247009202	1	FLANGE JOINT	VERSCHRAUBUNG		
646	510586614	16	FLANGE HALF	FLANSCHHAELFTE		
647	474033014	8	FLANGE JOINT	VERSCHRAUBUNG		
648	247128602	2	FLANGE JOINT	VERSCHRAUBUNG		
649	482531814	4	FLANGE JOINT	VERSCHRAUBUNG		
650	477704514	1	FLANGE JOINT	VERSCHRAUBUNG		
651	471033014	2	FLANGE JOINT	VERSCHRAUBUNG		
652	471036014	2	FLANGE JOINT	VERSCHRAUBUNG		
653	7365616	2	FLANGE JOINT	VERSCHRAUBUNG		
654	471031108	1	FLANGE JOINT	VERSCHRAUBUNG		
655	471039908	2	FLANGE JOINT	VERSCHRAUBUNG		

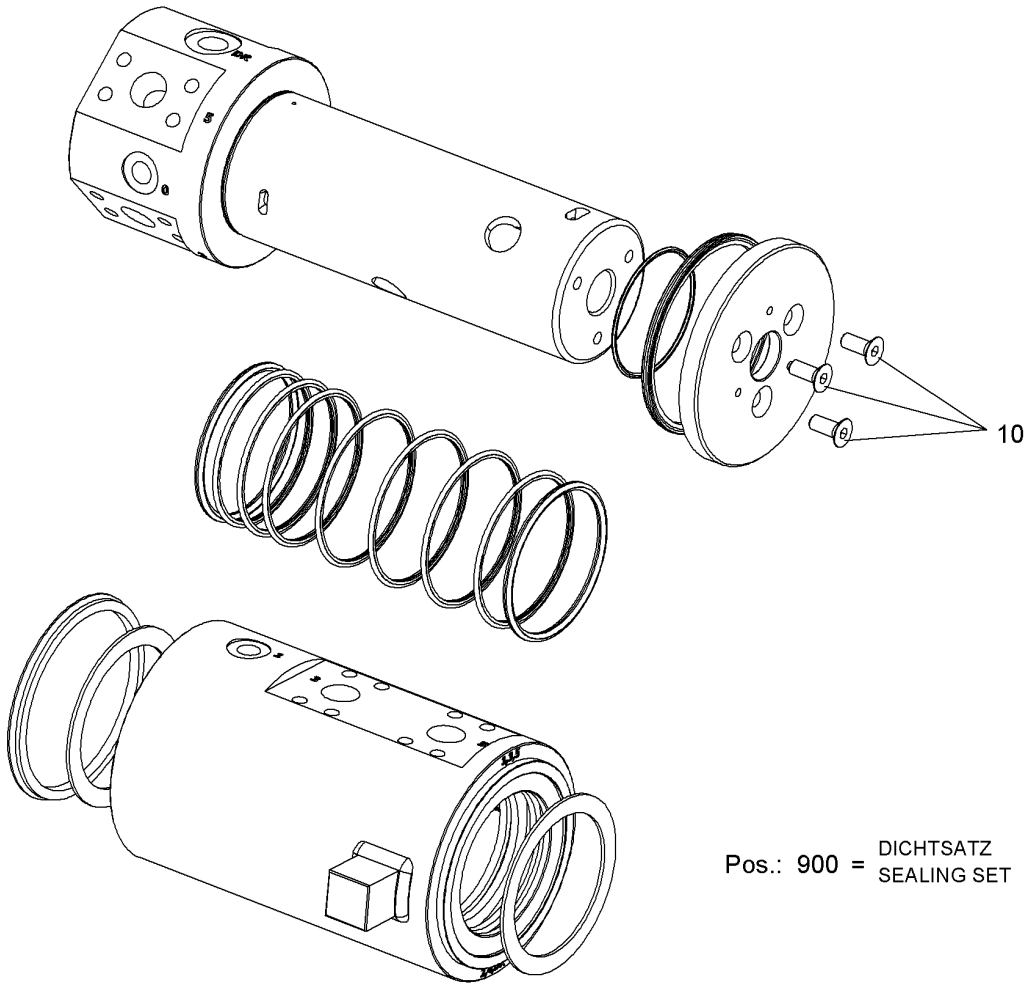

Pos.	Item	Quantity	Description	Bezeichnung	Serie	K
10	11249772	3	SCREW M12X30	SCHRAUBE		
900	11896178	1	SEALING SET ⇨ ❑ 396	DS		

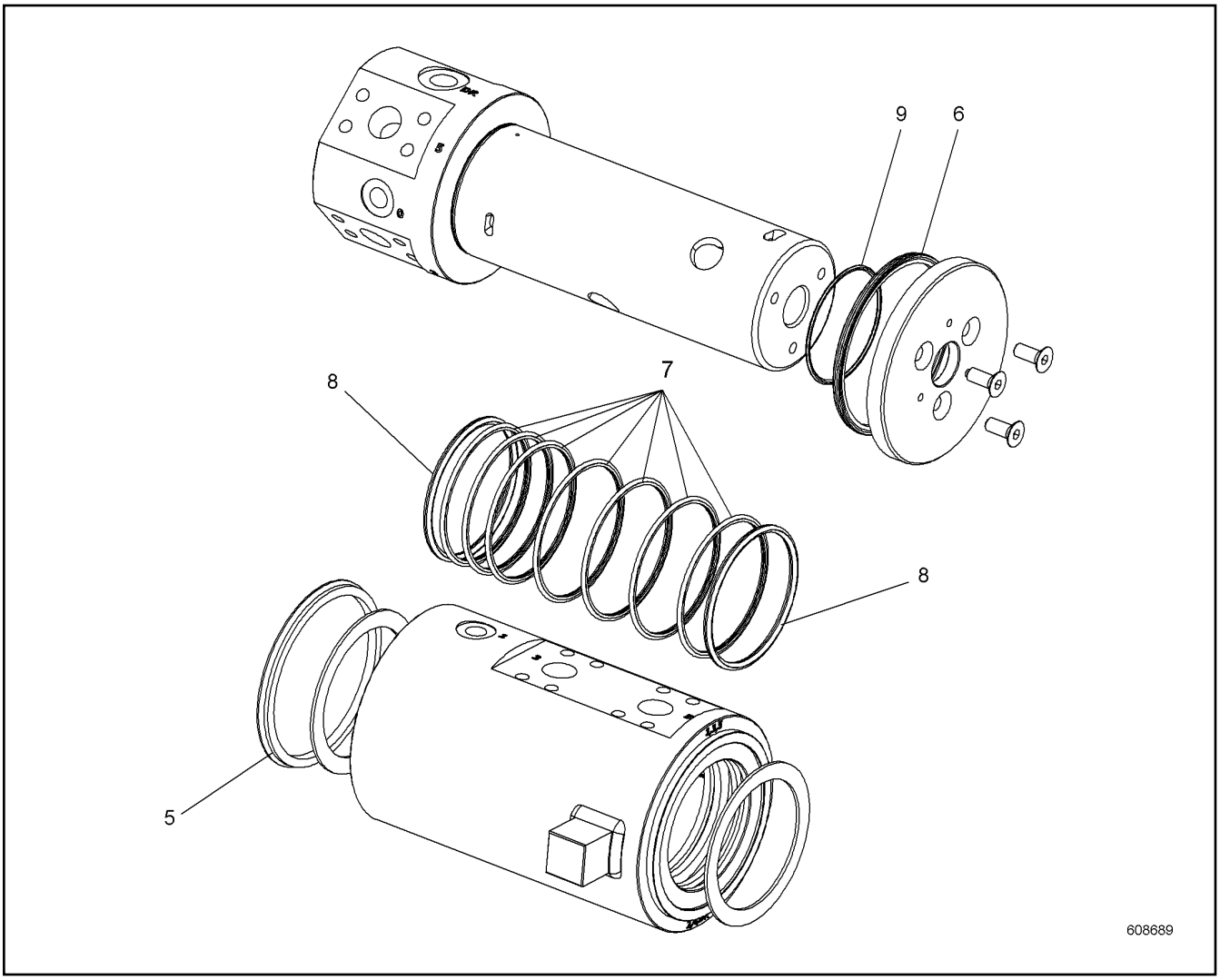

Pos.	Item	Quantity	Description	Bezeichnung	Serie	K
5	11251437	1	V-RING	V-RING		
6	11251434	1	SEAL	DICHTUNG		
7	11253456	7	LIFETIME SEAL	GLEITDICHTRING		
8	11251423	2	O-RING	O-RING		
9	11249804	1	O-RING	O-RING		

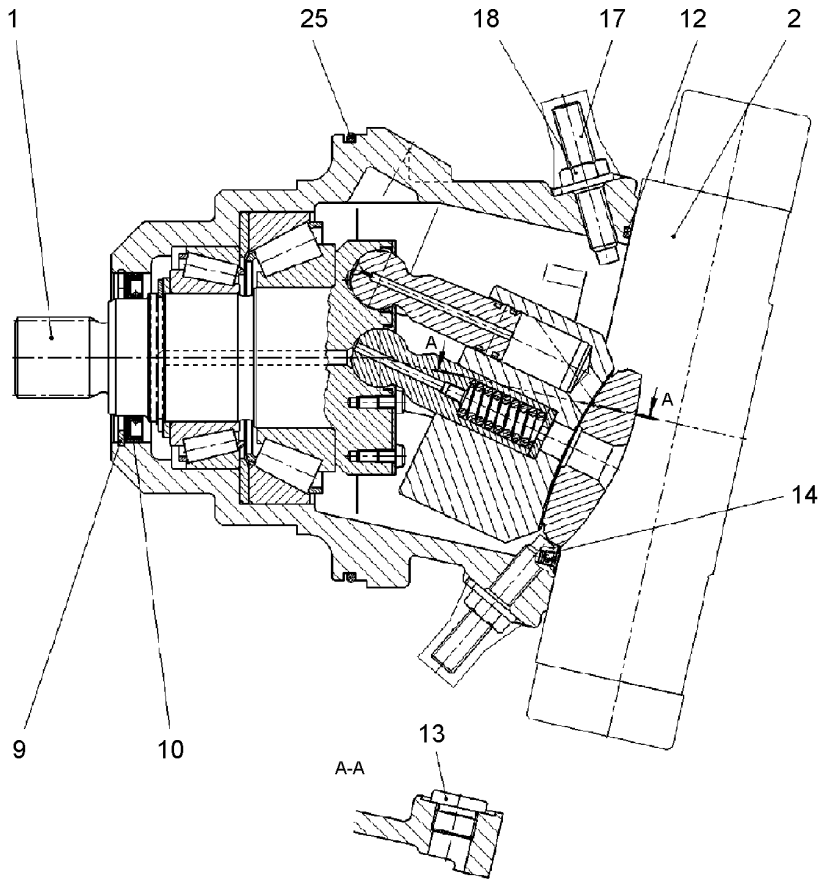

Pos.	Item	Quantity	Description	Bezeichnung	Serie	K
1	10503513	1	DRIVING GEAR	TRIEBWERK		
2	11224738	1	ADJUSTMENT ⇨ ❑ 398	VERSTELLUNG		
9	10598700	1	LOCKING RING	SICHERUNGSRING		
10	790563914	1	SHAFT SEAL	WELLENDICHTRING		
12	726459414	1	O-RING	O-RING		
13	10503477	1	SCREW PLUG M26X1.5	VERSCHLUSSSCHRAUBE		
14	7022118	1	O-RING	O-RING		
17	7373597	2	GRUB SCREW	GEWINDESTIFT		
18	7005072	2	SEALING NUT M12X1.75	DICHTMUTTER		
25	11224740	1	O-RING	O-RING		

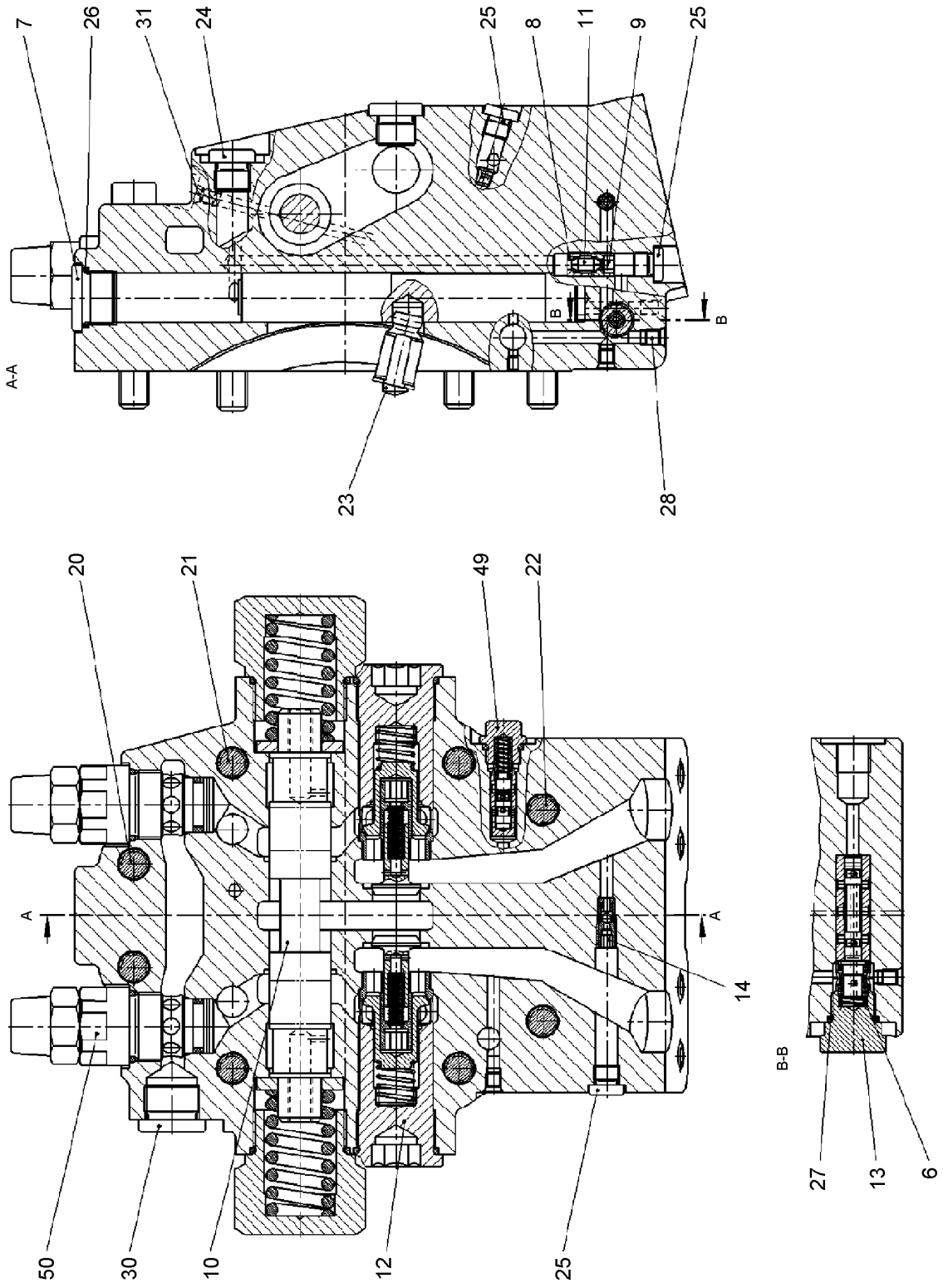
7
26
31
24
25
8
11
9
25
A-A
B
B
23
28
20
21
49
22
A
A
14
50
30
10
12
25
B-B
27
13
6
604984

Pos.	Item	Quantity	Description	Bezeichnung	Serie	K
6	10115224	1	PRESSURE SPRING	DRUCKFEDER		
7	11224761	1	SCREW PLUG	VERSCHLUSSSCHRAUBE		
8	7615603	1	THROTTLE SCREW	DROSSELSCHRAUBE		
9	7615604	1	THROTTLE SCREW	DROSSELSCHRAUBE		
10	512411914	1	BRAKE VALVE	BREMSVENTIL		
11	10115230	1	PIN	STIFT		
12	11224762	2	VALVE	VENTIL		
13	10115232	1	SCREW PLUG	VERSCHLUSSSCHRAUBE		
14	10446566	1	SHUTTLE VALVE	WECHSELVENTIL		
20	11220320	2	SOCKET HEAD SCREW	ZYLINDERSCHRAUBE		
21	11220320	2	SOCKET HEAD SCREW	ZYLINDERSCHRAUBE		
22	11224767	4	SOCKET HEAD SCREW	ZYLINDERSCHRAUBE		
23	10598777	2	PARALLEL PIN	ZYLINDERSTIFT		
24	7414500	3	SCREW PLUG	VERSCHLUSSSCHRAUBE		
25	10115237	4	SCREW PLUG M10X1	VERSCHLUSSSCHRAUBE		
26	7028151	1	O-RING	O-RING		
27	10115240	1	O-RING	O-RING		
28	10337055	5	DOUBLE PLUG	DOPPELABREISSSTOPFEN		
30	10519025	1	SCREW PLUG	VERSCHLUSSSCHRAUBE		
31	7012971	1	DOUBLE PLUG	DOPPELABREISSSTOPFEN		
49	10115241	1	PRESSURE CONTROL VALVE	DRUCKREGELVENTIL		
50	511655114	2	PRESSURE LIMITING VALVE	DRUCKBEGRENZUNGSVENTIL		

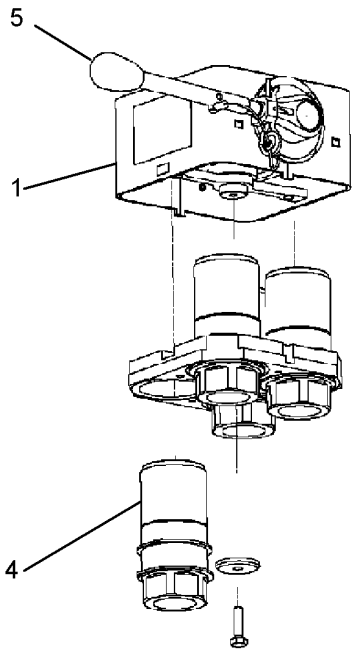

603334

Pos.	Item	Quantity	Description	Bezeichnung	Serie	K
1	10447744	1	HOUSING	GEHAEUSE		
4	10447748	4	SLEEVE	MUFFE		
5	10447749	1	LEVER	HEBEL		
6	11293193	1	HUB	NABE		
7	11293195	1	WASHER	SCHEIBE		
8	11293196	1	LOCKING RING DIN 471 14X1 FEDERSTAHL/	SICHERUNGSRING		
17	11292956	1	GUIDE	FUEHRUNG		

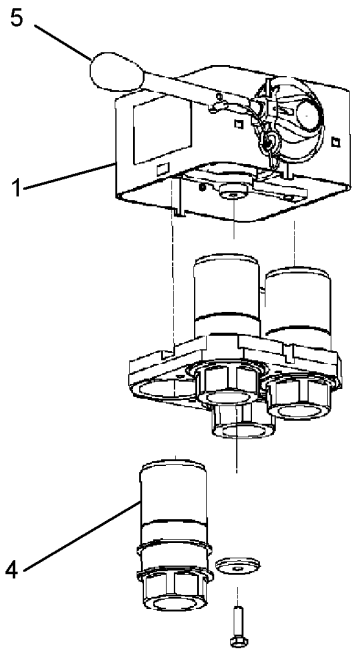

603333

Pos.	Item	Quantity	Description	Bezeichnung	Serie	K
1	10447743	1	HOUSING	GEHAEUSE		
4	10447748	4	SLEEVE	MUFFE		
5	10447749	1	LEVER	HEBEL		

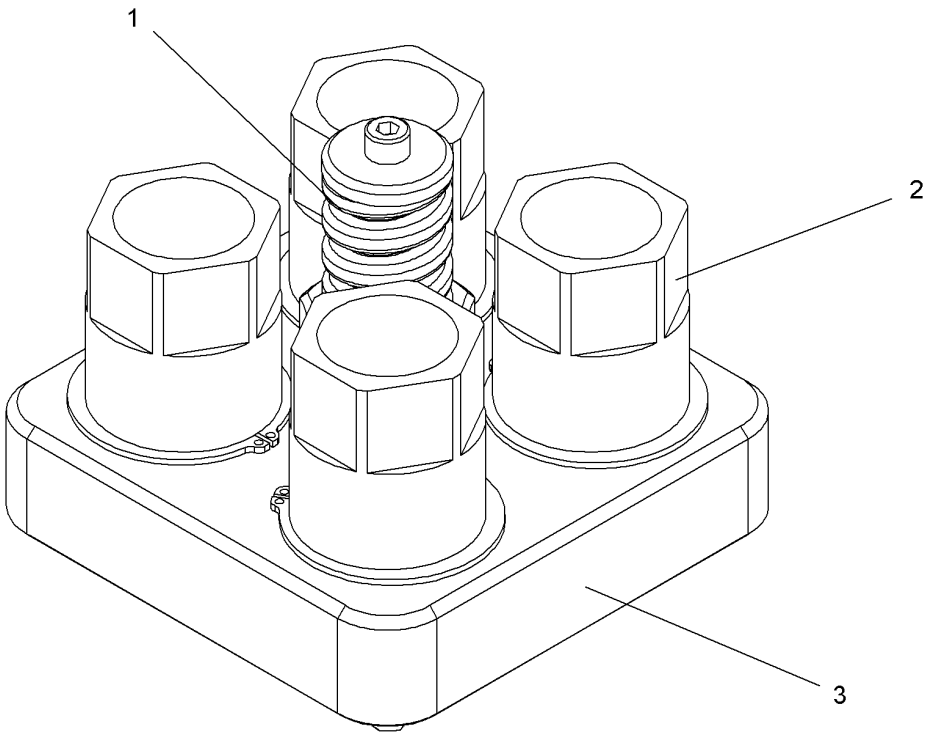

Pos.	Item	Quantity	Description	Bezeichnung	Serie	K
1	10572236	1	GUIDING BOLT	FUEHRUNGSBOLZEN		
2	10447747	4	PLUG	STECKER		
3	10572241	1	COVER	DECKEL		

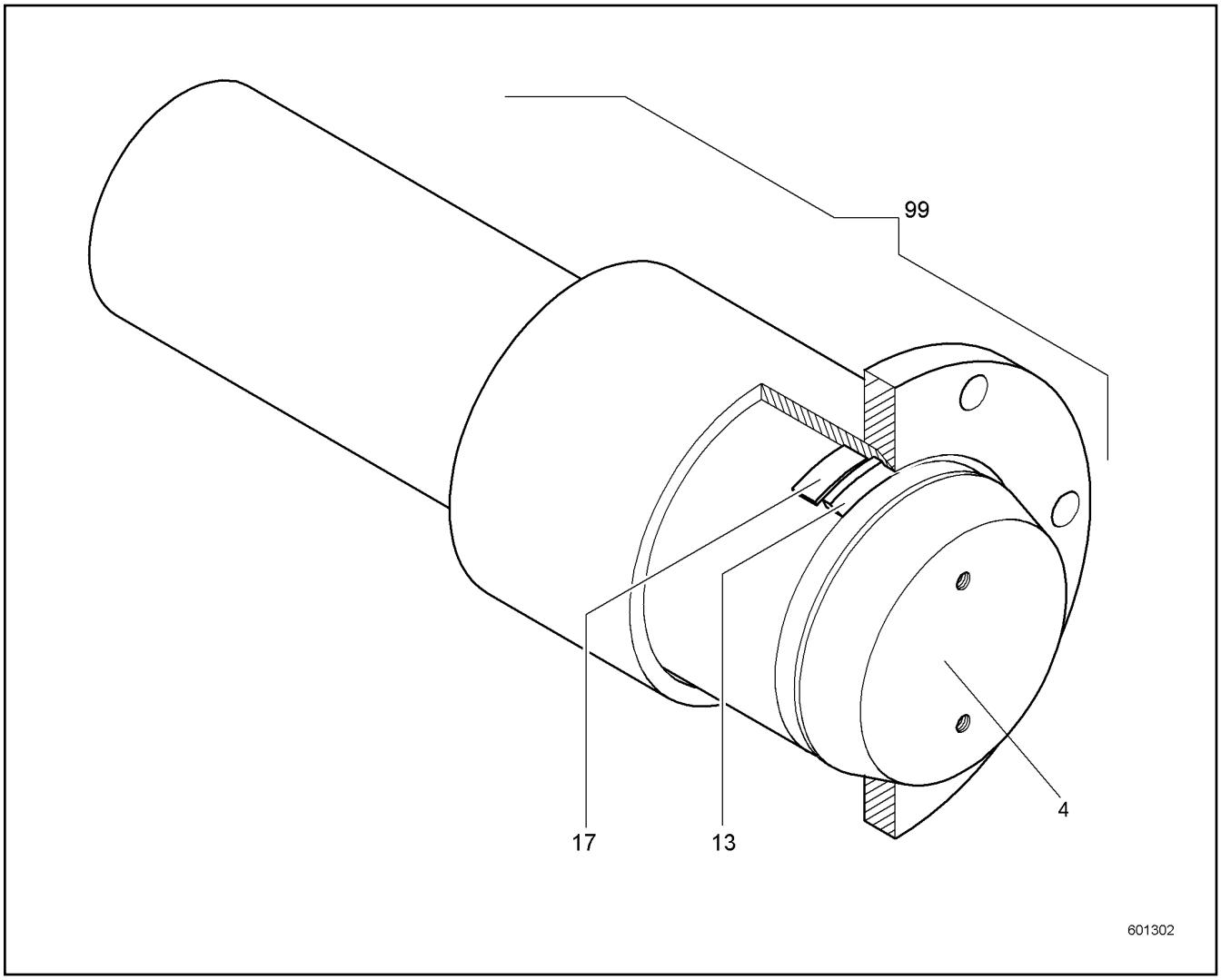

Pos.	Item	Quantity	Description	Bezeichnung	Serie	K
4	11230438	1	PIN 150X330	BOLZEN		
13	726054214	1	SCRAPER RING	ABSTREIFRING		
17	513319814	1	ROD GUIDE RING	STANGENFUEHRUNGSRING		
99	513319014	1	SEALING SET CPL CYL	DS KPL ZYL		

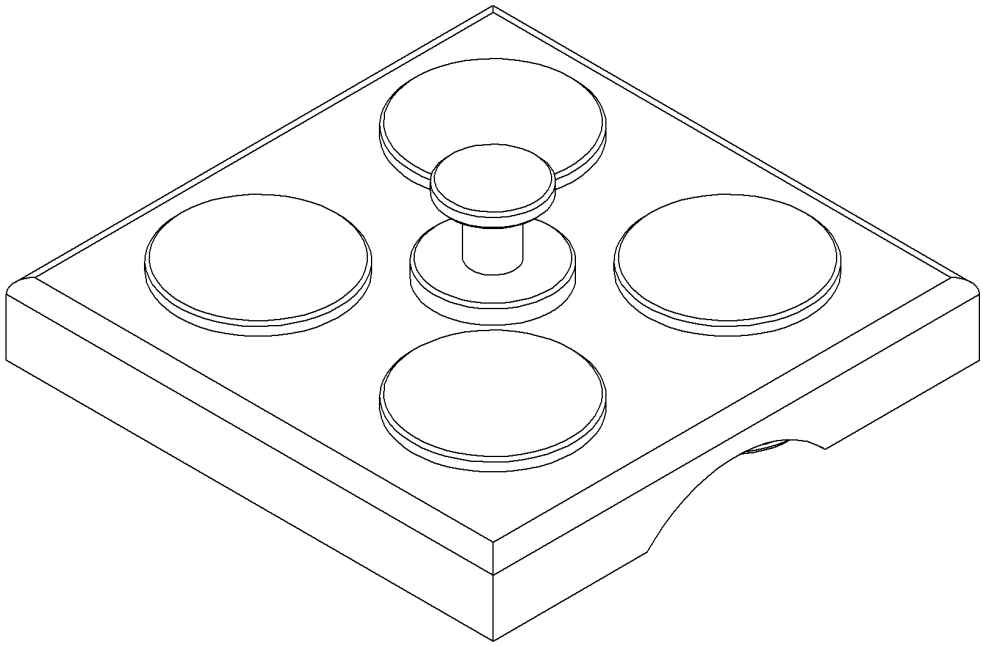

607747

Pos.	Item	Quantity	Description	Bezeichnung	Serie	K
1	11247913	4	PLUG	STECKER		

ACHTUNG !
ATTENTION !
ATTENTION !
ATENCIÓN !
ATENÇÃO !
ВНИМАНИЕ

Für Schlauchbestellungen kann über die Schlauchnummer, in der entsprechenden Schlauchliste, die Identnummer festgestellt werden.

For ordering flexible hoses you can find the identification number through the hose-number in the corresponding hose-list.

Pour des ordres de tuyau flexible le nombre d'identification on voit dans la liste de tuyau flexible correspondente.

Para el pedido de manguera, indicar el número de identificación de la manguera de la lista respectiva.

Para se encomendar uma mangueira, consulte o número de identificaçao na respectiva lista de mangueiras.

Для оформления заказов на шланги/рукавы идент. № может быть определен при помощи номера шланга/рукава, указанного в соотетствующем перечне шлангов/рукавов.

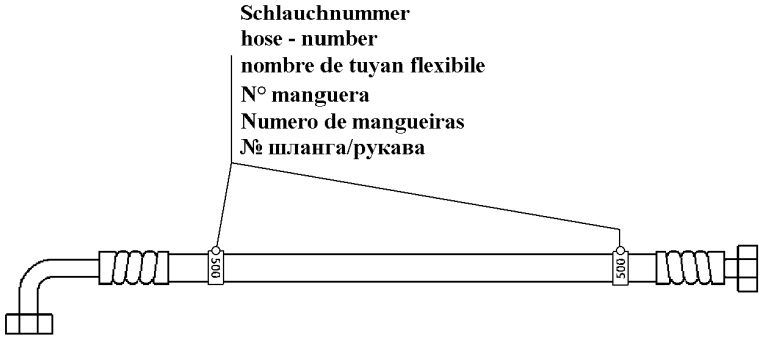

500000

Pos.	Item	Quantity	Description	Bezeichnung	Serie	K
102	928209814	1	HOSE CPL	SCHLAUCH KPL		
103	928872514	1	HOSE CPL	SCHLAUCH KPL		
104	993204614	1	HOSE CPL	SCHLAUCH KPL		
107	928209814	1	HOSE CPL	SCHLAUCH KPL		
108	928872814	1	HOSE CPL	SCHLAUCH KPL		
109	993204614	1	HOSE CPL	SCHLAUCH KPL		
112	911247914	1	HOSE CPL	SCHLAUCH KPL		
113	919158314	1	HOSE CPL	SCHLAUCH KPL		
116	911247914	1	HOSE CPL	SCHLAUCH KPL		
117	919158314	1	HOSE CPL	SCHLAUCH KPL		
118	928152414	1	HOSE CPL	SCHLAUCH KPL		
119	995437214	1	HOSE CPL	SCHLAUCH KPL		
122	928137514	1	HOSE CPL	SCHLAUCH KPL		
127	918272514	1	HOSE CPL	SCHLAUCH KPL		
130	918803414	1	HOSE CPL	SCHLAUCH KPL		
131	928127314	1	HOSE CPL	SCHLAUCH KPL		
132	929390914	1	HOSE CPL	SCHLAUCH KPL		
133	928293114	1	HOSE CPL	SCHLAUCH KPL		
134	928293114	1	HOSE CPL	SCHLAUCH KPL		
135	918803414	1	HOSE CPL	SCHLAUCH KPL		
136	928127314	1	HOSE CPL	SCHLAUCH KPL		
137	929390914	1	HOSE CPL	SCHLAUCH KPL		
138	911292114	1	HOSE CPL	SCHLAUCH KPL		
139	928538414	1	HOSE CPL	SCHLAUCH KPL		
140	995219914	1	HOSE CPL	SCHLAUCH KPL		
142	918803414	1	HOSE CPL	SCHLAUCH KPL		

ACHTUNG !
ATTENTION !
ATTENTION !
ATENCIÓN !
ATENÇÃO !
ВНИМАНИЕ

Für Schlauchbestellungen kann über die Schlauchnummer, in der entsprechenden Schlauchliste, die Identnummer festgestellt werden.

For ordering flexible hoses you can find the identification number through the hose-number in the corresponding hose-list.

Pour des ordres de tuyau flexible le nombre d'identification on voit dans la liste de tuyau flexible correspondente.

Para el pedido de manguera, indicar el número de identificación de la manguera de la lista respectiva.

Para se encomendar uma mangueira, consulte o número de identificaçao na respectiva lista de mangueiras.

Для оформления заказов на шланги/рукавы идент. № может быть определен при помощи номера шланга/рукава, указанного в соотетствующем перечне шлангов/рукавов.

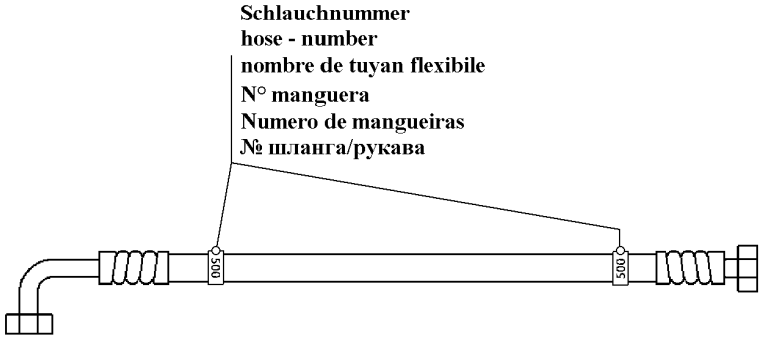

500000

Pos.	Item	Quantity	Description	Bezeichnung	Serie	K
143	928127314	1	HOSE CPL	SCHLAUCH KPL		
144	928127314	1	HOSE CPL	SCHLAUCH KPL		
145	918803414	1	HOSE CPL	SCHLAUCH KPL		
150	928973314	1	HOSE CPL	SCHLAUCH KPL		
151	928169614	1	HOSE CPL	SCHLAUCH KPL		
152	991312114	1	HOSE CPL	SCHLAUCH KPL		
153	929467714	1	HOSE CPL	SCHLAUCH KPL		
154	928865914	1	HOSE CPL	SCHLAUCH KPL		
155	991312114	1	HOSE CPL	SCHLAUCH KPL		
156	928973314	1	HOSE CPL	SCHLAUCH KPL		
157	929467714	1	HOSE CPL	SCHLAUCH KPL		
158	928865914	1	HOSE CPL	SCHLAUCH KPL		
159	928169614	1	HOSE CPL	SCHLAUCH KPL		
162	918820914	1	HOSE CPL	SCHLAUCH KPL		
163	928003714	1	HOSE CPL	SCHLAUCH KPL		
166	929399714	1	HOSE CPL	SCHLAUCH KPL		
167	995240114	1	HOSE CPL	SCHLAUCH KPL		

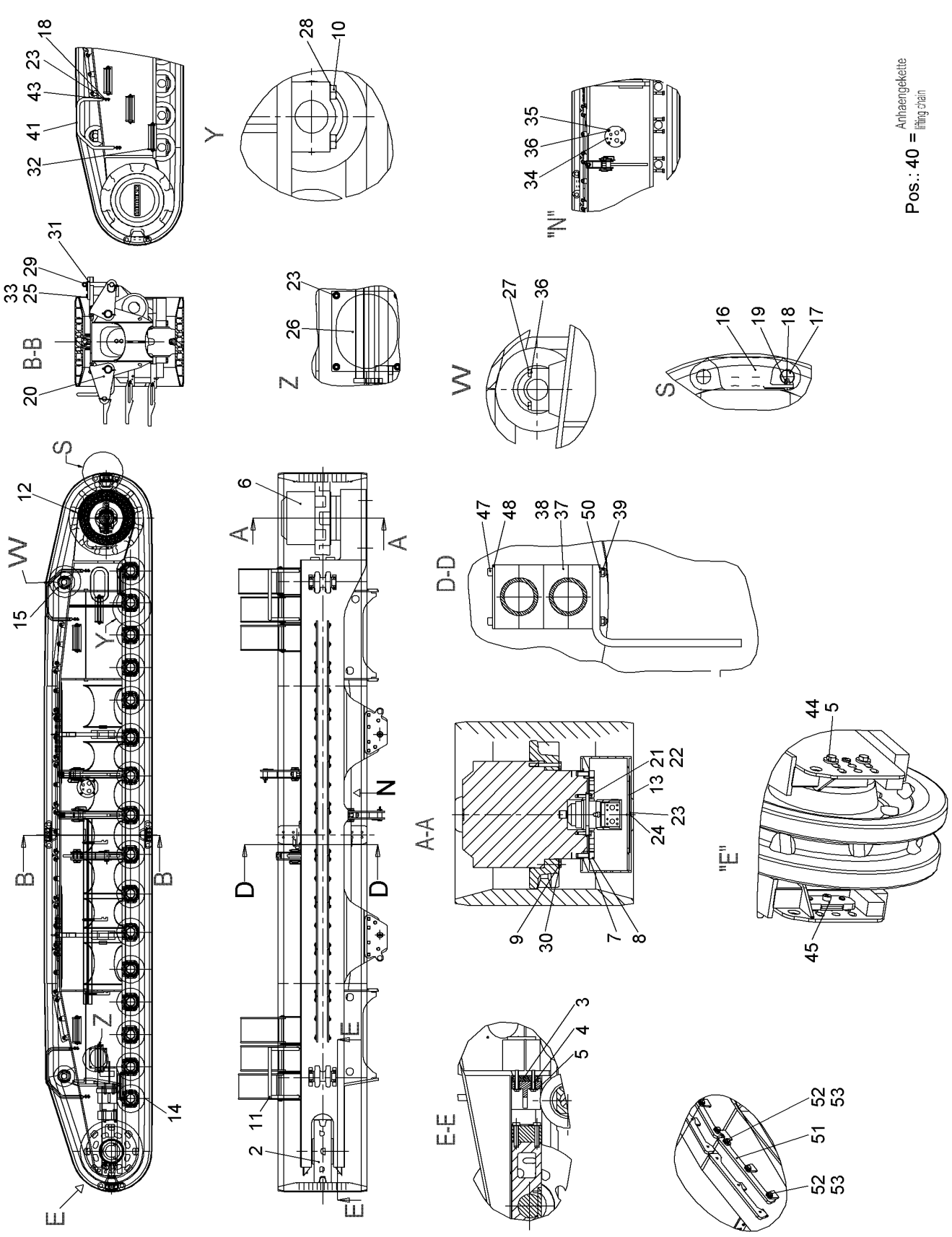

8.7.2015 517453	**138281_ETK_001**	407 (1/2)
LIEBHERR	**CRAWLER CARRIER RIGHT CPL** **RAUPENTRAEGER RE KPL**	**10 55 876 0**

Pos.	Item	Quantity	Description	Bezeichnung	Serie	K
2	10557161	1	GUIDE WHEEL UNIT CPL ⇨ ❑ 409	LEITRADEINHEIT KPL		
4	10543932	4	HEX SCREW ISO 4017 M20X130 10.9	SECHSKANTSCHRAUBE		
5	10567956	8	WASHER DIN 6340 21 C35	SCHEIBE		
6	969317801	1	TRACTION DRIVE ⇨ ❑ 411	FAHRANTRIEB		
7	421500614	30	WASHER EN 14399-6 30 ST	SCHEIBE		
8	10336668	30	SOCKET HEAD SCREW DIN 912 M30X2X80 12.	ZYLINDERSCHRAUBE		
9	460014603	45	WASHER DIN 6916 25 C45	SCHEIBE		
10	11246658	64	HEX SCREW ISO 4014 M30X165 10.9	SECHSKANTSCHRAUBE		
11	10523559	1	HANDRAIL	HANDLAUF		
12	10521183	1	SPROCKET	TURAS		
13	971333403	1	COVER	DECKEL		
14	10552633	16	RUNNING ROLLER CPL	LAUFROLLE KPL		
15	790523314	2	CARRYING ROLLER CPL ⇨ ❑ 413	TRAGROLLE KPL		
16	388291208	72	FLOOR PLATE	BODENPLATTE		
17	954584908	144	ROUND STEEL	RUNDSTAHL		
18	406517314	152	HEX SCREW ISO 4017 M12X30 A4-70	SECHSKANTSCHRAUBE		
19	10540495	144	HEX NUT ISO 10511 M12 A4	SECHSKANTMUTTER		
20	971333503	3	TRANSPORT BRACKET CPL	TRANSPORTARM KPL		
21	10544174	2	WASHER ISO 7089 20	SCHEIBE		
22	10545854	2	HEX SCREW ISO 4017 M20X75 10.9	SECHSKANTSCHRAUBE		
23	420001514	15	WASHER ISO 7089 12 A4	SCHEIBE		
24	406517914	7	HEX SCREW ISO 4017 M12X25 A4-70	SECHSKANTSCHRAUBE		
25	10543944	12	HEX SCREW ISO 4017 M24X80 10.9	SECHSKANTSCHRAUBE		
27	10543910	8	HEX SCREW ISO 4017 M16X90 10.9	SECHSKANTSCHRAUBE		
28	10544177	64	WASHER ISO 7089 30	SCHEIBE		
29	992921714	2	PIN CPL	BOLZEN KPL		
30	406154014	45	HEX SCREW ISO 8765 M24X2X200 10.9	SECHSKANTSCHRAUBE		
31	954373603	2	WP	WP		
32	10501795	6	ACCESS CPL ⇨ ❑ 414	AUFSTIEG KPL		
33	10544176	12	WASHER ISO 7089 24	SCHEIBE		
34	10558762	1	DIAPHRAGM	SCHOTTBLECH		
35	10539315	4	HEX SCREW ISO 4017 M16X25 10.9	SECHSKANTSCHRAUBE		
36	10544172	12	WASHER ISO 7089 16	SCHEIBE		
37	510511814	2	HOSE	SCHLAUCH		
38	7413103	12	CLAMP-HALF	KLEMMHAELFTE		
39	10540492	6	HEX NUT ISO 10511 M6 A4	SECHSKANTMUTTER		
40	990835714	1	ATTACHMENT CHAIN ⇨ ❑ 415	ANHAENGEKETTE		
41	10518461	1	HANDRAIL	HANDLAUF		
43	411516914	8	HEX NUT ISO 4032 M12 A4-70	SECHSKANTMUTTER		
44	10543920	4	HEX SCREW ISO 4017 M20X40 10.9	SECHSKANTSCHRAUBE		
45	10539631	2	LIMIT STOP	ANSCHLAG		
47	10446871	6	SOCKET HEAD SCREW ISO 4762 M6X155 10.9	ZYLINDERSCHRAUBE		
48	602026414	3	LID PLATE	DECKPLATTE		
50	420000414	6	WASHER ISO 7089 6 A4	SCHEIBE		
52	10539317	54	HEX SCREW ISO 4017 M16X35 10.9	SECHSKANTSCHRAUBE		
53	421600901	54	WASHER DIN 7349 17 ST	SCHEIBE		

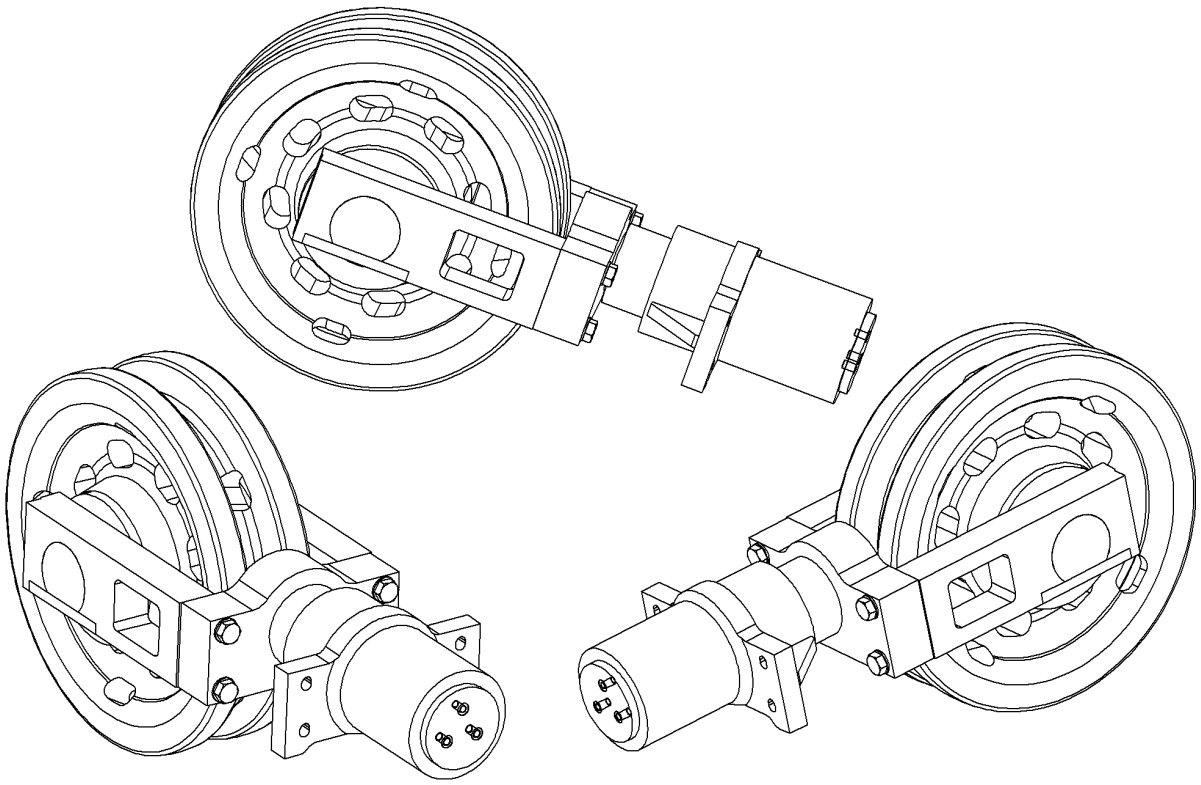

Pos.	Item	Quantity	Description	Bezeichnung	Serie	K
1	10557162	1	GUIDE WHEEL CPL ⇨ ❑ 410	LEITRAD KPL		
2	10557163	1	TENSION JACK HYDR CPL	SPANNER HYDR KPL		

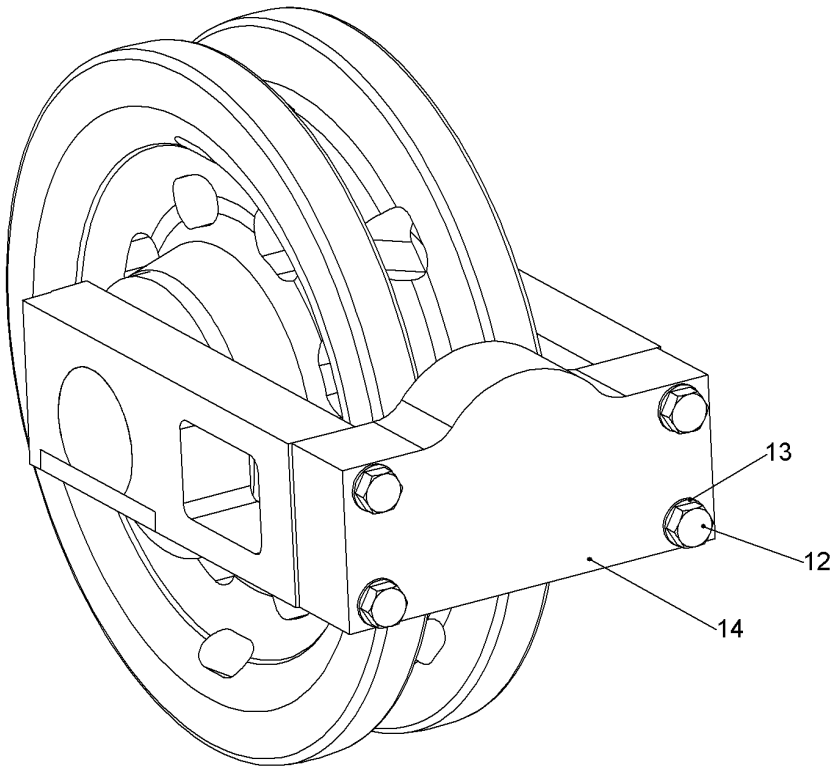

Pos.	Item	Quantity	Description	Bezeichnung	Serie	K
1	11299752	1	GUIDE WHEEL	LEITRAD		
2	11890145	2	BUSHING	BUCHSE		
12	10590183	4	SCREW M30X1.5X150	SCHRAUBE		
13	10544177	4	WASHER ISO 7089 30	SCHEIBE		
14	10589483	1	TRAVERSE	TRAVERSE		

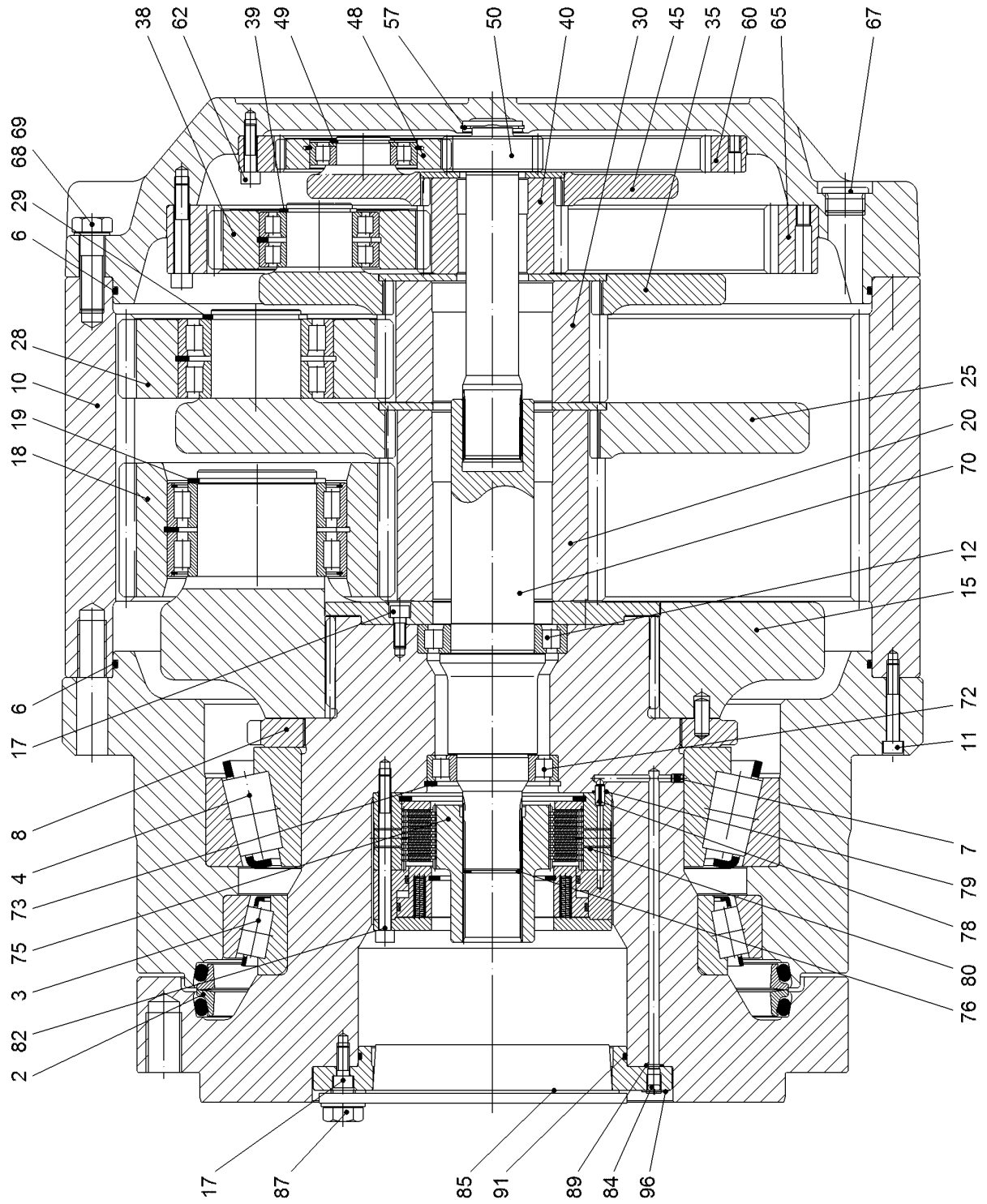
38
62
39
49
48
57
50
40
30
45
35
60
65
67
68 69
29
6
28
10
19
18
25
20
70
12
15
6
17
72
11
8
7
4
79
73
78
75
80
3
76
82
2
17
87
85
91
89
84
96
606629

Pos.	Item	Quantity	Description	Bezeichnung	Serie	K
2	7610244	1	AXIAL FACE SEAL	GLEITRINGDICHTUNG		
3	761008703	1	TAPERED ROLLER BEARING	KEGELROLLENLAGER		
4	746225801	1	TAPERED ROLLER BEARING	KEGELROLLENLAGER		
6	726450601	2	O-RING	O-RING		
7	7380480	1	SEALING PLUG	DICHTSTOPFEN		
8	944403703	1	ADJUSTING NUT	EINSTELLMUTTER		
10	944403803	1	INNER WHEEL	INNENRAD		
11	4630200	15	SOCKET HEAD SCREW ISO 4762 M10X65 10.9	ZYLINDERSCHRAUBE		
12	7610021	1	CYL ROLLER BEARING	ZYL ROLLENLAGER		
15	944403903	1	PLANETARY CARRIER	PLANETENTRAEGER		
17	4043124	12	SOCKET HEAD SCREW ISO 4762 M10X25 10.9	ZYLINDERSCHRAUBE		
18	944404303	5	PLANET WHEEL	PLANETENRAD		
19	428011901	5	LOCKING RING DIN 471 100X4 FEDERSTAHL/	SICHERUNGSRING		
20	944404503	1	SUN WHEEL	SONNENRAD		
25	944404603	1	PLANETARY CARRIER	PLANETENTRAEGER		
28	944404803	3	PLANET WHEEL	PLANETENRAD		
29	10171594	3	LOCKING RING DIN 471	SICHERUNGSRING		
30	944405203	1	SUN WHEEL	SONNENRAD		
35	944406403	1	PLANETARY CARRIER	PLANETENTRAEGER		
38	944406503	3	PLANET WHEEL	PLANETENRAD		
39	400093303	3	LOCKING RING DIN 471 55X3	SICHERUNGSRING		
40	9443784	1	SUN WHEEL	SONNENRAD		
45	969392201	1	PLANETARY CARRIER	PLANETENTRAEGER		
48	944434703	3	PLANET WHEEL	PLANETENRAD		
49	10171583	3	LOCKING RING DIN 471 45X1.75	SICHERUNGSRING		
50	944434903	1	DRIVE SHAFT	ANTRIEBSWELLE		
57	429612001	1	L RING JL50X2	L-RING		
60	944378903	1	INNER WHEEL	INNENRAD		
62	4900981	24	SOCKET HEAD SCREW ISO 4762 M10X45 10.9	ZYLINDERSCHRAUBE		
65	944406703	1	INNER WHEEL	INNENRAD		
67	409710601	3	SCREW PLUG AEHNL.DIN 908 M33X2 ST	VERSCHLUSSSCHRAUBE		
68	10543925	12	HEX SCREW ISO 4017 M20X65 10.9	SECHSKANTSCHRAUBE		
69	423912001	12	LOCK WASHER 20X21X30X2.8 VS	SICHERUNGSSCHEIBE		
70	944405903	1	INTERMEDIATE SHAFT	ZWISCHENWELLE		
72	761001103	1	CYL ROLLER BEARING	ZYL ROLLENLAGER		
73	10171636	1	LOCKING RING DIN 472 110X4	SICHERUNGSRING		
75	944406203	1	MULTI-DISC CARRIER	LAMELLENTRAEGER		
76	428107101	1	LOCKING RING DIN 472 46X1.75	SICHERUNGSRING		
78	432008001	1	DOWEL PIN ISO 8752 8X16 ST	SPANNSTIFT		
79	726410201	1	O-RING	O-RING		
80	502037201	1	SPRING LOADED MULTI-DISC BRAKE	FEDERDRUCKLAMELLENBREMS		
82	4002442	12	SOCKET HEAD SCREW ISO 4762 M10X130 10.	ZYLINDERSCHRAUBE		
84	779016501	1	BLANKING PLUG	VERSCHLUSSSTOPFEN		
85	779006901	1	CONICAL PLUG	KEGELSTOPFEN		
87	10543920	2	HEX SCREW ISO 4017 M20X40 10.9	SECHSKANTSCHRAUBE		
89	726403201	1	O-RING	O-RING		
91	726428401	1	O-RING	O-RING		

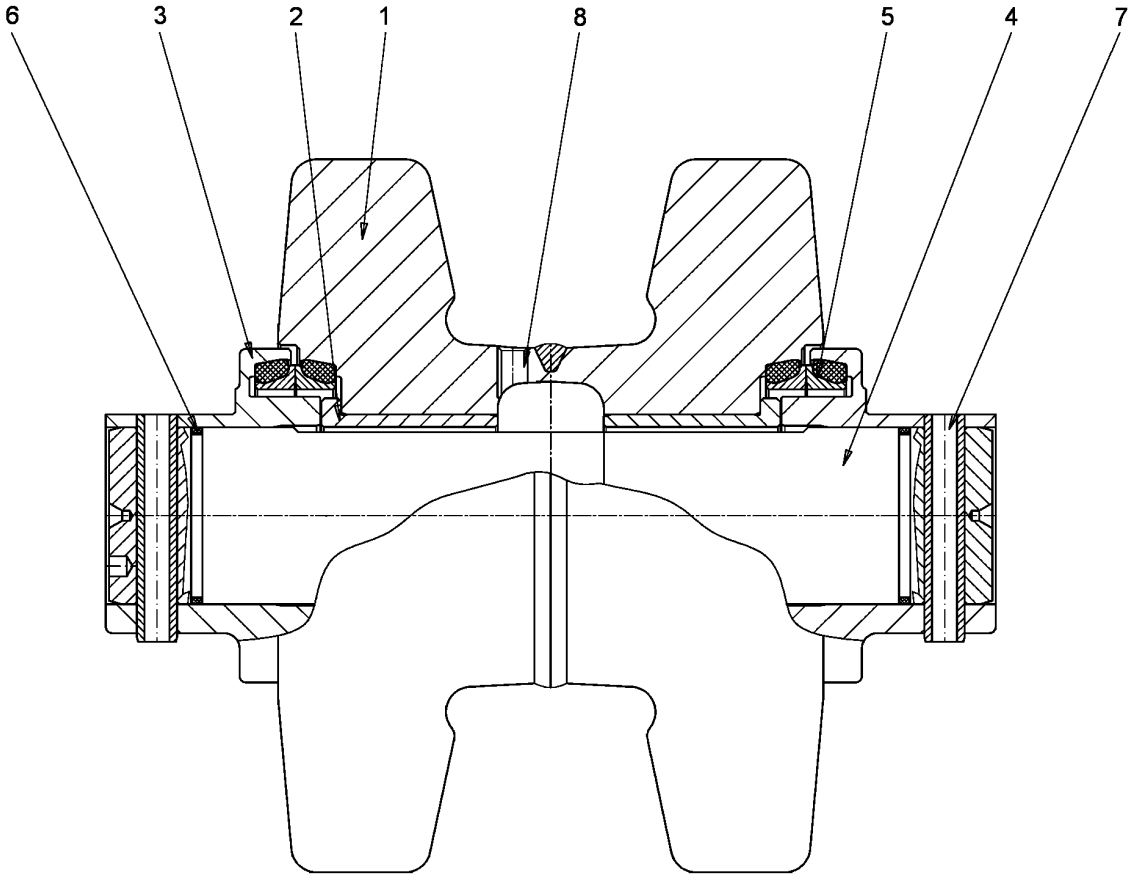

Pos.	Item	Quantity	Description	Bezeichnung	Serie	K
1	10097984	1	ROLLER CORE	ROLLENKOERPER		
2	10097992	2	BUSHING	BUCHSE		
3	10097985	2	END PIECE	ENDSTUECK		
4	10097986	1	AXLE	ACHSE		
5	10097987	2	AXIAL FACE SEAL	GLEITRINGDICHTUNG		
6	10097988	2	O-RING	O-RING		
7	10097989	2	CLAMPING SLEEVE	SPANNHUELSE		
8	10097983	1	SCREW PLUG	VERSCHLUSSSCHRAUBE		

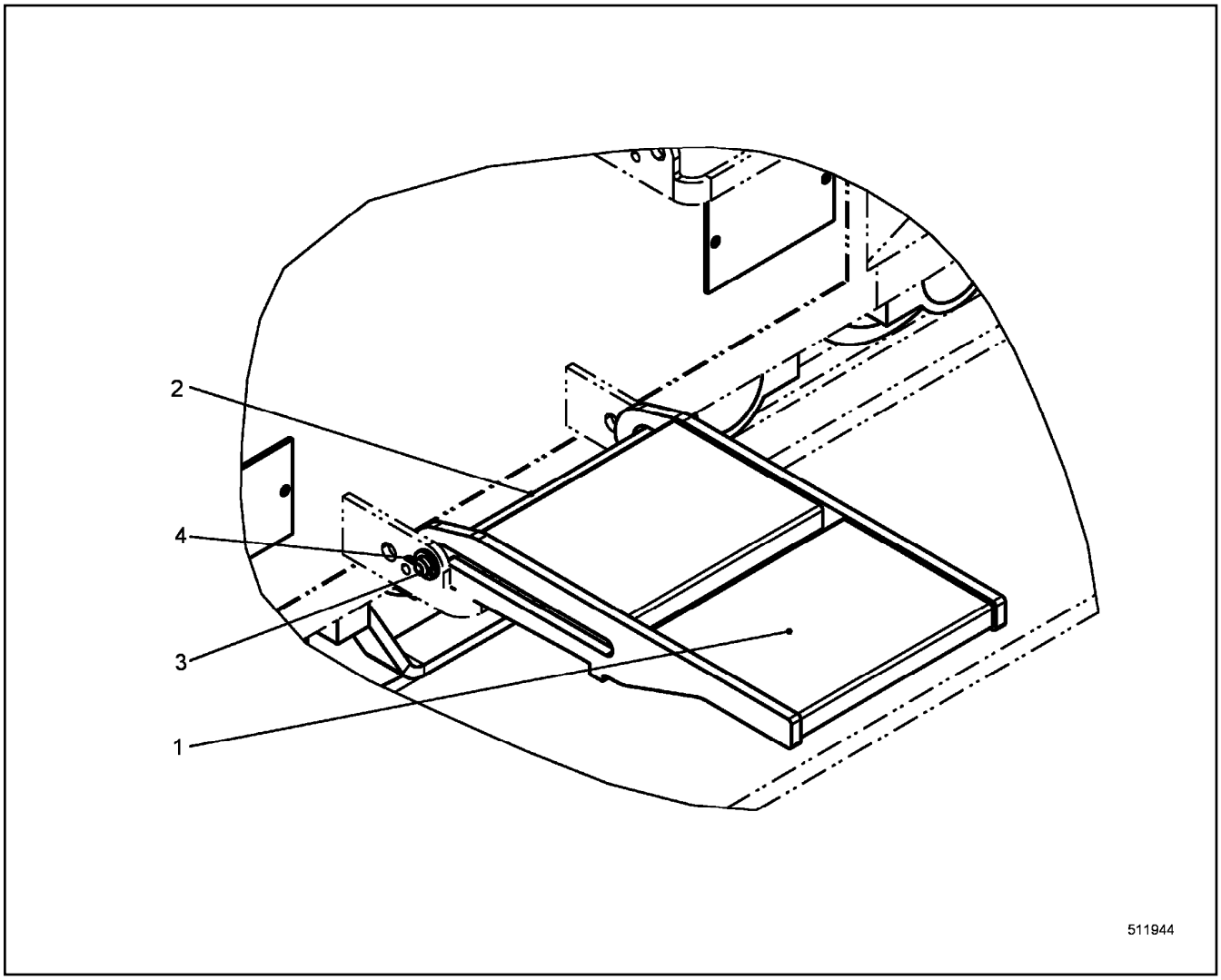

Pos.	Item	Quantity	Description	Bezeichnung	Serie	K
1	10501783	1	STEP	TRITTSTUFE		
2	10501796	1	PIN RD20X394 LHRD750-30;10019758	BOLZEN		
3	421101814	2	WASHER DIN EN 28738 22 ST;	SCHEIBE		
4	433006314	2	SPLIT PIN ISO 1234 5X32	SPLINT		

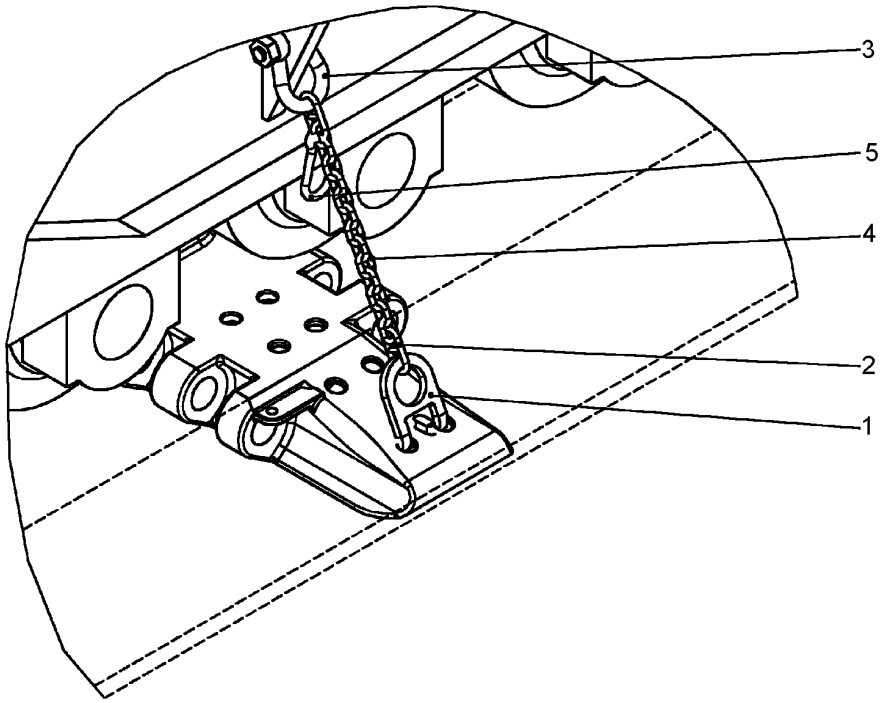

Pos.	Item	Quantity	Description	Bezeichnung	Serie	K
1	971304903	2	BRACKET	BUEGEL		
2	773967214	4	CHAIN CONNECTION LOCK	KETTENVERBINDUNGSSCHLOS		
3	773954714	2	SHACKLE	SCHAEKEL		
4	740000908	0.624	CHAIN	KETTE		
5	744010414	2	SNAP HOOK	KARABINERHAKEN		

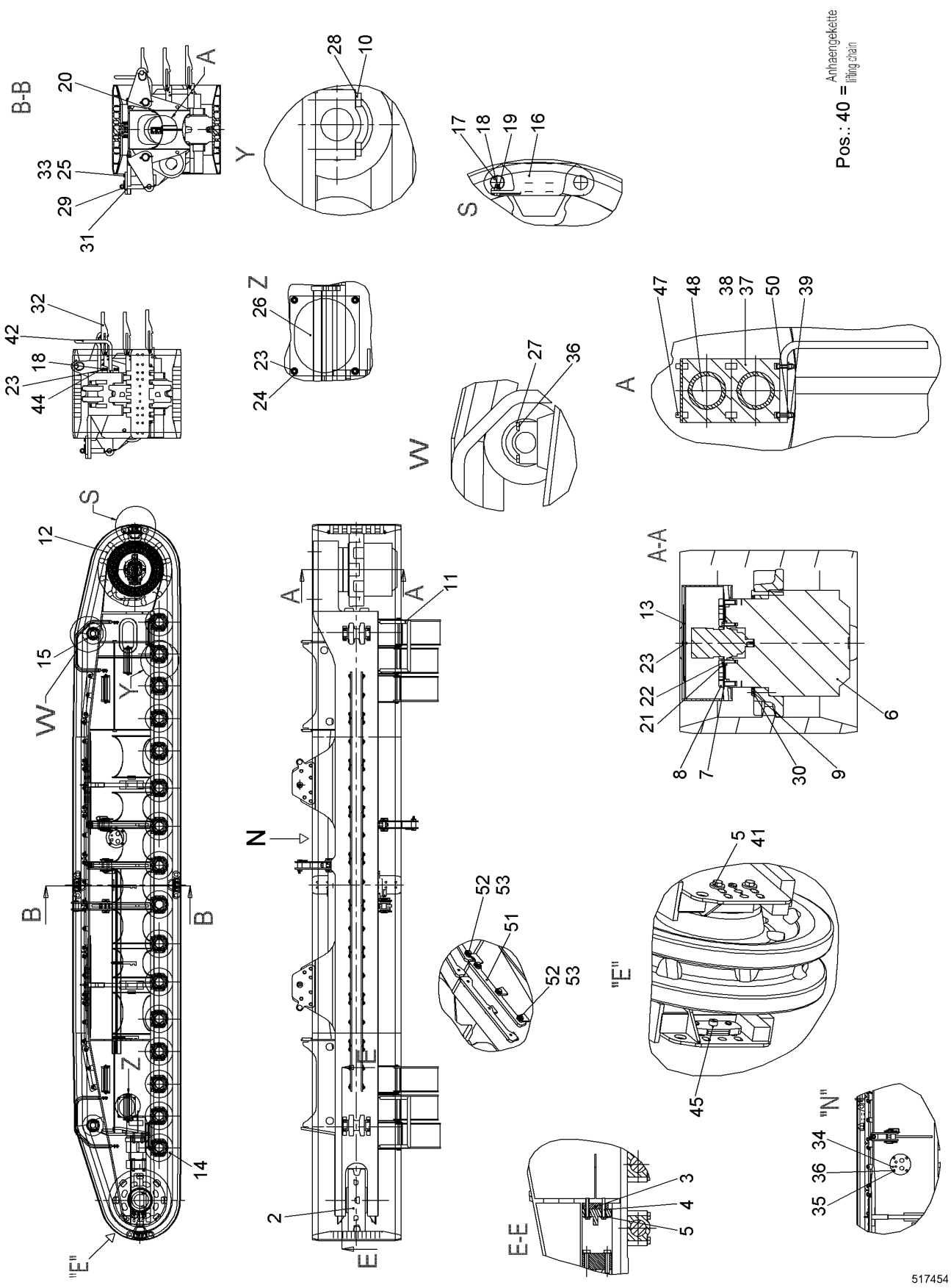

8.7.2015 517454	**138281_ETK_001**	416 (1/2)
LIEBHERR	**CRAWLER CARRIER LEFT CPL** **RAUPENTRAEGER LI KPL**	**10 55 876 1**

Pos.	Item	Quantity	Description	Bezeichnung	Serie	K
2	10557161	1	GUIDE WHEEL UNIT CPL ⇨ ❑ 409	LEITRADEINHEIT KPL		
4	10543932	4	HEX SCREW ISO 4017 M20X130 10.9	SECHSKANTSCHRAUBE		
5	10567956	8	WASHER DIN 6340 21 C35	SCHEIBE		
6	969317801	1	TRACTION DRIVE ⇨ ❑ 411	FAHRANTRIEB		
7	421500614	30	WASHER EN 14399-6 30 ST	SCHEIBE		
8	10336668	30	SOCKET HEAD SCREW DIN 912 M30X2X80 12.	ZYLINDERSCHRAUBE		
9	460014603	45	WASHER DIN 6916 25 C45	SCHEIBE		
10	11246658	64	HEX SCREW ISO 4014 M30X165 10.9	SECHSKANTSCHRAUBE		
11	10523559	1	HANDRAIL	HANDLAUF		
12	10521183	1	SPROCKET	TURAS		
13	971333403	1	COVER	DECKEL		
14	10552633	16	RUNNING ROLLER CPL	LAUFROLLE KPL		
15	790523314	2	CARRYING ROLLER CPL ⇨ ❑ 413	TRAGROLLE KPL		
16	388291208	72	FLOOR PLATE	BODENPLATTE		
17	954584908	144	ROUND STEEL	RUNDSTAHL		
18	406517314	152	HEX SCREW ISO 4017 M12X30 A4-70	SECHSKANTSCHRAUBE		
19	10540495	144	HEX NUT ISO 10511 M12 A4	SECHSKANTMUTTER		
20	971333503	3	TRANSPORT BRACKET CPL	TRANSPORTARM KPL		
21	10544174	2	WASHER ISO 7089 20	SCHEIBE		
22	10545854	2	HEX SCREW ISO 4017 M20X75 10.9	SECHSKANTSCHRAUBE		
23	420001514	15	WASHER ISO 7089 12 A4	SCHEIBE		
24	406517914	7	HEX SCREW ISO 4017 M12X25 A4-70	SECHSKANTSCHRAUBE		
25	10543944	12	HEX SCREW ISO 4017 M24X80 10.9	SECHSKANTSCHRAUBE		
27	10543910	8	HEX SCREW ISO 4017 M16X90 10.9	SECHSKANTSCHRAUBE		
28	10544177	64	WASHER ISO 7089 30	SCHEIBE		
29	992921714	2	PIN CPL	BOLZEN KPL		
30	406154014	45	HEX SCREW ISO 8765 M24X2X200 10.9	SECHSKANTSCHRAUBE		
31	954373603	2	WP	WP		
32	10501795	6	ACCESS CPL ⇨ ❑ 414	AUFSTIEG KPL		
33	10544176	12	WASHER ISO 7089 24	SCHEIBE		
34	10558762	1	DIAPHRAGM	SCHOTTBLECH		
35	10539315	4	HEX SCREW ISO 4017 M16X25 10.9	SECHSKANTSCHRAUBE		
36	10544172	12	WASHER ISO 7089 16	SCHEIBE		
37	510511814	2	HOSE	SCHLAUCH		
38	7413103	12	CLAMP-HALF	KLEMMHAELFTE		
39	10540492	6	HEX NUT ISO 10511 M6 A4	SECHSKANTMUTTER		
40	990835714	1	ATTACHMENT CHAIN ⇨ ❑ 415	ANHAENGEKETTE		
41	10543920	4	HEX SCREW ISO 4017 M20X40 10.9	SECHSKANTSCHRAUBE		
42	10518461	1	HANDRAIL	HANDLAUF		
44	411516914	8	HEX NUT ISO 4032 M12 A4-70	SECHSKANTMUTTER		
45	10539631	2	LIMIT STOP	ANSCHLAG		
47	10446871	6	SOCKET HEAD SCREW ISO 4762 M6X155 10.9	ZYLINDERSCHRAUBE		
48	602026414	3	LID PLATE	DECKPLATTE		
50	420000414	6	WASHER ISO 7089 6 A4	SCHEIBE		
52	10539317	54	HEX SCREW ISO 4017 M16X35 10.9	SECHSKANTSCHRAUBE		
53	421600901	54	WASHER DIN 7349 17 ST	SCHEIBE		

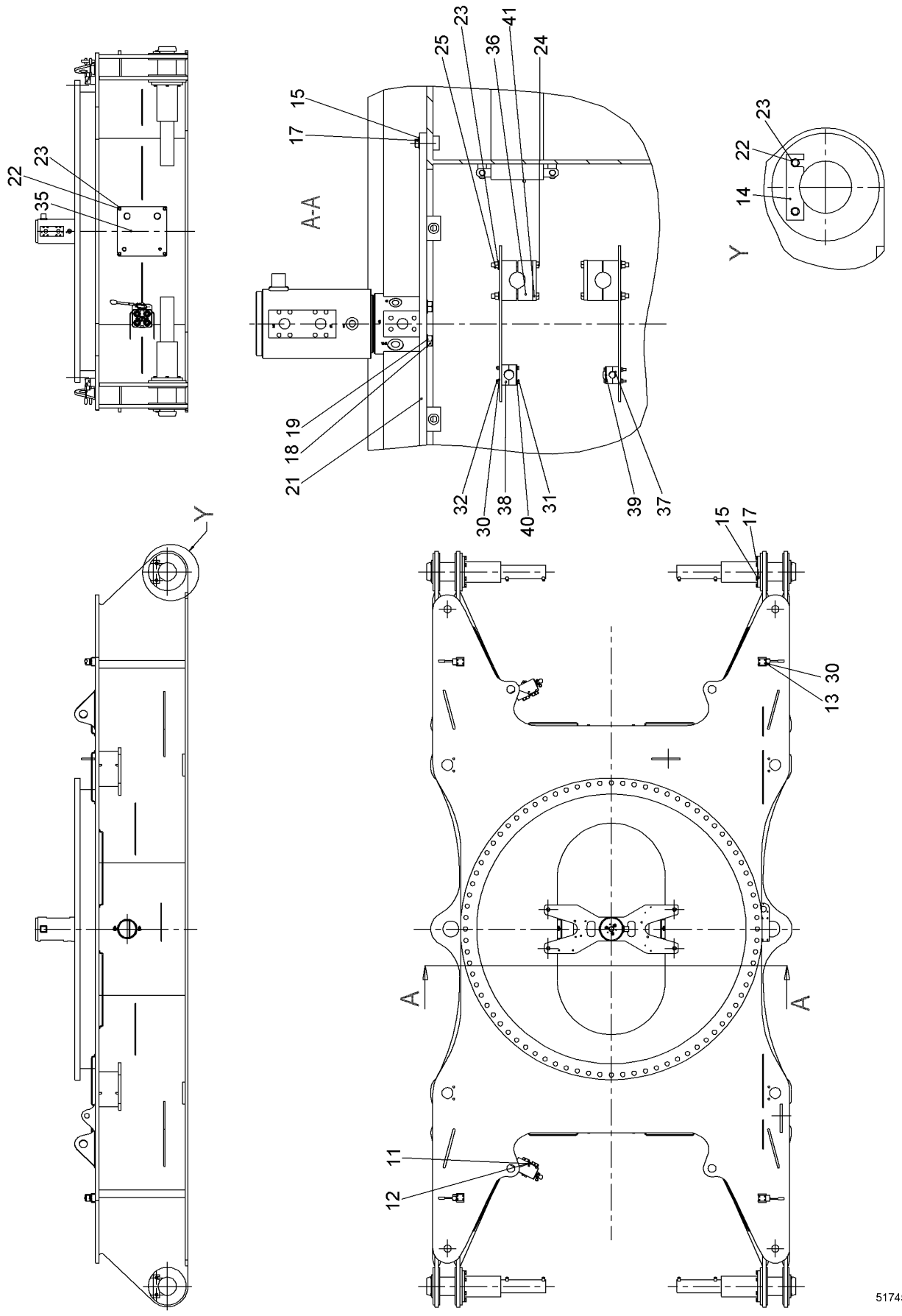
22
23
35
A-A
15
17
25
23
36
41
24
21
18
19
32
30
38
40
31
39
37
Y
23
22
14
Y
15
17
13
30
A
A
11
12
517450

Pos.	Item	Quantity	Description	Bezeichnung	Serie	K
11	406501414	6	HEX SCREW ISO 4017 M8X25 A4-70	SECHSKANTSCHRAUBE		
12	420001014	6	WASHER ISO 7089 8 A4	SCHEIBE		
13	10526837	16	HEX SCREW ISO 4017 M6X50 A4-70	SECHSKANTSCHRAUBE		
14	954372503	4	AXLE HOLDER	ACHSHALTER		
15	10544172	28	WASHER ISO 7089 16	SCHEIBE		
17	10539318	28	HEX SCREW ISO 4017 M16X40 10.9	SECHSKANTSCHRAUBE		
18	10543921	4	HEX SCREW ISO 4017 M20X45 10.9	SECHSKANTSCHRAUBE		
19	10544174	4	WASHER ISO 7089 20	SCHEIBE		
22	406517314	16	HEX SCREW ISO 4017 M12X30 A4-70	SECHSKANTSCHRAUBE		
23	420001514	24	WASHER ISO 7089 12 A4	SCHEIBE		
24	10538834	8	HEX SCREW ISO 4017 M12X130 A4-70	SECHSKANTSCHRAUBE		
25	411516914	8	HEX NUT ISO 4032 M12 A4-70	SECHSKANTMUTTER		
30	420000414	24	WASHER ISO 7089 6 A4	SCHEIBE		
31	10538801	8	HEX SCREW ISO 4017 M6X60 A4-70	SECHSKANTSCHRAUBE		
32	411517114	8	HEX NUT ISO 4032 M6 A4-70	SECHSKANTMUTTER		
35	11235482	2	DIAPHRAGM	SCHOTTBLECH		
36	602010114	8	CLAMP-HALF	KLEMMHAELFTE		
37	7404678	4	CLAMP-HALF	KLEMMHAELFTE		
38	602008808	4	CLAMP-HALF	KLEMMHAELFTE		
39	7005053	2	LID PLATE	DECKPLATTE		
40	7008583	2	LID PLATE	DECKPLATTE		
41	5005525	4	LID PLATE	DECKPLATTE		

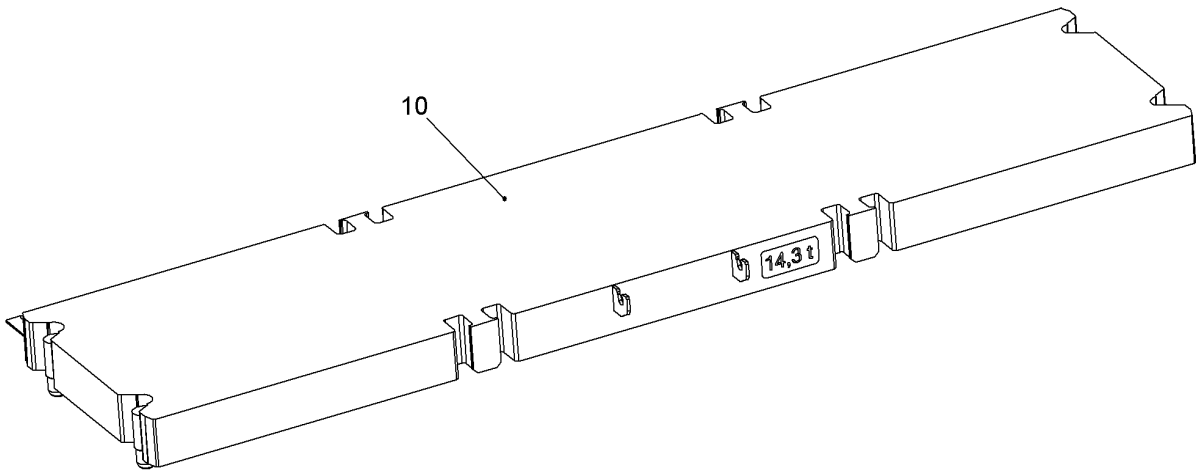

518189

Pos.	Item	Quantity	Description	Bezeichnung	Serie	K
10	11242597	4	CENTRAL COUNTERW. ST.CONST.	ZENTRALBALLAST SCHWK		

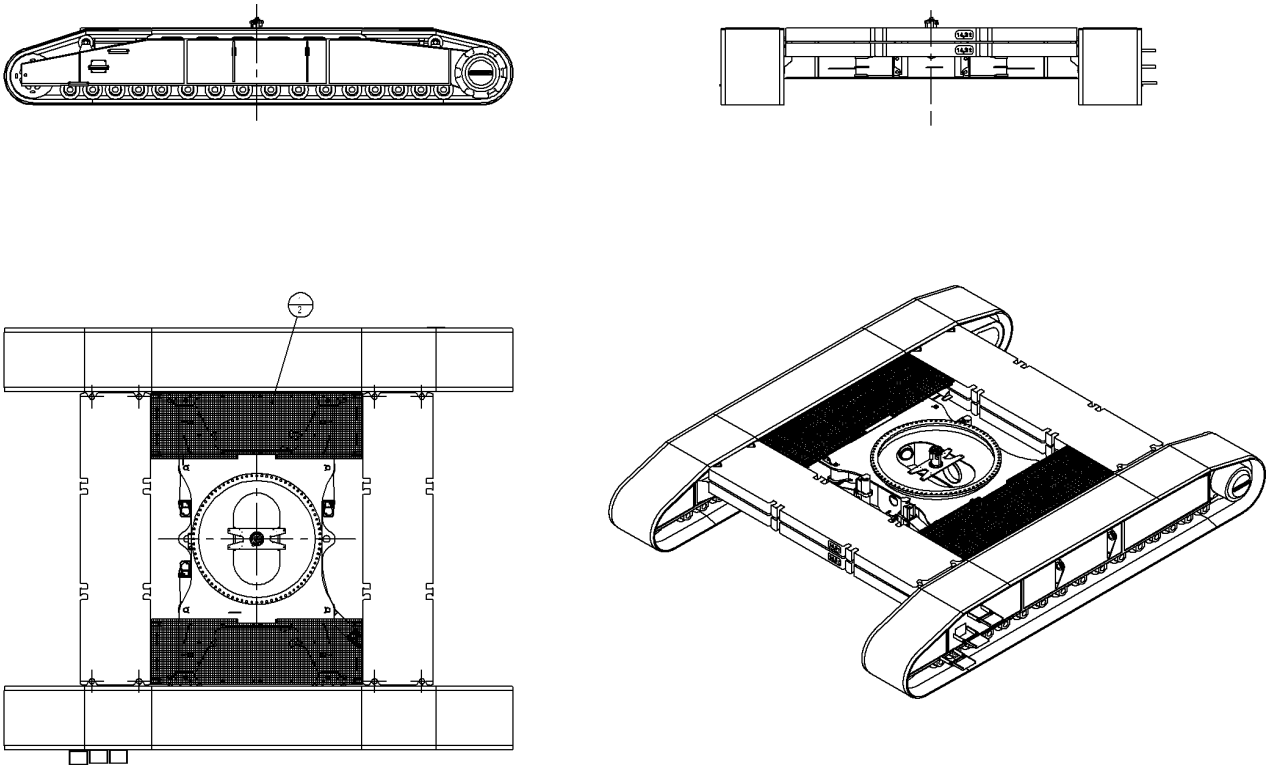

Pos.	Item	Quantity	Description	Bezeichnung	Serie	K
1	992671814	2	PEDESTAL ⇨ ❑ 422	PODEST		

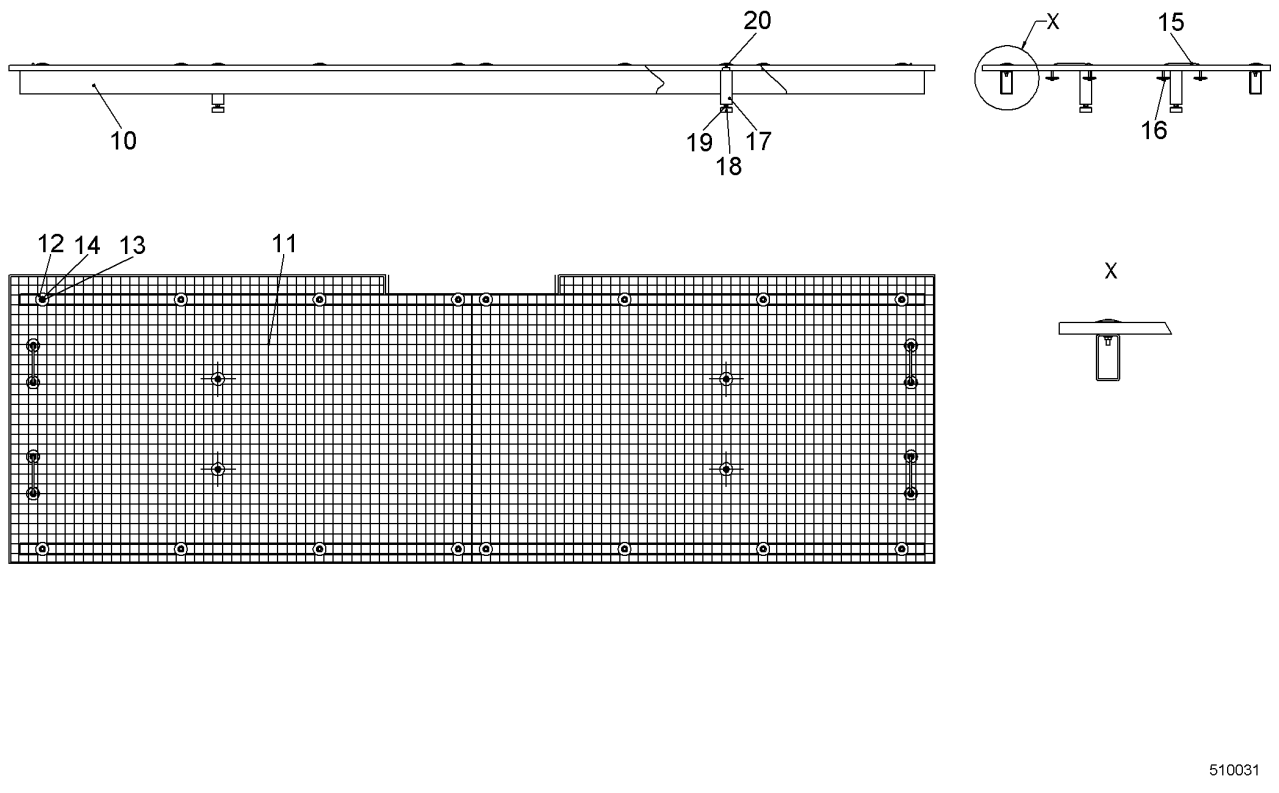

Pos.	Item	Quantity	Description	Bezeichnung	Serie	K
10	958097914	2	BRACING TUBE	TRAGROHR		
11	10227124	1	GRATING	GITTERROST		
12	10098157	28	DISH	TELLER		
13	10538807	16	HEX SCREW ISO 4017 M8X50 A4-70	SECHSKANTSCHRAUBE		
14	485569314	16	HEX NUT EN 1661 M8 A2	SECHSKANTMUTTER		
15	958478414	4	BRACKET	BUEGEL		
16	10540493	8	HEX NUT ISO 10511 M8 A4	SECHSKANTMUTTER		
17	10227757	4	SPACER PIECE	DISTANZSTUECK		
18	726611214	4	RUBBER MOUNT	LAGER GUMMI		
19	4000383	4	HEX NUT ISO 4032 M10 10	SECHSKANTMUTTER		
20	406501314	4	HEX SCREW ISO 4017 M8X30 A4-70	SECHSKANTSCHRAUBE		

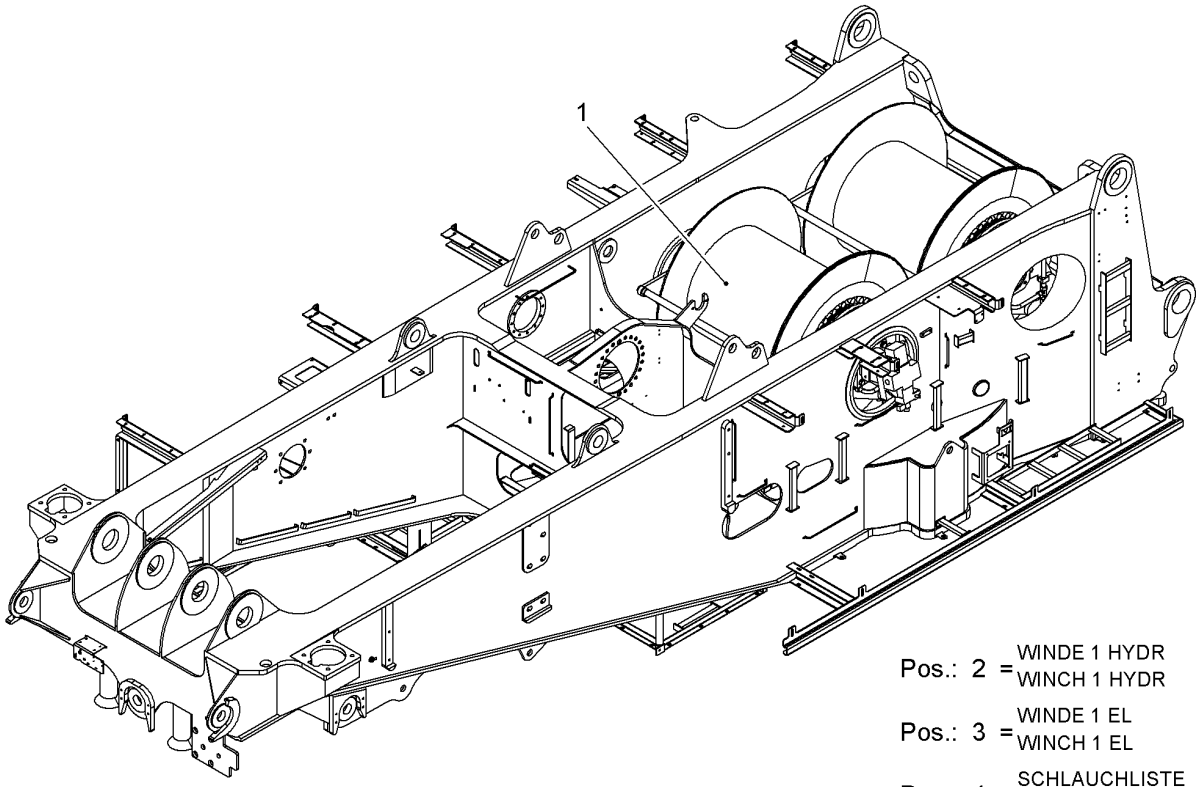

Pos.	Item	Quantity	Description	Bezeichnung	Serie	K
1	11220500	1	WINCHES INSTALLATION ⇨ ❑ 424	WINDEN EINBAU		
2	11262606	1	WINCH 1 HYDR ⇨ ❑ 434	WINDE 1 HYDR		
3	11216342	1	WINCH 1 EL ⇨ ❑ 436	WINDE 1 EL		
4	11262609	1	HOSE LIST ⇨ ❑ 437	SCHLAUCHLISTE		

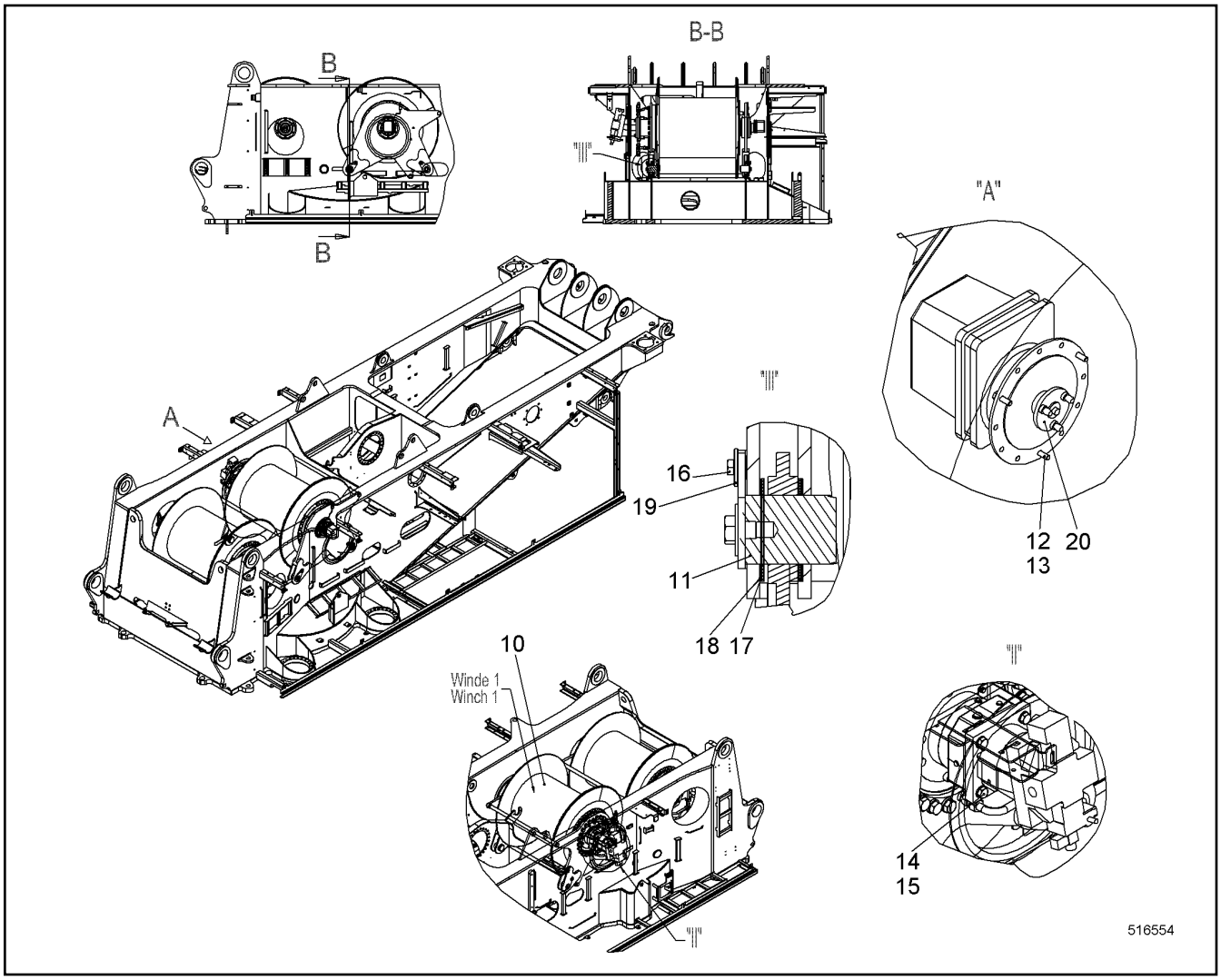

Pos.	Item	Quantity	Description	Bezeichnung	Serie	K
10	10530398	1	WINCH ⇨ ❑ 425	WINDE		
11	10574629	4	PIN CPL ⇨ ❑ 433	BOLZEN KPL		
12	420000414	3	WASHER ISO 7089 6 A4	SCHEIBE		
13	406532614	3	HEX SCREW ISO 4017 M6X20 A4-70	SECHSKANTSCHRAUBE		
14	10544174	4	WASHER ISO 7089 20	SCHEIBE		
15	10543924	4	HEX SCREW ISO 4017 M20X60 10.9	SECHSKANTSCHRAUBE		
16	406517314	4	HEX SCREW ISO 4017 M12X30 A4-70	SECHSKANTSCHRAUBE		
17	954432003	10	PLATE	BLECH		
18	954486503	6	PLATE	BLECH		
19	970726703	4	BUSHING 13/28X15 S355J2;EN 10025-2	BUCHSE		
20	606279014	1	DRIVE FLANGE	ANTRIEBSFLANSCH		

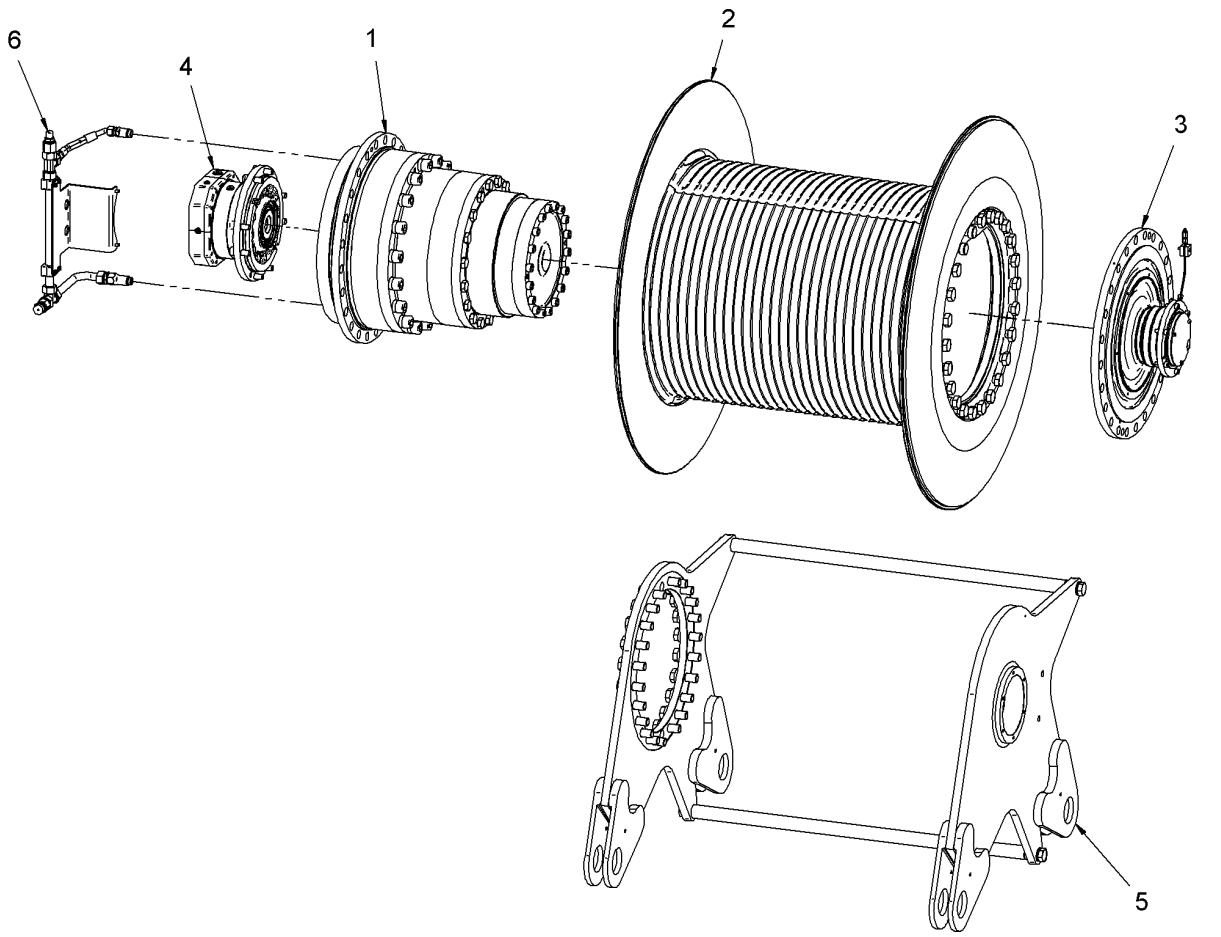

Pos.	Item	Quantity	Description	Bezeichnung	Serie	K
1	11893213	1	GEARBOX ⇨ ❑ 426	GETRIEBE		
2	11231269	1	ROPE DRUM ⇨ ❑ 428	SEILTROMMEL		
3	11231270	1	FLANGE BEARING ⇨ ❑ 429	FLANSCHLAGER		
4	11893214	1	DRIVE ⇨ ❑ 430	ANTRIEB		
5	11893215	1	WINCH TRESTLE ⇨ ❑ 431	WINDENBOCK		
6	11893216	1	OIL LINE ⇨ ❑ 432	OELLEITUNG		

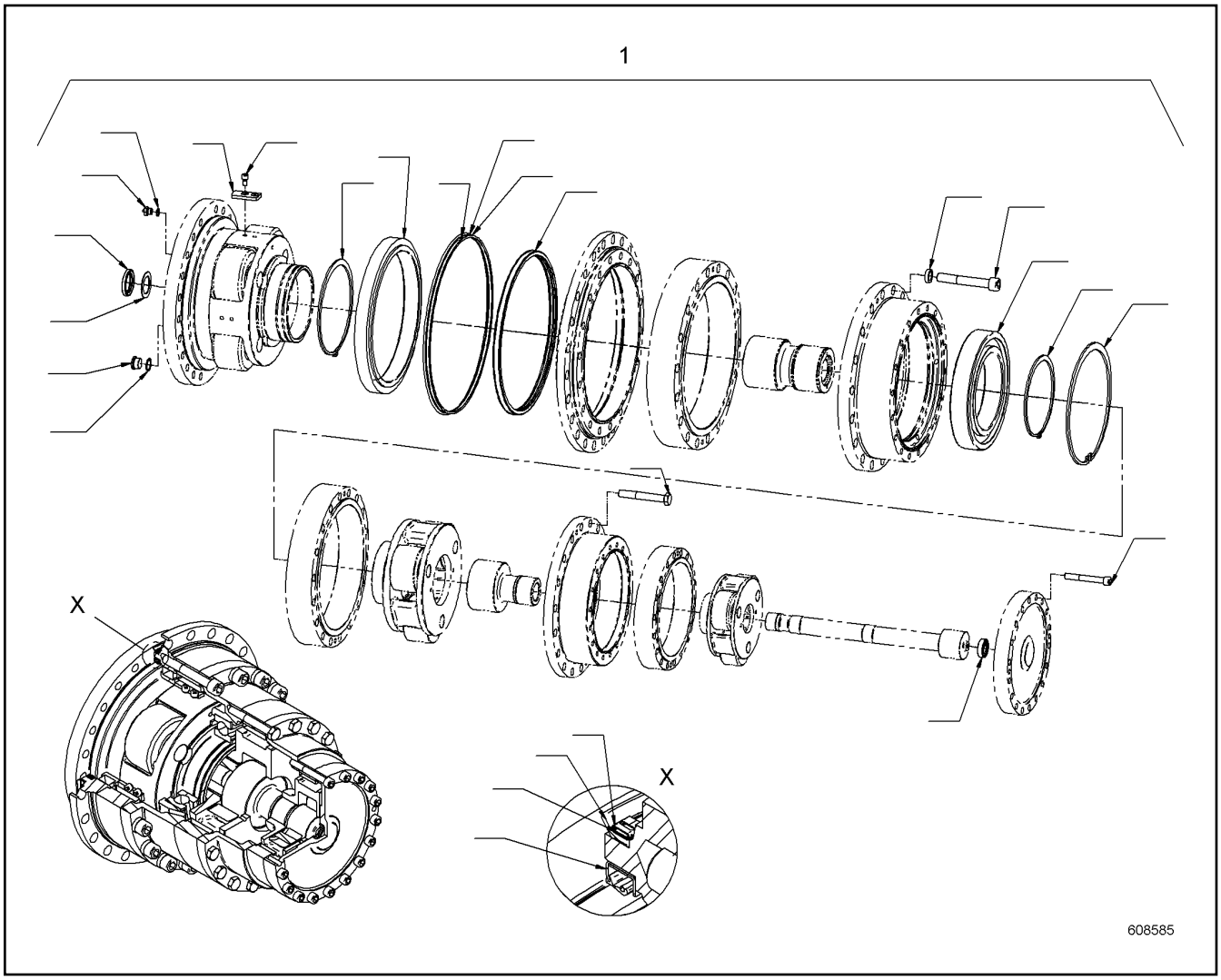

Pos.	Item	Quantity	Description	Bezeichnung	Serie	K
1	11893228	1	REPAIR KIT ⇨ ❑ 427	REPARATURSATZ		

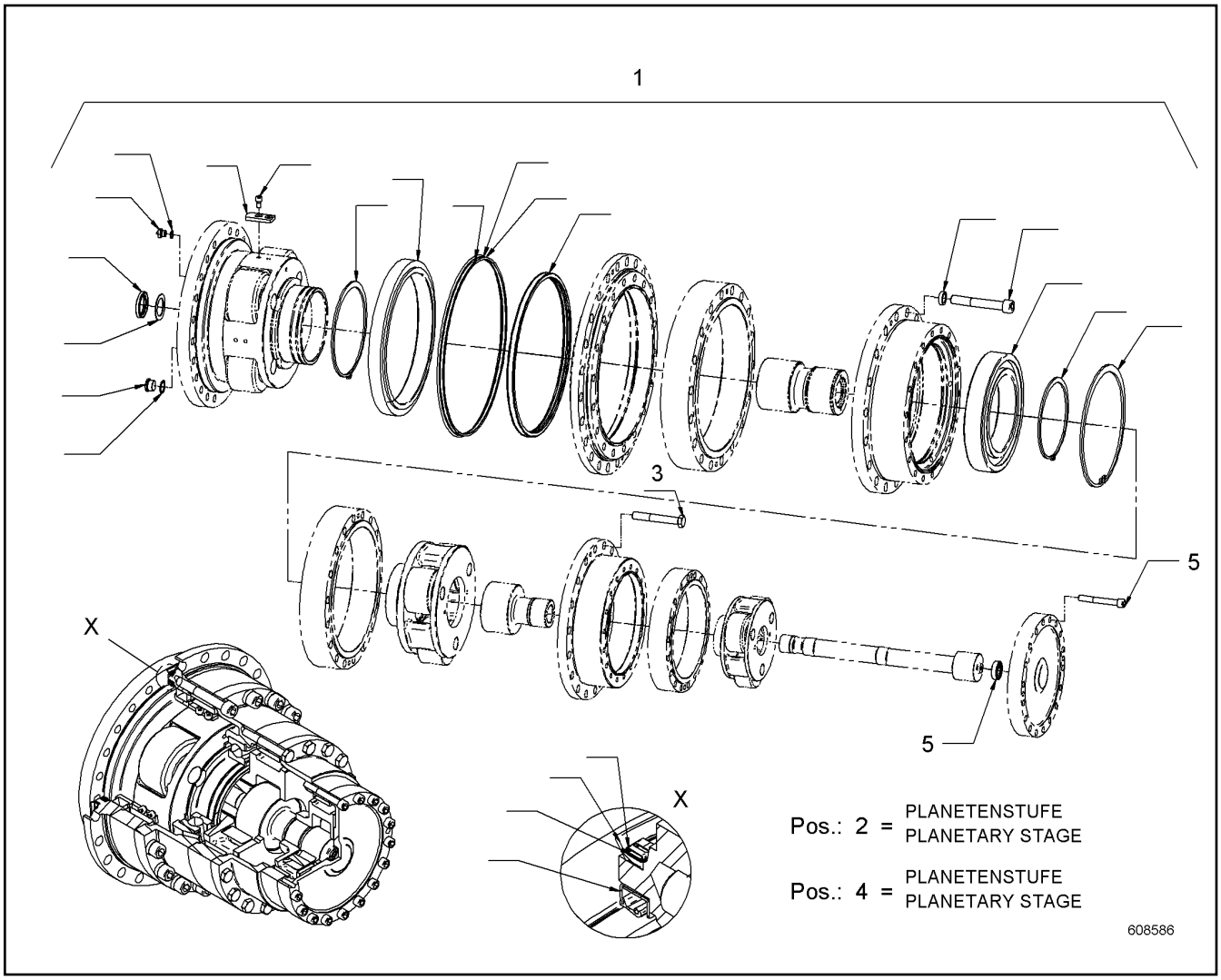

Pos.	Item	Quantity	Description	Bezeichnung	Serie	K
1	11233487	1	REPAIR KIT	REPARATURSATZ		
2	11893250	1	PLANETARY STAGE	PLANETENSTUFE		
3	11231317	1	REPAIR KIT	REPARATURSATZ		
4	11893252	1	PLANETARY STAGE	PLANETENSTUFE		
5	11231319	1	REPAIR KIT	REPARATURSATZ		

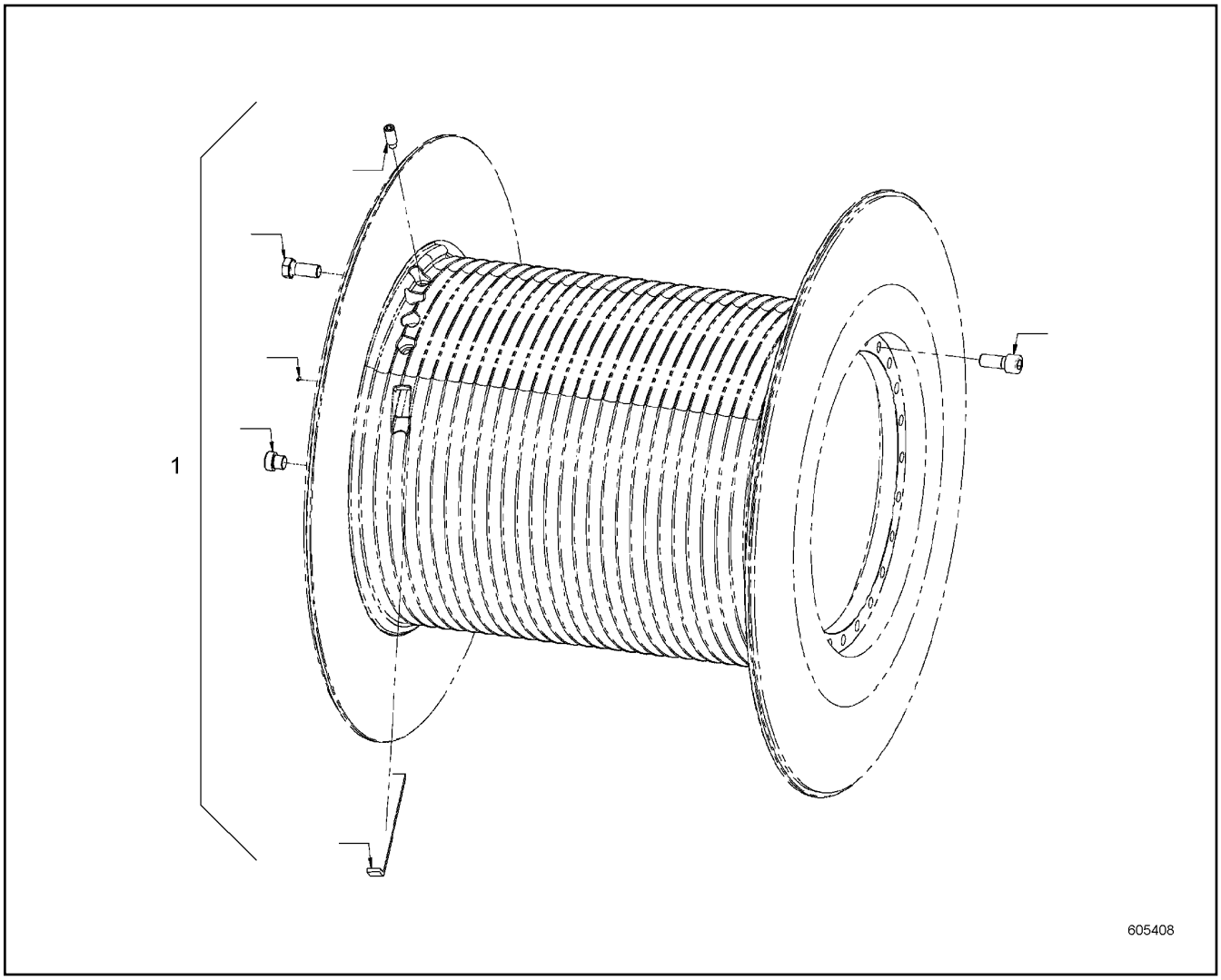

Pos.	Item	Quantity	Description	Bezeichnung	Serie	K
1	11231322	1	REPAIR KIT	REPARATURSATZ		

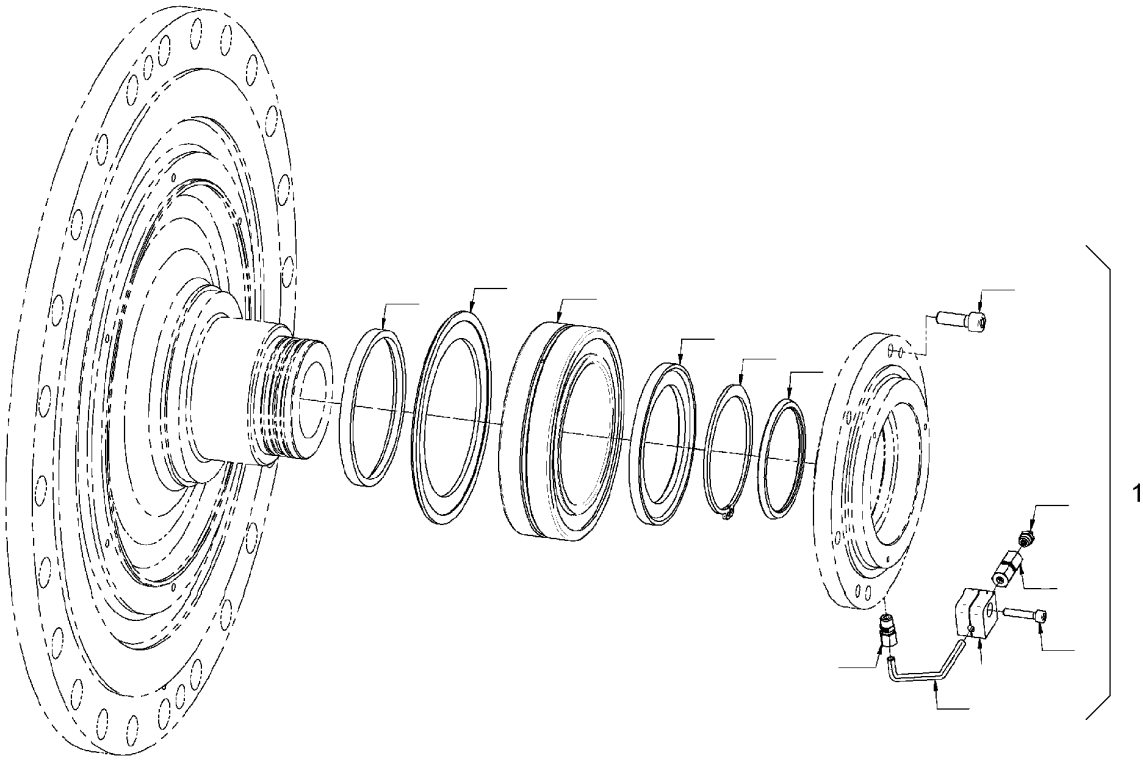

Pos.	Item	Quantity	Description	Bezeichnung	Serie	K
1	11231336	1	REPAIR KIT	REPARATURSATZ		

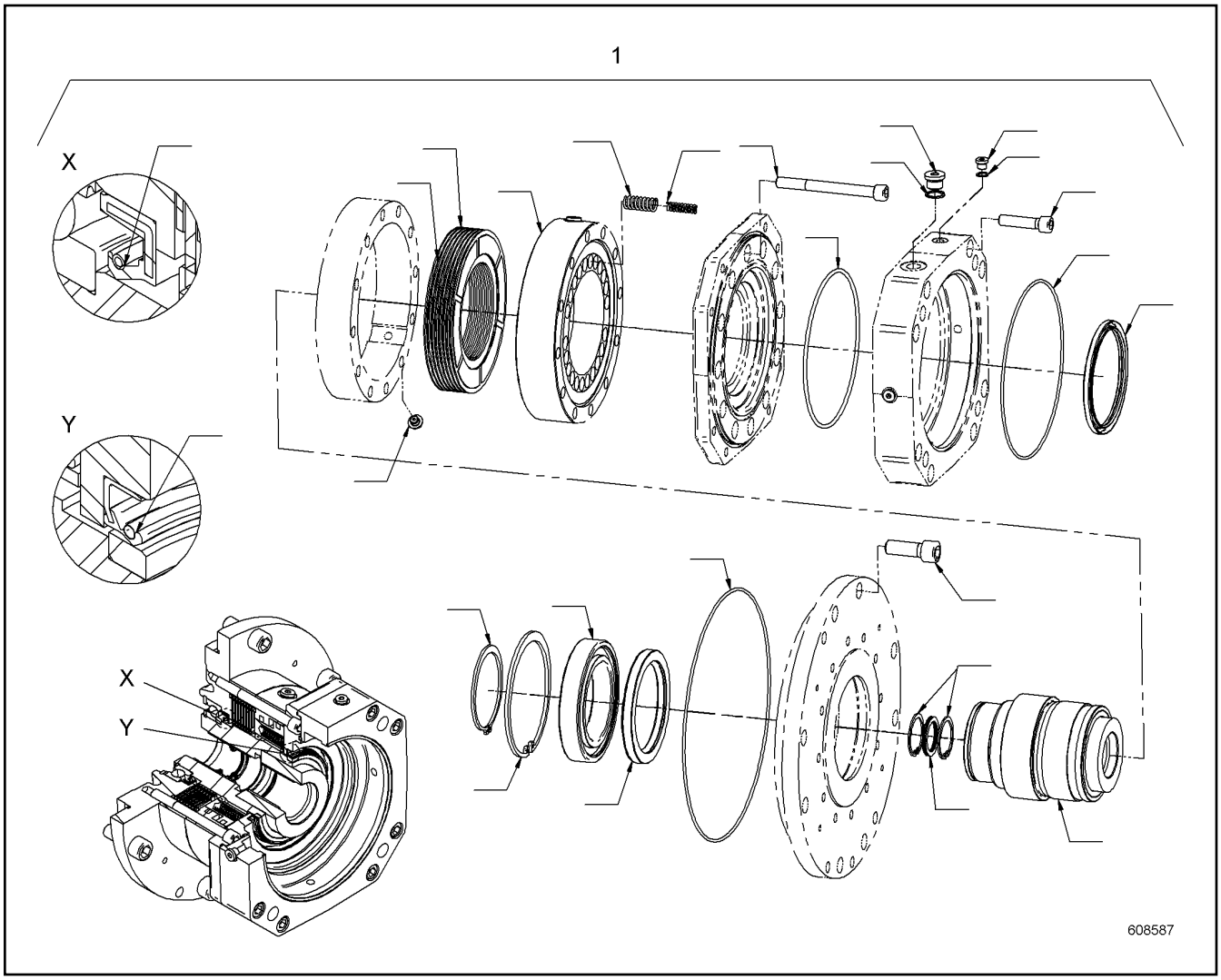

Pos.	Item	Quantity	Description	Bezeichnung	Serie	K
1	11893253	1	REPAIR SET DRIVE	RS ANTRIEB		

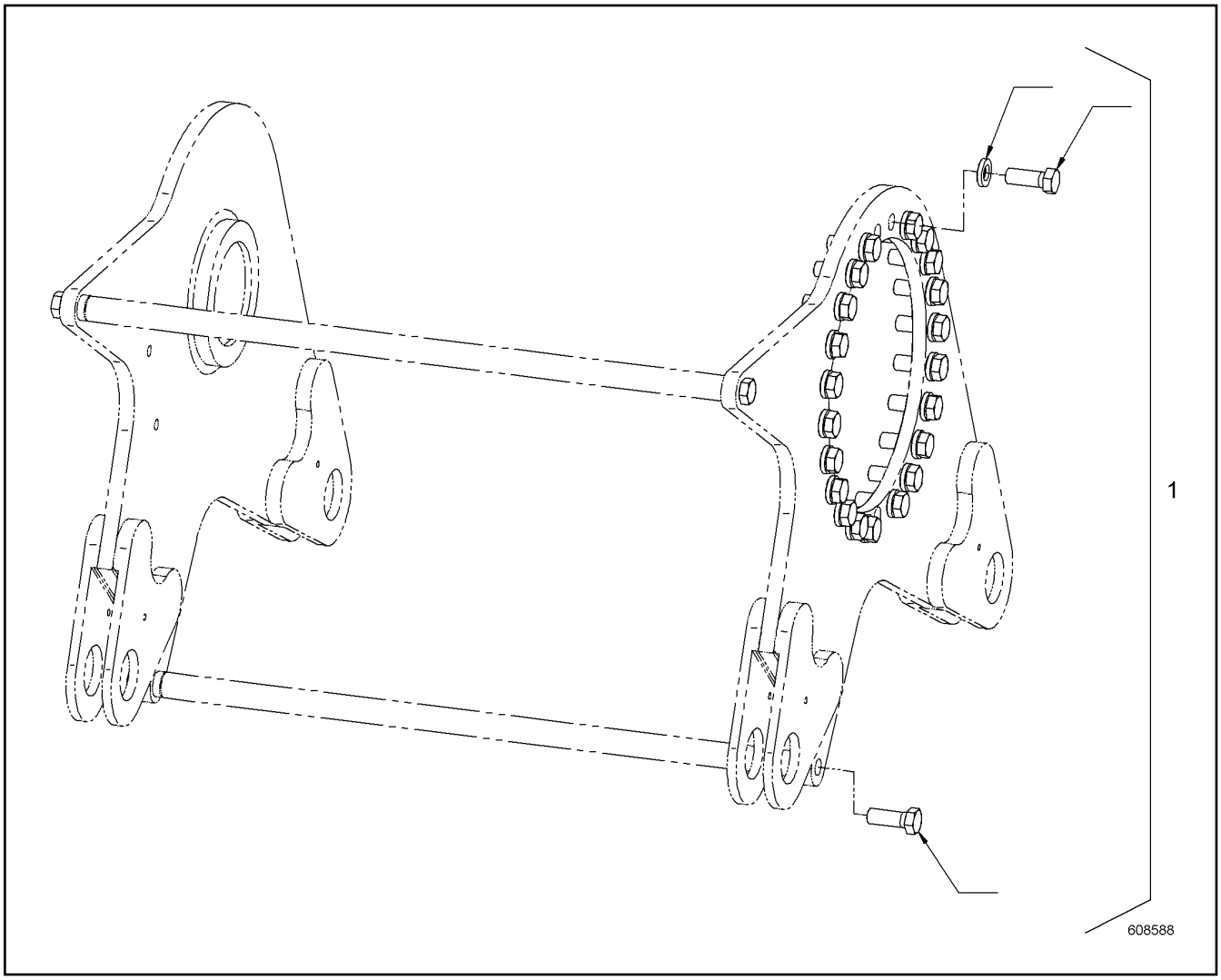

Pos.	Item	Quantity	Description	Bezeichnung	Serie	K
1	11893254	1	REPAIR KIT	REPARATURSATZ		

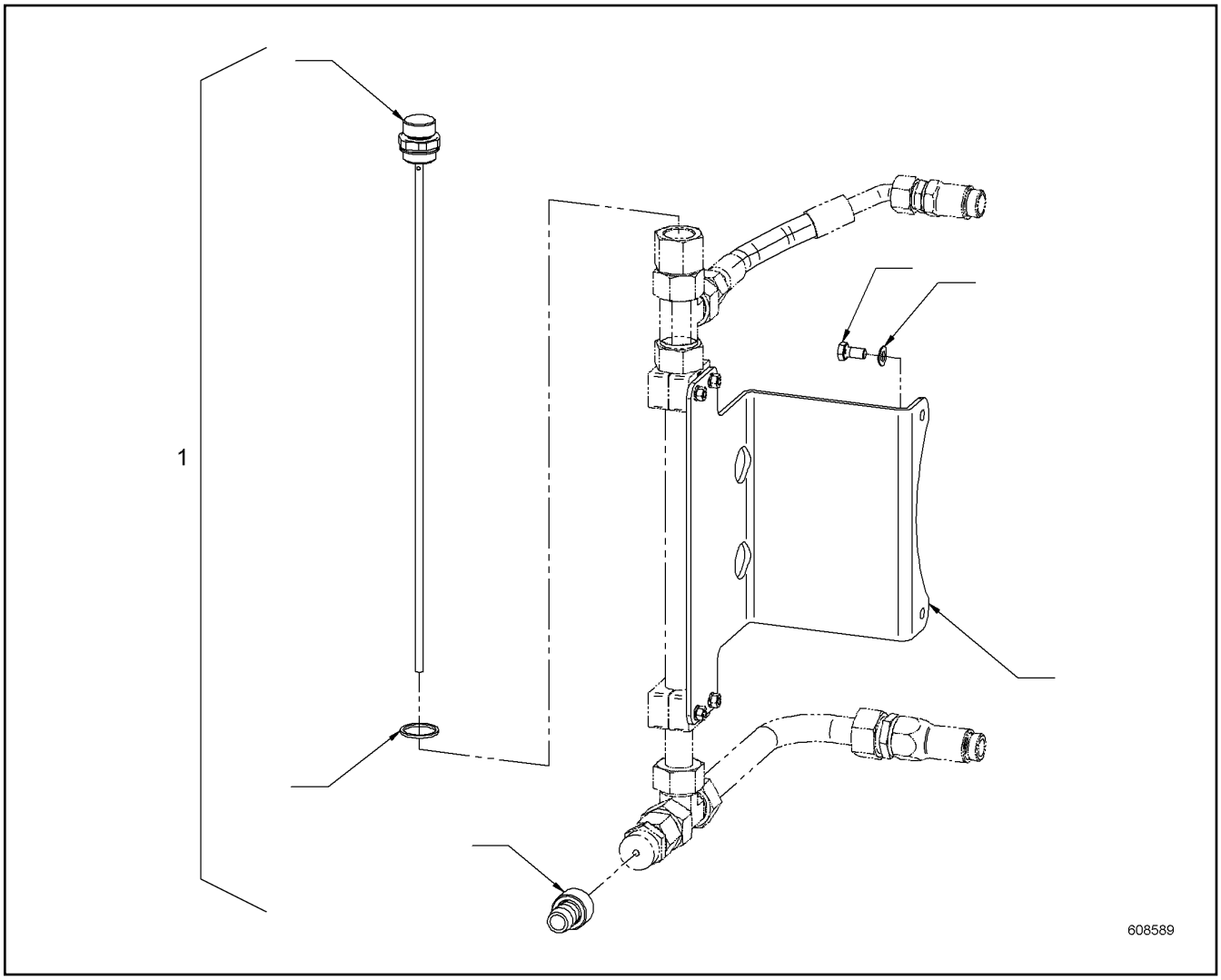

Pos.	Item	Quantity	Description	Bezeichnung	Serie	K
1	11893255	1	REPAIR KIT	REPARATURSATZ		

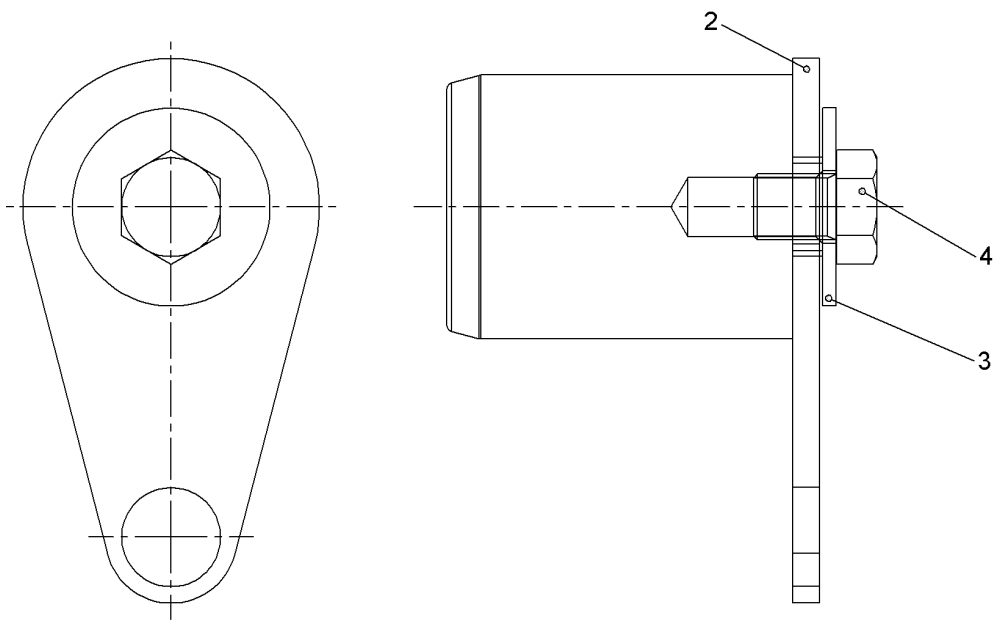

Pos.	Item	Quantity	Description	Bezeichnung	Serie	K
1	10574630	1	PIN	BOLZEN		
2	10574631	1	WP	WP		
3	10544175	1	WASHER ISO 7093-1 20	SCHEIBE		
4	10543917	1	HEX SCREW ISO 4017 M20X25 10.9	SECHSKANTSCHRAUBE		

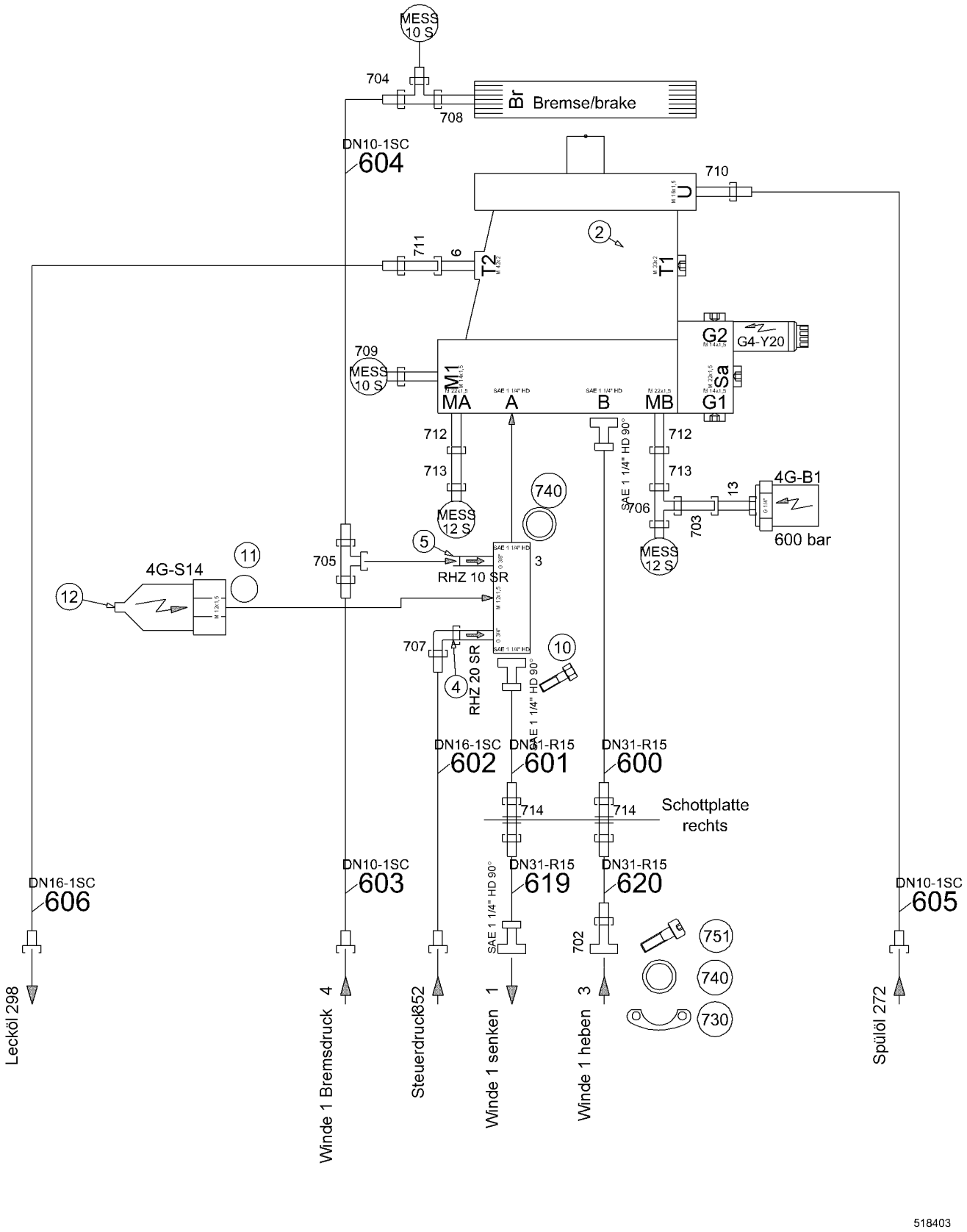
MESS 10 S
704
Br
Bremse/brake
708
DN10-1SC
604
710
U
2
711
6
T2
T1
G2
G4-Y20
709
MESS 10 S
M1
Sa
MA
A
B
MB
G1
712
713
740
MESS 12 S
SAE 1 1/4" HD 90°
712
713
706
703
13
4G-B1
600 bar
MESS 12 S
5
705
RHZ 10 SR
3
11
4G-S14
12
707
4
RHZ 20 SR
10
SAE 1 1/4" HD 90°
DN16-1SC
602
DN31-R15
601
DN31-R15
600
714
714
Schottplatte
rechts
DN16-1SC
606
DN10-1SC
603
DN31-R15
619
DN31-R15
620
DN10-1SC
605
SAE 1 1/4" HD 90°
702
751
740
730
Leckö1 298
4
Winde 1 Bremsdruck
852
Steuerdruck
1
Winde 1 senken
3
Winde 1 heben
Spülö1 272
518403

Pos.	Item	Quantity	Description	Bezeichnung	Serie	K
2	11251232	1	VARIABLE DISPLACEMENT MOTOR	V.MOTOR		
4	510493714	1	NON-RETURN VALVE	RUECKSCHLAGVENTIL		
5	511458814	1	NON-RETURN VALVE	RUECKSCHLAGVENTIL		
10	10539307	4	HEX SCREW ISO 4017 M14X90 10.9	SECHSKANTSCHRAUBE		
11	710069314	1	SEALING RING	DICHTRING		
12	10352119	1	PRESSURE SWITCH ON	DRUCKSCHALTER EINSCHALTE		
13	289031614	1	SPECIAL THREADED UNION	SONDERVERSCHRAUBUNG		
700	510694514	2	GAUGE CONNECTION	MESSSTUTZEN		
701	510664814	2	GAUGE CONNECTION	MESSSTUTZEN		
702	510702414	1	FLANGE JOINT	VERSCHRAUBUNG		
703	481930514	1	FLANGE JOINT	VERSCHRAUBUNG		
704	7367776	1	FLANGE JOINT	VERSCHRAUBUNG		
705	482431314	1	FLANGE JOINT	VERSCHRAUBUNG		
706	482431414	1	FLANGE JOINT	VERSCHRAUBUNG		
707	7407108	1	FLANGE JOINT	VERSCHRAUBUNG		
708	471004614	1	FLANGE JOINT	VERSCHRAUBUNG		
709	471008214	1	FLANGE JOINT	VERSCHRAUBUNG		
710	471030708	1	FLANGE JOINT	VERSCHRAUBUNG		
711	247009702	1	FLANGE JOINT	VERSCHRAUBUNG		
712	7622060	2	FLANGE JOINT	VERSCHRAUBUNG		
713	485433314	2	FLANGE JOINT	VERSCHRAUBUNG		
714	474033014	2	FLANGE JOINT	VERSCHRAUBUNG		
730	510586614	8	FLANGE HALF	FLANSCHHAELFTE		
740	10472425	5	PLAIN COMPRESSION RING	RECHTECKRING		
750	10539300	8	HEX SCREW ISO 4017 M14X45 10.9	SECHSKANTSCHRAUBE		
751	10544044	4	SOCKET HEAD SCREW ISO 4762 M14X45 10.9	ZYLINDERSCHRAUBE		

OHNE BILD
WITHOUT ILLUSTRATION
SANS PLANCHE
SIN FIG.
SEM ILUSTRAÇÃO
БЕЗ ИЗОБРАЖЕНИЯ

600000

Pos.	Item	Quantity	Description	Bezeichnung	Serie	K
1	606279214	1	GEAR CAM LIMITSWITCH	GETRIEBENOCKENENDSCHALTE		

ACHTUNG !
ATTENTION !
ATTENTION !
ATENCIÓN !
ATENÇÃO !
ВНИМАНИЕ

Für Schlauchbestellungen kann über die Schlauchnummer, in der entsprechenden Schlauchliste, die Identnummer festgestellt werden.

For ordering flexible hoses you can find the identification number through the hose-number in the corresponding hose-list.

Pour des ordres de tuyau flexible le nombre d'identification on voit dans la liste de tuyau flexible correspondente.

Para el pedido de manguera, indicar el número de identificación de la manguera de la lista respectiva.

Para se encomendar uma mangueira, consulte o número de identificaçao na respectiva lista de mangueiras.

Для оформления заказов на шланги/рукавы идент. № может быть определен при помощи номера шланга/рукава, указанного в соотетствующем перечне шлангов/рукавов.

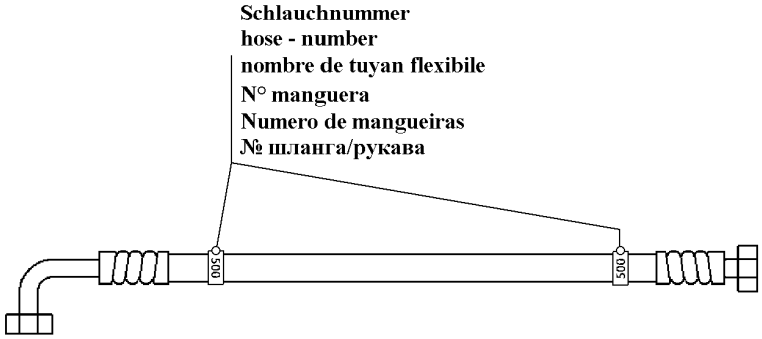

500000

Pos.	Item	Quantity	Description	Bezeichnung	Serie	K
600	995943114	1	HOSE CPL	SCHLAUCH KPL		
602	991391814	1	HOSE CPL	SCHLAUCH KPL		
604	992511514	1	HOSE CPL	SCHLAUCH KPL		
605	911108414	1	HOSE CPL	SCHLAUCH KPL		
606	928536514	1	HOSE CPL	SCHLAUCH KPL		
619	995943514	1	HOSE CPL	SCHLAUCH KPL		
620	995943614	1	HOSE CPL	SCHLAUCH KPL		

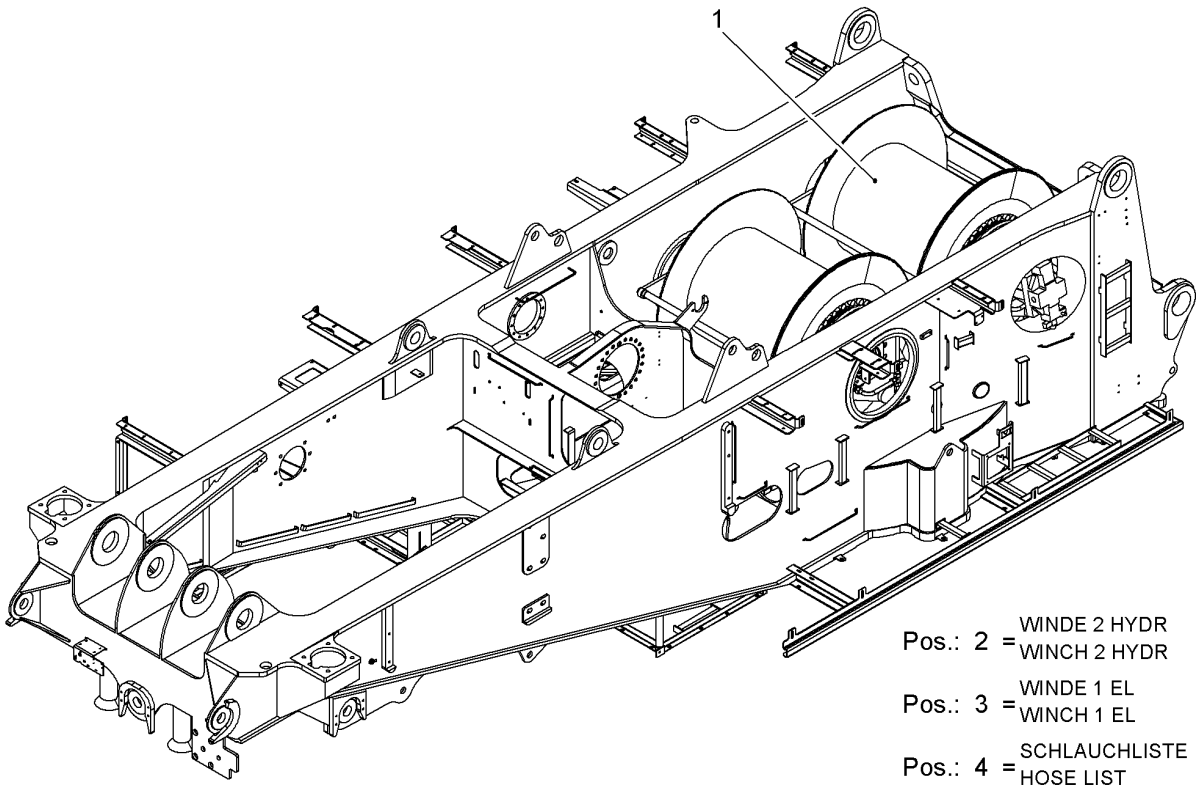

Pos.	Item	Quantity	Description	Bezeichnung	Serie	K
1	11220501	1	WINCHES INSTALLATION ⇨ ❑ 439	WINDEN EINBAU		
2	11262611	1	WINCH 2 HYDR ⇨ ❑ 440	WINDE 2 HYDR		
3	11216342	1	WINCH 1 EL ⇨ ❑ 436	WINDE 1 EL		
4	11262612	1	HOSE LIST ⇨ ❑ 442	SCHLAUCHLISTE		

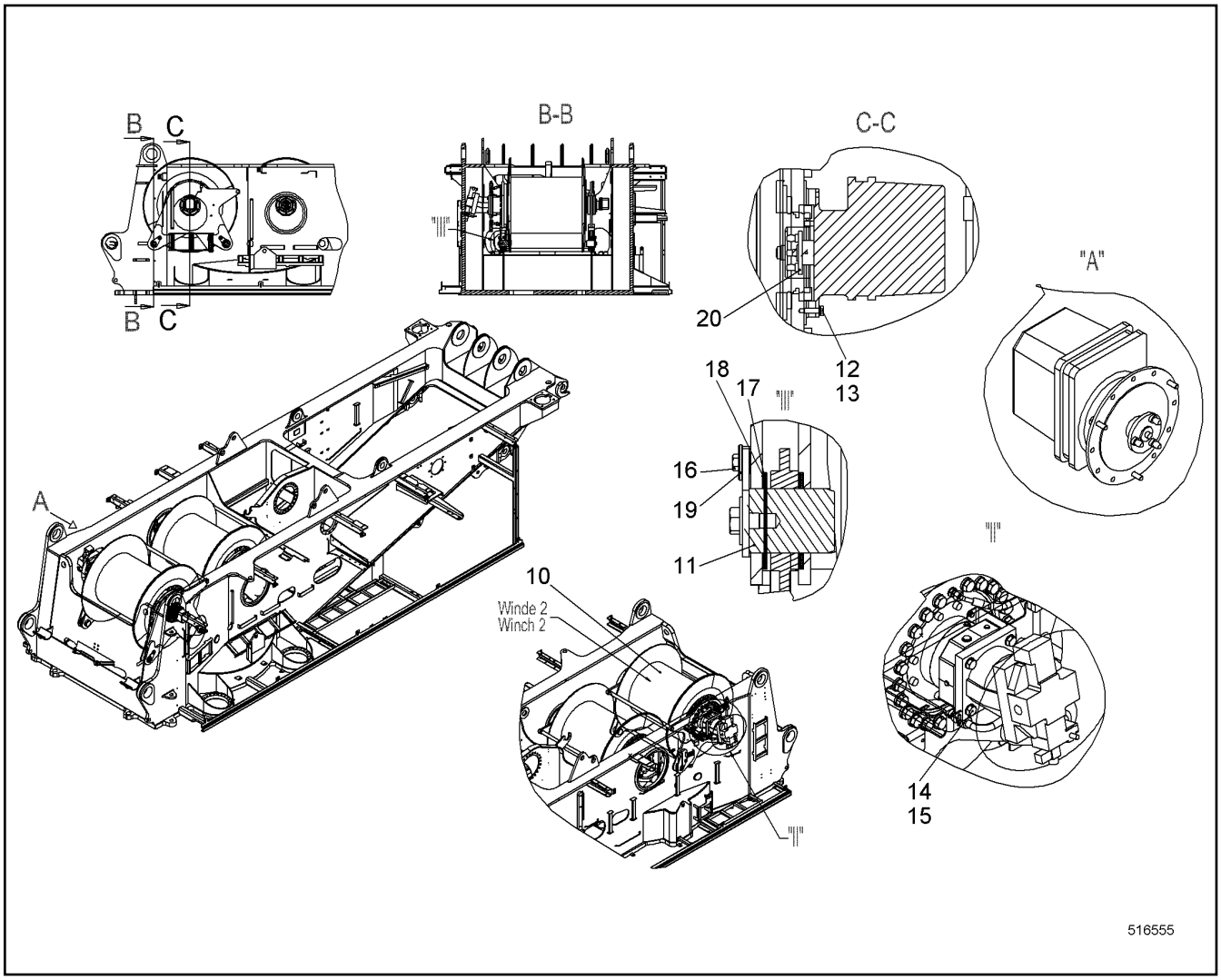

Pos.	Item	Quantity	Description	Bezeichnung	Serie	K
10	10530398	1	WINCH ⇨ ❑ 425	WINDE		
11	10574629	4	PIN CPL ⇨ ❑ 433	BOLZEN KPL		
12	420000414	3	WASHER ISO 7089 6 A4	SCHEIBE		
13	406532614	3	HEX SCREW ISO 4017 M6X20 A4-70	SECHSKANTSCHRAUBE		
14	10544174	4	WASHER ISO 7089 20	SCHEIBE		
15	10543924	4	HEX SCREW ISO 4017 M20X60 10.9	SECHSKANTSCHRAUBE		
16	406517314	4	HEX SCREW ISO 4017 M12X30 A4-70	SECHSKANTSCHRAUBE		
17	954432003	10	PLATE	BLECH		
18	954486503	6	PLATE	BLECH		
19	970726703	4	BUSHING 13/28X15 S355J2;EN 10025-2	BUCHSE		
20	606279014	1	DRIVE FLANGE	ANTRIEBSFLANSCH		

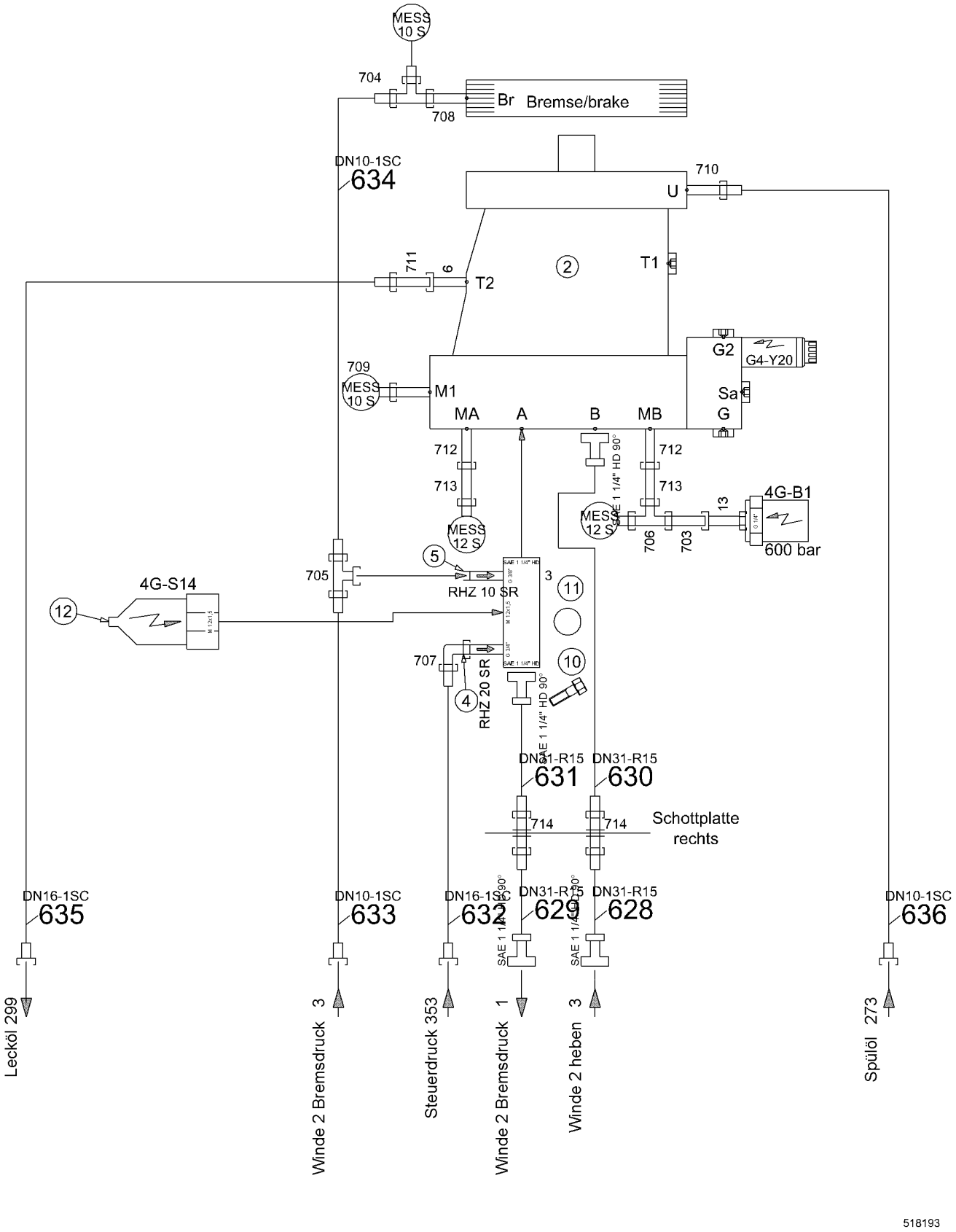
MESS 10 S
704
708
Br
Bremse/brake
DN10-1SC
634
710
U
711
6
T2
2
T1
709
MESS 10 S
M1
G2
G4-Y20
Sa
G
MA
A
B
MB
712
713
712
713
SAE 1 1/4" HD 90°
MESS 12 S
706
703
13
4G-B1
600 bar
5
705
RHZ 10 SR
3
11
4G-S14
12
707
4
RHZ 20 SR
10
SAE 1 1/4" HD 90°
DN31-R15
631
DN31-R15
630
714
714
Schottplatte
rechts
DN16-1SC
635
DN10-1SC
633
DN16-1SC
632
DN31-R15
629
DN31-R15
628
DN10-1SC
636
Lecköl 299
3
Winde 2 Bremsdruck
Steuerdruck 353
1
Winde 2 Bremsdruck
3
Winde 2 heben
Spülöl 273
518193

Pos.	Item	Quantity	Description	Bezeichnung	Serie	K
2	11251232	1	VARIABLE DISPLACEMENT MOTOR	V.MOTOR		
4	510493714	1	NON-RETURN VALVE	RUECKSCHLAGVENTIL		
5	511458814	1	NON-RETURN VALVE	RUECKSCHLAGVENTIL		
10	10539307	4	HEX SCREW ISO 4017 M14X90 10.9	SECHSKANTSCHRAUBE		
11	710069314	1	SEALING RING	DICHTRING		
12	10352119	1	PRESSURE SWITCH ON	DRUCKSCHALTER EINSCHALTE		
13	289031614	1	SPECIAL THREADED UNION	SONDERVERSCHRAUBUNG		
700	510694514	2	GAUGE CONNECTION	MESSSTUTZEN		
701	510664814	2	GAUGE CONNECTION	MESSSTUTZEN		
703	481930514	1	FLANGE JOINT	VERSCHRAUBUNG		
704	7367776	1	FLANGE JOINT	VERSCHRAUBUNG		
705	482431314	1	FLANGE JOINT	VERSCHRAUBUNG		
706	482431414	1	FLANGE JOINT	VERSCHRAUBUNG		
707	7407108	1	FLANGE JOINT	VERSCHRAUBUNG		
708	471004614	1	FLANGE JOINT	VERSCHRAUBUNG		
709	471008214	1	FLANGE JOINT	VERSCHRAUBUNG		
710	471030708	1	FLANGE JOINT	VERSCHRAUBUNG		
711	247009702	1	FLANGE JOINT	VERSCHRAUBUNG		
712	7622060	2	FLANGE JOINT	VERSCHRAUBUNG		
713	485433314	2	FLANGE JOINT	VERSCHRAUBUNG		
714	474033014	2	FLANGE JOINT	VERSCHRAUBUNG		
730	510586614	8	FLANGE HALF	FLANSCHHAELFTE		
740	10472425	5	PLAIN COMPRESSION RING	RECHTECKRING		
750	10539300	16	HEX SCREW ISO 4017 M14X45 10.9	SECHSKANTSCHRAUBE		

ACHTUNG !
ATTENTION !
ATTENTION !
ATENCIÓN !
ATENÇÃO !
ВНИМАНИЕ

Für Schlauchbestellungen kann über die Schlauchnummer, in der entsprechenden Schlauchliste, die Identnummer festgestellt werden.

For ordering flexible hoses you can find the identification number through the hose-number in the corresponding hose-list.

Pour des ordres de tuyau flexible le nombre d'identification on voit dans la liste de tuyau flexible correspondente.

Para el pedido de manguera, indicar el número de identificación de la manguera de la lista respectiva.

Para se encomendar uma mangueira, consulte o número de identificaçao na respectiva lista de mangueiras.

Для оформления заказов на шланги/рукавы идент. № может быть определен при помощи номера шланга/рукава, указанного в соотетствующем перечне шлангов/рукавов.

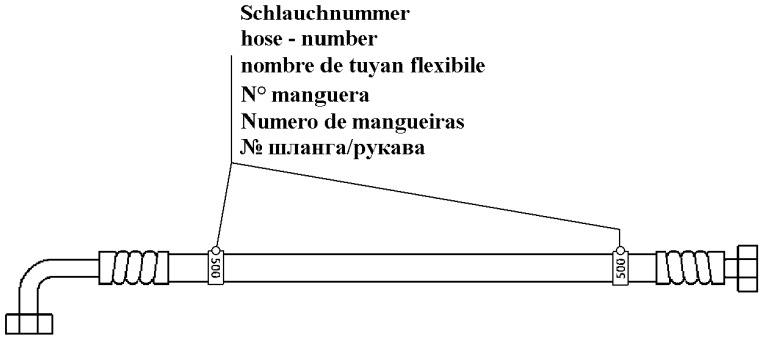

500000

Pos.	Item	Quantity	Description	Bezeichnung	Serie	K
628	995943714	1	HOSE CPL	SCHLAUCH KPL		
629	995943814	1	HOSE CPL	SCHLAUCH KPL		
630	995991314	1	HOSE CPL	SCHLAUCH KPL		
631	995944014	1	HOSE CPL	SCHLAUCH KPL		
632	995944114	1	HOSE CPL	SCHLAUCH KPL		
633	993685614	1	HOSE CPL	SCHLAUCH KPL		
634	992879314	1	HOSE CPL	SCHLAUCH KPL		
635	919757114	1	HOSE CPL	SCHLAUCH KPL		
636	994905314	1	HOSE CPL	SCHLAUCH KPL		

OHNE BILD
WITHOUT ILLUSTRATION
SANS PLANCHE
SIN FIG.
SEM ILUSTRAÇÃO
БЕЗ ИЗОБРАЖЕНИЯ

600000

Pos.	Item	Quantity	Description	Bezeichnung	Serie	K
1	10561838	1	TOOL ⇨ ❑ 444	WERKZEUG		
29	919023914	1	CABLE HYDR ⇨ ❑ 445	LEITUNG HYDR		
31	917665814	1	DRAIN HOSE CPL ⇨ ❑ 447	ABLASSSCHLAUCH KPL		
45	885392414	1	EXTENSION 1 " X 410MM	VERLAENGERUNG		
50	885391814	1	CROSS HANDLE 1 "	QUERGRIFF		
55	885380314	1	WRENCH SOCKET 36 X 1 "	STECKNUSS		
90	602707214	1	CABLE SOCK	KABELSTRUMPF		
91	602707414	1	CABLE SOCK	KABELSTRUMPF		
92	10222935	2	ROUND SLING	RUNDSCHLINGE		
93	790269114	1	ROUND SLING	RUNDSCHLINGE		
94	773954514	2	SHACKLE	SCHAEKEL		

OHNE BILD
WITHOUT ILLUSTRATION
SANS PLANCHE
SIN FIG.
SEM ILUSTRAÇÃO
БЕЗ ИЗОБРАЖЕНИЯ

600000

Pos.	Item	Quantity	Description	Bezeichnung	Serie	K
1	10560228	1	TOOL	WERKZEUG		
2	790042514	1	TOOL BOX	WERKZEUGKASTEN		
4	885602114	1	HAND LEVER PRESS 400B	HANDHEBELPRESSE		
5	790042214	1	HOSE LINE	SCHLAUCHLEITUNG		
6	790042914	1	HOSE LINE	SCHLAUCHLEITUNG		
7	750001114	1	PRESSURE GAUGE	MANOMETER		
8	750003414	1	PRESSURE GAUGE	MANOMETER		
9	7363730	2	PRESSURE GAUGE CONNECTION	MANOMETERANSCHLUSS		
10	510694314	2	PRESSUREGAUGE DIRECTCONNECTION	MANOMETERDIREKTANSCHLUS		
11	7002475	2	MEASURING HOSE	MESSSCHLAUCH		
12	790036914	1	CROWBAR 1200 MM	BRECHSTANGE		
13	885040114	1	SLEDGE HAMMER 5000G	VORSCHLAGHAMMER		
14	885400114	1	CROWBAR 600 MM	BRECHSTANGE		
15	789038114	1	LADDER	LEITER		
16	890045314	1	VARNISH SPRAY	LACKSPRAY		
17	890063714	1	VARNISH SPRAY	LACKSPRAY		
18	885045214	1	SOFT FACE HAMMER 60G	SCHONHAMMER		
19	773930114	1	SHACKLE	SCHAEKEL		

Pos.	Item	Quantity	Description	Bezeichnung	Serie	K
1	510682014	1	BALL VALVE	KUGELHAHN		
2	511704314	1	QUICK-FITTING THREAD COUPLING ⇨ ❑ 446	SCHNELLVERSCHRAUBUNGSK		
295	928815314	1	HOSE CPL	SCHLAUCH KPL		
700	470002414	1	FLANGE JOINT	VERSCHRAUBUNG		
701	471032808	1	FLANGE JOINT	VERSCHRAUBUNG		
702	477400314	1	FLANGE JOINT	VERSCHRAUBUNG		
703	477700414	1	FLANGE JOINT	VERSCHRAUBUNG		
704	481930414	1	FLANGE JOINT	VERSCHRAUBUNG		
705	485433414	1	FLANGE JOINT	VERSCHRAUBUNG		

OHNE BILD
WITHOUT ILLUSTRATION
SANS PLANCHE
SIN FIG.
SEM ILUSTRAÇÃO
БЕЗ ИЗОБРАЖЕНИЯ

600000

Pos.	Item	Quantity	Description	Bezeichnung	Serie	K
1	511710214	1	SUPPORTING RING	STUETZRING		
2	726411614	1	O-RING	O-RING		
3	726464214	1	O-RING	O-RING		
4	7364488	1	SOCKET DUST-PROOF	STAUBMUFFE		

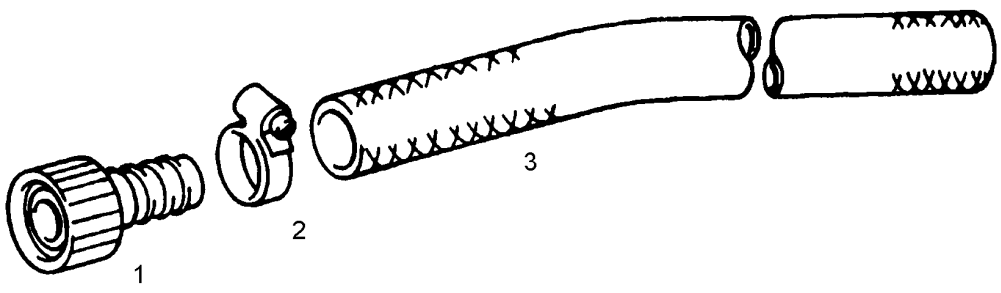

Pos.	Item	Quantity	Description	Bezeichnung	Serie	K
1	7402657	1	HOSE FITTING	SCHLAUCHARMATUR		
2	4900778	1	HOSE CLAMP	SCHLAUCHSCHELLE		
3	7362451	2.5	HOSE	SCHLAUCH		

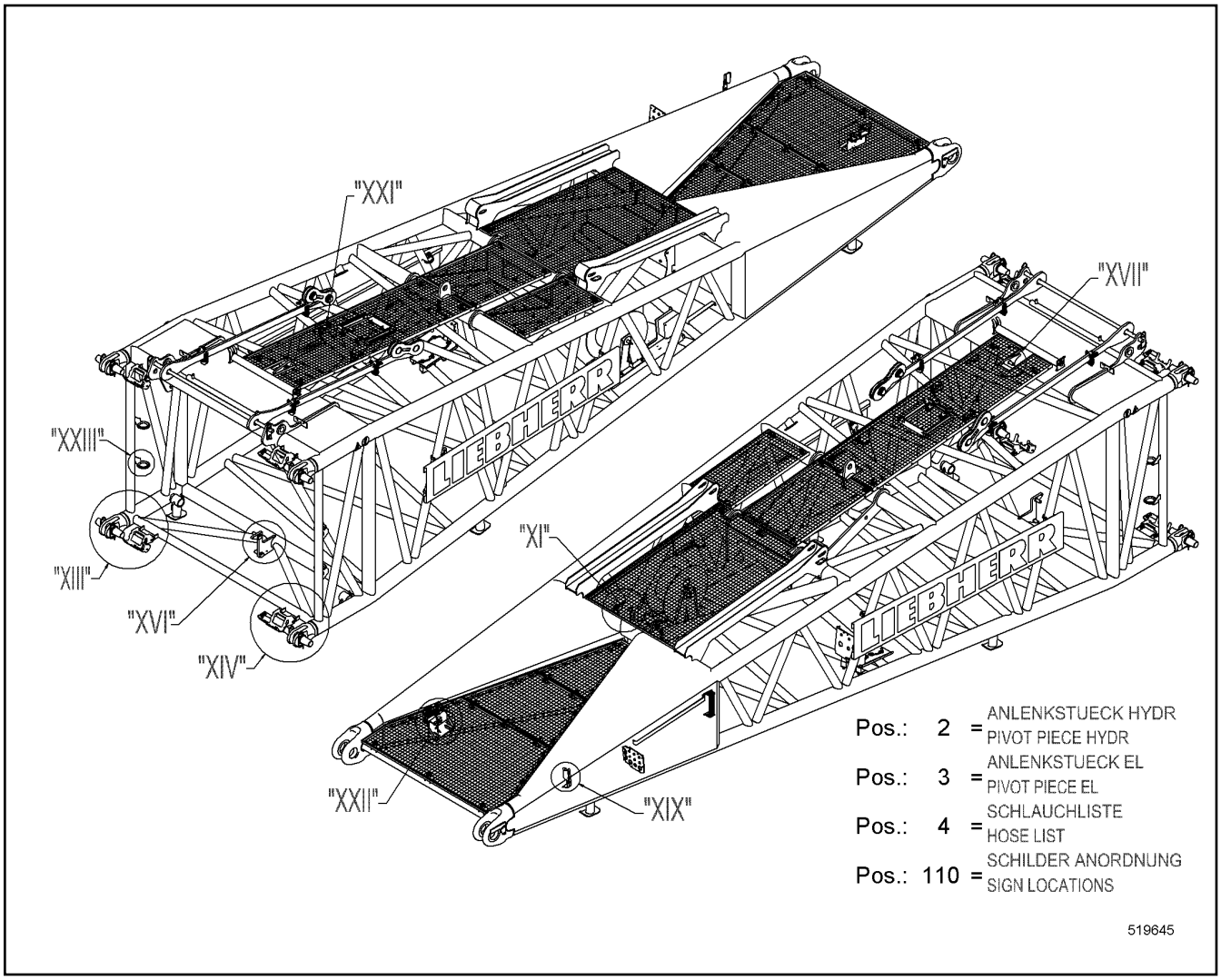

Pos.	Item	Quantity	Description	Bezeichnung	Serie	K
2	10518261	1	PIVOT PIECE HYDR ⇨ ❑ 452	ANLENKSTUECK HYDR		
3	10530446	1	PIVOT PIECE EL ⇨ ❑ 455	ANLENKSTUECK EL		
4	11232399	1	HOSE LIST ⇨ ❑ 458	SCHLAUCHLISTE		

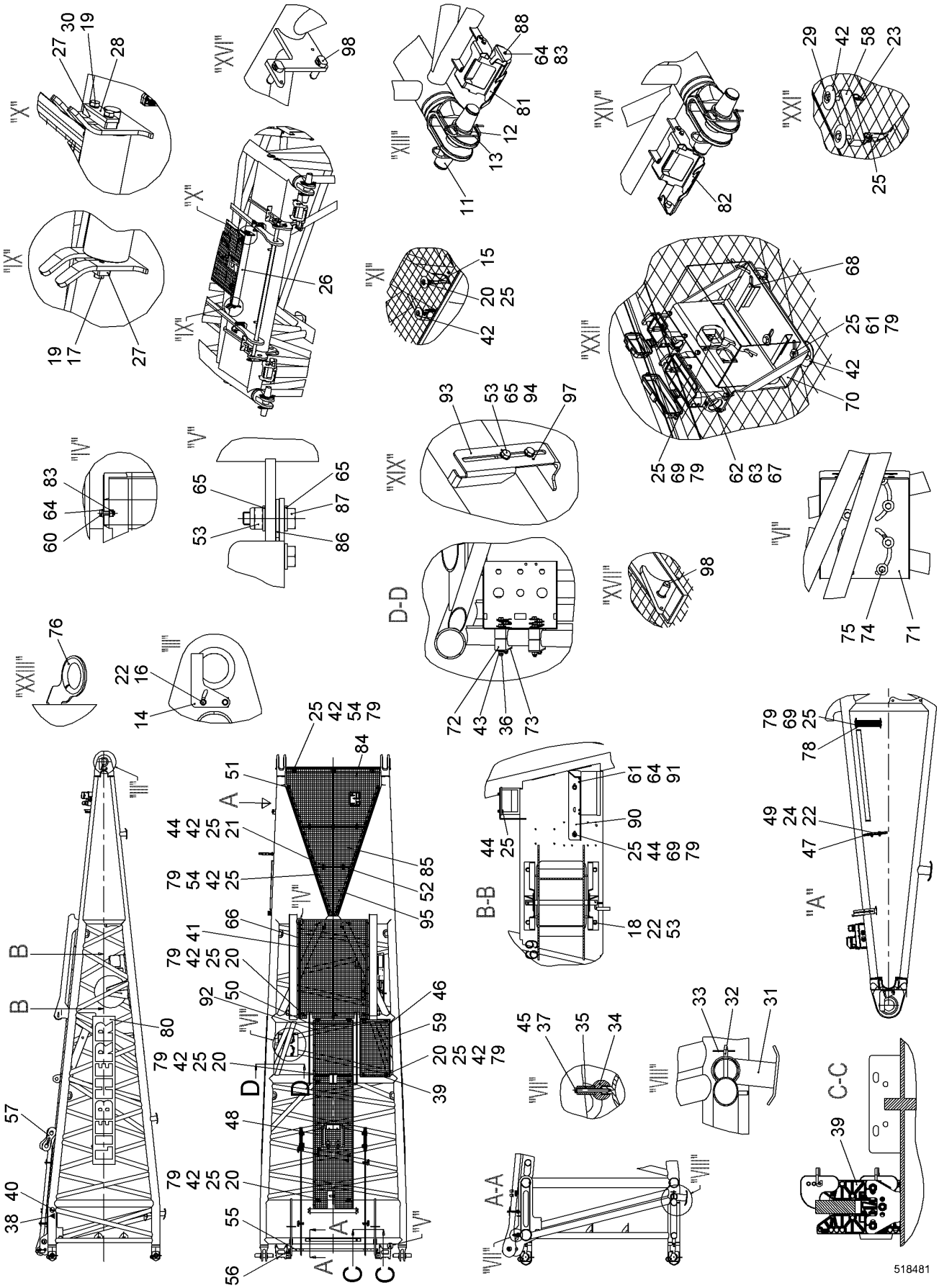

8.7.2015 518481	**138281_ETK_001**	449 (2/4)
LIEBHERR	**PIVOT PIECE CPL** **ANLENKSTUECK KPL**	**11 23 820 3**

Pos.	Item	Quantity	Description	Bezeichnung	Serie	K
11	950581614	4	PIN 80X371 LHRD900-40;10019758	BOLZEN		
12	421103814	8	WASHER DIN EN 28738 80 ST;	SCHEIBE		
13	433105008	8	RETAINING SPRING DIN 2194 6MM FS	SICHERUNGSFEDER		
14	970831503	2	WP	WP		
15	10531873	2	TIGHTENING STRAP HINGE PIN	GELENKBOLZENSPANNBAND		
16	406517314	4	HEX SCREW ISO 4017 M12X30 A4-70	SECHSKANTSCHRAUBE		
17	406518714	2	HEX SCREW ISO 4017 M10X20 A4-70	SECHSKANTSCHRAUBE		
18	406518414	4	HEX SCREW ISO 4017 M12X35 A4-70	SECHSKANTSCHRAUBE		
19	10536579	4	LOCK WASHER 10 254 SMO;EN 10088-3	SICHERUNGSSCHEIBE		
20	10331506	19	HEX SCREW ISO 4017 M8X55 A4-70	SECHSKANTSCHRAUBE		
21	406501314	10	HEX SCREW ISO 4017 M8X30 A4-70	SECHSKANTSCHRAUBE		
22	420001514	16	WASHER ISO 7089 12 A4	SCHEIBE		
23	10530689	2	TIGHTENING STRAP HINGE PIN	GELENKBOLZENSPANNBAND		
24	10540495	2	HEX NUT ISO 10511 M12 A4	SECHSKANTMUTTER		
25	10540493	64	HEX NUT ISO 10511 M8 A4	SECHSKANTMUTTER		
26	939662601	1	SAFETY ROLLER	SCHUTZWALZE		
27	956378214	2	AXLE HOLDER	ACHSHALTER		
28	703003014	1	AXLE HOLDER	ACHSHALTER		
29	10538812	4	HEX SCREW ISO 4017 M8X100 A4-70	SECHSKANTSCHRAUBE		
30	406511914	2	HEX SCREW ISO 4017 M10X25 A4-70	SECHSKANTSCHRAUBE		
31	990954814	2	FOOT ST.CONST.	FUSS SCHWK		
33	433206214	2	SPRING PLUG DIN 11024 4	FEDERSTECKER		
34	971303203	1	STRIP	LEISTE		
35	956009714	2	INTERMEDIATE PART	ZWISCHENSTUECK		
36	10544155	8	HEX NUT ISO 10511 M16 10	SECHSKANTMUTTER		
37	10538810	2	HEX SCREW ISO 4017 M8X90 A4-70	SECHSKANTSCHRAUBE		
38	10523125	2	SIGN	SCHILD		
39	773193414	1	SIGN	SCHILD		
40	773194314	2	SIGN	SCHILD		
41	11275747	1	GRATING	GITTERROST		
42	10098157	53	DISH	TELLER		
43	10544172	8	WASHER ISO 7089 16	SCHEIBE		
44	420001014	18	WASHER ISO 7089 8 A4	SCHEIBE		
45	10558857	2	LOCKING RING 8 A2	SICHERUNGSRING		
46	10222994	1	GRATING	GITTERROST		
47	10445043	1	BULKHEAD PLATE	SCHOTTPLATTE		
48	10581937	1	GRATING CPL ⇨ ❑ 459	GITTERROST KPL		
49	406511414	2	HEX SCREW ISO 4017 M12X40 A4-70	SECHSKANTSCHRAUBE		
50	10582020	2	U-STEEL	U-STAHL		
51	10581992	2	L-PROFILE	L-PROFIL		
53	10540494	22	HEX NUT ISO 10511 M10 A4	SECHSKANTMUTTER		
54	10538807	17	HEX SCREW ISO 4017 M8X50 A4-70	SECHSKANTSCHRAUBE		
55	289057714	1	TUBE	ROHR		
56	433102508	2	RETAINING SPRING 5MM	SICHERUNGSFEDER		
57	993006014	1	ANCHORING ROD CPL ⇨ ❑ 460	HALTESTANGE KPL		
58	10589204	2	SHEET	PLATTE		
59	10222995	2	U-STEEL	U-STAHL		
60	406532614	24	HEX SCREW ISO 4017 M6X20 A4-70	SECHSKANTSCHRAUBE		
61	406508014	3	HEX SCREW ISO 4017 M8X45 A4-70	SECHSKANTSCHRAUBE		
62	406501814	8	HEX SCREW ISO 4017 M5X20 A4-70	SECHSKANTSCHRAUBE		
63	420005214	16	WASHER ISO 7089 5 A4	SCHEIBE		
64	420000414	56	WASHER ISO 7089 6 A4	SCHEIBE		
65	420001114	36	WASHER ISO 7089 10 A4	SCHEIBE		
67	10540484	8	HEX NUT ISO 10511 M5 A4	SECHSKANTMUTTER		
68	10540082	2	RUBBER	GUMMI		
69	406501414	11	HEX SCREW ISO 4017 M8X25 A4-70	SECHSKANTSCHRAUBE		
70	11218236	1	HOLDER	HALTER		
72	602017114	4	CLAMP-HALF	KLEMMHAELFTE		

Pos.	Item	Quantity	Description	Bezeichnung	Serie	K
73	602016514	4	LID PLATE	DECKPLATTE		
74	10544173	8	WASHER ISO 7093-1 16	SCHEIBE		
75	10543975	8	HEX SCREW ISO 4014 M16X160 10.9	SECHSKANTSCHRAUBE		
76	226017802	4	EDGE PROTECTION METER WARE	KANTENSCHUTZ METERWARE		
77	10582001	1	U-STEEL	U-STAHL		
78	916183314	1	HOSE HOLDER HYDR.ST.CONST. CPL	SCHLAUCHHALTER SCHWK HYD		
79	10540510	49	WASHER ISO 7093-1 8 A4	SCHEIBE		
80	993419814	2	LIEBHERR SIGN ⇨ ❑ 461	SCHILD LIEBHERR		
81	10349598	2	SUPPORT SHEET	AUFLAGEBLECH		
82	10349599	2	SUPPORT SHEET	AUFLAGEBLECH		
83	10540492	32	HEX NUT ISO 10511 M6 A4	SECHSKANTMUTTER		
84	10581980	1	GRATING	GITTERROST		
85	10581981	1	GRATING	GITTERROST		
86	10540511	16	WASHER ISO 7093-1 10 A4	SCHEIBE		
87	406509314	16	HEX SCREW ISO 4017 M10X35 A4-70	SECHSKANTSCHRAUBE		
88	726612214	4	RUBBER MOUNT	LAGER GUMMI		
90	959332514	1	WP	WP		
91	404251014	4	SOCKET HEAD SCREW ISO 4762 M6X35 A4-7	ZYLINDERSCHRAUBE		
92	11239010	1	GRATING	GITTERROST		
93	971363403	1	PLATE	BLECH		
94	406511614	2	HEX SCREW ISO 4017 M10X30 A4-70	SECHSKANTSCHRAUBE		
95	10581982	1	GRATING	GITTERROST		
97	432003714	2	DOWEL PIN ISO 8752 5X16	SPANNSTIFT		
98	11240009	3	PIN	BOLZEN		
110	11266945	1	SIGN LOCATIONS	SCHILDER ANORD		

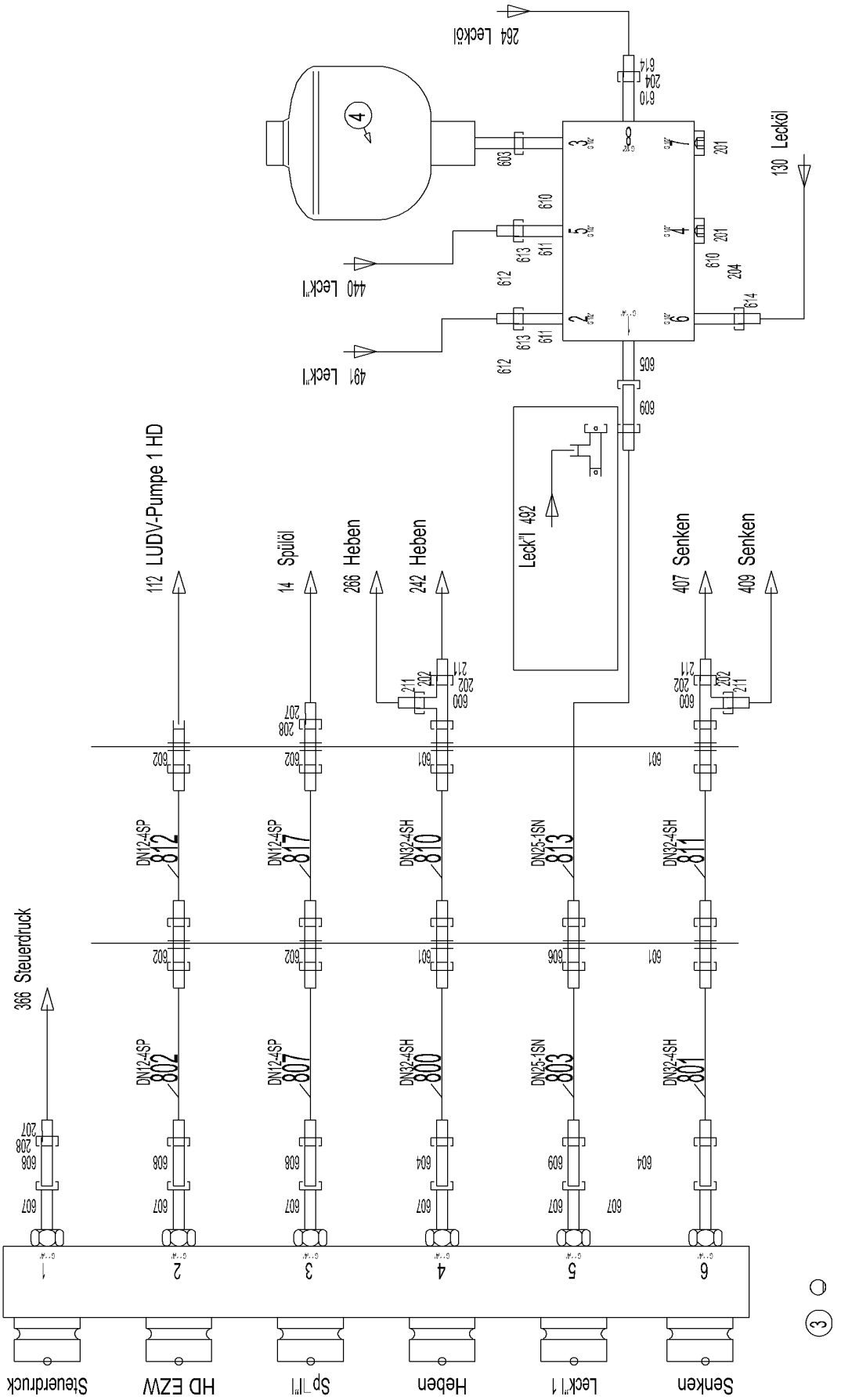
264 Lecköl
130 Lecköl
440 Leck
491 Leck
492 Leck
112 LUDV-Pumpe 1 HD
14 Spülöl
266 Heben
242 Heben
407 Senken
409 Senken
366 Steuerdruck
DN12-4SP 812
DN12-4SP 817
DN32-4SH 810
DN25-1SN 813
DN32-4SH 811
DN12-4SP 802
DN12-4SP 807
DN32-4SH 800
DN25-1SN 803
DN32-4SH 801
Steuerdruck
HD EZW
Sp
Heben
Leck 1
Senken
516998

Pos.	Item	Quantity	Description	Bezeichnung	Serie	K
2	10551576	1	QUICK RELEASE FITTING ⇨ ❑ 454	SCHNELLVERSCHLUSSKUPPLUN		
3	10445126	1	ENCLOSURE CPL	GEHAEUSE KPL		
4	592274714	1	DIAPHRAGM ACCUMULATOR	MEMBRANSPEICHER		
5	943958914	1	BLOCK	BLOCK		
201	247112702	2	FLANGE JOINT	VERSCHRAUBUNG		
202	477401014	4	FLANGE JOINT	VERSCHRAUBUNG		
204	247049102	2	FLANGE JOINT	VERSCHRAUBUNG		
207	477701114	2	FLANGE JOINT	VERSCHRAUBUNG		
208	477400614	2	FLANGE JOINT	VERSCHRAUBUNG		
211	477701814	4	FLANGE JOINT	VERSCHRAUBUNG		
600	482331914	2	FLANGE JOINT	VERSCHRAUBUNG		
601	474033014	4	FLANGE JOINT	VERSCHRAUBUNG		
602	474032614	4	FLANGE JOINT	VERSCHRAUBUNG		
603	247011602	1	FLANGE JOINT	VERSCHRAUBUNG		
604	471034414	2	FLANGE JOINT	VERSCHRAUBUNG		
605	247042702	1	FLANGE JOINT	VERSCHRAUBUNG		
606	247027402	1	FLANGE JOINT	VERSCHRAUBUNG		
607	247116402	6	FLANGE JOINT	VERSCHRAUBUNG		
608	471033214	3	FLANGE JOINT	VERSCHRAUBUNG		
609	247010102	2	FLANGE JOINT	VERSCHRAUBUNG		
610	247009702	3	FLANGE JOINT	VERSCHRAUBUNG		
611	247009202	2	FLANGE JOINT	VERSCHRAUBUNG		
612	477700514	2	FLANGE JOINT	VERSCHRAUBUNG		
613	247048802	2	FLANGE JOINT	VERSCHRAUBUNG		
614	477700114	2	FLANGE JOINT	VERSCHRAUBUNG		

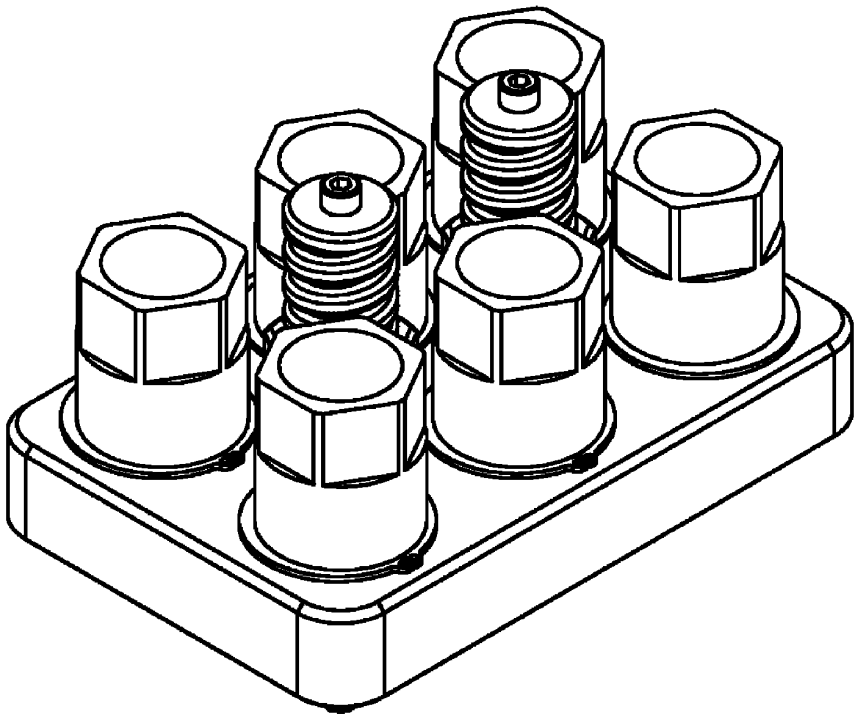

514780

Pos.	Item	Quantity	Description	Bezeichnung	Serie	K
1	10572236	2	GUIDING BOLT	FUEHRUNGSBOLZEN		
2	10447747	6	PLUG	STECKER		
3	10572242	1	COVER	DECKEL		

OHNE BILD
WITHOUT ILLUSTRATION
SANS PLANCHE
SIN FIG.
SEM ILUSTRAÇÃO
БЕЗ ИЗОБРАЖЕНИЯ

600000

Pos.	Item	Quantity	Description	Bezeichnung	Serie	K
10	11286324	1	ANGLE TRANSMITTER	WINKELGEBER		
21	10572939	1	CABLE LOOM 1 PIVOT PIECE EL	KABELSATZ 1 ANLENKSTUECK E		
31	919252814	1	CABLE DRUM ⇨ ❑ 456	KABELTROMMEL		

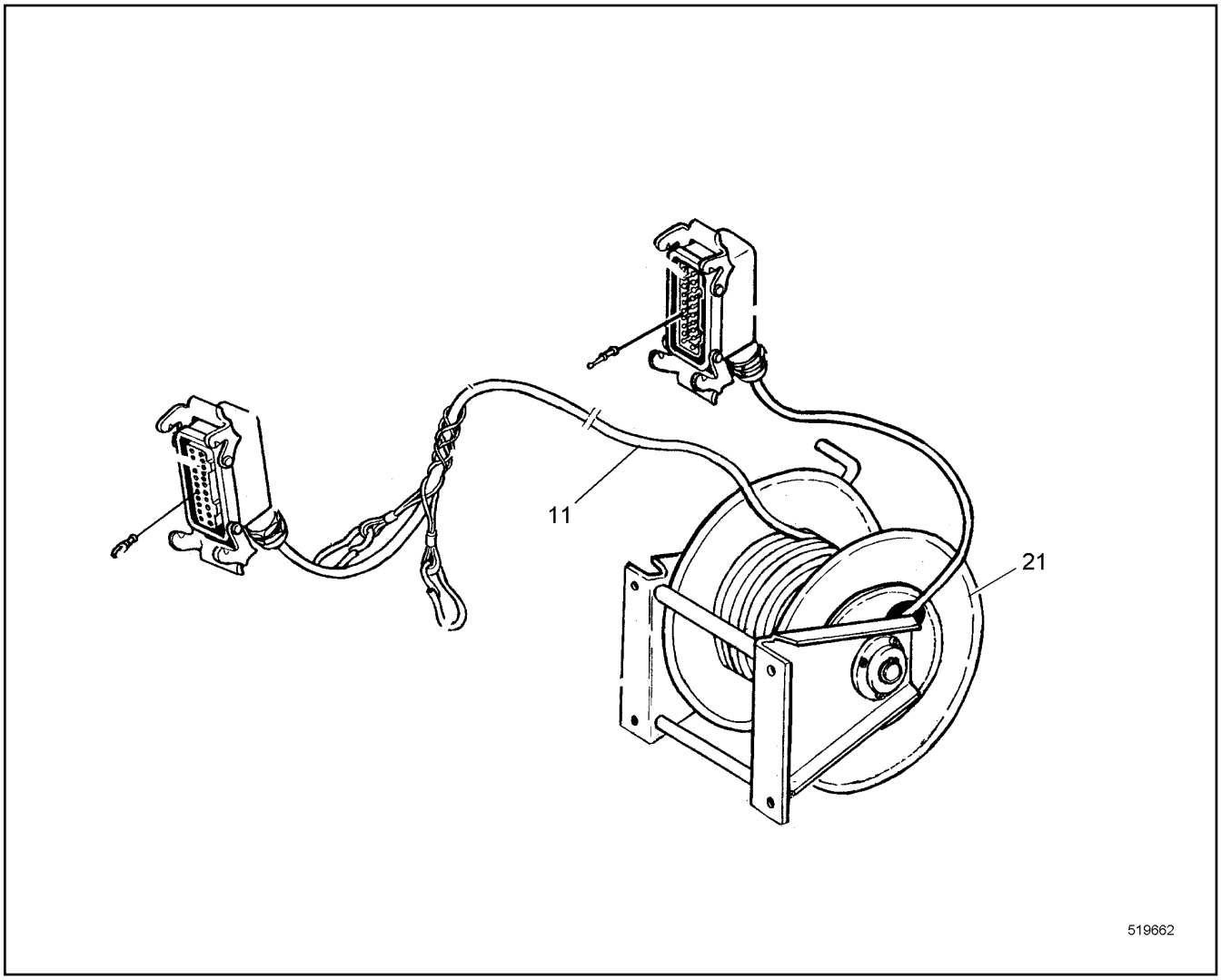

Pos.	Item	Quantity	Description	Bezeichnung	Serie	K
11	11265111	1	WIRING HARNESS	KABELSTRANG		
21	616154114	1	CABLE DRUM ⇨ ❑ 457	KABELTROMMEL		
22	226016702	0.45	EDGE PROTECTION METER WARE	KANTENSCHUTZ METERWARE		

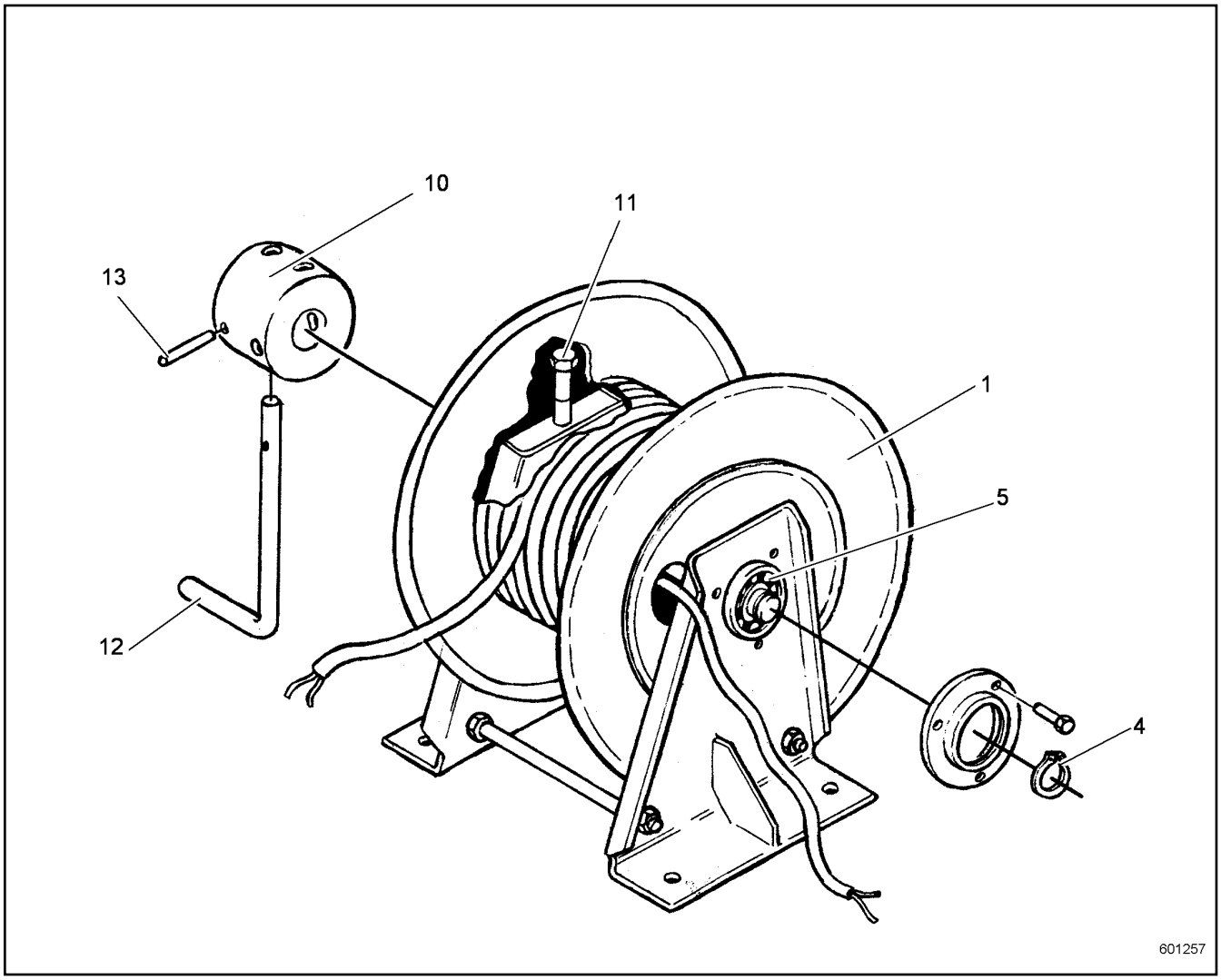

Pos.	Item	Quantity	Description	Bezeichnung	Serie	K
1	10227104	1	DRUM BODY	TROMMELKOERPER		
3	4280020	3	LOCKING RING DIN 471 25X1.2	SICHERUNGSRING		
4	616155214	2	DEEP GROOVE BALL BEARING	RILLENKUGELLAGER		
7	10227128	1	LOCKING DEVICE	ARRETIERUNG		
8	10227126	1	BUSHING	BUCHSE		
9	10227129	1	PIN M12X1.5 NIROSTA	BOLZEN		
10	616155414	1	CRANK HANDLE	HANDKURBEL		
11	616155514	1	TENSION PIN	SCHWERSPANNSTIFT		

ACHTUNG !
ATTENTION !
ATTENTION !
ATENCIÓN !
ATENÇÃO !
ВНИМАНИЕ

Für Schlauchbestellungen kann über die Schlauchnummer, in der entsprechenden Schlauchliste, die Identnummer festgestellt werden.

For ordering flexible hoses you can find the identification number through the hose-number in the corresponding hose-list.

Pour des ordres de tuyau flexible le nombre d'identification on voit dans la liste de tuyau flexible correspondente.

Para el pedido de manguera, indicar el número de identificación de la manguera de la lista respectiva.

Para se encomendar uma mangueira, consulte o número de identificaçao na respectiva lista de mangueiras.

Для оформления заказов на шланги/рукавы идент. № может быть определен при помощи номера шланга/рукава, указанного в соотетствующем перечне шлангов/рукавов.

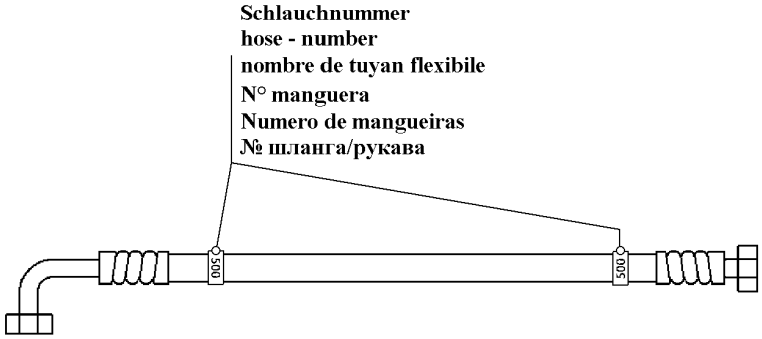

500000

Pos.	Item	Quantity	Description	Bezeichnung	Serie	K
800	993226114	1	HOSE CPL	SCHLAUCH KPL		
801	993226114	1	HOSE CPL	SCHLAUCH KPL		
802	928318214	1	HOSE CPL	SCHLAUCH KPL		
803	992893114	1	HOSE CPL	SCHLAUCH KPL		
807	928318214	1	HOSE CPL	SCHLAUCH KPL		
810	991198814	1	HOSE CPL	SCHLAUCH KPL		
811	991198814	1	HOSE CPL	SCHLAUCH KPL		
812	991563114	1	HOSE CPL	SCHLAUCH KPL		
813	992504214	1	HOSE CPL	SCHLAUCH KPL		
817	991563114	1	HOSE CPL	SCHLAUCH KPL		

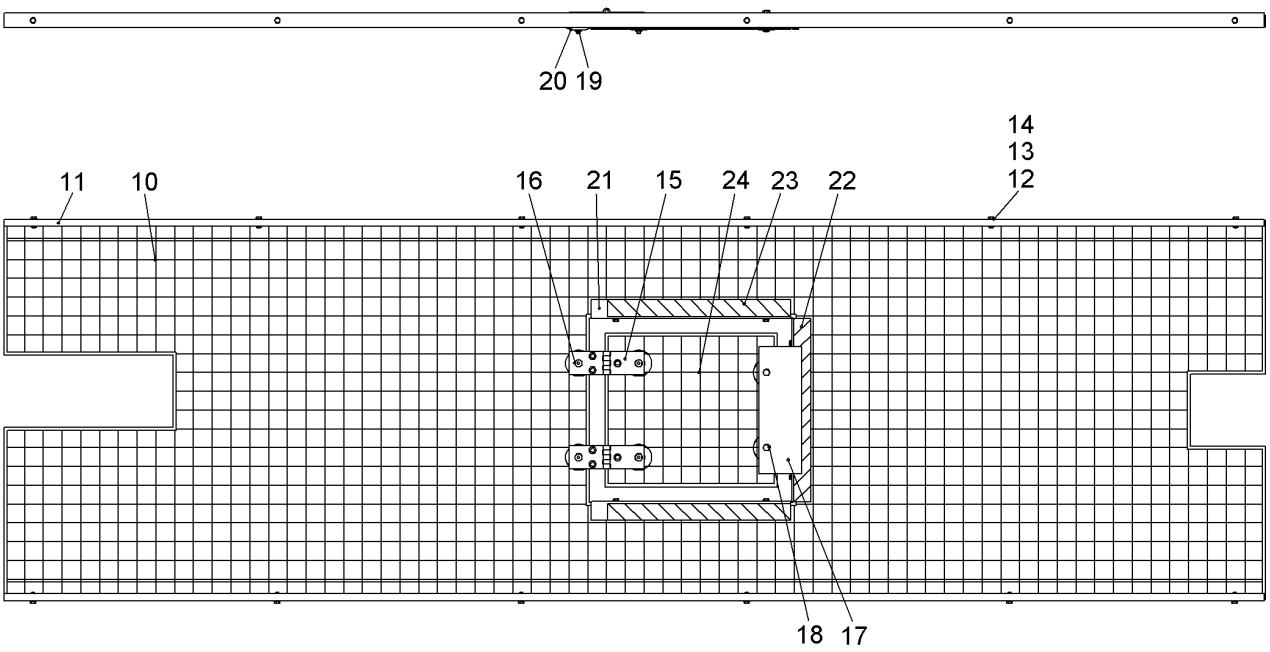

Pos.	Item	Quantity	Description	Bezeichnung	Serie	K
10	10598959	1	GRATING	GITTERROST		
11	10565639	2	U-STEEL	U-STAHL		
12	420000414	36	WASHER ISO 7089 6 A4	SCHEIBE		
13	406532614	18	HEX SCREW ISO 4017 M6X20 A4-70	SECHSKANTSCHRAUBE		
14	10540492	18	HEX NUT ISO 10511 M6 A4	SECHSKANTMUTTER		
15	954560603	2	HINGE	SCHARNIER		
16	408601008	4	COUNTERSUNK SCREW DIN 7991 M8X45 8.8;	SENKSCHRAUBE		
17	958908914	1	LIMIT STOP PLATE	ANSCHLAGPLATTE		
18	406532914	2	HEX SCREW ISO 4017 M8X40 A4-70	SECHSKANTSCHRAUBE		
19	10540493	6	HEX NUT ISO 10511 M8 A4	SECHSKANTMUTTER		
20	10098157	6	DISH	TELLER		
21	10581999	2	U-STEEL	U-STAHL		
22	10582001	1	U-STEEL	U-STAHL		
23	773193414	1	SIGN	SCHILD		
24	10599053	1	GRATING	GITTERROST		

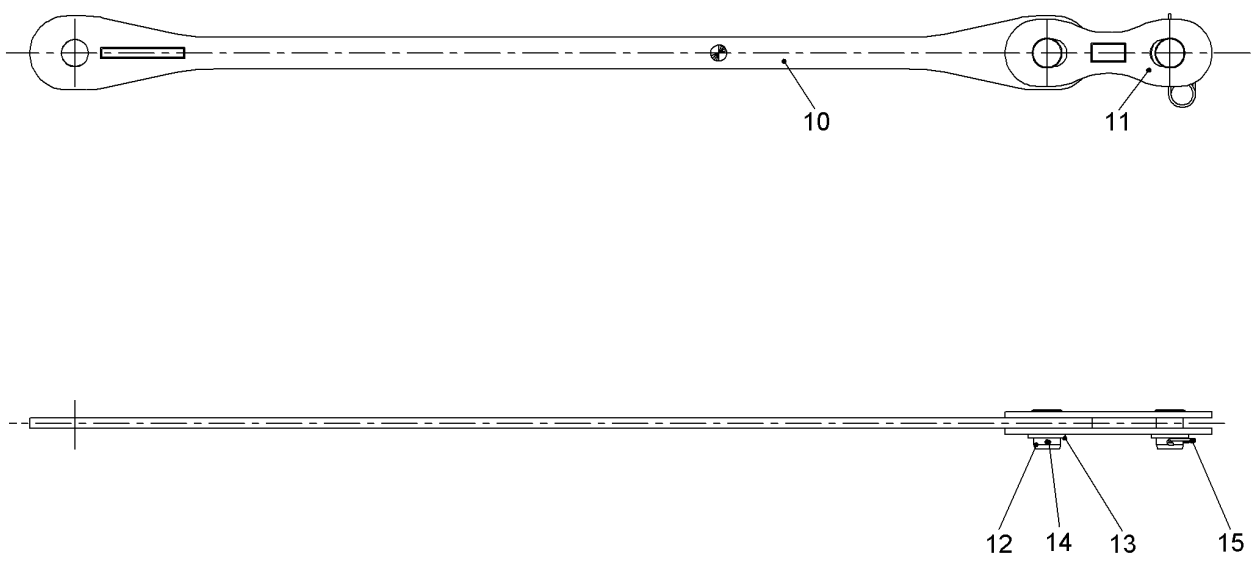

510054

Pos.	Item	Quantity	Description	Bezeichnung	Serie	K
10	10336970	2	ANCHORING ROD	HALTESTANGE		
11	10226402	4	COUPLING LINK	KOPPELLASCHE		
12	959575714	4	PIN 73X95 LHRD900-40;10019758	BOLZEN		
13	421103614	4	WASHER DIN EN 28738 65 ST;	SCHEIBE		
14	433009514	2	SPLIT PIN ISO 1234 8X100 A4	SPLINT		
15	433105008	2	RETAINING SPRING DIN 2194 6MM FS	SICHERUNGSFEDER		

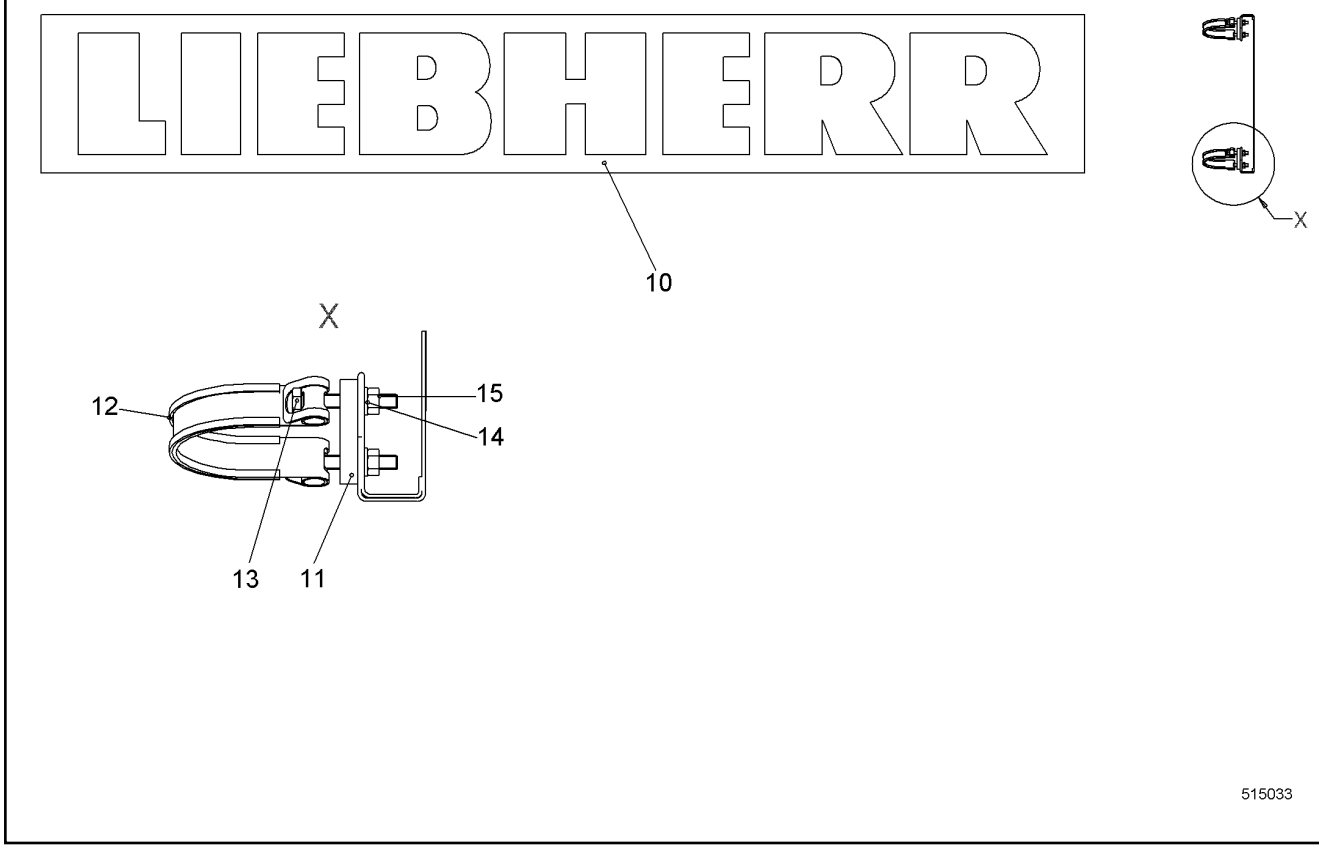

Pos.	Item	Quantity	Description	Bezeichnung	Serie	K
11	10350084	4	REINFORCING PLATE	VERSTAERKUNGSPLATTE		
12	10530689	4	TIGHTENING STRAP HINGE PIN	GELENKBOLZENSPANNBAND		
13	10331506	8	HEX SCREW ISO 4017 M8X55 A4-70	SECHSKANTSCHRAUBE		
14	420001014	8	WASHER ISO 7089 8 A4	SCHEIBE		
15	10540493	8	HEX NUT ISO 10511 M8 A4	SECHSKANTMUTTER		

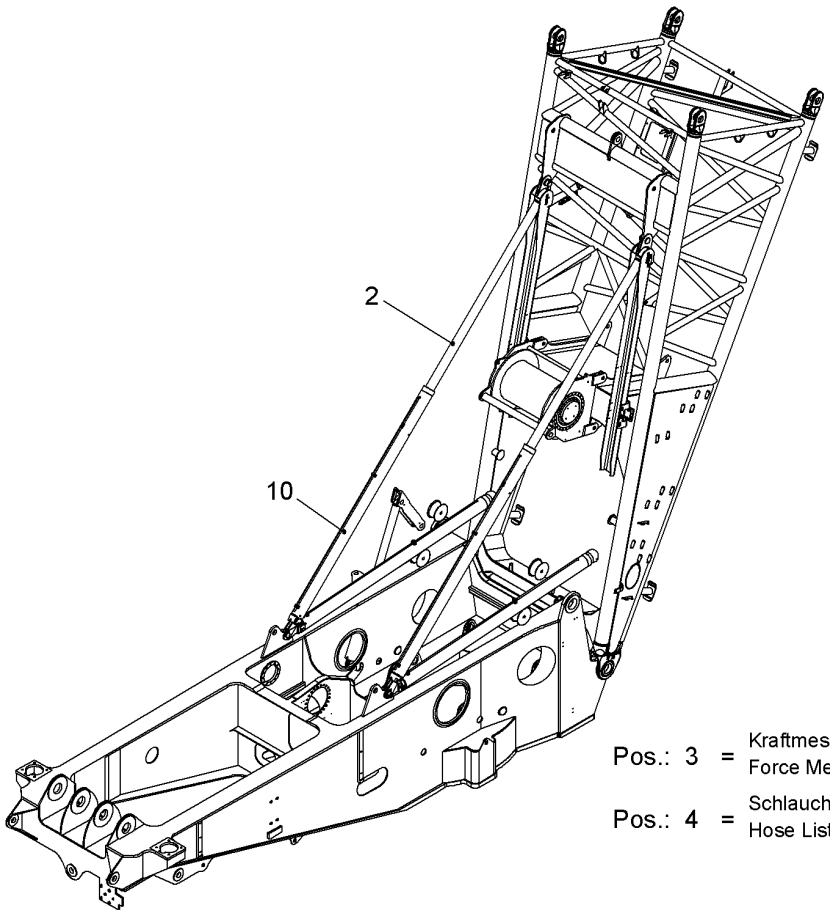

Pos.	Item	Quantity	Description	Bezeichnung	Serie	K
2	10585108	1	TILTING-BACK SUPPORTS HYDR RFK ⇨ ❑ 463	RUECKFALLSTUETZEN HYDR NR		
3	11292596	1	FORCE MEASURING AXLE EL ⇨ ❑ 468	KRAFTMESSACHSE EL		
4	11229706	1	HOSE LIST ⇨ ❑ 469	SCHLAUCHLISTE		
10	11275365	1	TILT-BACK SUPPORTS INSTAL. ⇨ ❑ 470	RUECKFALLSTUETZEN EINBAU		

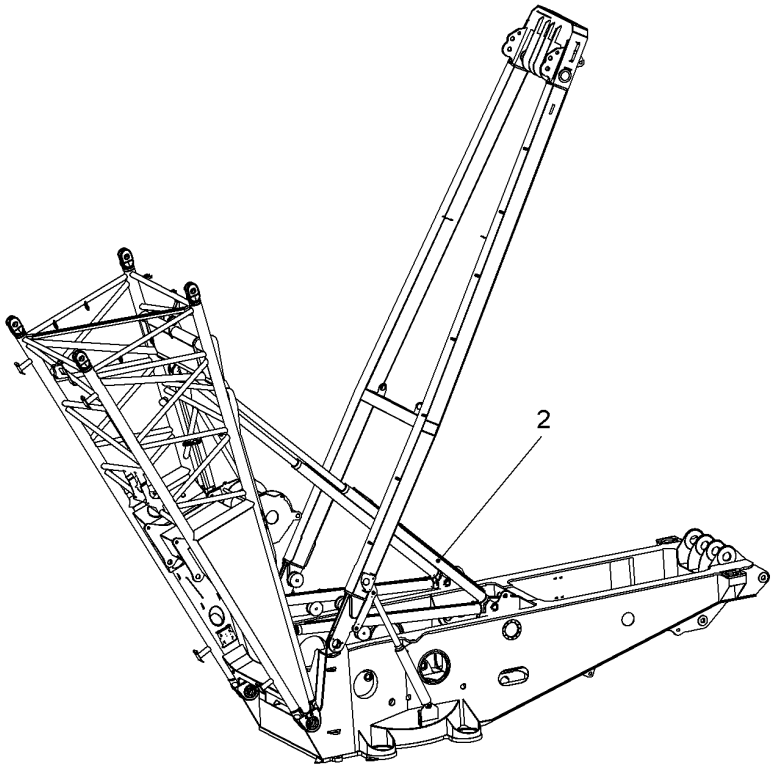

Pos.	Item	Quantity	Description	Bezeichnung	Serie	K
2	10519591	1	TUBING HYDR ⇨ ❑ 464	VERROHRUNG HYDR		

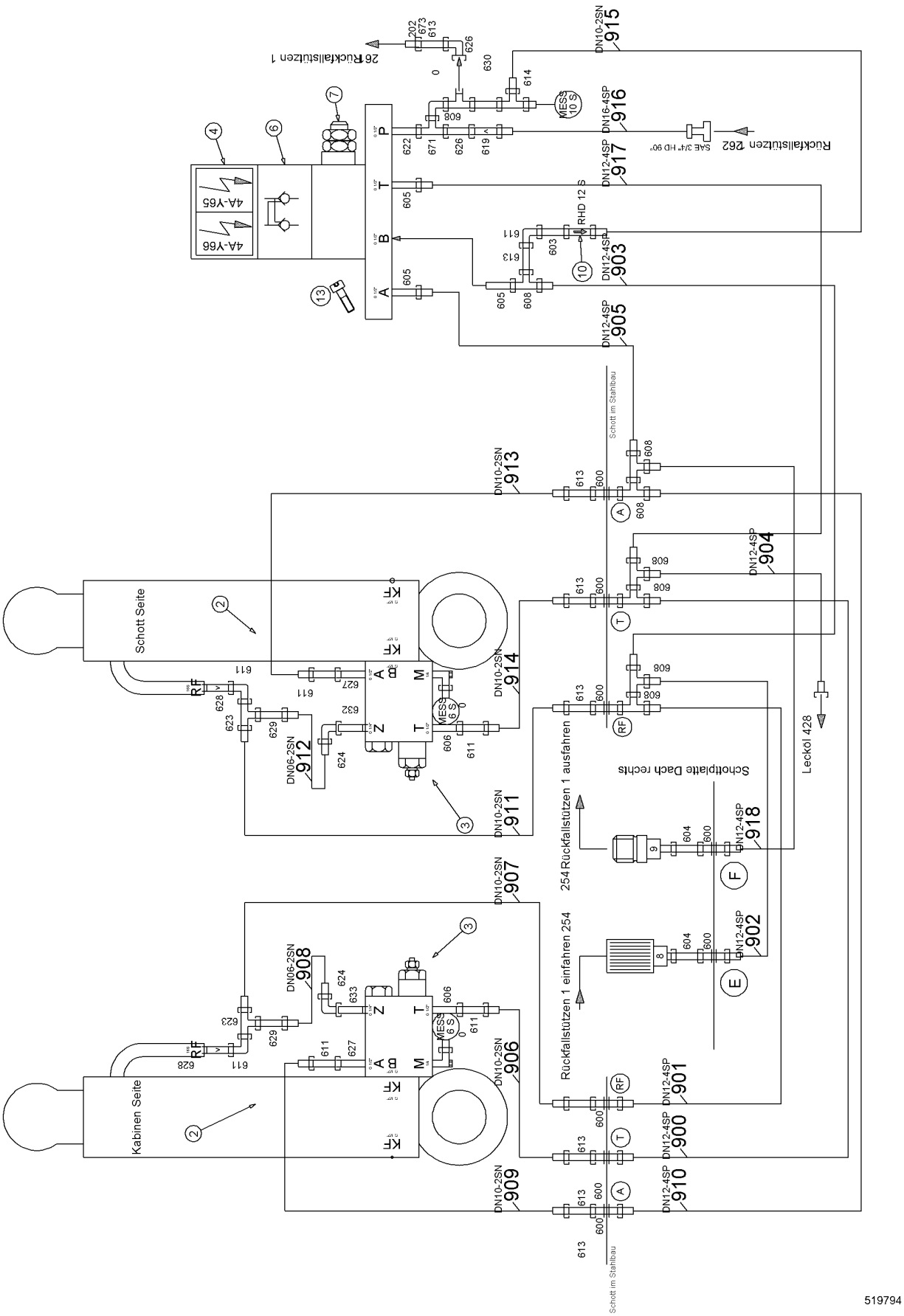
Schott Seite
Kabinen Seite
Schott im Stahlbau
Schott im Stahlbau
Schottplatte Dach rechts
Leckol 428
Rückfallstützen 1 einfahren 254
254 Rückfallstützen 1 ausfahren
26 Rückfallstützen 1
Rückfallstützen 262
SAE 3/4" HD 90°
RHD 12 S
MESS 10 S
MESS 6 S
4A-Y65
4A-Y66
DN10-2SN 915
DN16-4SP 916
DN12-4SP 917
DN12-4SP 903
DN12-4SP 905
DN10-2SN 913
DN12-4SP 904
DN10-2SN 914
DN06-2SN 912
DN10-2SN 911
DN12-4SP 918
DN10-2SN 907
DN12-4SP 902
DN06-2SN 908
DN10-2SN 906
DN12-4SP 901
DN12-4SP 900
DN10-2SN 909
DN12-4SP 910
519794

Pos.	Item	Quantity	Description	Bezeichnung	Serie	K
2	10099173	2	DOUBLE-ACTING CYL ⇨ ❑ 466	DOPPELWIRKZYL		
3	592022414	2	LOAD HOLDING VALVE ⇨ ❑ 467	LASTHALTEVENTIL		
4	510429214	1	DIRECTIONAL CONTROL VALVE	WEGEVENTIL		
5	510427914	1	CONNECTING PLATE	ANSCHLUSSPLATTE		
6	511607014	1	DOUBLE NON-RETURN VALVE	DOPPELRUECKSCHLAGVENTIL		
7	511475514	1	PRESSURE LIMITING VALVE	DRUCKBEGRENZUNGSVENTIL		
8	510572214	1	QUICK-FITTING THREAD COUPLING	SCHNELLVERSCHRAUBUNGSK		
9	510571914	1	QUICK-FITTING THREAD COUPLING ⇨ ❑ 24	SCHNELLVERSCHRAUBUNGSK		
10	510411614	1	NON-RETURN VALVE	RUECKSCHLAGVENTIL		
13	404203514	4	SOCKET HEAD SCREW ISO 4762 M6X140 10.9	ZYLINDERSCHRAUBE		
201	510694514	1	GAUGE CONNECTION	MESSSTUTZEN		
202	477700514	1	FLANGE JOINT	VERSCHRAUBUNG		
600	474032614	8	FLANGE JOINT	VERSCHRAUBUNG		
603	471100714	1	FLANGE JOINT	VERSCHRAUBUNG		
604	471100114	2	FLANGE JOINT	VERSCHRAUBUNG		
605	471033214	3	FLANGE JOINT	VERSCHRAUBUNG		
606	471032608	2	FLANGE JOINT	VERSCHRAUBUNG		
608	7407098	8	FLANGE JOINT	VERSCHRAUBUNG		
611	7617354	7	FLANGE JOINT	VERSCHRAUBUNG		
613	485433314	8	FLANGE JOINT	VERSCHRAUBUNG		
614	7367776	1	FLANGE JOINT	VERSCHRAUBUNG		
619	475033614	1	FLANGE JOINT	VERSCHRAUBUNG		
622	481930614	1	FLANGE JOINT	VERSCHRAUBUNG		
623	7617461	2	FLANGE JOINT	VERSCHRAUBUNG		
624	472531508	2	FLANGE JOINT	VERSCHRAUBUNG		
626	7617460	2	FLANGE JOINT	VERSCHRAUBUNG		
627	471032708	2	FLANGE JOINT	VERSCHRAUBUNG		
628	475002514	2	FLANGE JOINT	VERSCHRAUBUNG		
629	485433414	2	FLANGE JOINT	VERSCHRAUBUNG		
630	485433514	1	FLANGE JOINT	VERSCHRAUBUNG		
632	473210214	1	FLANGE JOINT	VERSCHRAUBUNG		
633	473231214	1	FLANGE JOINT	VERSCHRAUBUNG		
650	510587514	2	FLANGE HALF	FLANSCHHAELFTE		
660	10490784	1	PLAIN COMPRESSION RING	RECHTECKRING		
670	4001246	4	HEX SCREW ISO 4017 M10X35 10.9	SECHSKANTSCHRAUBE		
671	482431514	1	FLANGE JOINT	VERSCHRAUBUNG		
673	477400414	1	FLANGE JOINT	VERSCHRAUBUNG		

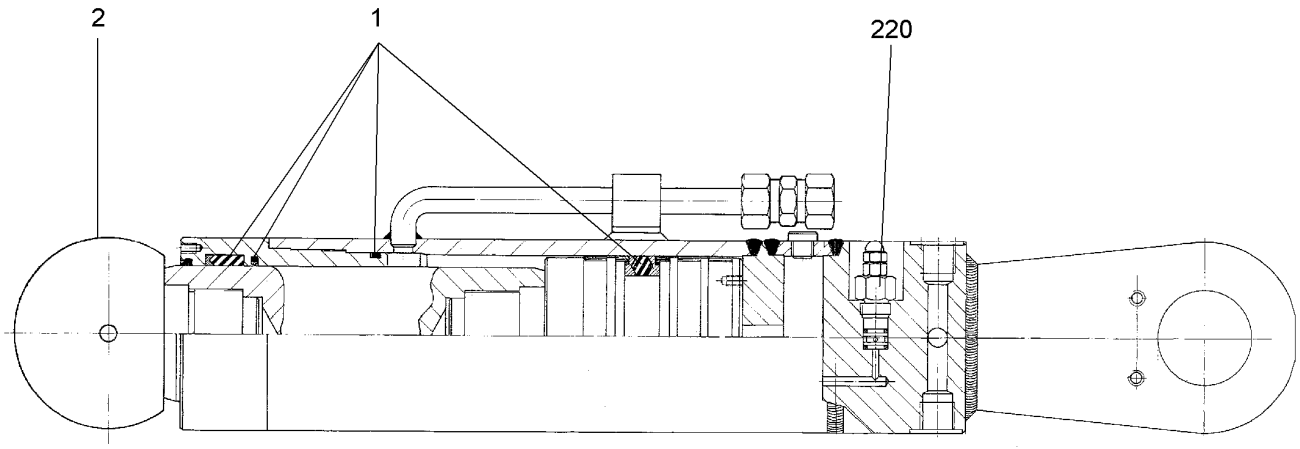

603774

Pos.	Item	Quantity	Description	Bezeichnung	Serie	K
1	10352446	1	SEALING SET CPL CYL	DS KPL ZYL		
2	10505322	1	BALL JOINT	KUGELGELENK		
4	11310567	1	GUIDE BUSHING 145/100X130	FUEHRUNGSBUCHSE		
220	10445040	1	VALVE	VENTIL		

OHNE BILD
WITHOUT ILLUSTRATION
SANS PLANCHE
SIN FIG.
SEM ILUSTRAÇÃO
БЕЗ ИЗОБРАЖЕНИЯ

600000

Pos.	Item	Quantity	Description	Bezeichnung	Serie	K
1	10588723	1	HOLLOW SCREW R1/2"	HOHLSCHRAUBE		
2	11233731	1	PRESSURE LIMITING VALVE	DRUCKBEGRENZUNGSVENTIL		
3	11270155	1	NON-RETURN VALVE	RUECKSCHLAGVENTIL		
4	10588725	1	FLAT SEALING RING	FLACHDICHTRING		
5	10588729	1	EDGE SEALING RING	DICHTKANTENRING		

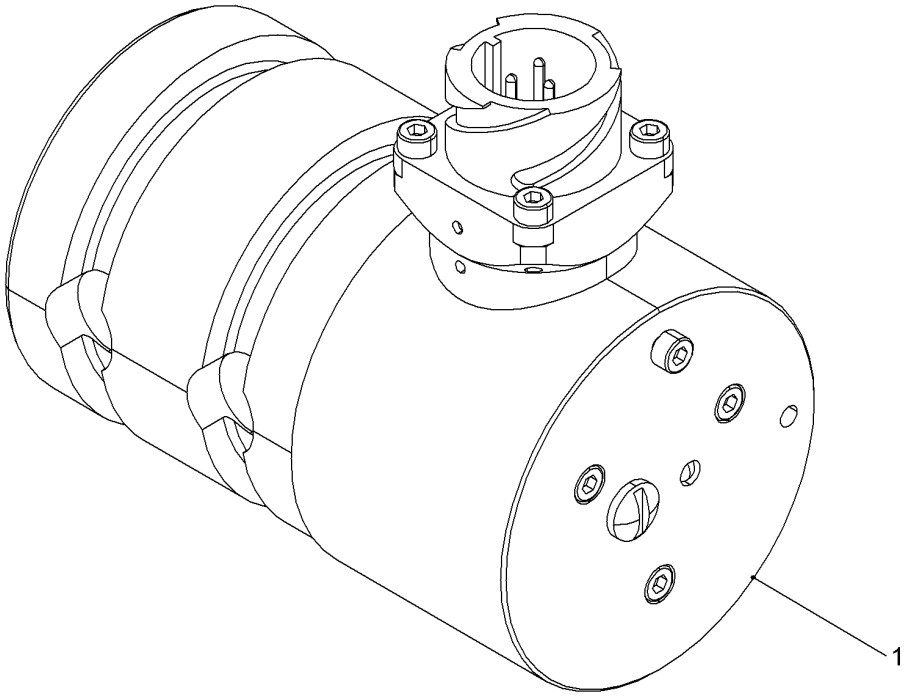

Pos.	Item	Quantity	Description	Bezeichnung	Serie	K
1	11261289	2	FORCE MEASURING AXLE	KRAFTMESSACHSE		

ACHTUNG !
ATTENTION !
ATTENTION !
ATENCIÓN !
ATENÇÃO !
ВНИМАНИЕ

Für Schlauchbestellungen kann über die Schlauchnummer, in der entsprechenden Schlauchliste, die Identnummer festgestellt werden.

For ordering flexible hoses you can find the identification number through the hose-number in the corresponding hose-list.

Pour des ordres de tuyau flexible le nombre d'identification on voit dans la liste de tuyau flexible correspondente.

Para el pedido de manguera, indicar el número de identificación de la manguera de la lista respectiva.

Para se encomendar uma mangueira, consulte o número de identificaçao na respectiva lista de mangueiras.

Для оформления заказов на шланги/рукавы идент. № может быть определен при помощи номера шланга/рукава, указанного в соотетствующем перечне шлангов/рукавов.

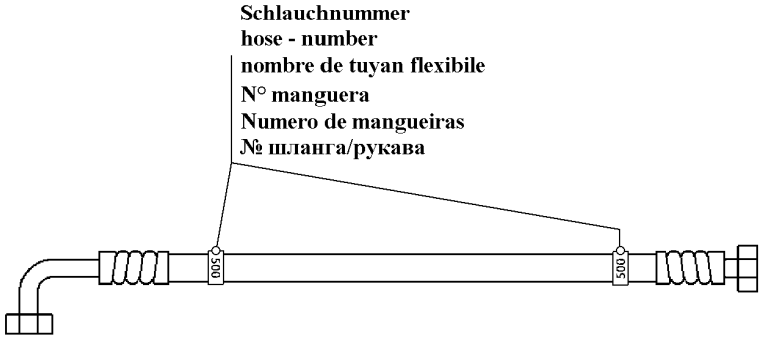

500000

Pos.	Item	Quantity	Description	Bezeichnung	Serie	K
900	994486214	1	HOSE CPL	SCHLAUCH KPL		
901	994486214	1	HOSE CPL	SCHLAUCH KPL		
902	919778814	1	HOSE CPL	SCHLAUCH KPL		
903	918870314	1	HOSE CPL	SCHLAUCH KPL		
904	928014714	1	HOSE CPL	SCHLAUCH KPL		
905	995174014	1	HOSE CPL	SCHLAUCH KPL		
906	928029714	1	HOSE CPL	SCHLAUCH KPL		
907	995865114	1	HOSE CPL	SCHLAUCH KPL		
908	928763814	1	HOSE CPL	SCHLAUCH KPL		
909	928166714	1	HOSE CPL	SCHLAUCH KPL		
910	994486214	1	HOSE CPL	SCHLAUCH KPL		
911	995865114	1	HOSE CPL	SCHLAUCH KPL		
912	928763814	1	HOSE CPL	SCHLAUCH KPL		
913	928166714	1	HOSE CPL	SCHLAUCH KPL		
914	928029714	1	HOSE CPL	SCHLAUCH KPL		
915	991242714	1	HOSE CPL	SCHLAUCH KPL		
916	995959114	1	HOSE CPL	SCHLAUCH KPL		
917	928121514	1	HOSE CPL	SCHLAUCH KPL		
918	991285814	1	HOSE CPL	SCHLAUCH KPL		

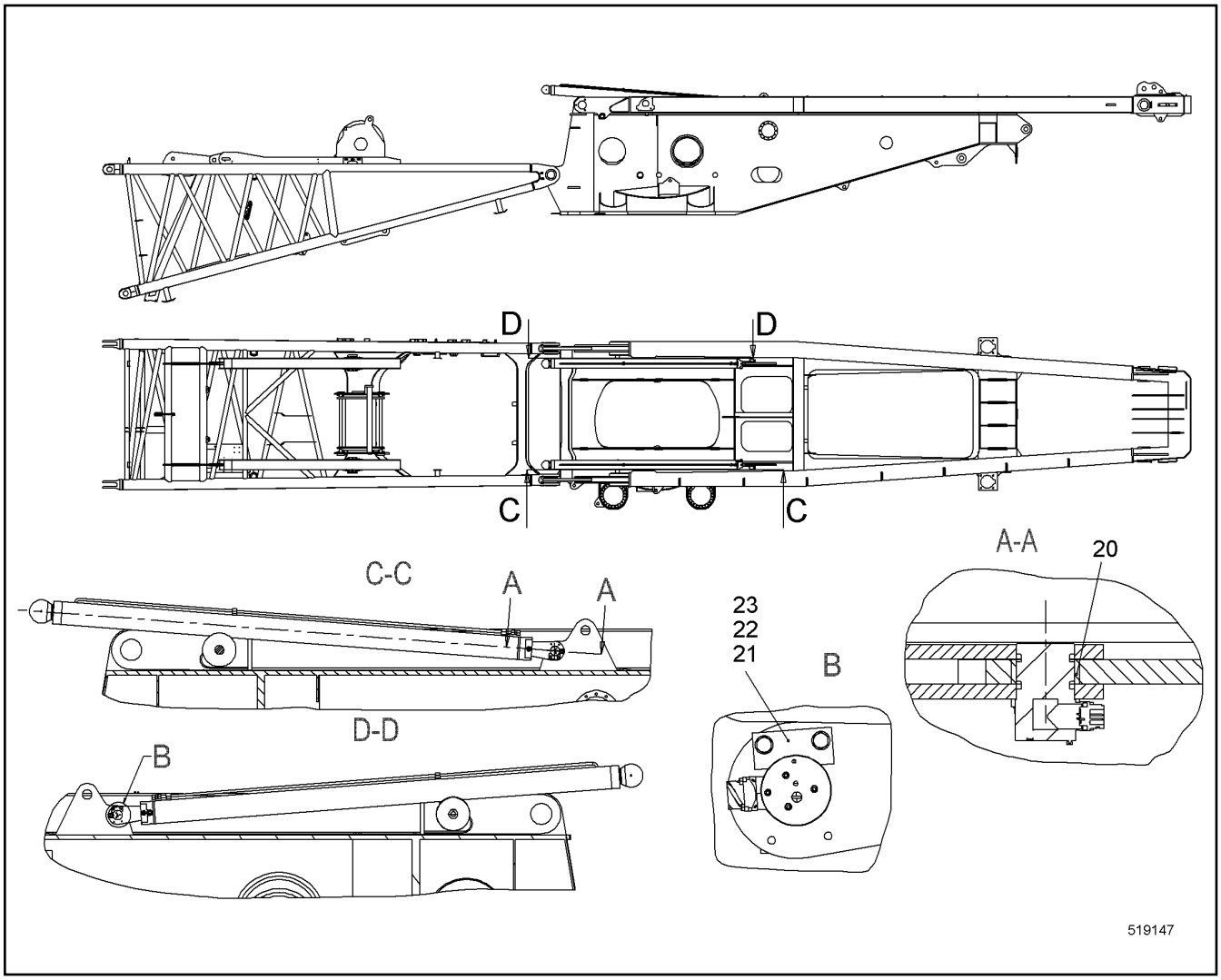

Pos.	Item	Quantity	Description	Bezeichnung	Serie	K
20	10546993	2	BUSHING	BUCHSE		
21	11275578	2	WELD PLATE	ANSCHWEISSPLATTE		
22	420001014	4	WASHER ISO 7089 8 A4	SCHEIBE		
23	406518814	4	HEX SCREW ISO 4017 M8X20 A4-70	SECHSKANTSCHRAUBE		

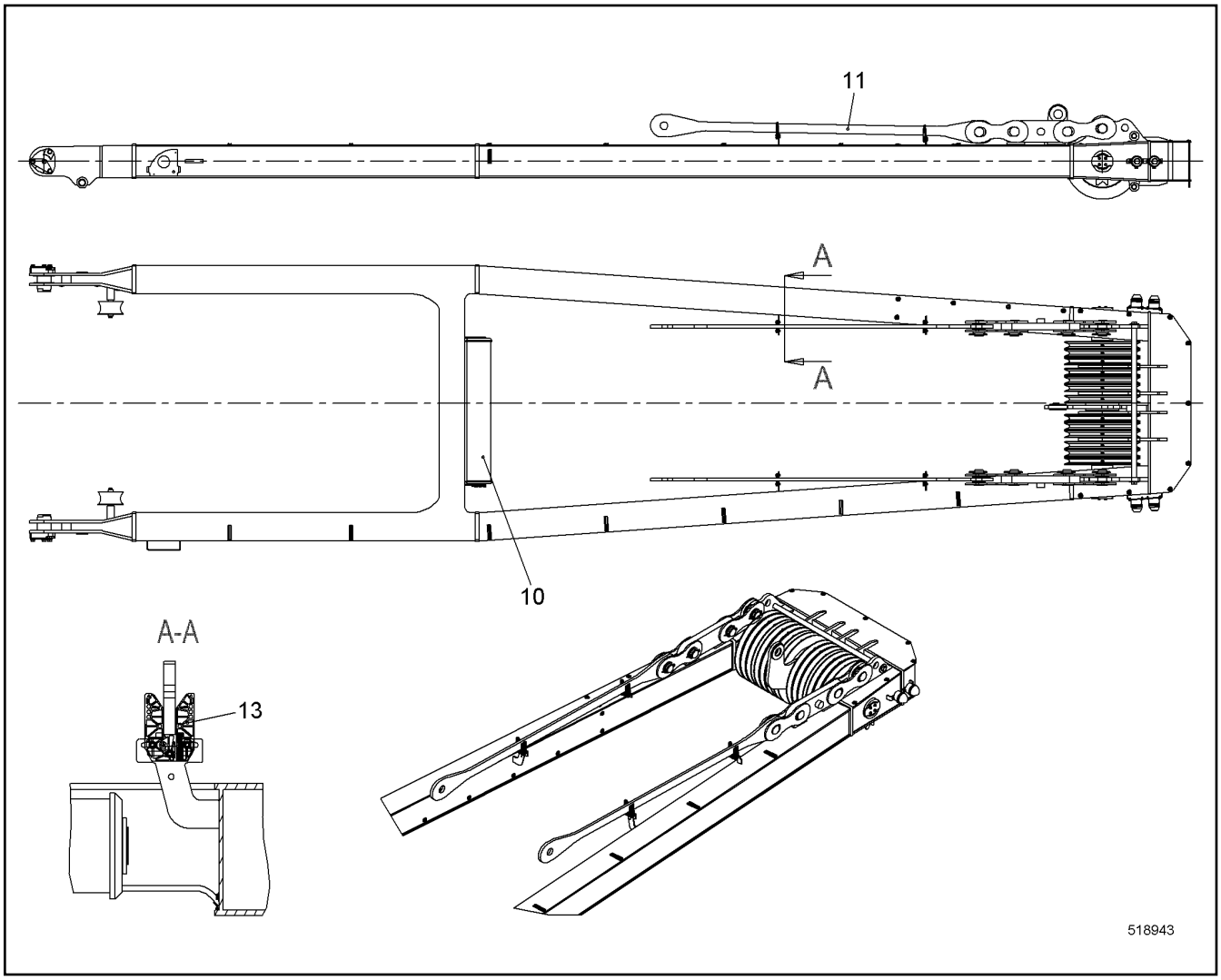

Pos.	Item	Quantity	Description	Bezeichnung	Serie	K
10	11244444	1	A-FRAME 1 CPL ⇨ ❑ 472	A-BOCK 1 KPL		
11	992641714	1	ANCHORING ROD CPL ⇨ ❑ 476	HALTESTANGE KPL		
13	11237498	4	SUPPORT CPL ⇨ ❑ 477	AUFLAGE KPL		

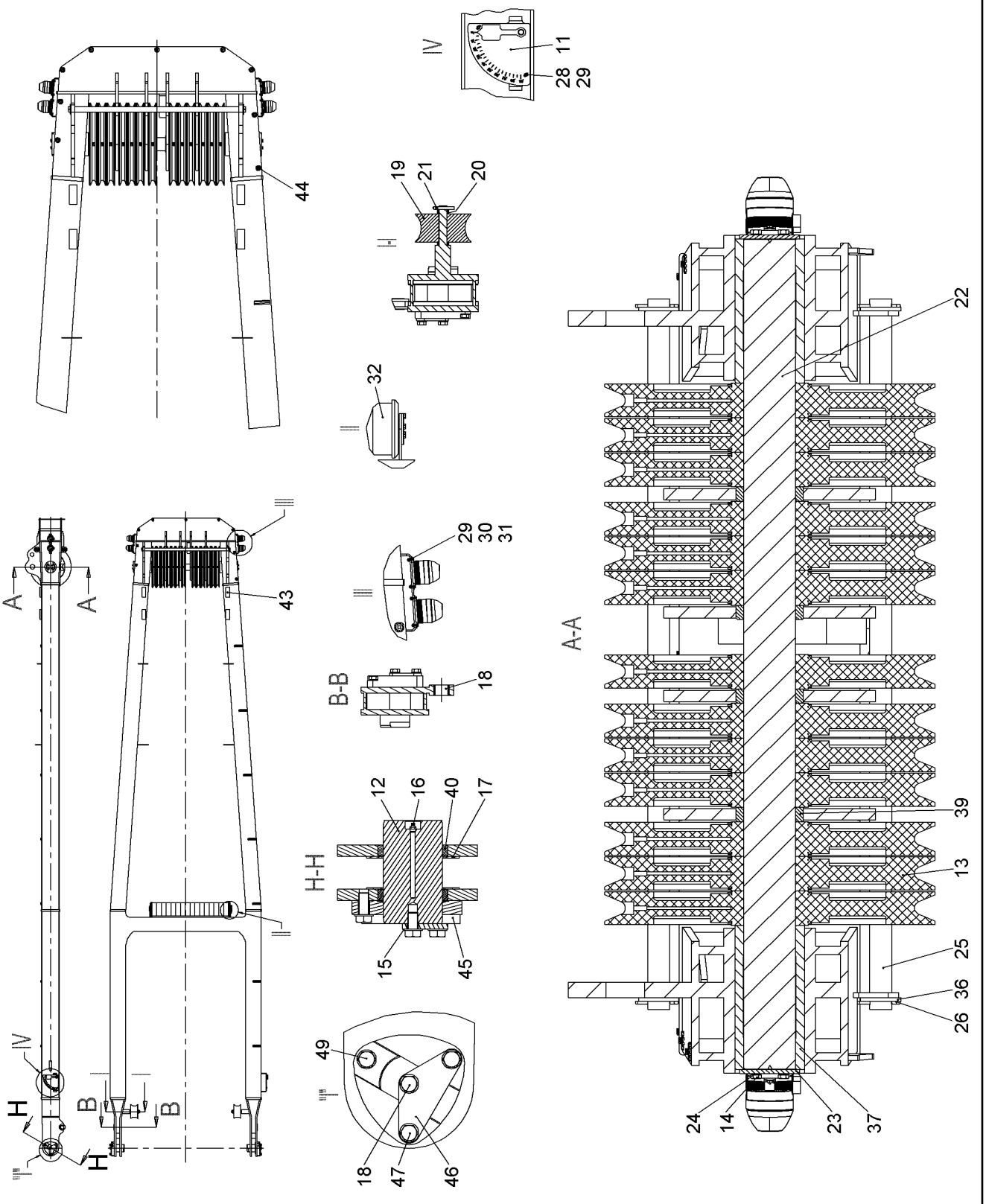

8.7.2015 519818	**138281_ETK_001**	472 (1/2)
LIEBHERR	**A-FRAME 1 CPL** **A-BOCK 1 KPL**	**11 24 444 4**

Pos.	Item	Quantity	Description	Bezeichnung	Serie	K
3	10531207	1	A-FRAME ELECTRICS ⇨ ❑ 474	A-BOCK EL		
11	919058414	1	ANGLE INDICATION	WINKELANZEIGE		
12	949389914	2	PIN 115X200 LHRD900-40;10019758	BOLZEN		
13	914690714	13	ROPE PULLEY CPL	SEILROLLE KPL		
14	406517914	8	HEX SCREW ISO 4017 M12X25 A4-70	SECHSKANTSCHRAUBE		
15	10544174	8	WASHER ISO 7089 20	SCHEIBE		
16	7743242	2	HYDRAULIC-TYPE LUBRICAT.NIPPLE	KEGELSCHMIERNIPPEL		
18	11230849	2	BUSHING 50/60X42	BUCHSE		
19	11256217	2	ROLLER	ROLLE		
20	421102414	10	WASHER DIN EN 28738 30 ST;	SCHEIBE		
21	433014214	2	SPLIT PIN ISO 1234 10X63 A4	SPLINT		
22	11239740	1	PIN 100X1606 LHRD900-40;10019758	BOLZEN		
24	10536581	8	LOCK WASHER 12 254 SMO;EN 10088-3	SICHERUNGSSCHEIBE		
25	959841814	2	ROPE GUARD TUBE	SEILSCHUTZROHR		
26	433008108	4	SPLIT PIN ISO 1234 6.3X63	SPLINT		
28	10539467	2	SOCKET HEAD SCREW ISO 4762 M6X12 A4-7	ZYLINDERSCHRAUBE		
29	420000414	18	WASHER ISO 7089 6 A4	SCHEIBE		
30	406532614	8	HEX SCREW ISO 4017 M6X20 A4-70	SECHSKANTSCHRAUBE		
31	10540492	8	HEX NUT ISO 10511 M6 A4	SECHSKANTMUTTER		
32	991413714	1	DEFLECTION PULLEY CPL ⇨ ❑ 475	UMLENKROLLE KPL		
36	420003714	4	WASHER ISO 7089 42	SCHEIBE		
37	11239698	2	BUSHING	BUCHSE		
39	959841114	4	BUSHING	BUCHSE		
40	970859103	4	BUSHING 115/135X21 E470;EN 10294-1	BUCHSE		
43	991873614	4	SUPPORT CPL	AUFLAGE KPL		
44	11230237	9	FASTENING BS	BEF SOCKEL		
47	10545854	4	HEX SCREW ISO 4017 M20X75 10.9	SECHSKANTSCHRAUBE		
48	10543919	2	HEX SCREW ISO 4017 M20X35 10.9	SECHSKANTSCHRAUBE		
49	10543921	2	HEX SCREW ISO 4017 M20X45 10.9	SECHSKANTSCHRAUBE		

OHNE BILD
WITHOUT ILLUSTRATION
SANS PLANCHE
SIN FIG.
SEM ILUSTRAÇÃO
БЕЗ ИЗОБРАЖЕНИЯ

600000

Pos.	Item	Quantity	Description	Bezeichnung	Serie	K
31	10530243	2	FORCE MEASURING STRAP	KRAFTMESSLASCHE		
35	10524928	2	FLASHING LIGHT	BLITZLEUCHTE		
37	10524927	2	SIGNAL LAMP	SIGNALLEUCHTE		
41	10563800	1	CABLE LOOM W 40	KABELSTRANG W 40		
50	11314473	1	CABLE LOOM W 40	KABELSTRANG W 40		
51	605013508	2	DUST CAP	STAUBKAPPE		

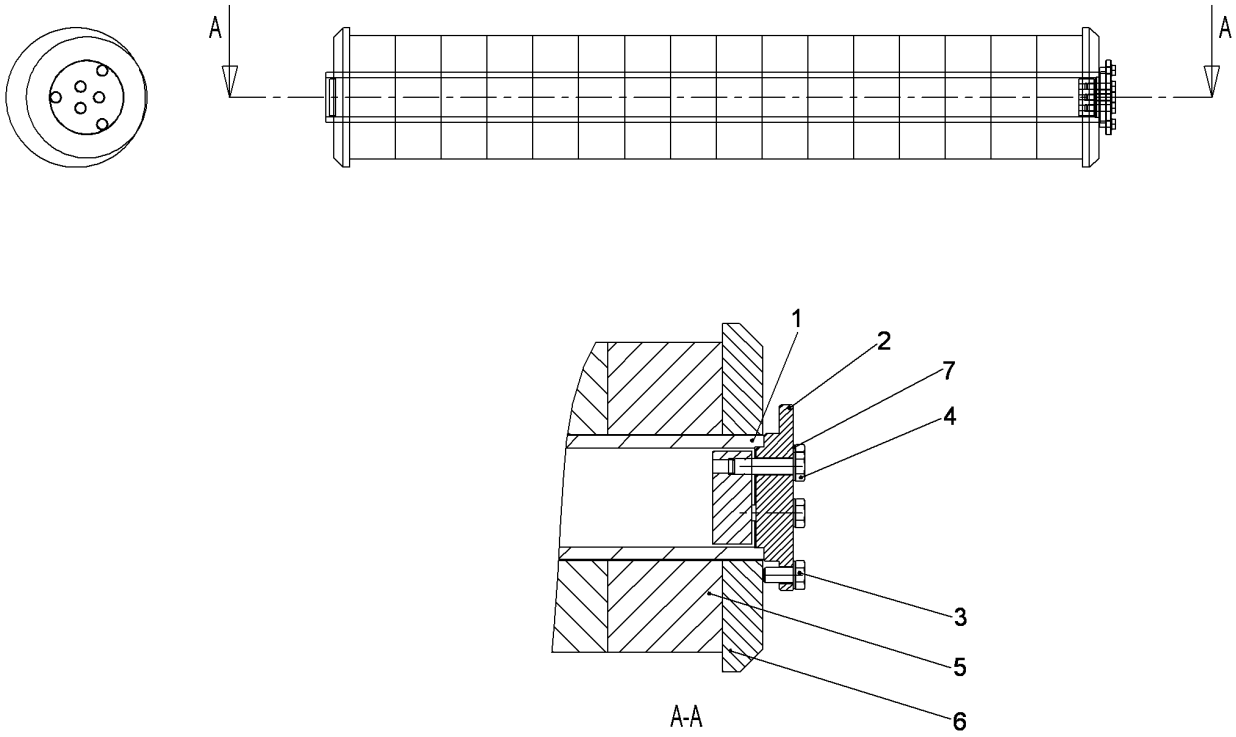

Pos.	Item	Quantity	Description	Bezeichnung	Serie	K
1	991413814	1	AXLE CPL	ACHSE KPL		
3	406518714	3	HEX SCREW ISO 4017 M10X20 A4-70	SECHSKANTSCHRAUBE		
4	406527814	3	HEX SCREW ISO 4017 M10X40 A4-70	SECHSKANTSCHRAUBE		
5	948773814	16	WASHER 81/200X74 PA 6 G	SCHEIBE		
6	970855603	2	WASHER 225/81X26 PA 6 G	SCHEIBE		
7	10447016	6	LOCKING RING 10	SICHERUNGSRING		

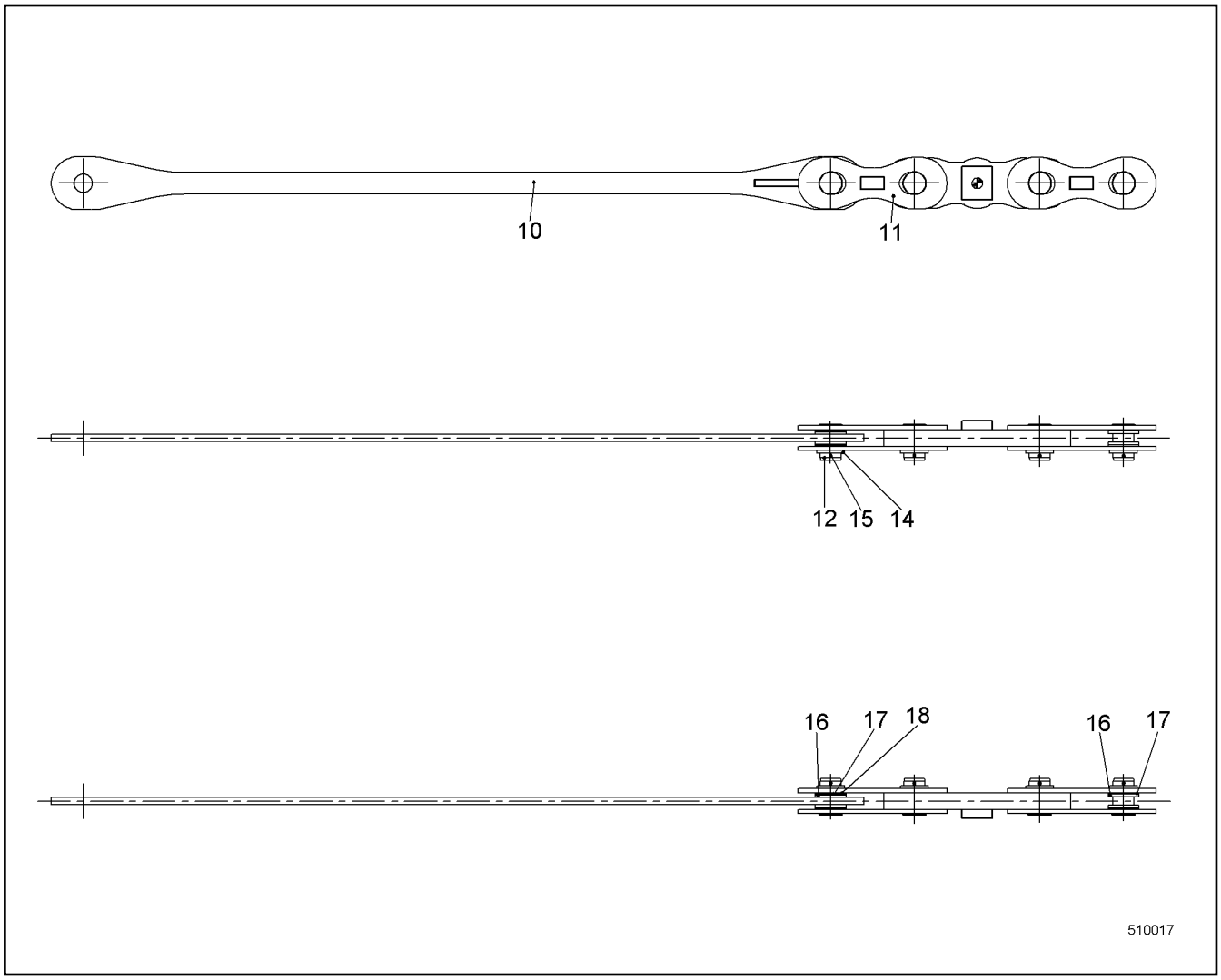

Pos.	Item	Quantity	Description	Bezeichnung	Serie	K
10	10336904	2	ANCHORING ROD	HALTESTANGE		
11	10336761	8	COUPLING LINK	KOPPELLASCHE		
12	959921514	8	PIN 83X131 LHRD900-40;10019758	BOLZEN		
14	421103714	8	WASHER DIN EN 28738 75 ST;	SCHEIBE		
15	433009514	8	SPLIT PIN ISO 1234 8X100 A4	SPLINT		
16	10336924	8	BUSHING 110/75.5X10 POM	BUCHSE		
17	10336926	8	BUSHING 110/75.5X5 POM	BUCHSE		
18	10336928	4	BUSHING 110/75.5X2.5 POM	BUCHSE		

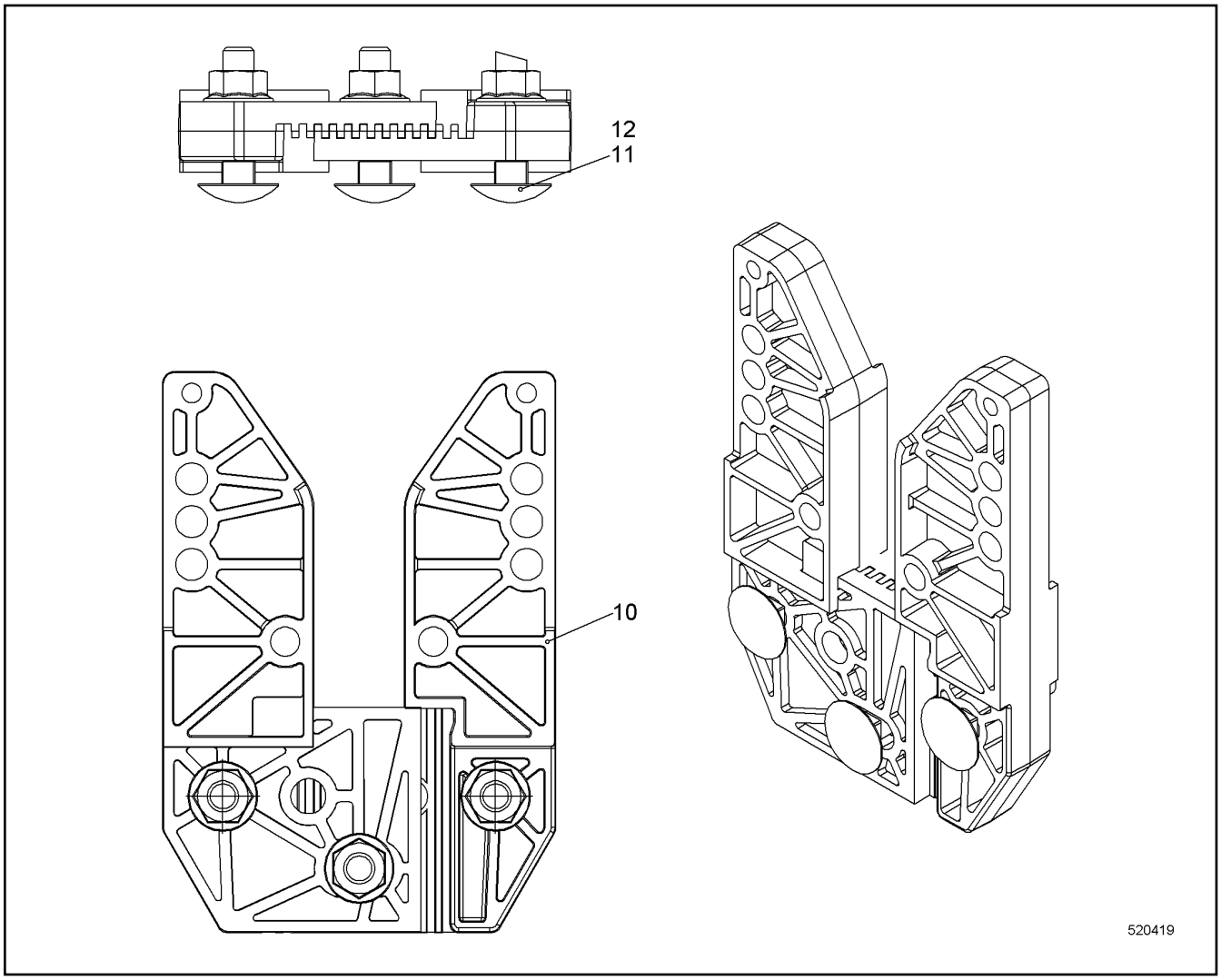

Pos.	Item	Quantity	Description	Bezeichnung	Serie	K
10	11219265	2	SUPPORT	AUFLAGE		
11	11314349	3	CHEESE HEAD SCREW DIN 603 M8X35 A4-70	FLACHRUNDSCHRAUBE		
12	11314341	3	HEX NUT DIN EN 1663 M8 A4	SECHSKANTMUTTER		

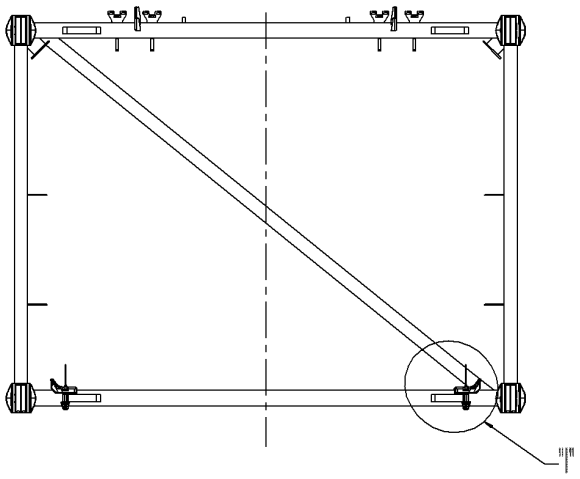

519617

Pos.	Item	Quantity	Description	Bezeichnung	Serie	K
10	992958814	4	SUPPORT ⇨ ❑ 479	AUFLAGE		
11	10350633	2	FASTENER ⇨ ❑ 480	HALTERUNG		

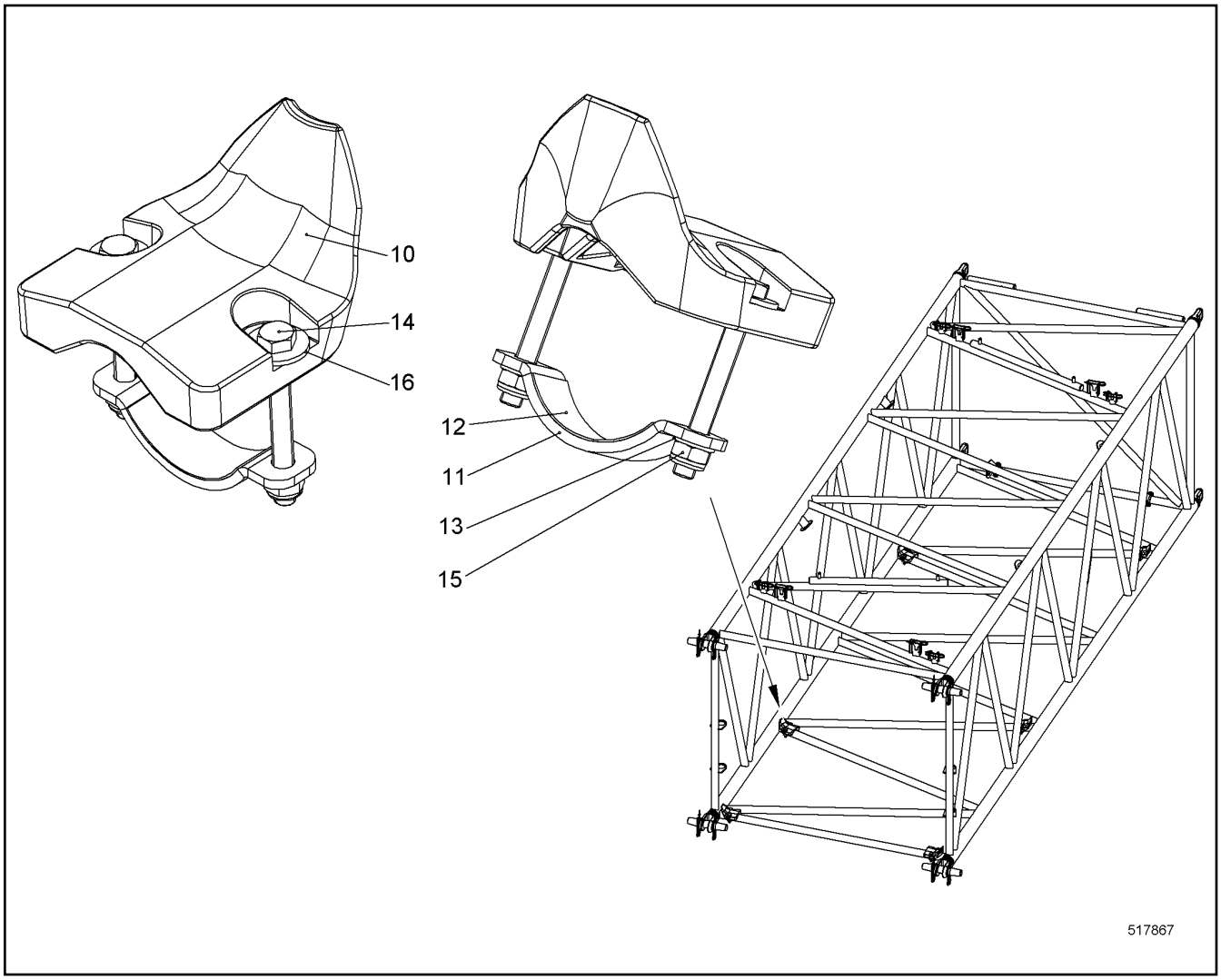

Pos.	Item	Quantity	Description	Bezeichnung	Serie	K
10	289035314	1	SUPPORT	AUFLAGE		
11	10336774	1	CLAMP	SCHELLE		
12	10535526	1	RUBBER	GUMMI		
13	420001114	2	WASHER ISO 7089 10 A4	SCHEIBE		
14	406512114	2	HEX SCREW ISO 4017 M10X90 A4-70	SECHSKANTSCHRAUBE		
15	10540494	2	HEX NUT ISO 10511 M10 A4	SECHSKANTMUTTER		
16	10540511	2	WASHER ISO 7093-1 10 A4	SCHEIBE		

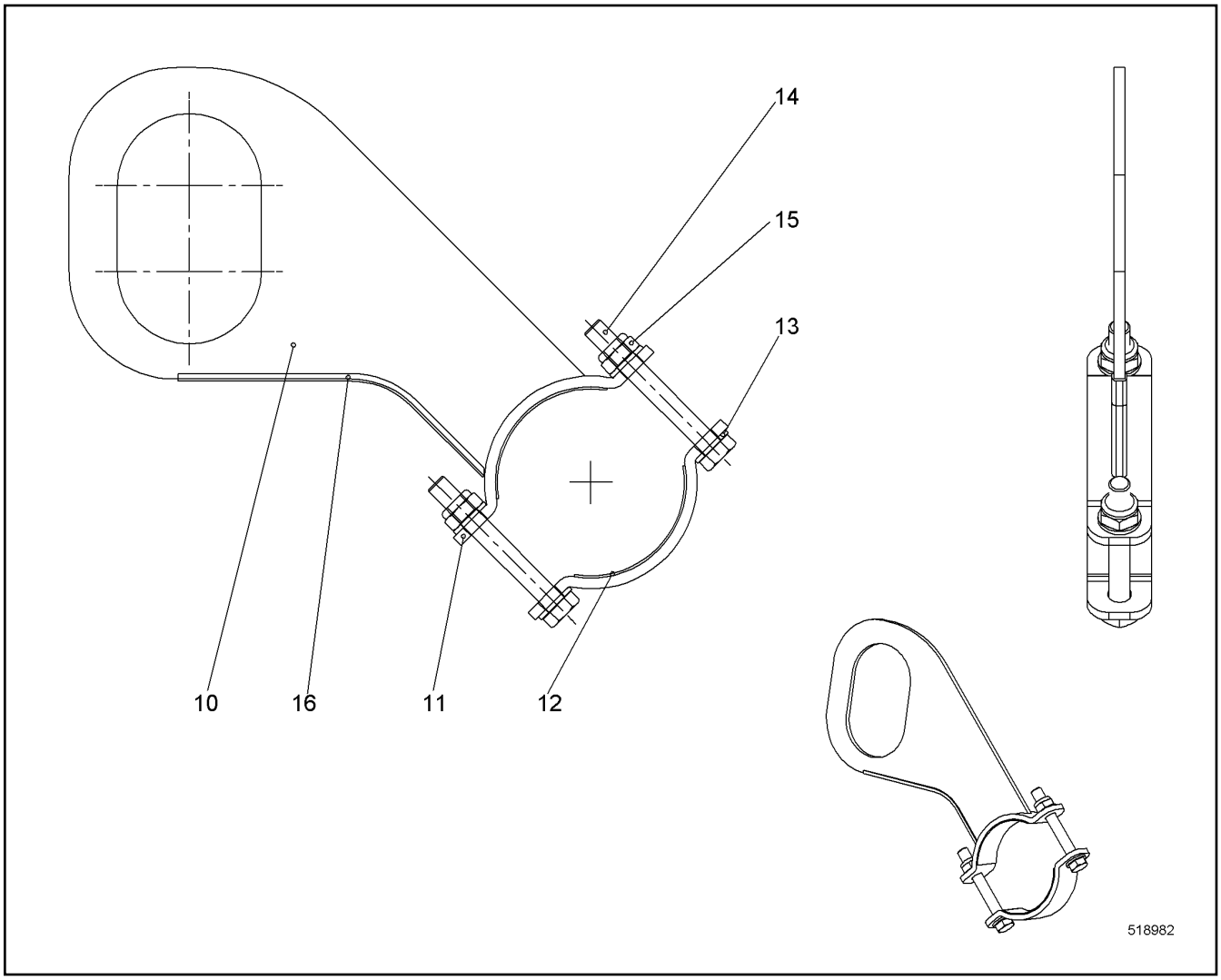

Pos.	Item	Quantity	Description	Bezeichnung	Serie	K
10	10350632	1	FASTENER	HALTERUNG		
11	10336774	2	CLAMP	SCHELLE		
12	10535526	2	RUBBER	GUMMI		
13	420001114	4	WASHER ISO 7089 10 A4	SCHEIBE		
14	406527914	2	HEX SCREW ISO 4017 M10X80 A4-70	SECHSKANTSCHRAUBE		
15	10540494	2	HEX NUT ISO 10511 M10 A4	SECHSKANTMUTTER		
16	262103101	0.16	FLEXIBLE EDGE PROTECTOR	KANTENSCHUTZ FLEXIBEL		

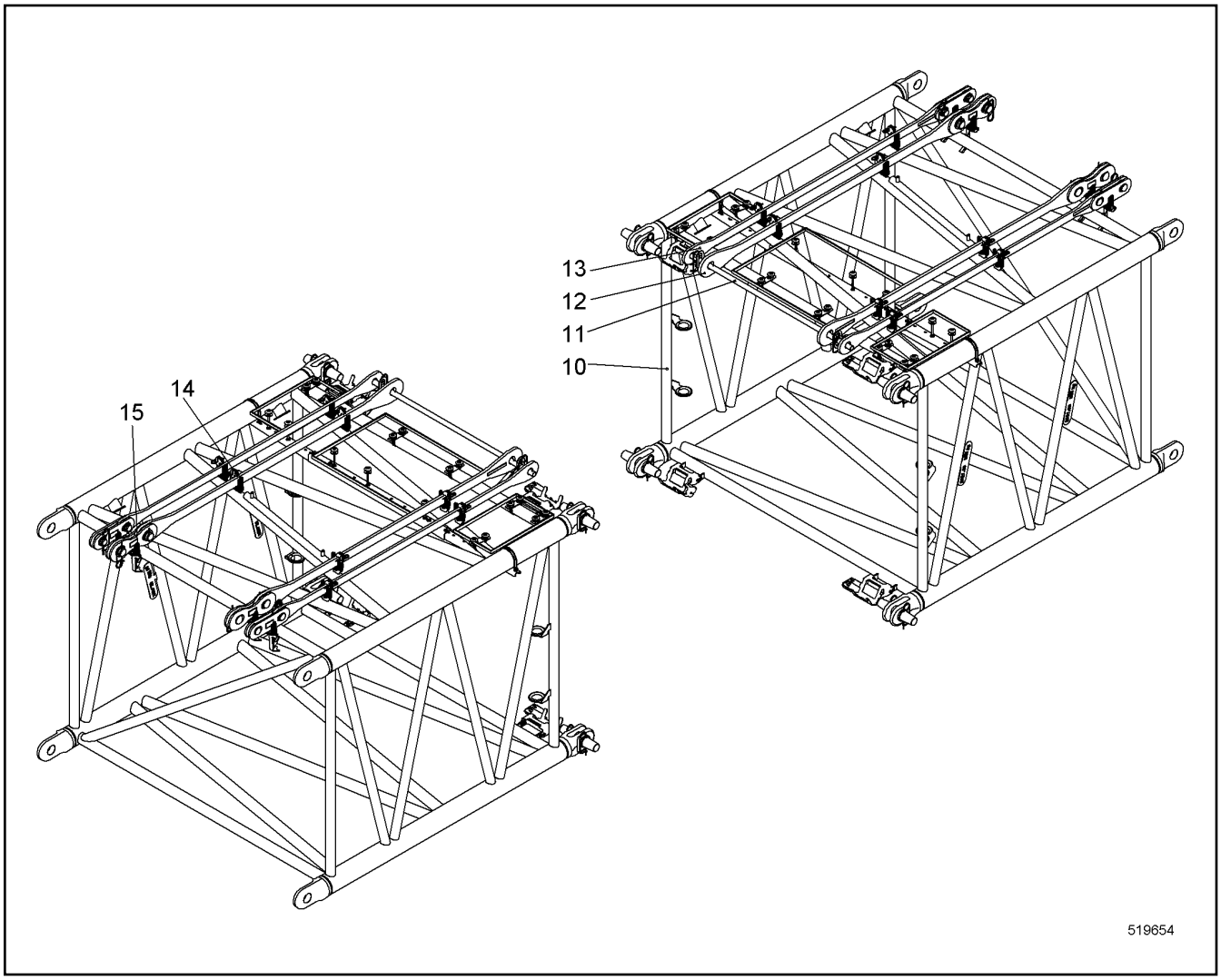

Pos.	Item	Quantity	Description	Bezeichnung	Serie	K
10	11245703	1	BOOM INTERMEDIATE SECTION CPL ⇨ ❑ 482	AL ZWISCHENSTUECK KPL		
11	11287946	1	TRANSPORT LASHING ⇨ ❑ 491	TRANSPORTSICHERUNG		
12	992440414	1	ANCHORING ROD CPL ⇨ ❑ 492	HALTESTANGE KPL		
13	918591014	1	ANCHORING ROD CPL ⇨ ❑ 493	HALTESTANGE KPL		
14	11232907	8	SUPPORT CPL ⇨ ❑ 494	AUFLAGE KPL		
15	11232922	4	SUPPORT CPL ⇨ ❑ 495	AUFLAGE KPL		

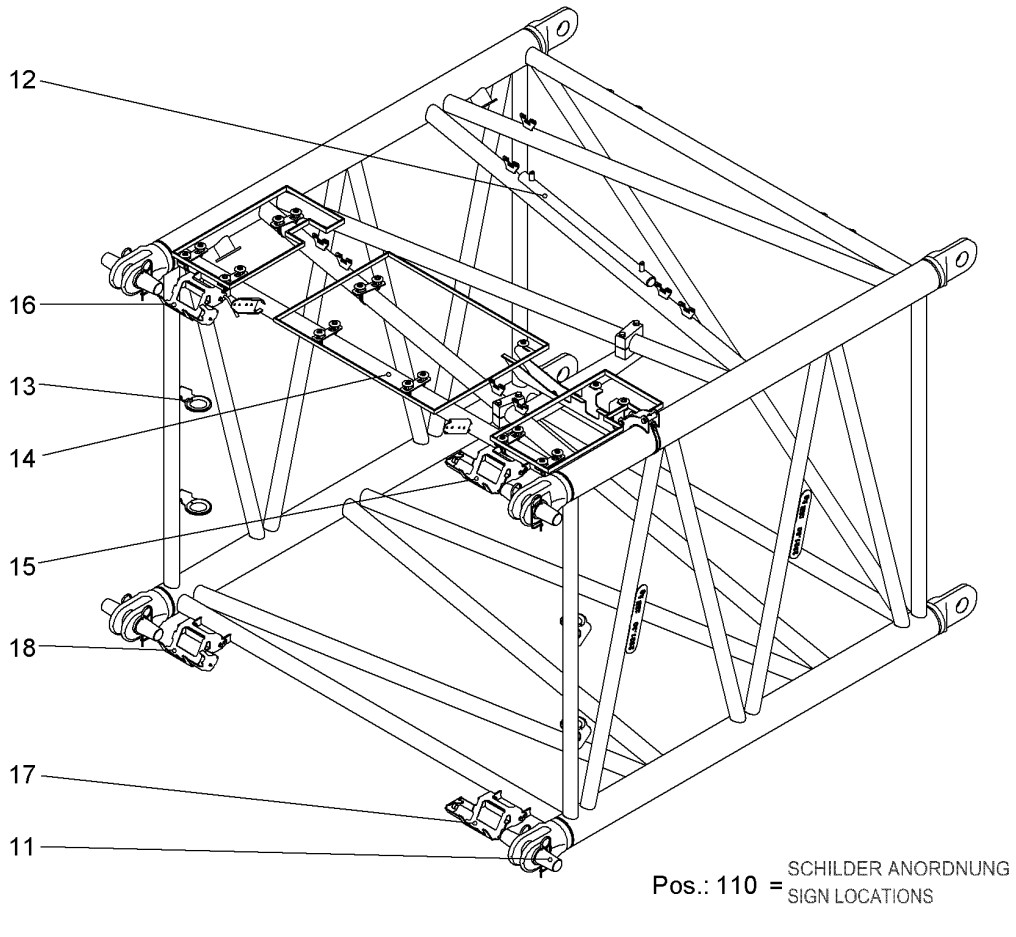

Pos.	Item	Quantity	Description	Bezeichnung	Serie	K
11	11287264	4	PIN CPL ⇨ ❑ 483	BOLZEN KPL		
12	11287255	1	ROPE GUARD CPL ⇨ ❑ 484	SEILSCHUTZ KPL		
13	226017802	1.132	EDGE PROTECTION METER WARE	KANTENSCHUTZ METERWARE		
14	11283908	1	BOOM ACCESS ⇨ ❑ 485	AL BEGEHUNG		
15	11283977	1	SUMP PAN CPL ⇨ ❑ 487	AUFFANGWANNE KPL		
16	11283978	1	SUMP PAN CPL ⇨ ❑ 488	AUFFANGWANNE KPL		
17	11283995	1	SUMP PAN CPL ⇨ ❑ 489	AUFFANGWANNE KPL		
18	11283997	1	SUMP PAN CPL ⇨ ❑ 490	AUFFANGWANNE KPL		
110	11266901	1	SIGN LOCATIONS	SCHILDER ANORD		

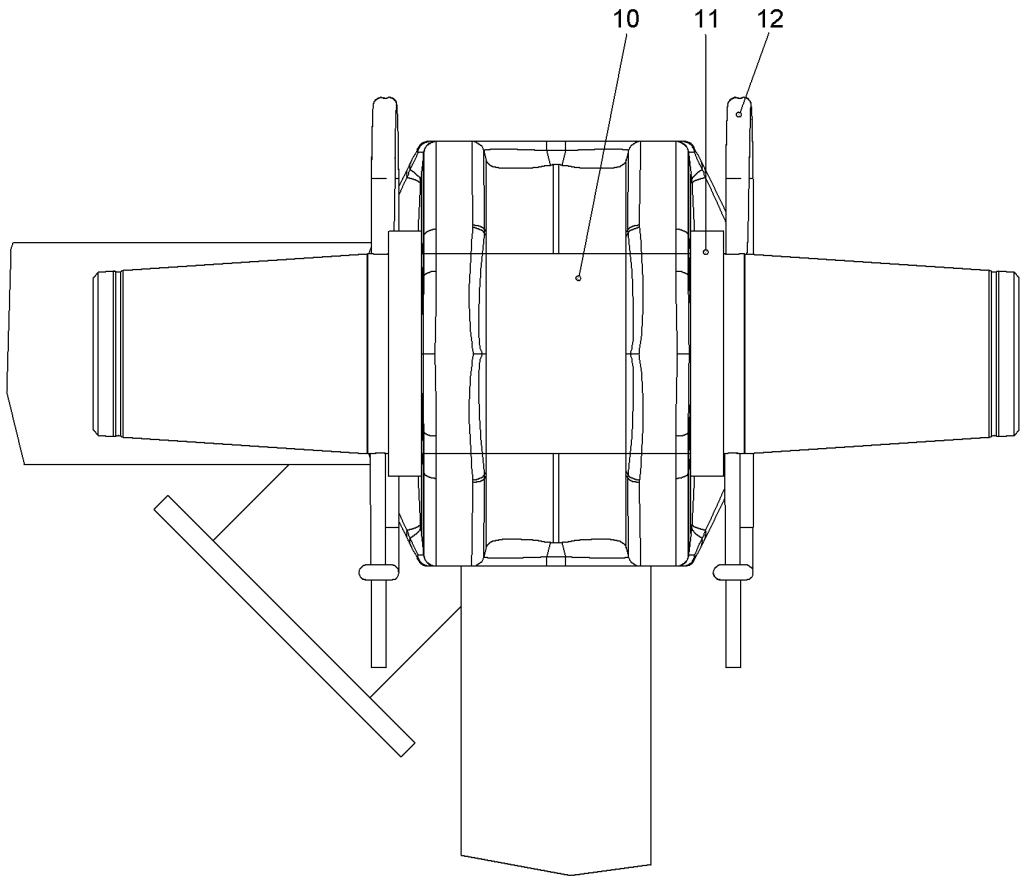

Pos.	Item	Quantity	Description	Bezeichnung	Serie	K
10	950581614	1	PIN 80X371 LHRD900-40;10019758	BOLZEN		
11	421103814	2	WASHER DIN EN 28738 80 ST;	SCHEIBE		
12	433105008	2	RETAINING SPRING DIN 2194 6MM FS	SICHERUNGSFEDER		

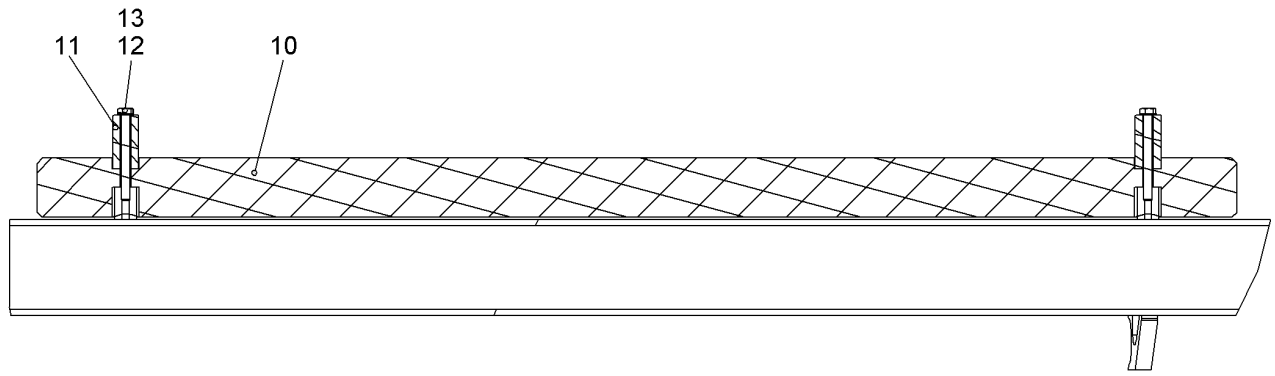

519162

Pos.	Item	Quantity	Description	Bezeichnung	Serie	K
10	971303203	1	STRIP	LEISTE		
11	956009714	2	INTERMEDIATE PART	ZWISCHENSTUECK		
12	10558857	2	LOCKING RING 8 A2	SICHERUNGSRING		
13	10538809	2	HEX SCREW ISO 4017 M8X80 A4-70	SECHSKANTSCHRAUBE		

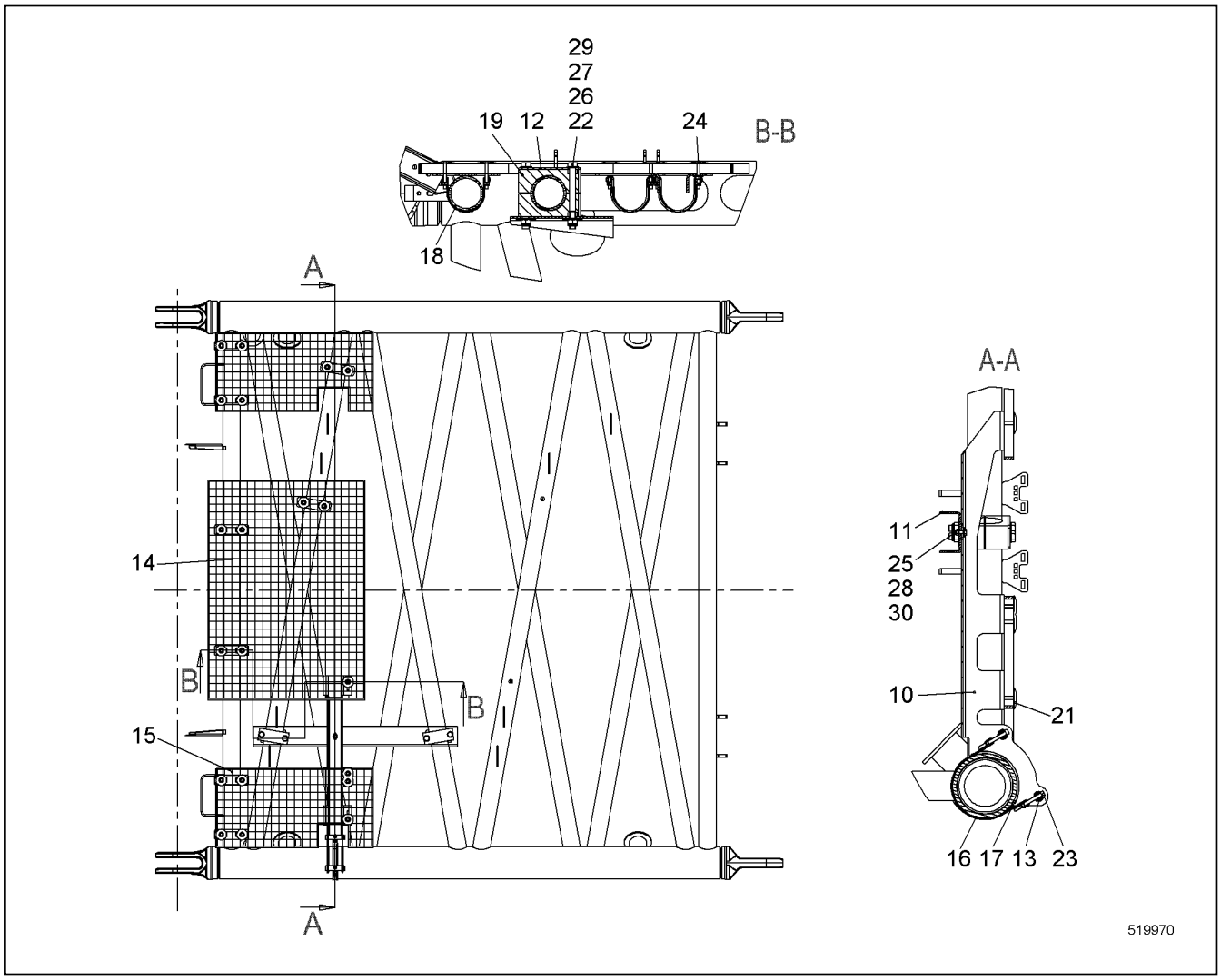

Pos.	Item	Quantity	Description	Bezeichnung	Serie	K
10	11311241	1	PLATE	BLECH		
11	11311262	1	PLATE	BLECH		
12	11310952	2	PLATE	BLECH		
13	11310955	2	AXLE	ACHSE		
14	10530418	1	GRATING	GITTERROST		
15	11311245	2	GRATING	GITTERROST		
16	10531873	1	TIGHTENING STRAP HINGE PIN	GELENKBOLZENSPANNBAND		
17	10352462	0.422	FLEXIBLE EDGE PROTECTOR	KANTENSCHUTZ FLEXIBEL		
18	11283913	8	FIXING CLAMP ⇨ ❑ 486	BEFESTIGUNGSCHELLE		
19	602017114	4	CLAMP-HALF	KLEMMHAELFTE		
21	10098157	3	DISH	TELLER		
22	10543975	4	HEX SCREW ISO 4014 M16X160 10.9	SECHSKANTSCHRAUBE		
23	10539492	2	SOCKET HEAD SCREW ISO 4762 M8X80 A4-7	ZYLINDERSCHRAUBE		
24	10538807	3	HEX SCREW ISO 4017 M8X50 A4-70	SECHSKANTSCHRAUBE		
25	406501414	1	HEX SCREW ISO 4017 M8X25 A4-70	SECHSKANTSCHRAUBE		
26	10544172	4	WASHER ISO 7089 16	SCHEIBE		
27	10544173	4	WASHER ISO 7093-1 16	SCHEIBE		
28	10540510	5	WASHER ISO 7093-1 8 A4	SCHEIBE		
29	10544155	4	HEX NUT ISO 10511 M16 10	SECHSKANTMUTTER		
30	10540493	6	HEX NUT ISO 10511 M8 A4	SECHSKANTMUTTER		

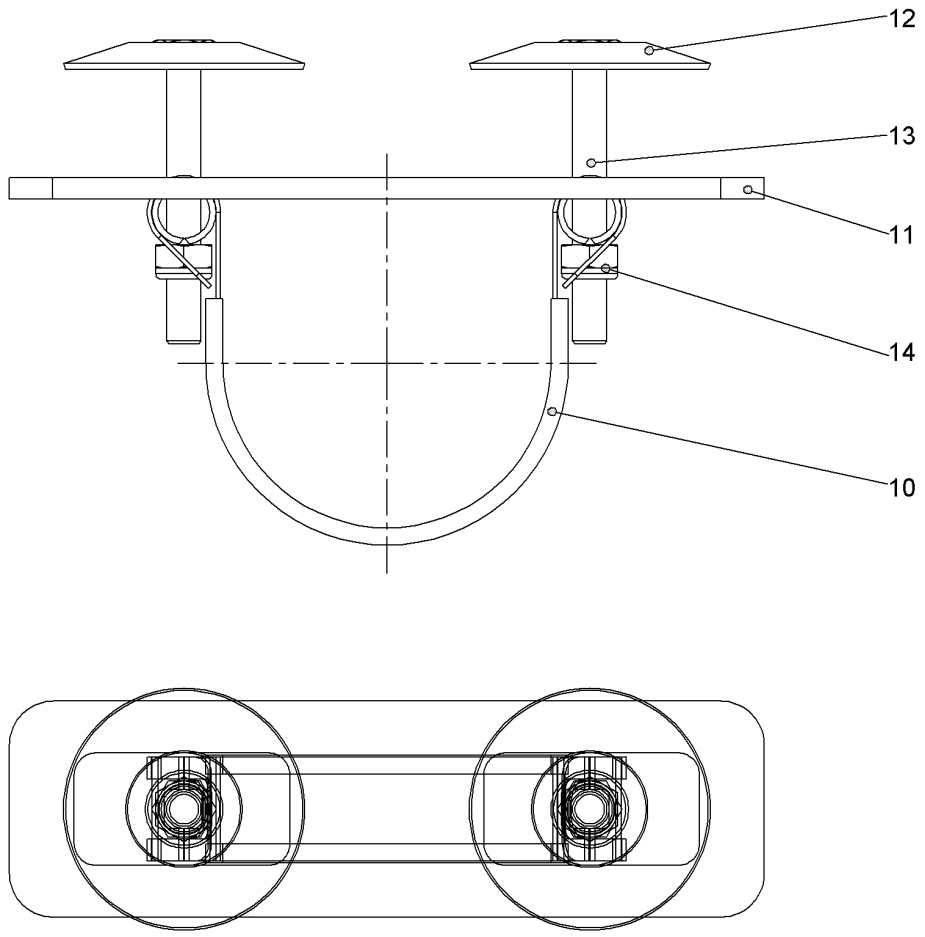

Pos.	Item	Quantity	Description	Bezeichnung	Serie	K
10	10530689	1	TIGHTENING STRAP HINGE PIN	GELENKBOLZENSPANNBAND		
11	11285382	1	RUBBER	GUMMI		
12	10098157	2	DISH	TELLER		
13	10331507	2	HEX SCREW ISO 4017 M8X65 A4-70	SECHSKANTSCHRAUBE		
14	10540493	2	HEX NUT ISO 10511 M8 A4	SECHSKANTMUTTER		

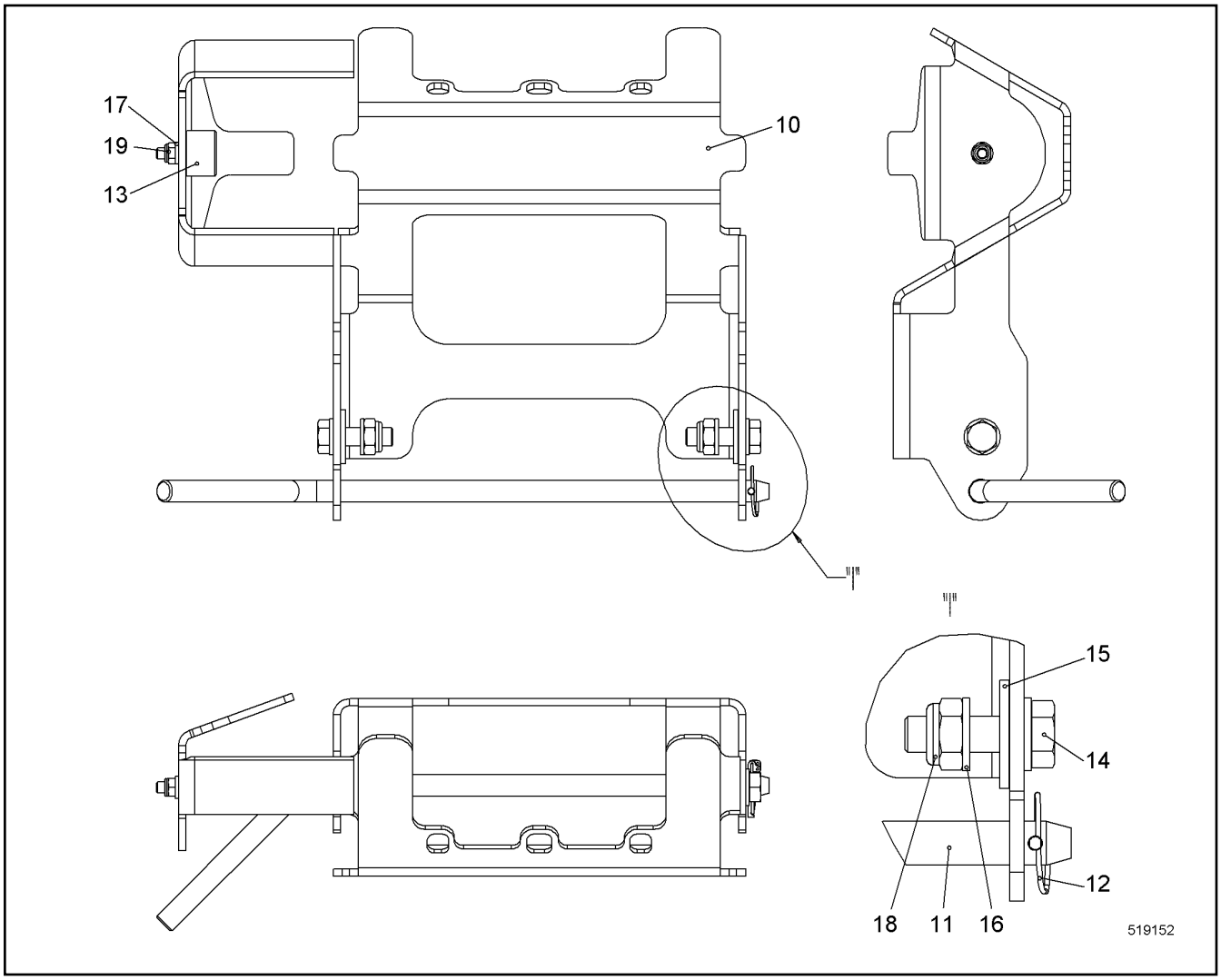

Pos.	Item	Quantity	Description	Bezeichnung	Serie	K
10	10349599	1	SUPPORT SHEET	AUFLAGEBLECH		
11	950490414	1	PLUG	STECKER		
12	485565814	1	SAFETY PLUG W HINGE-LID 4X27	SICHERHEITSKLAPPSTECKER		
13	726612214	1	RUBBER MOUNT	LAGER GUMMI		
14	406509314	2	HEX SCREW ISO 4017 M10X35 A4-70	SECHSKANTSCHRAUBE		
15	10540511	2	WASHER ISO 7093-1 10 A4	SCHEIBE		
16	420001114	4	WASHER ISO 7089 10 A4	SCHEIBE		
17	420000414	1	WASHER ISO 7089 6 A4	SCHEIBE		
18	10540494	2	HEX NUT ISO 10511 M10 A4	SECHSKANTMUTTER		
19	10540492	1	HEX NUT ISO 10511 M6 A4	SECHSKANTMUTTER		

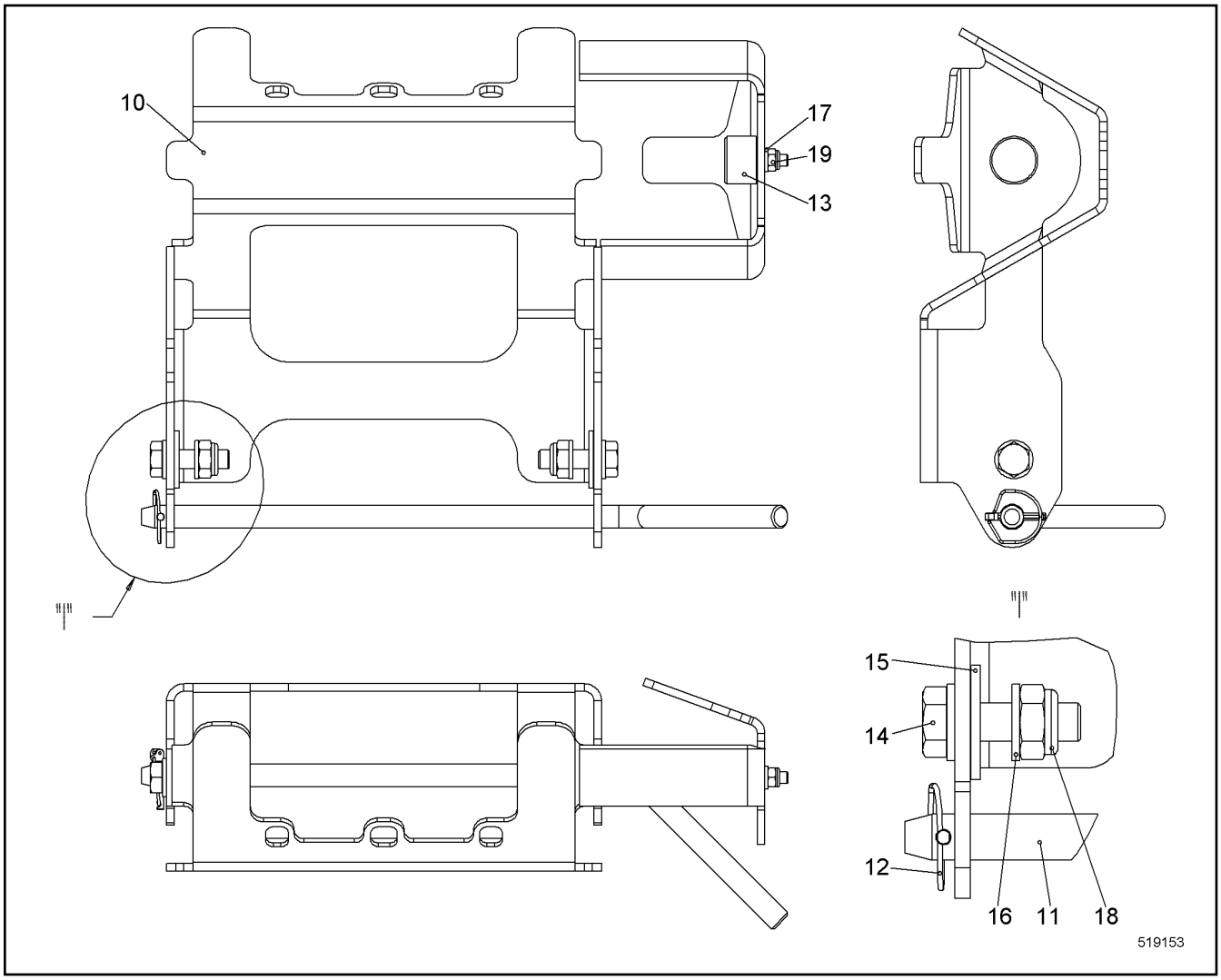

Pos.	Item	Quantity	Description	Bezeichnung	Serie	K
10	10349598	1	SUPPORT SHEET	AUFLAGEBLECH		
11	950490414	1	PLUG	STECKER		
12	485565814	1	SAFETY PLUG W HINGE-LID 4X27	SICHERHEITSKLAPPSTECKER		
13	726612214	1	RUBBER MOUNT	LAGER GUMMI		
14	406509314	2	HEX SCREW ISO 4017 M10X35 A4-70	SECHSKANTSCHRAUBE		
15	10540511	2	WASHER ISO 7093-1 10 A4	SCHEIBE		
16	420001114	4	WASHER ISO 7089 10 A4	SCHEIBE		
17	420000414	1	WASHER ISO 7089 6 A4	SCHEIBE		
18	10540494	2	HEX NUT ISO 10511 M10 A4	SECHSKANTMUTTER		
19	10540492	1	HEX NUT ISO 10511 M6 A4	SECHSKANTMUTTER		

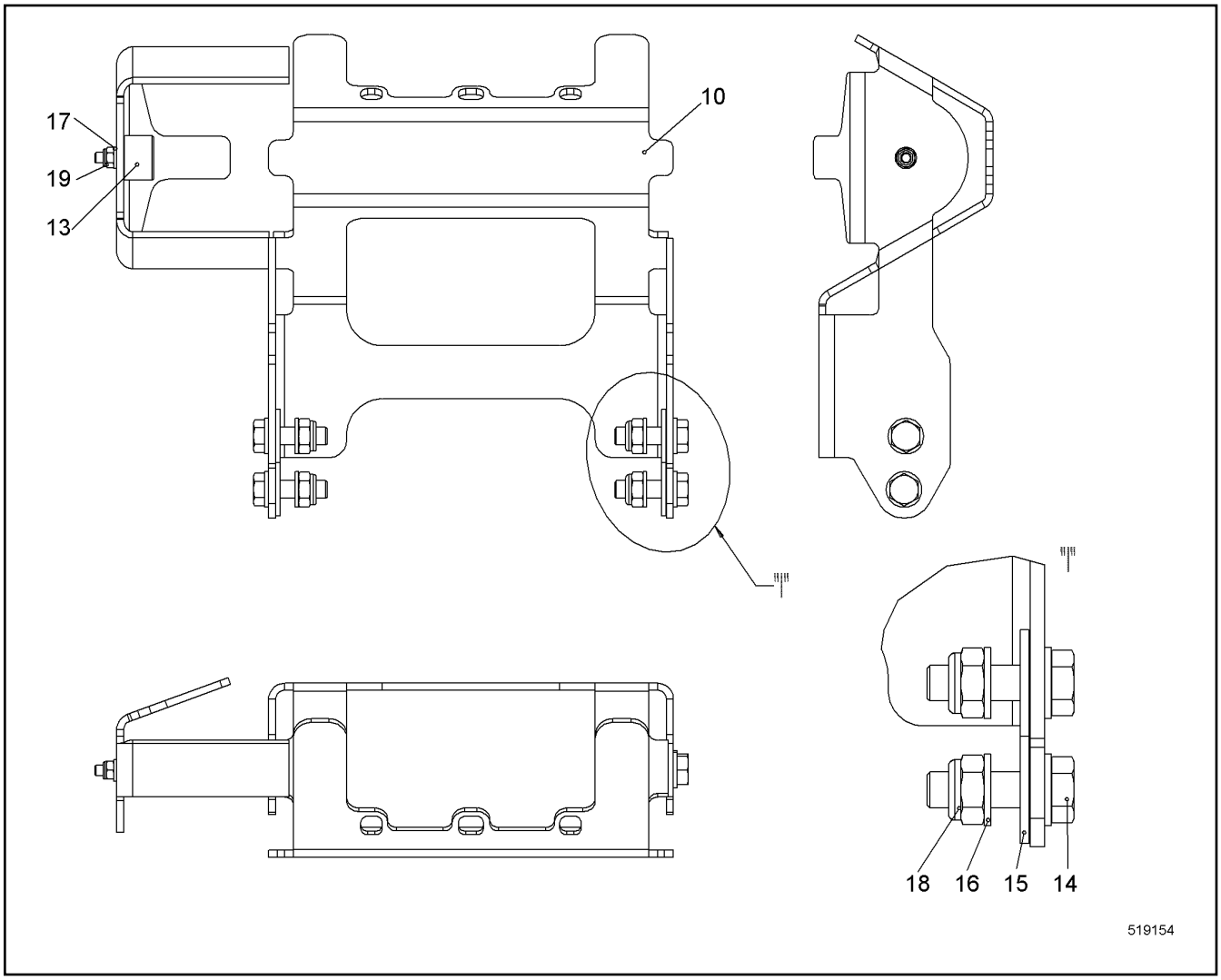

Pos.	Item	Quantity	Description	Bezeichnung	Serie	K
10	10349599	1	SUPPORT SHEET	AUFLAGEBLECH		
13	726612214	1	RUBBER MOUNT	LAGER GUMMI		
14	406509314	4	HEX SCREW ISO 4017 M10X35 A4-70	SECHSKANTSCHRAUBE		
15	10540511	4	WASHER ISO 7093-1 10 A4	SCHEIBE		
16	420001114	8	WASHER ISO 7089 10 A4	SCHEIBE		
17	420000414	1	WASHER ISO 7089 6 A4	SCHEIBE		
18	10540494	4	HEX NUT ISO 10511 M10 A4	SECHSKANTMUTTER		
19	10540492	1	HEX NUT ISO 10511 M6 A4	SECHSKANTMUTTER		

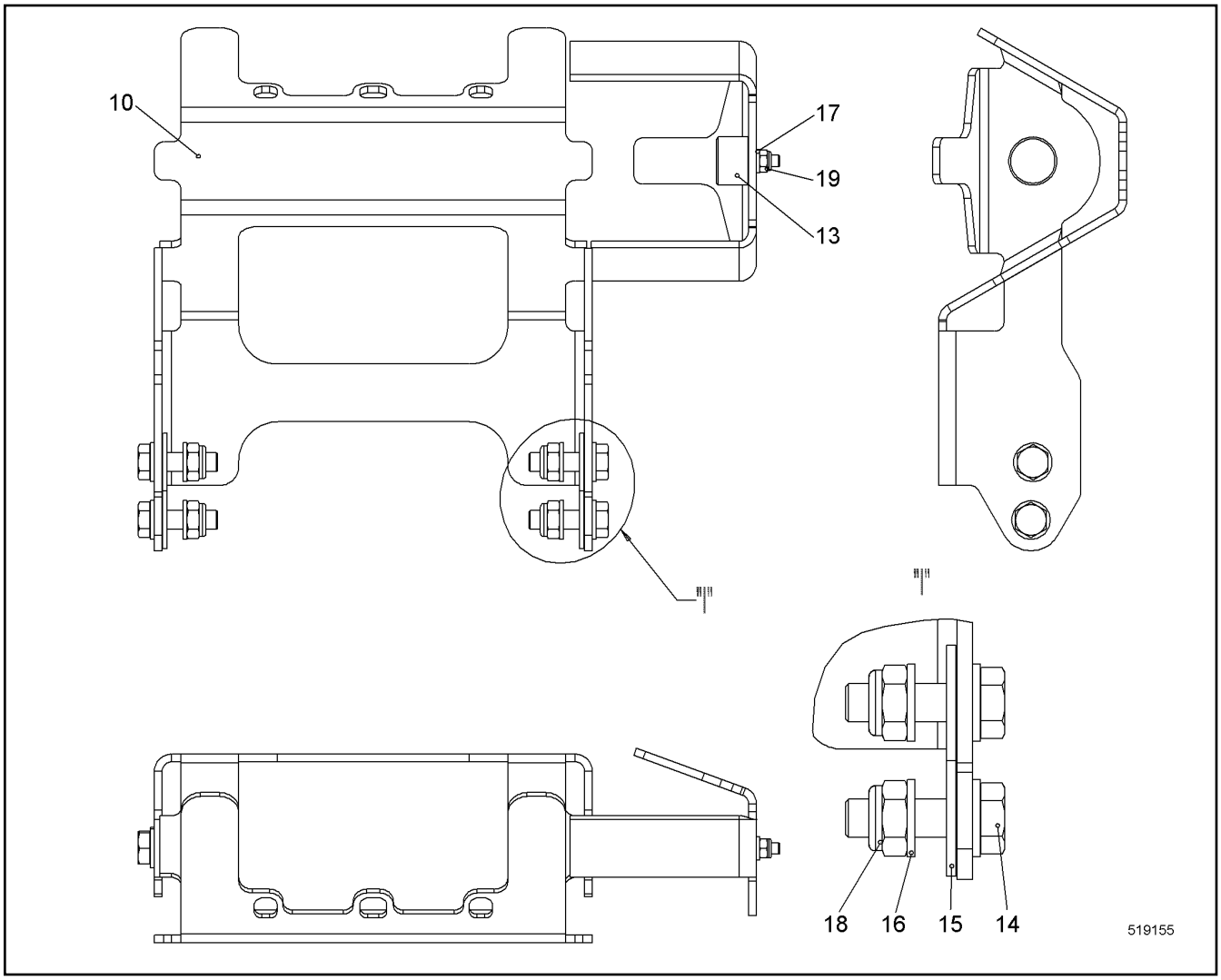

Pos.	Item	Quantity	Description	Bezeichnung	Serie	K
10	10349598	1	SUPPORT SHEET	AUFLAGEBLECH		
13	726612214	1	RUBBER MOUNT	LAGER GUMMI		
14	406509314	4	HEX SCREW ISO 4017 M10X35 A4-70	SECHSKANTSCHRAUBE		
15	10540511	4	WASHER ISO 7093-1 10 A4	SCHEIBE		
16	420001114	8	WASHER ISO 7089 10 A4	SCHEIBE		
17	420000414	1	WASHER ISO 7089 6 A4	SCHEIBE		
18	10540494	4	HEX NUT ISO 10511 M10 A4	SECHSKANTMUTTER		
19	10540492	1	HEX NUT ISO 10511 M6 A4	SECHSKANTMUTTER		

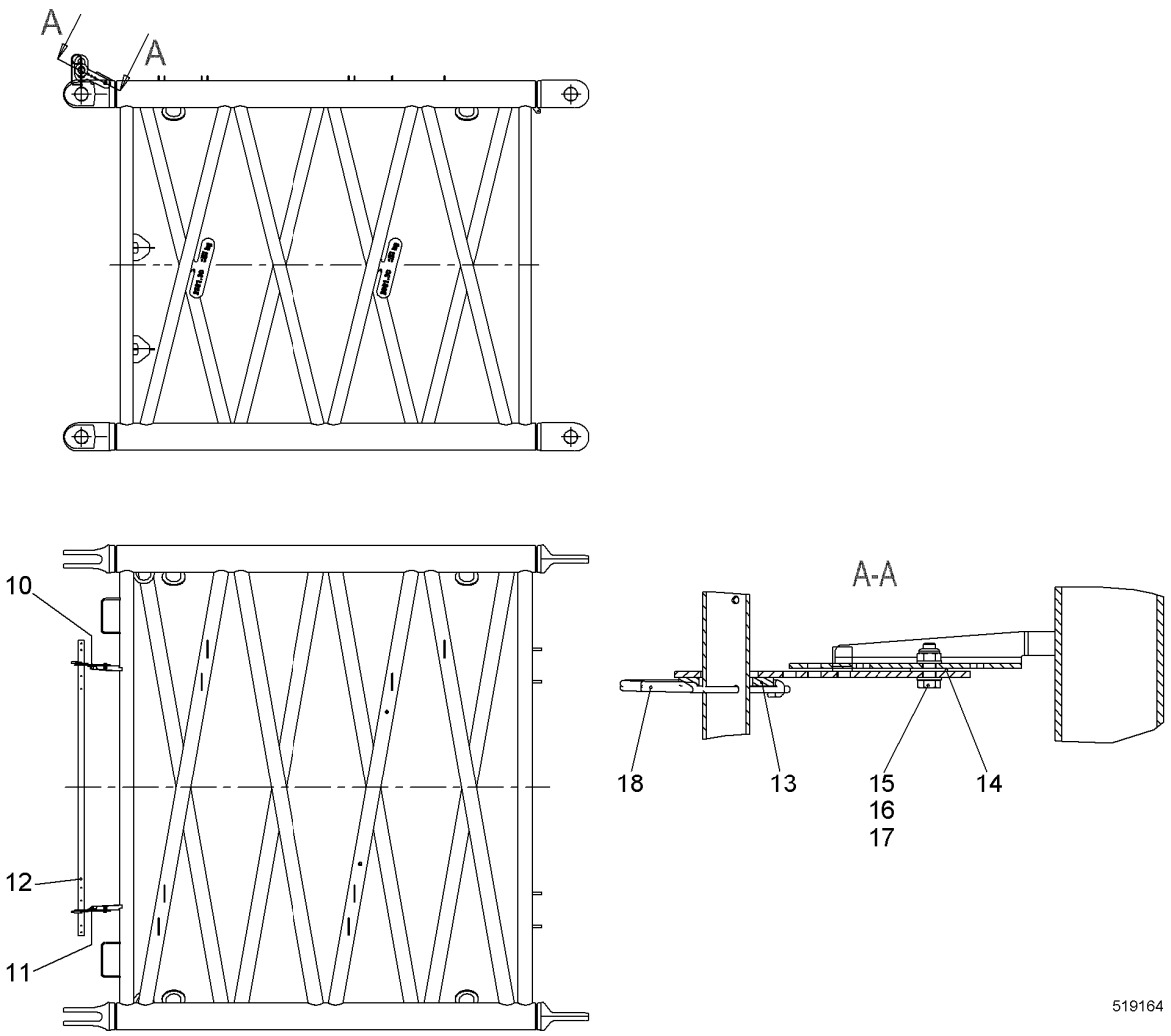

Pos.	Item	Quantity	Description	Bezeichnung	Serie	K
10	11243383	1	RETAINING PLATE	HALTEBLECH		
11	11285055	1	RETAINING PLATE	HALTEBLECH		
12	289057714	1	TUBE	ROHR		
13	420003714	2	WASHER ISO 7089 42	SCHEIBE		
14	485568514	2	WASHER DIN 34816 10.5 PA 6.6	SCHEIBE		
15	420001114	4	WASHER ISO 7089 10 A4	SCHEIBE		
16	406511614	2	HEX SCREW ISO 4017 M10X30 A4-70	SECHSKANTSCHRAUBE		
17	10540494	2	HEX NUT ISO 10511 M10 A4	SECHSKANTMUTTER		
18	433102508	2	RETAINING SPRING 5MM	SICHERUNGSFEDER		

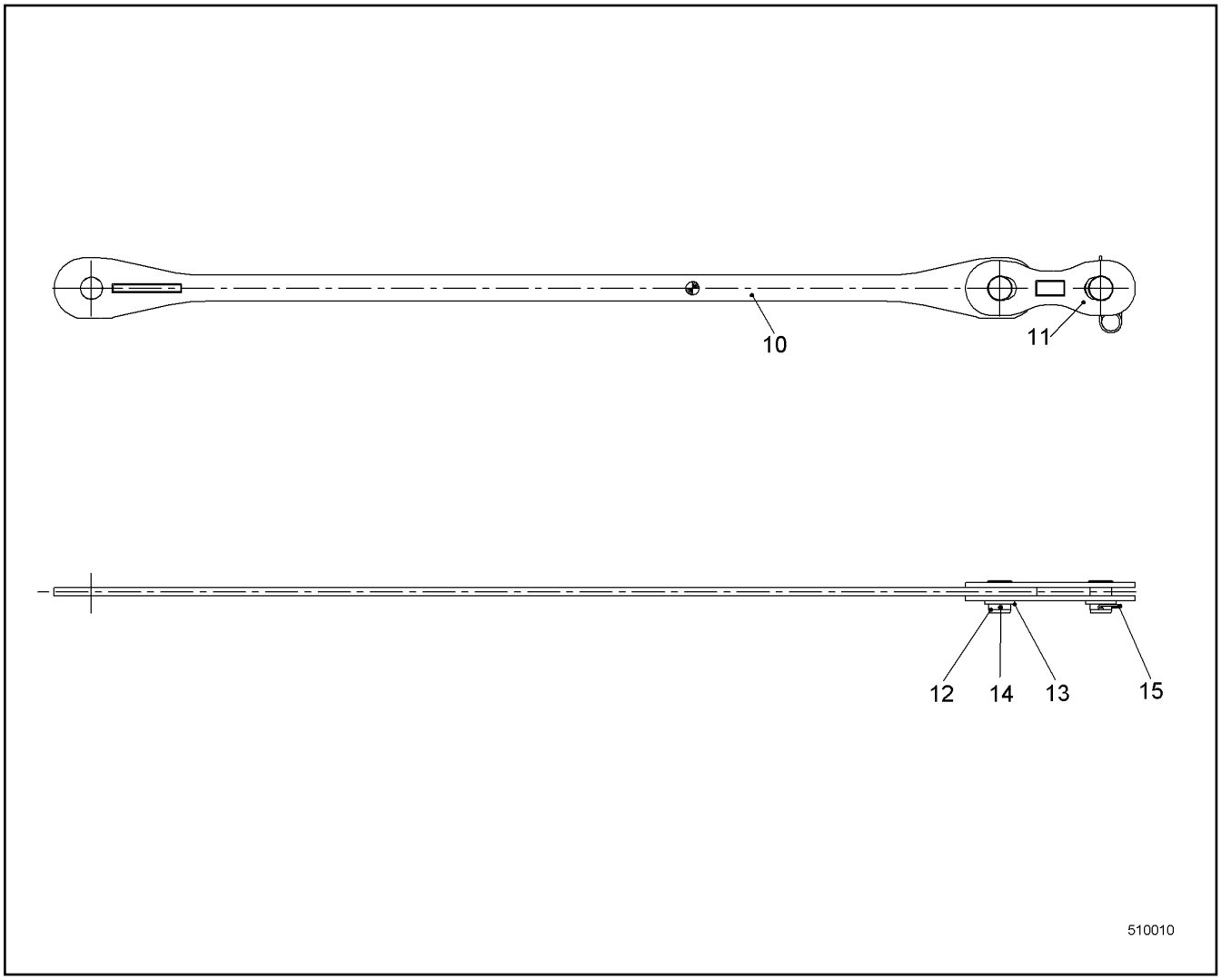

Pos.	Item	Quantity	Description	Bezeichnung	Serie	K
10	10226400	2	ANCHORING ROD	HALTESTANGE		
11	10226402	4	COUPLING LINK	KOPPELLASCHE		
12	959575714	4	PIN 73X95 LHRD900-40;10019758	BOLZEN		
13	421103614	4	WASHER DIN EN 28738 65 ST;	SCHEIBE		
14	433009514	2	SPLIT PIN ISO 1234 8X100 A4	SPLINT		
15	433105008	2	RETAINING SPRING DIN 2194 6MM FS	SICHERUNGSFEDER		

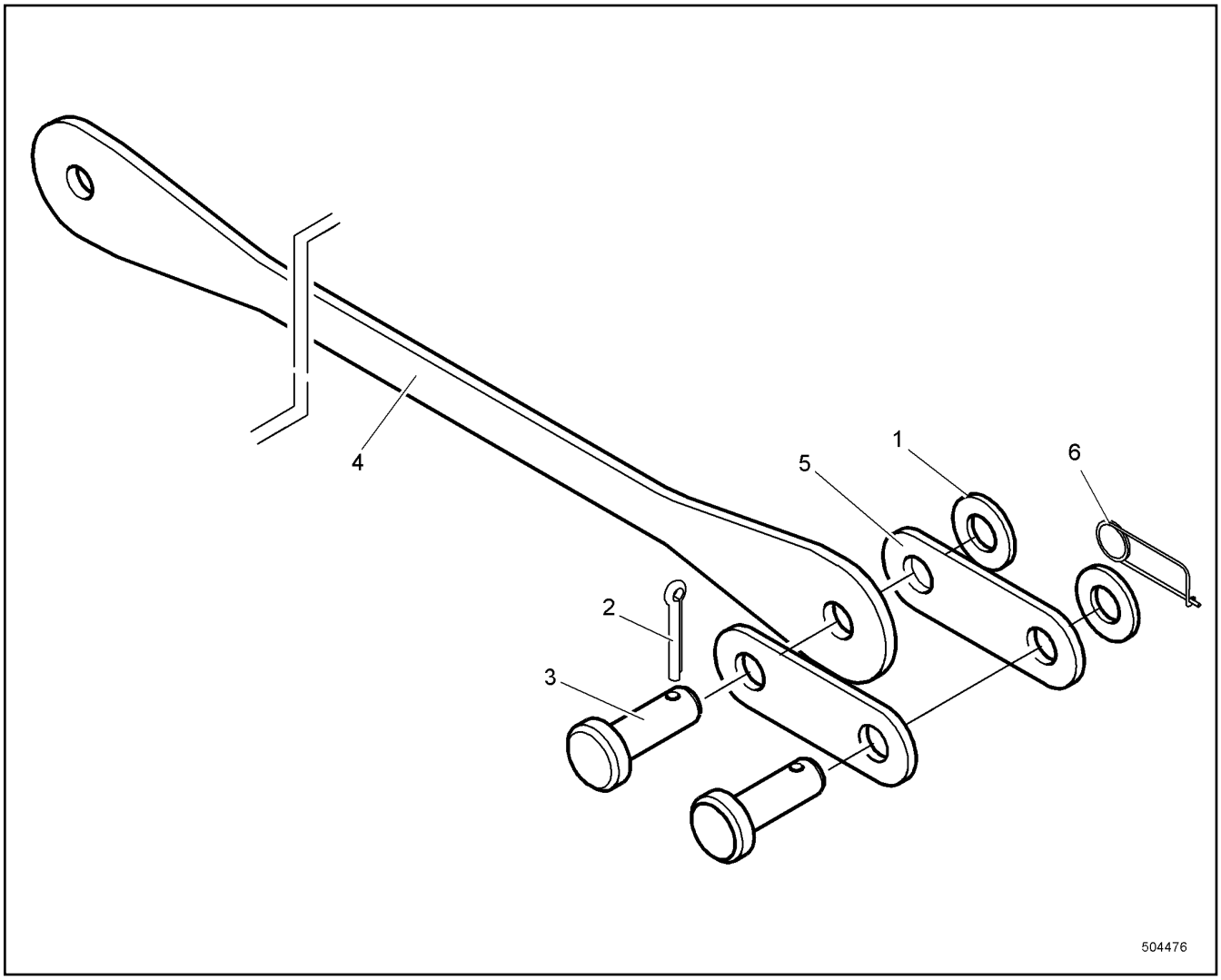

Pos.	Item	Quantity	Description	Bezeichnung	Serie	K
1	421103414	4	WASHER DIN EN 28738 55 ST;	SCHEIBE		
2	433010314	2	SPLIT PIN ISO 1234 10X80 A4	SPLINT		
3	949196614	4	PIN 63X95 LHRD900-40;10019758	BOLZEN		
4	949910714	2	ANCHORING ROD	HALTESTANGE		
5	949911014	4	COUPLING LINK	KOPPELLASCHE		
6	433105008	2	RETAINING SPRING DIN 2194 6MM FS	SICHERUNGSFEDER		
7	949942814	8	WASHER 58/90X2 GUMMI NBR/SBR-65 GRD	SCHEIBE		

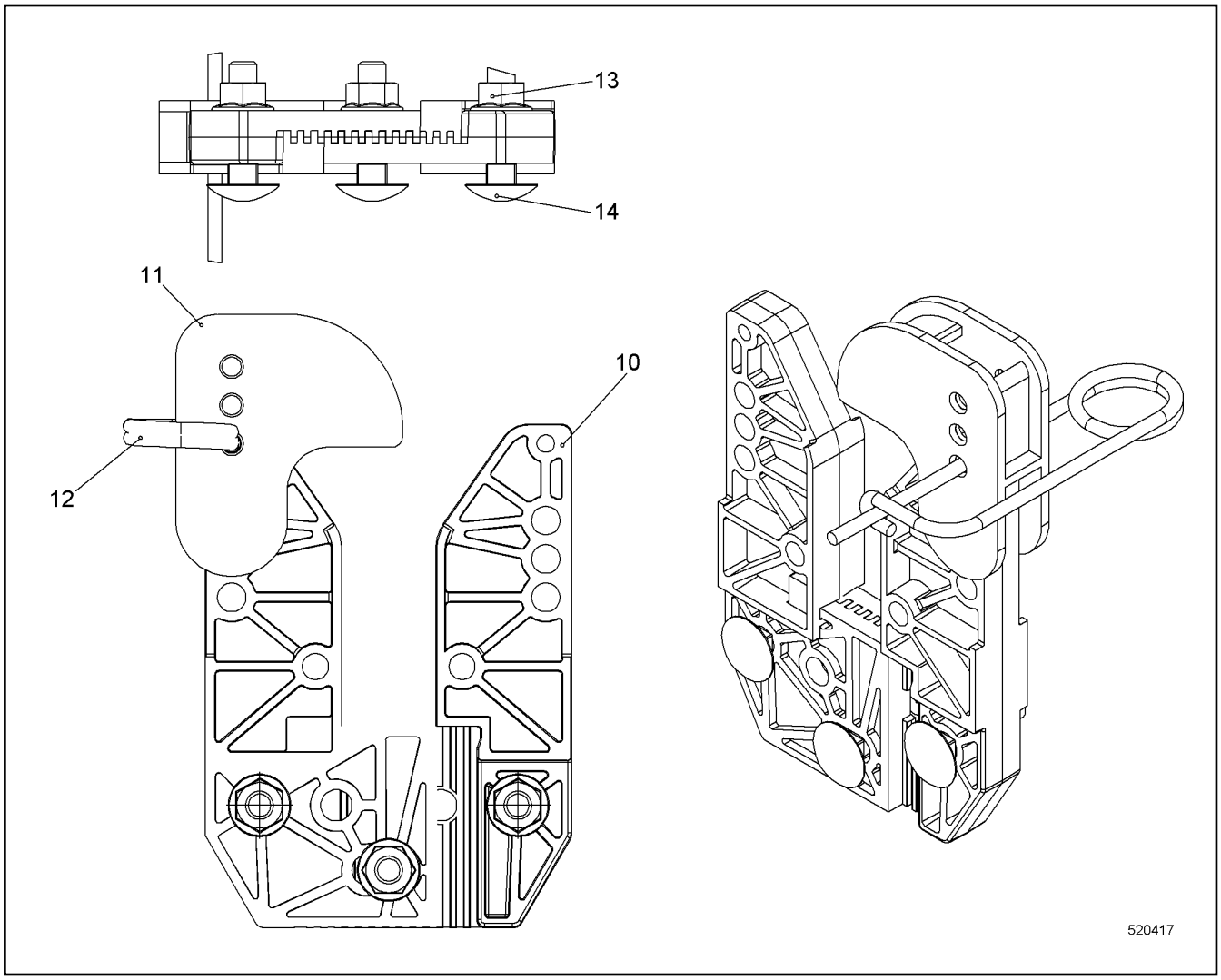

Pos.	Item	Quantity	Description	Bezeichnung	Serie	K
10	11219265	2	SUPPORT	AUFLAGE		
11	11219856	1	CLOSURE CAP	VERSCHLUSSKLAPPE		
12	433101208	1	RETAINING SPRING 4MM	SICHERUNGSFEDER		
13	11314341	3	HEX NUT DIN EN 1663 M8 A4	SECHSKANTMUTTER		
14	11314349	3	CHEESE HEAD SCREW DIN 603 M8X35 A4-70	FLACHRUNDSCHRAUBE		

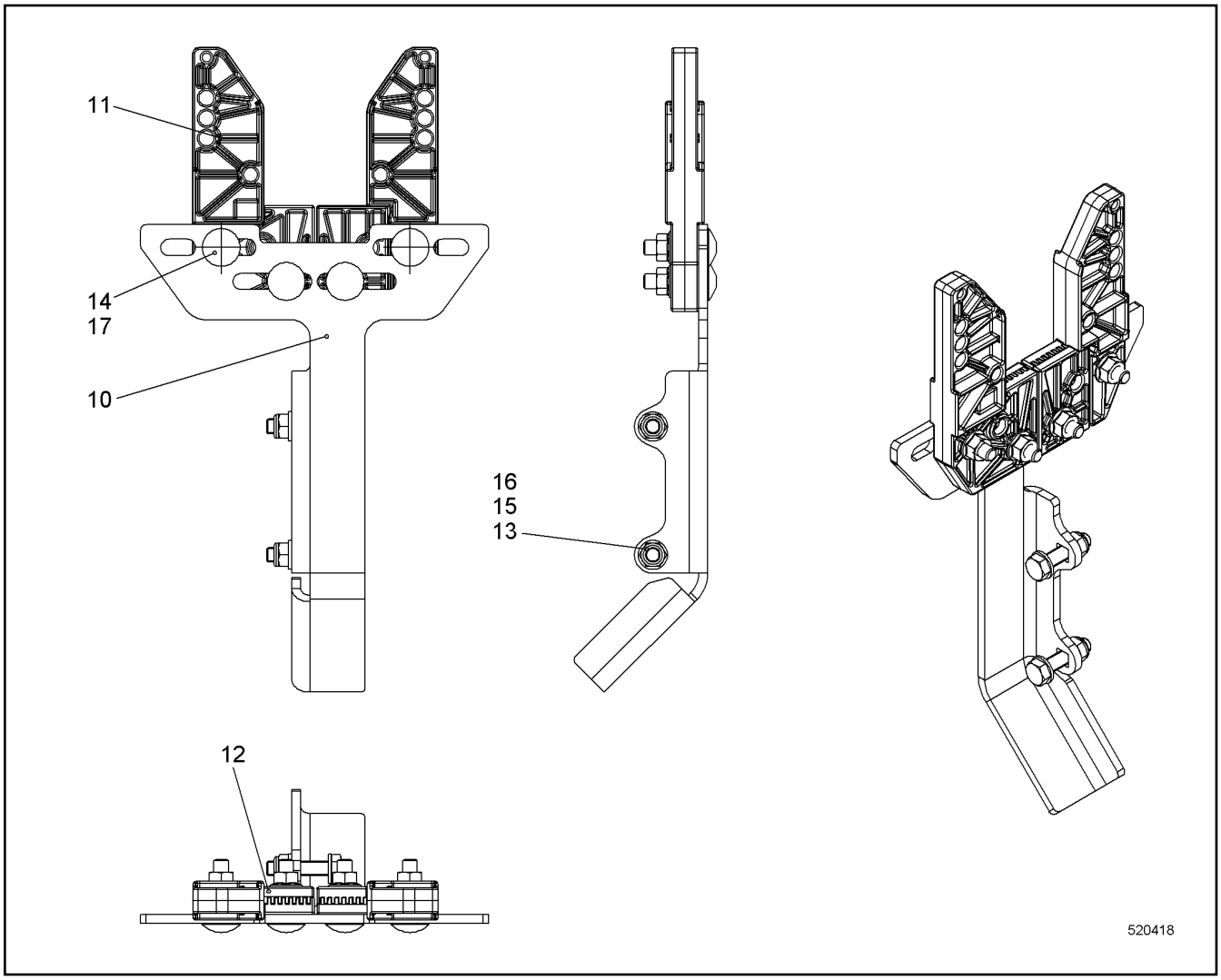

Pos.	Item	Quantity	Description	Bezeichnung	Serie	K
10	11219861	1	FASTENING BRACKET	BEF BUEGEL		
11	11219265	2	SUPPORT	AUFLAGE		
12	11219851	2	SHEET	PLATTE		
13	406517614	2	HEX SCREW ISO 4017 M8X35 A4-70	SECHSKANTSCHRAUBE		
14	11314349	4	CHEESE HEAD SCREW DIN 603 M8X35 A4-70	FLACHRUNDSCHRAUBE		
15	420001014	4	WASHER ISO 7089 8 A4	SCHEIBE		
16	10540493	2	HEX NUT ISO 10511 M8 A4	SECHSKANTMUTTER		
17	11314341	4	HEX NUT DIN EN 1663 M8 A4	SECHSKANTMUTTER		

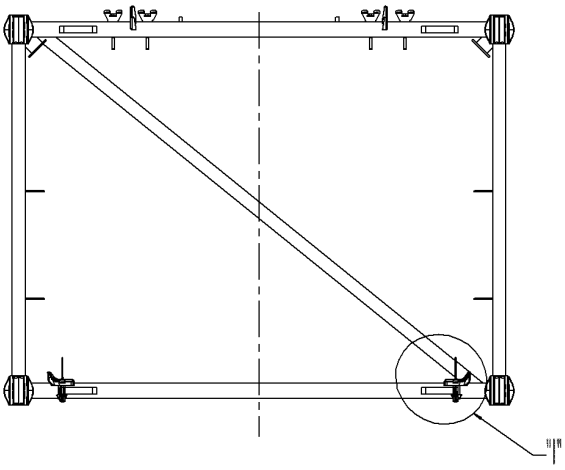

Pos.	Item	Quantity	Description	Bezeichnung	Serie	K
10	992958814	6	SUPPORT ⇨ ❑ 479	AUFLAGE		
11	10350633	2	FASTENER ⇨ ❑ 480	HALTERUNG		

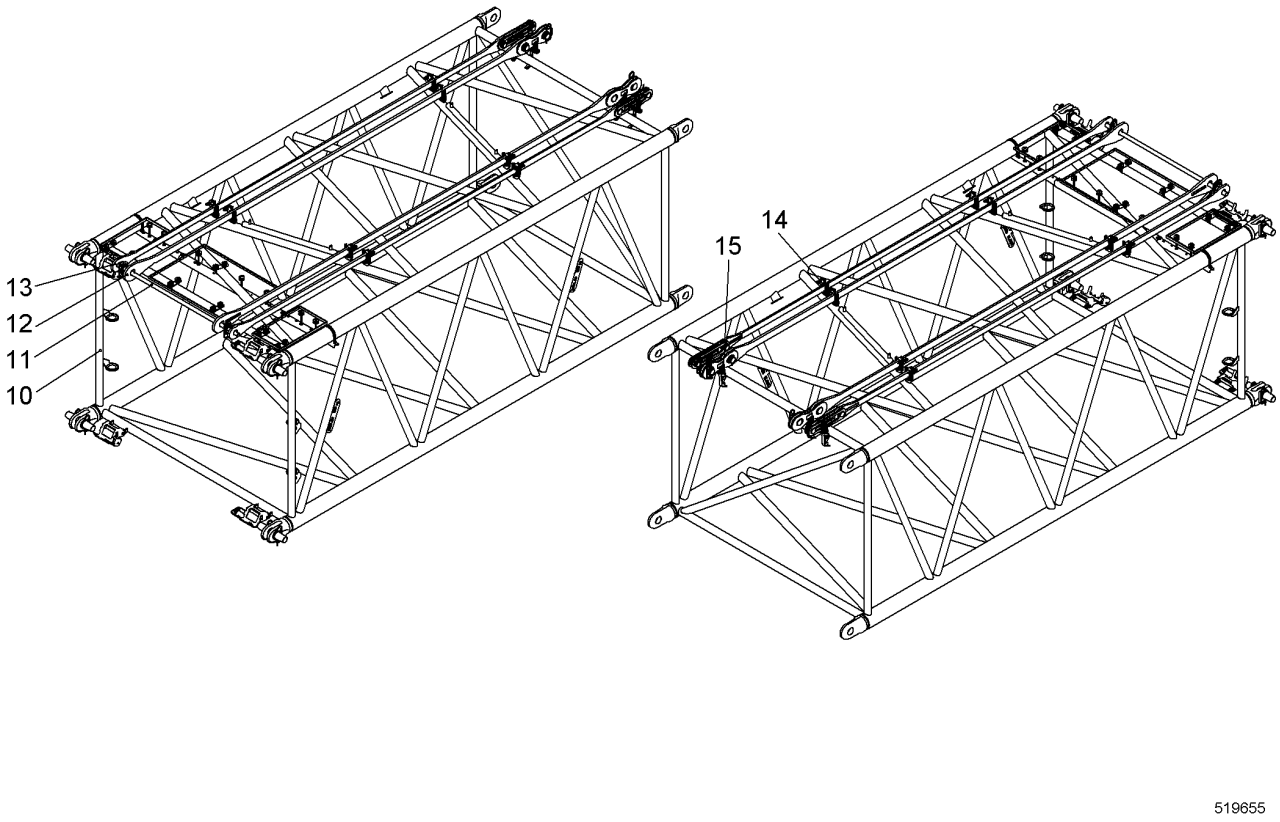

Pos.	Item	Quantity	Description	Bezeichnung	Serie	K
10	11245709	1	BOOM INTERMEDIATE SECTION CPL ⇨ ❑ 498	AL ZWISCHENSTUECK KPL		
11	11287946	1	TRANSPORT LASHING ⇨ ❑ 491	TRANSPORTSICHERUNG		
12	992440514	1	ANCHORING ROD CPL ⇨ ❑ 500	HALTESTANGE KPL		
13	918591114	1	ANCHORING ROD CPL ⇨ ❑ 501	HALTESTANGE KPL		
14	11232907	8	SUPPORT CPL ⇨ ❑ 494	AUFLAGE KPL		
15	11232922	4	SUPPORT CPL ⇨ ❑ 495	AUFLAGE KPL		

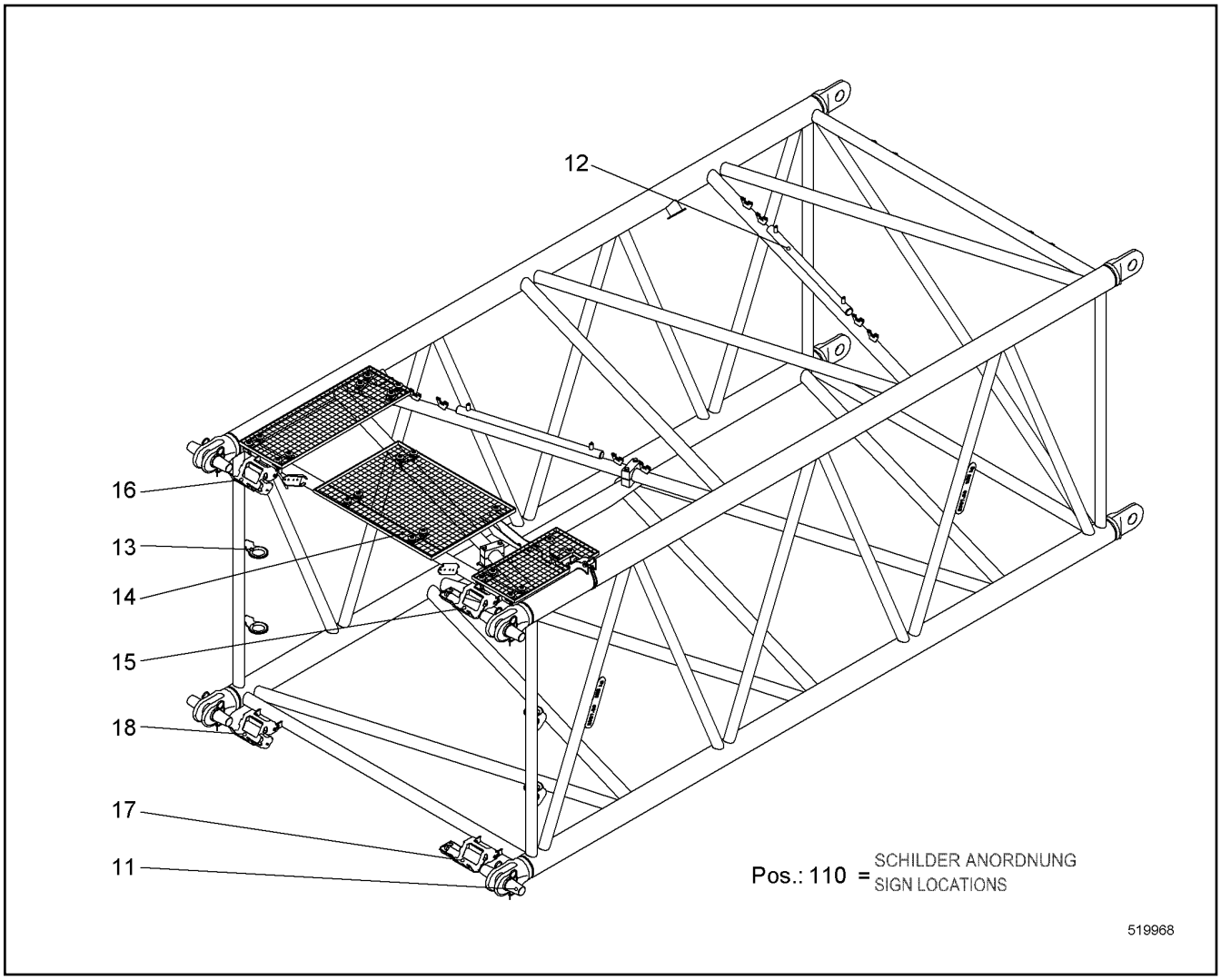

Pos.	Item	Quantity	Description	Bezeichnung	Serie	K
11	11287264	4	PIN CPL ⇨ ❑ 483	BOLZEN KPL		
12	11287255	2	ROPE GUARD CPL ⇨ ❑ 484	SEILSCHUTZ KPL		
13	226017802	1.132	EDGE PROTECTION METER WARE	KANTENSCHUTZ METERWARE		
14	11285838	1	BOOM ACCESS ⇨ ❑ 499	AL BEGEHUNG		
15	11283977	1	SUMP PAN CPL ⇨ ❑ 487	AUFFANGWANNE KPL		
16	11283978	1	SUMP PAN CPL ⇨ ❑ 488	AUFFANGWANNE KPL		
17	11283995	1	SUMP PAN CPL ⇨ ❑ 489	AUFFANGWANNE KPL		
18	11283997	1	SUMP PAN CPL ⇨ ❑ 490	AUFFANGWANNE KPL		
110	11266901	1	SIGN LOCATIONS	SCHILDER ANORD		

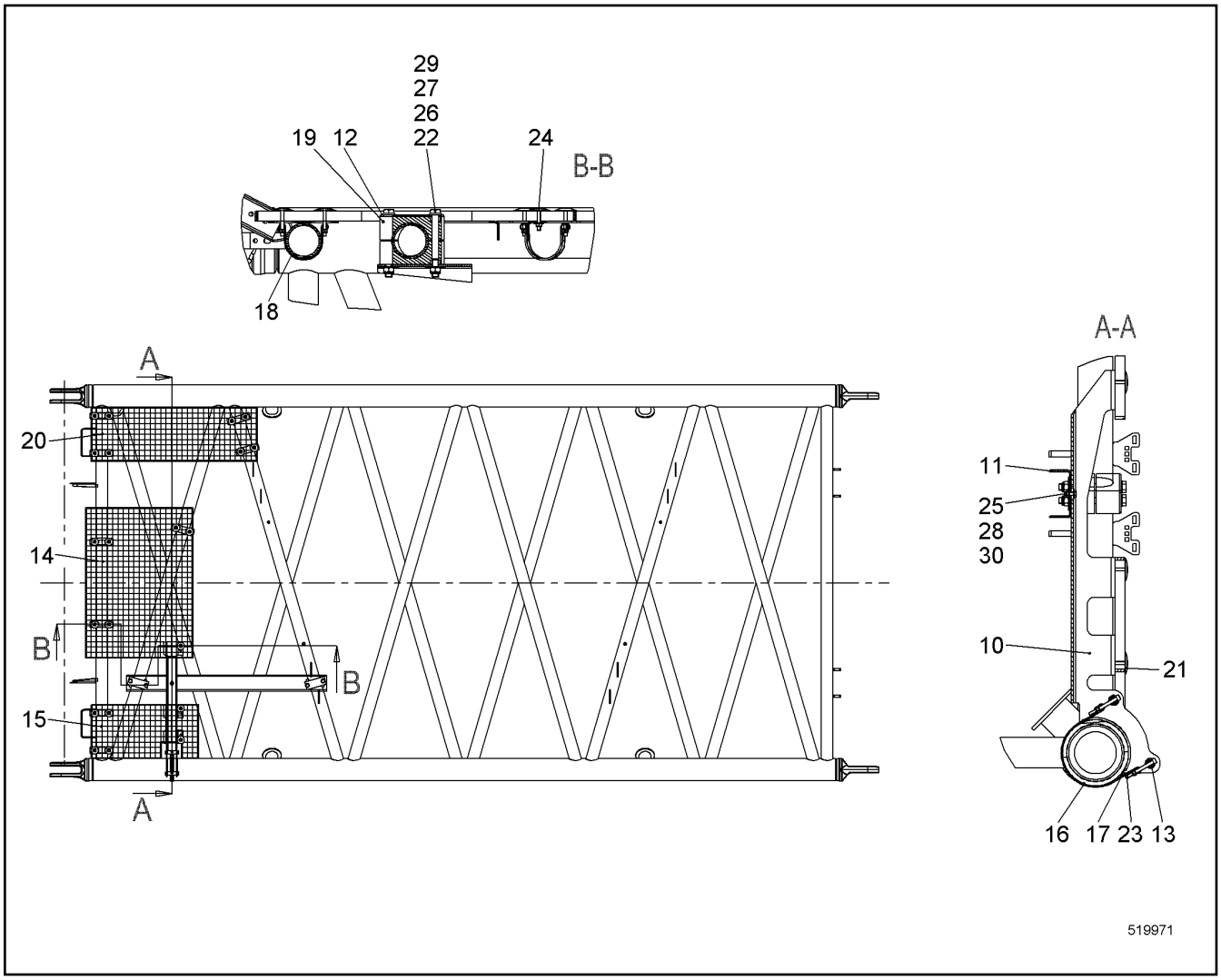

Pos.	Item	Quantity	Description	Bezeichnung	Serie	K
10	11311241	1	PLATE	BLECH		
11	11311336	1	PLATE	BLECH		
12	11310952	2	PLATE	BLECH		
13	11310955	2	AXLE	ACHSE		
14	10530418	1	GRATING	GITTERROST		
15	11311245	1	GRATING	GITTERROST		
16	10531873	1	TIGHTENING STRAP HINGE PIN	GELENKBOLZENSPANNBAND		
17	10352462	0.422	FLEXIBLE EDGE PROTECTOR	KANTENSCHUTZ FLEXIBEL		
18	11283913	9	FIXING CLAMP ⇨ ❑ 486	BEFESTIGUNGSCHELLE		
19	602017114	4	CLAMP-HALF	KLEMMHAELFTE		
20	11311371	1	GRATING	GITTERROST		
21	10098157	3	DISH	TELLER		
22	10543975	4	HEX SCREW ISO 4014 M16X160 10.9	SECHSKANTSCHRAUBE		
23	10539492	2	SOCKET HEAD SCREW ISO 4762 M8X80 A4-7	ZYLINDERSCHRAUBE		
24	10538807	3	HEX SCREW ISO 4017 M8X50 A4-70	SECHSKANTSCHRAUBE		
25	406501414	1	HEX SCREW ISO 4017 M8X25 A4-70	SECHSKANTSCHRAUBE		
26	10544172	4	WASHER ISO 7089 16	SCHEIBE		
27	10544173	4	WASHER ISO 7093-1 16	SCHEIBE		
28	10540510	5	WASHER ISO 7093-1 8 A4	SCHEIBE		
29	10544155	4	HEX NUT ISO 10511 M16 10	SECHSKANTMUTTER		
30	10540493	6	HEX NUT ISO 10511 M8 A4	SECHSKANTMUTTER		

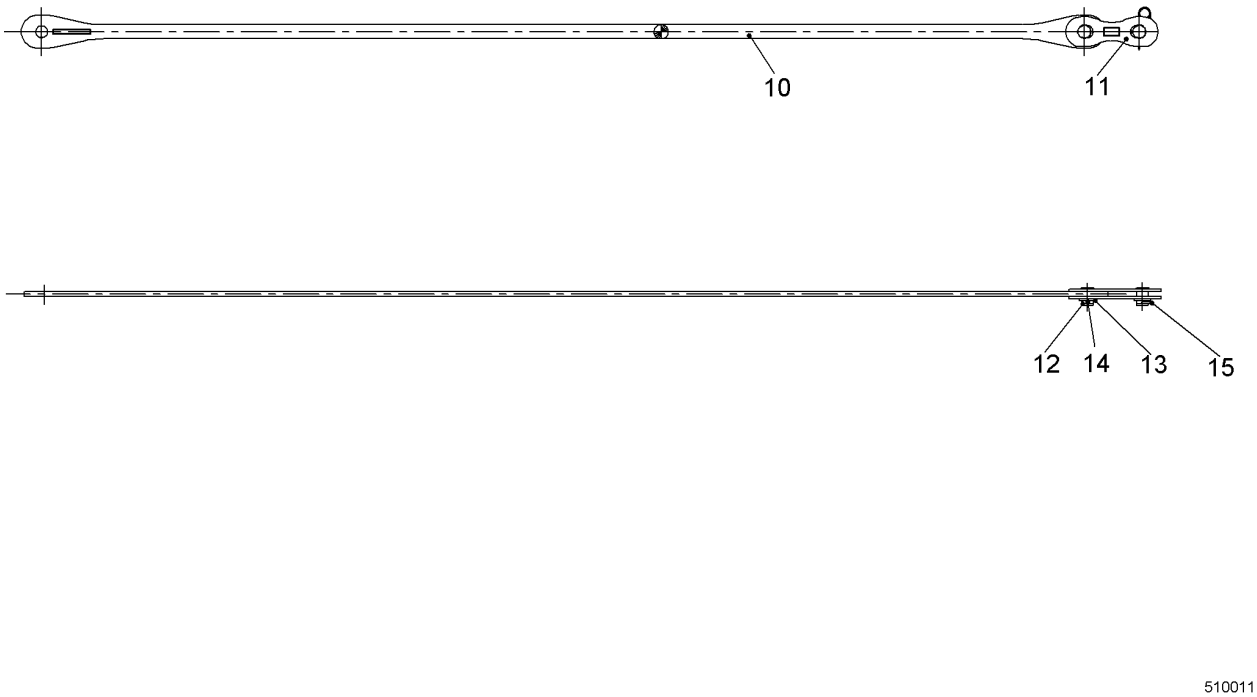

Pos.	Item	Quantity	Description	Bezeichnung	Serie	K
10	10226401	2	ANCHORING ROD	HALTESTANGE		
11	10226402	4	COUPLING LINK	KOPPELLASCHE		
12	959575714	4	PIN 73X95 LHRD900-40;10019758	BOLZEN		
13	421103614	4	WASHER DIN EN 28738 65 ST;	SCHEIBE		
14	433009514	2	SPLIT PIN ISO 1234 8X100 A4	SPLINT		
15	433105008	2	RETAINING SPRING DIN 2194 6MM FS	SICHERUNGSFEDER		

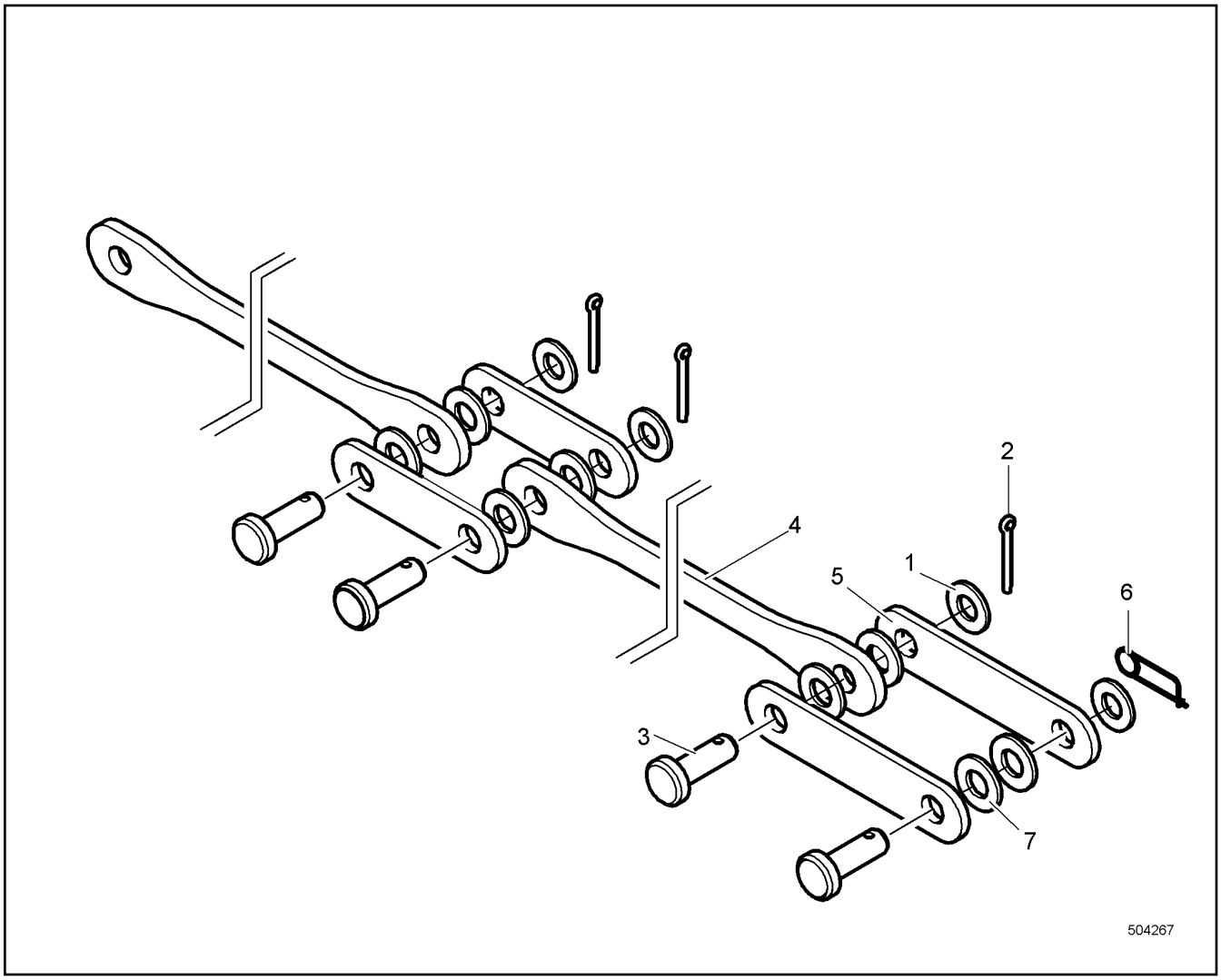

Pos.	Item	Quantity	Description	Bezeichnung	Serie	K
1	421103414	2	WASHER DIN EN 28738 55 ST;	SCHEIBE		
2	433010314	2	SPLIT PIN ISO 1234 10X80 A4	SPLINT		
3	949196614	4	PIN 63X95 LHRD900-40;10019758	BOLZEN		
4	949910614	2	ANCHORING ROD	HALTESTANGE		
5	958145214	4	COUPLING LINK	KOPPELLASCHE		
6	433105008	2	RETAINING SPRING DIN 2194 6MM FS	SICHERUNGSFEDER		
7	949942814	8	WASHER 58/90X2 GUMMI NBR/SBR-65 GRD	SCHEIBE		

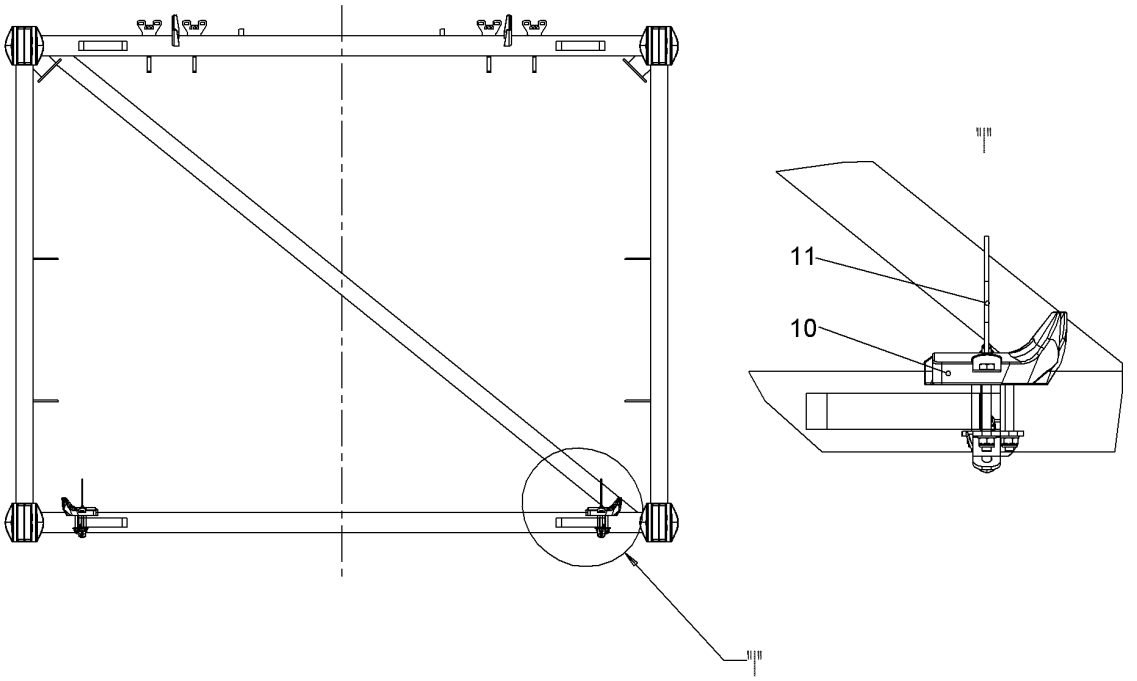

Pos.	Item	Quantity	Description	Bezeichnung	Serie	K
10	992958814	6	SUPPORT ⇨ ❑ 479	AUFLAGE		
11	10350633	2	FASTENER ⇨ ❑ 480	HALTERUNG		

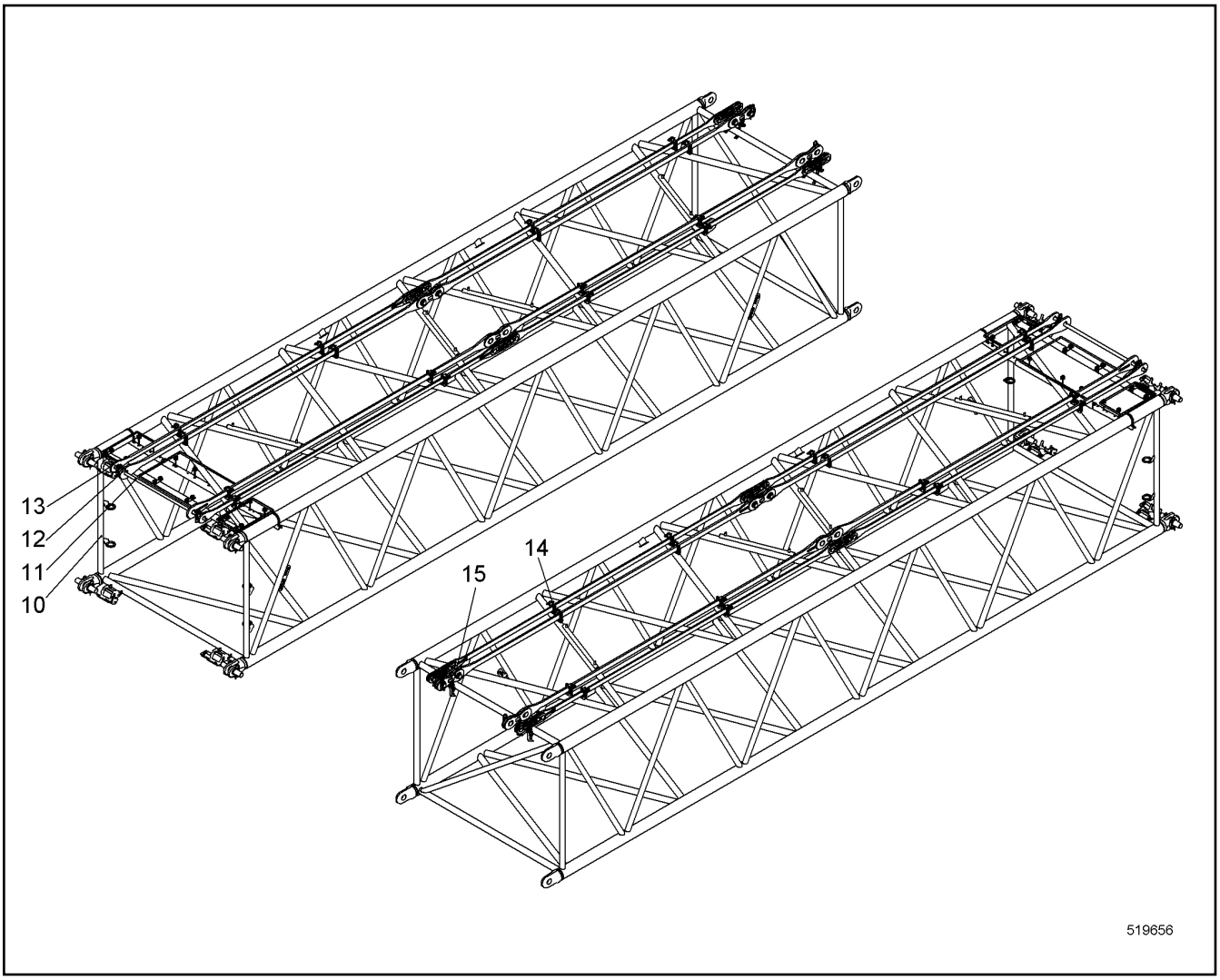

Pos.	Item	Quantity	Description	Bezeichnung	Serie	K
10	11245715	1	BOOM INTERMEDIATE SECTION CPL ⇨ ❑ 504	AL ZWISCHENSTUECK KPL		
11	11287946	1	TRANSPORT LASHING ⇨ ❑ 491	TRANSPORTSICHERUNG		
12	992440614	1	ANCHORING ROD CPL ⇨ ❑ 506	HALTESTANGE KPL		
13	990360914	1	ANCHORING ROD CPL ⇨ ❑ 507	HALTESTANGE KPL		
14	11232907	16	SUPPORT CPL ⇨ ❑ 494	AUFLAGE KPL		
15	11232922	4	SUPPORT CPL ⇨ ❑ 495	AUFLAGE KPL		

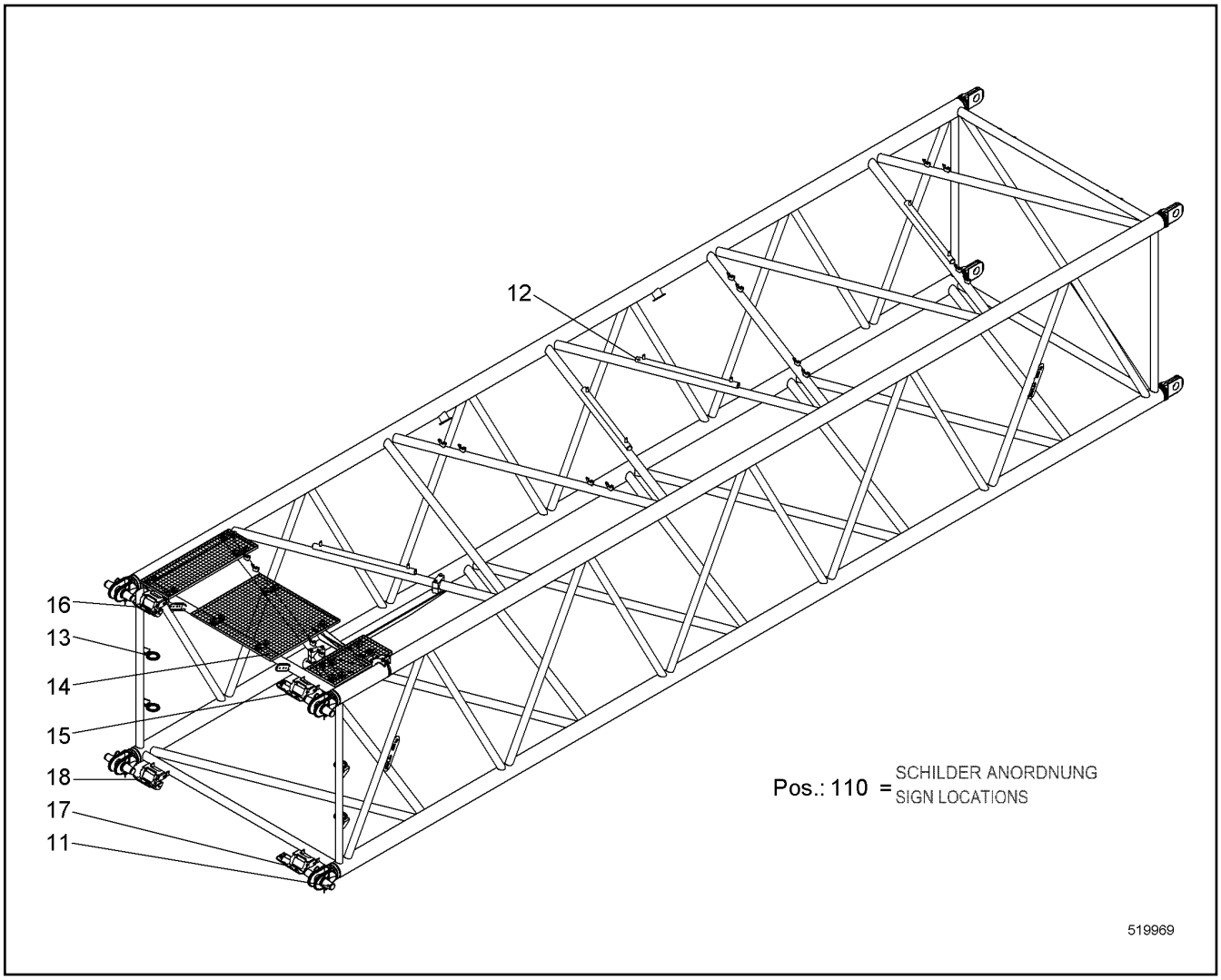

Pos.	Item	Quantity	Description	Bezeichnung	Serie	K
11	11287264	4	PIN CPL ⇨ ❑ 483	BOLZEN KPL		
12	11287255	4	ROPE GUARD CPL ⇨ ❑ 484	SEILSCHUTZ KPL		
13	226017802	1.132	EDGE PROTECTION METER WARE	KANTENSCHUTZ METERWARE		
14	11286261	1	BOOM ACCESS ⇨ ❑ 505	AL BEGEHUNG		
15	11283977	1	SUMP PAN CPL ⇨ ❑ 487	AUFFANGWANNE KPL		
16	11283978	1	SUMP PAN CPL ⇨ ❑ 488	AUFFANGWANNE KPL		
17	11283995	1	SUMP PAN CPL ⇨ ❑ 489	AUFFANGWANNE KPL		
18	11283997	1	SUMP PAN CPL ⇨ ❑ 490	AUFFANGWANNE KPL		
110	11266901	1	SIGN LOCATIONS	SCHILDER ANORD		

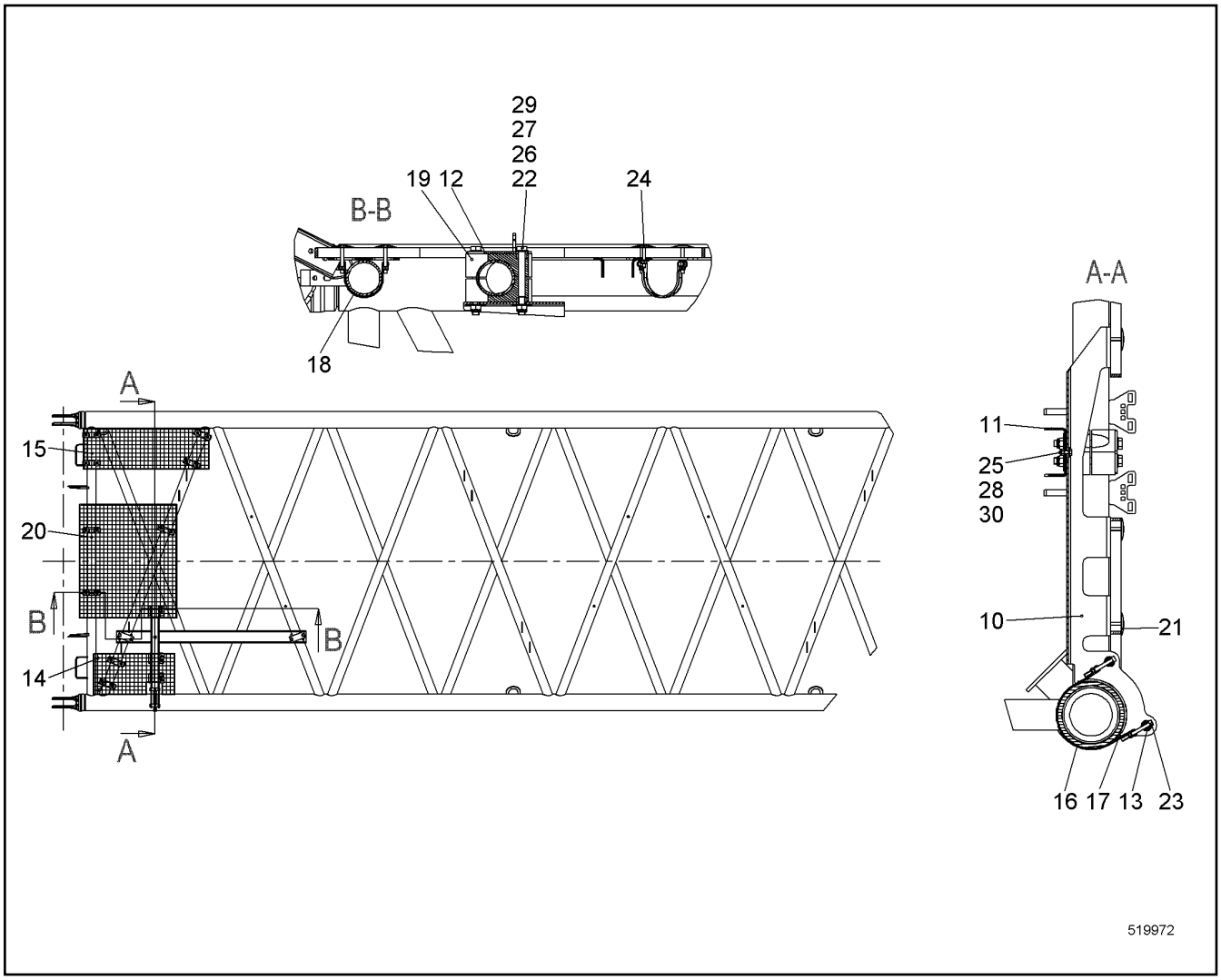

Pos.	Item	Quantity	Description	Bezeichnung	Serie	K
10	11311241	1	PLATE	BLECH		
11	11311393	1	PLATE	BLECH		
12	11310952	2	PLATE	BLECH		
13	11310955	2	AXLE	ACHSE		
14	11311245	1	GRATING	GITTERROST		
15	11311371	1	GRATING	GITTERROST		
16	10531873	1	TIGHTENING STRAP HINGE PIN	GELENKBOLZENSPANNBAND		
17	10352462	0.422	FLEXIBLE EDGE PROTECTOR	KANTENSCHUTZ FLEXIBEL		
18	11283913	9	FIXING CLAMP ⇨ ❑ 486	BEFESTIGUNGSCHELLE		
19	602017114	4	CLAMP-HALF	KLEMMHAELFTE		
20	11311390	1	GRATING	GITTERROST		
21	10098157	3	DISH	TELLER		
22	10543975	4	HEX SCREW ISO 4014 M16X160 10.9	SECHSKANTSCHRAUBE		
23	10539492	2	SOCKET HEAD SCREW ISO 4762 M8X80 A4-7	ZYLINDERSCHRAUBE		
24	10538807	3	HEX SCREW ISO 4017 M8X50 A4-70	SECHSKANTSCHRAUBE		
25	406501414	1	HEX SCREW ISO 4017 M8X25 A4-70	SECHSKANTSCHRAUBE		
26	10544172	4	WASHER ISO 7089 16	SCHEIBE		
27	10544173	4	WASHER ISO 7093-1 16	SCHEIBE		
28	10540510	5	WASHER ISO 7093-1 8 A4	SCHEIBE		
29	10544155	4	HEX NUT ISO 10511 M16 10	SECHSKANTMUTTER		
30	10540493	6	HEX NUT ISO 10511 M8 A4	SECHSKANTMUTTER		

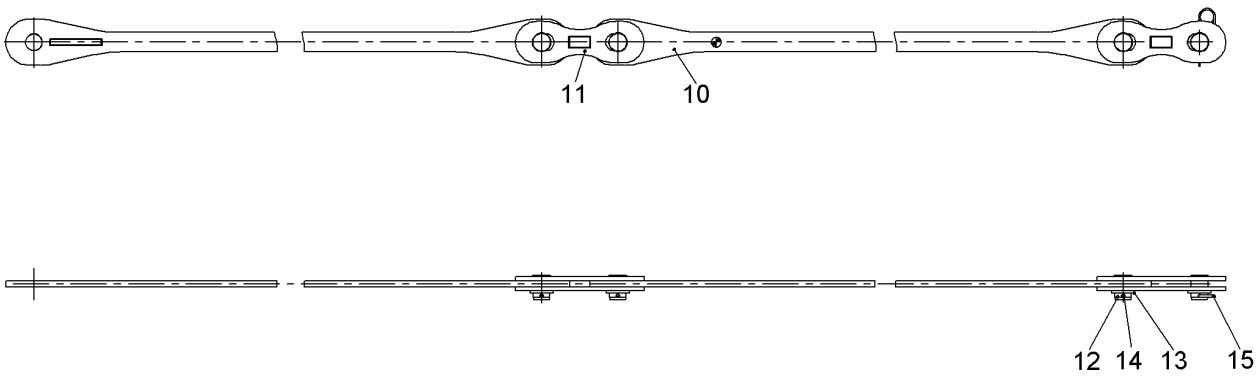

510012

Pos.	Item	Quantity	Description	Bezeichnung	Serie	K
10	10226401	4	ANCHORING ROD	HALTESTANGE		
11	10226402	8	COUPLING LINK	KOPPELLASCHE		
12	959575714	8	PIN 73X95 LHRD900-40;10019758	BOLZEN		
13	421103614	8	WASHER DIN EN 28738 65 ST;	SCHEIBE		
14	433009514	6	SPLIT PIN ISO 1234 8X100 A4	SPLINT		
15	433105008	2	RETAINING SPRING DIN 2194 6MM FS	SICHERUNGSFEDER		

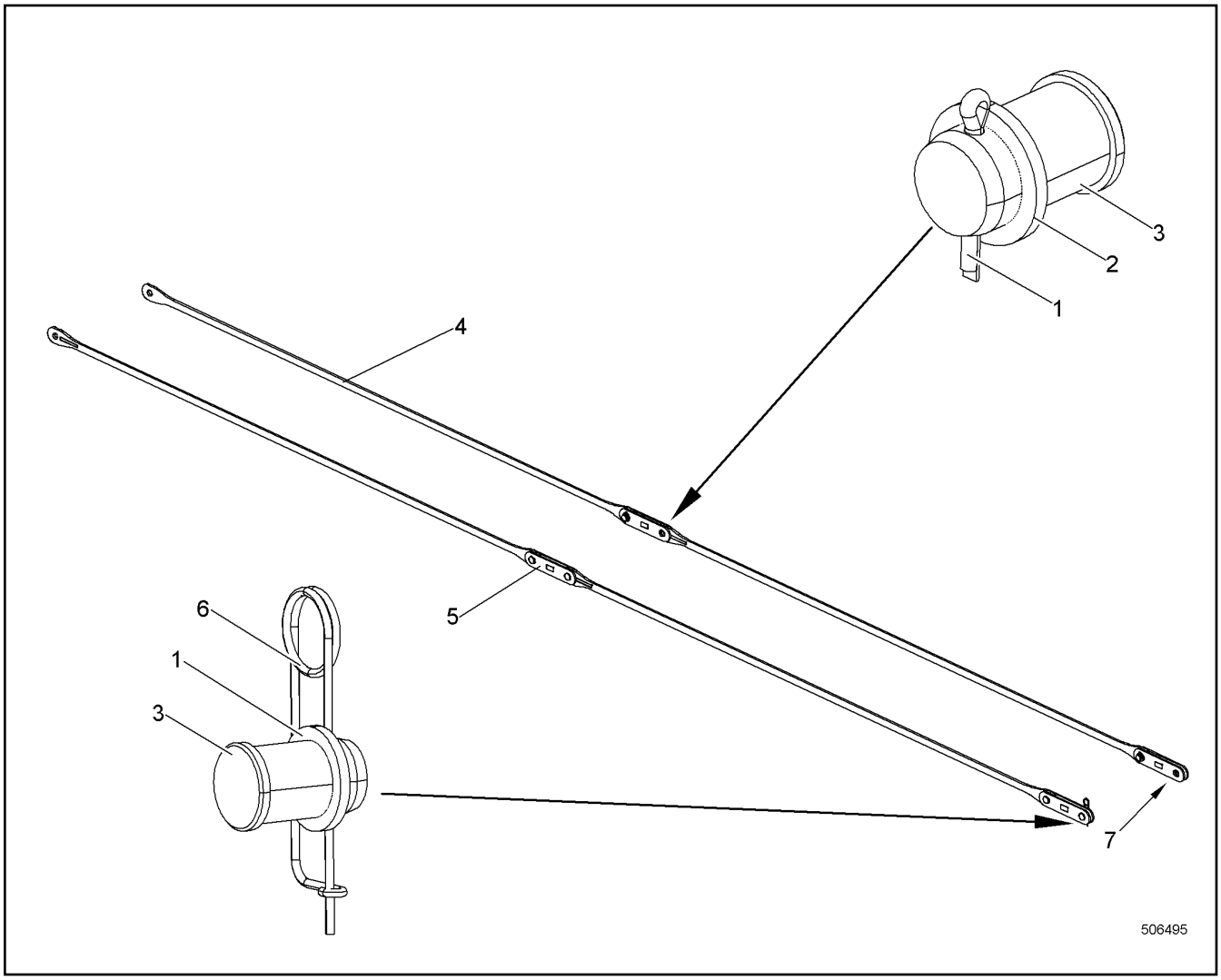

Pos.	Item	Quantity	Description	Bezeichnung	Serie	K
1	421103414	8	WASHER DIN EN 28738 55 ST;	SCHEIBE		
2	433010314	6	SPLIT PIN ISO 1234 10X80 A4	SPLINT		
3	949196614	8	PIN 63X95 LHRD900-40;10019758	BOLZEN		
4	949910614	4	ANCHORING ROD	HALTESTANGE		
5	958145214	8	COUPLING LINK	KOPPELLASCHE		
6	433105008	2	RETAINING SPRING DIN 2194 6MM FS	SICHERUNGSFEDER		
7	949942814	16	WASHER 58/90X2 GUMMI NBR/SBR-65 GRD	SCHEIBE		

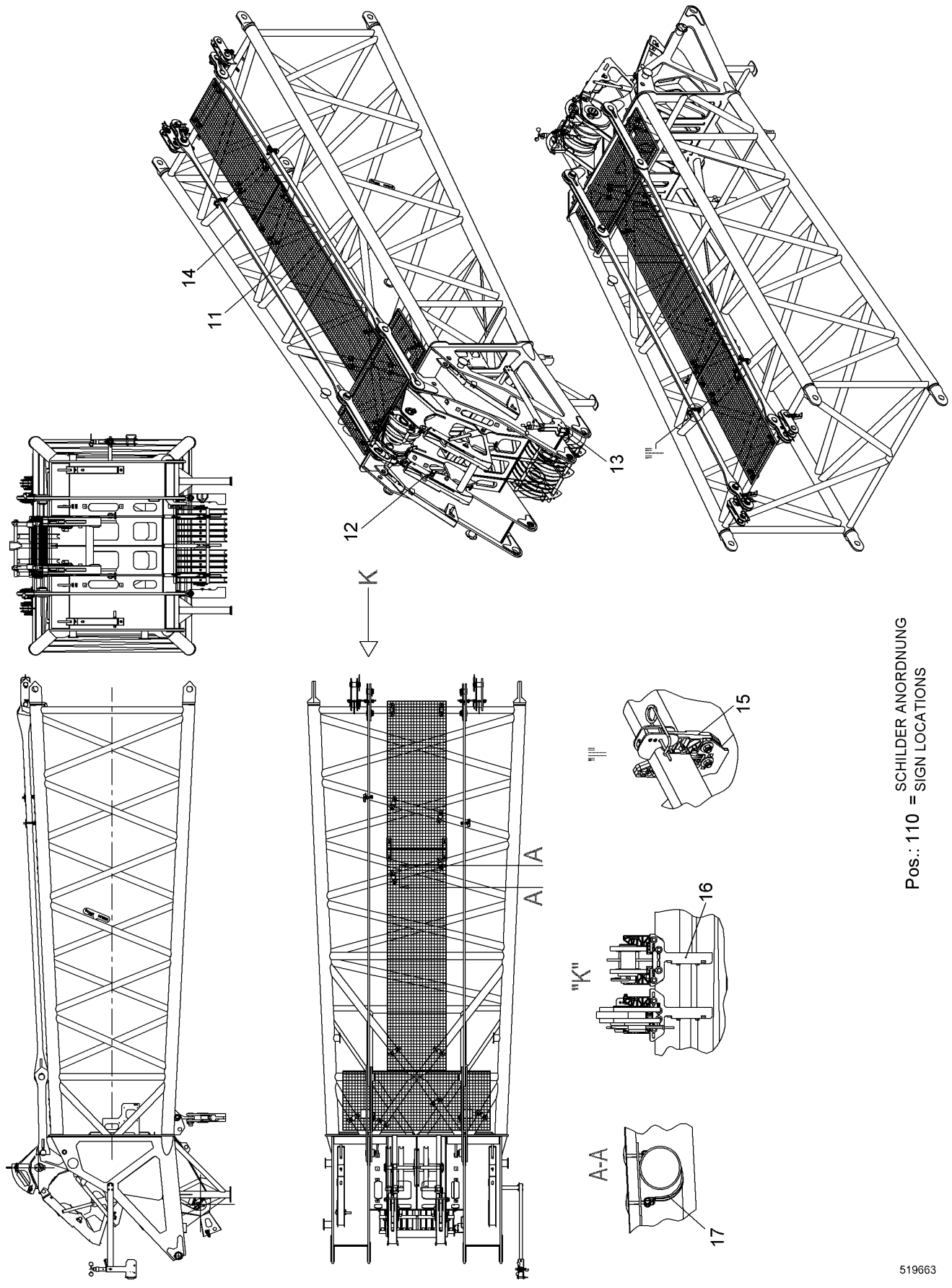
14
11
12
13
K
15
16
17
A
A
"K"
A-A
Pos.: 110 = SCHILDER ANORDNUNG
SIGN LOCATIONS
519663

Pos.	Item	Quantity	Description	Bezeichnung	Serie	K
3	10531413	1	BOOM HEAD EL ⇨ ❑ 510	AL KOPF EL		
11	11286299	1	MOUNTING PARTS ⇨ ❑ 511	MONTAGETEILE		
12	11286105	1	RETAINING DEVICE CPL ⇨ ❑ 513	ARRETIERUNG KPL		
13	990646114	1	ANEMOMETER CPL ⇨ ❑ 514	WINDMESSER KPL		
14	992459414	1	ANCHORING ROD CPL ⇨ ❑ 519	HALTESTANGE KPL		
15	11232907	2	SUPPORT CPL ⇨ ❑ 494	AUFLAGE KPL		
16	11232922	4	SUPPORT CPL ⇨ ❑ 495	AUFLAGE KPL		
17	11283913	12	FIXING CLAMP ⇨ ❑ 486	BEFESTIGUNGSCHELLE		
110	11269727	1	SIGN LOCATIONS	SCHILDER ANORD		

OHNE BILD
WITHOUT ILLUSTRATION
SANS PLANCHE
SIN FIG.
SEM ILUSTRAÇÃO
БЕЗ ИЗОБРАЖЕНИЯ

600000

Pos.	Item	Quantity	Description	Bezeichnung	Serie	K
10	11286324	1	ANGLE TRANSMITTER	WINKELGEBER		
11	693067614	2	PROXIMITY SWITCH	NAEHERUNGSSCHALTER		
21	10575599	1	CABLE LOOM	KABELSATZ		

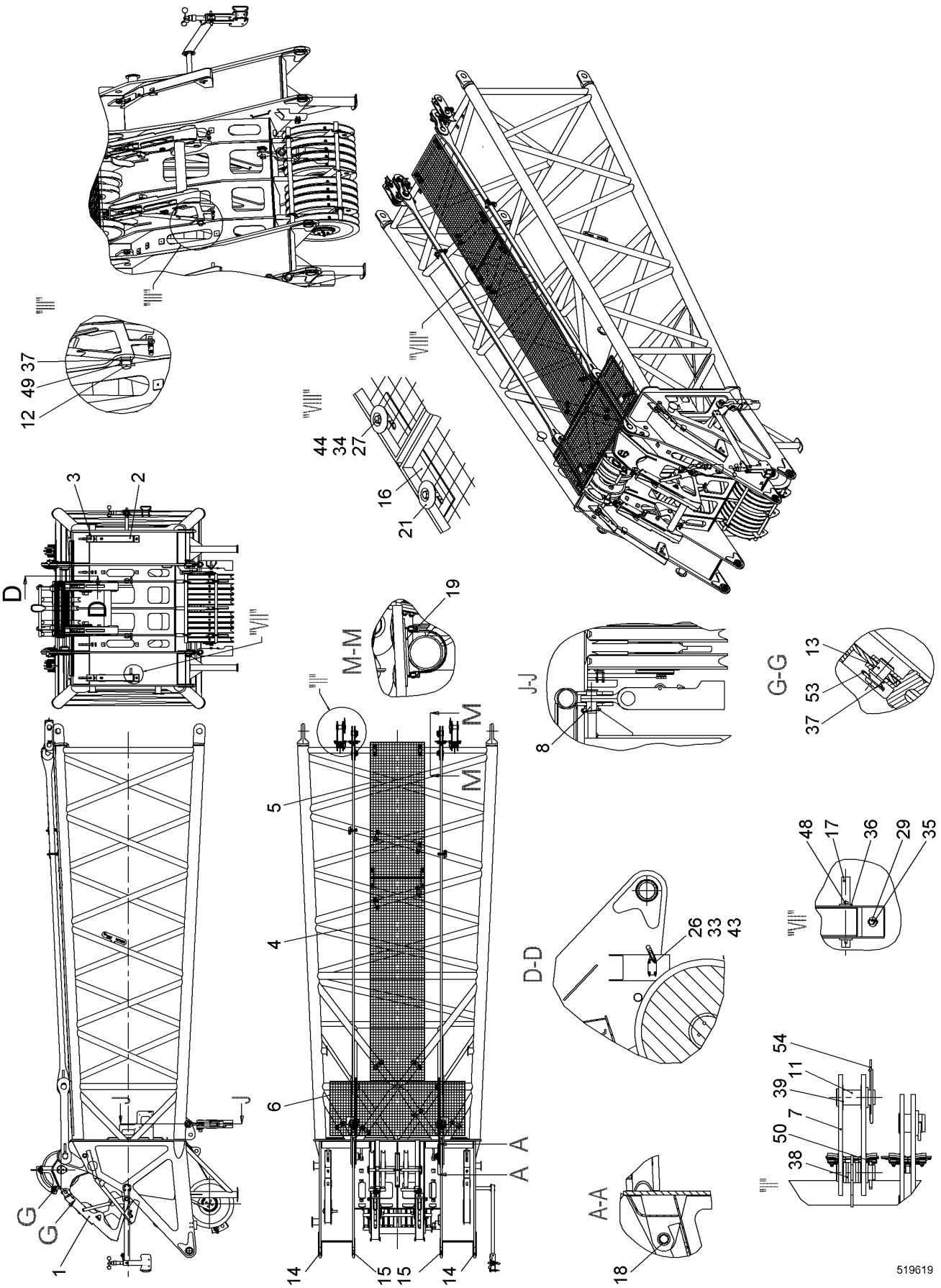

8.7.2015 519619	**138281_ETK_001**	❑ 511 (1/2)
LIEBHERR	**MOUNTING PARTS** **MONTAGETEILE**	**11 28 629 9**

Pos.	Item	Quantity	Description	Bezeichnung	Serie	K
1	10537682	1	GUIDING RAIL ST.CONST.	FUEHRUNGSSCHIENE SCHWK		
2	919956014	2	GUIDING RAIL ST.CONST.	FUEHRUNGSSCHIENE SCHWK		
3	919956114	2	GUIDING RAIL ST.CONST.	FUEHRUNGSSCHIENE SCHWK		
4	790512414	1	GRATING	GITTERROST		
5	790512314	1	GRATING	GITTERROST		
6	11263492	1	GRATING	GITTERROST		
7	949911014	4	COUPLING LINK	KOPPELLASCHE		
8	910353714	2	BOLT CONNECTION	BOLZENVERBINDUNG		
11	959643514	4	PIN	BOLZEN		
12	10550993	2	PIN 53X67 LHRD900-40;10019758	BOLZEN		
13	949946714	2	PIN 53X82 LHRD900-40;10019758	BOLZEN		
14	385037314	2	BUSHING 90/110X50 E470;EN 10294-1	BUCHSE		
15	954398803	2	BUSHING 100/80X40 E470;EN 10294-1	BUCHSE		
16	970854303	2	WP	WP		
17	957336914	1	TUBE	ROHR		
18	746911614	4	SPHERICAL BEARING	GELENKLAGER		
19	11231673	2	SHEET	PLATTE		
21	10098157	4	DISH	TELLER		
26	10539454	4	SOCKET HEAD SCREW ISO 4762 M5X45 A4-7	ZYLINDERSCHRAUBE		
27	406532914	4	HEX SCREW ISO 4017 M8X40 A4-70	SECHSKANTSCHRAUBE		
29	406527314	8	HEX SCREW ISO 4017 M10X16 A4-70	SECHSKANTSCHRAUBE		
33	420005214	8	WASHER ISO 7089 5 A4	SCHEIBE		
34	10540510	4	WASHER ISO 7093-1 8 A4	SCHEIBE		
35	10540511	8	WASHER ISO 7093-1 10 A4	SCHEIBE		
36	421102214	2	WASHER DIN EN 28738 26 ST;	SCHEIBE		
37	421103214	4	WASHER DIN EN 28738 45 ST;	SCHEIBE		
38	421103414	16	WASHER DIN EN 28738 55 ST;	SCHEIBE		
39	949942814	4	WASHER 58/90X2 GUMMI NBR/SBR-65 GRD	SCHEIBE		
43	10540484	4	HEX NUT ISO 10511 M5 A4	SECHSKANTMUTTER		
44	10540493	4	HEX NUT ISO 10511 M8 A4	SECHSKANTMUTTER		
48	433008814	2	SPLIT PIN ISO 1234 8X50 A4	SPLINT		
49	433009114	2	SPLIT PIN ISO 1234 8X63 A4	SPLINT		
50	433010314	2	SPLIT PIN ISO 1234 10X80 A4	SPLINT		
53	433101208	2	RETAINING SPRING 4MM	SICHERUNGSFEDER		
54	433105008	2	RETAINING SPRING DIN 2194 6MM FS	SICHERUNGSFEDER		
200	870000814	1	SCREW LOCKING	SCHRAUBENSICHERUNG		

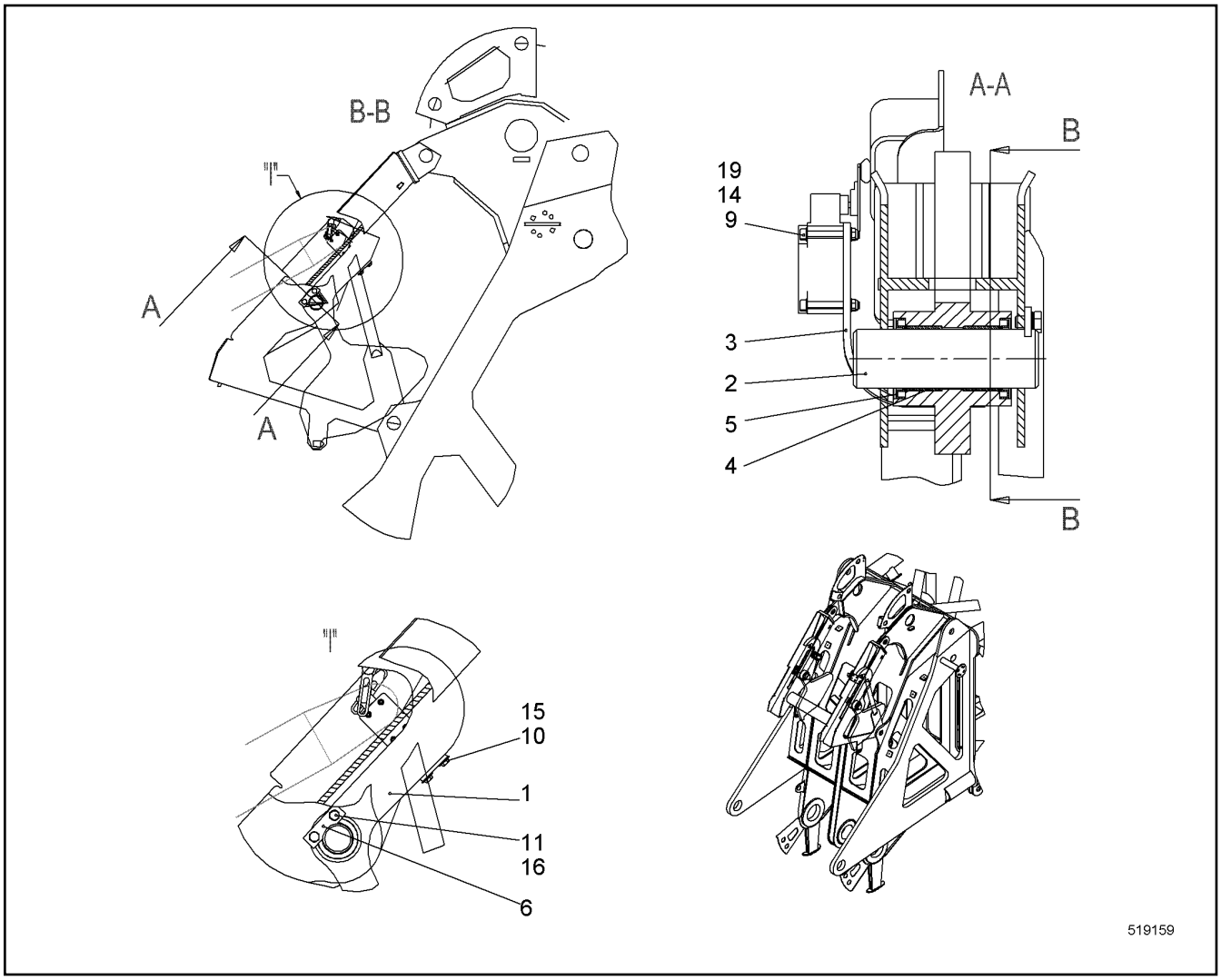

Pos.	Item	Quantity	Description	Bezeichnung	Serie	K
1	919617914	2	LOCKING DEVICE	ARRETIERUNG		
2	956847814	2	PIN 50X157 LHRD900-40;10019758	BOLZEN		
3	956033214	2	WP	WP		
4	708014114	4	BUSHING 50/55X30	BUCHSE		
5	710004514	4	SEALING RING	DICHTRING		
6	703003014	2	AXLE HOLDER	ACHSHALTER		
9	10539454	8	SOCKET HEAD SCREW ISO 4762 M5X45 A4-7	ZYLINDERSCHRAUBE		
10	406501614	4	HEX SCREW ISO 4017 M8X12 A4-70	SECHSKANTSCHRAUBE		
11	406527314	4	HEX SCREW ISO 4017 M10X16 A4-70	SECHSKANTSCHRAUBE		
14	420005214	16	WASHER ISO 7089 5 A4	SCHEIBE		
15	10540510	4	WASHER ISO 7093-1 8 A4	SCHEIBE		
16	10536579	4	LOCK WASHER 10 254 SMO;EN 10088-3	SICHERUNGSSCHEIBE		
19	10540484	8	HEX NUT ISO 10511 M5 A4	SECHSKANTMUTTER		

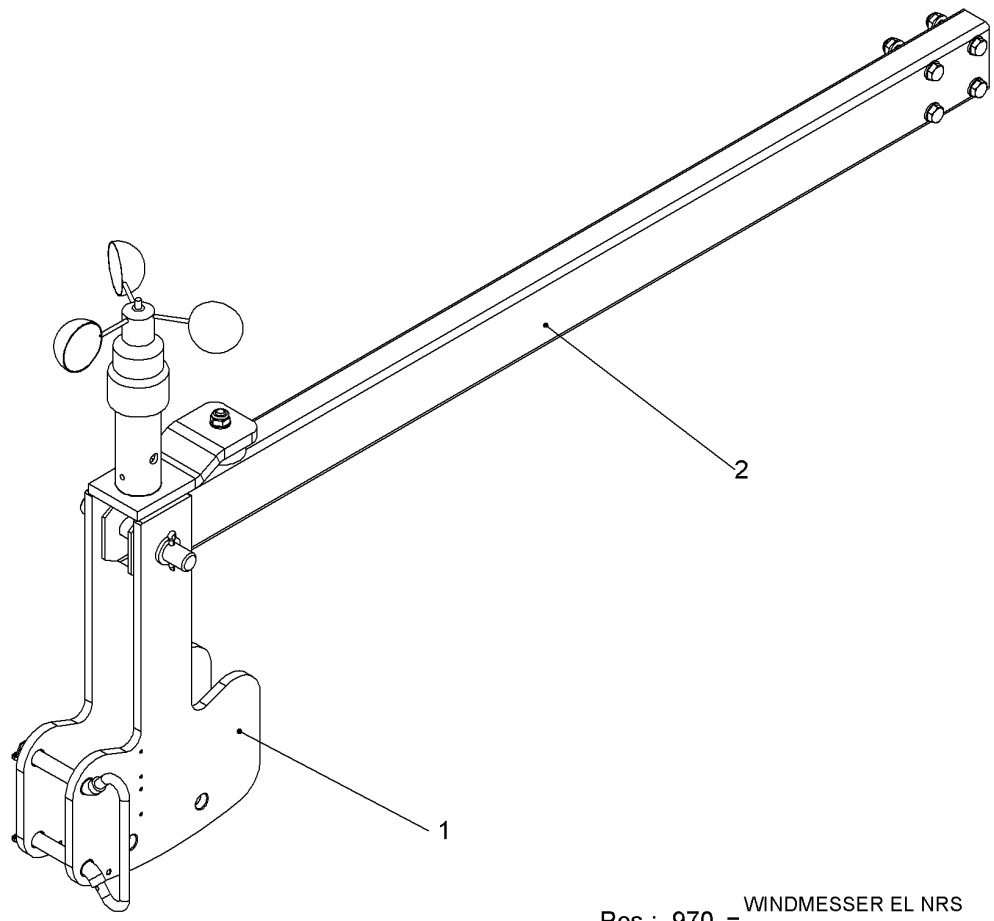

Pos.	Item	Quantity	Description	Bezeichnung	Serie	K
1	10598633	1	PENDULUM CPL ⇨ ❑ 515	PENDEL KPL		
2	11283576	1	MOUNTING PARTS ⇨ ❑ 516	MONTAGETEILE		
970	970720403	1	ANEMOMETER EL RFK ⇨ ❑ 517	WINDMESSER EL NRS		

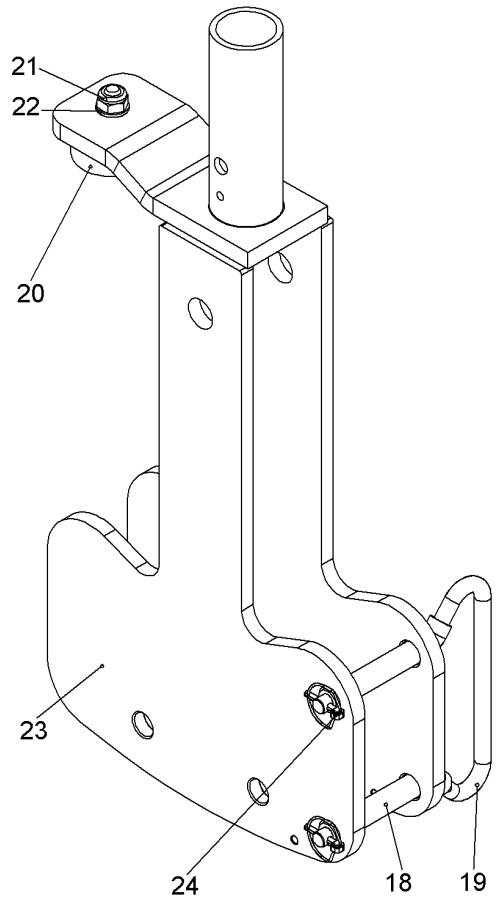

Pos.	Item	Quantity	Description	Bezeichnung	Serie	K
18	603018114	0.2	HEATSHRINK SLEEVING	SCHRUMPFSCHLAUCH		
19	10592334	1	BRACKET	BUEGEL		
20	726613014	1	RUBBER MOUNT	LAGER GUMMI		
21	10540494	1	HEX NUT ISO 10511 M10 A4	SECHSKANTMUTTER		
22	420001114	1	WASHER ISO 7089 10 A4	SCHEIBE		
23	990627014	1	PENDULUM	PENDEL		
24	485565814	2	SAFETY PLUG W HINGE-LID 4X27	SICHERHEITSKLAPPSTECKER		
25	773400308	0.9	STEEL WIRE ROPE	STAHLDRAHTSEIL		
26	773920008	6	FERRULE	PRESSKLEMME		

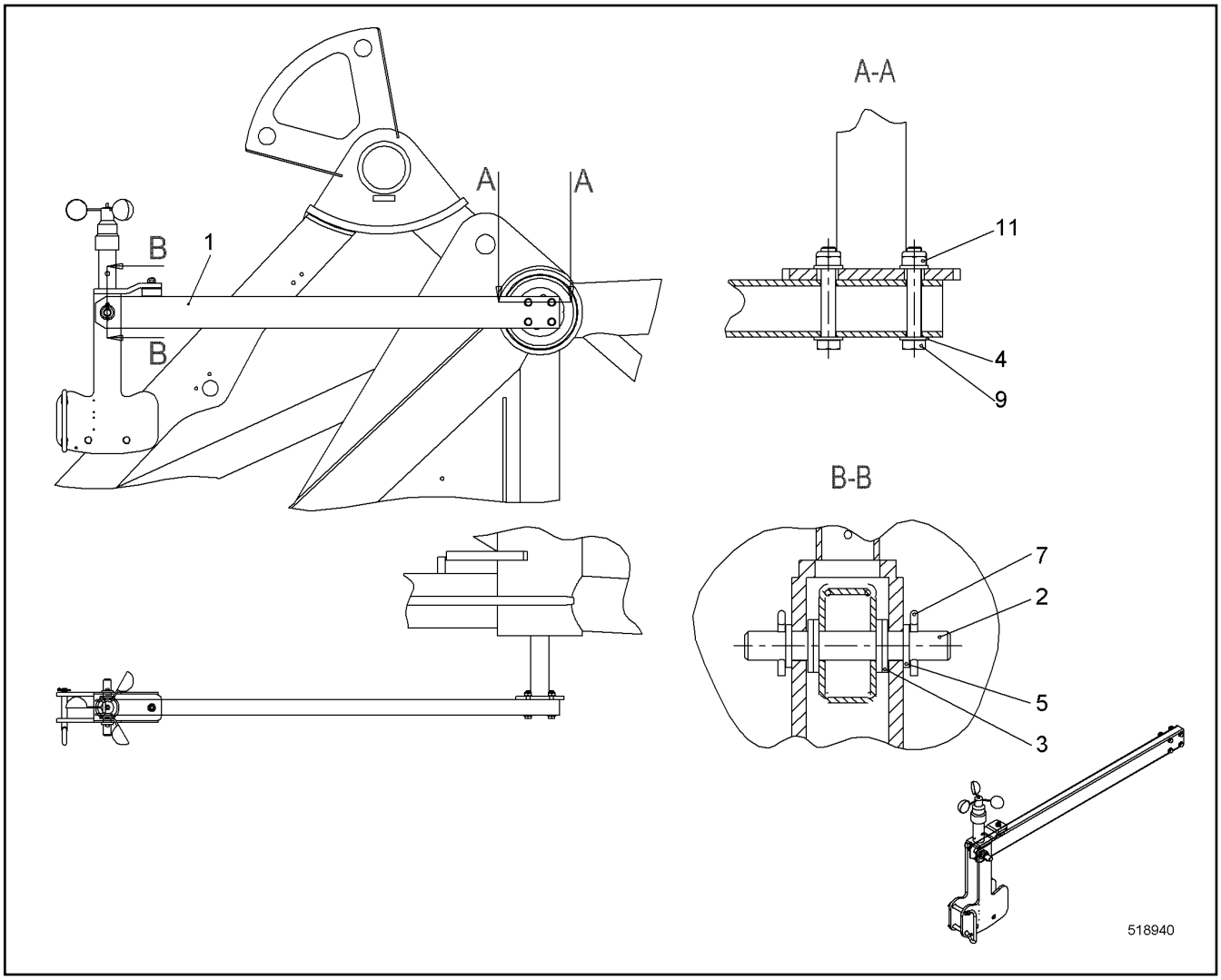

Pos.	Item	Quantity	Description	Bezeichnung	Serie	K
1	11278507	1	SQUARE TUBE	VIERKANTROHR		
2	958214314	1	PIN EN 10278 20X144 S355J2G3C	BOLZEN		
3	948967314	4	WASHER 21/37X4 PA 6 G	SCHEIBE		
4	420001114	8	WASHER ISO 7089 10 A4	SCHEIBE		
5	421101714	2	WASHER DIN EN 28738 20 ST;	SCHEIBE		
7	433006314	2	SPLIT PIN ISO 1234 5X32	SPLINT		
9	10538823	4	HEX SCREW ISO 4017 M10X65 A4-70	SECHSKANTSCHRAUBE		
11	10540494	4	HEX NUT ISO 10511 M10 A4	SECHSKANTMUTTER		

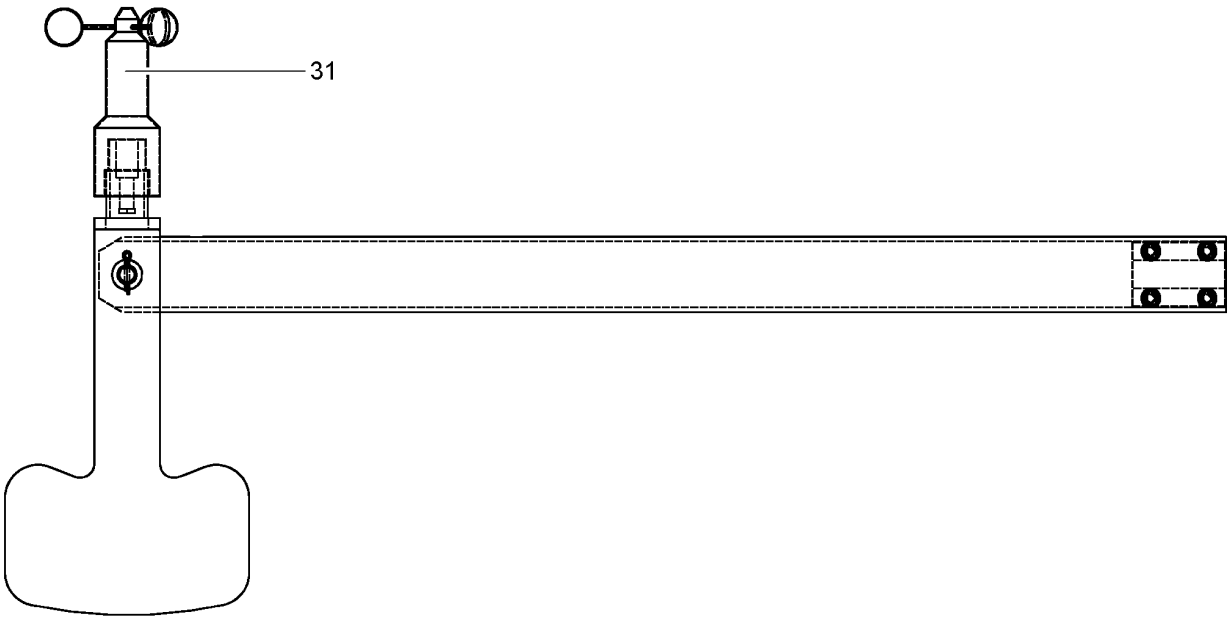

Pos.	Item	Quantity	Description	Bezeichnung	Serie	K
31	692815514	1	WIND TRANSMITTER ⇨ ❑ 518	WINDGEBER		

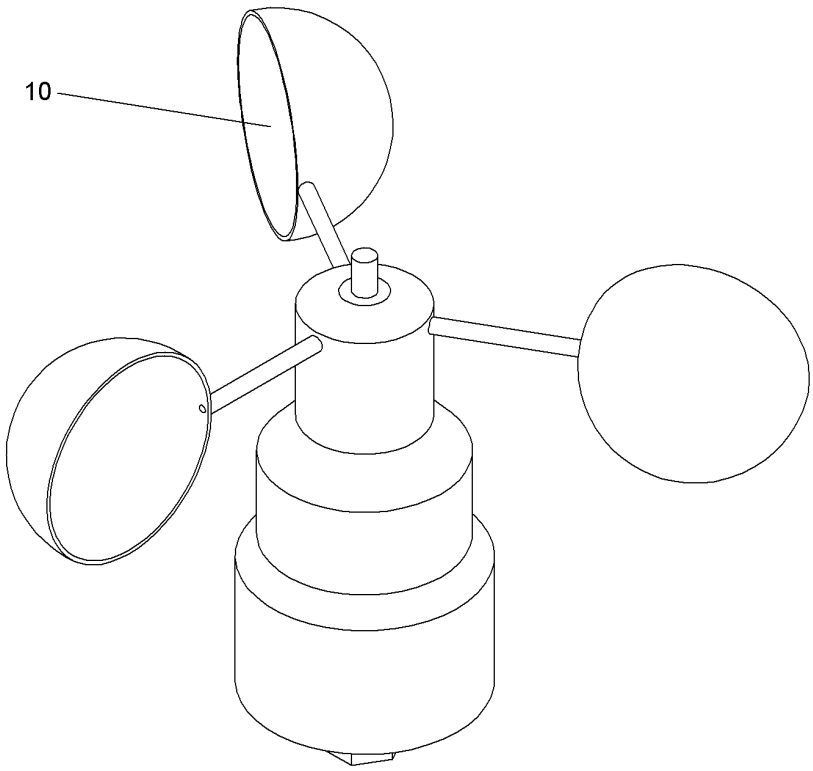

Pos.	Item	Quantity	Description	Bezeichnung	Serie	K
10	11238878	1	VORTEX WHEEL	LOEFFELRAD		

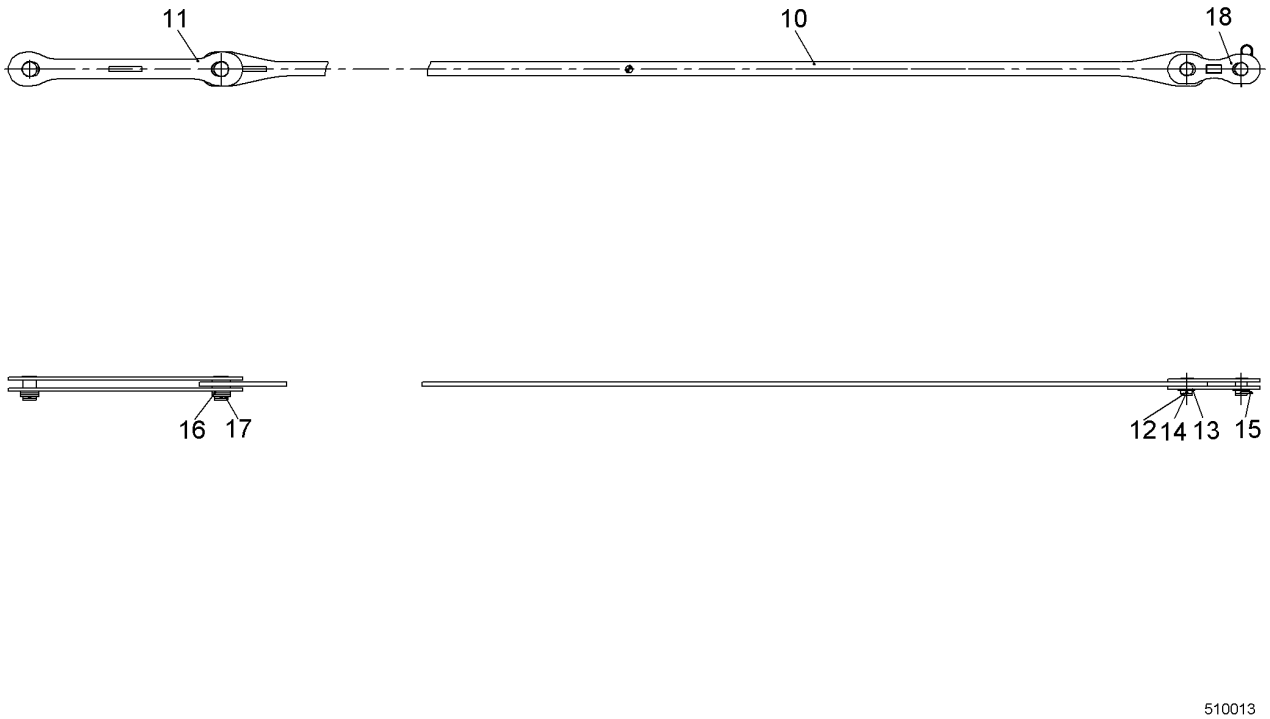

Pos.	Item	Quantity	Description	Bezeichnung	Serie	K
10	10337309	2	ANCHORING ROD	HALTESTANGE		
11	10348694	4	COUPLING LINK	KOPPELLASCHE		
12	959575714	4	PIN 73X95 LHRD900-40;10019758	BOLZEN		
13	421103614	4	WASHER DIN EN 28738 65 ST;	SCHEIBE		
14	433009514	6	SPLIT PIN ISO 1234 8X100 A4	SPLINT		
15	433105008	2	RETAINING SPRING DIN 2194 6MM FS	SICHERUNGSFEDER		
16	421103714	16	WASHER DIN EN 28738 75 ST;	SCHEIBE		
17	959921514	4	PIN 83X131 LHRD900-40;10019758	BOLZEN		
18	10226402	4	COUPLING LINK	KOPPELLASCHE		

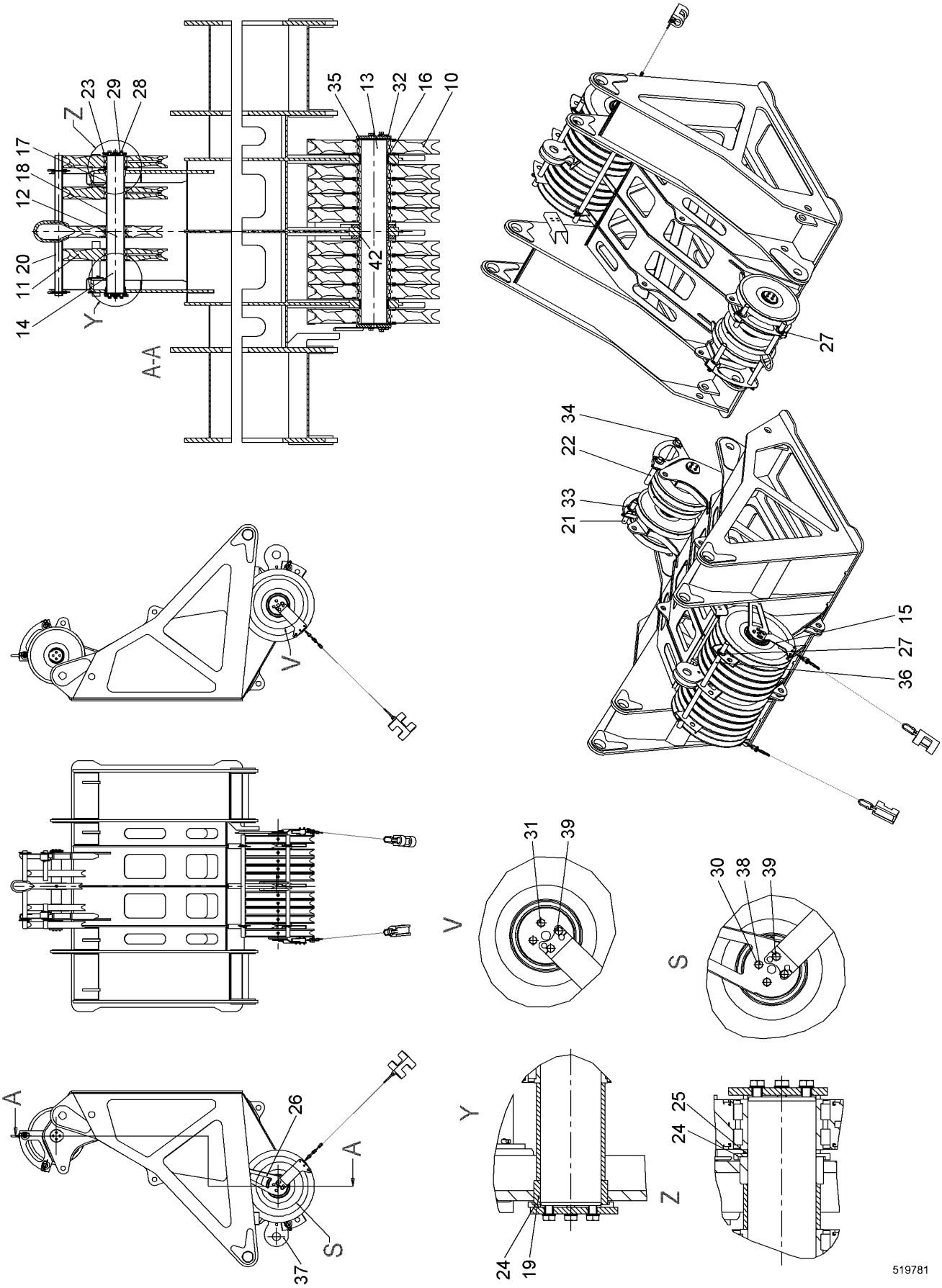
A-A
Z
Y
V
S
A
23
29
28
35
13
32
16
10
12 18 17
11 20
14
42
27
34
22
21 33
15
36
31
39
30
38
26
37
24
19
25
519781

Pos.	Item	Quantity	Description	Bezeichnung	Serie	K
10	790202014	10	ROPE PULLEY CPL	SEILROLLE KPL		
11	919279914	3	ROPE PULLEY CPL	SEILROLLE KPL		
12	915523714	1	ROPE PULLEY CPL	SEILROLLE KPL		
13	956802414	1	PIN	BOLZEN		
14	956802514	1	PIN	BOLZEN		
15	993080014	2	HOIST LIMIT SWITCH INSTAL. ⇨ ❑ 522	SPITZENENDSCHALTER EINBAU		
16	956803414	2	BUSHING 140/160X55 LHR355-20;10019728	BUCHSE		
17	956805314	2	BUSHING 91/101.6X60 LHR355-20;10019728	BUCHSE		
18	956805414	2	BUSHING 91/101.6X145 LHR355-20;10019728	BUCHSE		
19	949988214	2	BUSHING 90/110X36 S355J2H;EN 10210-1	BUCHSE		
20	993522914	1	ROPE GUARD ST.CONST.	SEILSCHUTZ SCHWK		
21	956809514	1	ROPE GUARD TUBE	SEILSCHUTZROHR		
22	956213814	1	TUBE	ROHR		
23	949724114	2	COVER	DECKEL		
24	956803514	2	DISTANCE RING 91/127X8 S355J2H;EN 10210-	DISTANZRING		
25	956803714	2	BUSHING 91/101.6X5 LHR355-20;10019728	BUCHSE		
26	956810314	1	WP	WP		
27	420003714	10	WASHER ISO 7089 42	SCHEIBE		
28	406517914	8	HEX SCREW ISO 4017 M12X25 A4-70	SECHSKANTSCHRAUBE		
29	10536581	8	LOCK WASHER 12 254 SMO;EN 10088-3	SICHERUNGSSCHEIBE		
30	10536597	8	LOCK WASHER 16 27MNCRB5-2;EN 10083	SICHERUNGSSCHEIBE		
31	10539317	2	HEX SCREW ISO 4017 M16X35 10.9	SECHSKANTSCHRAUBE		
32	956803214	2	BUSHING EN 10210-2 140.5/159X5 S355J2H;E	BUCHSE		
33	433008108	2	SPLIT PIN ISO 1234 6.3X63	SPLINT		
34	433101208	8	RETAINING SPRING 4MM	SICHERUNGSFEDER		
36	956809314	2	ROPE GUARD TUBE	SEILSCHUTZROHR		
37	950143914	2	PLATE	BLECH		
38	10539318	2	HEX SCREW ISO 4017 M16X40 10.9	SECHSKANTSCHRAUBE		
39	10543902	4	HEX SCREW ISO 4017 M16X45 10.9	SECHSKANTSCHRAUBE		
42	11233062	1	BUSHING 140/160X100 GZ-CUZN25AL5MN4FE	BUCHSE		

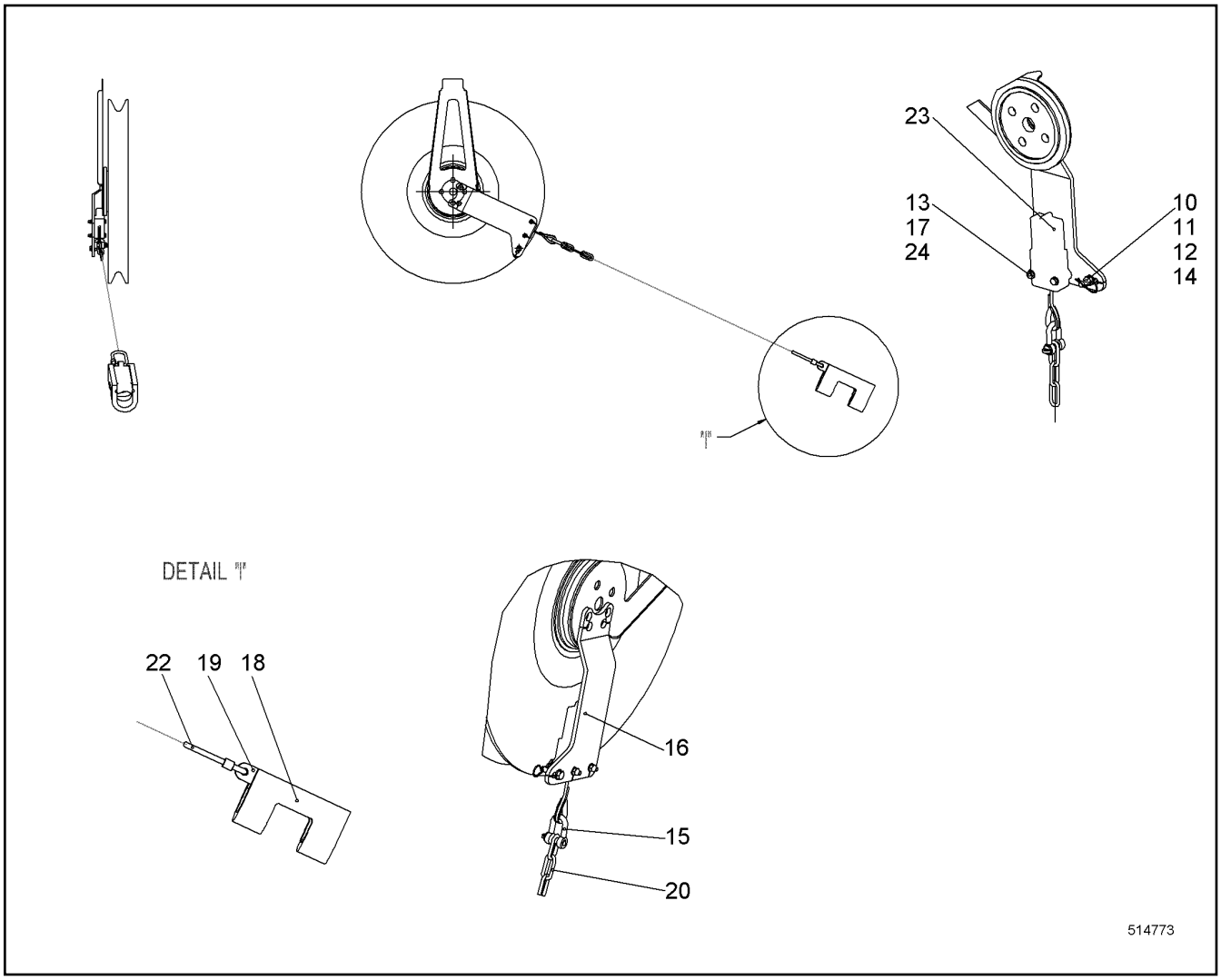

Pos.	Item	Quantity	Description	Bezeichnung	Serie	K
10	420001114	2	WASHER ISO 7089 10 A4	SCHEIBE		
11	10539971	1	HEX SCREW ISO 4017 M10X40 A4-70	SECHSKANTSCHRAUBE		
12	10540494	1	HEX NUT ISO 10511 M10 A4	SECHSKANTMUTTER		
13	420001014	4	WASHER ISO 7089 8 A4	SCHEIBE		
14	433206014	1	SPRING PLUG DIN 11024 2.5	FEDERSTECKER		
15	773939214	1	SHACKLE	SCHAEKEL		
16	950102914	1	PLATE	BLECH		
17	10331507	2	HEX SCREW ISO 4017 M8X65 A4-70	SECHSKANTSCHRAUBE		
18	388283108	1	WEIGHT	GEWICHT		
19	388283208	1	WEIGHT	GEWICHT		
20	740000208	3	CHAIN	KETTE		
22	10473040	1	SCREW CARABINER	SCHRAUBKARABINER		
24	10540493	2	HEX NUT ISO 10511 M8 A4	SECHSKANTMUTTER		

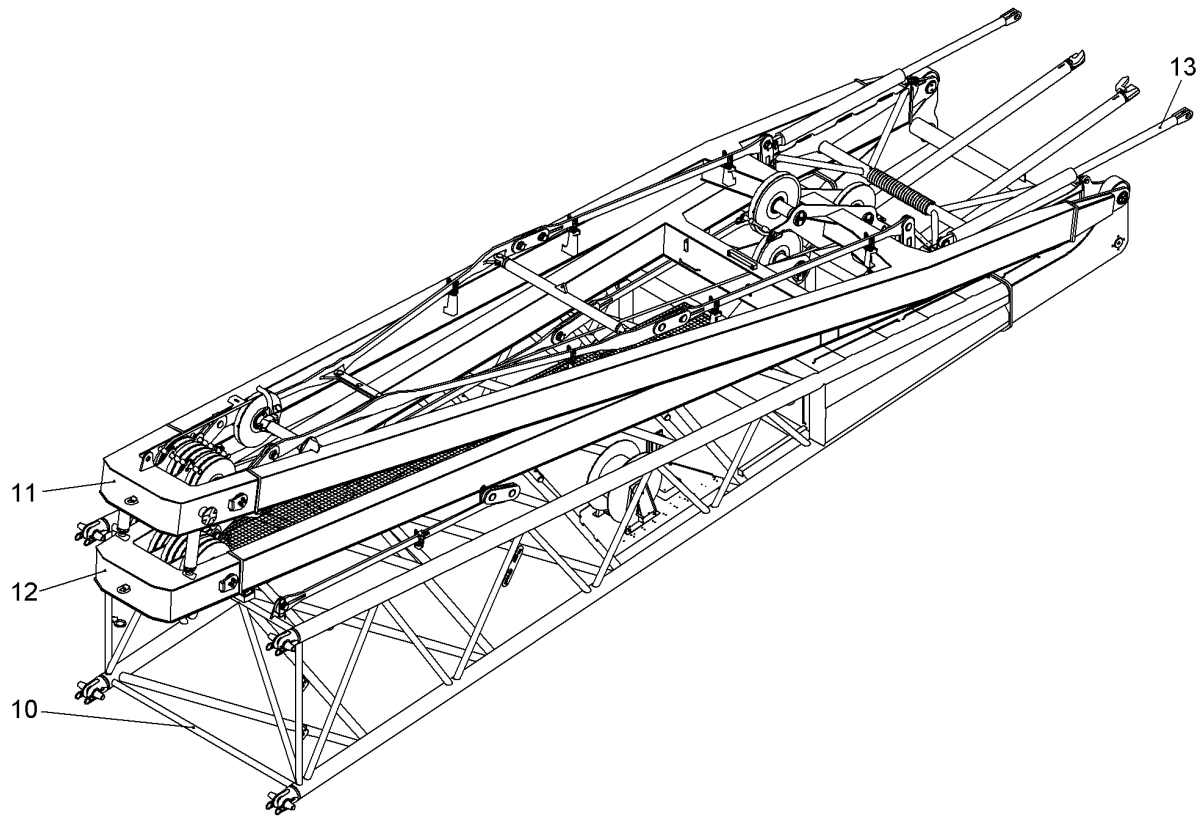

Pos.: 110 = SCHILDER ANORDNUNG / SIGN LOCATIONS

519657

Pos.	Item	Quantity	Description	Bezeichnung	Serie	K
10	11243365	1	PIVOT PIECE NEEDLE CPL ⇨ ❑ 524	ANLENKSTUECK NADEL KPL		
11	11244759	1	A-FRAME 2 CPL ⇨ ❑ 531	A-BOCK 2 KPL		
12	11246116	1	A-FRAME 3 CPL ⇨ ❑ 538	A-BOCK 3 KPL		
13	10531455	1	TILTING-BACK SUPPORT NEEDLE ⇨ ❑ 543	RUECKFALLSTUETZE NADEL		
110	11266945	1	SIGN LOCATIONS	SCHILDER ANORD		

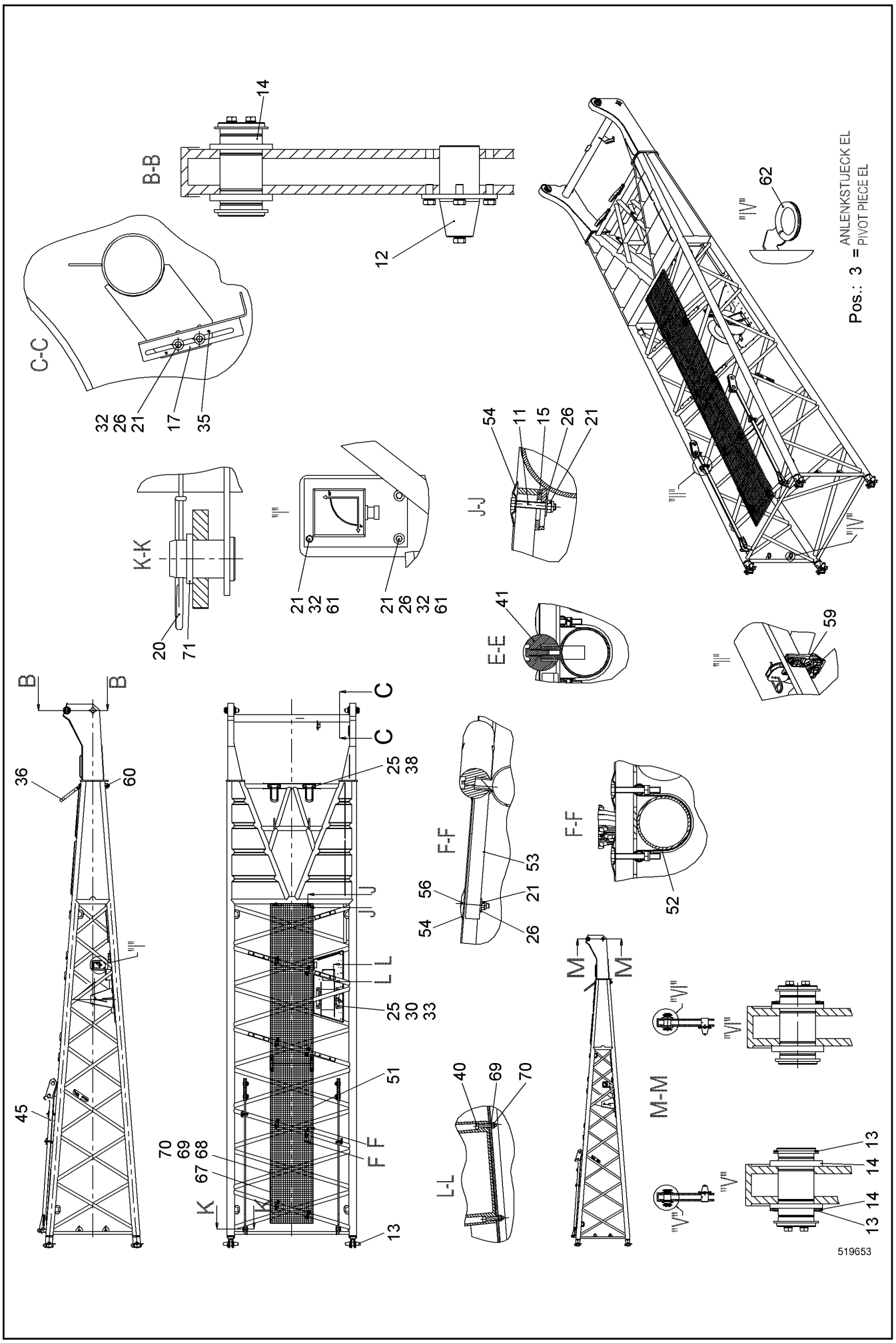

8.7.2015 519653	**138281_ETK_001**	524 (1/2)
LIEBHERR	**PIVOT PIECE NEEDLE CPL** **ANLENKSTUECK NADEL KPL**	**11 24 336 5**

Pos.	Item	Quantity	Description	Bezeichnung	Serie	K
3	10531409	1	PIVOT PIECE EL ⇨ ❑ 526	ANLENKSTUECK EL		
11	10538807	2	HEX SCREW ISO 4017 M8X50 A4-70	SECHSKANTSCHRAUBE		
12	11296485	2	PIN CPL ⇨ ❑ 527	BOLZEN KPL		
13	11288523	4	PIN CPL ⇨ ❑ 528	BOLZEN KPL		
14	11296492	2	PIN CPL ⇨ ❑ 529	BOLZEN KPL		
15	11285382	2	RUBBER	GUMMI		
17	950563214	1	LIMIT SWITCH HOLDER	ENDSCHALTER HALTER		
20	433105008	2	RETAINING SPRING DIN 2194 6MM FS	SICHERUNGSFEDER		
21	10540493	11	HEX NUT ISO 10511 M8 A4	SECHSKANTMUTTER		
25	420001514	12	WASHER ISO 7089 12 A4	SCHEIBE		
26	10540510	12	WASHER ISO 7093-1 8 A4	SCHEIBE		
30	406517314	4	HEX SCREW ISO 4017 M12X30 A4-70	SECHSKANTSCHRAUBE		
32	406501414	5	HEX SCREW ISO 4017 M8X25 A4-70	SECHSKANTSCHRAUBE		
33	10540495	4	HEX NUT ISO 10511 M12 A4	SECHSKANTMUTTER		
35	432003714	2	DOWEL PIN ISO 8752 5X16	SPANNSTIFT		
36	993334214	2	BRACKET	BUEGEL		
38	406517714	4	HEX SCREW ISO 4017 M12X20 A4-70	SECHSKANTSCHRAUBE		
40	404251014	4	SOCKET HEAD SCREW ISO 4762 M6X35 A4-7	ZYLINDERSCHRAUBE		
41	11294517	5	ROPE GUARD CPL ⇨ ❑ 530	SEILSCHUTZ KPL		
45	918591014	1	ANCHORING ROD CPL ⇨ ❑ 493	HALTESTANGE KPL		
51	790512414	2	GRATING	GITTERROST		
52	11283913	8	FIXING CLAMP ⇨ ❑ 486	BEFESTIGUNGSCHELLE		
53	970854303	2	WP	WP		
54	10098157	6	DISH	TELLER		
56	406508014	4	HEX SCREW ISO 4017 M8X45 A4-70	SECHSKANTSCHRAUBE		
59	11232907	2	SUPPORT CPL ⇨ ❑ 494	AUFLAGE KPL		
61	420001014	4	WASHER ISO 7089 8 A4	SCHEIBE		
62	262103101	0.92	FLEXIBLE EDGE PROTECTOR	KANTENSCHUTZ FLEXIBEL		
68	406532614	4	HEX SCREW ISO 4017 M6X20 A4-70	SECHSKANTSCHRAUBE		
69	420000414	12	WASHER ISO 7089 6 A4	SCHEIBE		
70	10540492	8	HEX NUT ISO 10511 M6 A4	SECHSKANTMUTTER		
71	421103414	2	WASHER DIN EN 28738 55 ST;	SCHEIBE		

OHNE BILD
WITHOUT ILLUSTRATION
SANS PLANCHE
SIN FIG.
SEM ILUSTRAÇÃO
БЕЗ ИЗОБРАЖЕНИЯ

600000

Pos.	Item	Quantity	Description	Bezeichnung	Serie	K
10	11286324	1	ANGLE TRANSMITTER	WINKELGEBER		
11	693126214	2	PRESSURE SENSOR	DRUCKAUFNEHMER		
12	406501314	3	HEX SCREW ISO 4017 M8X30 A4-70	SECHSKANTSCHRAUBE		
13	10540493	3	HEX NUT ISO 10511 M8 A4	SECHSKANTMUTTER		
14	10540510	6	WASHER ISO 7093-1 8 A4	SCHEIBE		
21	10576212	1	CABLE LOOM	KABELSATZ		
22	404251014	4	SOCKET HEAD SCREW ISO 4762 M6X35 A4-7	ZYLINDERSCHRAUBE		
23	10540492	4	HEX NUT ISO 10511 M6 A4	SECHSKANTMUTTER		
24	420000414	4	WASHER ISO 7089 6 A4	SCHEIBE		
31	919252814	1	CABLE DRUM ⇨ ❑ 456	KABELTROMMEL		
32	406517314	4	HEX SCREW ISO 4017 M12X30 A4-70	SECHSKANTSCHRAUBE		
33	10540495	4	HEX NUT ISO 10511 M12 A4	SECHSKANTMUTTER		
34	420001514	8	WASHER ISO 7089 12 A4	SCHEIBE		

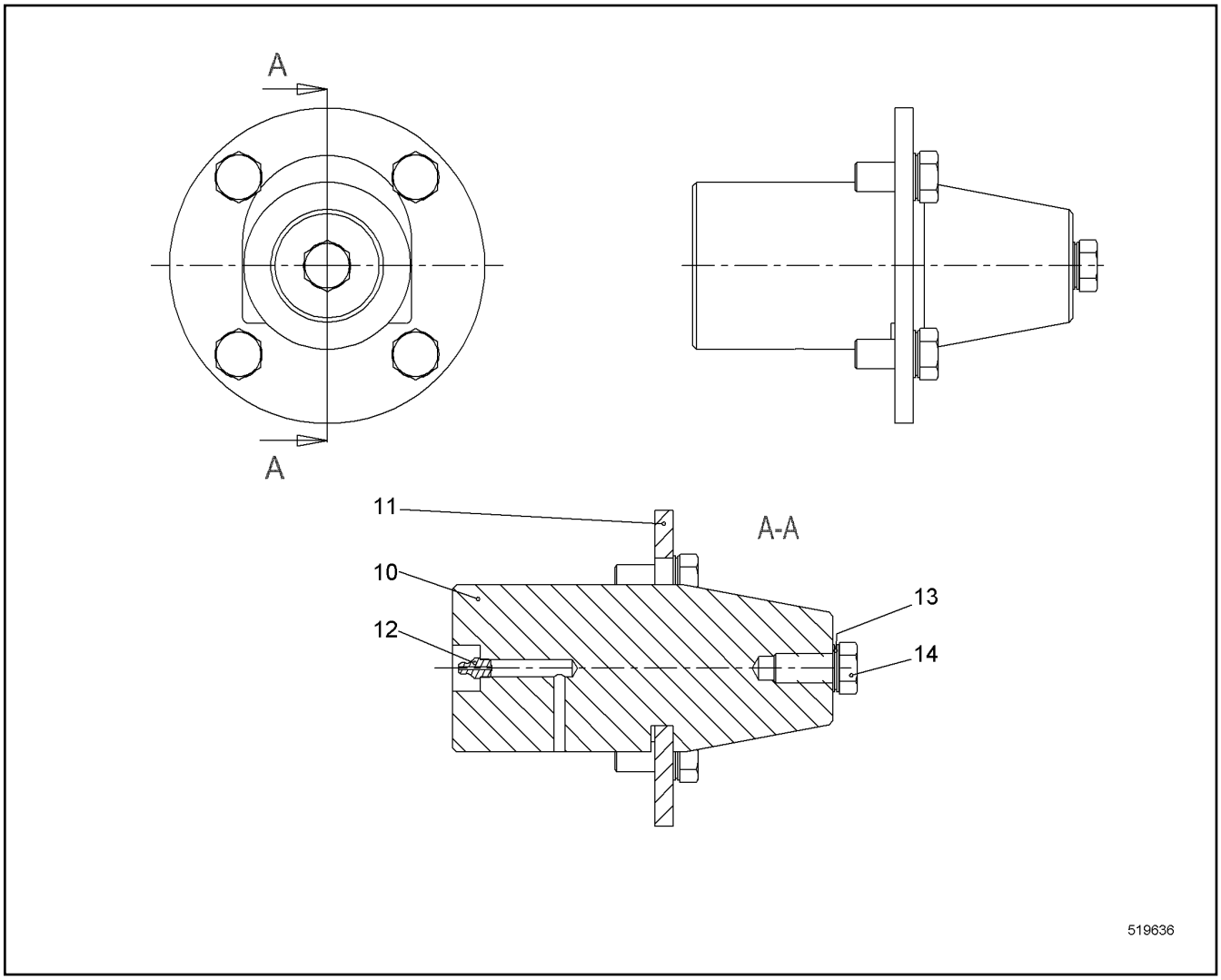

Pos.	Item	Quantity	Description	Bezeichnung	Serie	K
10	10349207	1	PIN 90X205 LHRD900-40;10019758	BOLZEN		
11	950285614	1	PLATE	BLECH		
12	7743242	1	HYDRAULIC-TYPE LUBRICAT.NIPPLE	KEGELSCHMIERNIPPEL		
13	10536597	5	LOCK WASHER 16 27MNCRB5-2;EN 10083	SICHERUNGSSCHEIBE		
14	10539317	5	HEX SCREW ISO 4017 M16X35 10.9	SECHSKANTSCHRAUBE		

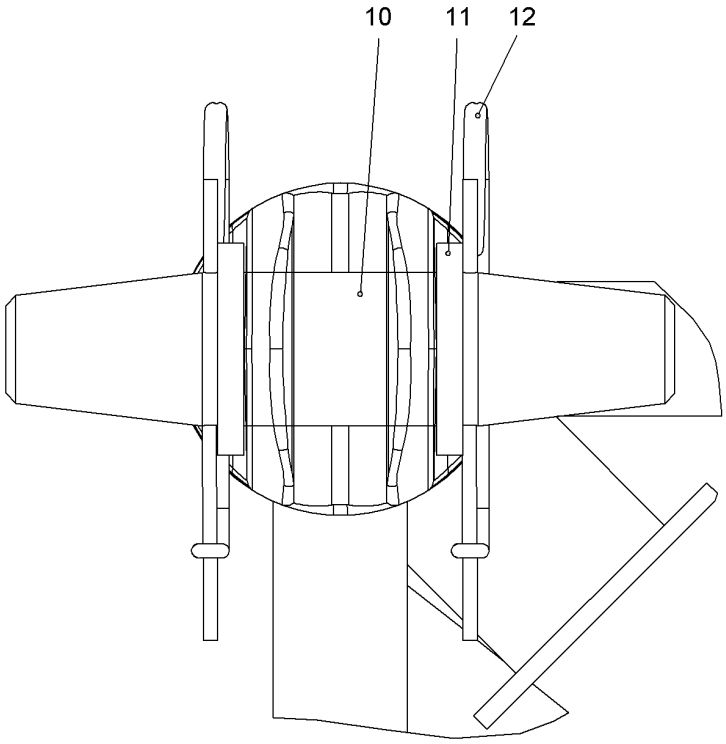

Pos.	Item	Quantity	Description	Bezeichnung	Serie	K
10	949886314	1	PIN 65X284 LHRD900-40;10019758	BOLZEN		
11	421103614	2	WASHER DIN EN 28738 65 ST;	SCHEIBE		
12	433105008	2	RETAINING SPRING DIN 2194 6MM FS	SICHERUNGSFEDER		

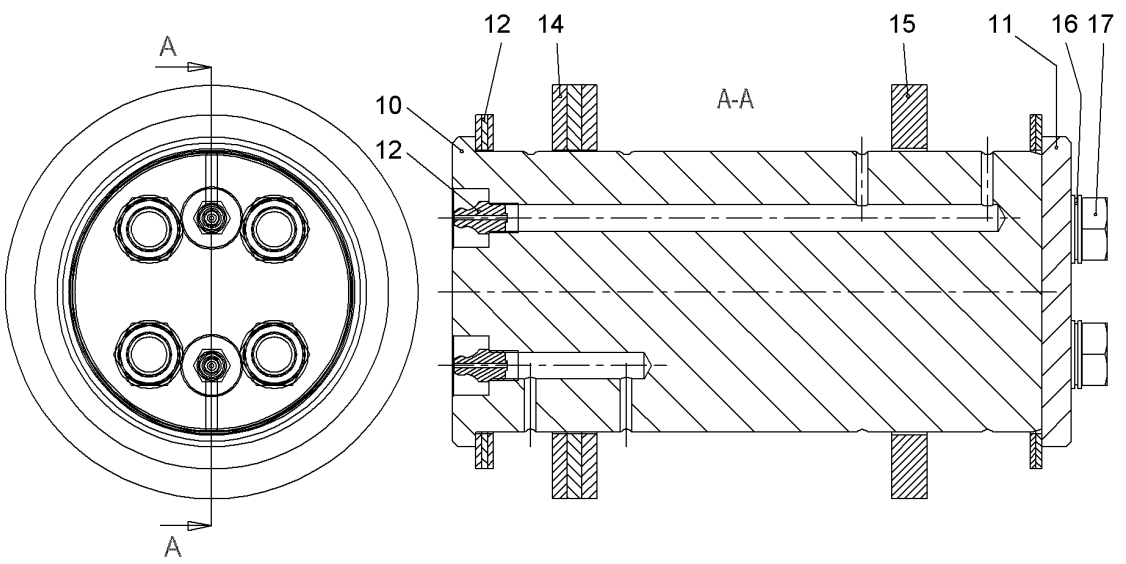

Pos.	Item	Quantity	Description	Bezeichnung	Serie	K
10	950290614	1	PIN	BOLZEN		
11	956856614	1	COVER	DECKEL		
12	7743242	2	HYDRAULIC-TYPE LUBRICAT.NIPPLE	KEGELSCHMIERNIPPEL		
13	289073714	5	WASHER 96/120X2 PA 6 G	SCHEIBE		
14	289073814	3	WASHER 96/140X5 PA 6 G	SCHEIBE		
16	10536583	4	LOCK WASHER 14 27MNCRB5-2;EN 10083	SICHERUNGSSCHEIBE		
17	10539297	4	HEX SCREW ISO 4017 M14X30 10.9	SECHSKANTSCHRAUBE		

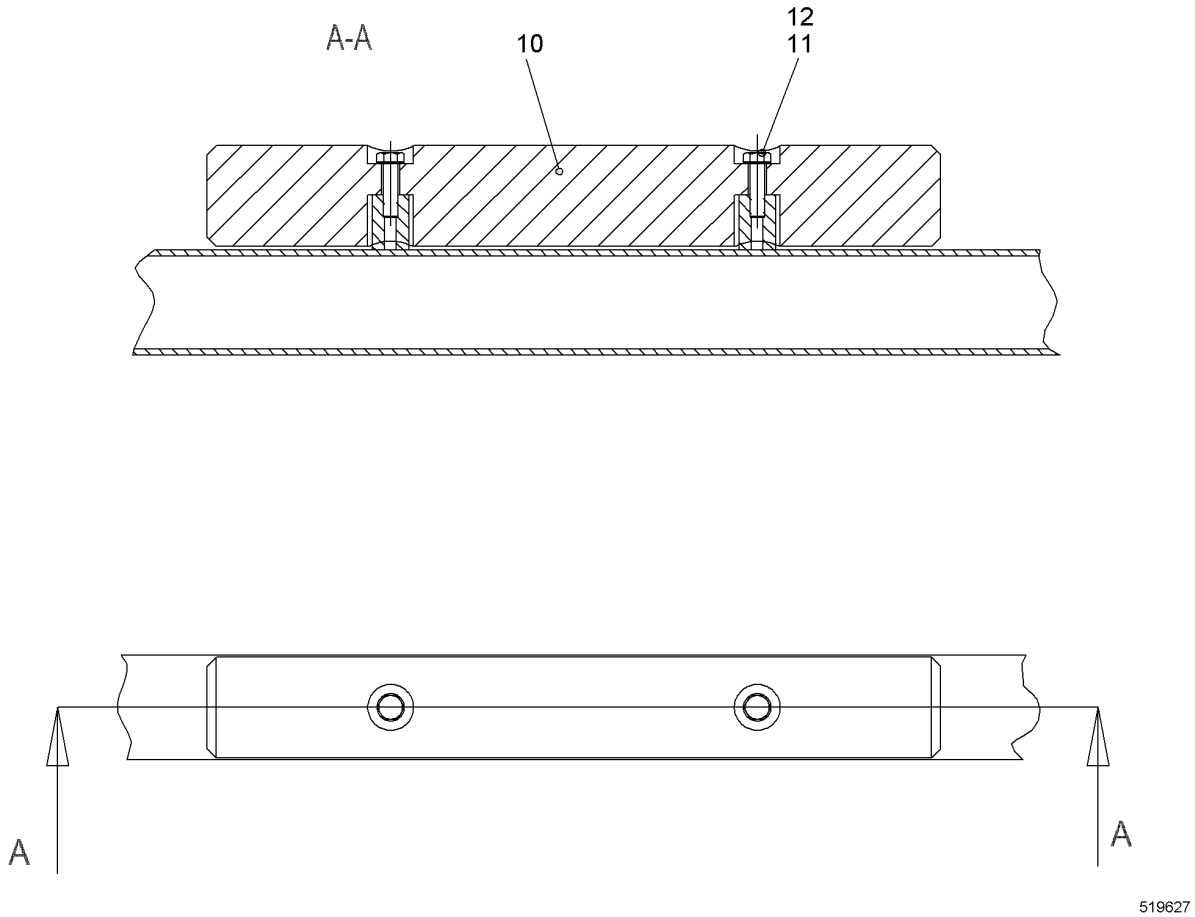

Pos.	Item	Quantity	Description	Bezeichnung	Serie	K
10	289012914	1	STRIP	LEISTE		
11	406501314	2	HEX SCREW ISO 4017 M8X30 A4-70	SECHSKANTSCHRAUBE		
12	10447017	2	LOCKING RING 8	SICHERUNGSRING		

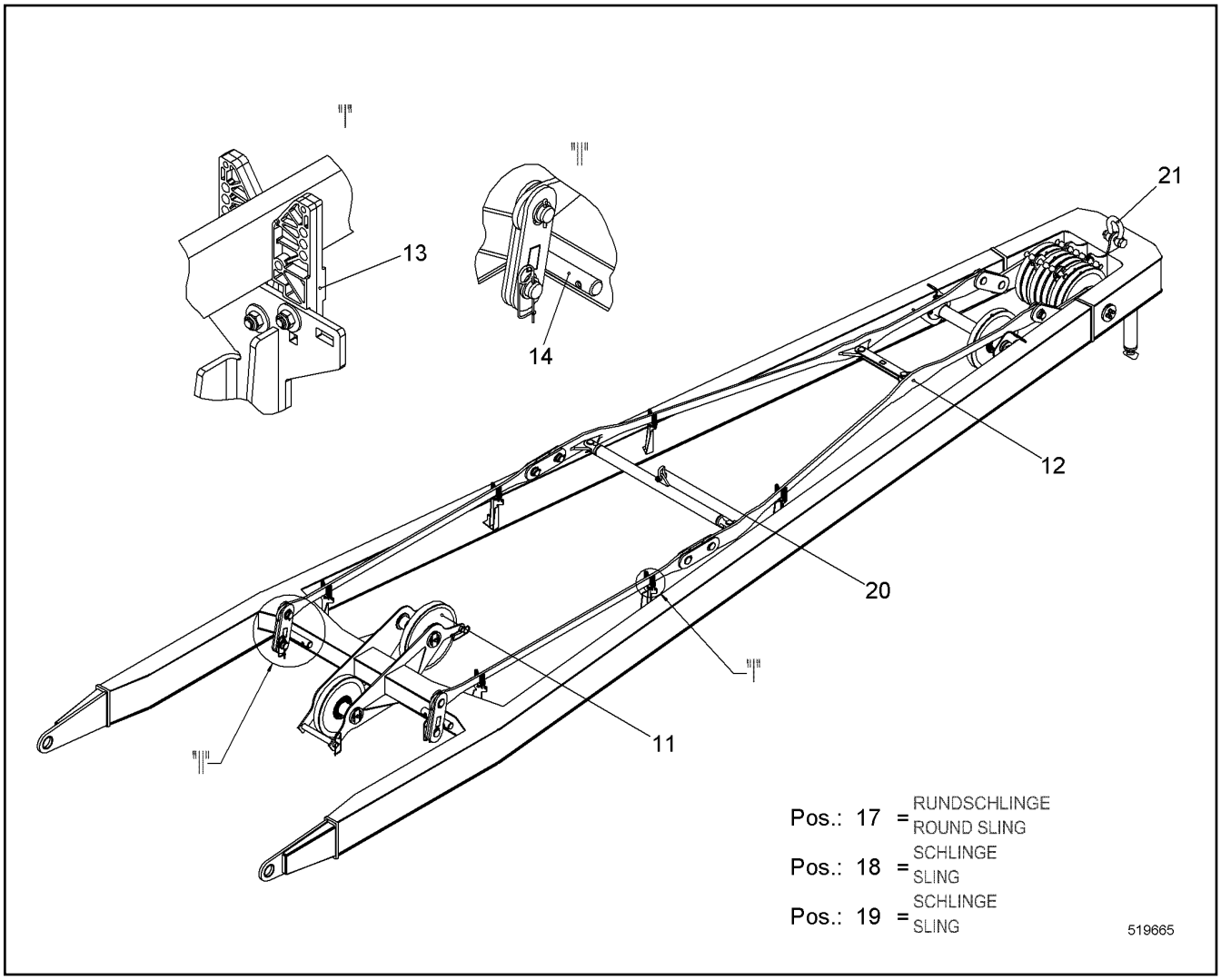

Pos.	Item	Quantity	Description	Bezeichnung	Serie	K
11	11294267	1	MOUNTING PARTS ⇨ ❑ 532	MONTAGETEILE		
12	992635914	1	ANCHORING ROD CPL ⇨ ❑ 534	HALTESTANGE KPL		
13	11237498	6	SUPPORT CPL ⇨ ❑ 477	AUFLAGE KPL		
14	11294884	2	ROPE GUARD CPL ⇨ ❑ 536	SEILSCHUTZ KPL		
15	993503114	1	ROPE GUARD CPL ⇨ ❑ 537	SEILSCHUTZ KPL		
17	10350540	1	ROUND SLING	RUNDSCHLINGE		
18	805090714	1	SLING	SCHLINGE		
19	805091714	1	SLING	SCHLINGE		
20	773931314	1	SHACKLE	SCHAEKEL		
21	773959914	1	SHACKLE	SCHAEKEL		

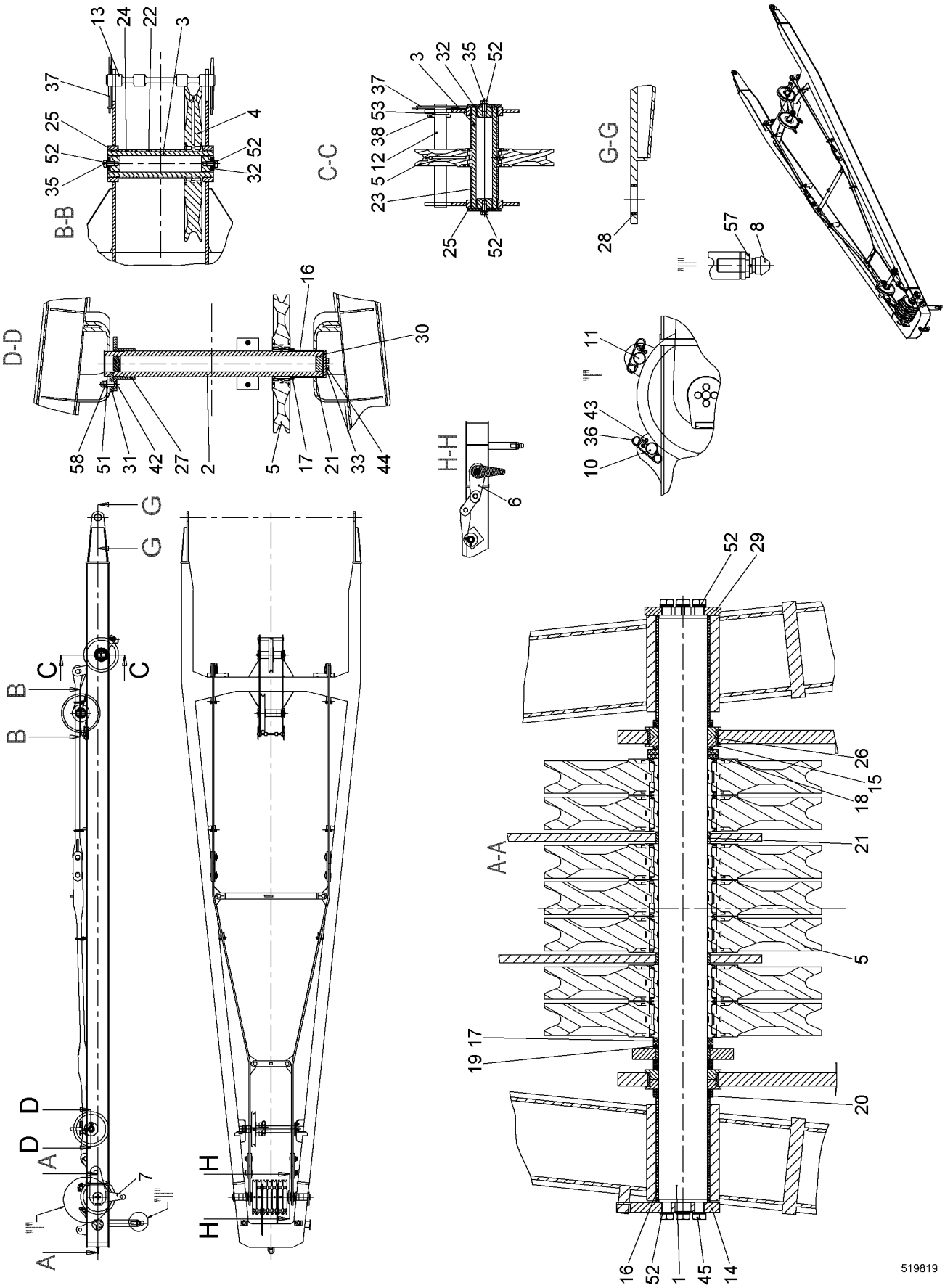
B-B
C-C
G-G
D-D
H-H
A-A
519819

Pos.	Item	Quantity	Description	Bezeichnung	Serie	K
1	10349125	1	PIN 90X1079.5 LHRD900-40;10019758	BOLZEN		
2	993191014	1	AXLE ST.CONST.	ACHSE SCHWK		
3	918684114	2	AXLE ST.CONST.	ACHSE SCHWK		
4	919279914	1	ROPE PULLEY CPL	SEILROLLE KPL		
5	915523714	9	ROPE PULLEY CPL	SEILROLLE KPL		
6	950161014	2	PLATE	BLECH		
7	950287214	1	PLATE	BLECH		
8	919916514	2	LIMIT STOP ST.CONST.	ANSCHLAG SCHWK		
10	10349201	1	ROPE GUARD	SEILSCHUTZ		
11	10349202	1	ROPE GUARD	SEILSCHUTZ		
12	951577814	1	ROPE GUARD TUBE	SEILSCHUTZROHR		
13	957714914	1	SHAFT	WELLE		
15	950298014	4	COLLER BUSHING 90/140X18 S355J2H;EN 10	BUNDBUCHSE		
16	10349225	7	BUSHING RD100/90.5X64.5 POM	BUCHSE		
17	10224403	3	BUSHING RD110/90.5X13 POM	BUCHSE		
18	10224404	2	BUSHING RD130/90.5X8.5 POM	BUCHSE		
19	10224406	4	BUSHING RD110/90.5X6 POM	BUCHSE		
20	10224407	4	BUSHING RD110/90.5X4.85 POM	BUCHSE		
21	949721314	5	BUSHING 100/90X22 S355J2H;EN 10210-1	BUCHSE		
22	949740814	1	BUSHING 90.5/101.6X173 LHR355-20;1001972	BUCHSE		
23	949748414	2	BUSHING 90.5/101.6X120 LHR355-20;1001972	BUCHSE		
24	949740914	1	BUSHING 90.5/101.6X67 LHR355-20;10019728	BUCHSE		
25	949741014	4	BUSHING 90/100X33 S355J2H;EN 10210-1	BUCHSE		
26	10349224	2	BUSHING RD130/120X26 KUNSTSTOFF	BUCHSE		
27	11245109	1	BUSHING 96.2/110X80 PA 6 G	BUCHSE		
28	10561944	2	BUSHING DIN 1850,ISO 4379 95/110X25 SWB	BUCHSE		
29	970553303	1	COVER	DECKEL		
30	949741114	1	COVER	DECKEL		
31	949741314	1	WELD PLATE	ANSCHWEISSPLATTE		
32	949742714	4	WELD PLATE	ANSCHWEISSPLATTE		
33	10536579	4	LOCK WASHER 10 254 SMO;EN 10088-3	SICHERUNGSSCHEIBE		
35	10539316	4	HEX SCREW ISO 4017 M16X30 10.9	SECHSKANTSCHRAUBE		
36	433101208	4	RETAINING SPRING 4MM	SICHERUNGSFEDER		
37	433102508	3	RETAINING SPRING 5MM	SICHERUNGSFEDER		
38	433009114	1	SPLIT PIN ISO 1234 8X63 A4	SPLINT		
42	408602614	2	COUNTERSUNK SCREW ISO 10642 M16X60 8	SENKSCHRAUBE		
43	10539482	8	SOCKET HEAD SCREW ISO 4762 M8X12 A4-7	ZYLINDERSCHRAUBE		
44	406511914	4	HEX SCREW ISO 4017 M10X25 A4-70	SECHSKANTSCHRAUBE		
45	10539317	8	HEX SCREW ISO 4017 M16X35 10.9	SECHSKANTSCHRAUBE		
51	10544172	2	WASHER ISO 7089 16	SCHEIBE		
52	10536597	12	LOCK WASHER 16 27MNCRB5-2;EN 10083	SICHERUNGSSCHEIBE		
53	421103214	1	WASHER DIN EN 28738 45 ST;	SCHEIBE		
57	411805514	2	CROWN NUT DIN 937 M48X1.5 ST	KRONENMUTTER		
58	10544155	2	HEX NUT ISO 10511 M16 10	SECHSKANTMUTTER		

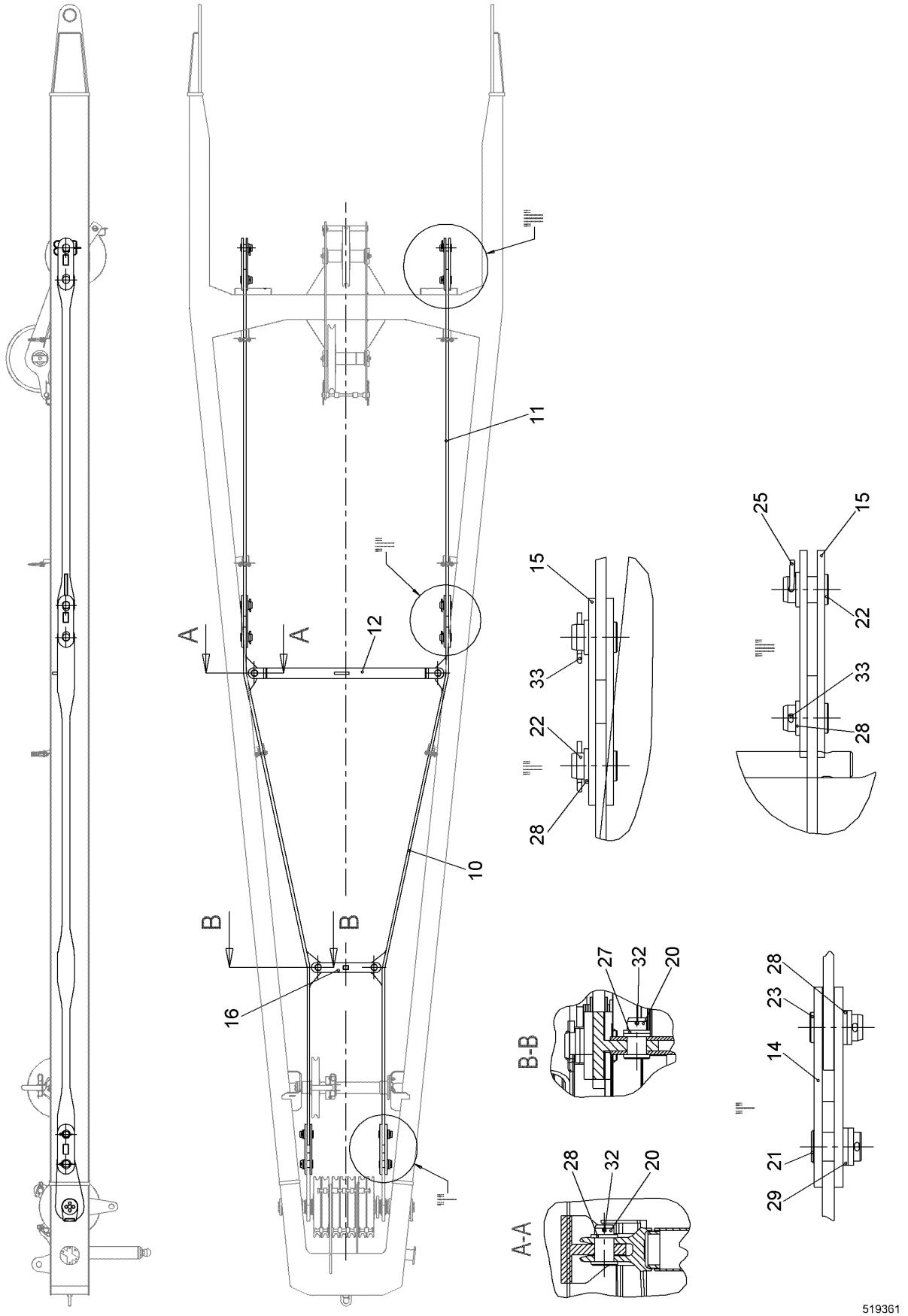

8.7.2015 519361	**138281_ETK_001**	534 (1/2)
LIEBHERR	**ANCHORING ROD CPL** **HALTESTANGE KPL**	**99 26 359 14**

Pos.	Item	Quantity	Description	Bezeichnung	Serie	K
10	993081414	2	TRAVERSE	TRAVERSE		
11	949910714	2	ANCHORING ROD	HALTESTANGE		
12	993081514	1	COMPRESSION BAR	DRUCKSTAB		
14	958281314	4	COUPLING LINK	KOPPELLASCHE		
15	949911014	8	COUPLING LINK	KOPPELLASCHE		
16	950113314	2	COUPLING LINK	KOPPELLASCHE		
20	945931614	4	PIN 55X85X66 LHRD900-40;10019758	BOLZEN		
21	942976214	2	PIN 68X105 LHRD900-40;10019758	BOLZEN		
22	949196614	8	PIN 63X95 LHRD900-40;10019758	BOLZEN		
23	949982414	2	PIN 63X110 LHRD900-40;10019758	BOLZEN		
25	433105008	2	RETAINING SPRING DIN 2194 6MM FS	SICHERUNGSFEDER		
27	421103014	6	WASHER DIN EN 28738 40 ST	SCHEIBE		
28	421103414	12	WASHER DIN EN 28738 55 ST;	SCHEIBE		
29	421103514	4	WASHER DIN EN 28738 60 ST;	SCHEIBE		
32	433009414	4	SPLIT PIN ISO 1234 8X80 A4	SPLINT		
33	433010314	10	SPLIT PIN ISO 1234 10X80 A4	SPLINT		

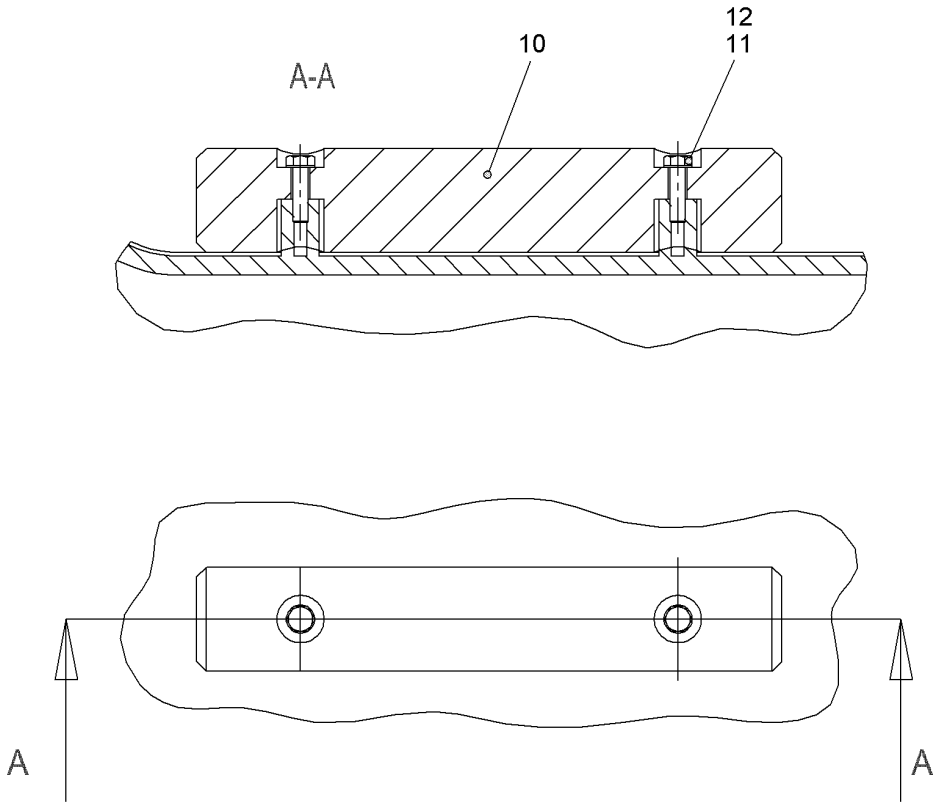

Pos.	Item	Quantity	Description	Bezeichnung	Serie	K
10	10590801	1	STRIP	LEISTE		
11	406501314	2	HEX SCREW ISO 4017 M8X30 A4-70	SECHSKANTSCHRAUBE		
12	10447017	2	LOCKING RING 8	SICHERUNGSRING		

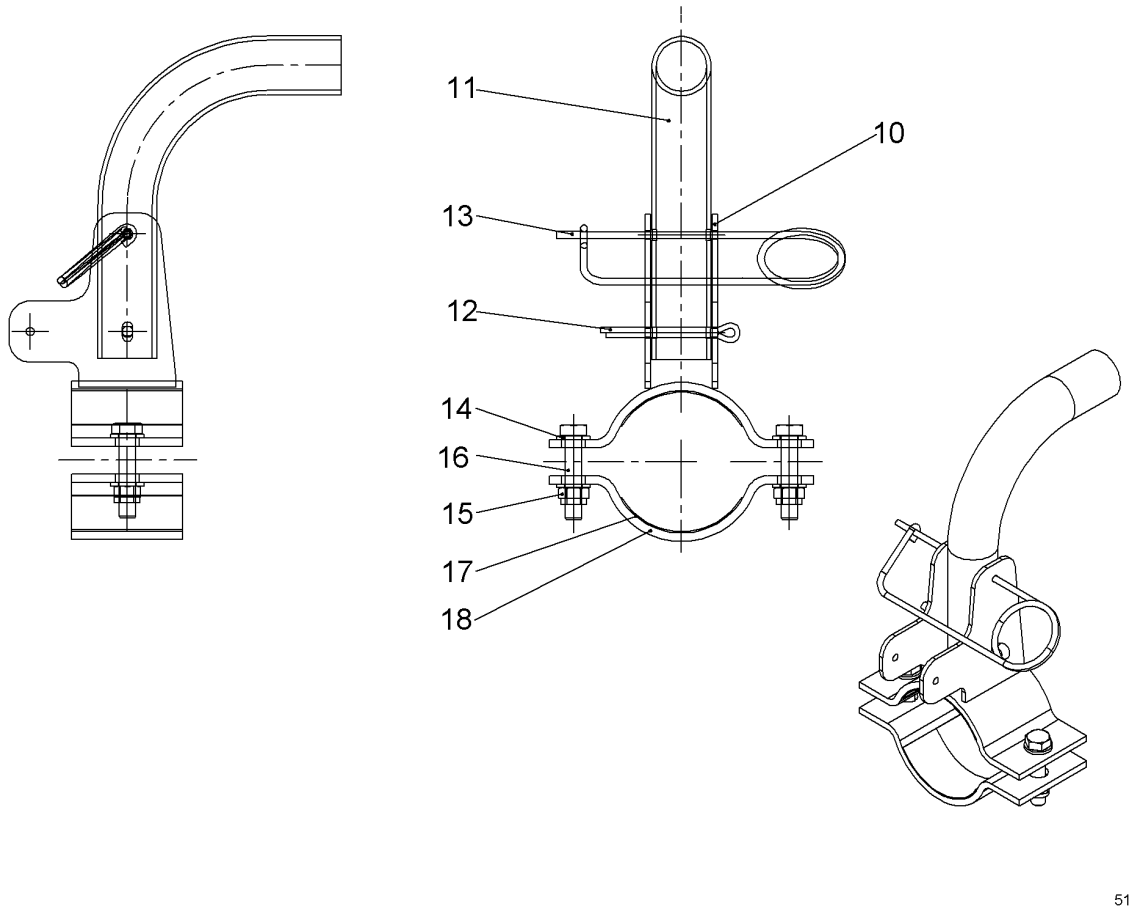

Pos.	Item	Quantity	Description	Bezeichnung	Serie	K
10	950562214	2	PLATE	BLECH		
11	950562414	1	ROPE GUARD TUBE	SEILSCHUTZROHR		
12	433009414	1	SPLIT PIN ISO 1234 8X80 A4	SPLINT		
13	433102508	1	RETAINING SPRING 5MM	SICHERUNGSFEDER		
14	10536581	4	LOCK WASHER 12 254 SMO;EN 10088-3	SICHERUNGSSCHEIBE		
15	411516914	2	HEX NUT ISO 4032 M12 A4-70	SECHSKANTMUTTER		
16	10538828	2	HEX SCREW ISO 4017 M12X60 A4-70	SECHSKANTSCHRAUBE		
17	289040314	4	RUBBER	GUMMI		

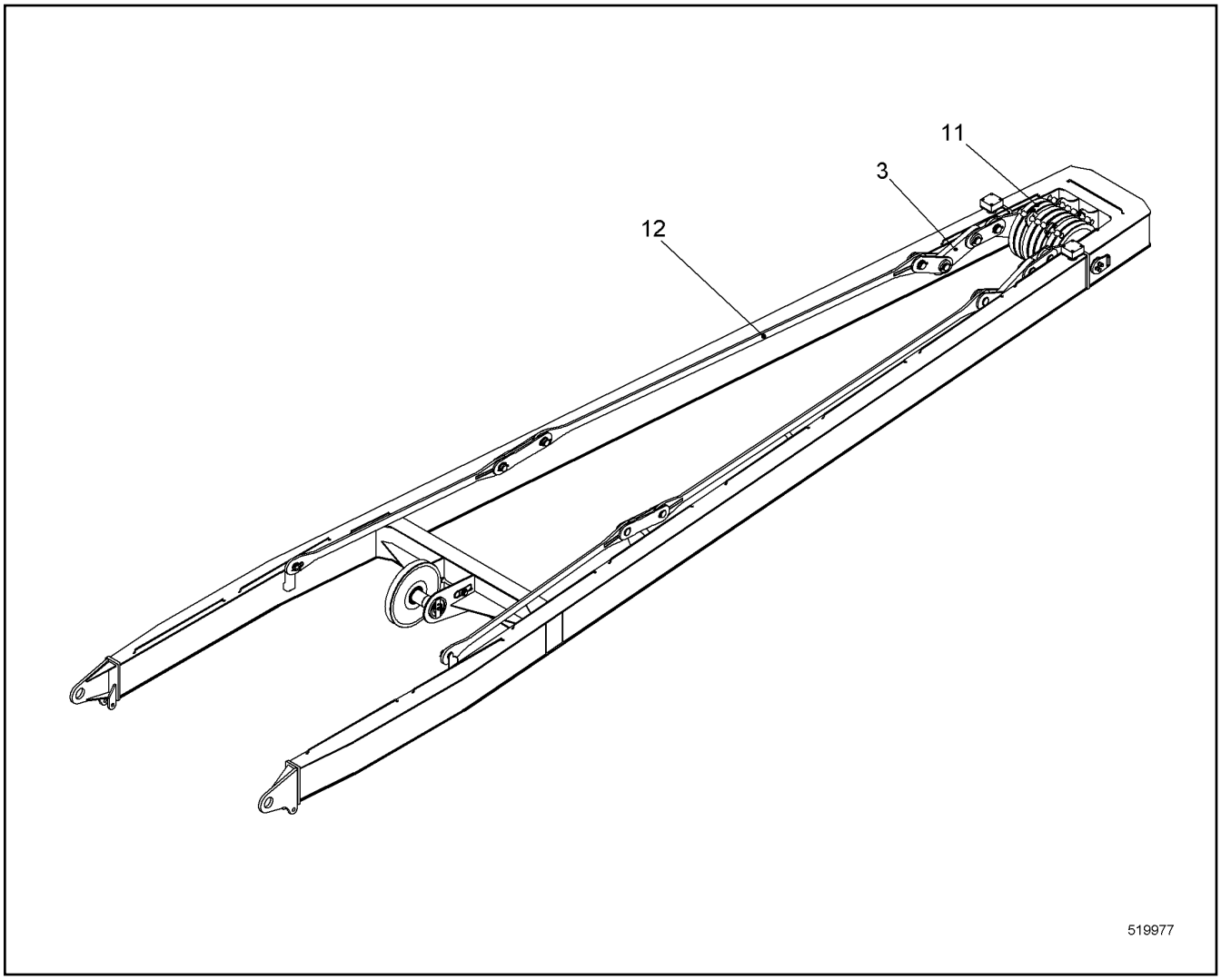

Pos.	Item	Quantity	Description	Bezeichnung	Serie	K
3	11313817	1	A-FRAME ELECTRICS ⇨ ❑ 539	A-BOCK EL		
11	11299384	1	MOUNTING PARTS ⇨ ❑ 540	MONTAGETEILE		
12	10599681	1	ANCHORING ROD CPL ⇨ ❑ 542	HALTESTANGE KPL		

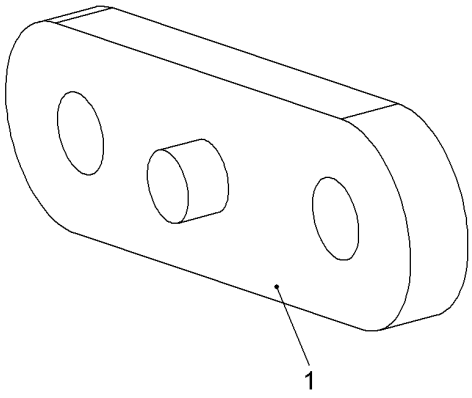

519966

Pos.	Item	Quantity	Description	Bezeichnung	Serie	K
1	10525837	2	FORCE MEASURING STRAP	KRAFTMESSLASCHE		

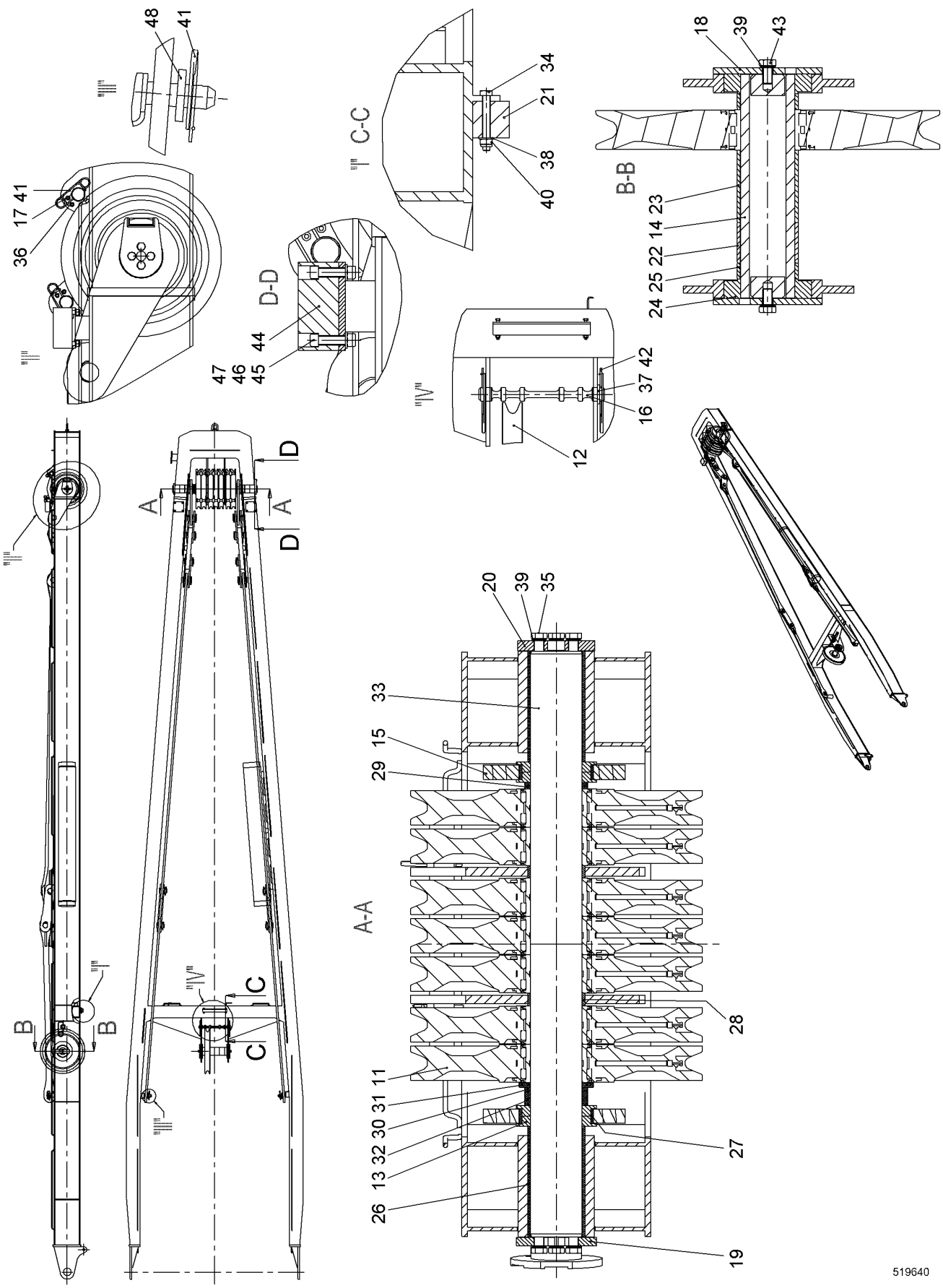

8.7.2015 519640 LIEBHERR	**138281_ETK_001** **MOUNTING PARTS** **MONTAGETEILE**	540 (1/2) **11 29 938 4**

Pos.	Item	Quantity	Description	Bezeichnung	Serie	K
11	915523714	7	ROPE PULLEY CPL	SEILROLLE KPL		
12	919279914	1	ROPE PULLEY CPL	SEILROLLE KPL		
13	950298014	4	COLLER BUSHING 90/140X18 S355J2H;EN 10	BUNDBUCHSE		
14	918684114	1	AXLE ST.CONST.	ACHSE SCHWK		
16	957511614	1	SHAFT	WELLE		
17	10349201	2	ROPE GUARD	SEILSCHUTZ		
18	949752914	2	WELD PLATE	ANSCHWEISSPLATTE		
19	970553303	1	COVER	DECKEL		
21	289008514	1	STRIP	LEISTE		
22	949740914	1	BUSHING 90.5/101.6X67 LHR355-20;10019728	BUCHSE		
23	949748414	1	BUSHING 90.5/101.6X120 LHR355-20;1001972	BUCHSE		
24	949752814	2	BUSHING EN 10210-2 90/145X33 S355J2H;EN	BUCHSE		
25	957140114	2	BUSHING 90.5/101.6X27 LHR355-20;10019728	BUCHSE		
26	10349225	6	BUSHING RD100/90.5X64.5 POM	BUCHSE		
27	10349224	2	BUSHING RD130/120X26 KUNSTSTOFF	BUCHSE		
28	949721314	2	BUSHING 100/90X22 S355J2H;EN 10210-1	BUCHSE		
29	10224407	1	BUSHING RD110/90.5X4.85 POM	BUCHSE		
30	10224406	2	BUSHING RD110/90.5X6 POM	BUCHSE		
31	10224404	1	BUSHING RD130/90.5X8.5 POM	BUCHSE		
32	10224403	2	BUSHING RD110/90.5X13 POM	BUCHSE		
33	10349222	1	PIN 90X1022.5 LHRD900-40;10019758	BOLZEN		
34	10538808	2	HEX SCREW ISO 4017 M8X60 A4-70	SECHSKANTSCHRAUBE		
35	10539317	8	HEX SCREW ISO 4017 M16X35 10.9	SECHSKANTSCHRAUBE		
36	10539482	8	SOCKET HEAD SCREW ISO 4762 M8X12 A4-7	ZYLINDERSCHRAUBE		
37	421103214	2	WASHER DIN EN 28738 45 ST;	SCHEIBE		
38	420001014	2	WASHER ISO 7089 8 A4	SCHEIBE		
39	10536597	10	LOCK WASHER 16 27MNCRB5-2;EN 10083	SICHERUNGSSCHEIBE		
40	10540493	2	HEX NUT ISO 10511 M8 A4	SECHSKANTMUTTER		
41	433101208	6	RETAINING SPRING 4MM	SICHERUNGSFEDER		
42	433102508	2	RETAINING SPRING 5MM	SICHERUNGSFEDER		
43	10539316	2	HEX SCREW ISO 4017 M16X30 10.9	SECHSKANTSCHRAUBE		
44	971216403	2	SHEET	PLATTE		
45	10539520	8	SOCKET HEAD SCREW ISO 4762 M12X55 A4-7	ZYLINDERSCHRAUBE		
46	10540495	8	HEX NUT ISO 10511 M12 A4	SECHSKANTMUTTER		
47	420001514	8	WASHER ISO 7089 12 A4	SCHEIBE		
48	4600667	2	WASHER DIN 7349 31	SCHEIBE		

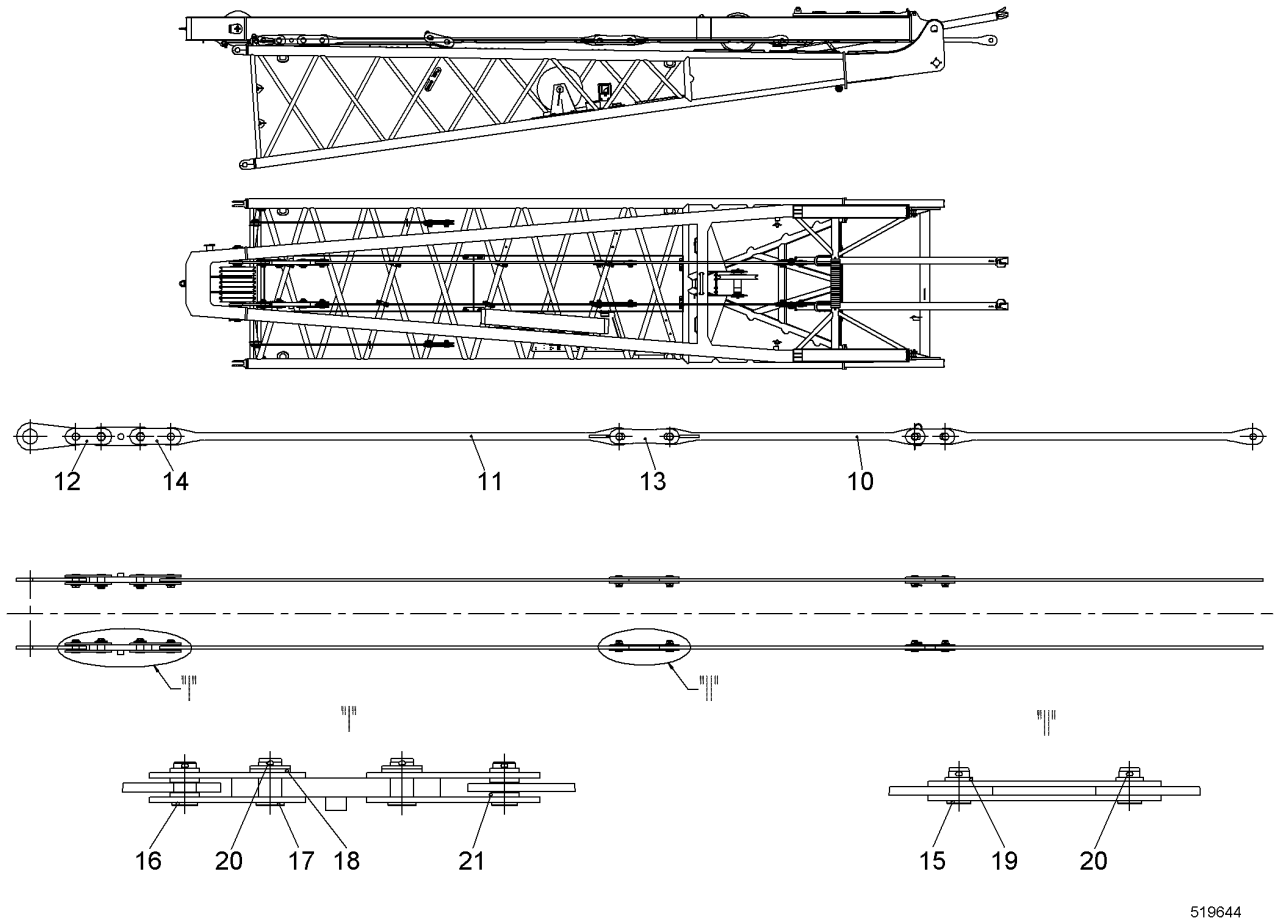

Pos.	Item	Quantity	Description	Bezeichnung	Serie	K
10	949912814	2	ANCHORING ROD	HALTESTANGE		
11	10349541	2	ANCHORING ROD	HALTESTANGE		
13	956814114	4	COUPLING LINK	KOPPELLASCHE		
14	950361114	4	COUPLING LINK	KOPPELLASCHE		
15	949196614	4	PIN 63X95 LHRD900-40;10019758	BOLZEN		
16	950365014	4	PIN 68X115 LHRD900-40;10019758	BOLZEN		
17	957896414	4	PIN 75X125 LHRD900-40;10019758	BOLZEN		
18	420004501	8	WASHER ISO 7089 56	SCHEIBE		
19	421103414	4	WASHER DIN EN 28738 55 ST;	SCHEIBE		
20	433010314	12	SPLIT PIN ISO 1234 10X80 A4	SPLINT		
21	421103514	12	WASHER DIN EN 28738 60 ST;	SCHEIBE		

LIEBHERR

8.7.2015
517863

138281_ETK_001

TILTING-BACK SUPPORT NEEDLE
RUECKFALLSTUETZE NADEL

543 (1/2)

10 53 145 5

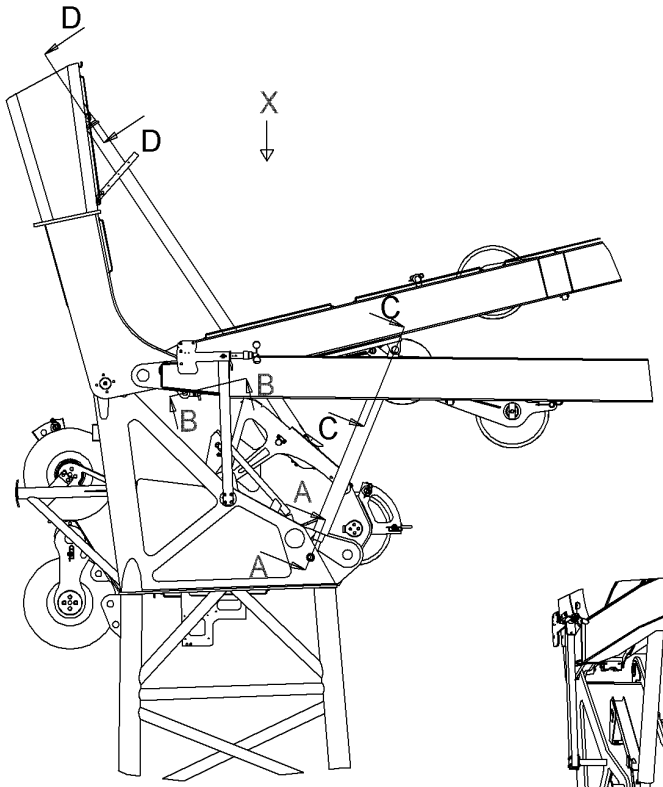

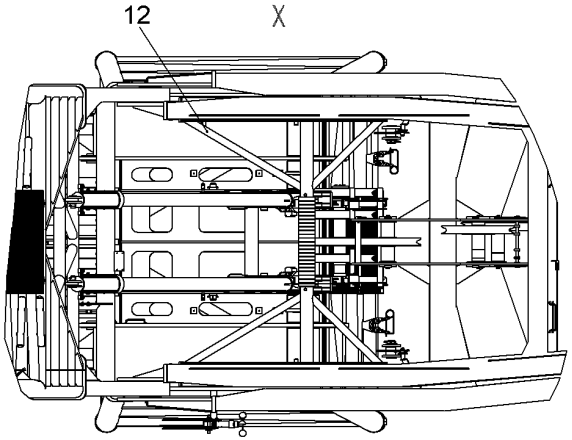

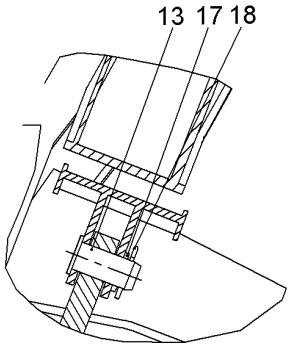

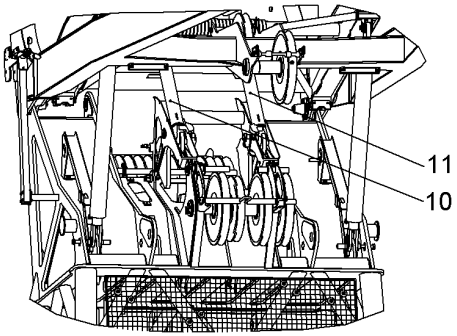

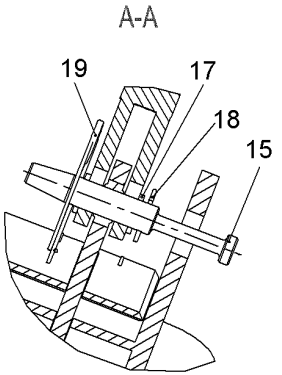

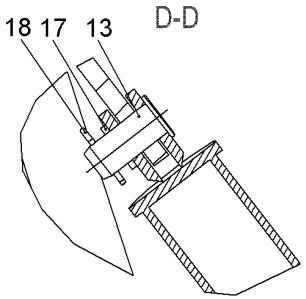

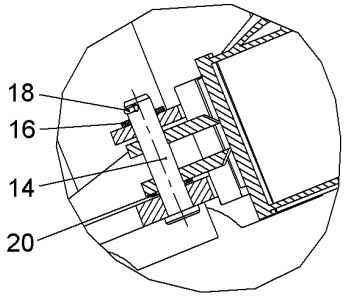

Pos.: 2 = Rueckfallstuetzen Hydraulik / Tilting-back supports hydr rlk

Pos.: 4 = Schlauchliste / Hose list

517863

Pos.	Item	Quantity	Description	Bezeichnung	Serie	K
2	10531456	1	TILTING-BACK SUPPORTS HYDR RFK ⇨ ❑ 545	RUECKFALLSTUETZEN HYDR NR		
4	10531472	1	HOSE LIST ⇨ ❑ 549	SCHLAUCHLISTE		
10	919590114	1	TILT-BACK SUPPORT	RUECKFALLSTUETZE		
11	919590214	1	TILT-BACK SUPPORT	RUECKFALLSTUETZE		
12	993167914	1	SUPPORT SYSTEM CPL ⇨ ❑ 550	ABSTUETZUNG KPL		
13	956215014	4	PIN 55X92 LHRD900-40;10019758	BOLZEN		
14	956929614	2	PIN 40X143 34CRNIMO6;EN 10083	BOLZEN		
15	957563914	2	PIN	BOLZEN		
16	421102614	2	WASHER DIN EN 28738 32 ST;	SCHEIBE		
17	421103014	8	WASHER DIN EN 28738 40 ST	SCHEIBE		
18	433007914	8	SPLIT PIN ISO 1234 6.3X56 A4	SPLINT		
19	433102508	2	RETAINING SPRING 5MM	SICHERUNGSFEDER		
20	11223999	2	WASHER 36/50X3 PA 6 G	SCHEIBE		
22	790380214	1	SIGN	SCHILD		

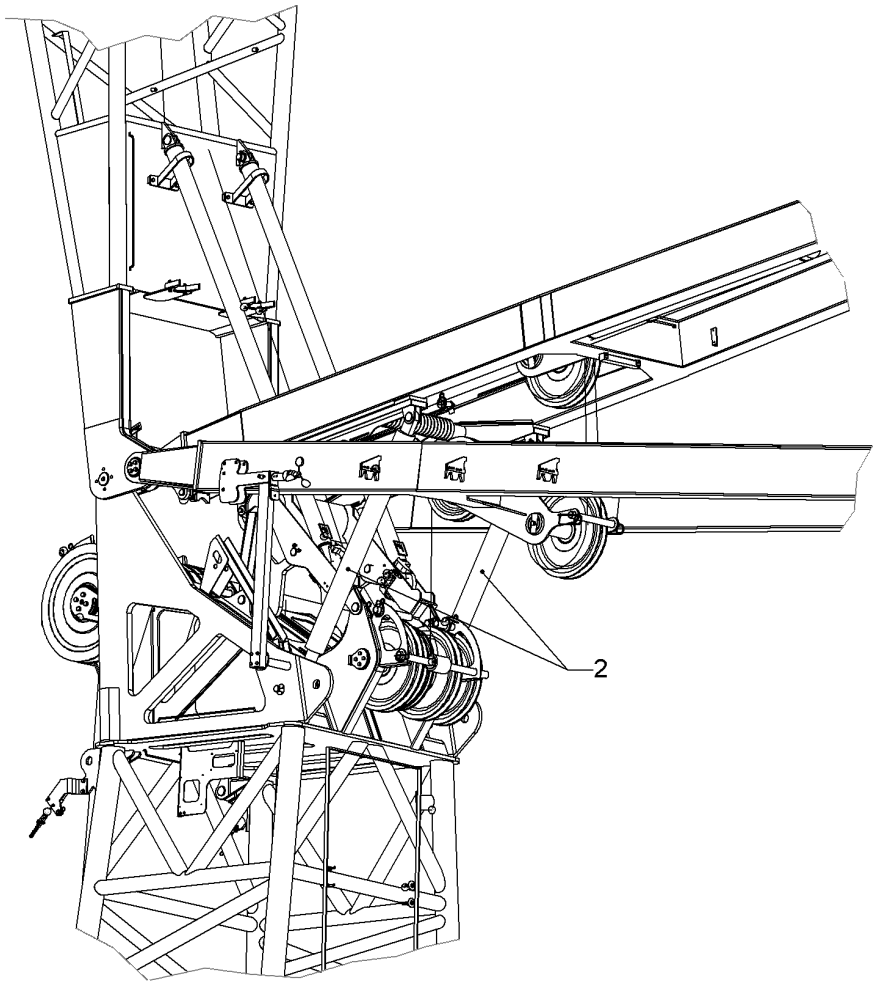

Pos.	Item	Quantity	Description	Bezeichnung	Serie	K
2	10531461	1	TUBING HYDR ⇨ ❑ 546	VERROHRUNG HYDR		

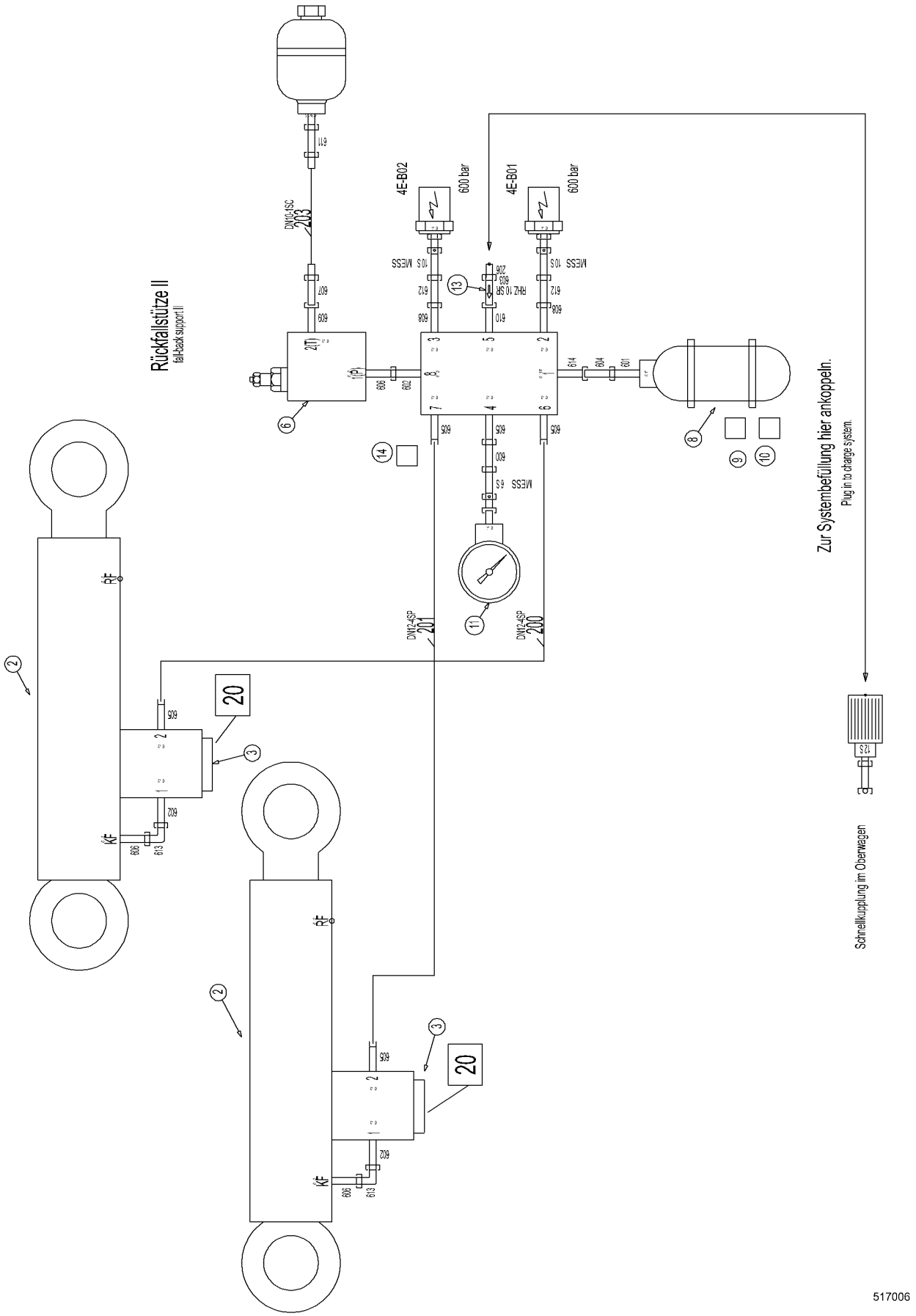
Rückfallstütze II
fall-back support II
4E-B02
600 bar
4E-B01
600 bar
Zur Systembefüllung hier ankoppeln.
Plug in to charge system.
Schnellkupplung im Oberwagen
517006

Pos.	Item	Quantity	Description	Bezeichnung	Serie	K
2	592128014	2	SINGLE-ACTING CYL ⇨ ❑ 548	EINFACHWIRKZYL		
3	592179114	2	CABLE BREAK PREVENTION	LEITUNGSBRUCHSICHERUNG		
5	943958914	1	BLOCK	BLOCK		
6	511639114	1	PRESSURE LIMITING VALVE	DRUCKBEGRENZUNGSVENTIL		
7	502800014	1	EQUALIZING RESERVOIR	AUSGLEICHSBEHAELTER		
8	592128514	1	PISTON TYPE ACCUMULATOR	KOLBENSPEICHER		
9	774259914	6	CLAMP	SCHELLE		
10	10520522	26	HYDRAULIC OIL	HYDRAULIKOEL		
11	750001414	1	PRESSURE GAUGE	MANOMETER		
12	510694314	3	PRESSUREGAUGE DIRECTCONNECTION	MANOMETERDIREKTANSCHLUS		
13	511458814	1	NON-RETURN VALVE	RUECKSCHLAGVENTIL		
14	964450414	1	ANGLE	WINKEL		
204	510695314	1	GAUGE CONNECTION	MESSSTUTZEN		
205	510694514	2	GAUGE CONNECTION	MESSSTUTZEN		
206	477700414	1	FLANGE JOINT	VERSCHRAUBUNG		
600	485432914	1	FLANGE JOINT	VERSCHRAUBUNG		
601	481930814	1	FLANGE JOINT	VERSCHRAUBUNG		
602	481930614	3	FLANGE JOINT	VERSCHRAUBUNG		
603	247048702	1	FLANGE JOINT	VERSCHRAUBUNG		
604	471033614	1	FLANGE JOINT	VERSCHRAUBUNG		
605	471033214	5	FLANGE JOINT	VERSCHRAUBUNG		
606	471033114	3	FLANGE JOINT	VERSCHRAUBUNG		
607	471032708	1	FLANGE JOINT	VERSCHRAUBUNG		
608	471032608	2	FLANGE JOINT	VERSCHRAUBUNG		
609	247043702	1	FLANGE JOINT	VERSCHRAUBUNG		
610	247043002	1	FLANGE JOINT	VERSCHRAUBUNG		
611	470700714	1	FLANGE JOINT	VERSCHRAUBUNG		
612	485433414	2	FLANGE JOINT	VERSCHRAUBUNG		
613	7617460	2	FLANGE JOINT	VERSCHRAUBUNG		
614	247042702	1	FLANGE JOINT	VERSCHRAUBUNG		

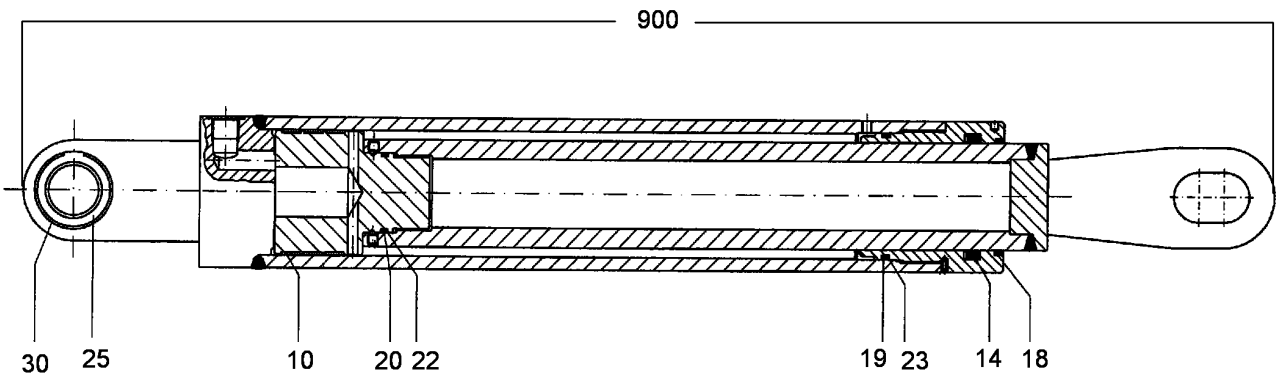

602137

Pos.	Item	Quantity	Description	Bezeichnung	Serie	K
5	11897433	1	PISTON ROD	KOLBENSTANGE		
10	790400414	3	GUIDE RING	FUEHRUNGSRING		
14	790400514	1	ROD SEAL	NUTRING		
18	592181614	1	SCRAPER	ABSTREIFER		
19	790400614	1	O-RING	O-RING		
20	726468814	1	O-RING	O-RING		
22	513325614	1	BACKING RING	BACKRING		
23	790400714	1	BACKING RING	BACKRING		
25	790401014	1	SPHERICAL BEARING	GELENKLAGER		
30	4281037	2	LOCKING RING DIN 472 62X2	SICHERUNGSRING		
40	790297914	1	SEALING RING	DICHTRING		
900	790401414	1	SEALING SET CPL CYL	DS KPL ZYL		

ACHTUNG !
ATTENTION !
ATTENTION !
ATENCIÓN !
ATENÇÃO !
ВНИМАНИЕ

Für Schlauchbestellungen kann über die Schlauchnummer, in der entsprechenden Schlauchliste, die Identnummer festgestellt werden.

For ordering flexible hoses you can find the identification number through the hose-number in the corresponding hose-list.

Pour des ordres de tuyau flexible le nombre d'identification on voit dans la liste de tuyau flexible correspondente.

Para el pedido de manguera, indicar el número de identificación de la manguera de la lista respectiva.

Para se encomendar uma mangueira, consulte o número de identificaçao na respectiva lista de mangueiras.

Для оформления заказов на шланги/рукавы идент. № может быть определен при помощи номера шланга/рукава, указанного в соотетствующем перечне шлангов/рукавов.

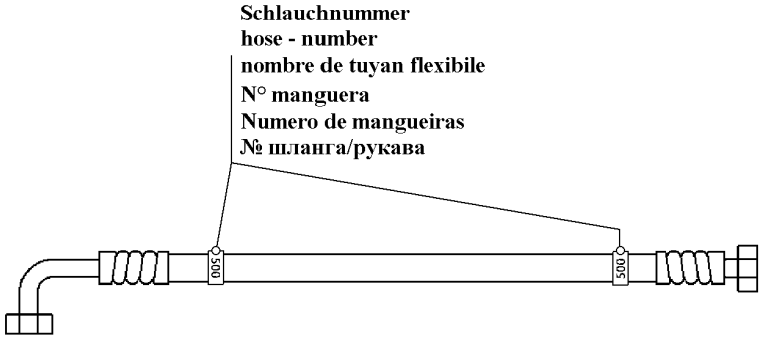

500000

Pos.	Item	Quantity	Description	Bezeichnung	Serie	K
200	993249414	1	HOSE CPL	SCHLAUCH KPL		
201	928348514	1	HOSE CPL	SCHLAUCH KPL		
202	993249514	1	HOSE CPL	SCHLAUCH KPL		
203	992561114	1	HOSE CPL	SCHLAUCH KPL		

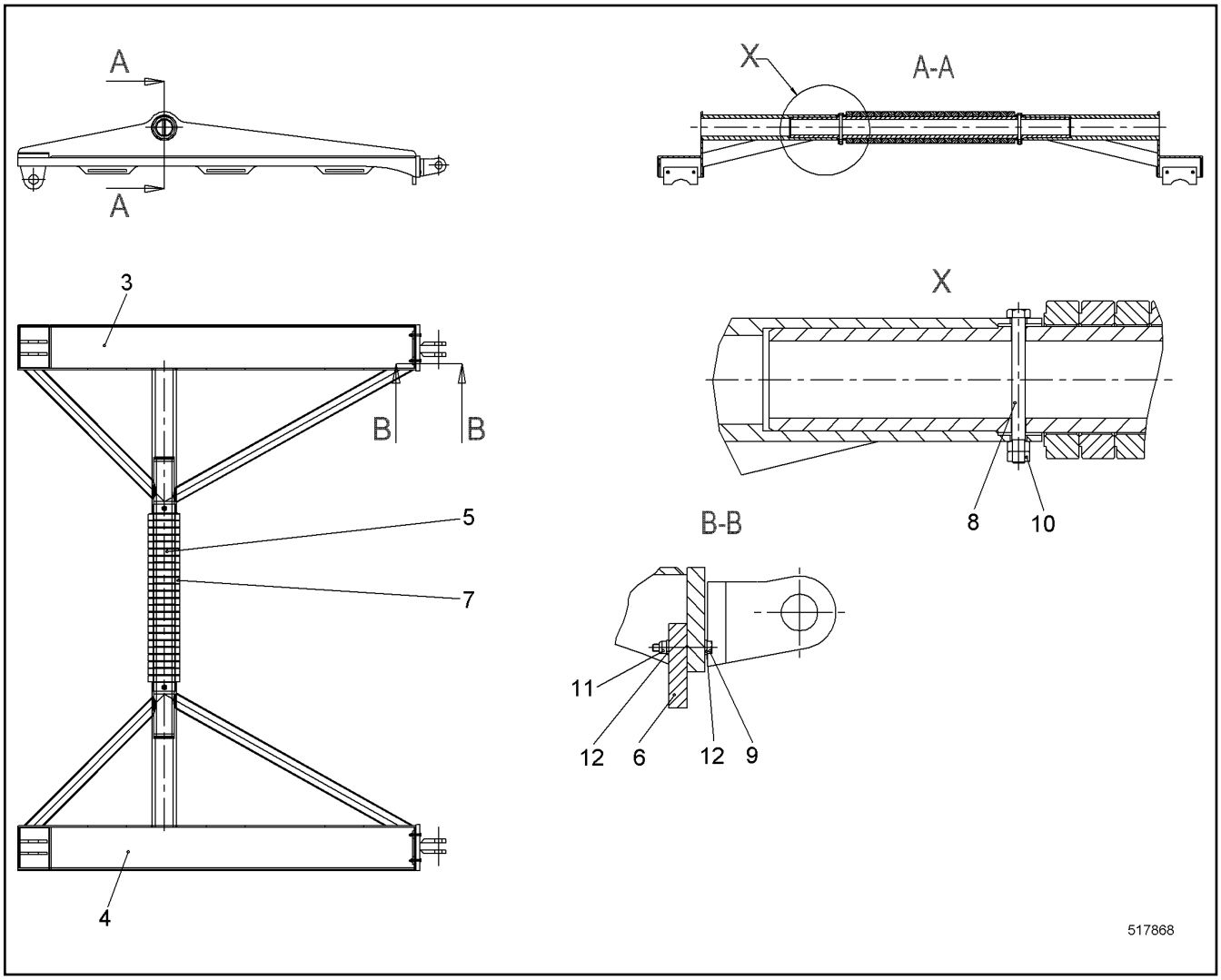

Pos.	Item	Quantity	Description	Bezeichnung	Serie	K
3	992403814	1	SUPPORT SYSTEM ST.CONST.	ABSTUETZUNG SCHWK		
4	993317814	1	SUPPORT SYSTEM ST.CONST.	ABSTUETZUNG SCHWK		
5	950343514	1	TUBE	ROHR		
6	10349600	2	REST	ABLAGE		
7	289007114	24	BUSHING 90/130X29 PA 6 G	BUCHSE		
8	485506014	2	FITTED SCREW DIN 609 M10X120 8.8	PASSSCHRAUBE		
9	10538799	4	HEX SCREW ISO 4017 M6X45 A4-70	SECHSKANTSCHRAUBE		
10	4000383	4	HEX NUT ISO 4032 M10 10	SECHSKANTMUTTER		
11	10540492	4	HEX NUT ISO 10511 M6 A4	SECHSKANTMUTTER		
12	420000414	8	WASHER ISO 7089 6 A4	SCHEIBE		

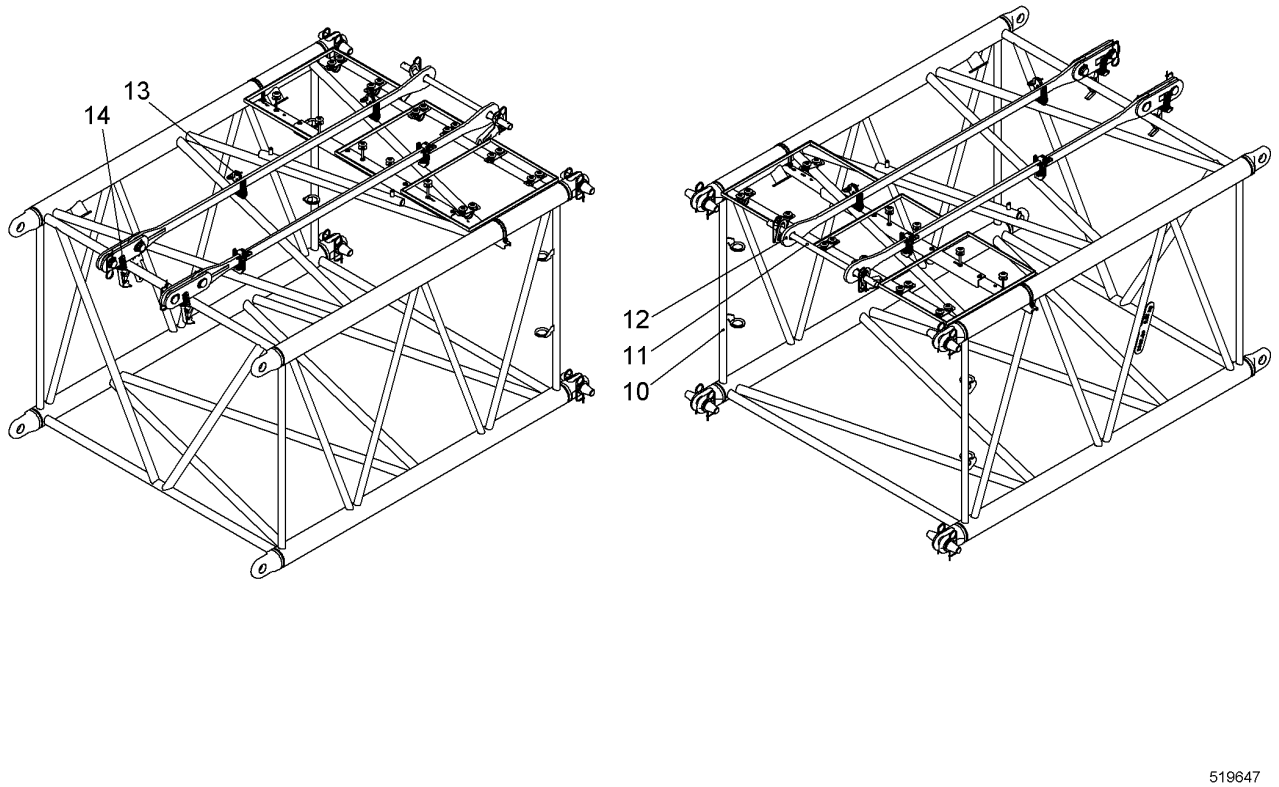

Pos.	Item	Quantity	Description	Bezeichnung	Serie	K
10	11240848	1	BOOM INTERMEDIATE SECTION CPL ⇨ ❑ 552	AL ZWISCHENSTUECK KPL		
11	11289827	1	TRANSPORT LASHING ⇨ ❑ 557	TRANSPORTSICHERUNG		
12	918591014	1	ANCHORING ROD CPL ⇨ ❑ 493	HALTESTANGE KPL		
13	11232907	4	SUPPORT CPL ⇨ ❑ 494	AUFLAGE KPL		
14	11232922	2	SUPPORT CPL ⇨ ❑ 495	AUFLAGE KPL		

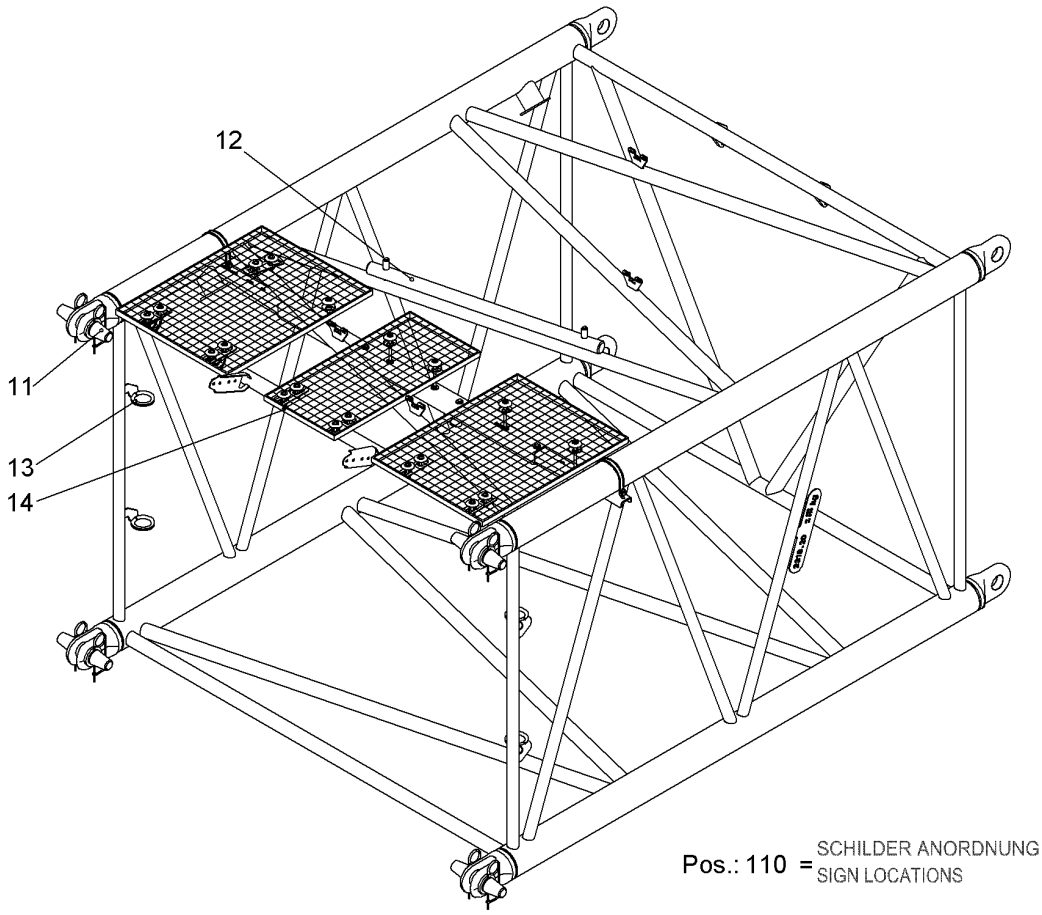

Pos.	Item	Quantity	Description	Bezeichnung	Serie	K
11	11288523	4	PIN CPL ⇨ ❑ 528	BOLZEN KPL		
12	11287255	1	ROPE GUARD CPL ⇨ ❑ 484	SEILSCHUTZ KPL		
13	262103101	0.93	FLEXIBLE EDGE PROTECTOR	KANTENSCHUTZ FLEXIBEL		
14	11289787	1	BOOM ACCESS ⇨ ❑ 553	AL BEGEHUNG		
110	11266901	1	SIGN LOCATIONS	SCHILDER ANORD		

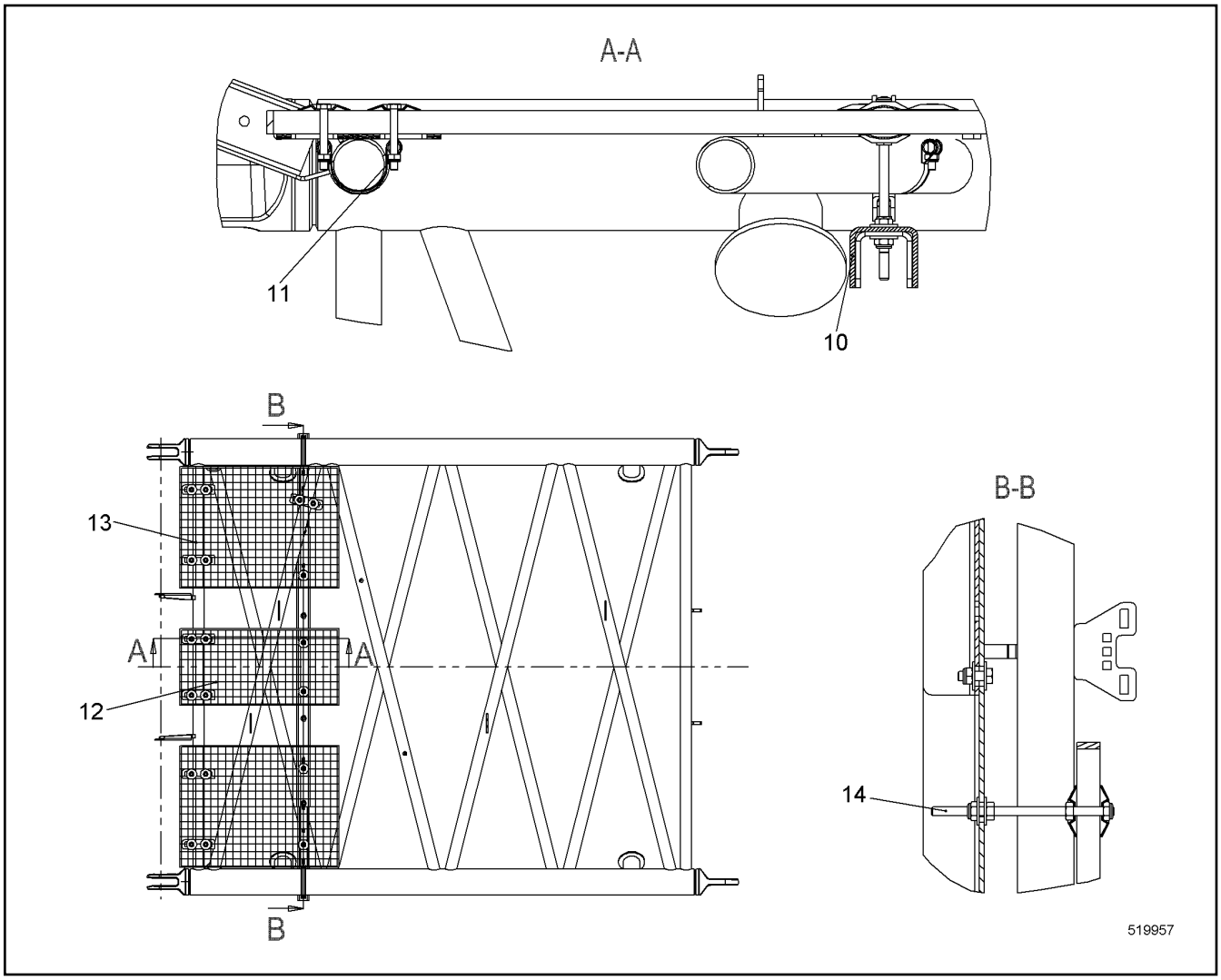

Pos.	Item	Quantity	Description	Bezeichnung	Serie	K
10	11289790	1	GRATING CARRIER ⇨ ❑ 554	GITTERROSTTRAEGER		
11	11286679	7	FIXING CLAMP ⇨ ❑ 555	BEFESTIGUNGSCHELLE		
12	11894307	1	GRATING	GITTERROST		
13	11894306	2	GRATING	GITTERROST		
14	11285443	5	SUPPORT SYSTEM CPL ⇨ ❑ 556	ABSTUETZUNG KPL		

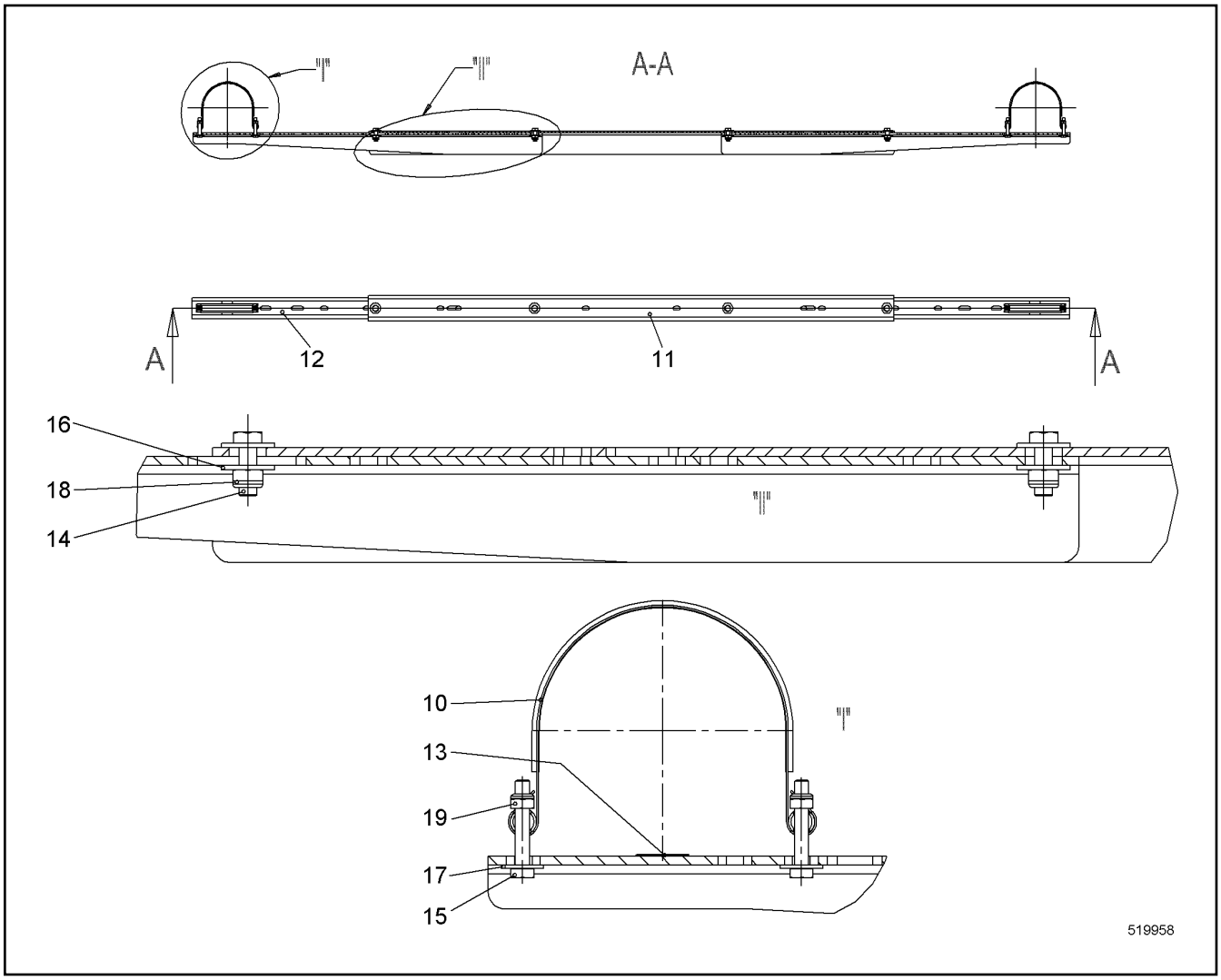

Pos.	Item	Quantity	Description	Bezeichnung	Serie	K
10	11271451	2	TIGHTENING STRAP HINGE PIN	GELENKBOLZENSPANNBAND		
11	11271973	1	PLATE	BLECH		
12	11271972	2	PLATE	BLECH		
13	289062814	0.1	RUBBER	GUMMI		
14	406511614	4	HEX SCREW ISO 4017 M10X30 A4-70	SECHSKANTSCHRAUBE		
15	10538807	4	HEX SCREW ISO 4017 M8X50 A4-70	SECHSKANTSCHRAUBE		
16	10540511	8	WASHER ISO 7093-1 10 A4	SCHEIBE		
17	10540510	4	WASHER ISO 7093-1 8 A4	SCHEIBE		
18	10540494	4	HEX NUT ISO 10511 M10 A4	SECHSKANTMUTTER		
19	10540493	4	HEX NUT ISO 10511 M8 A4	SECHSKANTMUTTER		

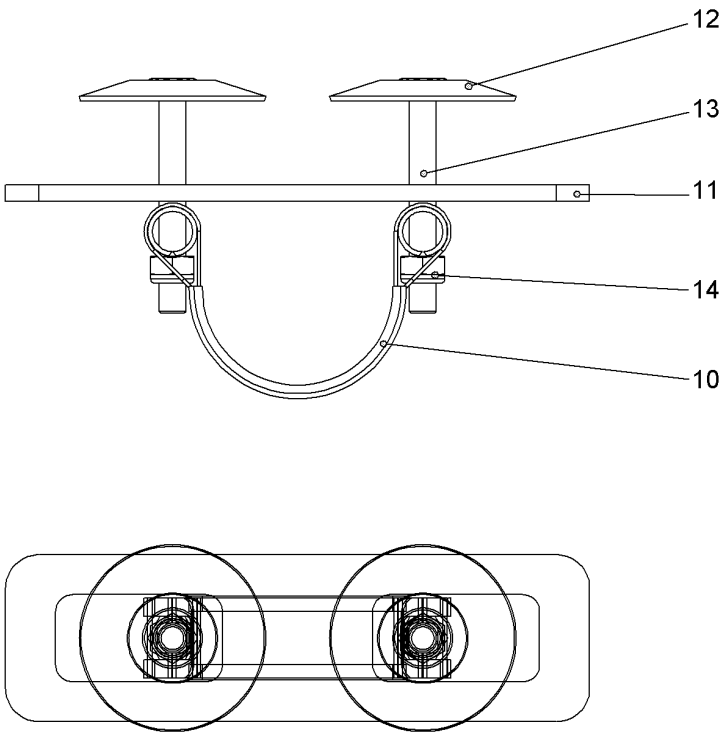

519582

Pos.	Item	Quantity	Description	Bezeichnung	Serie	K
10	10531889	1	TIGHTENING STRAP HINGE PIN	GELENKBOLZENSPANNBAND		
11	11285382	1	RUBBER	GUMMI		
12	10098157	2	DISH	TELLER		
13	10331507	2	HEX SCREW ISO 4017 M8X65 A4-70	SECHSKANTSCHRAUBE		
14	10540493	2	HEX NUT ISO 10511 M8 A4	SECHSKANTMUTTER		

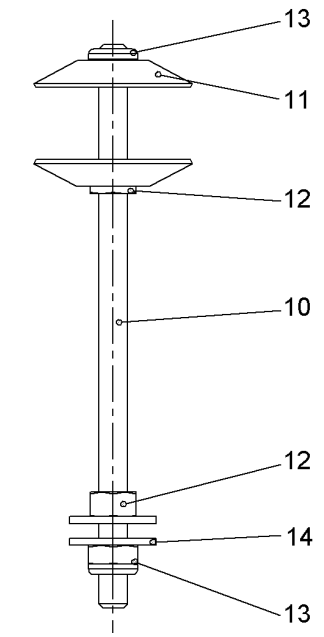

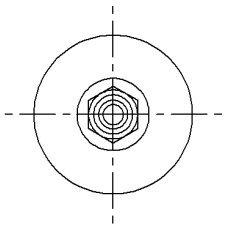

519156

Pos.	Item	Quantity	Description	Bezeichnung	Serie	K
10	11285441	1	THREADED ROD	GEWINDESTANGE		
11	10558629	2	DISH	TELLER		
12	411514614	2	HEX NUT ISO 4032 M10 A4-70	SECHSKANTMUTTER		
13	10540494	2	HEX NUT ISO 10511 M10 A4	SECHSKANTMUTTER		
14	10540511	2	WASHER ISO 7093-1 10 A4	SCHEIBE		

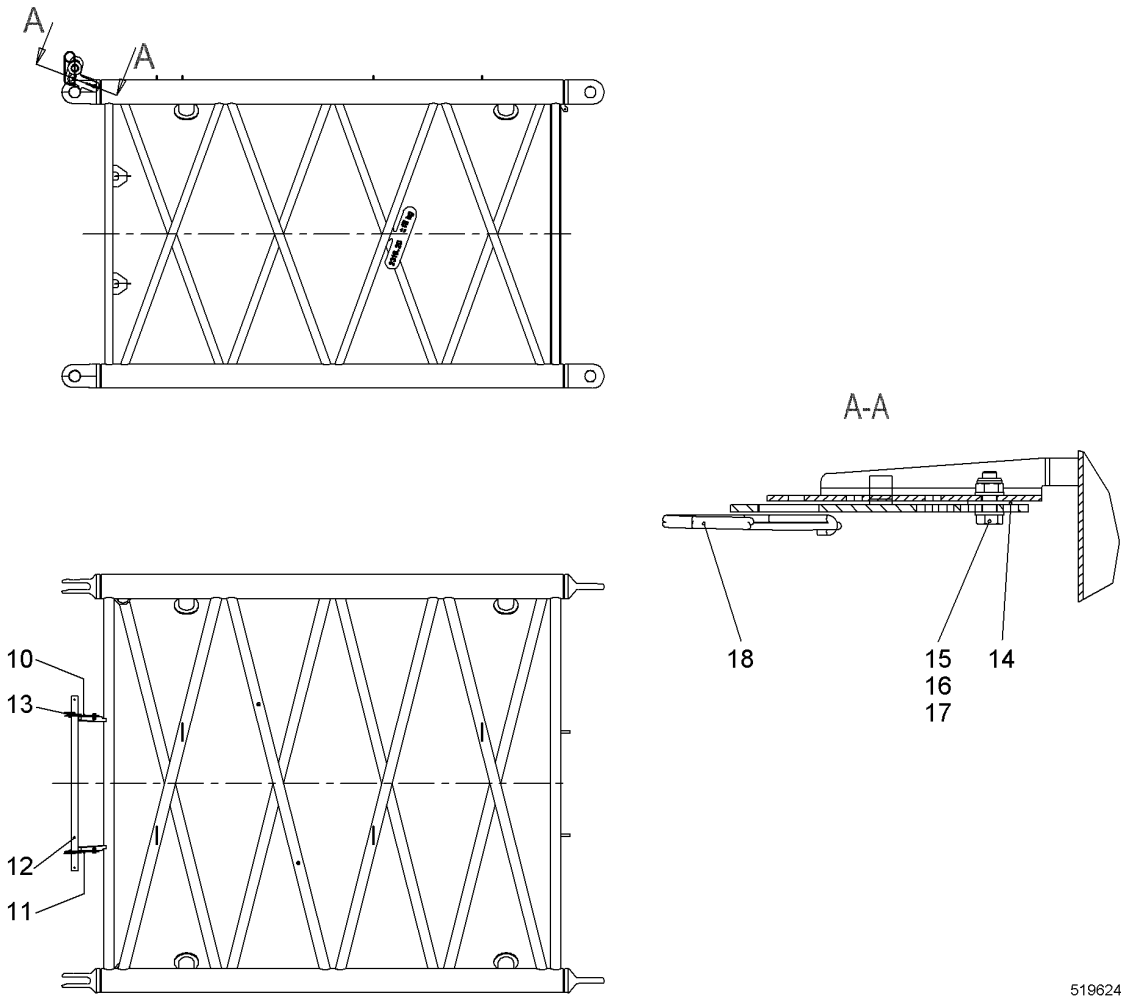

Pos.	Item	Quantity	Description	Bezeichnung	Serie	K
10	11241209	1	RETAINING PLATE	HALTEBLECH		
11	11236318	1	RETAINING PLATE	HALTEBLECH		
12	289052014	1	TUBE	ROHR		
13	420003714	2	WASHER ISO 7089 42	SCHEIBE		
14	485568514	2	WASHER DIN 34816 10.5 PA 6.6	SCHEIBE		
15	420001114	4	WASHER ISO 7089 10 A4	SCHEIBE		
16	406511614	2	HEX SCREW ISO 4017 M10X30 A4-70	SECHSKANTSCHRAUBE		
17	10540494	2	HEX NUT ISO 10511 M10 A4	SECHSKANTMUTTER		
18	433102508	2	RETAINING SPRING 5MM	SICHERUNGSFEDER		

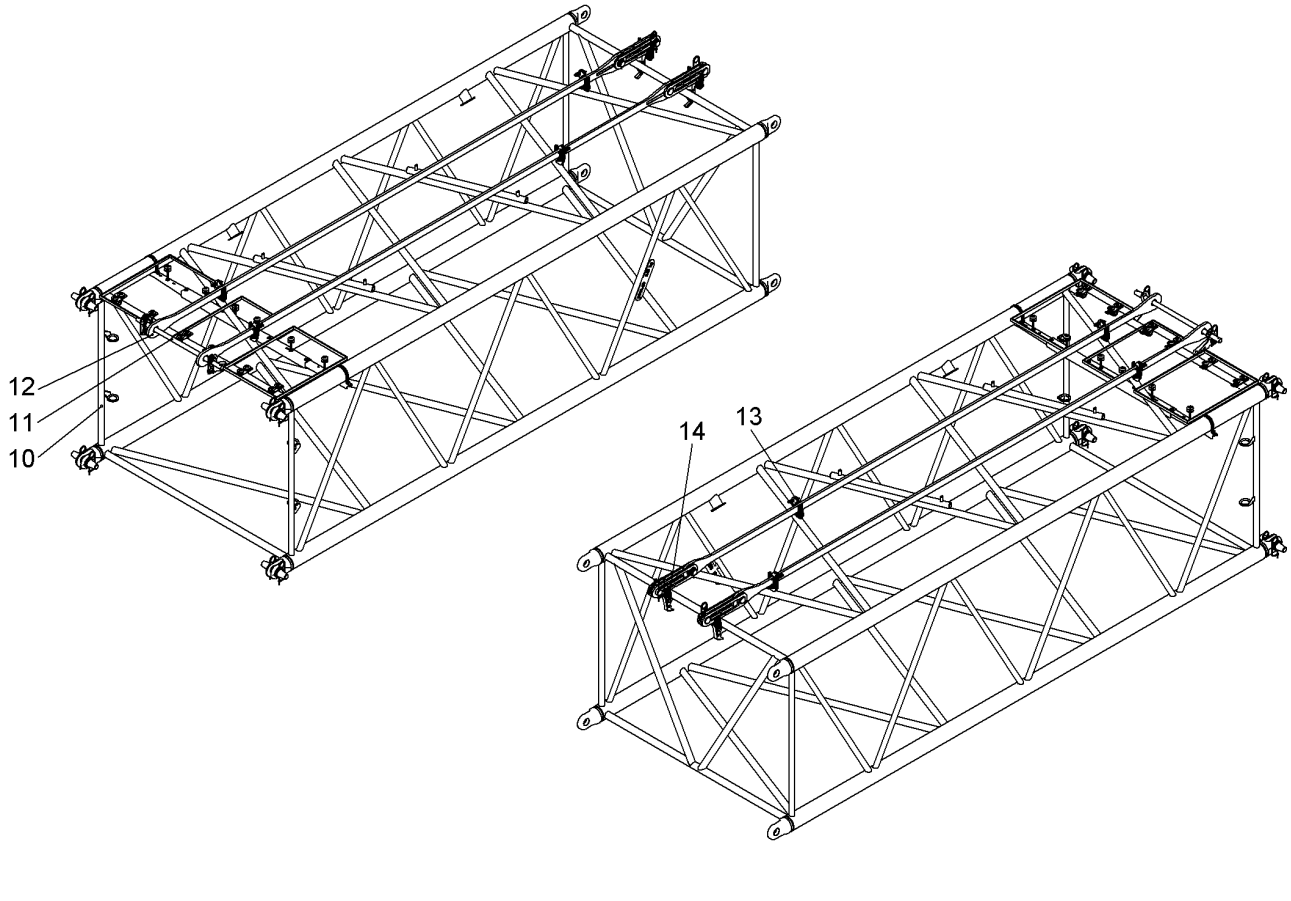

Pos.	Item	Quantity	Description	Bezeichnung	Serie	K
10	11241625	1	BOOM INTERMEDIATE SECTION CPL ⇨ ❑ 559	AL ZWISCHENSTUECK KPL		
11	11289827	1	TRANSPORT LASHING ⇨ ❑ 557	TRANSPORTSICHERUNG		
12	918591114	1	ANCHORING ROD CPL ⇨ ❑ 501	HALTESTANGE KPL		
13	11232907	4	SUPPORT CPL ⇨ ❑ 494	AUFLAGE KPL		
14	11232922	2	SUPPORT CPL ⇨ ❑ 495	AUFLAGE KPL		

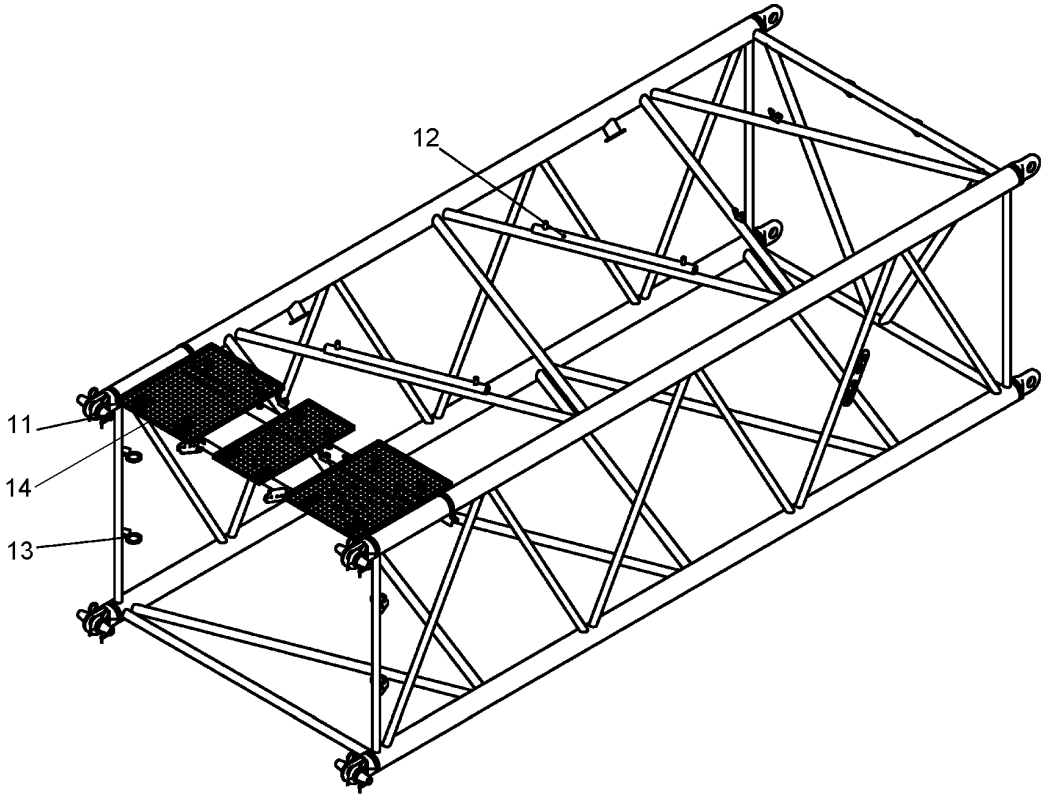

Pos.: 110 = SCHILDER ANORDNUNG / SIGN LOCATIONS

519942

Pos.	Item	Quantity	Description	Bezeichnung	Serie	K
11	11288523	4	PIN CPL ⇨ ❑ 528	BOLZEN KPL		
12	11287255	2	ROPE GUARD CPL ⇨ ❑ 484	SEILSCHUTZ KPL		
13	262103101	0.93	FLEXIBLE EDGE PROTECTOR	KANTENSCHUTZ FLEXIBEL		
14	11289792	1	BOOM ACCESS ⇨ ❑ 560	AL BEGEHUNG		
110	11266901	1	SIGN LOCATIONS	SCHILDER ANORD		

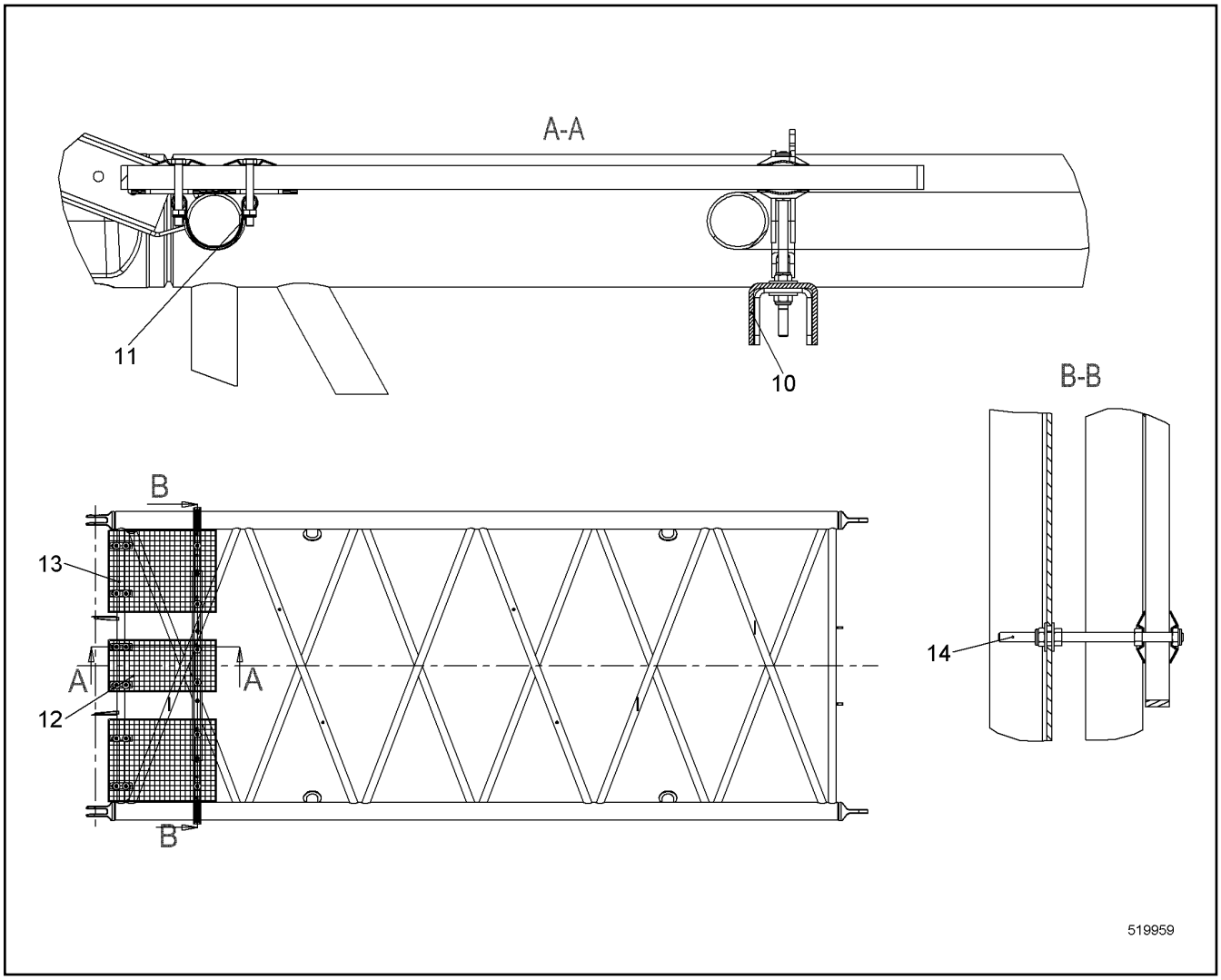

Pos.	Item	Quantity	Description	Bezeichnung	Serie	K
10	11289790	1	GRATING CARRIER ⇨ ❑ 554	GITTERROSTTRAEGER		
11	11286679	6	FIXING CLAMP ⇨ ❑ 555	BEFESTIGUNGSCHELLE		
12	11289788	1	GRATING	GITTERROST		
13	11289789	2	GRATING	GITTERROST		
14	11285443	6	SUPPORT SYSTEM CPL ⇨ ❑ 556	ABSTUETZUNG KPL		

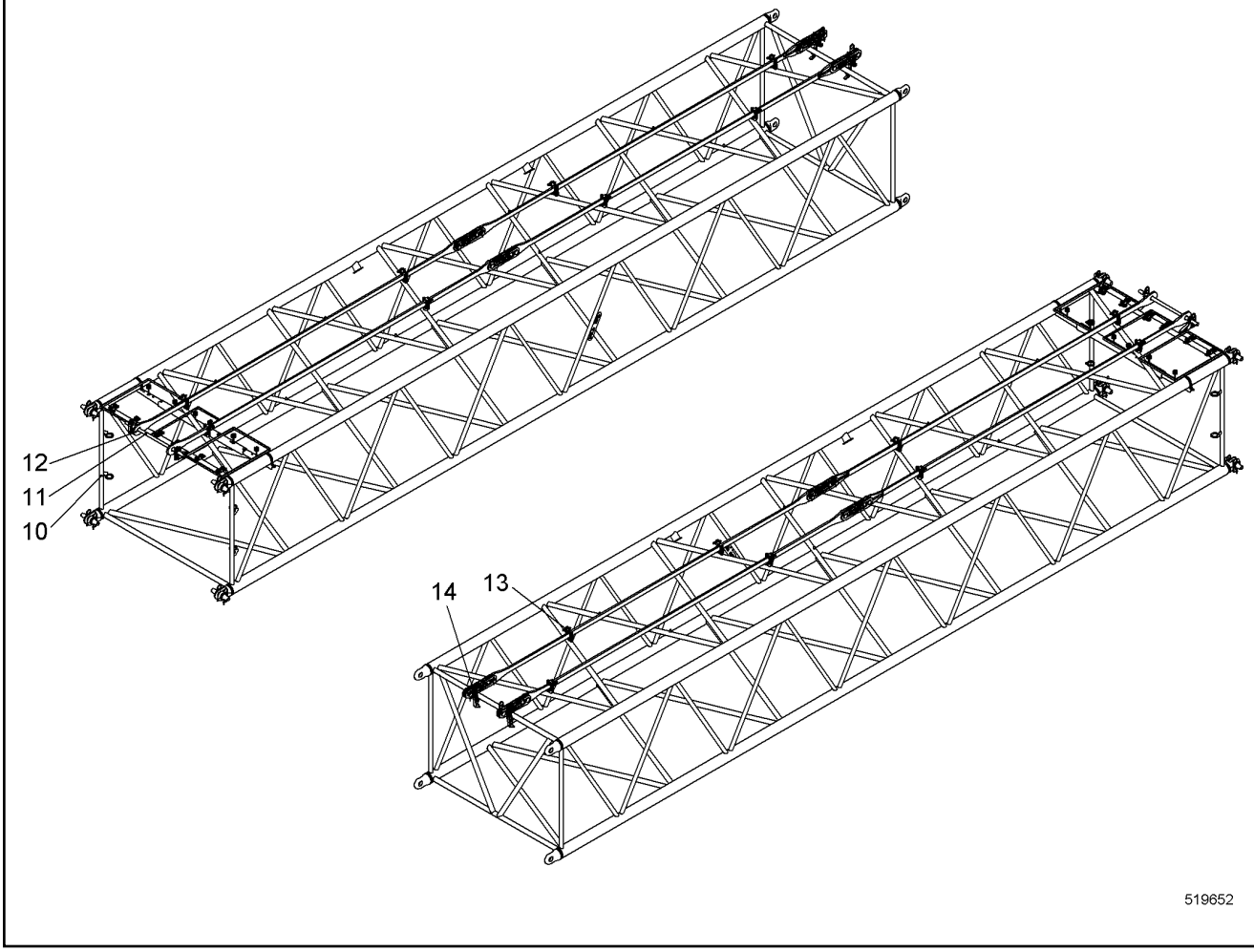

Pos.	Item	Quantity	Description	Bezeichnung	Serie	K
10	11241630	1	BOOM INTERMEDIATE SECTION CPL ⇨ ❑ 562	AL ZWISCHENSTUECK KPL		
11	11289827	1	TRANSPORT LASHING ⇨ ❑ 557	TRANSPORTSICHERUNG		
12	990360914	1	ANCHORING ROD CPL ⇨ ❑ 507	HALTESTANGE KPL		
13	11232907	8	SUPPORT CPL ⇨ ❑ 494	AUFLAGE KPL		
14	11232922	2	SUPPORT CPL ⇨ ❑ 495	AUFLAGE KPL		

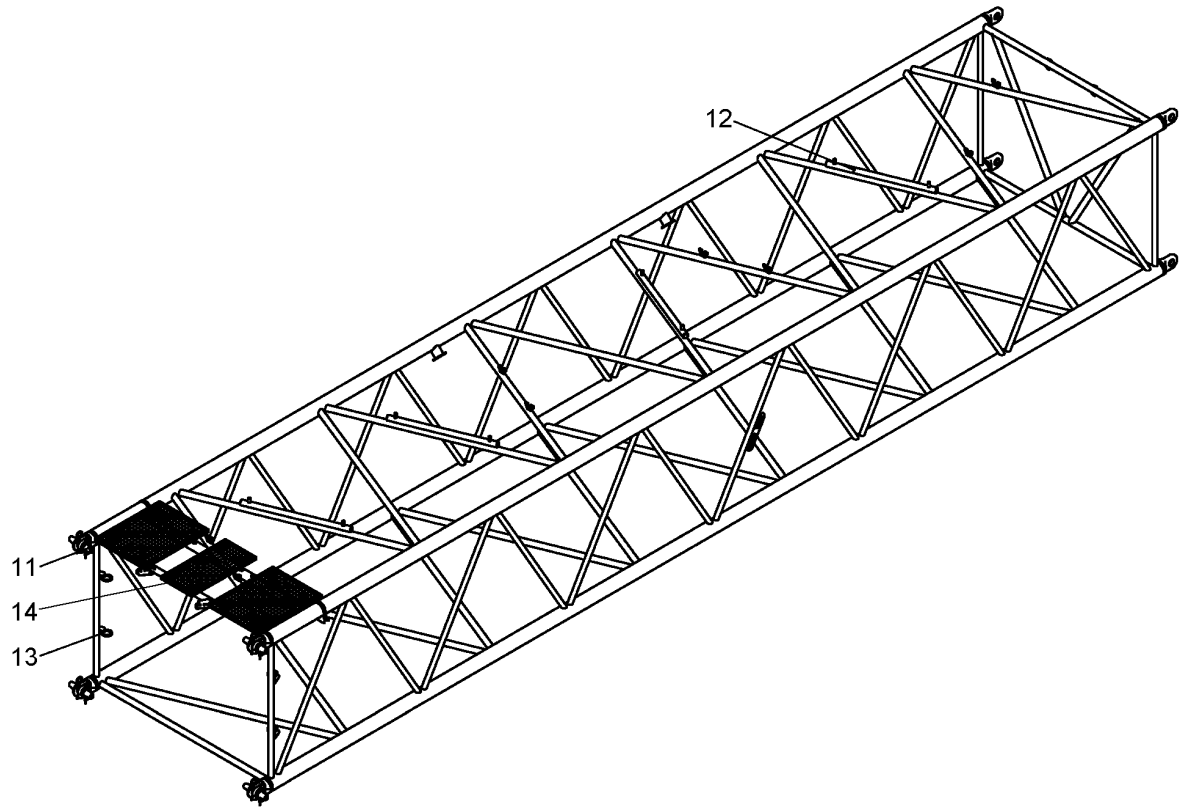

Pos.: 110 = SCHILDER ANORDNUNG / SIGN LOCATIONS

519943

Pos.	Item	Quantity	Description	Bezeichnung	Serie	K
11	11288523	4	PIN CPL ⇨ ❑ 528	BOLZEN KPL		
12	11287255	4	ROPE GUARD CPL ⇨ ❑ 484	SEILSCHUTZ KPL		
13	262103101	0.93	FLEXIBLE EDGE PROTECTOR	KANTENSCHUTZ FLEXIBEL		
14	11289792	1	BOOM ACCESS ⇨ ❑ 560	AL BEGEHUNG		
110	11266901	1	SIGN LOCATIONS	SCHILDER ANORD		

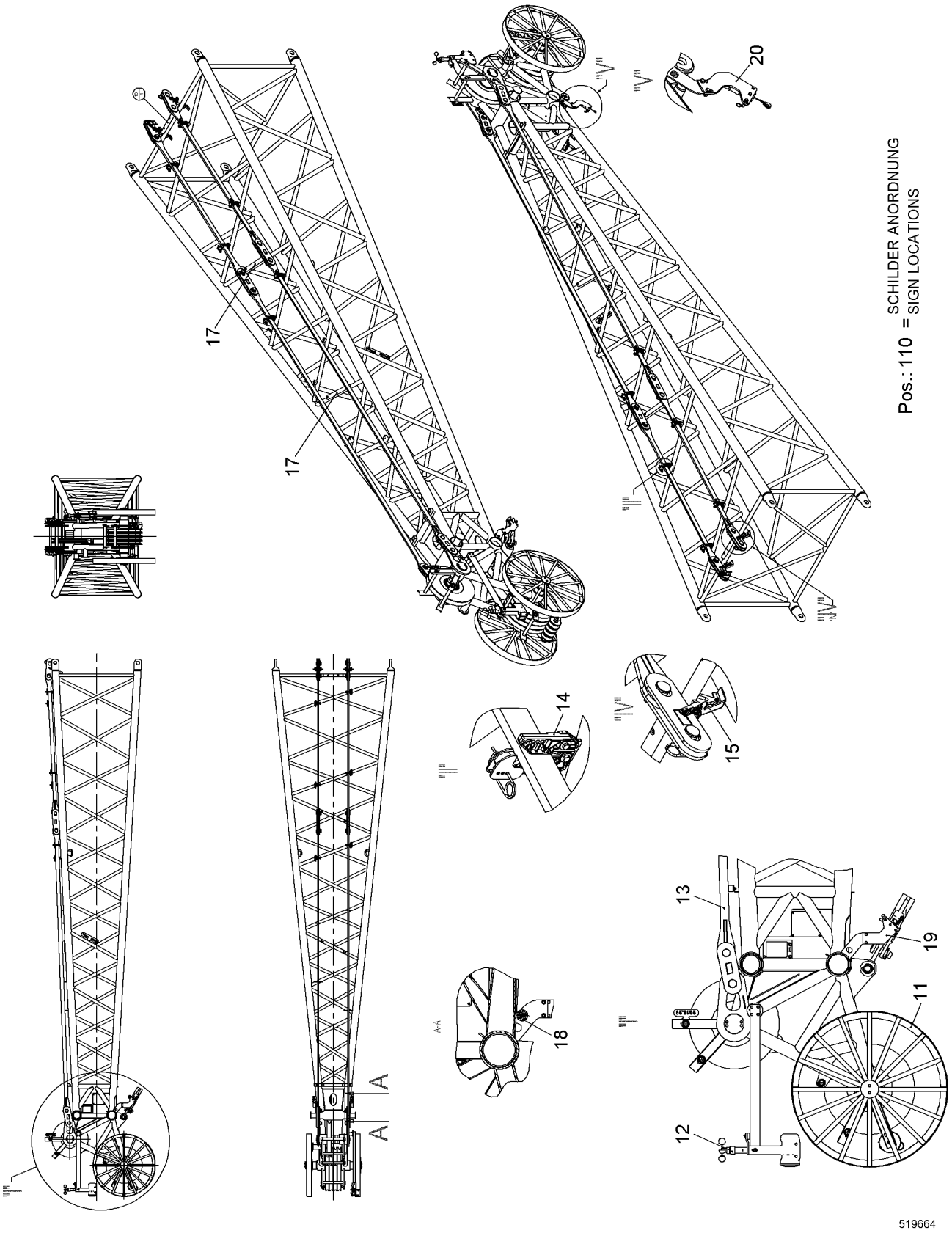
Pos.: 110 = SCHILDER ANORDNUNG
SIGN LOCATIONS
17
17
20
14
15
18
13
19
11
12
A
A
519664

Pos.	Item	Quantity	Description	Bezeichnung	Serie	K
3	10531410	1	HEAD WHIP HOIST EL ⇨ ❑ 565	KOPF WIPPSPITZE EL		
11	11287746	1	MOUNTING PARTS ⇨ ❑ 569	MONTAGETEILE		
12	990646114	1	ANEMOMETER CPL ⇨ ❑ 514	WINDMESSER KPL		
13	992636214	1	ANCHORING ROD CPL ⇨ ❑ 571	HALTESTANGE KPL		
14	11232907	6	SUPPORT CPL ⇨ ❑ 494	AUFLAGE KPL		
15	11232922	2	SUPPORT CPL ⇨ ❑ 495	AUFLAGE KPL		
16	11294517	1	ROPE GUARD CPL ⇨ ❑ 530	SEILSCHUTZ KPL		
17	11294573	2	ROPE GUARD CPL ⇨ ❑ 572	SEILSCHUTZ KPL		
18	11294626	1	ROPE GUARD CPL ⇨ ❑ 573	SEILSCHUTZ KPL		
19	10557537	1	HOIST LIMITSWITCH LEFT INSTAL. ⇨ ❑ 574	SPITZENENDSCHALTER LI EINBA		
20	10557576	1	HOIST LIMITSWITCH RIGHT INSTAL ⇨ ❑ 575	SPITZENENDSCHALTER RE EIN		
110	11269727	1	SIGN LOCATIONS	SCHILDER ANORD		

OHNE BILD
WITHOUT ILLUSTRATION
SANS PLANCHE
SIN FIG.
SEM ILUSTRAÇÃO
БЕЗ ИЗОБРАЖЕНИЯ

600000

Pos.	Item	Quantity	Description	Bezeichnung	Serie	K
10	11286324	1	ANGLE TRANSMITTER	WINKELGEBER		
21	10576245	1	CABLE LOOM ⇨ ❑ 566	KABELSATZ		

OHNE BILD
WITHOUT ILLUSTRATION
SANS PLANCHE
SIN FIG.
SEM ILUSTRAÇÃO
БЕЗ ИЗОБРАЖЕНИЯ

600000

Pos.	Item	Quantity	Description	Bezeichnung	Serie	K
20	10576251	1	CLAMPING SOCKET	KLEMMDOSE		
21	10045155	5	CABLE GLAND	KABELVERSCHRAUBUNG		
24	693061414	1	STOPPER PLUG	BLINDSTOPFEN		
25	693061314	4	STOPPER PLUG	BLINDSTOPFEN		
26	693061214	4	STOPPER PLUG	BLINDSTOPFEN		
27	606644414	1	SIGN	SCHILD		
30	927521808	2	LIMIT SWITCH HOISTING ABOVE ⇨ ❑ 567	ENDSCHALTER HUB OBEN		
40	993856014	1	CABLE ⇨ ❑ 568	KABEL		
41	918361414	1	CABLE ANEMOMETER	KABEL WINDGEBER		
50	693155014	1	SOCKET SHELL	TUELLENGEHAEUSE		
51	605604714	1	MALE INSERT	STIFTEINSATZ		
52	693061414	1	STOPPER PLUG	BLINDSTOPFEN		
53	605619814	6	PIN CONTACT	STIFTKONTAKT		
80	693157014	2	BS HOUSING	SOCKELGEHAEUSE		
81	605616114	2	FEMALE INSERT	BUCHSENEINSATZ		
82	605618014	2	COVER LID	ABDECKKAPPE		
83	693152314	2	HOSE CLAMP THREADED UNION	SCHLAUCHSCHELLENVERSCH		
84	602620201	2	REDUCER	REDUZIERUNG		
85	600454314	4.5	CONTROL LEAD	STEUERLEITUNG		
86	603000308	1.2	INSULATING HOSE	ISOLIERSCHLAUCH		

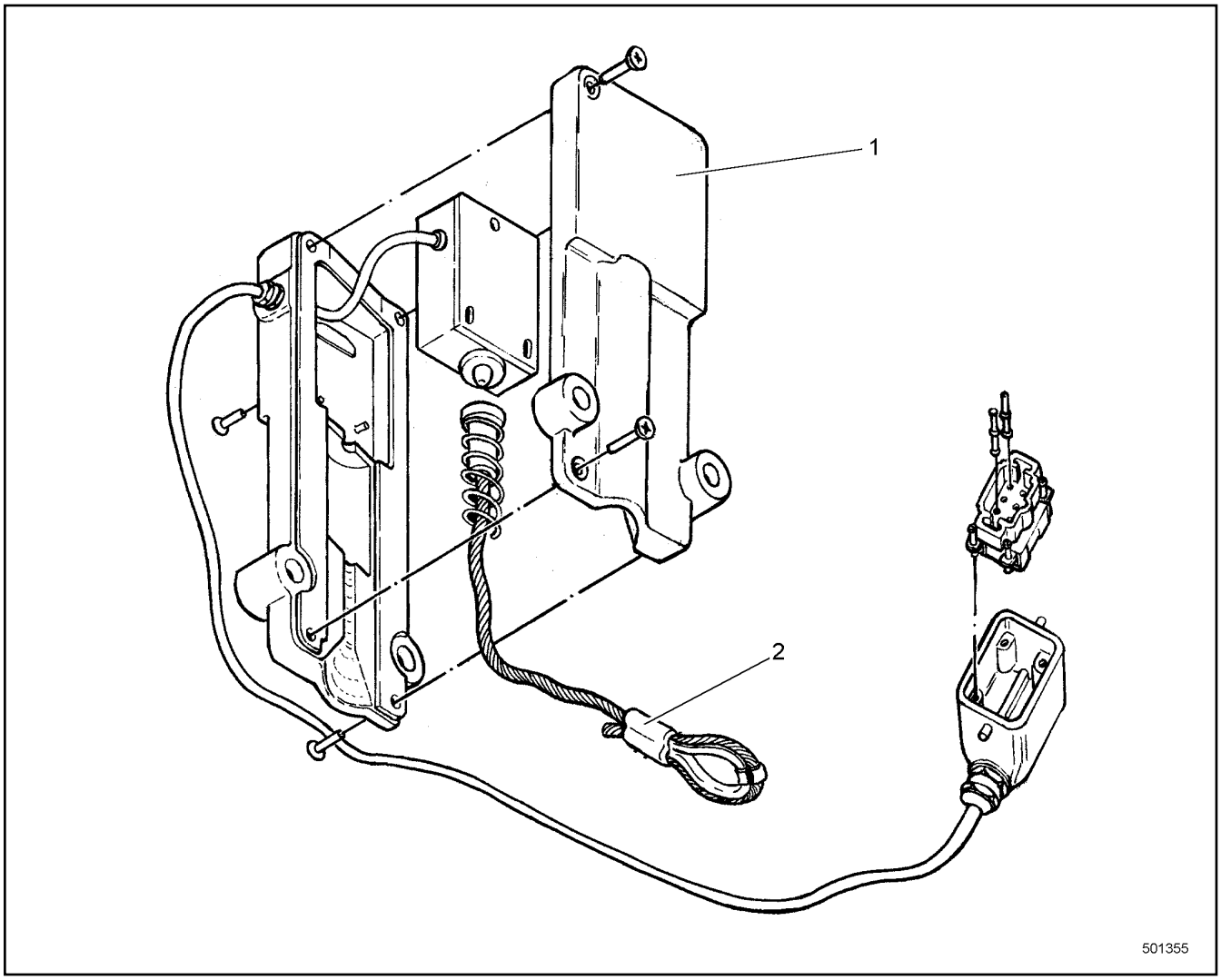

Pos.	Item	Quantity	Description	Bezeichnung	Serie	K
1	606655208	1	CIRCUIT ELEMENT CPL	SCHALTELEMENT KPL		
2	606655308	1	AUXILIARY ROPE	HILFSSEIL		

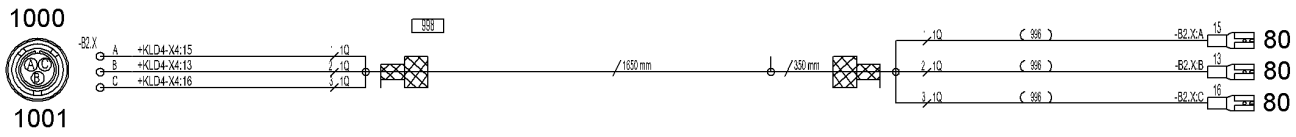

515332

Pos.	Item	Quantity	Description	Bezeichnung	Serie	K
80	602209314	3	RECEPTACLE	STECKHUELSE		
1000	605260114	1	PLUG	STECKER		
1001	6203401	1	DUST CAP	STAUBKAPPE		
1002	600454314	2	CONTROL LEAD	STEUERLEITUNG		

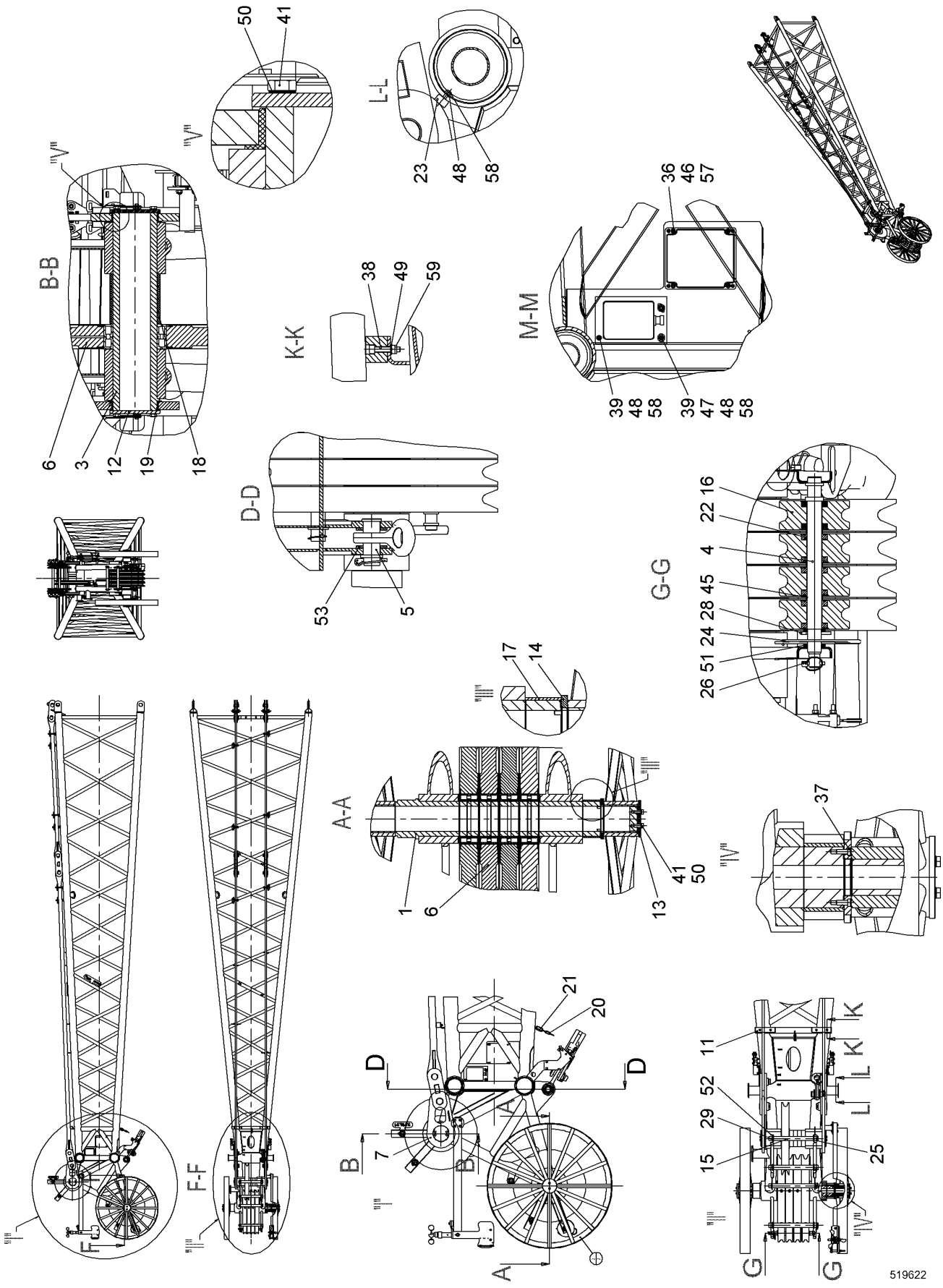
B-B
K-K
L-L
M-M
D-D
G-G
A-A
F-F
519622

Pos.	Item	Quantity	Description	Bezeichnung	Serie	K
1	992387314	1	BOLT ST.CONST.	BOLZEN SCHWK		
2	385260014	2	WHEEL ST.CONST.	RAD SCHWK		
3	959483514	1	PIN	BOLZEN		
4	11215962	1	PIN	BOLZEN		
5	910362714	1	BOLT CONNECTION	BOLZENVERBINDUNG		
6	790202014	5	ROPE PULLEY CPL	SEILROLLE KPL		
7	959476014	2	BUTT STRAP	LASCHE		
11	967559503	2	STRIP	LEISTE		
12	949940914	2	COVER	DECKEL		
13	949944514	2	COVER	DECKEL		
14	949943614	1	COVER	DECKEL		
15	10098601	4	TUBE	ROHR		
16	970961303	4	ROLLER	ROLLE		
17	956627714	1	BUSHING 140/150X72 S355J2H;EN 10210-1	BUCHSE		
18	10349289	4	BUSHING RD160/140.5X40 POM	BUCHSE		
19	959476114	2	BUSHING 150/140X27 KUNSTSTOFF	BUCHSE		
20	740000208	1	CHAIN	KETTE		
21	773947708	2	CHAIN LOCK	KETTENSCHLOSS		
22	745120514	8	DEEP GROOVE BALL BEARING	RILLENKUGELLAGER		
23	726616208	2	RUBBER MOUNT	LAGER GUMMI		
24	433102508	1	RETAINING SPRING 5MM	SICHERUNGSFEDER		
25	10098106	4	SAFETY PLUG W HINGE-LID 10X55	SICHERHEITSKLAPPSTECKER		
26	432016214	1	SAFETY PLUG W HINGE-LID 8X42	SICHERHEITSKLAPPSTECKER		
28	433007914	1	SPLIT PIN ISO 1234 6.3X56 A4	SPLINT		
29	433008108	4	SPLIT PIN ISO 1234 6.3X63	SPLINT		
36	404251014	4	SOCKET HEAD SCREW ISO 4762 M6X35 A4-7	ZYLINDERSCHRAUBE		
37	407201308	4	SOCKET HEAD SCREW DIN 6912 M8X20 8.8	ZYLINDERSCHRAUBE		
38	485558914	4	SOCKET HEAD SCREW ISO 4762 M10X50 A4-7	ZYLINDERSCHRAUBE		
39	406501314	3	HEX SCREW ISO 4017 M8X30 A4-70	SECHSKANTSCHRAUBE		
41	406517314	12	HEX SCREW ISO 4017 M12X30 A4-70	SECHSKANTSCHRAUBE		
45	956858014	3	WASHER 36X40X12 S355J2H;EN 10210-1	SCHEIBE		
46	420000414	4	WASHER ISO 7089 6 A4	SCHEIBE		
47	10540510	2	WASHER ISO 7093-1 8 A4	SCHEIBE		
48	420001014	6	WASHER ISO 7089 8 A4	SCHEIBE		
49	420001114	4	WASHER ISO 7089 10 A4	SCHEIBE		
50	10536581	12	LOCK WASHER 12 254 SMO;EN 10088-3	SICHERUNGSSCHEIBE		
51	421102814	2	WASHER DIN EN 28738 35 ST;	SCHEIBE		
52	421103214	8	WASHER DIN EN 28738 45 ST;	SCHEIBE		
53	420004001	2	WASHER ISO 7089 48	SCHEIBE		
57	10540492	4	HEX NUT ISO 10511 M6 A4	SECHSKANTMUTTER		
58	10540493	5	HEX NUT ISO 10511 M8 A4	SECHSKANTMUTTER		
59	10540494	4	HEX NUT ISO 10511 M10 A4	SECHSKANTMUTTER		

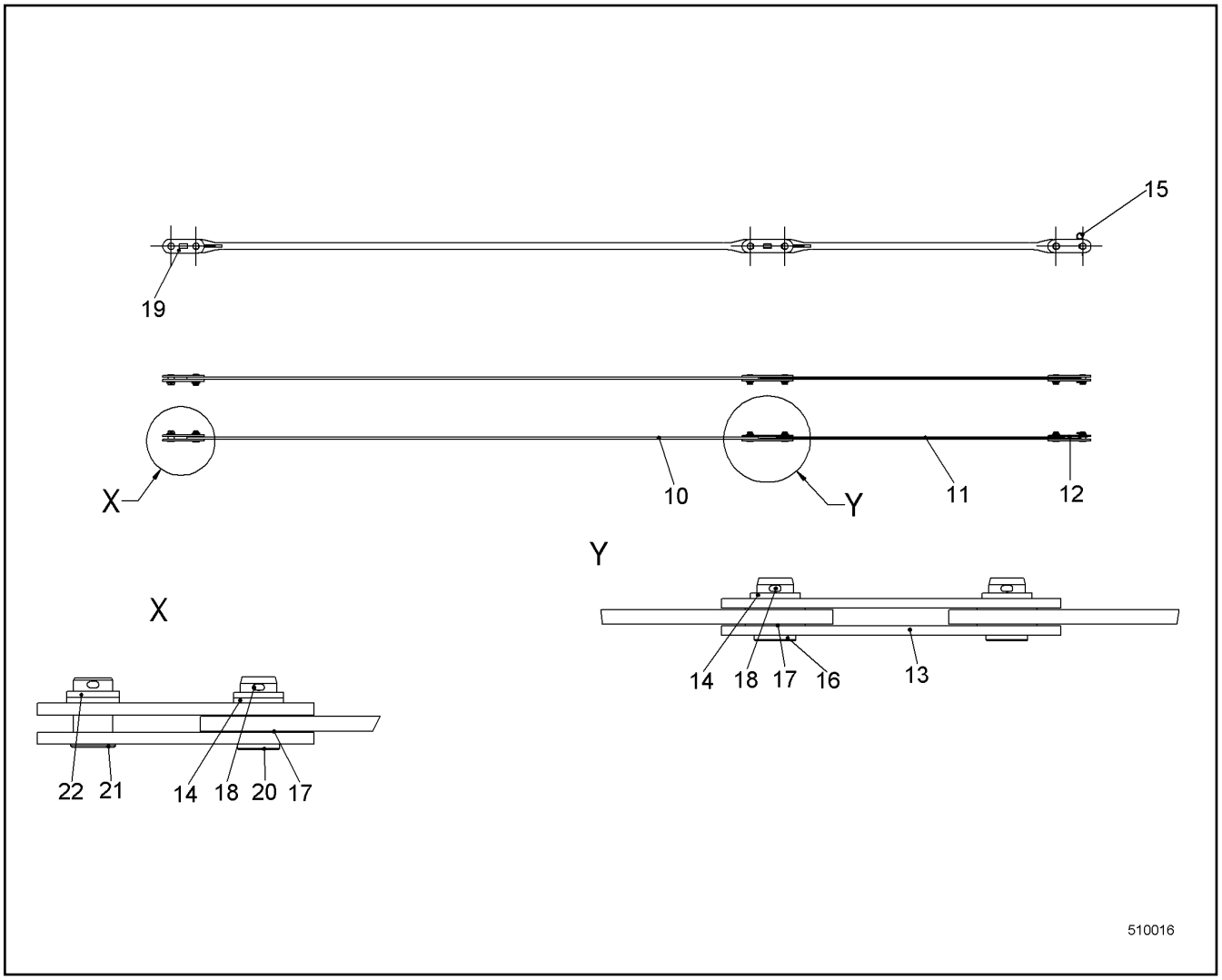

Pos.	Item	Quantity	Description	Bezeichnung	Serie	K
10	949910614	2	ANCHORING ROD	HALTESTANGE		
11	949910714	2	ANCHORING ROD	HALTESTANGE		
12	949911014	4	COUPLING LINK	KOPPELLASCHE		
13	950275414	4	COUPLING LINK	KOPPELLASCHE		
14	421103414	12	WASHER DIN EN 28738 55 ST;	SCHEIBE		
15	433105008	2	RETAINING SPRING DIN 2194 6MM FS	SICHERUNGSFEDER		
16	949196614	8	PIN 63X95 LHRD900-40;10019758	BOLZEN		
17	949942814	20	WASHER 58/90X2 GUMMI NBR/SBR-65 GRD	SCHEIBE		
18	433010314	10	SPLIT PIN ISO 1234 10X80 A4	SPLINT		
19	958281314	4	COUPLING LINK	KOPPELLASCHE		
20	949982414	2	PIN 63X110 LHRD900-40;10019758	BOLZEN		
21	942976214	2	PIN 68X105 LHRD900-40;10019758	BOLZEN		
22	421103514	4	WASHER DIN EN 28738 60 ST;	SCHEIBE		

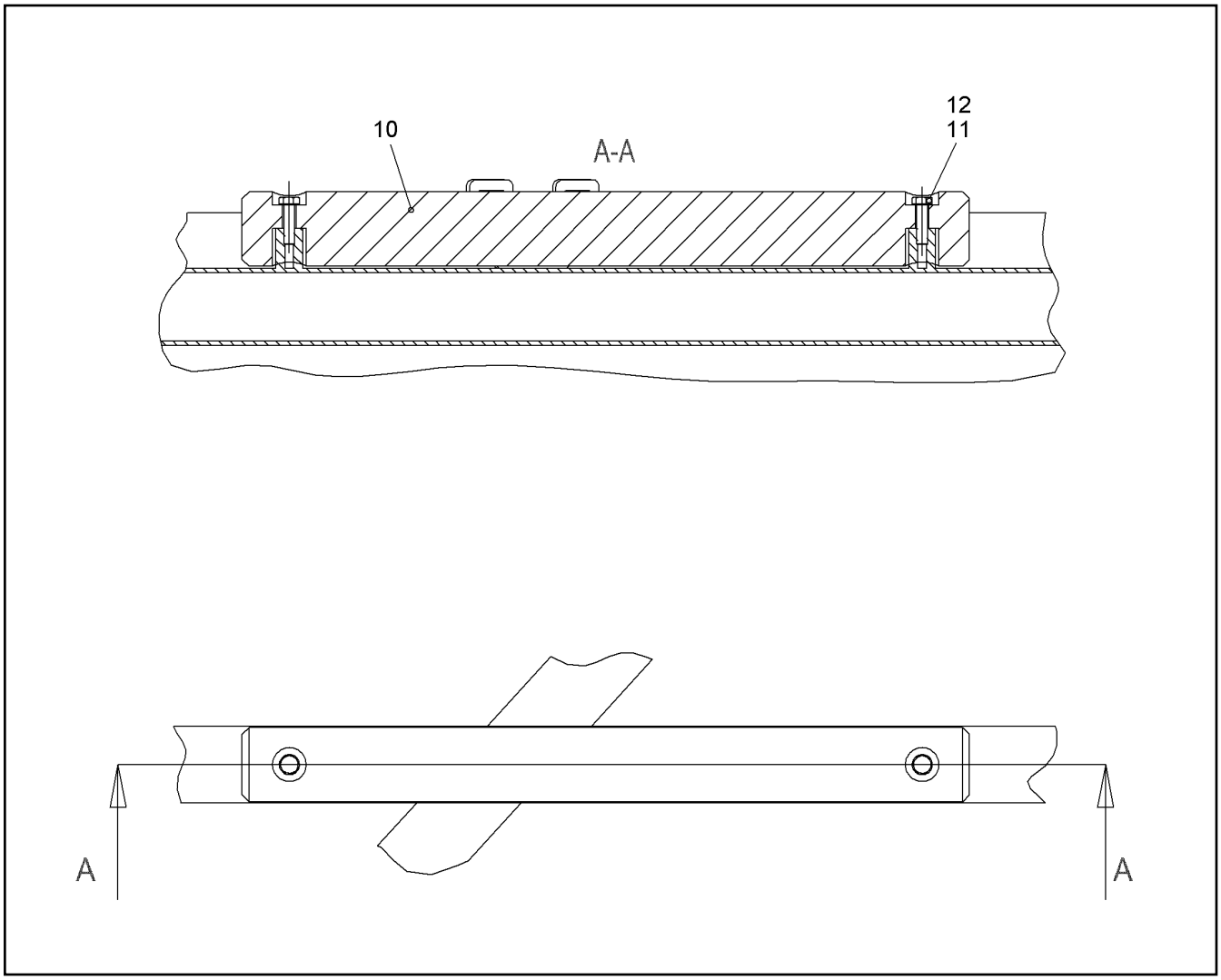

Pos.	Item	Quantity	Description	Bezeichnung	Serie	K
10	289003214	1	STRIP	LEISTE		
11	406501314	2	HEX SCREW ISO 4017 M8X30 A4-70	SECHSKANTSCHRAUBE		
12	10447017	2	LOCKING RING 8	SICHERUNGSRING		

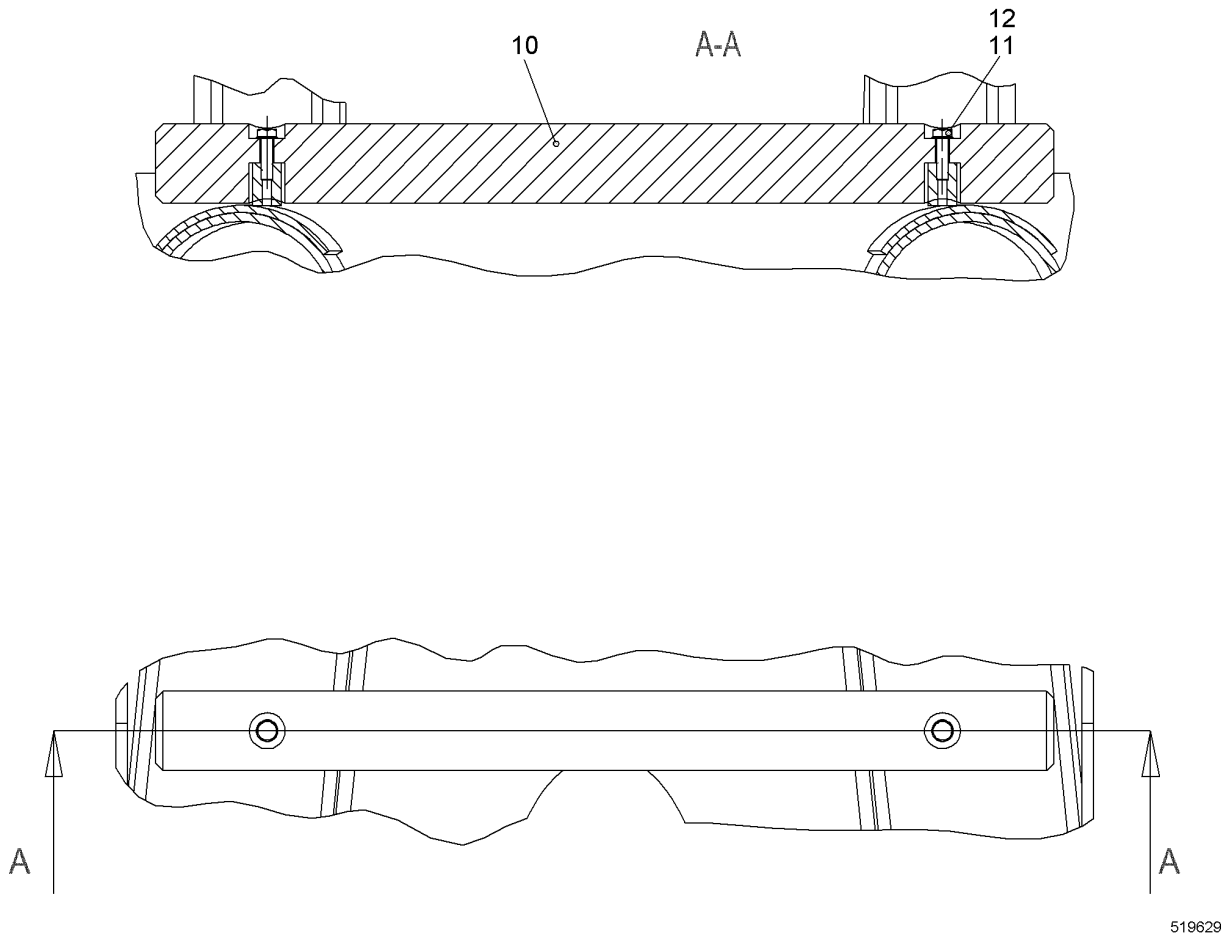

Pos.	Item	Quantity	Description	Bezeichnung	Serie	K
10	289016714	1	STRIP	LEISTE		
11	406501314	2	HEX SCREW ISO 4017 M8X30 A4-70	SECHSKANTSCHRAUBE		
12	10447017	2	LOCKING RING 8	SICHERUNGSRING		

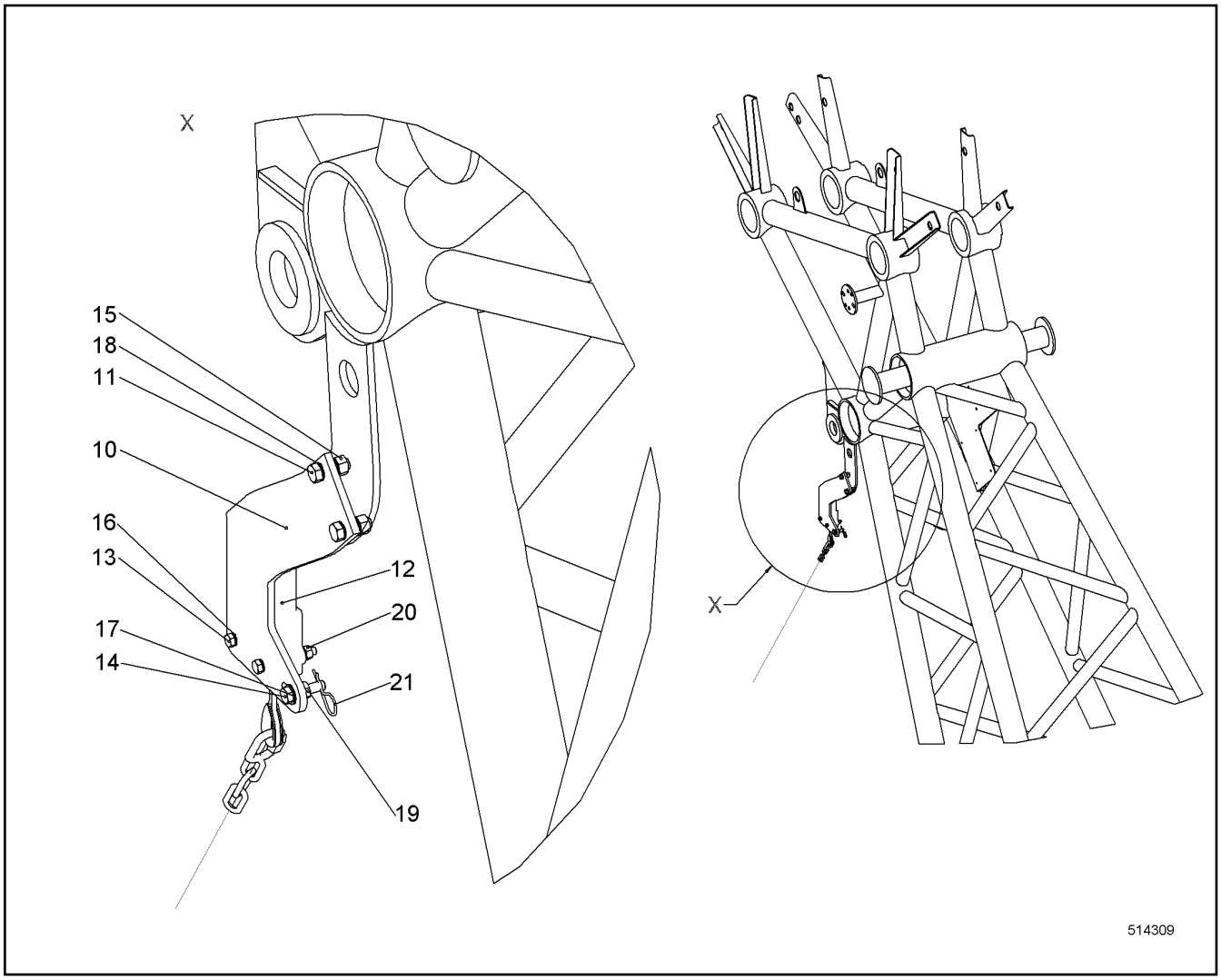

Pos.	Item	Quantity	Description	Bezeichnung	Serie	K
10	971508203	1	WP	WP		
11	406518414	2	HEX SCREW ISO 4017 M12X35 A4-70	SECHSKANTSCHRAUBE		
13	10331507	2	HEX SCREW ISO 4017 M8X65 A4-70	SECHSKANTSCHRAUBE		
14	10539971	1	HEX SCREW ISO 4017 M10X40 A4-70	SECHSKANTSCHRAUBE		
15	411516914	2	HEX NUT ISO 4032 M12 A4-70	SECHSKANTMUTTER		
16	10536577	4	LOCK WASHER 8 254 SMO;EN 10088-3	SICHERUNGSSCHEIBE		
17	10536580	2	LOCK WASHER 10 254 SMO;EN 10088-3	SICHERUNGSSCHEIBE		
18	10536581	4	LOCK WASHER 12 254 SMO;EN 10088-3	SICHERUNGSSCHEIBE		
19	411514614	1	HEX NUT ISO 4032 M10 A4-70	SECHSKANTMUTTER		
20	411515014	2	HEX NUT ISO 4032 M8 A4-70	SECHSKANTMUTTER		
21	433206014	1	SPRING PLUG DIN 11024 2.5	FEDERSTECKER		

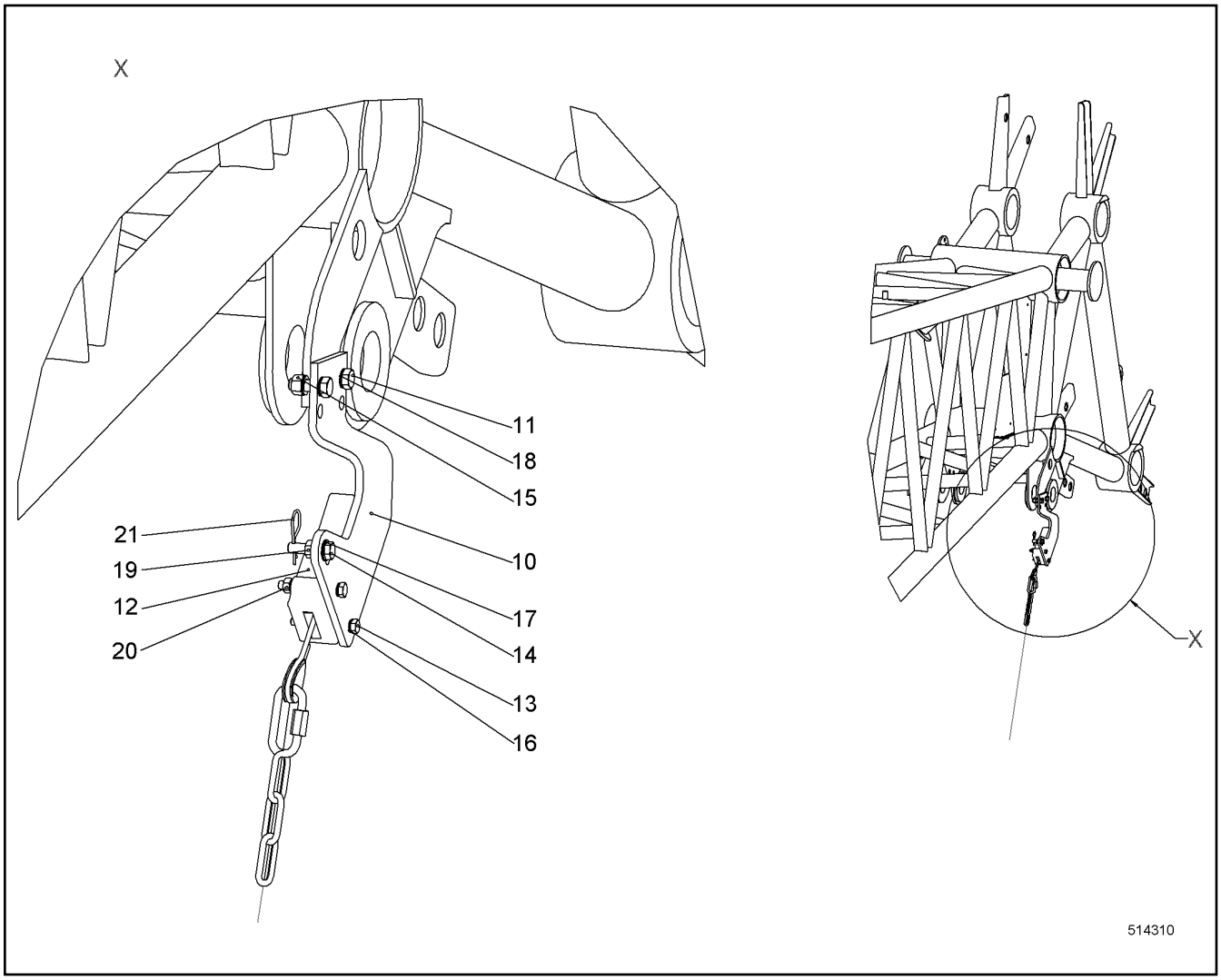

Pos.	Item	Quantity	Description	Bezeichnung	Serie	K
10	971511703	1	WP	WP		
11	406518414	2	HEX SCREW ISO 4017 M12X35 A4-70	SECHSKANTSCHRAUBE		
13	10331507	2	HEX SCREW ISO 4017 M8X65 A4-70	SECHSKANTSCHRAUBE		
14	10539971	1	HEX SCREW ISO 4017 M10X40 A4-70	SECHSKANTSCHRAUBE		
15	411516914	2	HEX NUT ISO 4032 M12 A4-70	SECHSKANTMUTTER		
16	10536577	4	LOCK WASHER 8 254 SMO;EN 10088-3	SICHERUNGSSCHEIBE		
17	10536580	2	LOCK WASHER 10 254 SMO;EN 10088-3	SICHERUNGSSCHEIBE		
18	10536581	4	LOCK WASHER 12 254 SMO;EN 10088-3	SICHERUNGSSCHEIBE		
19	411514614	1	HEX NUT ISO 4032 M10 A4-70	SECHSKANTMUTTER		
20	411515014	2	HEX NUT ISO 4032 M8 A4-70	SECHSKANTMUTTER		
21	433206014	1	SPRING PLUG DIN 11024 2.5	FEDERSTECKER		

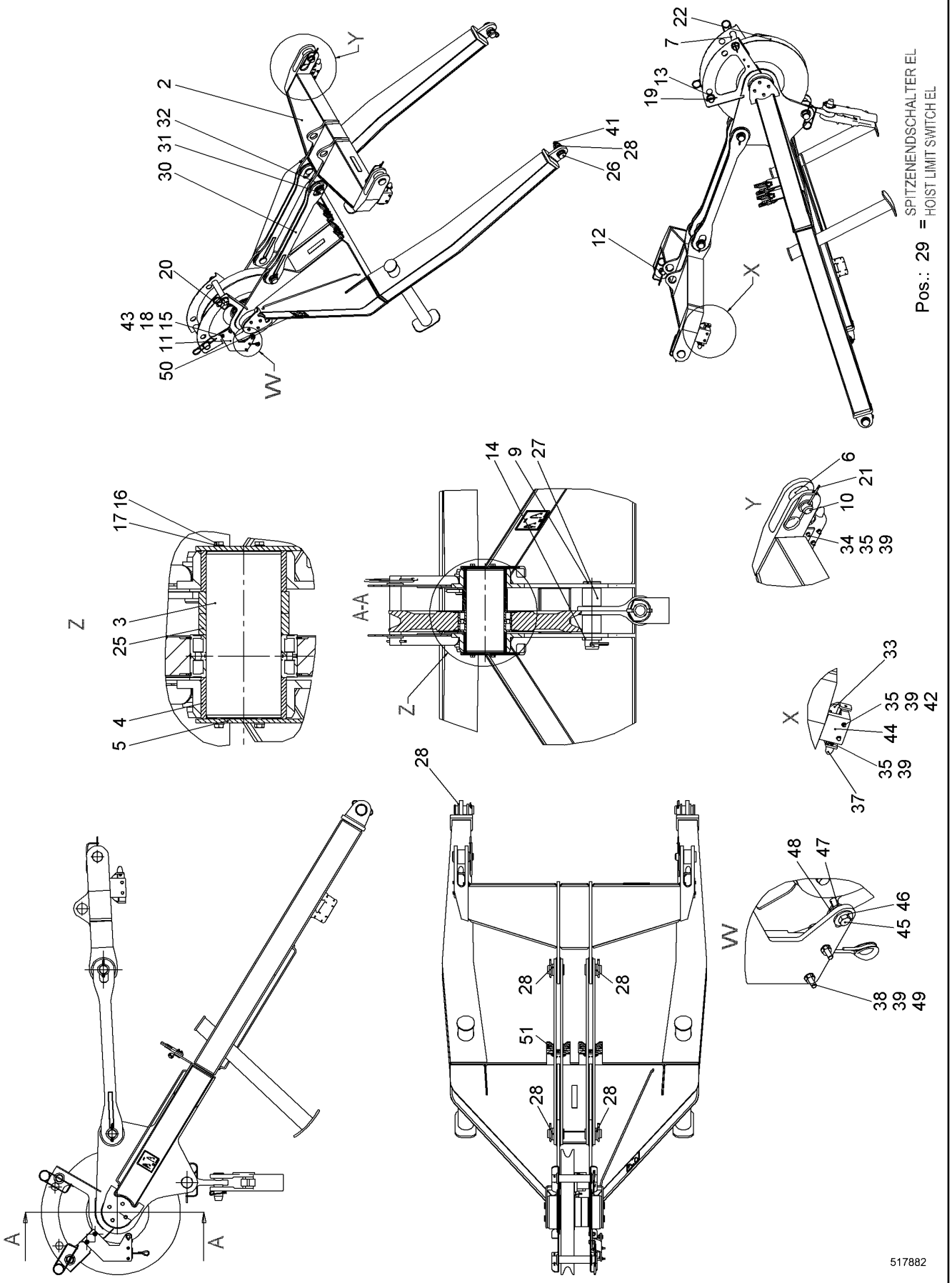

8.7.2015 517882	**138281_ETK_001**	576 (1/2)
LIEBHERR	**TIP BOOM CPL** **SPITZEN AL KPL**	**99 48 521 14**

Pos.	Item	Quantity	Description	Bezeichnung	Serie	K
1	994852014	1	TIP BOOM ST.CONST.	SPITZEN AL SCHWK		
2	919075014	1	TRAVERSE	TRAVERSE		
3	956067614	1	PIN	BOLZEN		
4	956070514	2	BUSHING 140/160X77 LHR355-20;10019728	BUCHSE		
5	956067414	2	WP	WP		
6	956070614	2	BUSHING	BUCHSE		
7	956064714	2	TUBE	ROHR		
9	956070214	1	PIN	BOLZEN		
10	942804914	2	PIN 60X120 LHRD900-40;10019758	BOLZEN		
11	971508203	1	WP	WP		
12	421103014	2	WASHER DIN EN 28738 40 ST	SCHEIBE		
13	421103214	4	WASHER DIN EN 28738 45 ST;	SCHEIBE		
14	421103414	1	WASHER DIN EN 28738 55 ST;	SCHEIBE		
15	406517314	2	HEX SCREW ISO 4017 M12X30 A4-70	SECHSKANTSCHRAUBE		
16	406518714	8	HEX SCREW ISO 4017 M10X20 A4-70	SECHSKANTSCHRAUBE		
17	420001114	8	WASHER ISO 7089 10 A4	SCHEIBE		
18	420001514	2	WASHER ISO 7089 12 A4	SCHEIBE		
19	433009114	2	SPLIT PIN ISO 1234 8X63 A4	SPLINT		
20	433102508	2	RETAINING SPRING 5MM	SICHERUNGSFEDER		
21	433105008	3	RETAINING SPRING DIN 2194 6MM FS	SICHERUNGSFEDER		
22	790202014	1	ROPE PULLEY CPL	SEILROLLE KPL		
25	956092714	2	BUSHING 140/168.3X40 LHR355-20;10019728	BUCHSE		
26	949174814	2	PIN 58X113 LHRD900-40;10019758	BOLZEN		
28	421103314	12	WASHER DIN EN 28738 50 ST;	SCHEIBE		
29	971495903	1	HOIST LIMIT SWITCH EL ⇨ ❑ 578	SPITZENENDSCHALTER EL		
30	956319314	4	WP	WP		
31	948959414	4	PIN 58X95 LHRD900-40;10019758	BOLZEN		
32	433010314	4	SPLIT PIN ISO 1234 10X80 A4	SPLINT		
33	10551670	2	CONSOLE ST. CONST.	KONSOLE SCHWK		
34	406501314	4	HEX SCREW ISO 4017 M8X30 A4-70	SECHSKANTSCHRAUBE		
35	420001014	14	WASHER ISO 7089 8 A4	SCHEIBE		
37	726922114	2	RUBBER MOUNT	LAGER GUMMI		
38	10447017	2	LOCKING RING 8	SICHERUNGSRING		
39	10540493	12	HEX NUT ISO 10511 M8 A4	SECHSKANTMUTTER		
41	433101208	2	RETAINING SPRING 4MM	SICHERUNGSFEDER		
42	10541593	4	HEX SCREW ISO 4017 M8X85 A4-70	SECHSKANTSCHRAUBE		
43	411516914	2	HEX NUT ISO 4032 M12 A4-70	SECHSKANTMUTTER		
44	11260806	2	SUPPORT	AUFLAGE		
45	10539971	1	HEX SCREW ISO 4017 M10X40 A4-70	SECHSKANTSCHRAUBE		
46	10540511	2	WASHER ISO 7093-1 10 A4	SCHEIBE		
47	10540494	1	HEX NUT ISO 10511 M10 A4	SECHSKANTMUTTER		
48	433206014	1	SPRING PLUG DIN 11024 2.5	FEDERSTECKER		
49	10538808	2	HEX SCREW ISO 4017 M8X60 A4-70	SECHSKANTSCHRAUBE		
50	790422414	1	SIGN	SCHILD		
51	11252042	2	SUPPORT CPL ⇨ ❑ 579	AUFLAGE KPL		

OHNE BILD
WITHOUT ILLUSTRATION
SANS PLANCHE
SIN FIG.
SEM ILUSTRAÇÃO
БЕЗ ИЗОБРАЖЕНИЯ

600000

Pos.	Item	Quantity	Description	Bezeichnung	Serie	K
30	693155014	1	SOCKET SHELL	TUELLENGEHAEUSE		
31	605604714	1	MALE INSERT	STIFTEINSATZ		
32	605601701	6	CONTACT PIN	KONTAKTSTIFT		
33	260493402	1	REDUCER	REDUZIERUNG		
34	10045155	1	CABLE GLAND	KABELVERSCHRAUBUNG		
35	600454314	4	CONTROL LEAD	STEUERLEITUNG		
36	927521808	1	LIMIT SWITCH HOISTING ABOVE ⇨ ❑ 567	ENDSCHALTER HUB OBEN		
50	693157114	1	BS HOUSING	SOCKELGEHAEUSE		
51	605609514	1	FEMALE INSERT	BUCHSENEINSATZ		
52	693061514	2	STOPPER PLUG	BLINDSTOPFEN		

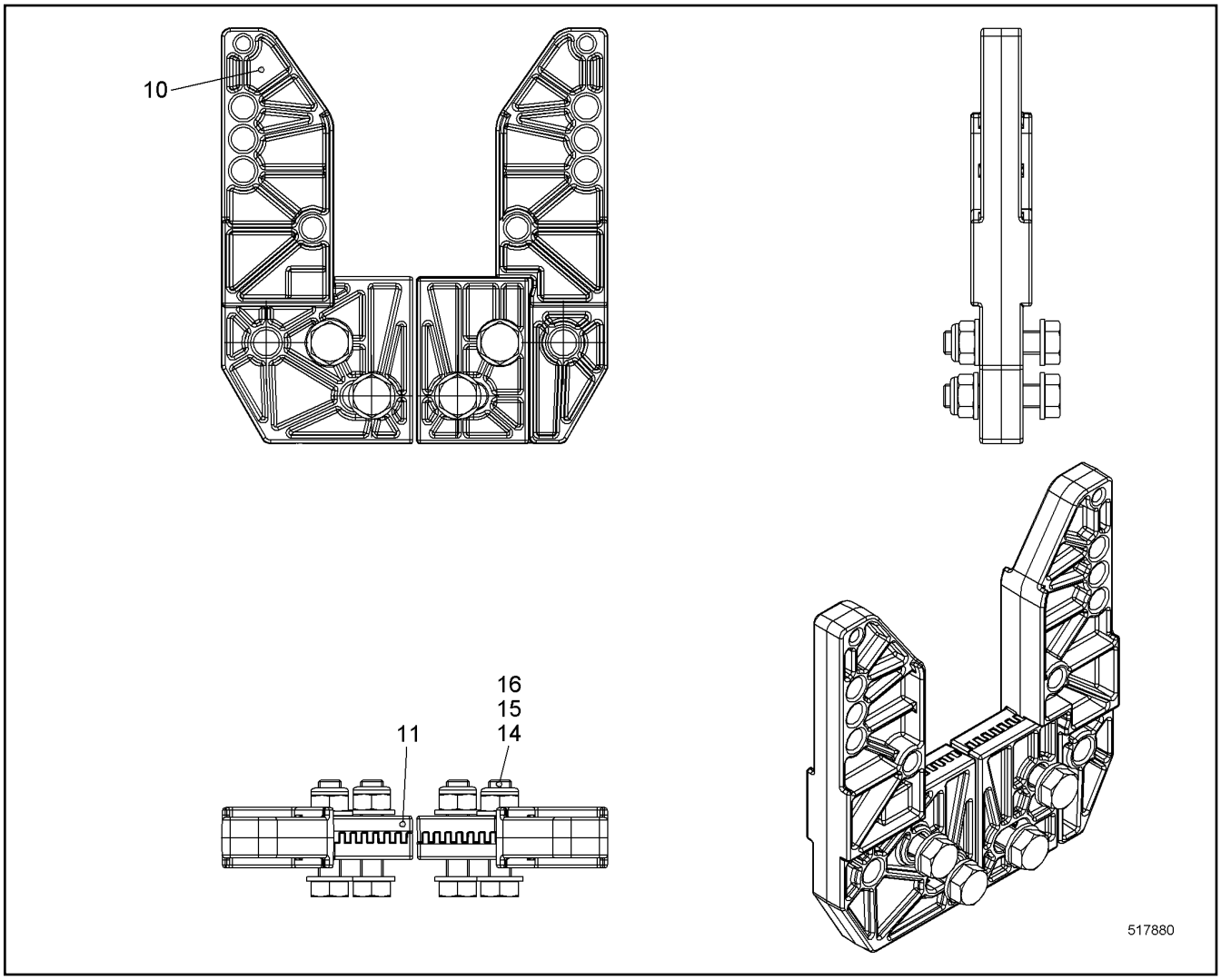

Pos.	Item	Quantity	Description	Bezeichnung	Serie	K
10	11219265	2	SUPPORT	AUFLAGE		
11	11219851	2	SHEET	PLATTE		
12	773400308	0.62	STEEL WIRE ROPE	STAHLDRAHTSEIL		
13	773920008	4	FERRULE	PRESSKLEMME		
14	11314349	4	CHEESE HEAD SCREW DIN 603 M8X35 A4-70	FLACHRUNDSCHRAUBE		
15	11314341	4	HEX NUT DIN EN 1663 M8 A4	SECHSKANTMUTTER		

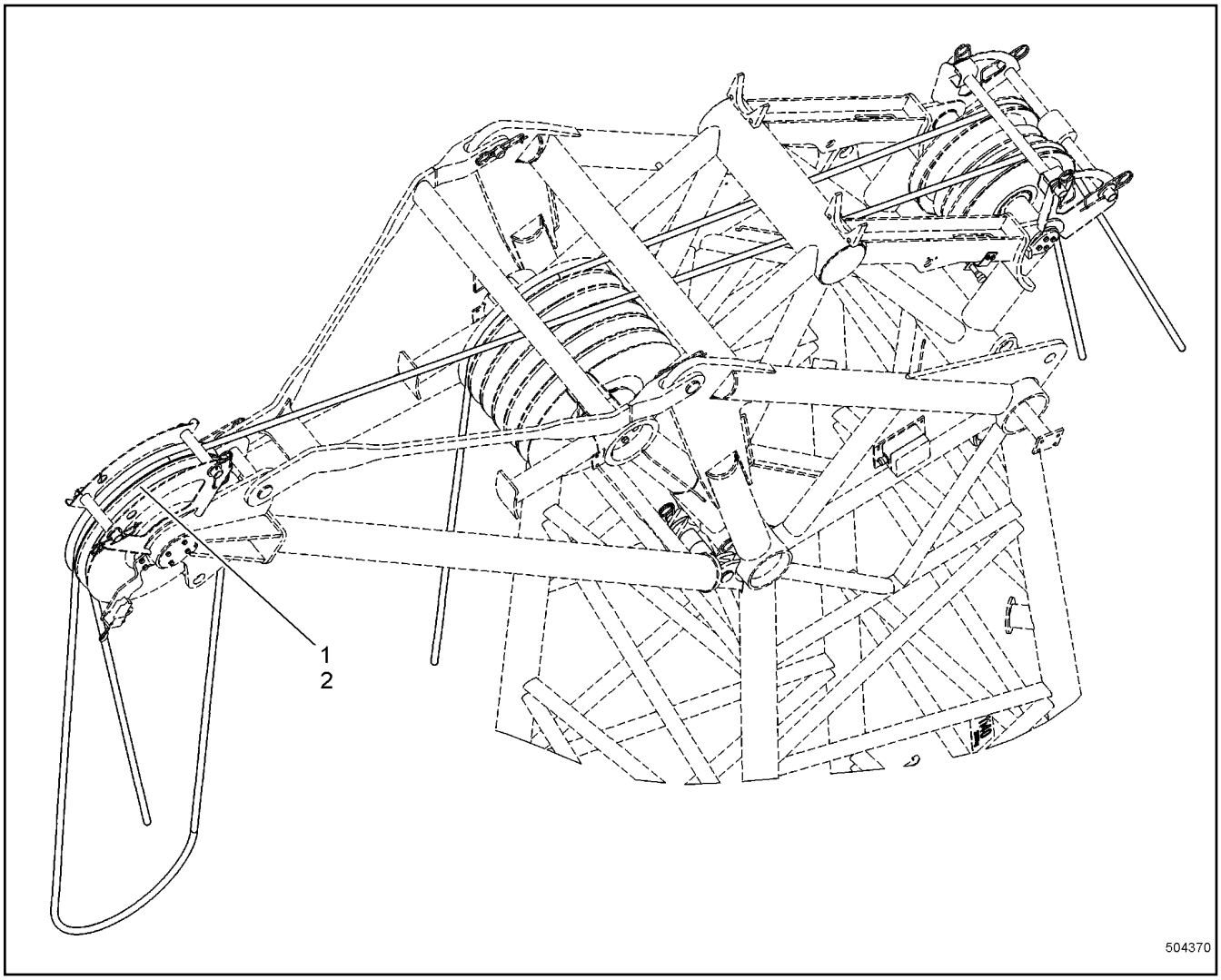

Pos.	Item	Quantity	Description	Bezeichnung	Serie	K
1	790202014	1	ROPE PULLEY CPL	SEILROLLE KPL		
2	790282814	1	SIGN	SCHILD		

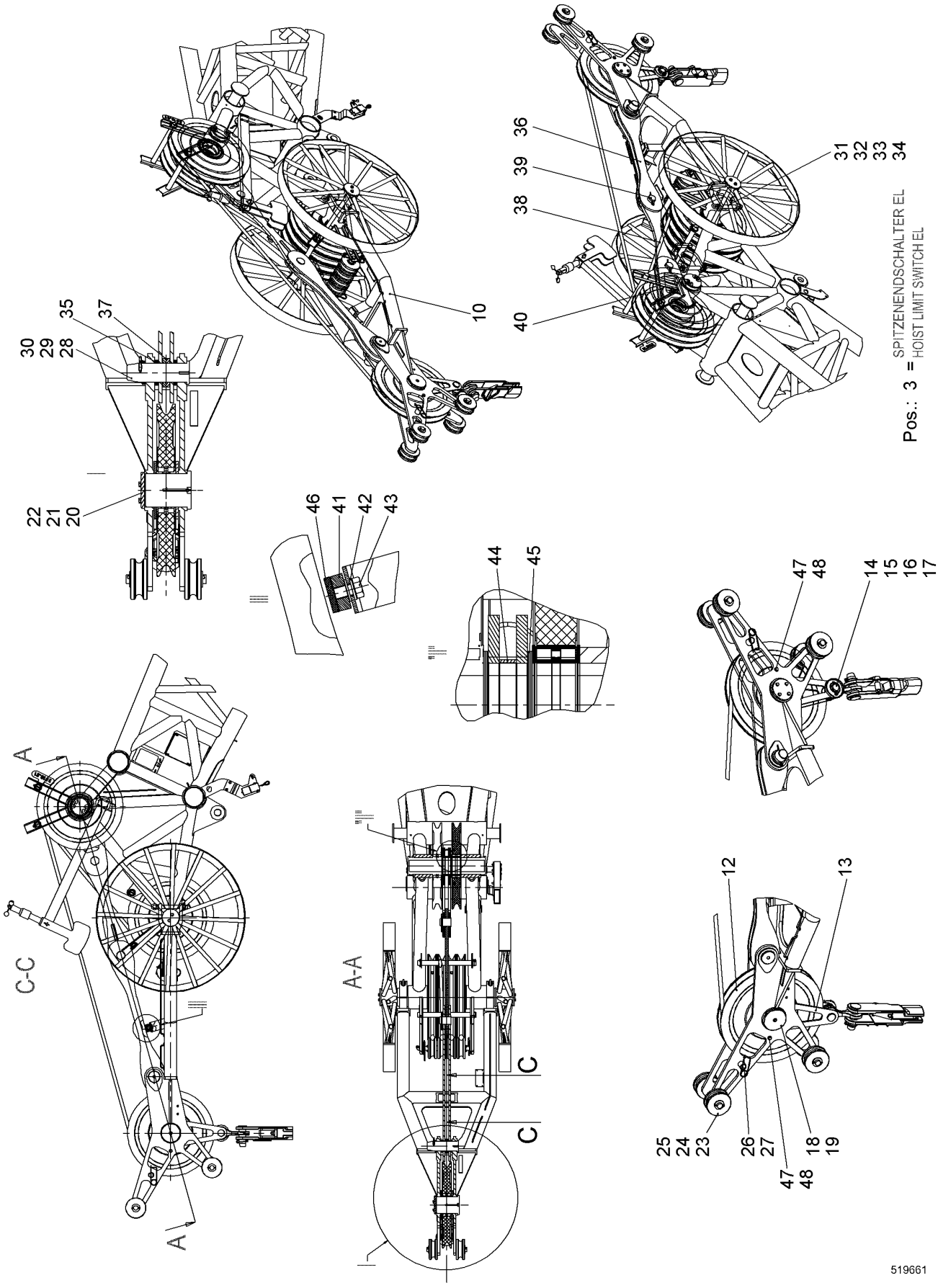
10
36
39
38
40
31
32
33
34
Pos.: 3 = SPITZENENDSCHALTER EL
HOIST LIMIT SWITCH EL
30
29
28
35
37
22
21
20
46
41
42
43
44
45
47
48
14
15
16
17
A
C-C
A
A-A
C
C
12
13
25
24
23
26
27
47
48
18
19
519661

Pos.	Item	Quantity	Description	Bezeichnung	Serie	K
3	919587114	1	HOIST LIMIT SWITCH EL ⇨ ❑ 583	SPITZENENDSCHALTER EL		
10	993877114	1	TIP BOOM ST.CONST.	SPITZEN AL SCHWK		
11	10224930	1	SIGN	SCHILD		
12	790202014	1	ROPE PULLEY CPL	SEILROLLE KPL		
13	950735414	2	TENSION PLATE	ZUGBLECH		
14	957261514	1	PIN 58X140 LHRD900-40;10019758	BOLZEN		
15	420004001	2	WASHER ISO 7089 48	SCHEIBE		
17	485544014	1	SAFETY PLUG W HINGE-LID 12X75	SICHERHEITSKLAPPSTECKER		
18	950735914	1	PIN	BOLZEN		
19	7743242	1	HYDRAULIC-TYPE LUBRICAT.NIPPLE	KEGELSCHMIERNIPPEL		
20	934756014	1	COVER	DECKEL		
21	10536581	4	LOCK WASHER 12 254 SMO;EN 10088-3	SICHERUNGSSCHEIBE		
22	406512614	4	HEX SCREW ISO 4017 M12X50 A4-70	SECHSKANTSCHRAUBE		
23	970961303	4	ROLLER	ROLLE		
24	420051514	4	WASHER ISO 7089 36 MS;	SCHEIBE		
25	433008814	4	SPLIT PIN ISO 1234 8X50 A4	SPLINT		
26	956374914	1	TUBE	ROHR		
27	433105414	2	RETAINING SPRING 4.5 MM	SICHERUNGSFEDER		
28	966429214	1	PIN	BOLZEN		
29	421103814	1	WASHER DIN EN 28738 80 ST;	SCHEIBE		
30	433010614	3	SPLIT PIN ISO 1234 10X100 A4	SPLINT		
31	956374714	2	PIN	BOLZEN		
32	402600314	2	RING BOLT DIN 580 M12 C15E;EN 10084	RINGSCHRAUBE		
33	421102414	2	WASHER DIN EN 28738 30 ST;	SCHEIBE		
34	432016214	2	SAFETY PLUG W HINGE-LID 8X42	SICHERHEITSKLAPPSTECKER		
35	957900214	16	WASHER 81/105X2 PA 6 G	SCHEIBE		
36	950735514	2	ANCHORING ROD	HALTESTANGE		
37	289022714	2	WASHER 81/120X15 PA 6 G	SCHEIBE		
38	950735614	1	ANCHORING ROD	HALTESTANGE		
39	959575714	2	PIN 73X95 LHRD900-40;10019758	BOLZEN		
40	950735714	2	TENSION PLATE	ZUGBLECH		
42	460022203	2	WASHER DIN 6916 21 C45	SCHEIBE		
43	10543919	1	HEX SCREW ISO 4017 M20X35 10.9	SECHSKANTSCHRAUBE		
44	956648114	1	BUSHING	BUCHSE		
45	11282810	8	WASHER 142/180X2 PA 6 G	SCHEIBE		
46	950840114	1	RUBBER	GUMMI		
47	406511414	2	HEX SCREW ISO 4017 M12X40 A4-70	SECHSKANTSCHRAUBE		
48	10536582	2	LOCK WASHER 12 254 SMO;EN 10088-3	SICHERUNGSSCHEIBE		

OHNE BILD
WITHOUT ILLUSTRATION
SANS PLANCHE
SIN FIG.
SEM ILUSTRAÇÃO
БЕЗ ИЗОБРАЖЕНИЯ

600000

Pos.	Item	Quantity	Description	Bezeichnung	Serie	K
30	693155014	1	SOCKET SHELL	TUELLENGEHAEUSE		
31	605604714	1	MALE INSERT	STIFTEINSATZ		
32	605601701	8	CONTACT PIN	KONTAKTSTIFT		
33	260493402	1	REDUCER	REDUZIERUNG		
34	10045155	1	CABLE GLAND	KABELVERSCHRAUBUNG		
35	600454314	4	CONTROL LEAD	STEUERLEITUNG		
36	927521808	1	LIMIT SWITCH HOISTING ABOVE ⇨ ❑ 567	ENDSCHALTER HUB OBEN		
50	693157114	1	BS HOUSING	SOCKELGEHAEUSE		
51	605609514	1	FEMALE INSERT	BUCHSENEINSATZ		
52	693061514	2	STOPPER PLUG	BLINDSTOPFEN		

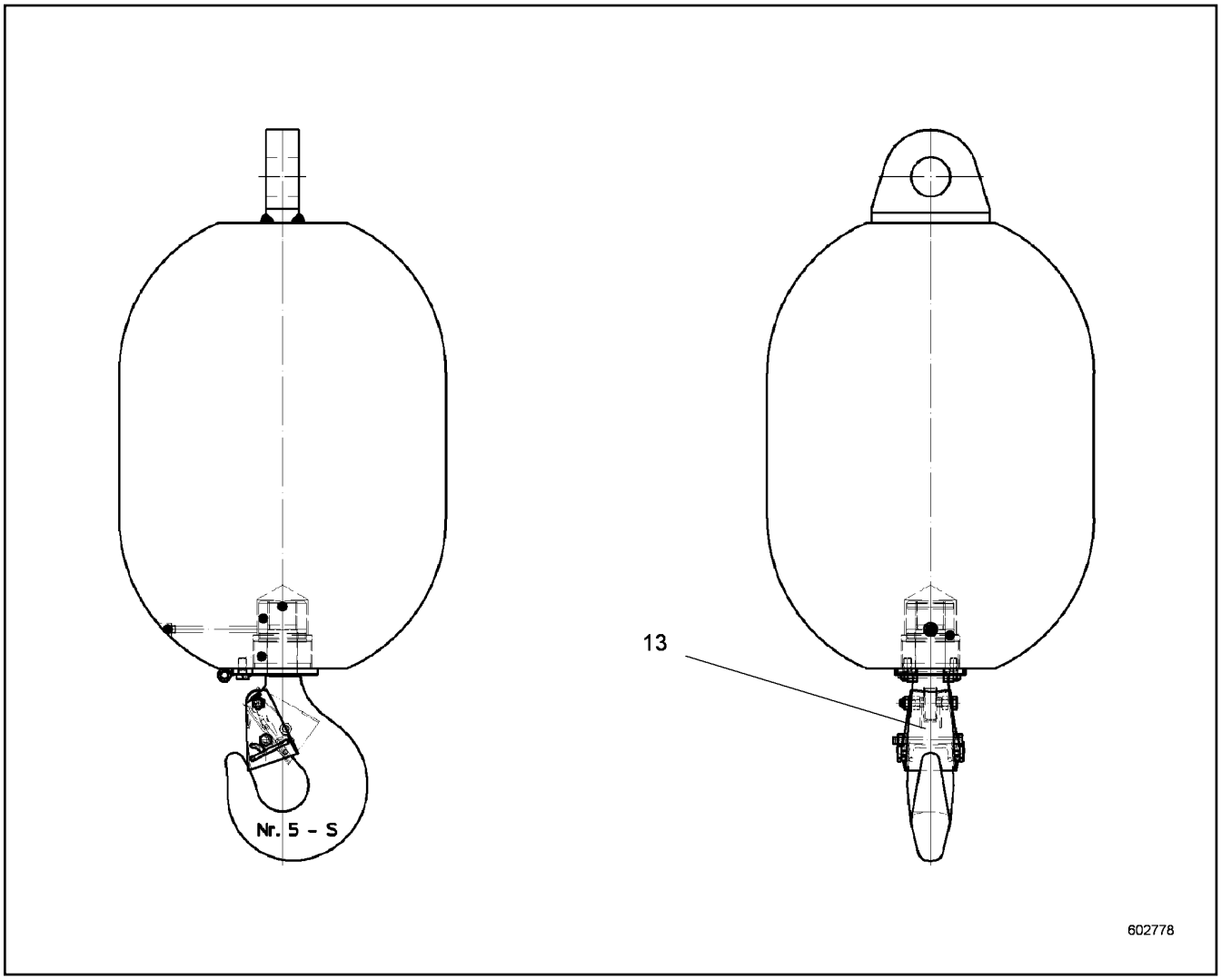

Pos.	Item	Quantity	Description	Bezeichnung	Serie	K
1	10522845	1	SINGLE HOOK	EINFACHHAKEN		
2	10522847	1	FLANGED BOLT MO90X4108X53	BUNDSCHRAUBE		
3	10522848	1	ROLLER BEARING	WAELZLAGER		
13	10348527	1	PL LATCH	PL FALLE		

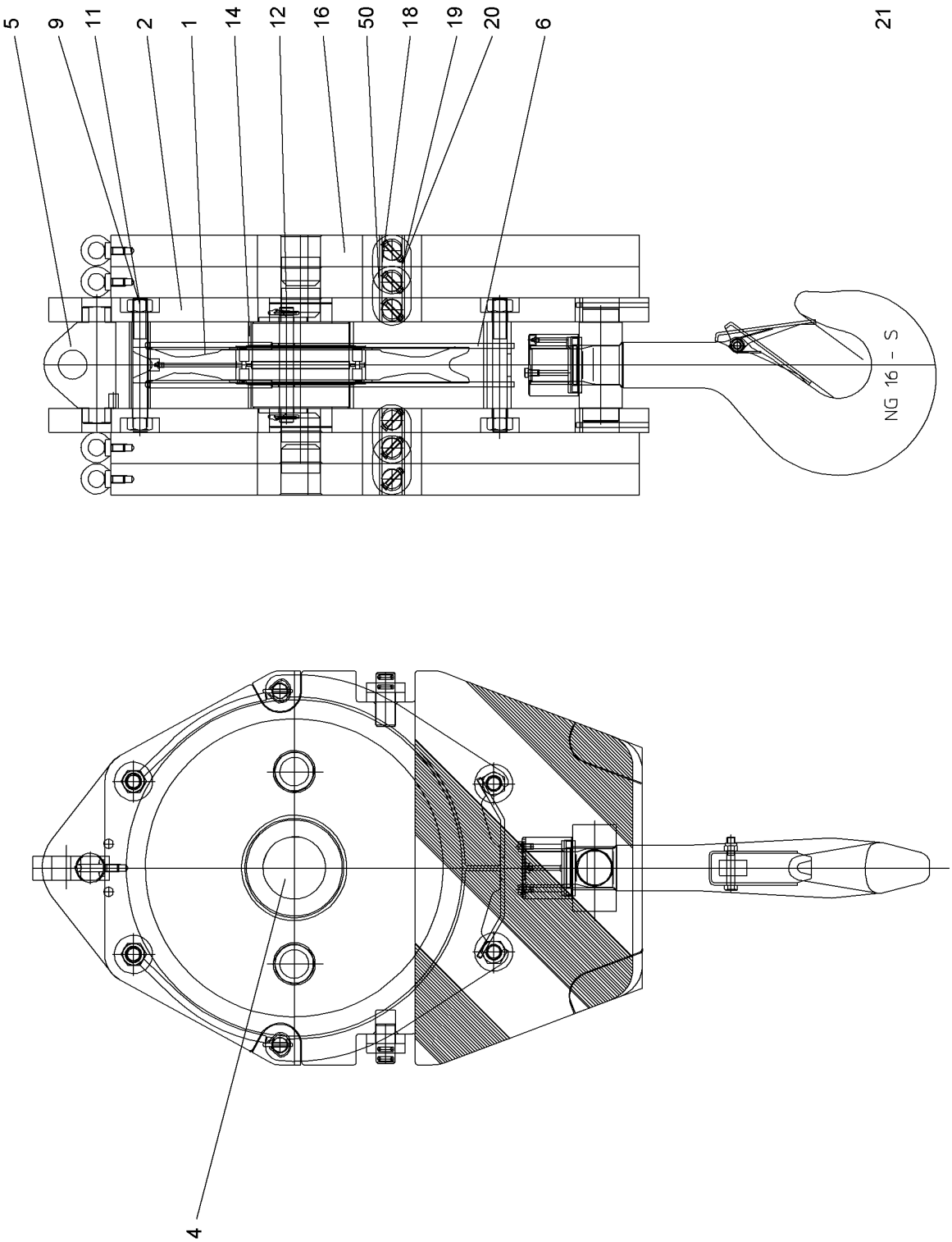

607601

Pos.	Item	Quantity	Description	Bezeichnung	Serie	K
1	10504352	1	ROPE PULLEY ⇨ ❑ 587	SEILROLLE		
2	11274624	2	SIDE PLATE	SEITENBLECH		
4	11493575	1	PIN	BOLZEN		
5	11481158	1	ROPE FIXING POINT	SEILFESTPUNKT		
6	11481159	1	ROPE GUARD	SEILSCHUTZ		
9	11237759	4	HEX SCREW DIN 931 M30X250 8.8	SECHSKANTSCHRAUBE		
11	10584965	4	NUT DIN 934 M30	MUTTER		
12	10814912	2	ROPE PROTECTION ROD	SEILSCHUTZSTANGE		
14	11493578	2	DISTANCE TUBE	DISTANZROHR		
16	11274636	4	PLATE	BLECH		
18	10591682	4	BUTT STRAP	LASCHE		
19	11236106	12	SCREW DIN 931 M8X050	SCHRAUBE		
20	11236108	12	HEX NUT DIN 985 M8	SECHSKANTMUTTER		
21	11274638	1	HANGER ⇨ ❑ 588	AUFHAENGUNG		
50	10591681	4	BUTT STRAP	LASCHE		

OHNE BILD
WITHOUT ILLUSTRATION
SANS PLANCHE
SIN FIG.
SEM ILUSTRAÇÃO
БЕЗ ИЗОБРАЖЕНИЯ

600000

Pos.	Item	Quantity	Description	Bezeichnung	Serie	K
1	11271491	1	ROPE SHEAVE	SEILSCHEIBE		
2	10573892	1	CYL ROLLER BEARING	ZYL ROLLENLAGER		
3	10573893	2	LOCKING RING	SICHERUNGSRING		
4	11312502	1	GREASE NIPPLE	SCHMIERNIPPEL		

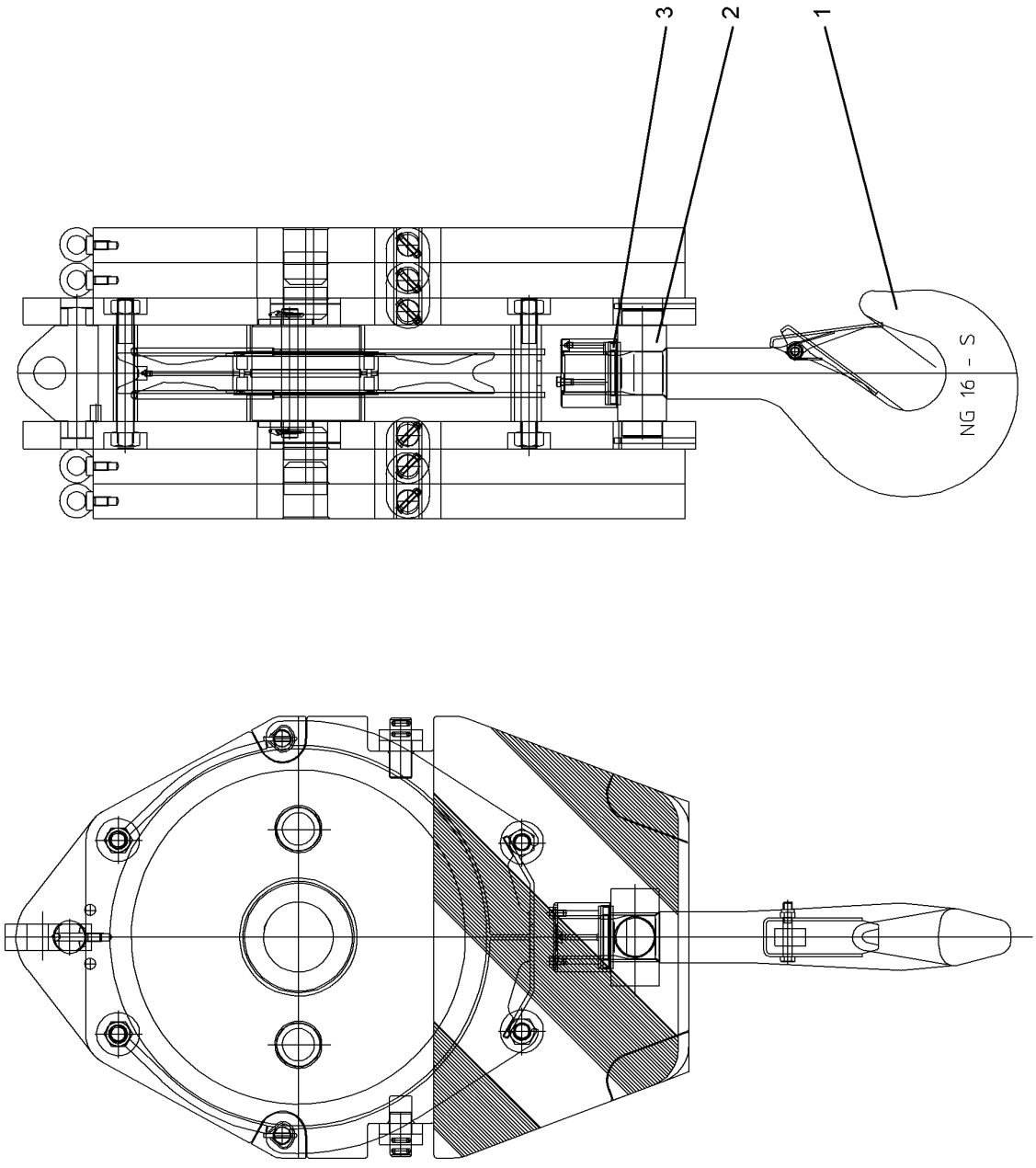

607602

Pos.	Item	Quantity	Description	Bezeichnung	Serie	K
1	11481162	1	SINGLE HOOK ⇨ ❑ 590	EINFACHHAKEN		
2	11274675	1	ROTATABLE BEAM	SCHWENKTRAVERSE		
3	10574043	1	ROLLER BEARING	WAELZLAGER		

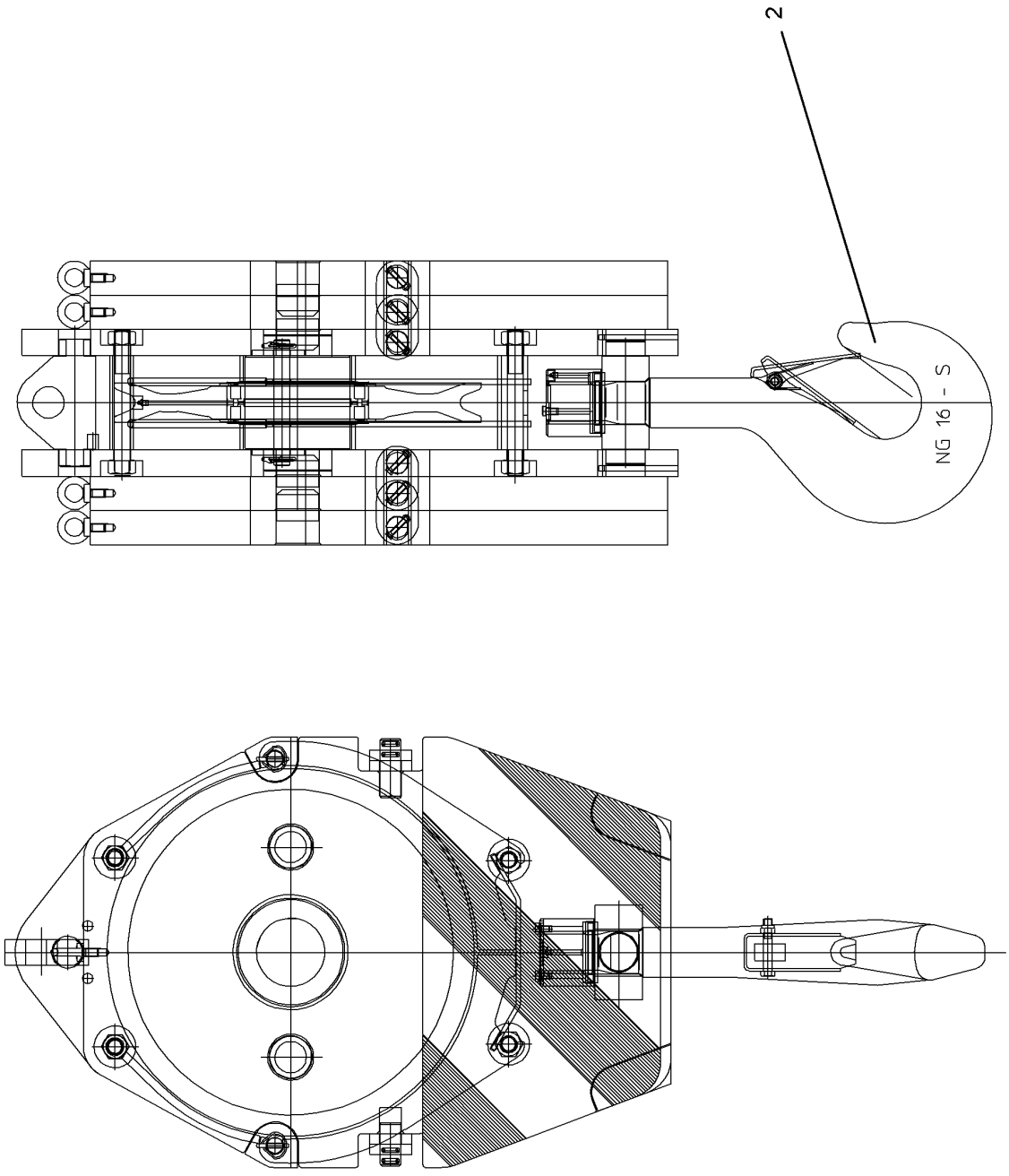

607603

Pos.	Item	Quantity	Description	Bezeichnung	Serie	K
2	10350196	1	SAFETY TRAP	SICHERUNGSFALLE		

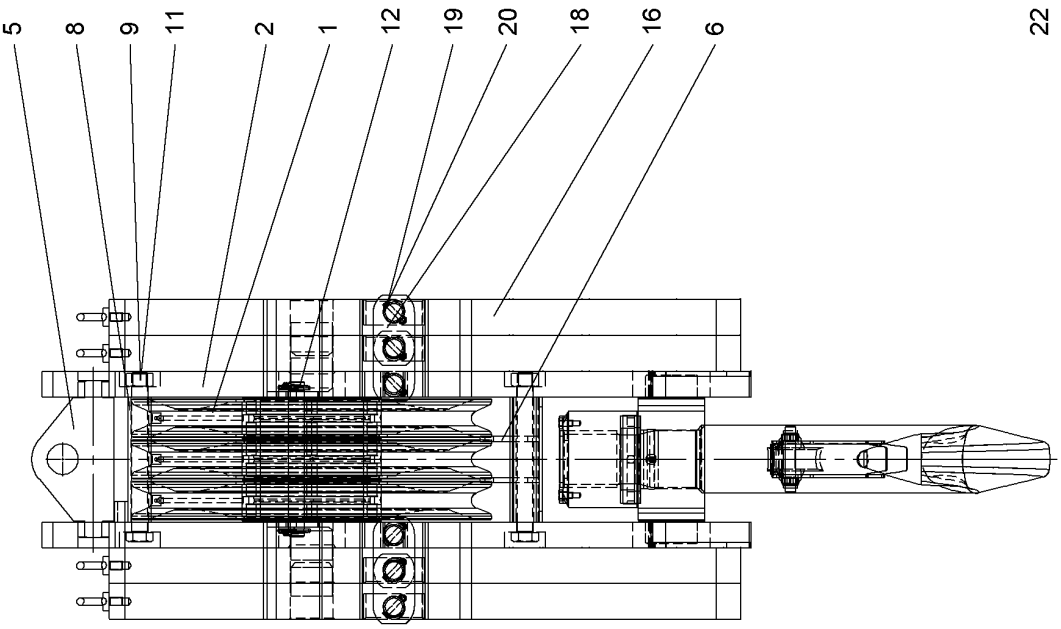

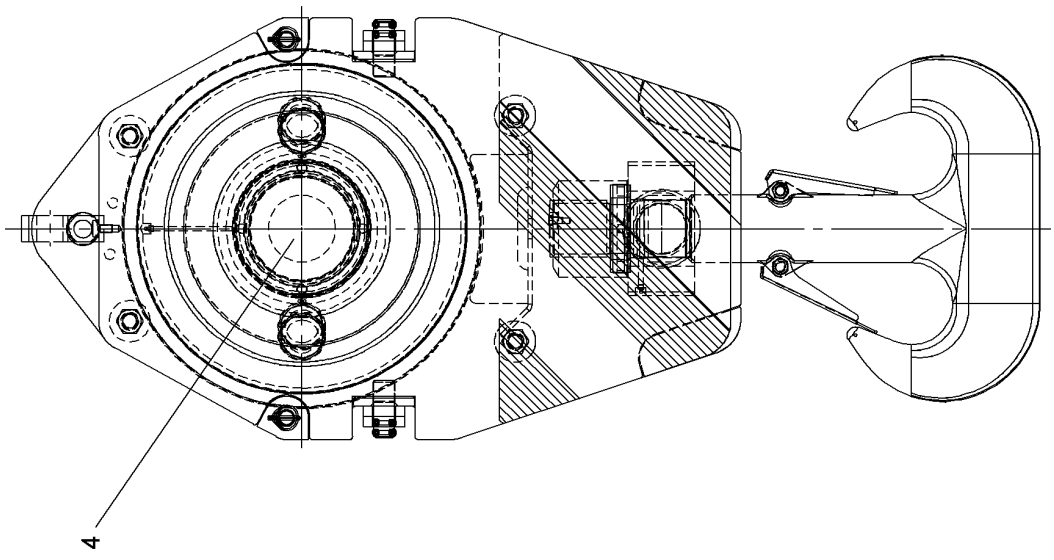

607443

Pos.	Item	Quantity	Description	Bezeichnung	Serie	K
1	10504352	3	ROPE PULLEY ⇨ ❑ 587	SEILROLLE		
2	11271456	2	SIDE PLATE	SEITENBLECH		
4	11271461	1	PIN	BOLZEN		
5	11210606	1	ROPE FIXING POINT	SEILFESTPUNKT		
6	11271479	1	ROPE GUARD	SEILSCHUTZ		
8	10517047	2	DISTANCE TUBE	DISTANZROHR		
9	11490268	4	HEX SCREW DIN 931 M30X310 8.8	SECHSKANTSCHRAUBE		
11	10584965	4	NUT DIN 934 M30	MUTTER		
12	11271482	2	ROPE PROTECTION ROD	SEILSCHUTZSTANGE		
16	11271486	4	PLATE	BLECH		
18	11271487	8	BUTT STRAP	LASCHE		
19	11236106	12	SCREW DIN 931 M8X050	SCHRAUBE		
20	11236108	12	HEX NUT DIN 985 M8	SECHSKANTMUTTER		
22	11271488	1	HANGER ⇨ ❑ 594	AUFHAENGUNG		

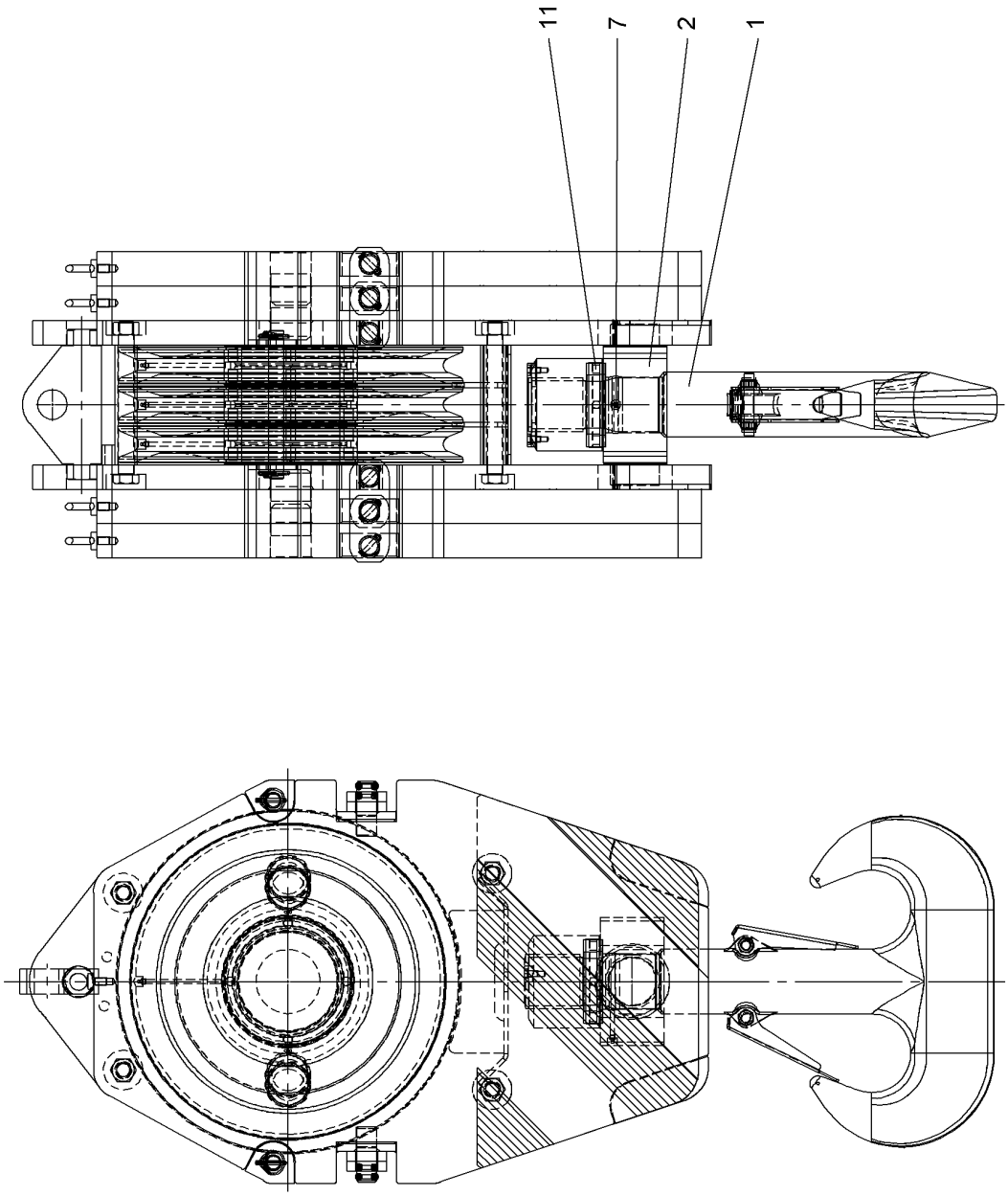
11
7
2
1
607444

Pos.	Item	Quantity	Description	Bezeichnung	Serie	K
1	11271489	1	TWIN HOOK ⇨ ❑ 596	DOPPELHAKEN		
2	11271490	1	ROTATABLE BEAM	SCHWENKTRAVERSE		
7	10571619	1	GREASE NIPPLE	SCHMIERNIPPEL		
11	10573891	1	ROLLER BEARING	WAELZLAGER		

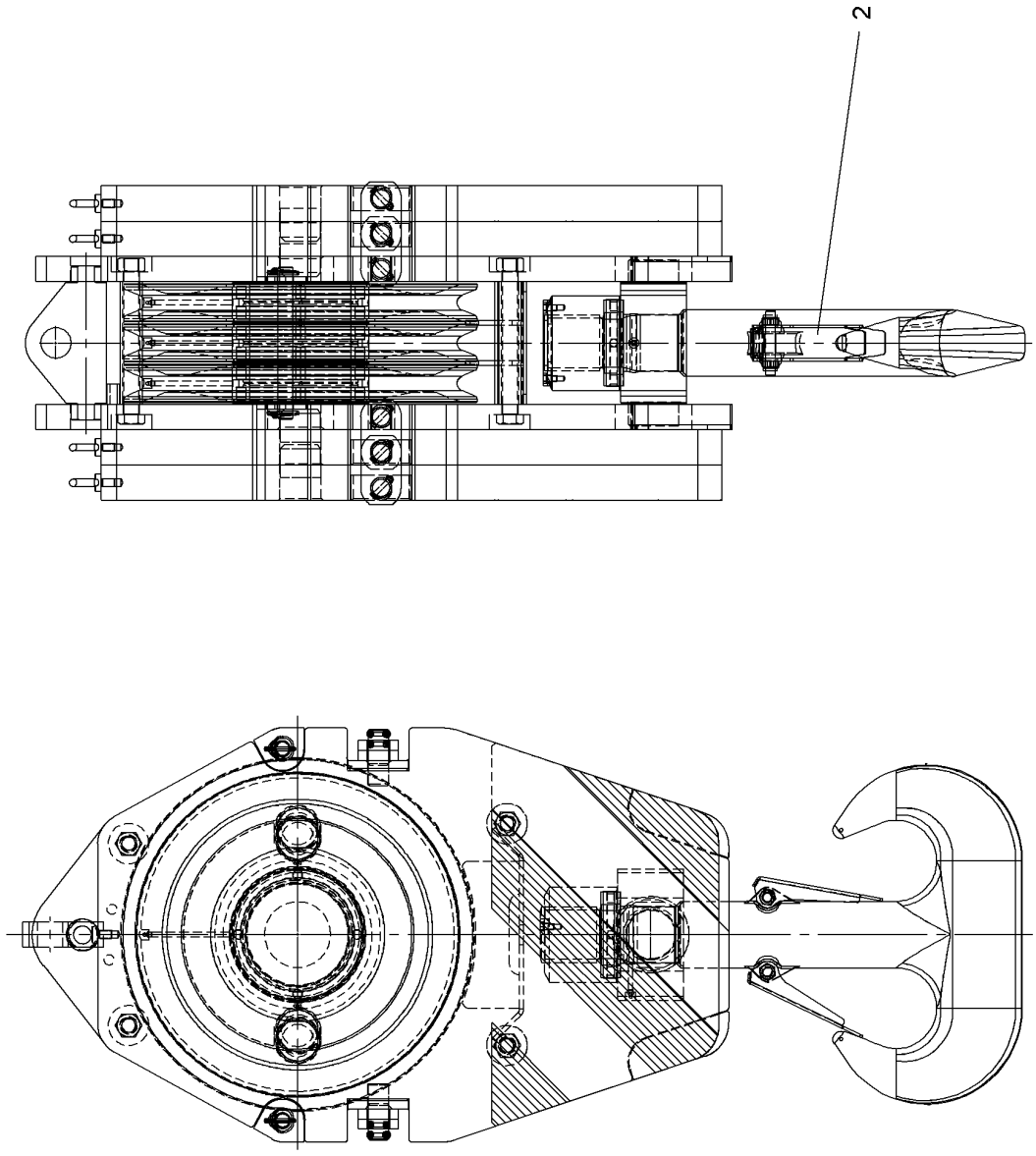
2
607445

Pos.	Item	Quantity	Description	Bezeichnung	Serie	K
2	10599212	2	SAFETY TRAP	SICHERUNGSFALLE		

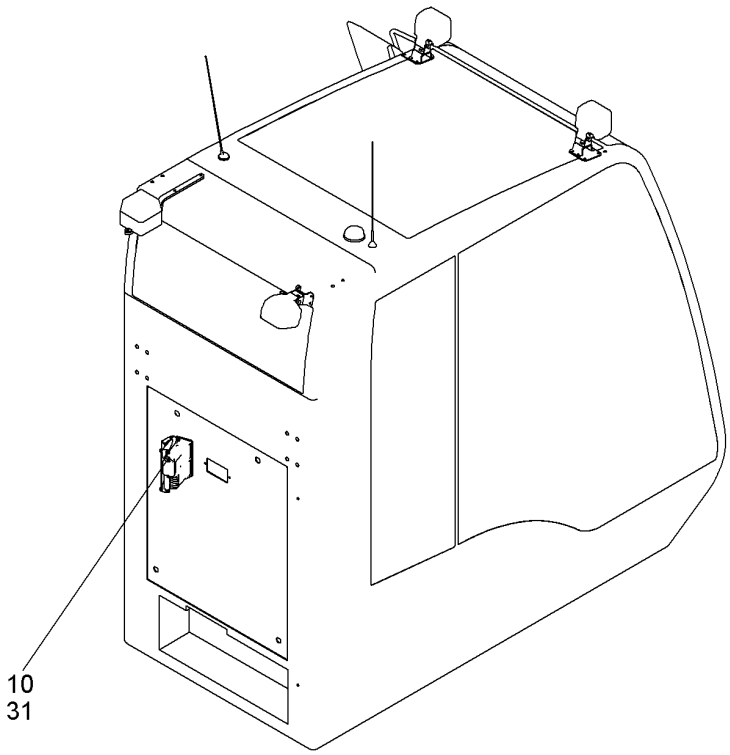

515869

Pos.	Item	Quantity	Description	Bezeichnung	Serie	K
10	11223226	1	MODEM CPL RFK ⇨ ❑ 599	MODEM KPL NRS		
31	10685952	1	ELECTRONIC MODULES	E-BAUGRUPPE		
32	10541838	1	STICKER	AUFKLEBER		

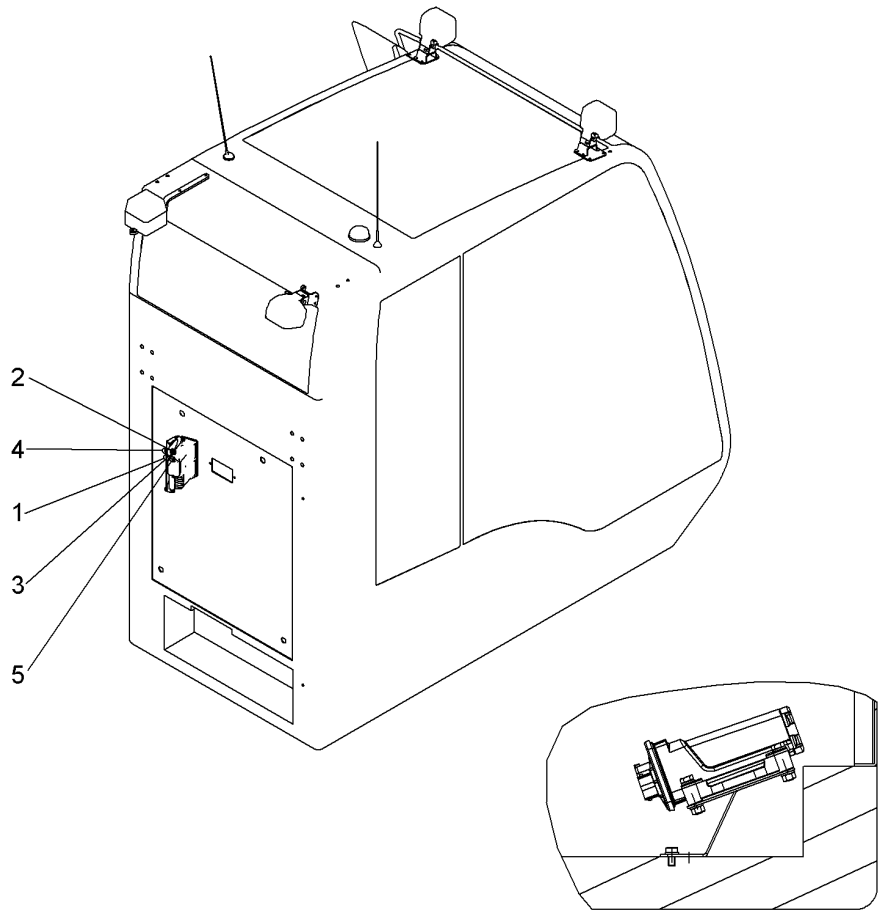

Pos.	Item	Quantity	Description	Bezeichnung	Serie	K
1	11223086	1	WP	WP		
2	10538797	4	HEX SCREW ISO 4017 M6X30 A4-70	SECHSKANTSCHRAUBE		
3	420000414	10	WASHER ISO 7089 6 A4	SCHEIBE		
4	411517114	4	HEX NUT ISO 4032 M6 A4-70	SECHSKANTMUTTER		
5	485557714	2	HEX SCREW ISO 4017 M6X12 A4-70	SECHSKANTSCHRAUBE		

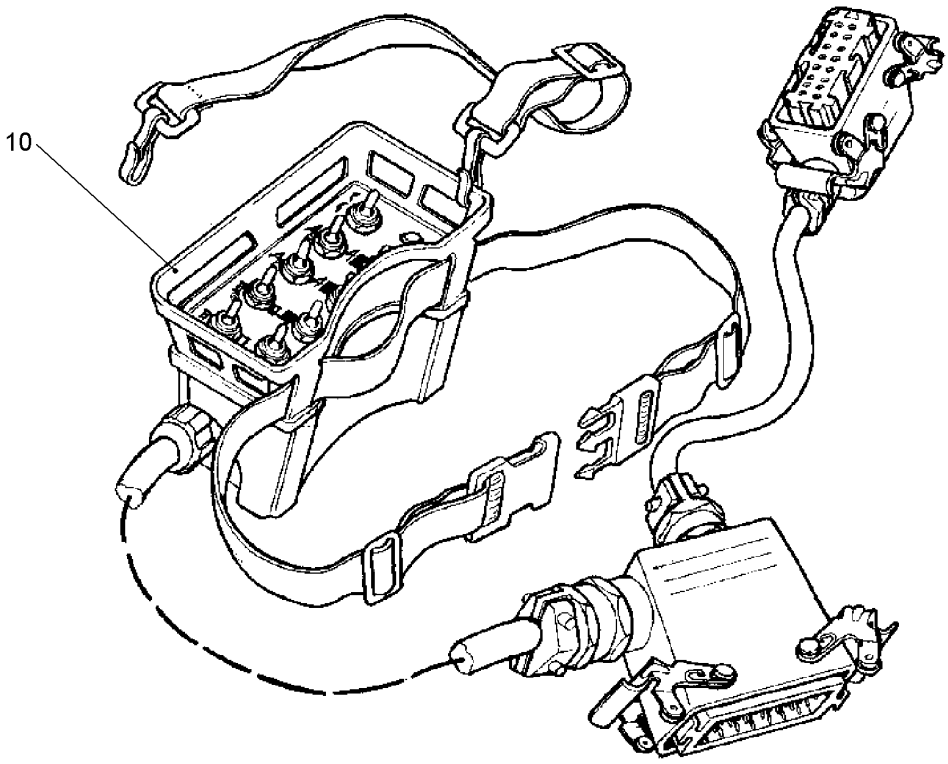

Pos.	Item	Quantity	Description	Bezeichnung	Serie	K
10	11236557	1	CONTROL CONSOLE	STEUERPULT		

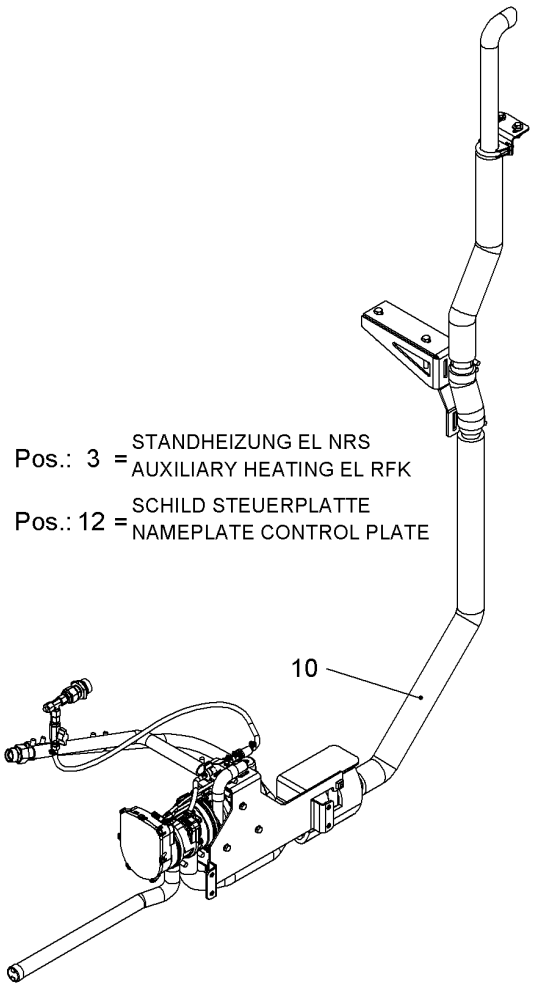

Pos.	Item	Quantity	Description	Bezeichnung	Serie	K
3	11266526	1	AUXILIARY HEATING EL RFK ⇨ ❑ 602	STANDHEIZUNG EL NRS		
10	11294445	1	HEATING RFK ⇨ ❑ 603	HEIZUNG NRS		
12	10579680	1	NAMEPLATE CONTROL PLATE	SCHILD STEUERPLATTE		

OHNE BILD
WITHOUT ILLUSTRATION
SANS PLANCHE
SIN FIG.
SEM ILUSTRAÇÃO
БЕЗ ИЗОБРАЖЕНИЯ

600000

Pos.	Item	Quantity	Description	Bezeichnung	Serie	K
11	11266528	1	WIRING HARNESS	KABELSTRANG		
20	6905461	1	PRESETTING TIMER	VORWAHLUHR		

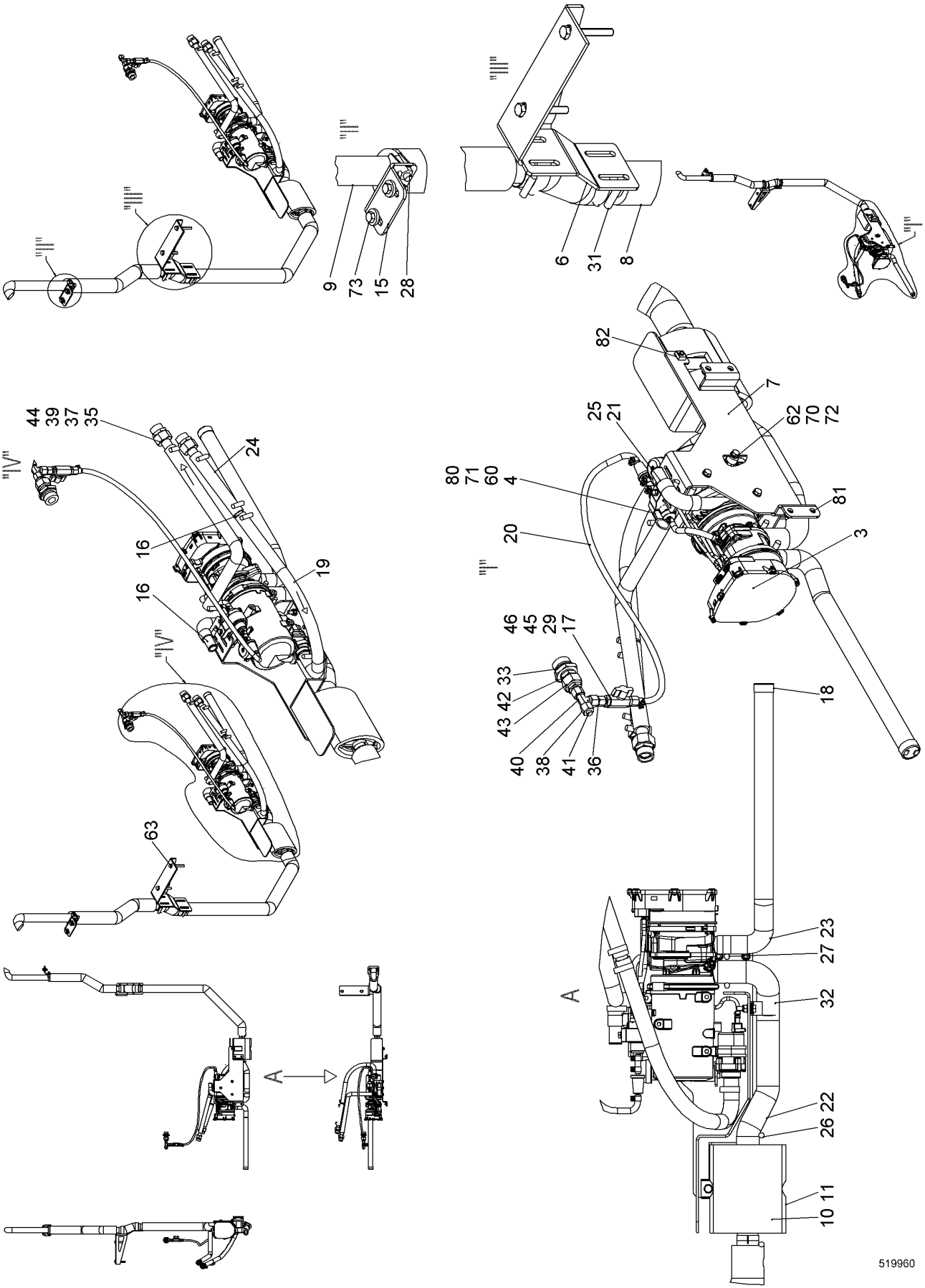
9
73
15
28
6
31
8
82
7
25
21
62
70
72
80
71
60
4
81
20
3
46
45
29
17
43
42
33
40
38
41
36
18
44
39
37
35
24
16
19
16
63
A
27
23
32
26
22
10
11
519960

Pos.	Item	Quantity	Description	Bezeichnung	Serie	K
3	11080525	1	WATER HEATING SYSTEM	WASSERHEIZGERAET		
4	11110051	1	DOSING PUMP	DOSIERPUMPE		
6	11271007	1	WP	WP		
7	11272006	1	HOLDER	HALTER		
8	11271008	1	FLUE GAS PIPE CPL	ABGASROHR KPL		
9	11271011	1	FLUE GAS PIPE CPL	ABGASROHR KPL		
10	553187208	1	EXHAUST SILENCER	SCHALLDAEMPFER		
11	11272566	1	INSULATING JACKET	ISOLIERMATTE		
15	11270062	1	WP	WP		
16	11272895	2	CONNECTING PIPE	VERBINDUNGSROHR		
17	11270955	1	BALL VALVE	KUGELHAHN		
18	11282707	1	END CAP	ENDKAPPE		
19	11238170	1	FORM HOSE	FORMSCHLAUCH		
20	553191108	2	FUEL HOSE	KRAFTSTOFFSCHLAUCH		
21	550930514	1	FORM HOSE	FORMSCHLAUCH		
22	553084214	1	HOSE	SCHLAUCH		
23	11271411	1	HOSE	SCHLAUCH		
24	11621772	5	COOLING WATER HOSE	KUEHLWASSERSCHLAUCH		
25	482000814	8	HOSE CLAMP	SCHLAUCHSCHELLE		
26	550849508	5	HOSE CLAMP	SCHLAUCHSCHELLE		
27	7004780	1	CLAMP	SCHELLE		
28	11215976	1	CLAMP	SCHELLE		
29	553102308	6	HOSE CLAMP	SCHLAUCHSCHELLE		
31	550838008	2	HOSE CLAMP	SCHLAUCHSCHELLE		
32	7362551	1	FASTENING CLAMP	HALTERUNGSSCHELLE		
33	247043102	1	FLANGE JOINT	VERSCHRAUBUNG		
35	956385814	2	FITTINGS	STUTZEN		
36	11657232	1	FLANGE JOINT	VERSCHRAUBUNG		
37	247000902	2	FLANGE JOINT	VERSCHRAUBUNG		
38	247048702	1	FLANGE JOINT	VERSCHRAUBUNG		
39	477102814	2	FLANGE JOINT	VERSCHRAUBUNG		
40	247242302	1	FLANGE JOINT	VERSCHRAUBUNG		
41	477700414	1	FLANGE JOINT	VERSCHRAUBUNG		
42	247009702	1	FLANGE JOINT	VERSCHRAUBUNG		
43	485436414	1	FLANGE JOINT	VERSCHRAUBUNG		
44	247049002	2	FLANGE JOINT	VERSCHRAUBUNG		
45	11282770	1	BOX NUT DIN 3870-B2-LL8 M14X1.5	UEBERWURFMUTTER		
46	11271905	1	HOSE UNION	SCHLAUCHSTUTZEN		
60	10538797	1	HEX SCREW ISO 4017 M6X30 A4-70	SECHSKANTSCHRAUBE		
62	406501314	7	HEX SCREW ISO 4017 M8X30 A4-70	SECHSKANTSCHRAUBE		
63	10539293	2	HEX SCREW ISO 4017 M10X75 A4-70	SECHSKANTSCHRAUBE		
70	10562095	4	WASHER 10/20X11 S355J2+AR;EN 10025-2	SCHEIBE		
71	420000414	2	WASHER ISO 7089 6 A4	SCHEIBE		
72	420001014	10	WASHER ISO 7089 8 A4	SCHEIBE		
73	421300514	4	WASHER DIN 6340 8.4 C35	SCHEIBE		
80	411517114	1	HEX NUT ISO 4032 M6 A4-70	SECHSKANTMUTTER		
81	10540493	7	HEX NUT ISO 10511 M8 A4	SECHSKANTMUTTER		
82	485550114	1	CAGE NUT M8-RR-123-47	KAEFIGMUTTER		
100	11295194	2	STICKER	AUFKLEBER		
101	4002551	4	COUNTERSUNK SCREW DIN 7991 M8X25 8.8	SENKSCHRAUBE		

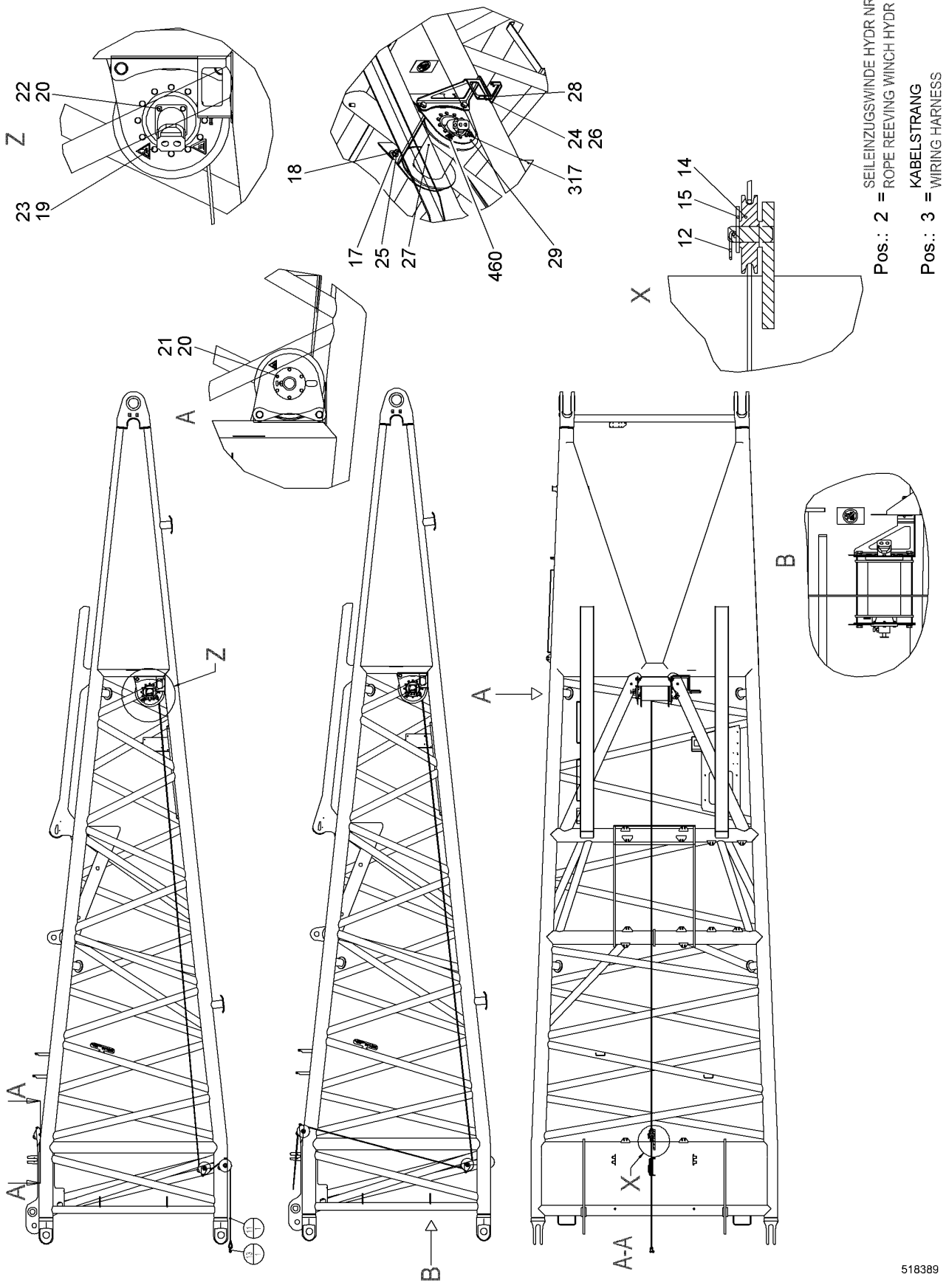
Z
22
20
23
19
18
28
24
26
317
17
25
27
460
29
X
12
15
14
Pos.: 2 = SEILEINZUGSWINDE HYDR NRS
ROPE REEVING WINCH HYDR RFK
Pos.: 3 = KABELSTRANG
WIRING HARNESS
21
20
A
B
A-A
518389

Pos.	Item	Quantity	Description	Bezeichnung	Serie	K
2	10542516	1	ROPE REEVING WINCH HYDR RFK ⇨ ❑ 607	SEILEINZUGSWINDE HYDR NRS		
3	10226574	1	WIRING HARNESS	KABELSTRANG		
4	10524392	1	HOSE LIST ⇨ ❑ 610	SCHLAUCHLISTE		
11	774762314	1	ROPE	SEIL		
12	433105414	2	RETAINING SPRING 4.5 MM	SICHERUNGSFEDER		
13	773930114	1	SHACKLE	SCHAEKEL		
14	967216103	2	ROPE PULLEY CPL ⇨ ❑ 611	SEILROLLE KPL		
15	385031714	2	WP	WP		
17	10544174	8	WASHER ISO 7089 20	SCHEIBE		
18	10544157	4	HEX NUT ISO 10511 M20 10	SECHSKANTMUTTER		
19	406511914	12	HEX SCREW ISO 4017 M10X25 A4-70	SECHSKANTSCHRAUBE		
20	10447017	10	LOCKING RING 8	SICHERUNGSRING		
21	406501314	6	HEX SCREW ISO 4017 M8X30 A4-70	SECHSKANTSCHRAUBE		
22	406501414	4	HEX SCREW ISO 4017 M8X25 A4-70	SECHSKANTSCHRAUBE		
23	10447016	12	LOCKING RING 10	SICHERUNGSRING		
24	406532614	2	HEX SCREW ISO 4017 M6X20 A4-70	SECHSKANTSCHRAUBE		
25	10543922	4	HEX SCREW ISO 4017 M20X50 10.9	SECHSKANTSCHRAUBE		
26	420000414	2	WASHER ISO 7089 6 A4	SCHEIBE		
27	592069414	1	WINCH ⇨ ❑ 612	WINDE		
28	994001014	1	VALVE MOUNTING	VENTILHALTERUNG		
29	918678214	1	WINCH FRAME	WINDENRAHMEN		
317	773195214	1	SIGN	SCHILD		
460	773195614	2	NAMEPLATE UVV	SCHILD UVV		

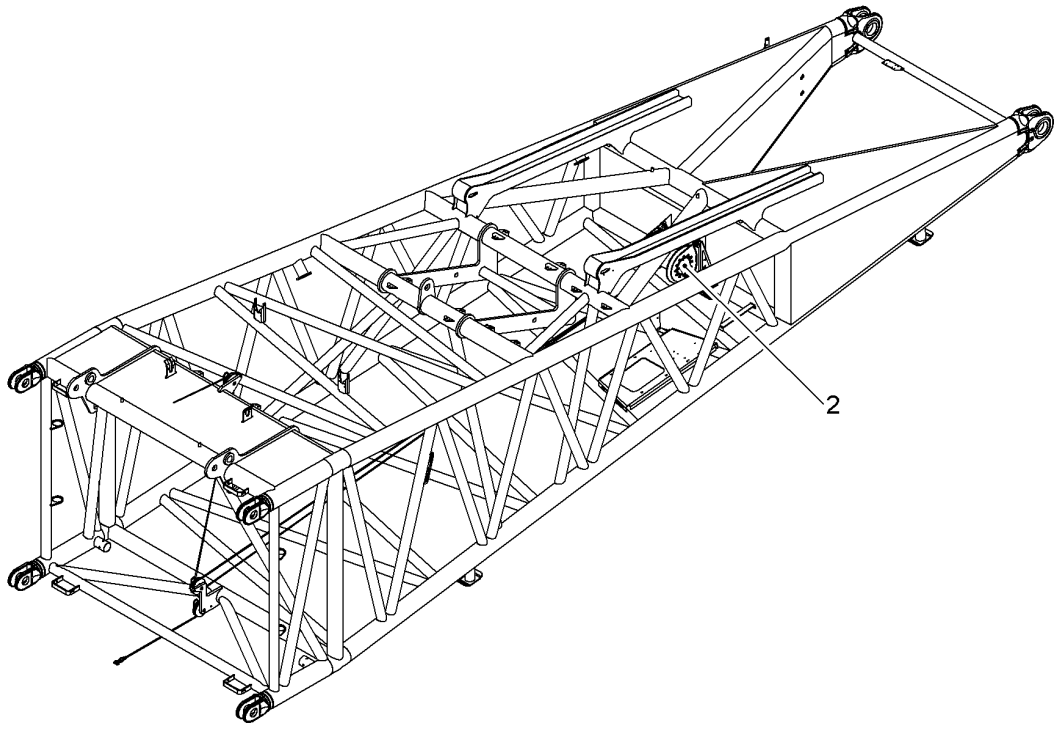

Pos.	Item	Quantity	Description	Bezeichnung	Serie	K
2	10517262	1	TUBING HYDR ⇨ ❑ 608	VERROHRUNG HYDR		

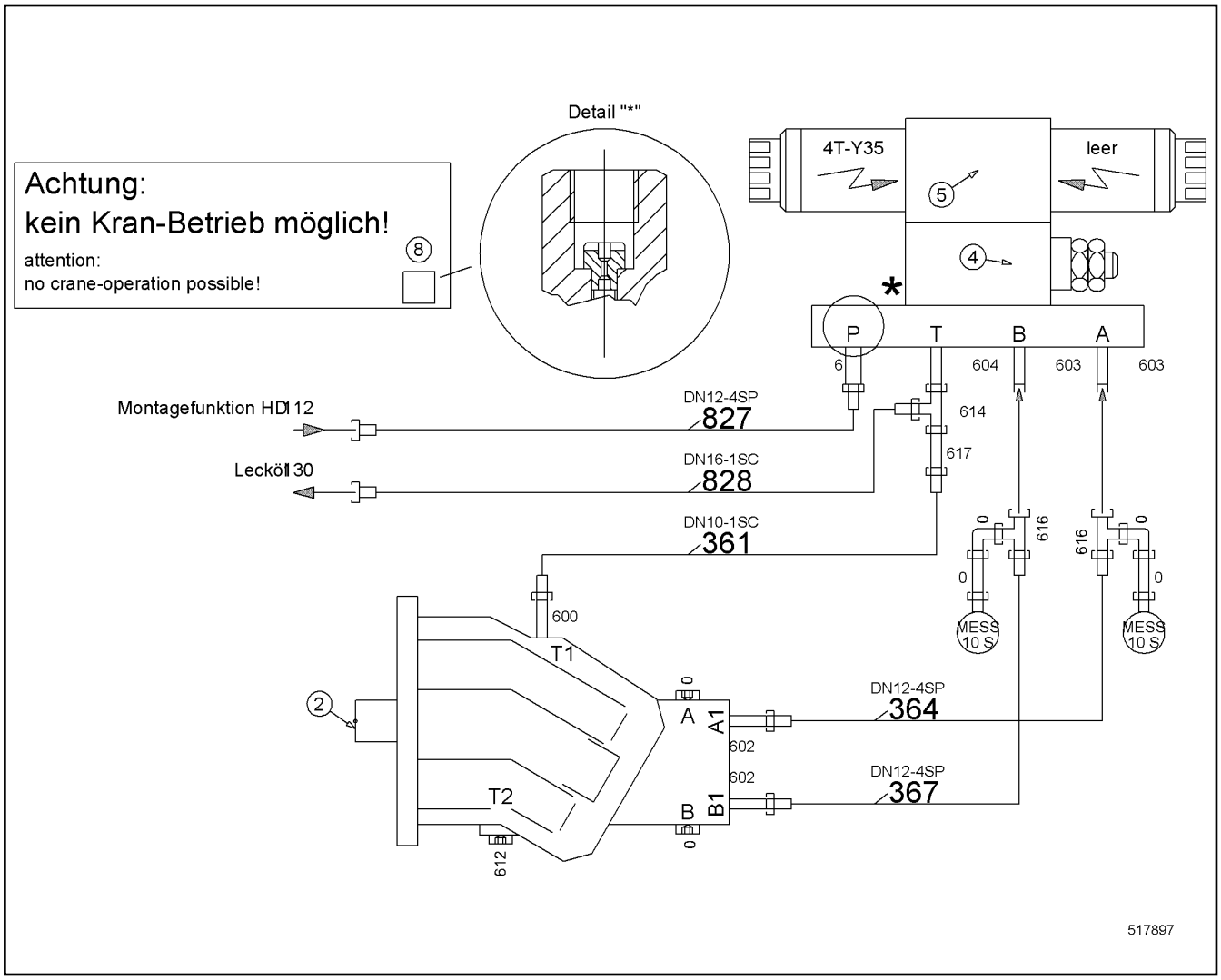

Pos.	Item	Quantity	Description	Bezeichnung	Serie	K
2	510232214	1	OIL MOTOR ⇨ ❑ 609	OELMOTOR		
3	511455014	1	CONNECTING PLATE	ANSCHLUSSPLATTE		
4	511467914	1	PRESSURE LIMITING VALVE	DRUCKBEGRENZUNGSVENTIL		
5	510427214	1	DIRECTIONAL CONTROL VALVE	WEGEVENTIL		
6	929796914	1	RESTRICTOR BODY	DROSSELKOERPER		
7	714002114	1	MAIN JET SOLEX 1.2MM	HAUPTDUESE SOLEX		
8	10099300	1	SIGN	SCHILD		
600	471039708	1	FLANGE JOINT	VERSCHRAUBUNG		
602	471033014	2	FLANGE JOINT	VERSCHRAUBUNG		
603	471033214	2	FLANGE JOINT	VERSCHRAUBUNG		
604	247009702	1	FLANGE JOINT	VERSCHRAUBUNG		
612	790259414	1	FLANGE JOINT	VERSCHRAUBUNG		
613	510664814	2	GAUGE CONNECTION	MESSSTUTZEN		
614	247128502	1	FLANGE JOINT	VERSCHRAUBUNG		
615	485433314	2	FLANGE JOINT	VERSCHRAUBUNG		
616	7407098	2	FLANGE JOINT	VERSCHRAUBUNG		
617	485436414	1	FLANGE JOINT	VERSCHRAUBUNG		

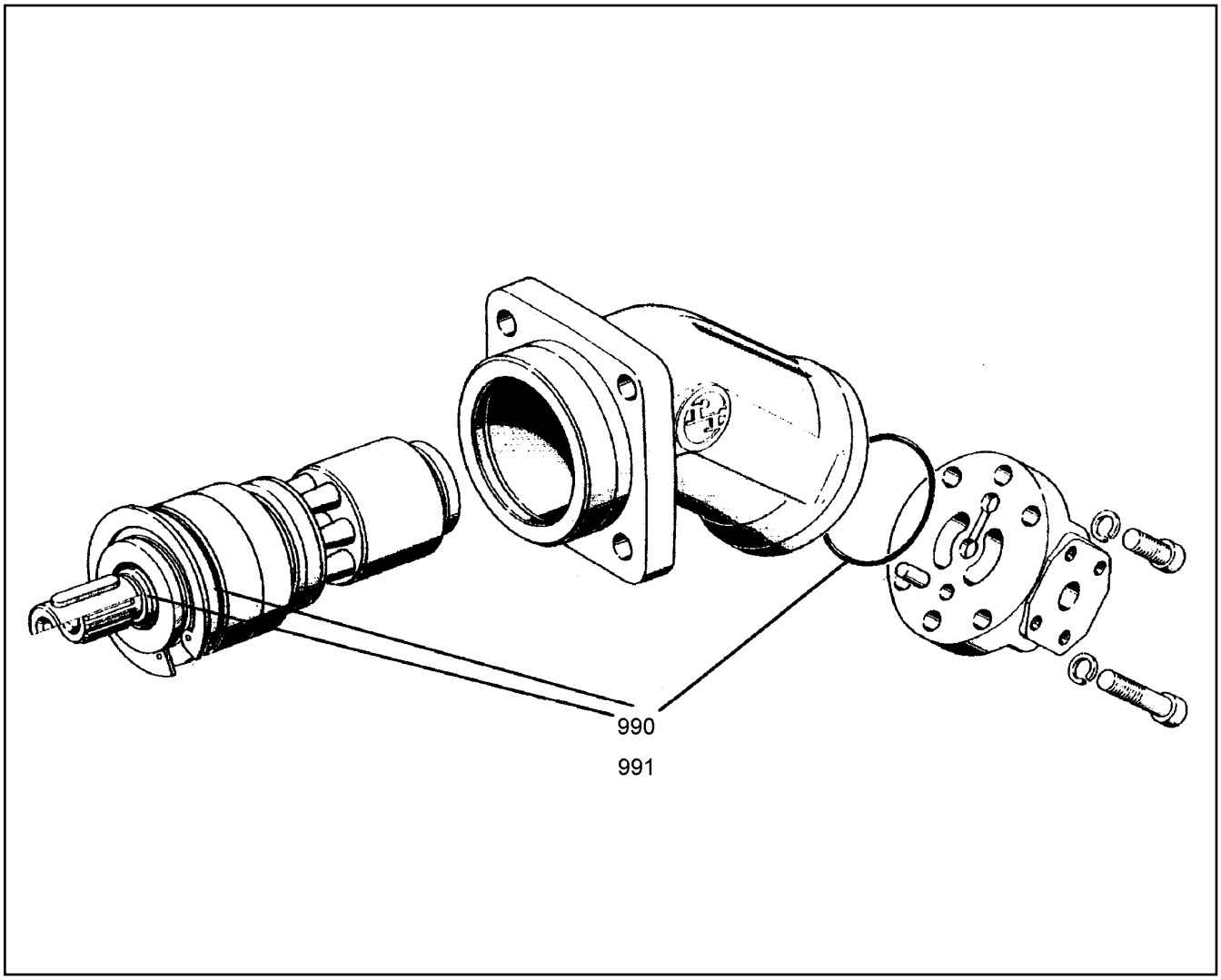

Pos.	Item	Quantity	Description	Bezeichnung	Serie	K
990	981967114	1	SEALING SET CPL	DS KPL		

ACHTUNG !
ATTENTION !
ATTENTION !
ATENCIÓN !
ATENÇÃO !
ВНИМАНИЕ

Für Schlauchbestellungen kann über die Schlauchnummer, in der entsprechenden Schlauchliste, die Identnummer festgestellt werden.

For ordering flexible hoses you can find the identification number through the hose-number in the corresponding hose-list.

Pour des ordres de tuyau flexible le nombre d'identification on voit dans la liste de tuyau flexible correspondente.

Para el pedido de manguera, indicar el número de identificación de la manguera de la lista respectiva.

Para se encomendar uma mangueira, consulte o número de identificaçao na respectiva lista de mangueiras.

Для оформления заказов на шланги/рукавы идент. № может быть определен при помощи номера шланга/рукава, указанного в соответствующем перечне шлангов/рукавов.

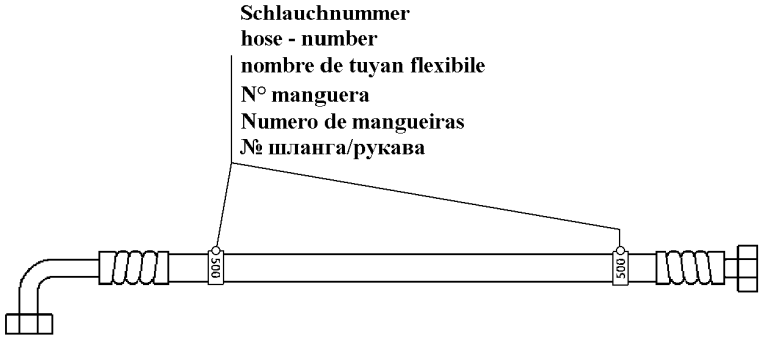

500000

Pos.	Item	Quantity	Description	Bezeichnung	Serie	K
1	10518558	1	ADHESIVE LABEL	HAFTETIKETTE		
2	10518558	5	ADHESIVE LABEL	HAFTETIKETTE		
361	995285414	1	HOSE CPL	SCHLAUCH KPL		
364	991205314	1	HOSE CPL	SCHLAUCH KPL		
367	991195514	1	HOSE CPL	SCHLAUCH KPL		
827	918849914	1	HOSE CPL	SCHLAUCH KPL		
828	929443814	1	HOSE CPL	SCHLAUCH KPL		

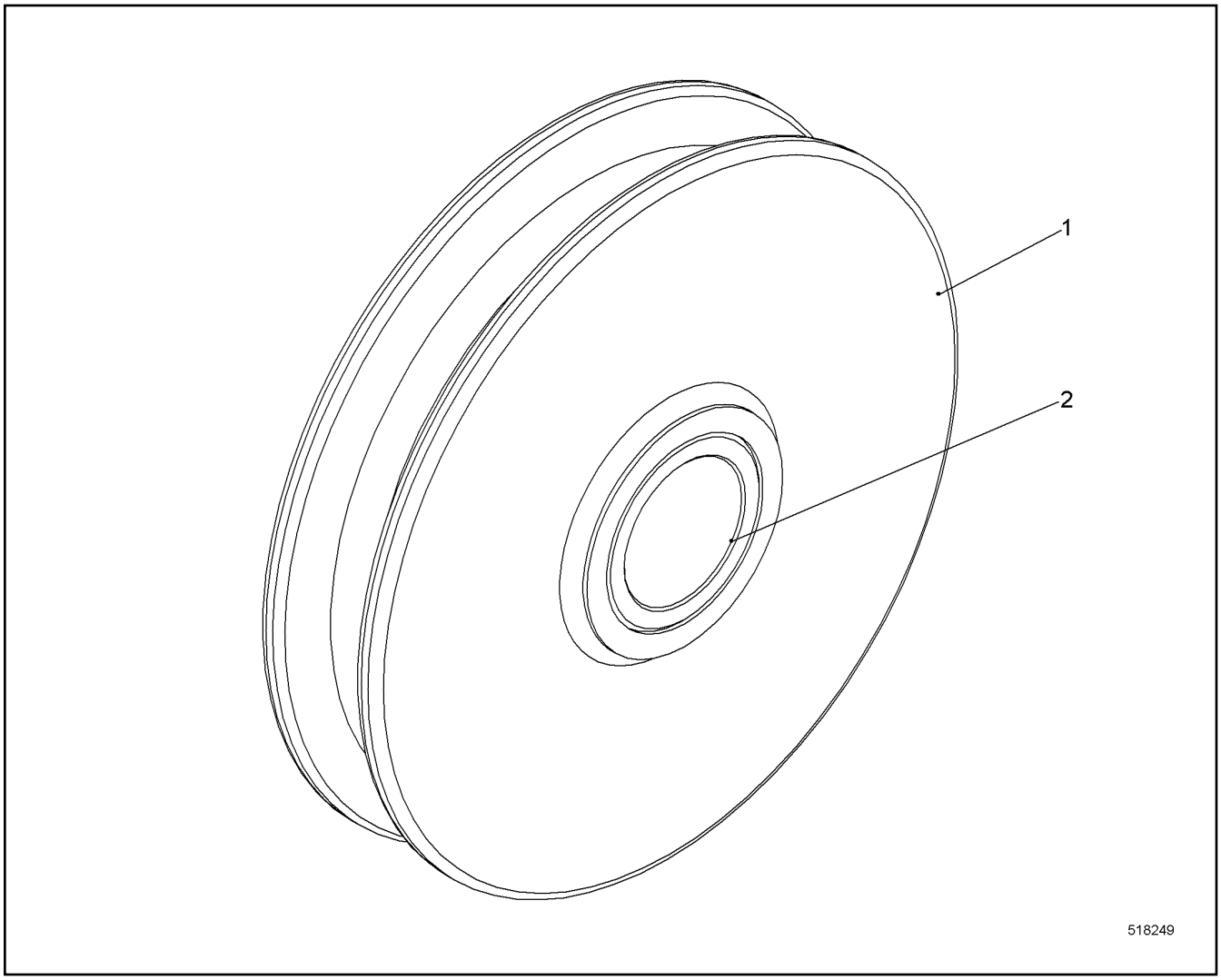

Pos.	Item	Quantity	Description	Bezeichnung	Serie	K
1	967217003	1	ROPE PULLEY	SEILROLLE		
2	967216303	1	BUSHING 30/40X38 GZ-CUSN7ZNPB	BUCHSE		

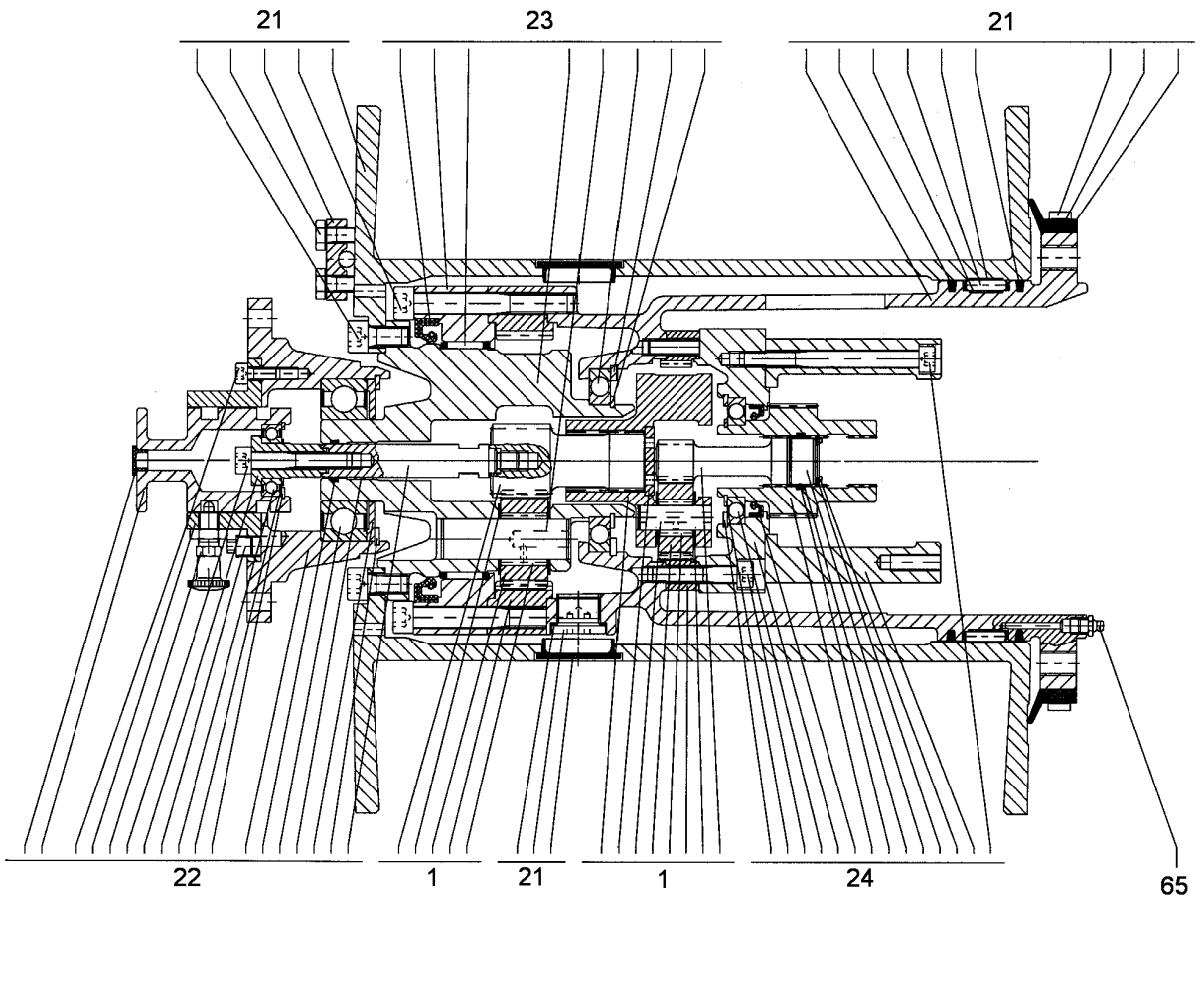

Pos.	Item	Quantity	Description	Bezeichnung	Serie	K
1	540270114	1	PLANETARY STAGE ⇨ ❑ 613	PLANETENSTUFE		
21	540270214	1	ROPE DRUM CPL ⇨ ❑ 614	SEILTROMMEL KPL		
22	540270314	1	FLANGE CPL ⇨ ❑ 615	FLANSCH KPL		
23	540270414	1	POWER TAKE-OFF CPL ⇨ ❑ 616	ABTRIEB KPL		
24	540270514	1	DRIVE UNIT CPL ⇨ ❑ 617	ANTRIEB KPL		
65	7743240	1	HYDRAULIC-TYPE LUBRICAT.NIPPLE	KEGELSCHMIERNIPPEL		

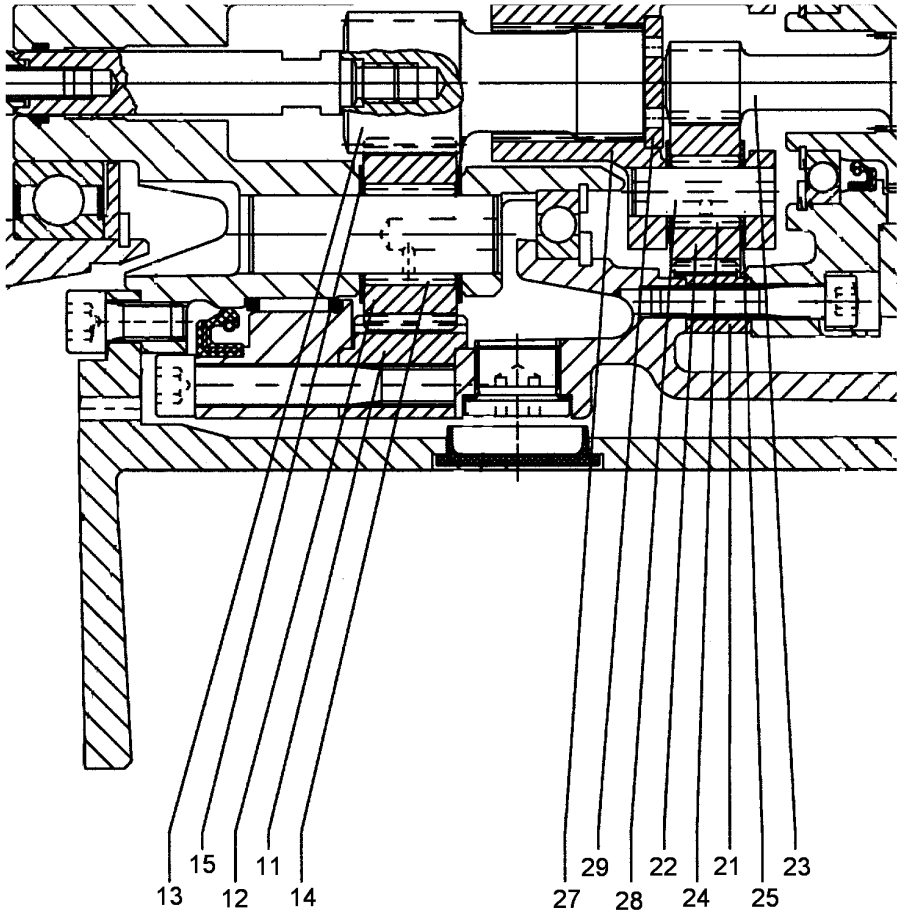

601366

Pos.	Item	Quantity	Description	Bezeichnung	Serie	K
11	512406114	1	INNER WHEEL	INNENRAD		
12	540270614	3	PLANET WHEEL	PLANETENRAD		
13	540270714	1	SUN WHEEL	SONNENRAD		
14	540244214	72	NEEDLES	NADELN		
15	540270814	6	AXIAL WASHER	AXIALSCHEIBE		
21	512406214	1	INNER WHEEL	INNENRAD		
22	540271014	3	PLANET WHEEL	PLANETENRAD		
23	540270914	1	SUN WHEEL	SONNENRAD		
24	540271114	48	NEEDLES	NADELN		
25	540271214	6	WASHER	SCHEIBE		
27	540271314	1	PLANETARY CARRIER	PLANETENTRAEGER		
28	540271414	3	PLANETARY WHEEL AXLE	PLANETENACHSE		
29	540271514	1	WASHER	SCHEIBE		

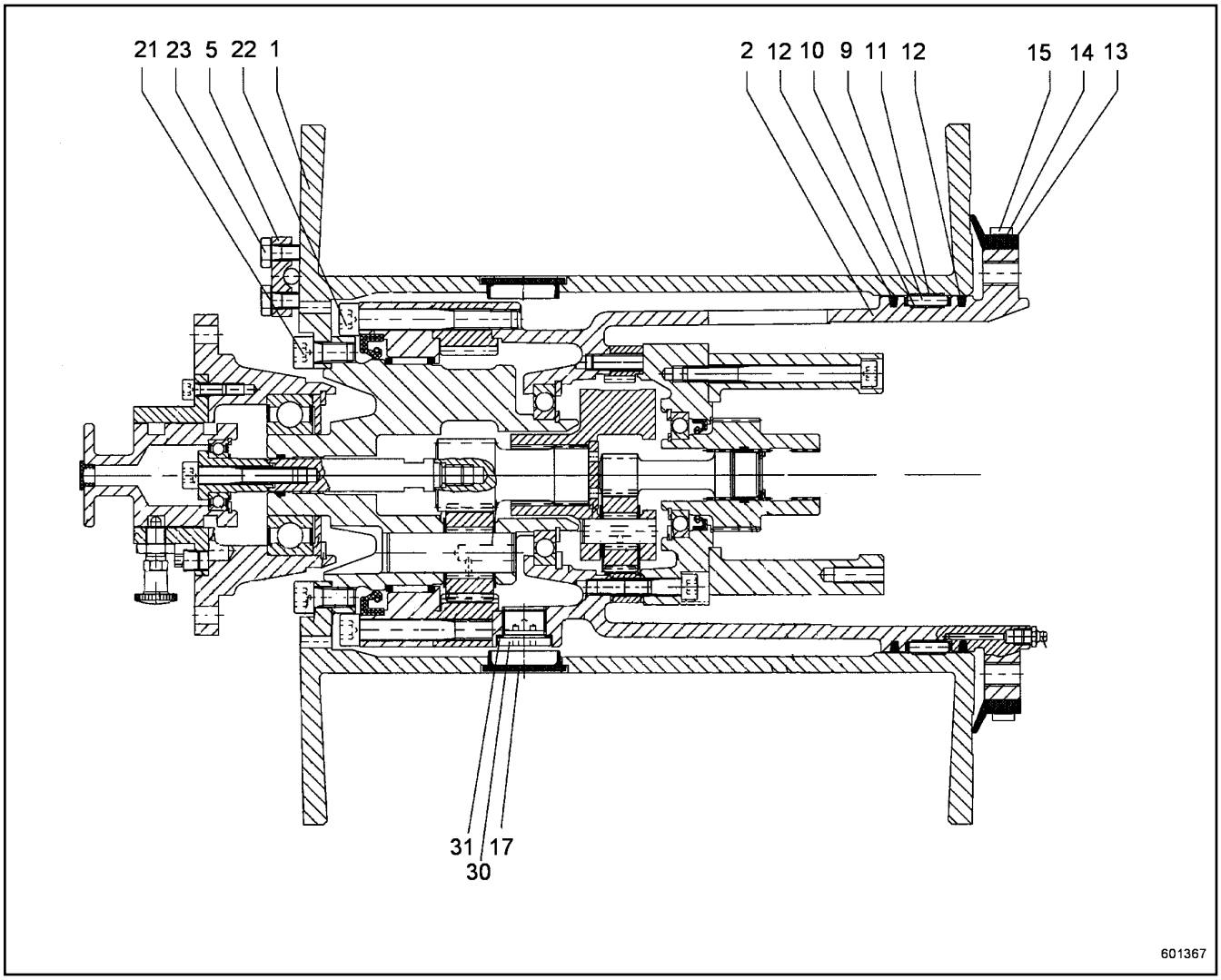

Pos.	Item	Quantity	Description	Bezeichnung	Serie	K
1	540273314	1	ROPE DRUM	SEILTROMMEL		
2	540271614	1	TERMINAL HOUSING	ENDGEHAEUSE		
5	540271714	1	ROPE CLAMP	SEILKLEMME		
9	501532014	1	FLAT CAGE BEARING	FLACHKAEFIG		
10	11278605	1	BEARING	LAGER		
12	261100714	2	FELT STRIP	FILZSTREIFEN		
13	501507014	1	PROFILE CORD	PROFILSCHNUR		
14	501507214	1	FIXING BAND	BEF BAND		
15	501507314	1	SLEEVE 8X0.4	HUELSE		
21	404208814	8	SOCKET HEAD SCREW ISO 4762 M10X20 A4-7	ZYLINDERSCHRAUBE		
22	10539508	6	SOCKET HEAD SCREW ISO 4762 M10X80 A4-7	ZYLINDERSCHRAUBE		
23	485556314	4	SOCKET HEAD SCREW ISO 4762 M8X25 A4-7	ZYLINDERSCHRAUBE		
30	404101608	2	SCREW PLUG DIN 908 M22X1.5 ST	VERSCHLUSSSCHRAUBE		
31	710104514	2	SEALING RING	DICHTRING		

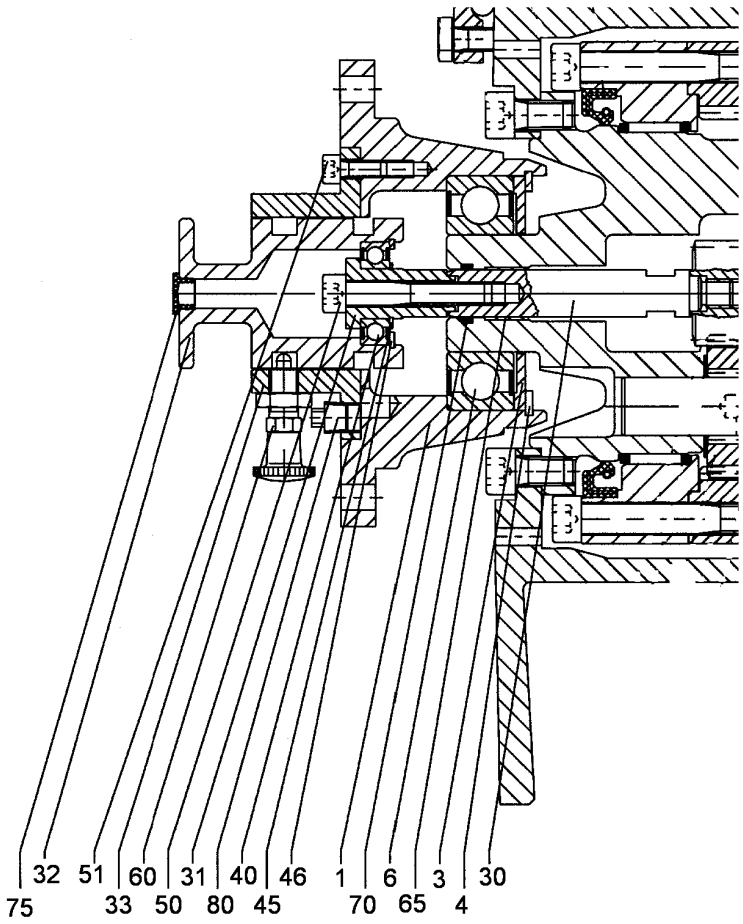

Pos.	Item	Quantity	Description	Bezeichnung	Serie	K
1	540271814	1	FLANGE	FLANSCH		
3	540271914	1	WASHER	SCHEIBE		
4	4281013	1	LOCKING RING DIN 472 80X2.5	SICHERUNGSRING		
6	745906614	1	DEEP GROOVE BALL BEARING	RILLENKUGELLAGER		
30	540272014	1	SHAFT	WELLE		
31	540272114	1	PULL ROD	ZUGSTANGE		
32	540272214	1	SWITCHING JACKET	SCHALTHUELSE		
33	540272314	1	NOTCHED SLEEVE	RASTHUELSE		
40	745128314	1	DEEP GROOVE BALL BEARING	RILLENKUGELLAGER		
45	428001014	1	LOCKING RING DIN 471 17X1	SICHERUNGSRING		
46	428100914	1	LOCKING RING DIN 472 35X1.5	SICHERUNGSRING		
50	10539486	1	SOCKET HEAD SCREW ISO 4762 M8X50 A4-7	ZYLINDERSCHRAUBE		
51	404250914	3	SOCKET HEAD SCREW ISO 4762 M6X16 A4-7	ZYLINDERSCHRAUBE		
60	540272414	1	STOP BOLT M10X1	RASTBOLZEN		
70	726469014	1	O-RING	O-RING		
80	403900101	1	SCREW PLUG DIN 906 M10X1 ST	VERSCHLUSSSCHRAUBE		

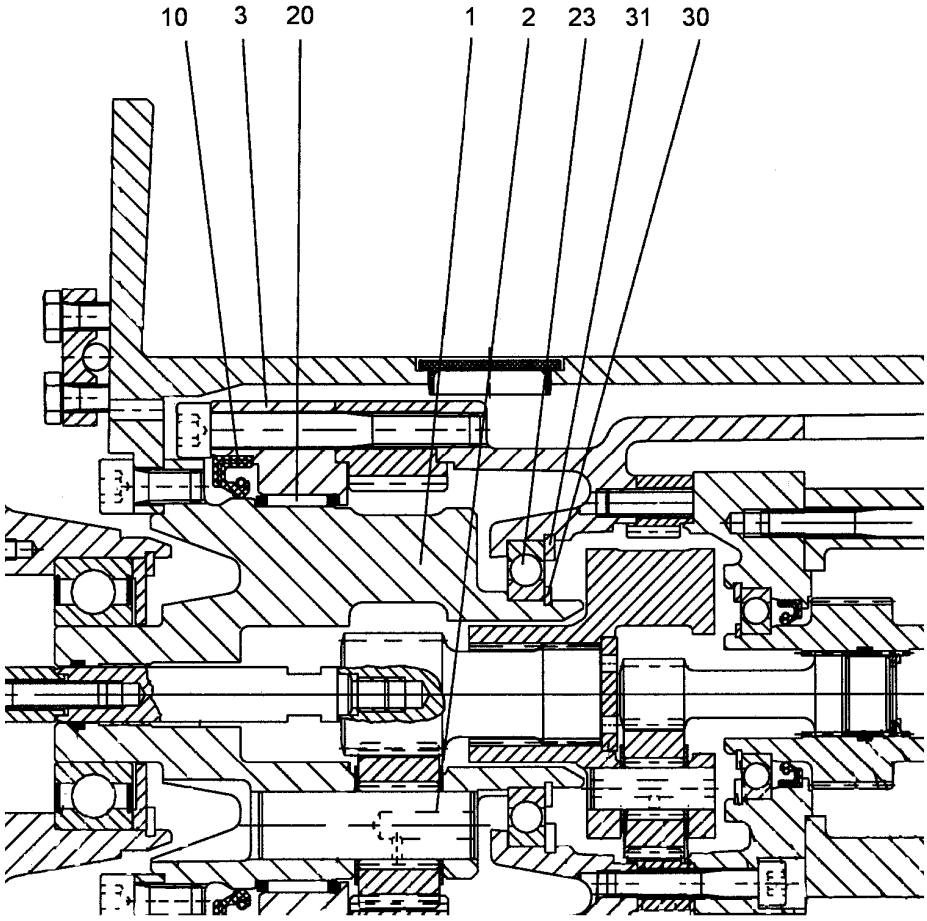

Pos.	Item	Quantity	Description	Bezeichnung	Serie	K
1	540272514	1	PLANETARY CARRIER	PLANETENTRAEGER		
2	540272614	3	PLANETARY WHEEL AXLE	PLANETENACHSE		
3	540272714	1	BEARING RING	LAGERRING		
10	710031014	1	SEALING RING	DICHTRING		
20	747462814	1	NEEDLE CAGE	NADELKAEFIG		
23	745907514	1	DEEP GROOVE BALL BEARING	RILLENKUGELLAGER		
30	428004514	1	LOCKING RING DIN 471 55X2	SICHERUNGSRING		
31	4281016	1	LOCKING RING DIN 472 90X3	SICHERUNGSRING		

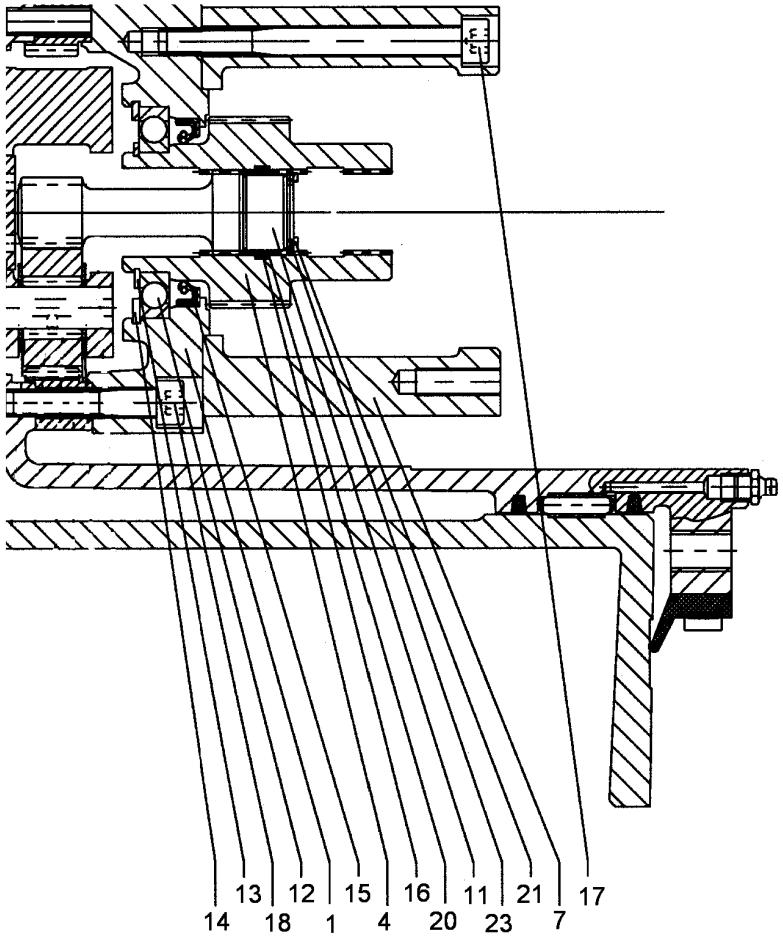

Pos.	Item	Quantity	Description	Bezeichnung	Serie	K
1	540272814	1	BRAKE FLANGE	BREMSFLANSCH		
4	540272914	1	DRIVE SLEEVE	ANTRIEBSHUELSE		
7	540273014	1	MOTOR FLANGE	MOTORFLANSCH		
11	540273114	1	WASHER	SCHEIBE		
12	745194714	1	DEEP GROOVE BALL BEARING	RILLENKUGELLAGER		
13	428002914	1	LOCKING RING DIN 471 35X1.5	SICHERUNGSRING		
14	4281037	1	LOCKING RING DIN 472 62X2	SICHERUNGSRING		
15	710020114	1	SEALING RING	DICHTRING		
16	726424214	1	O-RING	O-RING		
17	10514797	6	SOCKET HEAD SCREW ISO 4762 M8X90 A4-7	ZYLINDERSCHRAUBE		
18	10539485	6	SOCKET HEAD SCREW ISO 4762 M8X45 A4-7	ZYLINDERSCHRAUBE		
20	540273214	1	SPIRAL BACK-UP RING	SPIRALBACKRING		
21	428107714	1	LOCKING RING DIN 472 23X1.2	SICHERUNGSRING		
23	422014001	3	SHIM RING DIN 988 16X22X1 ST	PASSSCHEIBE		

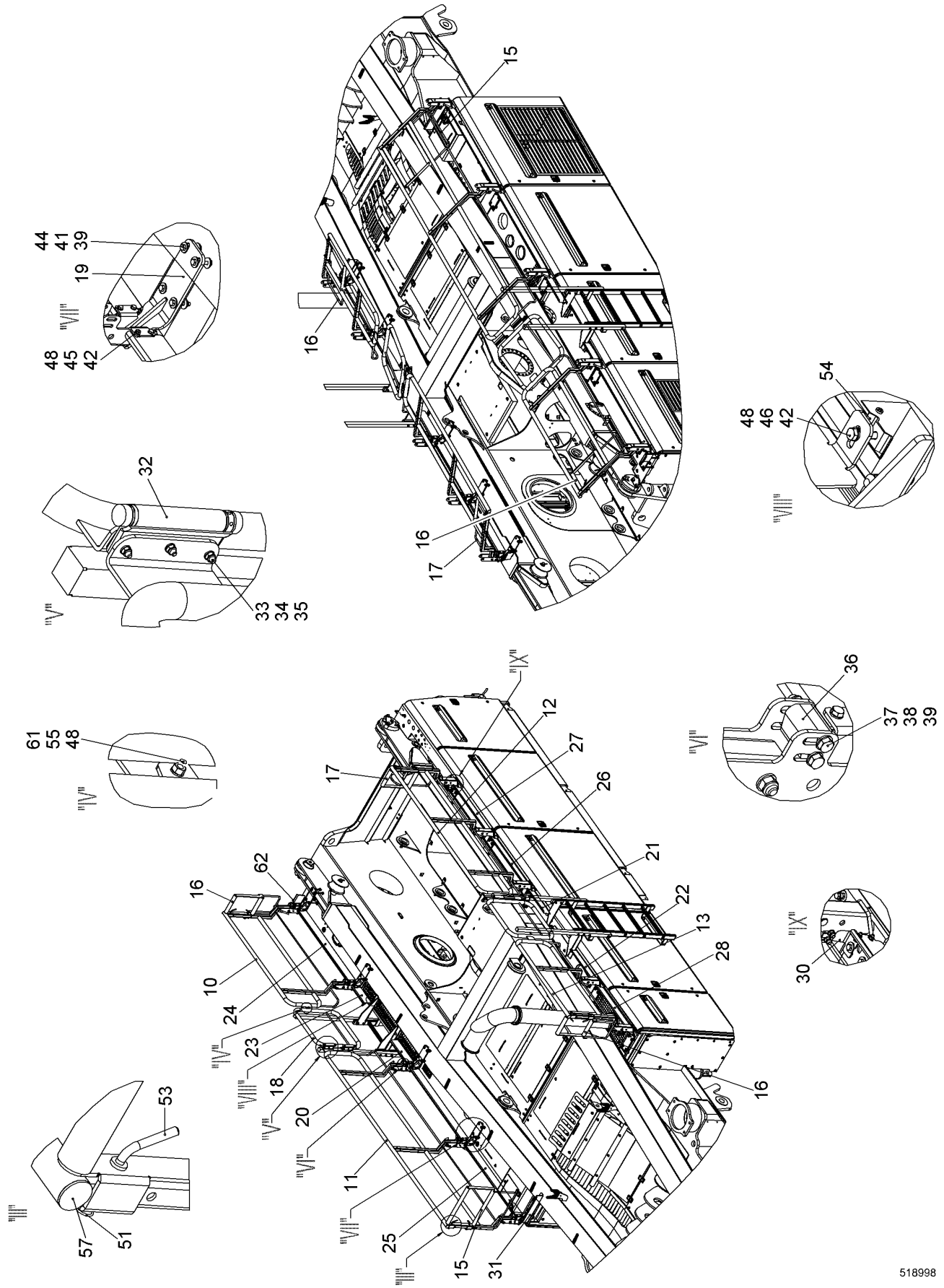

8.7.2015 518998	**138281_ETK_001**	618 (1/4)
LIEBHERR	**ROOF RAILING RFK** **DACHGELAENDER NRS**	**10 55 372 1**

Pos.	Item	Quantity	Description	Bezeichnung	Serie	K
10	10585923	1	RAILING ST.CONST.	GELAENDER SCHWK		
11	10585924	1	RAILING ST.CONST.	GELAENDER SCHWK		
12	10585925	1	RAILING ST.CONST.	GELAENDER SCHWK		
13	10585926	1	RAILING ST.CONST.	GELAENDER SCHWK		
15	10574837	1	BRACKET ST.CONST.	BUEGEL SCHWK		
16	10585933	2	BRACKET ST.CONST.	BUEGEL SCHWK		
17	10585936	1	BRACKET ST.CONST.	BUEGEL SCHWK		
18	10559163	2	RAILING ST.CONST.	GELAENDER SCHWK		
19	10349402	10	RAILING FOOT	GELAENDERFUSS		
20	10585909	1	FOOT STRIP	FUSSLEISTE		
21	10585910	1	FOOT STRIP	FUSSLEISTE		
22	10585911	1	FOOT STRIP	FUSSLEISTE		
23	10585912	1	FOOT STRIP	FUSSLEISTE		
24	10585913	2	FOOT STRIP	FUSSLEISTE		
25	10585914	1	FOOT STRIP	FUSSLEISTE		
26	10585915	1	FOOT STRIP	FUSSLEISTE		
27	10585916	1	FOOT STRIP	FUSSLEISTE		
28	10585917	1	FOOT STRIP	FUSSLEISTE		
30	10585919	1	FOOT STRIP	FUSSLEISTE		
31	10585920	1	FOOT STRIP	FUSSLEISTE		
32	10509153	4	SPIRAL SPRING HINGE PLATE	SPIRALFEDER TUERBAND		
33	408606314	24	COUNTERSUNK SCREW DIN 7991 M6X20 A4-7	SENKSCHRAUBE		

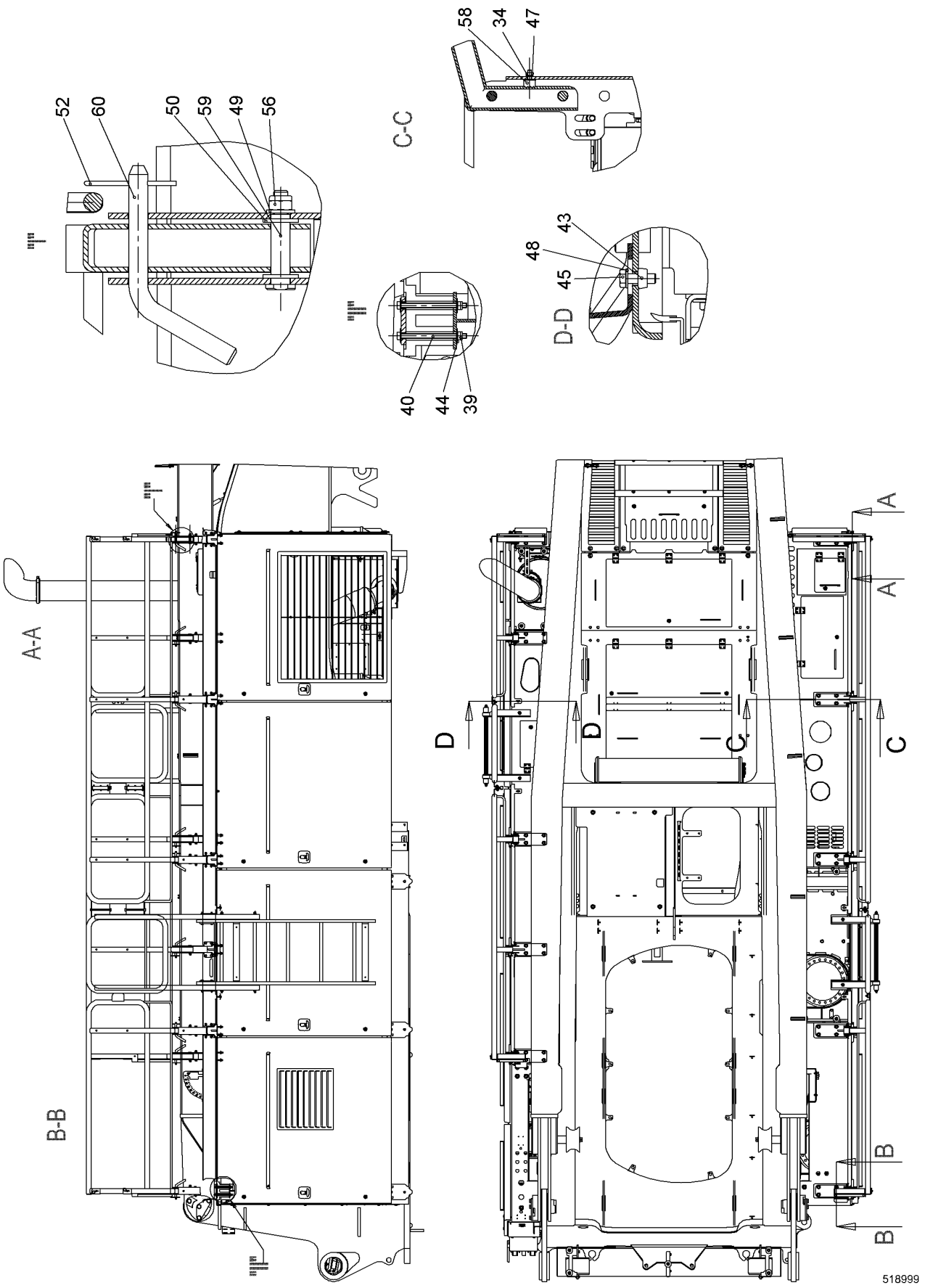

8.7.2015 518999	**138281_ETK_001**	620 (3/4)
LIEBHERR	**ROOF RAILING RFK** **DACHGELAENDER NRS**	**10 55 372 1**

Pos.	Item	Quantity	Description	Bezeichnung	Serie	K
34	420000414	34	WASHER ISO 7089 6 A4	SCHEIBE		
35	10540492	24	HEX NUT ISO 10511 M6 A4	SECHSKANTMUTTER		
37	420001114	32	WASHER ISO 7089 10 A4	SCHEIBE		
38	406527914	16	HEX SCREW ISO 4017 M10X80 A4-70	SECHSKANTSCHRAUBE		
39	10540494	54	HEX NUT ISO 10511 M10 A4	SECHSKANTMUTTER		
40	10538826	4	HEX SCREW ISO 4017 M10X140 A4-70	SECHSKANTSCHRAUBE		
41	10539959	34	HEX SCREW ISO 4017 M10X60 A4-70	SECHSKANTSCHRAUBE		
42	10540493	40	HEX NUT ISO 10511 M8 A4	SECHSKANTMUTTER		
43	485550114	2	CAGE NUT M8-RR-123-47	KAEFIGMUTTER		
44	10540511	78	WASHER ISO 7093-1 10 A4	SCHEIBE		
45	406501414	40	HEX SCREW ISO 4017 M8X25 A4-70	SECHSKANTSCHRAUBE		
46	406508014	2	HEX SCREW ISO 4017 M8X45 A4-70	SECHSKANTSCHRAUBE		
47	411517114	10	HEX NUT ISO 4032 M6 A4-70	SECHSKANTMUTTER		
48	420001014	82	WASHER ISO 7089 8 A4	SCHEIBE		
49	420001514	10	WASHER ISO 7089 12 A4	SCHEIBE		
50	420053101	20	WASHER AEHNL.ISO 7089 16 PA 6.6	SCHEIBE		
51	433206014	8	SPRING PLUG DIN 11024 2.5	FEDERSTECKER		
52	433206214	10	SPRING PLUG DIN 11024 4	FEDERSTECKER		
53	993352014	8	PLUG	STECKER		
54	725810414	2	RETAINING CLIP UPPER PART	HALTEKLAMMER OT		
55	726616208	2	RUBBER MOUNT	LAGER GUMMI		
56	10540495	10	HEX NUT ISO 10511 M12 A4	SECHSKANTMUTTER		
57	779016414	4	BLANKING PLUG	VERSCHLUSSSTOPFEN		
58	726616614	10	RUBBER MOUNT	LAGER GUMMI		
59	950387314	10	PIN	BOLZEN		
60	971230303	10	PLUG	STECKER		
61	411515014	2	HEX NUT ISO 4032 M8 A4-70	SECHSKANTMUTTER		
62	10586854	1	FOOT STRIP	FUSSLEISTE		

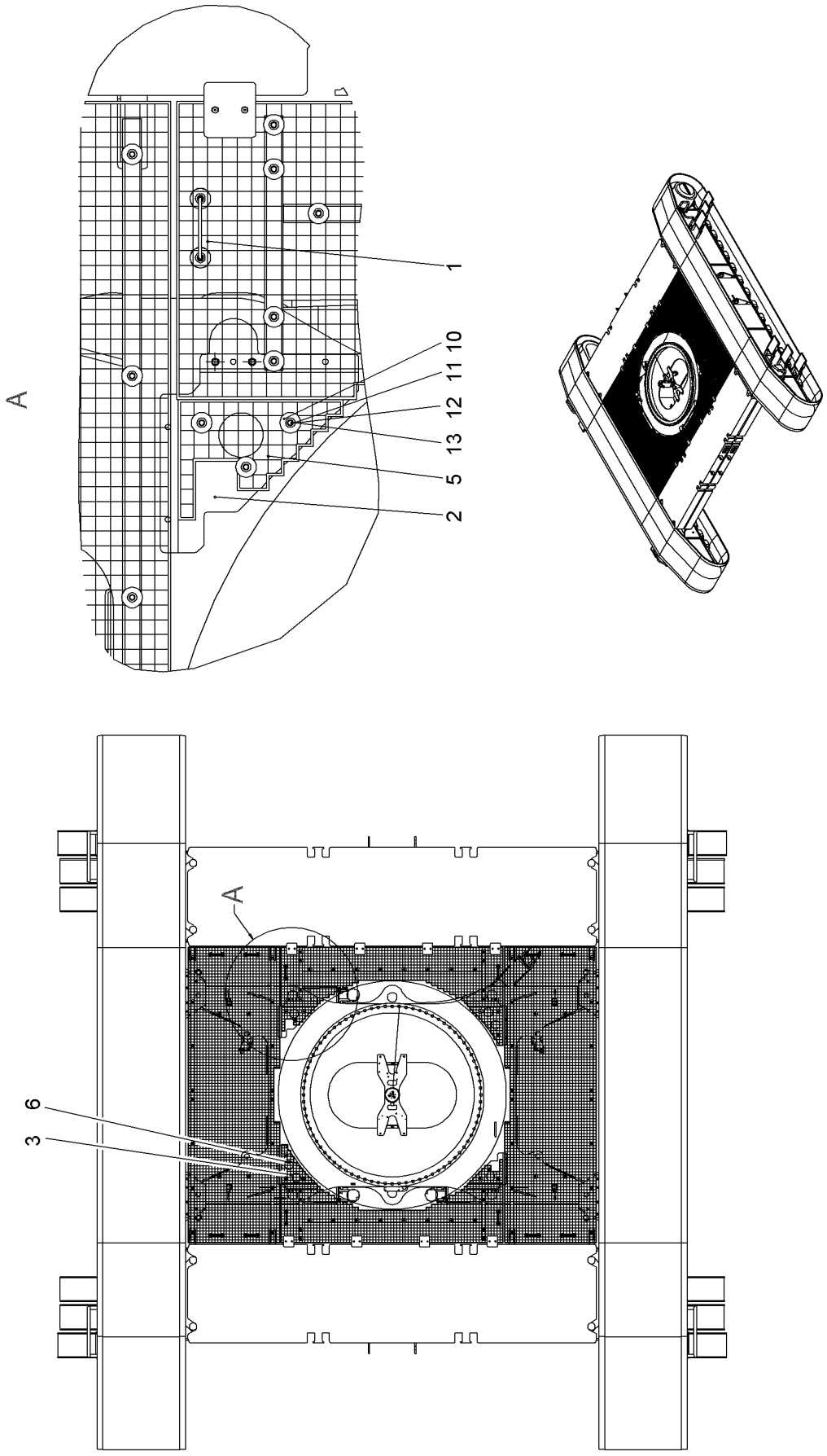
A
1
10
11
12
13
5
2
A
6
3
518402

Pos.	Item	Quantity	Description	Bezeichnung	Serie	K
1	11245755	2	PEDESTAL ⇨ ❑ 624	PODEST		
2	11245759	2	CONSOLE ST. CONST.	KONSOLE SCHWK		
3	11245922	2	CONSOLE ST. CONST.	KONSOLE SCHWK		
5	11245766	2	GRATING	GITTERROST		
6	11245767	2	GRATING	GITTERROST		
10	10098157	12	DISH	TELLER		
11	10538807	12	HEX SCREW ISO 4017 M8X50 A4-70	SECHSKANTSCHRAUBE		
12	10540493	12	HEX NUT ISO 10511 M8 A4	SECHSKANTMUTTER		
13	420001014	12	WASHER ISO 7089 8 A4	SCHEIBE		

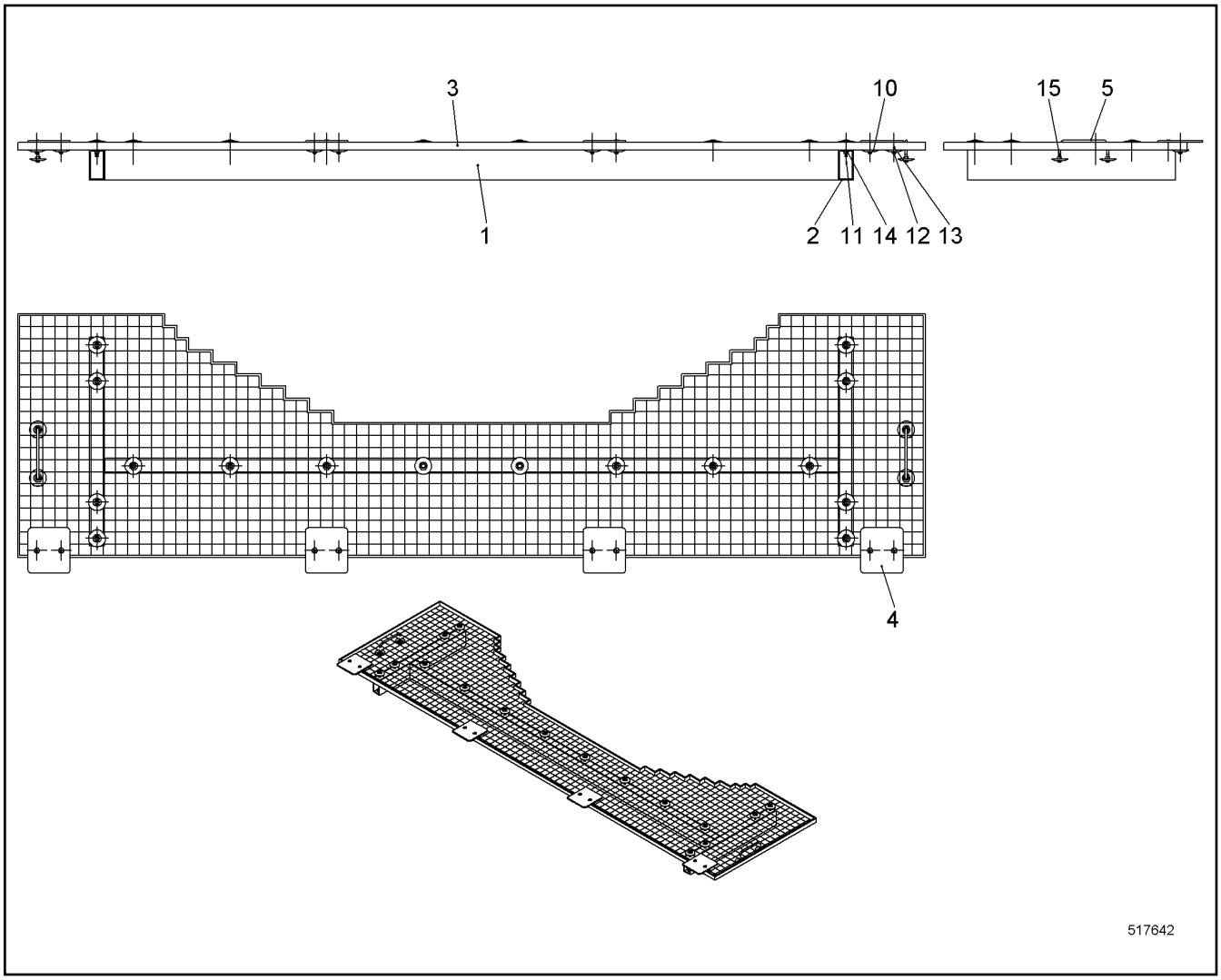

Pos.	Item	Quantity	Description	Bezeichnung	Serie	K
1	11245756	1	BRACING TUBE	TRAGROHR		
2	11245757	2	BRACING TUBE	TRAGROHR		
3	11245758	1	GRATING	GITTERROST		
4	11245760	4	WP	WP		
5	958478414	2	BRACKET	BUEGEL		
10	10098157	28	DISH	TELLER		
11	10538807	16	HEX SCREW ISO 4017 M8X50 A4-70	SECHSKANTSCHRAUBE		
12	10540493	12	HEX NUT ISO 10511 M8 A4	SECHSKANTMUTTER		
13	408601008	8	COUNTERSUNK SCREW DIN 7991 M8X45 8.8;	SENKSCHRAUBE		
14	485569314	16	HEX NUT EN 1661 M8 A2	SECHSKANTMUTTER		
15	411515014	4	HEX NUT ISO 4032 M8 A4-70	SECHSKANTMUTTER		

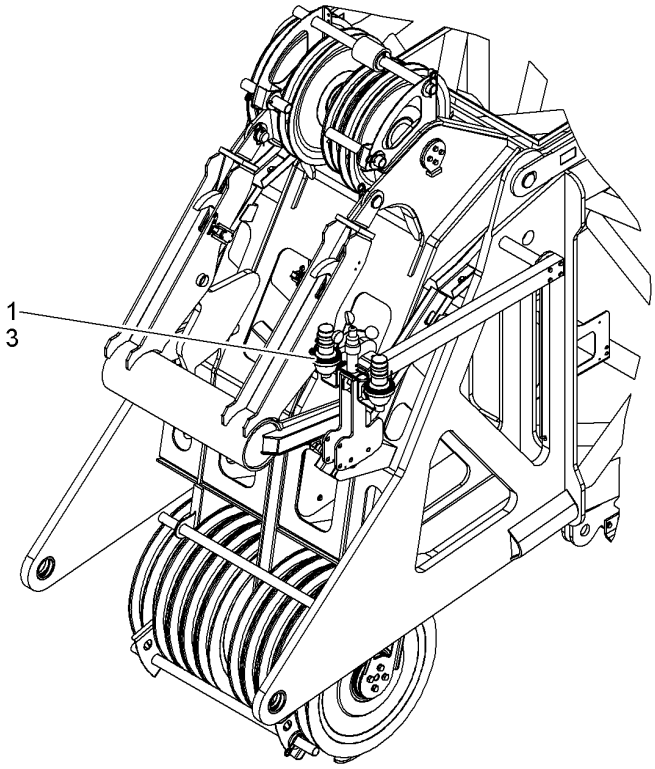

515864

Pos.	Item	Quantity	Description	Bezeichnung	Serie	K
1	11215462	1	WARNING LIGHT INSTALL RFK ⇨ ❑ 626	HELILAMPE EINBAU NRS		
3	11215298	1	WARNING LIGHT EL RFK ⇨ ❑ 627	WARNLICHT EL NRS		

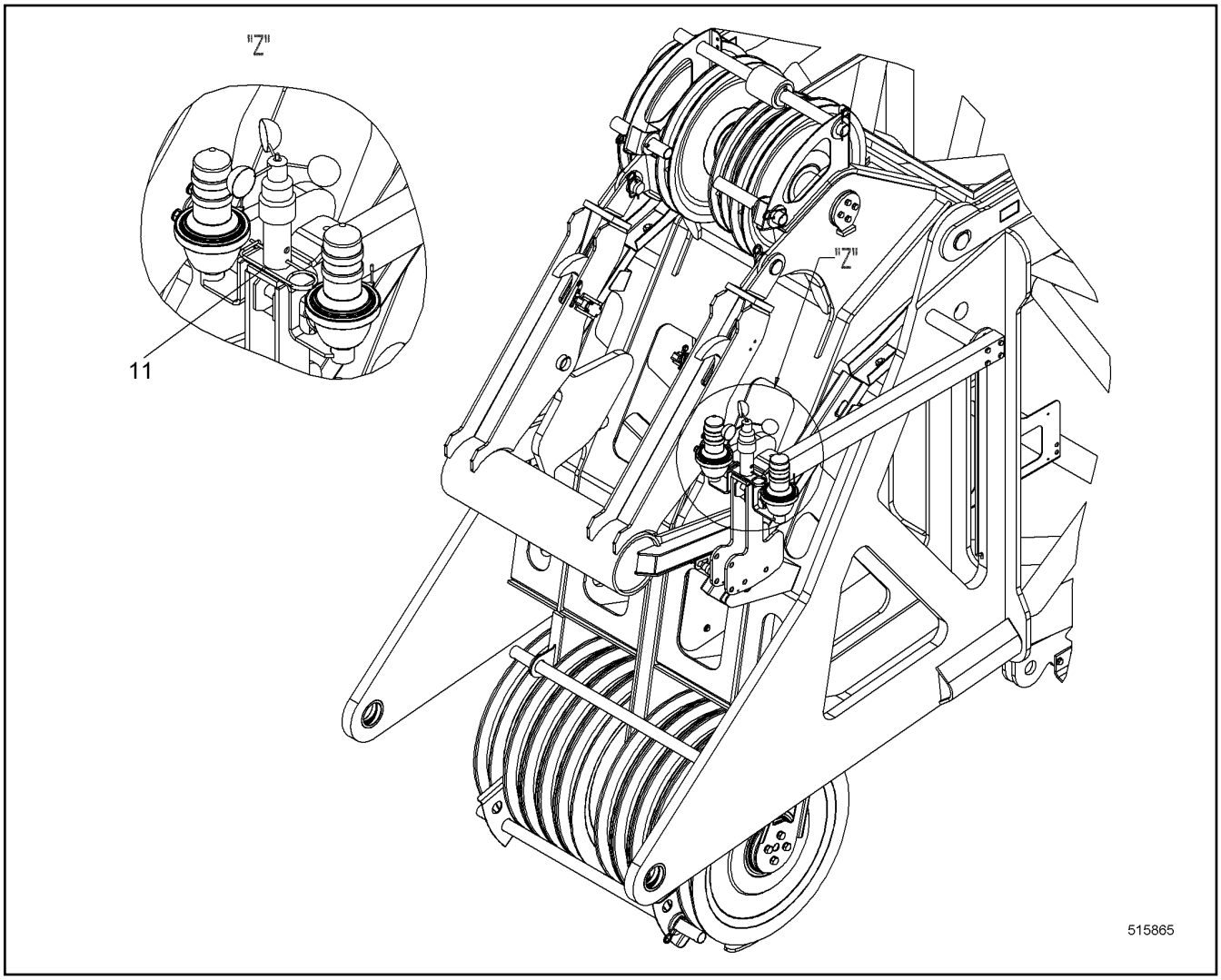

Pos.	Item	Quantity	Description	Bezeichnung	Serie	K
11	433105414	1	RETAINING SPRING 4.5 MM	SICHERUNGSFEDER		

OHNE BILD
WITHOUT ILLUSTRATION
SANS PLANCHE
SIN FIG.
SEM ILUSTRAÇÃO
БЕЗ ИЗОБРАЖЕНИЯ

600000

Pos.	Item	Quantity	Description	Bezeichnung	Serie	K
17	992497814	1	BOOM ELECTRICS ⇨ ❑ 628	AL EL		
50	11215302	1	CABIN REM. EL ⇨ ❑ 629	KABINE REST EL		

OHNE BILD
WITHOUT ILLUSTRATION
SANS PLANCHE
SIN FIG.
SEM ILUSTRAÇÃO
БЕЗ ИЗОБРАЖЕНИЯ

600000

Pos.	Item	Quantity	Description	Bezeichnung	Serie	K
10	992415314	1	HOLDER	HALTER		
31	10226144	2	OBSTRUCTION LIGHT	HINDERNISLEUCHTE		
35	10021236	2	SOCKET SHELL	TUELLENGEHAEUSE		
36	605616014	2	PLUG INSERT	STECKEREINSATZ		
37	602440101	2	CABLE GLAND	KABELVERSCHRAUBUNG		
38	602620201	2	REDUCER	REDUZIERUNG		

OHNE BILD
WITHOUT ILLUSTRATION
SANS PLANCHE
SIN FIG.
SEM ILUSTRAÇÃO
БЕЗ ИЗОБРАЖЕНИЯ

600000

Pos.	Item	Quantity	Description	Bezeichnung	Serie	K
21	10351100	1	CABLE PROTECTION SWITCH	LEITUNGSSCHUTZSCHALTER		
36	6001593	1	LUMINOUS SWITCH CONTACT SENDER	LEUCHTSCHALTKONTAKTGEBE		
37	606667214	1	ILLUMINATED BUTTON	LEUCHTTASTER		
38	260514602	1	LED LAMP	LED-LAMPE		

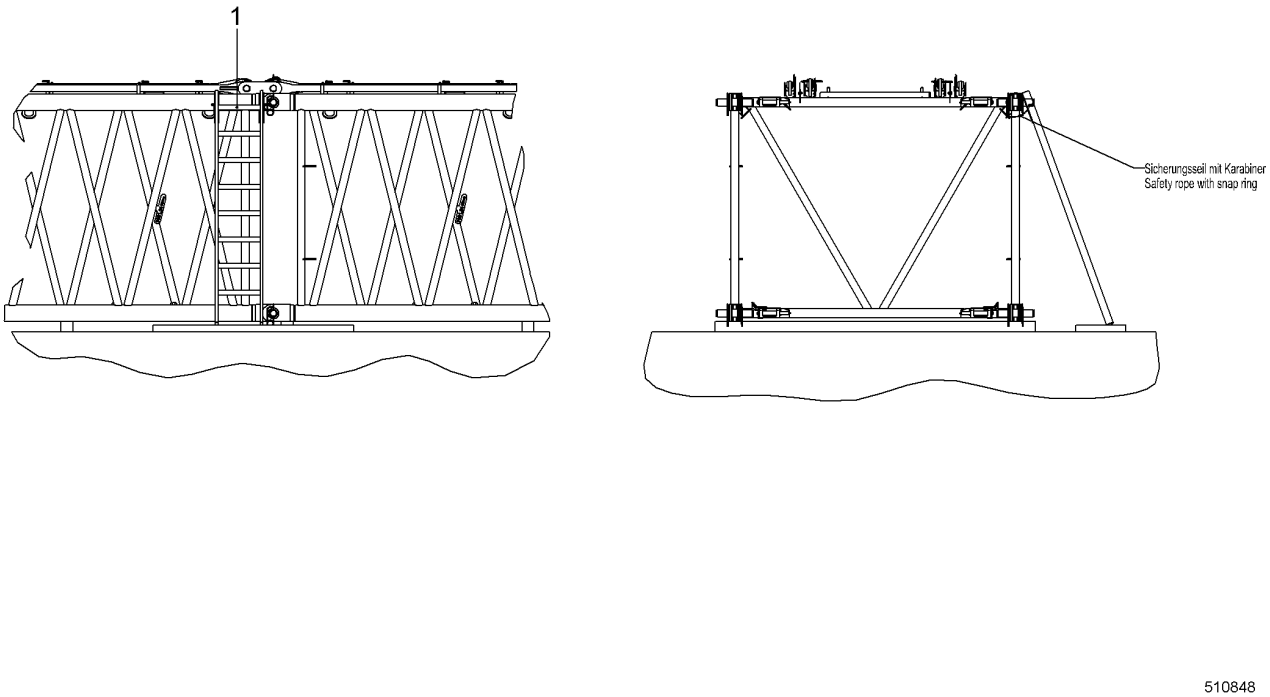

Pos.	Item	Quantity	Description	Bezeichnung	Serie	K
1	10349798	1	LADDER CPL	LEITER KPL		

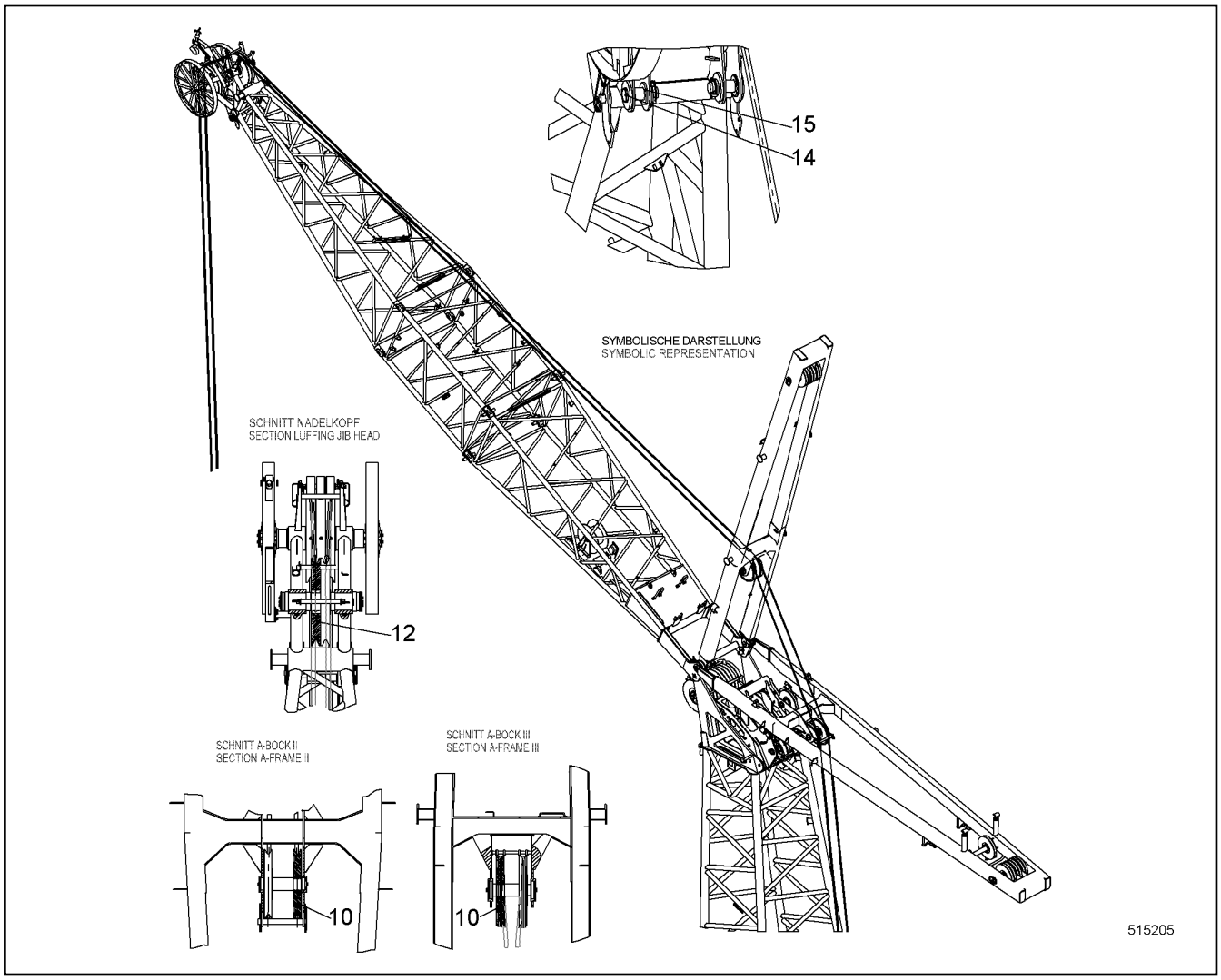

Pos.	Item	Quantity	Description	Bezeichnung	Serie	K
10	919279914	2	ROPE PULLEY CPL	SEILROLLE KPL		
11		-2	BUSHING 90.5/101.6X67 LHR355-20;10019728	BUCHSE		
12	790202014	1	ROPE PULLEY CPL	SEILROLLE KPL		
13		-2	BUSHING 141/152.4X40 S355J2H;EN 10210-1	BUCHSE		
14	910362714	1	BOLT CONNECTION	BOLZENVERBINDUNG		
15	420004001	2	WASHER ISO 7089 48	SCHEIBE		

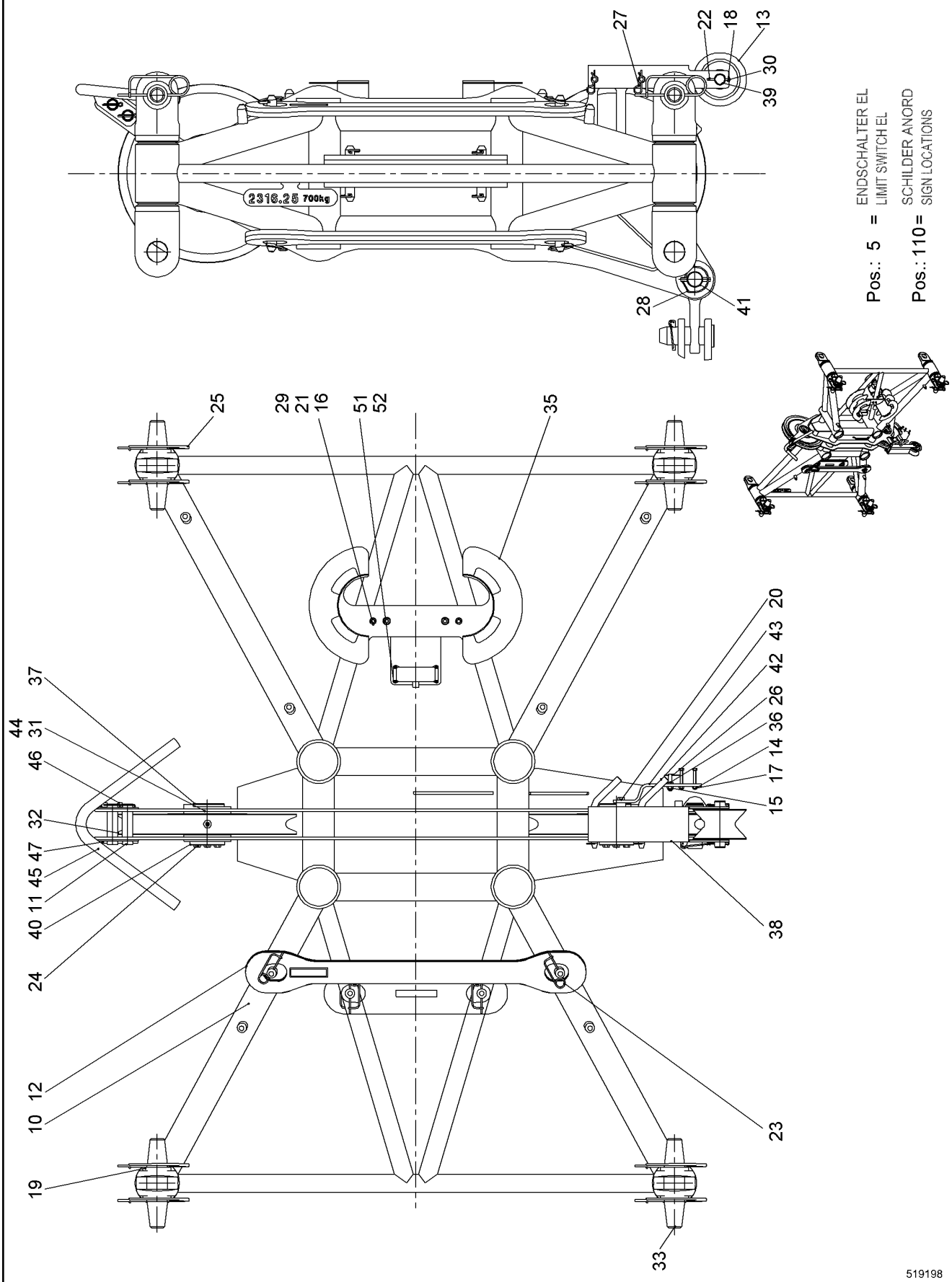
2316.25 700kg
Pos.: 5 = ENDSCHALTER EL
LIMIT SWITCH EL
Pos.: 110 = SCHILDER ANORD
SIGN LOCATIONS
519198

Pos.	Item	Quantity	Description	Bezeichnung	Serie	K
5	10511671	1	LIMIT SWITCH EL ⇨ ❑ 634	ENDSCHALTER EL		
10	993118114	1	NEEDLE BOOM ST. CONST.	ZWISCHENHUB NADEL AL SCHW		
11	957104414	2	TUBE	ROHR		
12	10348662	4	COUPLING LINK	KOPPELLASCHE		
13	289058014	1	ROLLER	ROLLE		
14	10538808	2	HEX SCREW ISO 4017 M8X60 A4-70	SECHSKANTSCHRAUBE		
15	10540494	1	HEX NUT ISO 10511 M10 A4	SECHSKANTMUTTER		
16	10540495	4	HEX NUT ISO 10511 M12 A4	SECHSKANTMUTTER		
17	10540493	2	HEX NUT ISO 10511 M8 A4	SECHSKANTMUTTER		
18	421102814	2	WASHER DIN EN 28738 35 ST;	SCHEIBE		
19	421103614	8	WASHER DIN EN 28738 65 ST;	SCHEIBE		
20	425221314	2	SERRATED LOCK WASHER DIN 6798 13	FAECHERSCHEIBE		
21	425225414	8	SERRATED LOCK WASHER DIN 6798 13 A4	FAECHERSCHEIBE		
22	433007814	2	SPLIT PIN ISO 1234 6.3X50 A4	SPLINT		
23	433101208	8	RETAINING SPRING 4MM	SICHERUNGSFEDER		
24	406517914	8	HEX SCREW ISO 4017 M12X25 A4-70	SECHSKANTSCHRAUBE		
25	433105008	8	RETAINING SPRING DIN 2194 6MM FS	SICHERUNGSFEDER		
26	433206014	1	SPRING PLUG DIN 11024 2.5	FEDERSTECKER		
27	433206214	2	SPRING PLUG DIN 11024 4	FEDERSTECKER		
28	485544014	1	SAFETY PLUG W HINGE-LID 12X75	SICHERHEITSKLAPPSTECKER		
29	406517314	6	HEX SCREW ISO 4017 M12X30 A4-70	SECHSKANTSCHRAUBE		
30	745120514	2	DEEP GROOVE BALL BEARING	RILLENKUGELLAGER		
31	779013014	2	PROTECTING CAP	SCHUTZKAPPE		
32	919279914	2	ROPE PULLEY CPL	SEILROLLE KPL		
33	949886314	4	PIN 65X284 LHRD900-40;10019758	BOLZEN		
35	953431703	1	CABLE HOLDER RFK ⇨ ❑ 635	KABELHALTER NRS		
36	956247414	1	PIN RD20X54 ST 37 K	BOLZEN		
37	956536214	2	PIN	BOLZEN		
38	957104314	1	WP	WP		
39	957104814	1	PIN	BOLZEN		
41	957261514	1	PIN 58X140 LHRD900-40;10019758	BOLZEN		
42	970535203	2	PLUG	STECKER		
43	971508203	1	WP	WP		
44	774301614	2	HYDRAULIC-TYPE LUBRICAT.NIPPLE	KEGELSCHMIERNIPPEL		
45	993584114	1	SLACK ROPE PROTECTION	SCHLAPPSEILSICHERUNG		
46	433200208	2	HINGED CONNECTOR DIN 11023 6X42	KLAPPSTECKER		
47	433007714	2	SPLIT PIN ISO 1234 6.3X45 A4	SPLINT		
50	406501914	4	HEX SCREW ISO 4017 M5X16 A4-70	SECHSKANTSCHRAUBE		
51	425225614	4	SERRATED LOCK WASHER DIN 6798 5.3 A4	FAECHERSCHEIBE		
52	10540484	4	HEX NUT ISO 10511 M5 A4	SECHSKANTMUTTER		
110	11269906	1	SIGN LOCATIONS	SCHILDER ANORD		

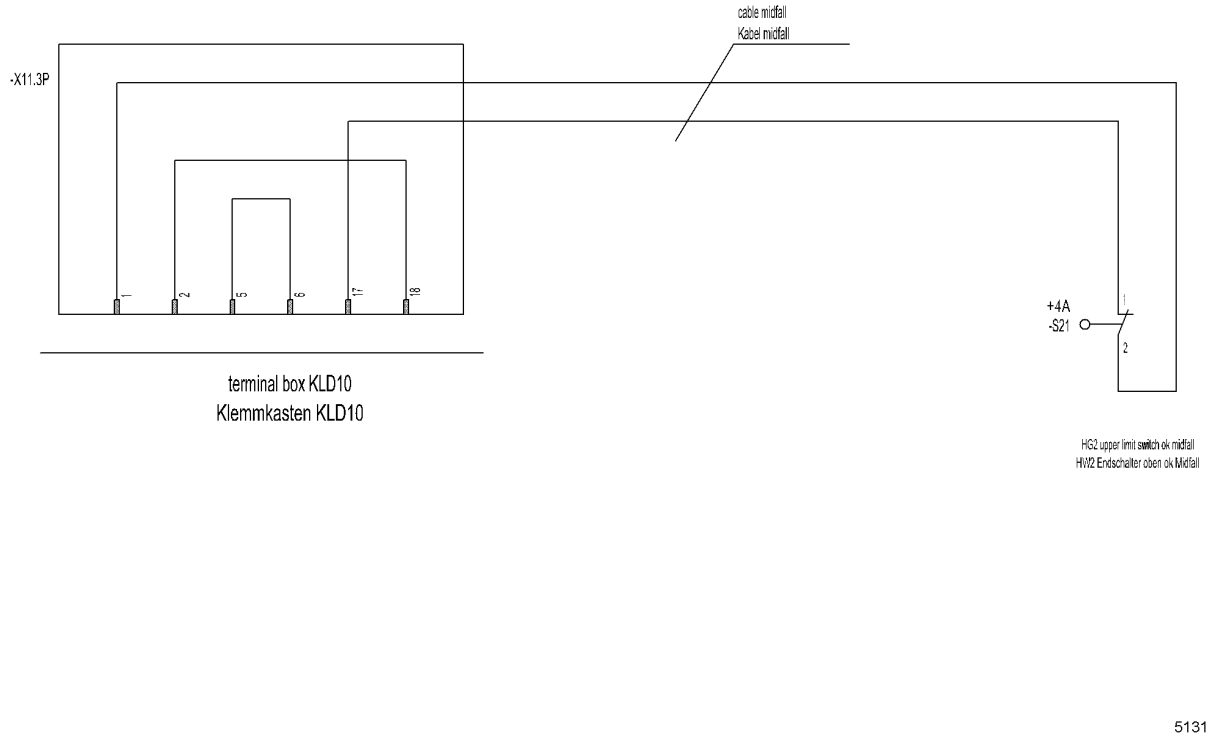

Pos.	Item	Quantity	Description	Bezeichnung	Serie	K
30	693155014	1	SOCKET SHELL	TUELLENGEHAEUSE		
31	605604714	1	MALE INSERT	STIFTEINSATZ		
32	605601701	8	CONTACT PIN	KONTAKTSTIFT		
33	260493402	1	REDUCER	REDUZIERUNG		
34	10045155	1	CABLE GLAND	KABELVERSCHRAUBUNG		
35	600454314	60	CONTROL LEAD	STEUERLEITUNG		
36	927521808	1	LIMIT SWITCH HOISTING ABOVE ⇨ ❑ 567	ENDSCHALTER HUB OBEN		
50	693157114	1	BS HOUSING	SOCKELGEHAEUSE		
51	605609514	1	FEMALE INSERT	BUCHSENEINSATZ		
52	693061514	2	STOPPER PLUG	BLINDSTOPFEN		

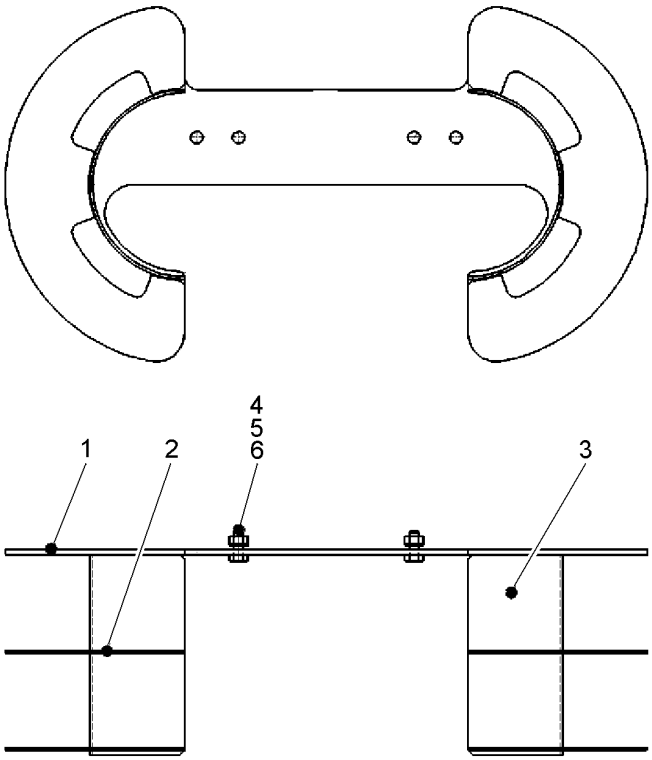

Pos.	Item	Quantity	Description	Bezeichnung	Serie	K
1	953432003	1	WP	WP		
2	953431903	4	WP	WP		
3	953431803	2	WP	WP		
4	406511914	2	HEX SCREW ISO 4017 M10X25 A4-70	SECHSKANTSCHRAUBE		
5	4000383	2	HEX NUT ISO 4032 M10 10	SECHSKANTMUTTER		
6	460000903	2	CIRCLIP DIN 128 10	FEDERRING		

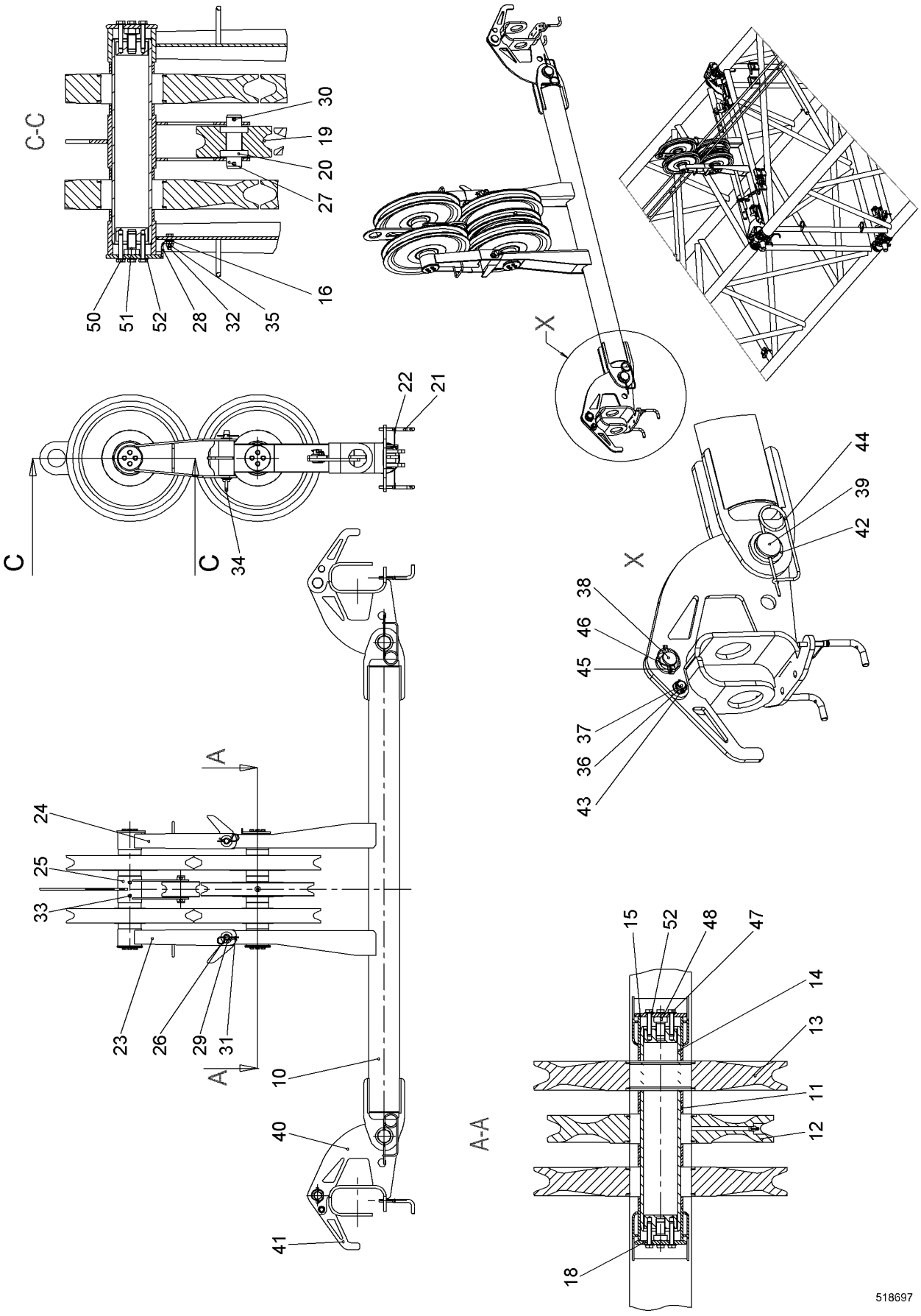
C-C
30
19
20
27
16
50
51
52
28
32
35
X
22
21
C
C
34
44
39
42
X
38
46
45
37
36
43
A
24
25
33
23
26
29
31
A
10
40
41
A-A
15
52
48
47
14
13
11
12
18
518697

Pos.	Item	Quantity	Description	Bezeichnung	Serie	K
10	991011714	1	ROPE GUIDE WELD.CONST.	SEILFUEHRUNG SCHWK		
11	949740614	10	BUSHING 90.5/101.6X26 LHR355-20;10019728	BUCHSE		
12	915523714	1	ROPE PULLEY CPL	SEILROLLE KPL		
13	914941914	4	ROPE PULLEY CPL ⇨ ❑ 638	SEILROLLE KPL		
14	970901603	2	AXLE ST.CONST.	ACHSE SCHWK		
16	420001114	6	WASHER ISO 7089 10 A4	SCHEIBE		
19	970961303	1	ROLLER	ROLLE		
20	745120514	2	DEEP GROOVE BALL BEARING	RILLENKUGELLAGER		
21	956049414	4	TOGGLE	KNEBEL		
22	773400314	2	STEEL WIRE ROPE	STAHLDRAHTSEIL		
23	919014814	1	OUTRIGGER	ABSTUETZUNG		
24	919017314	1	OUTRIGGER	ABSTUETZUNG		
25	919022714	1	ROLLER CARRIER	ROLLENTRAEGER		
26	942594714	2	PIN EN 10060 28X220X192 X20CR13+QT;EN 1	BOLZEN		
27	953305103	1	PIN 35X 120 LHRD750-30;10019758	BOLZEN		
28	971323803	1	WP	WP		
29	420002601	4	WASHER ISO 7089 27	SCHEIBE		
30	433009014	2	SPLIT PIN ISO 1234 8X56 A4	SPLINT		
31	433206314	2	SPRING PLUG DIN 11024 5	FEDERSTECKER		
32	406501314	2	HEX SCREW ISO 4017 M8X30 A4-70	SECHSKANTSCHRAUBE		
33	10538806	2	HEX SCREW ISO 4017 M8X10 A4-70	SECHSKANTSCHRAUBE		
34	402600314	2	RING BOLT DIN 580 M12 C15E;EN 10084	RINGSCHRAUBE		
35	10540493	2	HEX NUT ISO 10511 M8 A4	SECHSKANTMUTTER		
36	421101714	2	WASHER DIN EN 28738 20 ST;	SCHEIBE		
37	945877814	2	PIN 30X46 LHRD750-30;10019758	BOLZEN		
38	485568414	2	PIN 48X58 LHRD900-40;10019758	BOLZEN		
39	948545514	2	PIN 68X105 LHRD750-30;10019758	BOLZEN		
40	991011914	2	FORK ST.CONST.	GABEL SCHWK		
41	991012214	2	FORK ST.CONST.	GABEL SCHWK		
42	421103514	2	WASHER DIN EN 28738 60 ST;	SCHEIBE		
43	485565814	2	SAFETY PLUG W HINGE-LID 4X27	SICHERHEITSKLAPPSTECKER		
44	433105008	2	RETAINING SPRING DIN 2194 6MM FS	SICHERUNGSFEDER		
45	10098106	2	SAFETY PLUG W HINGE-LID 10X55	SICHERHEITSKLAPPSTECKER		
46	421102914	2	WASHER DIN EN 28738 36 ST;	SCHEIBE		
47	406518614	8	HEX SCREW ISO 4017 M10X50 A4-70	SECHSKANTSCHRAUBE		
48	10543918	2	HEX SCREW ISO 4017 M20X30 10.9	SECHSKANTSCHRAUBE		
50	10538822	8	HEX SCREW ISO 4017 M10X55 A4-70	SECHSKANTSCHRAUBE		
51	10543919	2	HEX SCREW ISO 4017 M20X35 10.9	SECHSKANTSCHRAUBE		
52	10536580	16	LOCK WASHER 10 254 SMO;EN 10088-3	SICHERUNGSSCHEIBE		

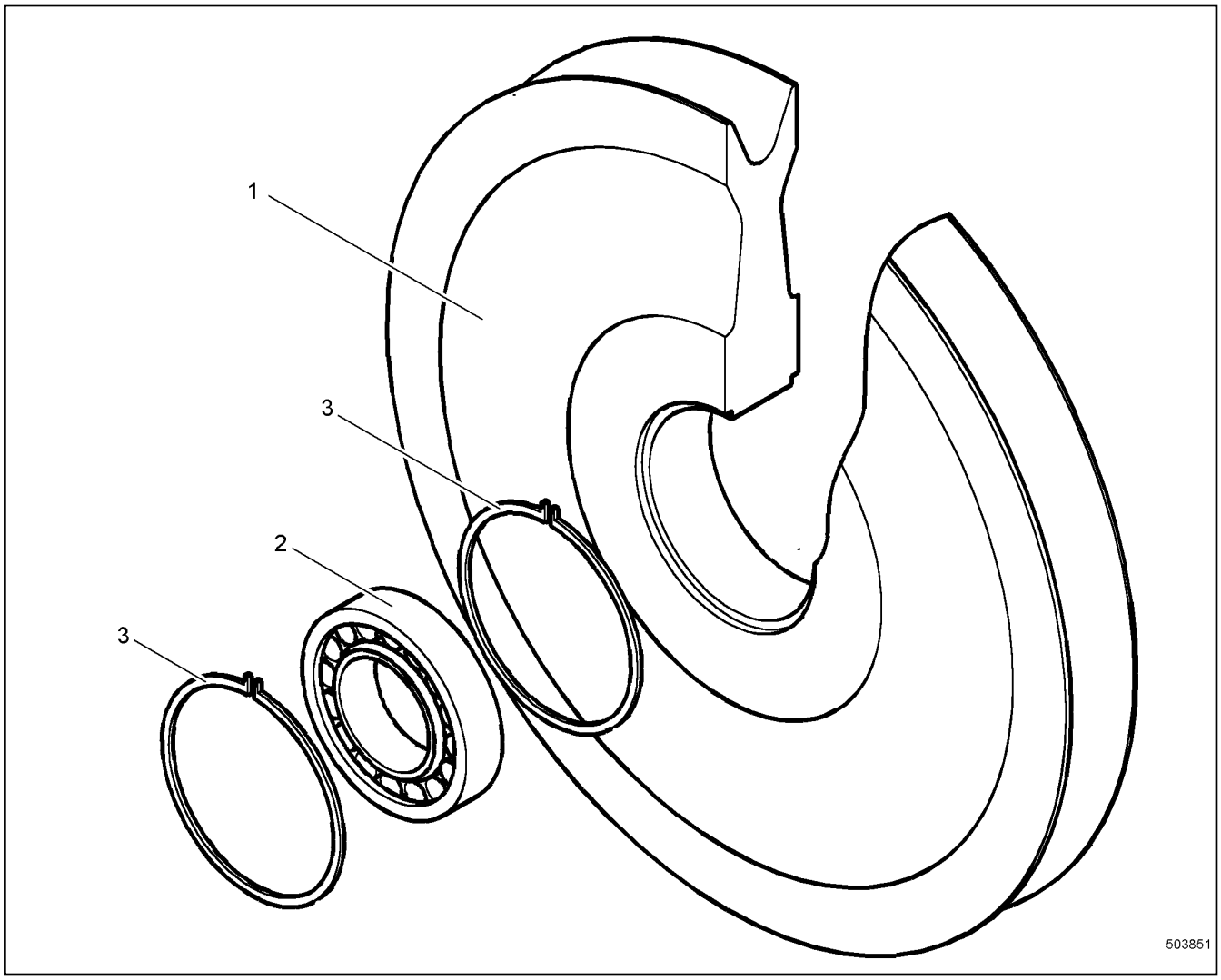

Pos.	Item	Quantity	Description	Bezeichnung	Serie	K
1	947037314	1	ROPE PULLEY	SEILROLLE		
2	746509414	1	CYL ROLLER BEARING	ZYL ROLLENLAGER		
3	747460514	2	SNAP RING 140	SPRENGRING		

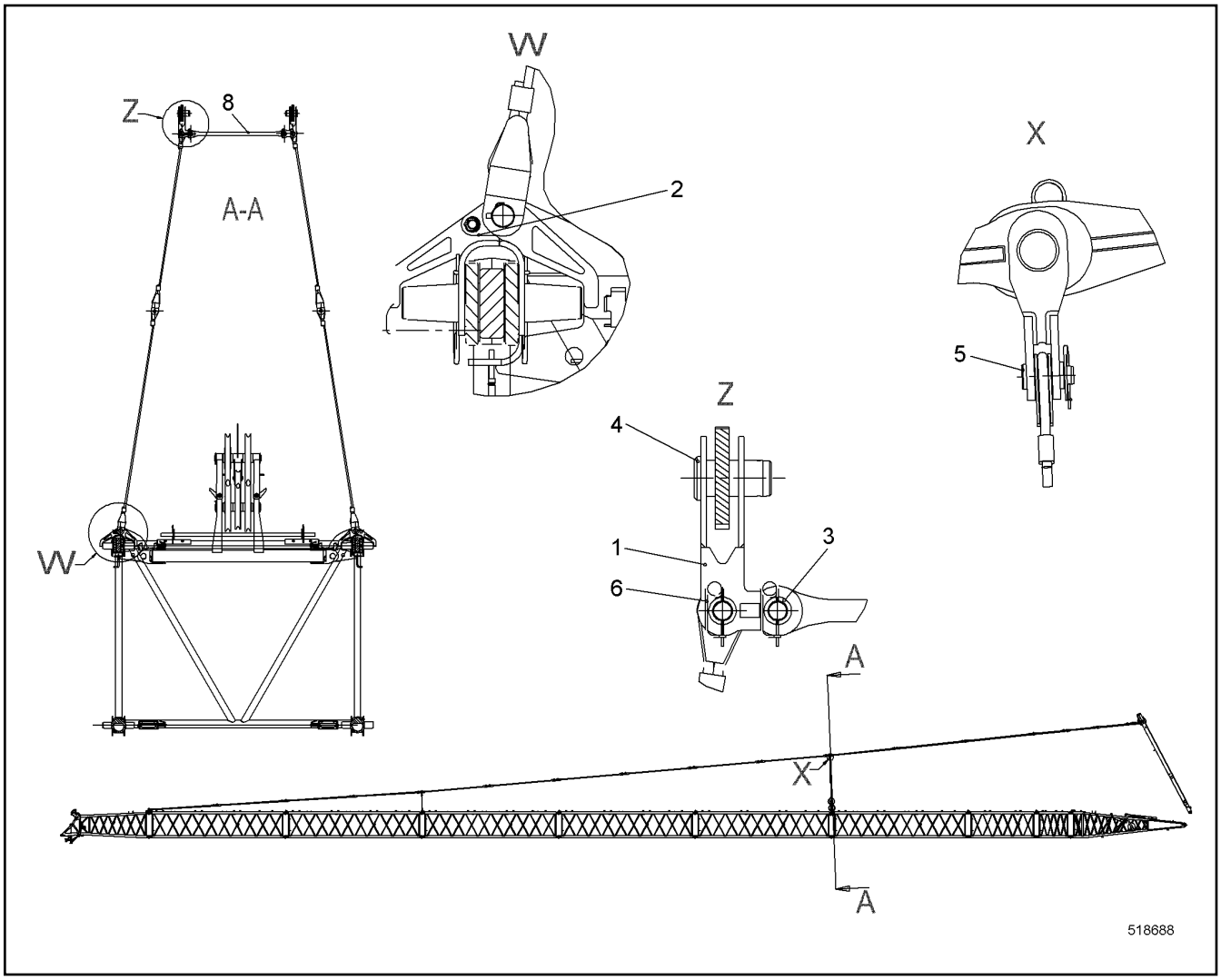

Pos.	Item	Quantity	Description	Bezeichnung	Serie	K
1	993034714	4	FORK	GABEL		
2	991012514	4	FORK ⇨ ❑ 640	GABEL		
3	421102914	12	WASHER DIN EN 28738 36 ST;	SCHEIBE		
4	956859714	4	PIN	BOLZEN		
5	453050914	12	PIN DIN 1435-B 35H11X90X80 S355J2;EN 1002	BOLZEN		
6	433101208	12	RETAINING SPRING 4MM	SICHERUNGSFEDER		
8	919421714	2	ROD	STANGE		

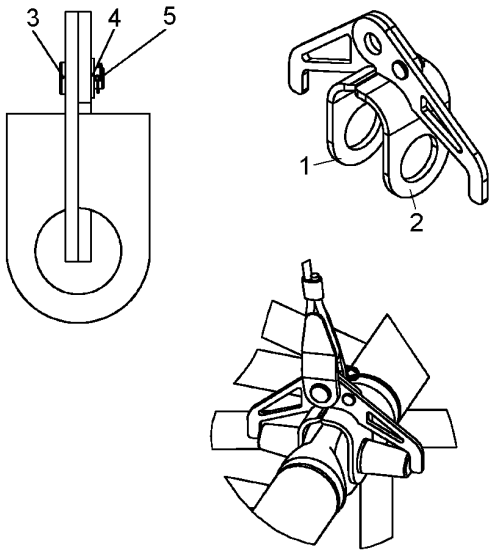

507796

Pos.	Item	Quantity	Description	Bezeichnung	Serie	K
1	991012614	1	FORK ST.CONST.	GABEL SCHWK		
2	991012214	1	FORK ST.CONST.	GABEL SCHWK		
3	945877814	1	PIN 30X46 LHRD750-30;10019758	BOLZEN		
4	10544174	1	WASHER ISO 7089 20	SCHEIBE		
5	485565814	1	SAFETY PLUG W HINGE-LID 4X27	SICHERHEITSKLAPPSTECKER		

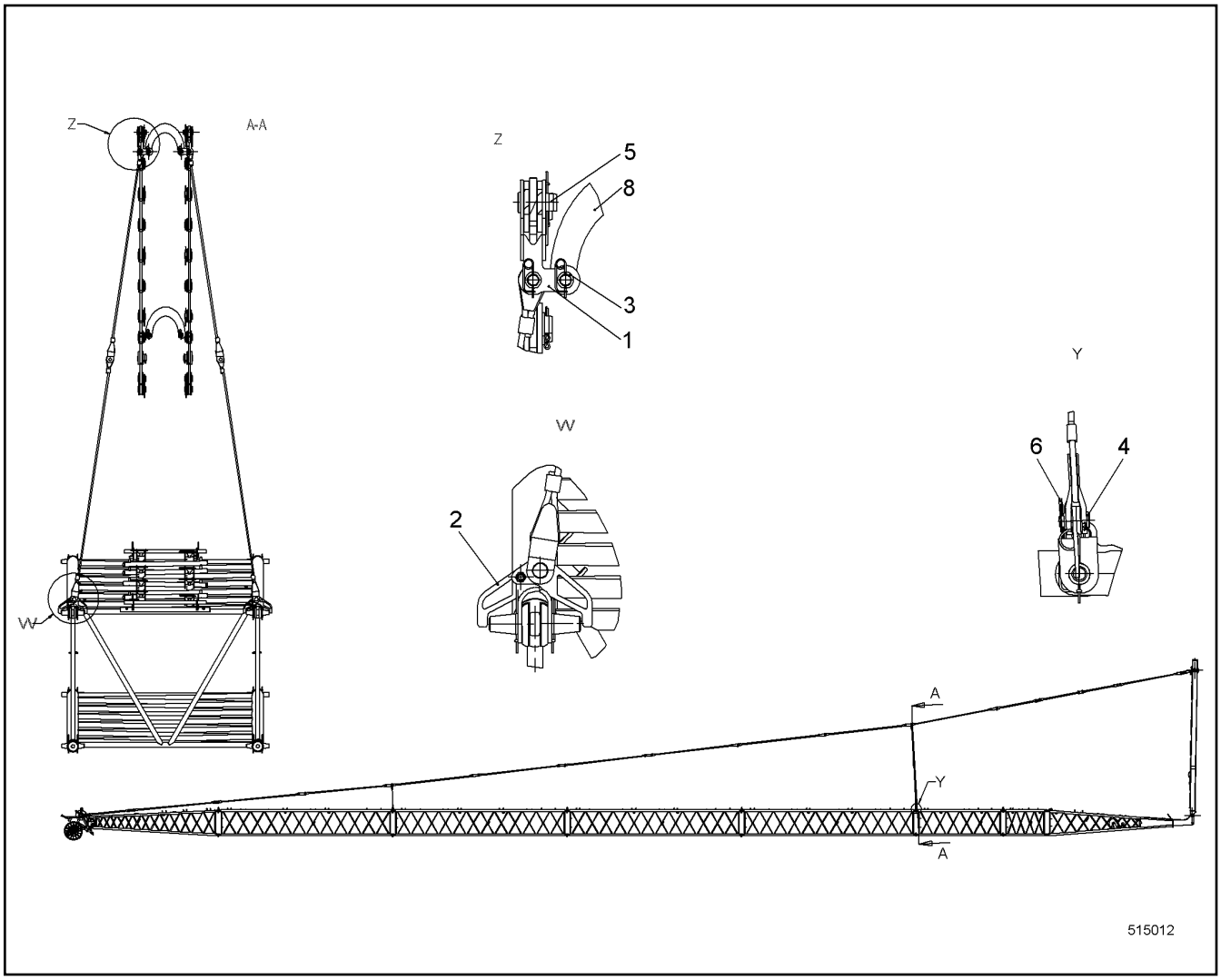

Pos.	Item	Quantity	Description	Bezeichnung	Serie	K
1	970591503	4	FORK	GABEL		
2	990678914	4	FORK ⇨ ❑ 642	GABEL		
3	421102914	12	WASHER DIN EN 28738 36 ST;	SCHEIBE		
4	453050914	12	PIN DIN 1435-B 35H11X90X80 S355J2;EN 1002	BOLZEN		
5	949351814	4	PIN 63X120 LHRD900-40;10019758	BOLZEN		
6	433101208	12	RETAINING SPRING 4MM	SICHERUNGSFEDER		
8	10555261	2	BRACKET	BUEGEL		

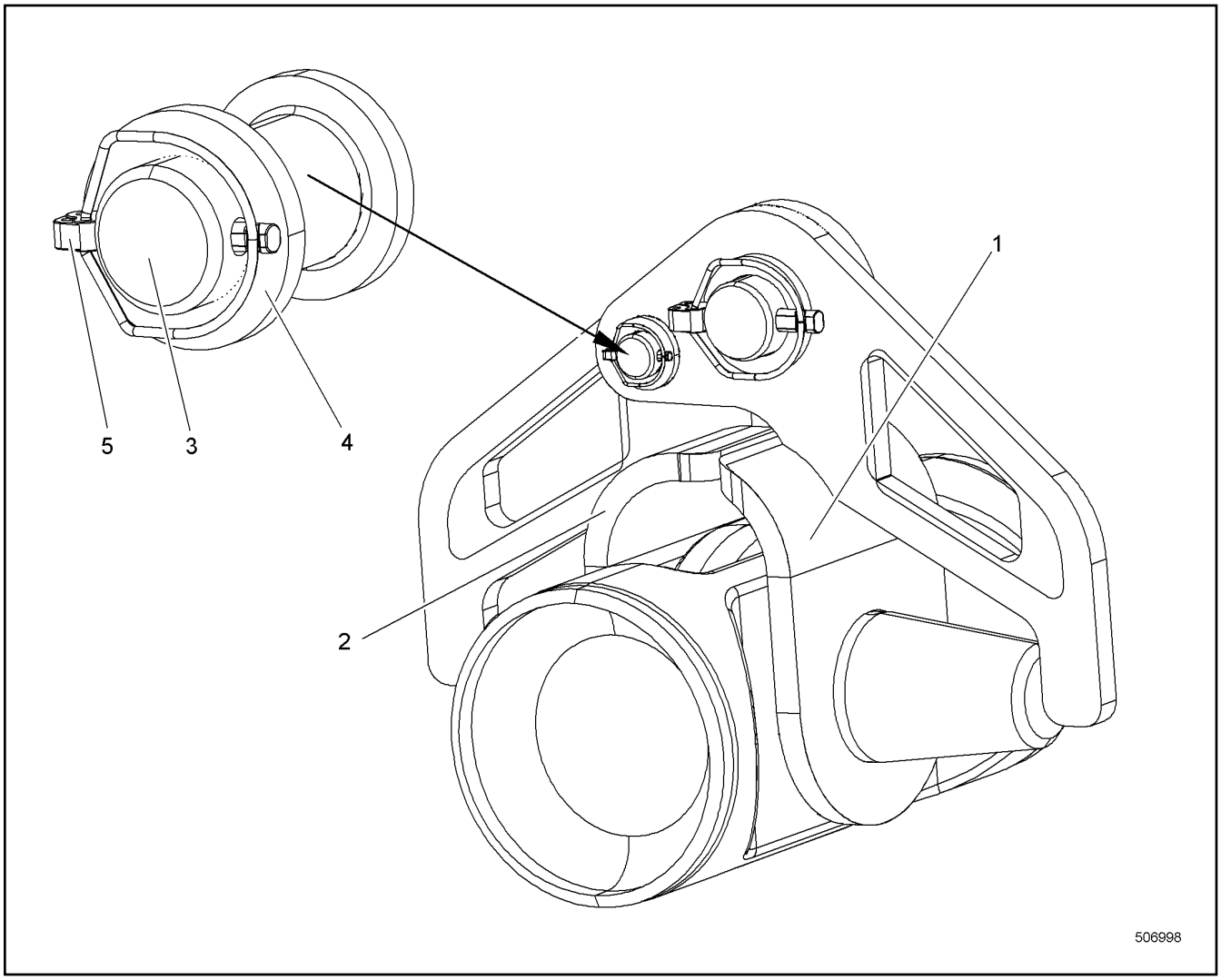

Pos.	Item	Quantity	Description	Bezeichnung	Serie	K
1	990678714	1	FORK ST.CONST.	GABEL SCHWK		
2	990678814	1	FORK ST.CONST.	GABEL SCHWK		
3	945877814	1	PIN 30X46 LHRD750-30;10019758	BOLZEN		
4	421101714	1	WASHER DIN EN 28738 20 ST;	SCHEIBE		
5	485565814	1	SAFETY PLUG W HINGE-LID 4X27	SICHERHEITSKLAPPSTECKER		

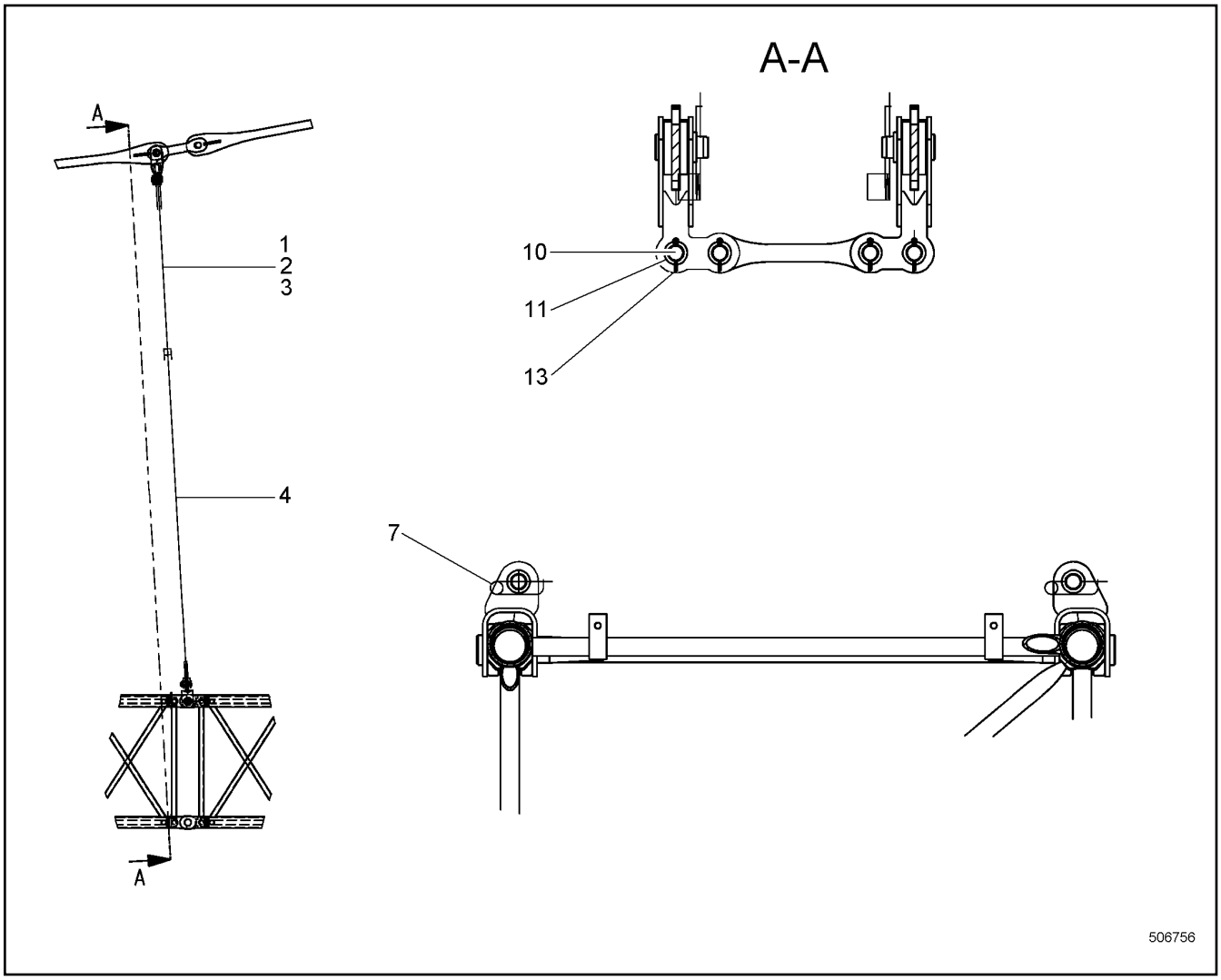

Pos.	Item	Quantity	Description	Bezeichnung	Serie	K
1	774760214	6	GUY ROPE	HALTESEIL		
2	774760514	8	GUY ROPE	HALTESEIL		
3	774760414	6	GUY ROPE	HALTESEIL		
4	774760314	6	GUY ROPE	HALTESEIL		
5	453050914	14	PIN DIN 1435-B 35H11X90X80 S355J2;EN 1002	BOLZEN		
6	421102914	14	WASHER DIN EN 28738 36 ST;	SCHEIBE		
7	433101208	14	RETAINING SPRING 4MM	SICHERUNGSFEDER		
9	790538014	2	GUY ROPE	HALTESEIL		
10	10350539	2	GUY ROPE	HALTESEIL		

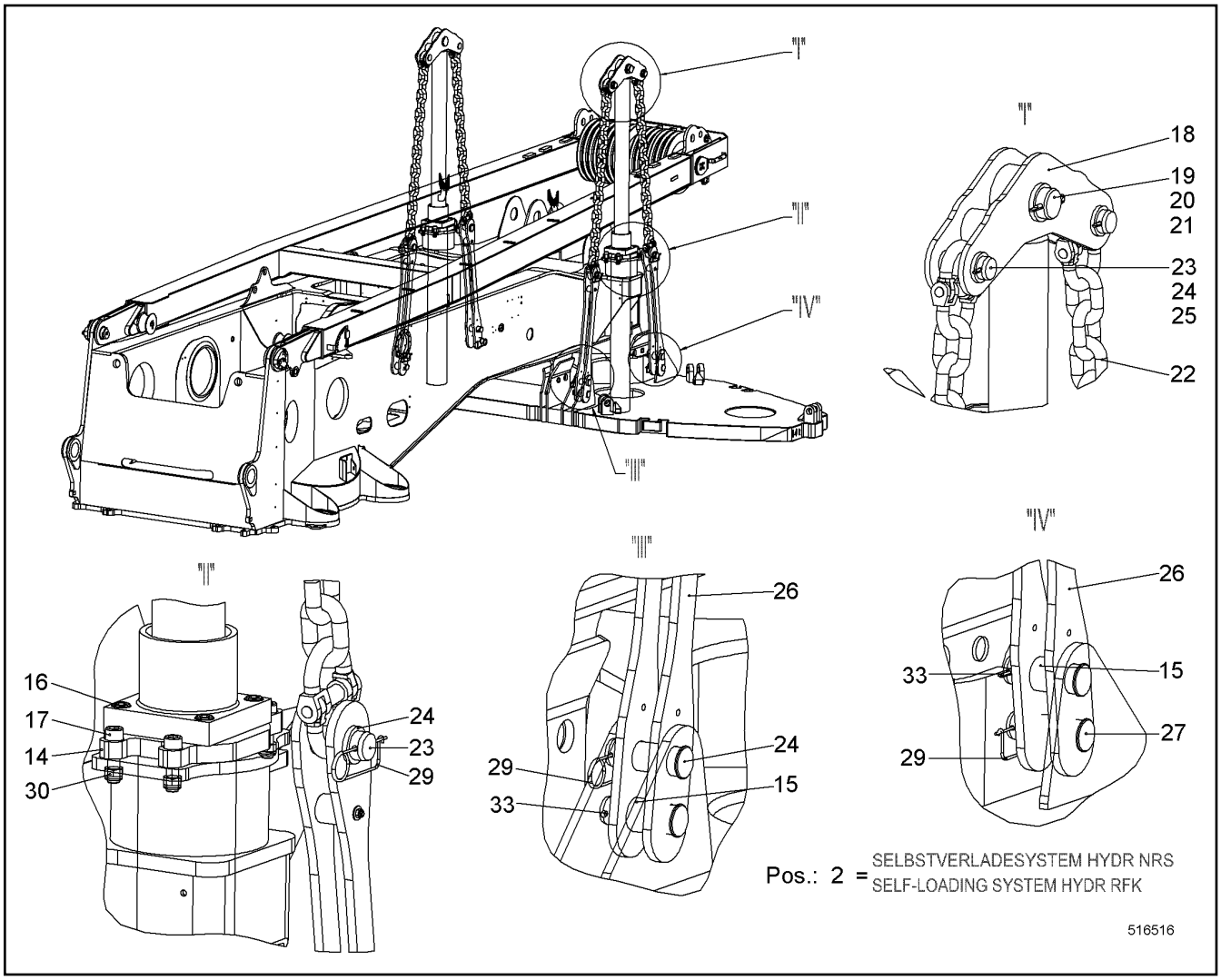

Pos.	Item	Quantity	Description	Bezeichnung	Serie	K
2	10519712	1	SELF-LOADING SYSTEM HYDR RFK ⇨ ❑ 645	SELBSTVERLADESYSTEM HYDR		
4	11229709	1	HOSE LIST ⇨ ❑ 647	SCHLAUCHLISTE		
14	959571914	2	ADAPTER PLATE	ADAPTERBLECH		
16	10544113	8	SOCKET HEAD SCREW ISO 4762 M24X60 10.9	ZYLINDERSCHRAUBE		
17	10544121	8	SOCKET HEAD SCREW ISO 4762 M24X100 10.	ZYLINDERSCHRAUBE		
18	992751514	2	LEVER ST.CONST.	HEBEL SCHWK		
19	485518914	2	PIN DIN EN 22341-B 80H11X160 34CRNIMO6;E	BOLZEN		
20	421103814	2	WASHER DIN EN 28738 80 ST;	SCHEIBE		
21	433011114	2	SPLIT PIN ISO 1234 13X112 A4	SPLINT		
22	10350940	4	CHAIN CPL	KETTE KPL		
23	956711314	8	PIN	BOLZEN		
24	421103514	12	WASHER DIN EN 28738 60 ST;	SCHEIBE		
25	433010314	4	SPLIT PIN ISO 1234 10X80 A4	SPLINT		
26	993560614	4	MOUNTING LINK CPL ⇨ ❑ 648	LASCHE KPL		
27	959799614	8	PIN RD68X175 LHRD900-40;10019758	BOLZEN		
29	433102508	8	RETAINING SPRING 5MM	SICHERUNGSFEDER		
30	10544159	8	HEX NUT ISO 10511 M24 10	SECHSKANTMUTTER		
33	433009714	4	SPLIT PIN ISO 1234 8X90	SPLINT		

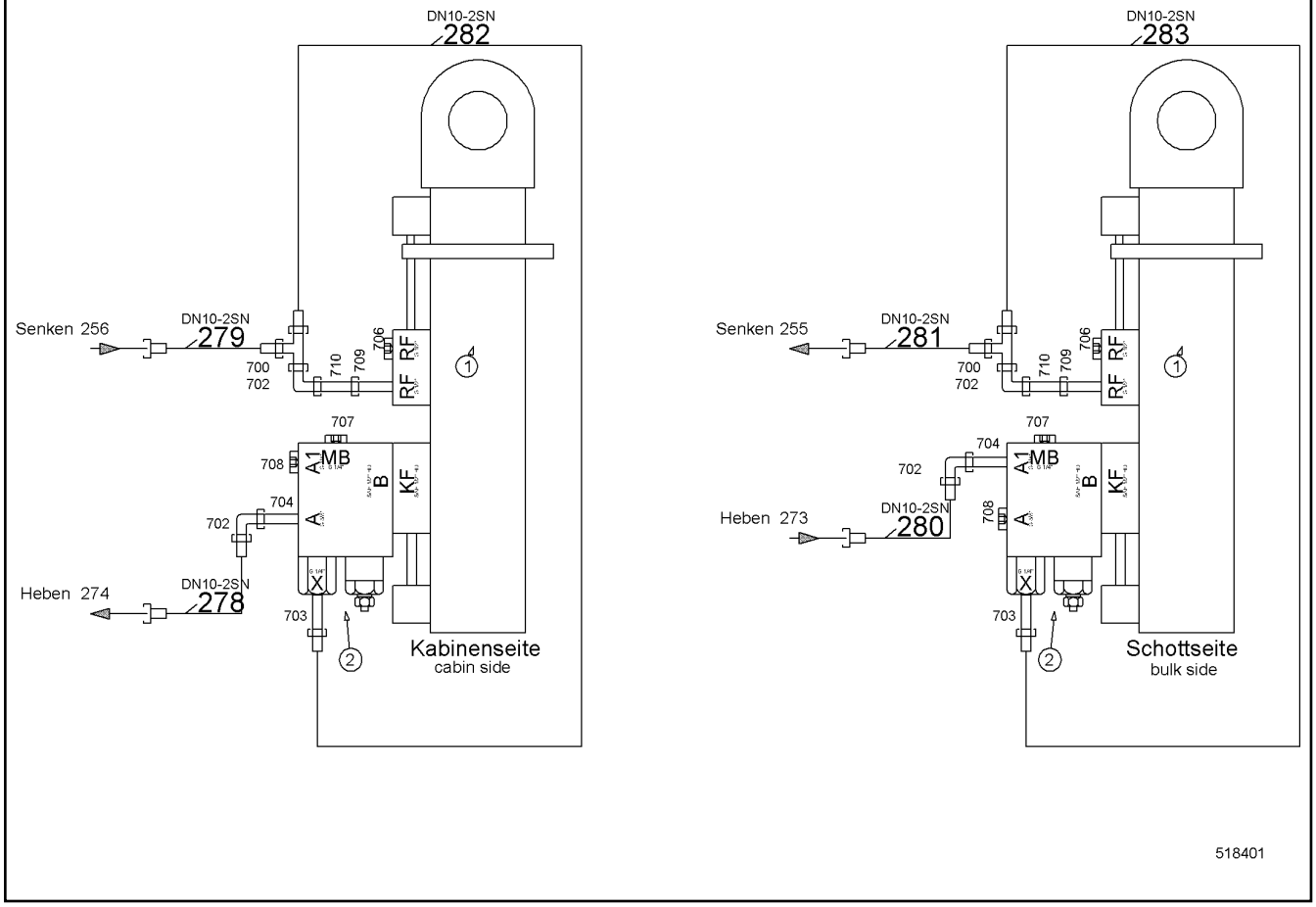

Pos.	Item	Quantity	Description	Bezeichnung	Serie	K
1	10227855	2	DOUBLE-ACTING CYL ⇨ ❑ 646	DOPPELWIRKZYL		
2	10226750	2	LOWERING BRAKE VALVE	SENKBREMSVENTIL		
700	7617461	2	FLANGE JOINT	VERSCHRAUBUNG		
702	7617354	4	FLANGE JOINT	VERSCHRAUBUNG		
703	471004514	2	FLANGE JOINT	VERSCHRAUBUNG		
704	471032708	2	FLANGE JOINT	VERSCHRAUBUNG		
706	247112702	2	FLANGE JOINT	VERSCHRAUBUNG		
707	247117302	2	FLANGE JOINT	VERSCHRAUBUNG		
708	247128402	2	FLANGE JOINT	VERSCHRAUBUNG		
709	471033214	2	FLANGE JOINT	VERSCHRAUBUNG		
710	485433314	2	FLANGE JOINT	VERSCHRAUBUNG		

OHNE BILD
WITHOUT ILLUSTRATION
SANS PLANCHE
SIN FIG.
SEM ILUSTRAÇÃO
БЕЗ ИЗОБРАЖЕНИЯ

600000

Pos.	Item	Quantity	Description	Bezeichnung	Serie	K
1	10352447	1	SEALING SET CPL CYL	DS KPL ZYL		

ACHTUNG !
ATTENTION !
ATTENTION !
ATENCIÓN !
ATENÇÃO !
ВНИМАНИЕ

Für Schlauchbestellungen kann über die Schlauchnummer, in der entsprechenden Schlauchliste, die Identnummer festgestellt werden.

For ordering flexible hoses you can find the identification number through the hose-number in the corresponding hose-list.

Pour des ordres de tuyau flexible le nombre d'identification on voit dans la liste de tuyau flexible correspondente.

Para el pedido de manguera, indicar el número de identificación de la manguera de la lista respectiva.

Para se encomendar uma mangueira, consulte o número de identificaçao na respectiva lista de mangueiras.

Для оформления заказов на шланги/рукавы идент. № может быть определен при помощи номера шланга/рукава, указанного в соотетствующем перечне шлангов/рукавов.

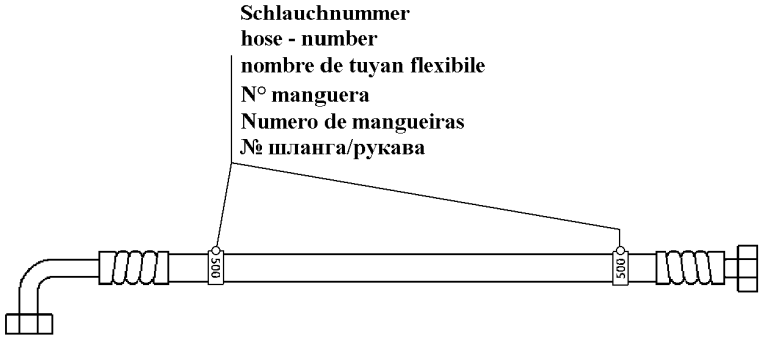

500000

Pos.	Item	Quantity	Description	Bezeichnung	Serie	K
278	928204714	1	HOSE CPL	SCHLAUCH KPL		
279	992296514	1	HOSE CPL	SCHLAUCH KPL		
280	918248414	1	HOSE CPL	SCHLAUCH KPL		
281	995175314	1	HOSE CPL	SCHLAUCH KPL		
282	991109014	1	HOSE CPL	SCHLAUCH KPL		
283	991109014	1	HOSE CPL	SCHLAUCH KPL		

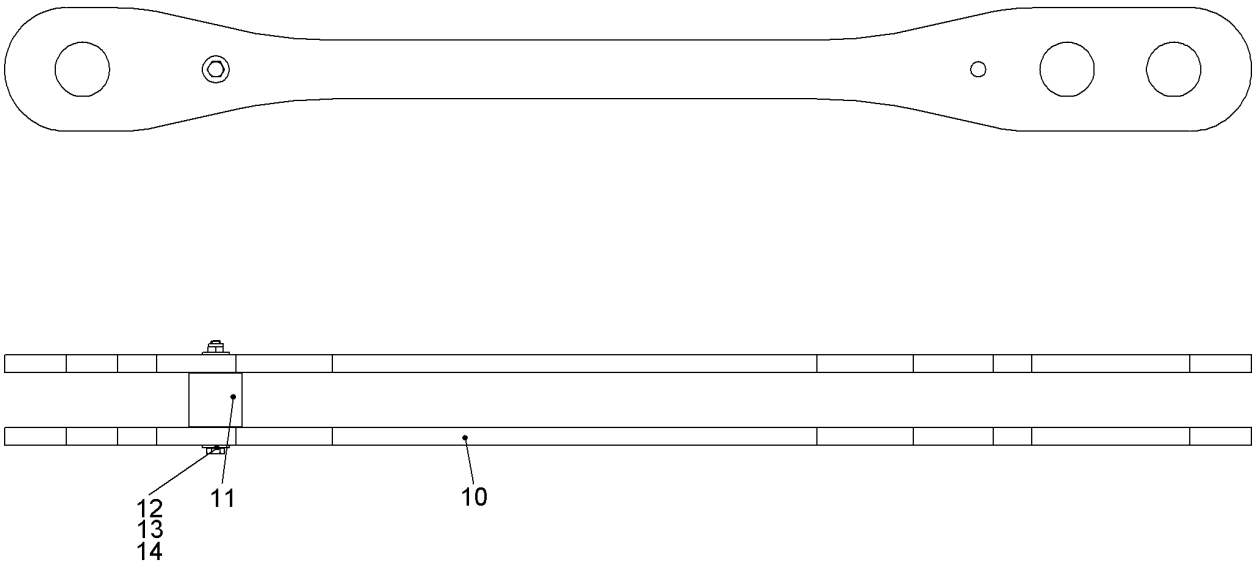

510338

Pos.	Item	Quantity	Description	Bezeichnung	Serie	K
10	950610714	2	BUTT STRAP	LASCHE		
12	10540511	2	WASHER ISO 7093-1 10 A4	SCHEIBE		
13	10539960	1	HEX SCREW ISO 4017 M10X120 A4-70	SECHSKANTSCHRAUBE		
14	10540494	1	HEX NUT ISO 10511 M10 A4	SECHSKANTMUTTER		

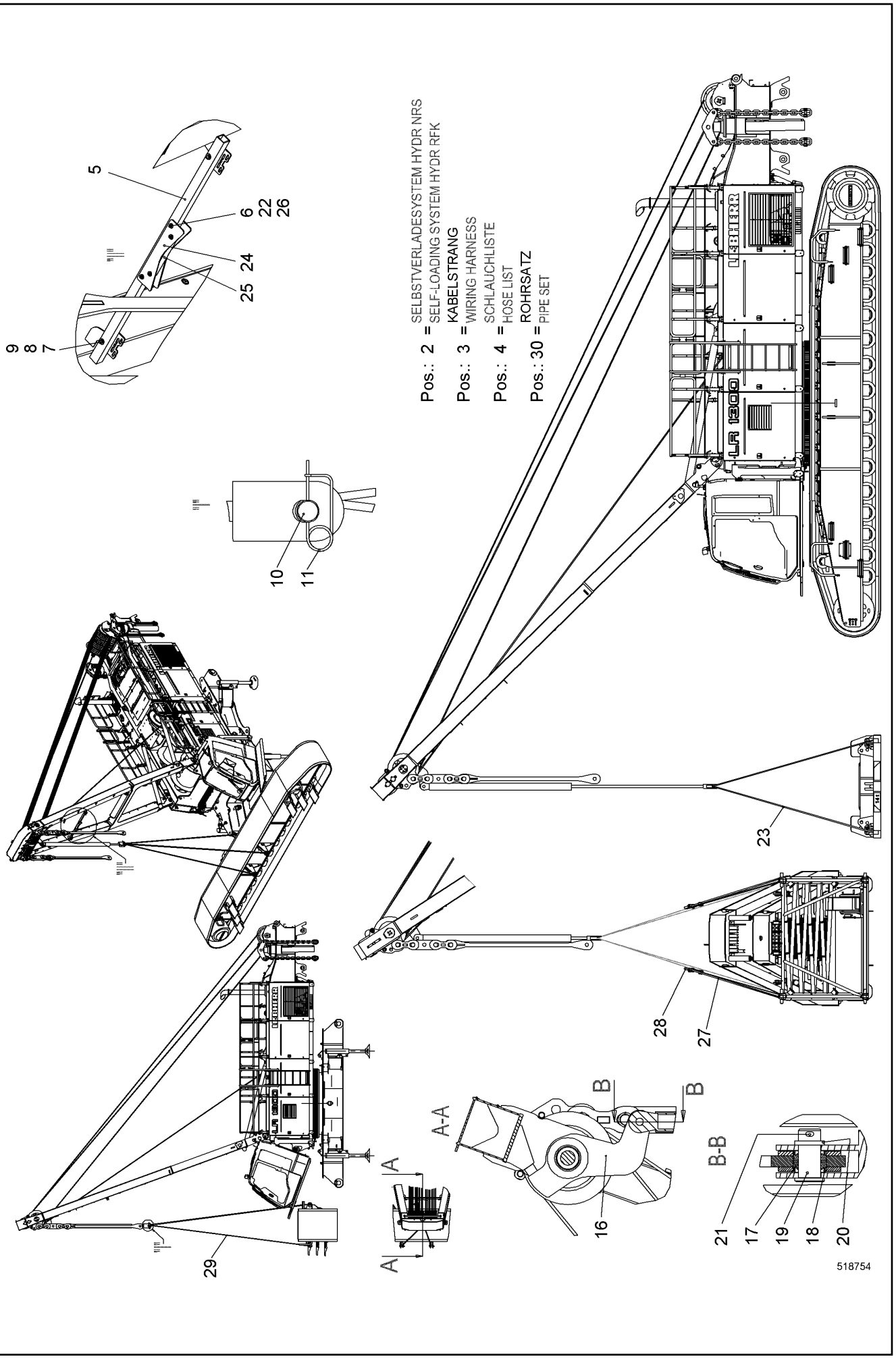

8.7.2015 518754 LIEBHERR	**138281_ETK_001** **SELF-LOADING SYSTEM RFK** **SELBSTVERLADESYSTEM NRS**	649 (1/2) **11 23 619 7**

Pos.	Item	Quantity	Description	Bezeichnung	Serie	K
2	10519738	1	SELF-LOADING SYSTEM HYDR RFK ⇨ ❑ 651	SELBSTVERLADESYSTEM HYDR		
4	992774714	1	HOSE LIST ⇨ ❑ 658	SCHLAUCHLISTE		
5	10557117	1	SQUARE TUBE	VIERKANTROHR		
6	10540493	4	HEX NUT ISO 10511 M8 A4	SECHSKANTMUTTER		
7	10540511	4	WASHER ISO 7093-1 10 A4	SCHEIBE		
8	10539293	2	HEX SCREW ISO 4017 M10X75 A4-70	SECHSKANTSCHRAUBE		
9	10540494	2	HEX NUT ISO 10511 M10 A4	SECHSKANTMUTTER		
10	949351814	1	PIN 63X120 LHRD900-40;10019758	BOLZEN		
11	433105008	1	RETAINING SPRING DIN 2194 6MM FS	SICHERUNGSFEDER		
16	11890636	1	HOISTING STRAP CPL	HUBLASCHE KPL		
17	746913614	1	SPHERICAL BEARING	GELENKLAGER		
19	485519214	1	PIN DIN EN 22341-B 50H11X110 34CRNIMO6;E	BOLZEN		
20	421103314	1	WASHER DIN EN 28738 50 ST;	SCHEIBE		
21	433010314	1	SPLIT PIN ISO 1234 10X80 A4	SPLINT		
22	10541592	4	HEX SCREW ISO 4017 M8X75 A4-70	SECHSKANTSCHRAUBE		
23	797027814	1	BALLAST CHAIN	BALLASTIERGEHAENGE		
24	10540513	2	SHEET	PLATTE		
25	11228227	1	SHEET	PLATTE		
26	10540510	8	WASHER ISO 7093-1 8 A4	SCHEIBE		
27	10280543	4	ROUND SLING	RUNDSCHLINGE		
28	773935814	4	SHACKLE	SCHAEKEL		
29	790365114	1	ROUND SLING	RUNDSCHLINGE		
30	10227437	1	PIPE SET	ROHRSATZ		

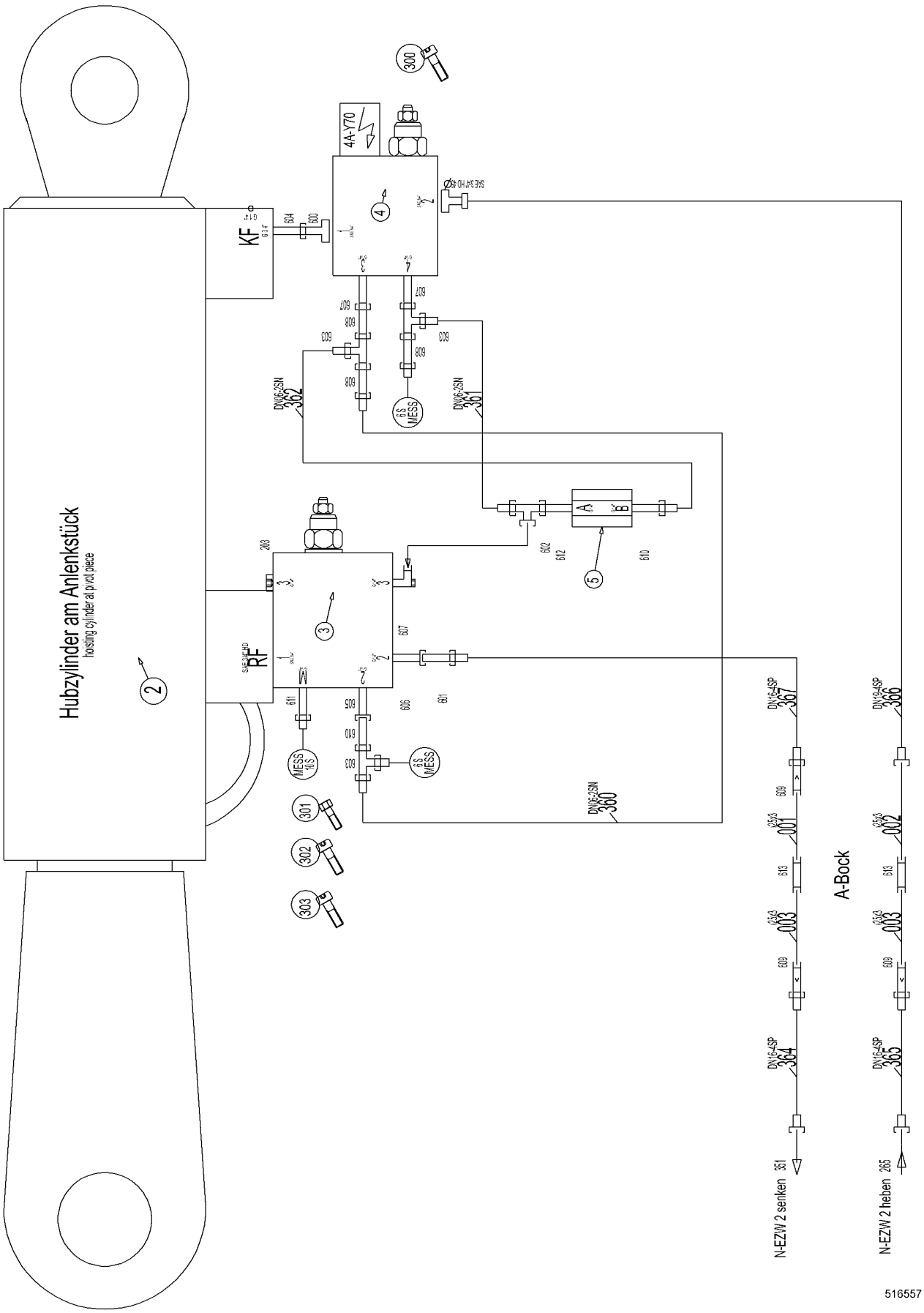

8.7.2015 516557	**138281_ETK_001**	651 (1/2)
LIEBHERR	**SELF-LOADING SYSTEM HYDR RFK** **SELBSTVERLADESYSTEM HYDR NRS**	**10 51 973 8**

Pos.	Item	Quantity	Description	Bezeichnung	Serie	K
2	592104214	1	DOUBLE-ACTING CYL ⇨ ❑ 653	DOPPELWIRKZYL		
3	511640414	1	LOWERING BRAKE VALVE ⇨ ❑ 654	SENKBREMSVENTIL		
4	592158414	1	LOWERING BRAKE VALVE ⇨ ❑ 656	SENKBREMSVENTIL		
5	592178314	1	RESTRICTOR VALVE	DROSSELVENTIL		
201	510695314	2	GAUGE CONNECTION	MESSSTUTZEN		
202	510694514	1	GAUGE CONNECTION	MESSSTUTZEN		
203	247117302	1	FLANGE JOINT	VERSCHRAUBUNG		
300	4043014	2	SOCKET HEAD SCREW ISO 4762 M10X140 10.	ZYLINDERSCHRAUBE		
301	4002195	2	HEX SCREW ISO 4014 M10X100 10.9	SECHSKANTSCHRAUBE		
302	4900980	2	SOCKET HEAD SCREW ISO 4762 M10X75 10.9	ZYLINDERSCHRAUBE		
303	4002442	2	SOCKET HEAD SCREW ISO 4762 M10X130 10.	ZYLINDERSCHRAUBE		
600	510709114	1	FLANGE JOINT	VERSCHRAUBUNG		
601	491033414	1	FLANGE JOINT	VERSCHRAUBUNG		
602	482431214	1	FLANGE JOINT	VERSCHRAUBUNG		
603	482331114	3	FLANGE JOINT	VERSCHRAUBUNG		
604	481930714	1	FLANGE JOINT	VERSCHRAUBUNG		
605	247042402	1	FLANGE JOINT	VERSCHRAUBUNG		
606	475501914	1	FLANGE JOINT	VERSCHRAUBUNG		
607	473210214	3	FLANGE JOINT	VERSCHRAUBUNG		
608	472531508	3	FLANGE JOINT	VERSCHRAUBUNG		
609	475033014	3	FLANGE JOINT	VERSCHRAUBUNG		
610	471032108	2	FLANGE JOINT	VERSCHRAUBUNG		
611	471004514	1	FLANGE JOINT	VERSCHRAUBUNG		
612	481930314	1	FLANGE JOINT	VERSCHRAUBUNG		
613	247001802	2	FLANGE JOINT	VERSCHRAUBUNG		
614	510587514	2	FLANGE HALF	FLANSCHHAELFTE		
615	10490784	1	PLAIN COMPRESSION RING	RECHTECKRING		
616	4001246	4	HEX SCREW ISO 4017 M10X35 10.9	SECHSKANTSCHRAUBE		

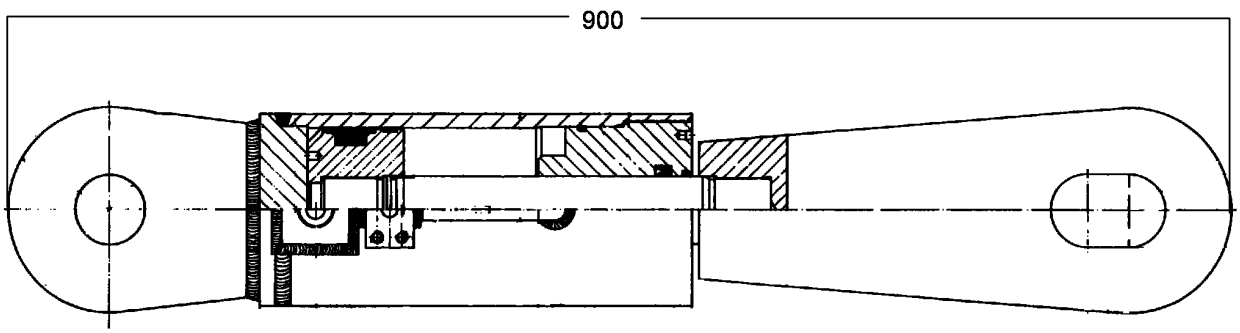

602143

Pos.	Item	Quantity	Description	Bezeichnung	Serie	K
900	790407814	1	SEALING SET CPL CYL	DS KPL ZYL		

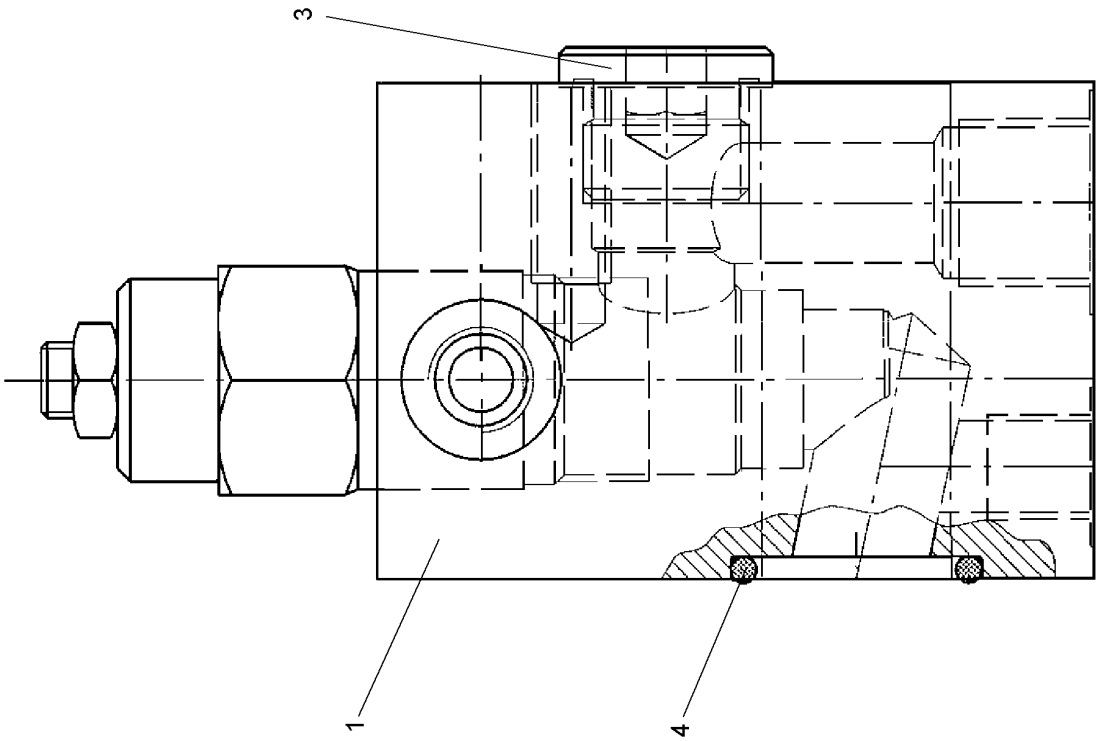

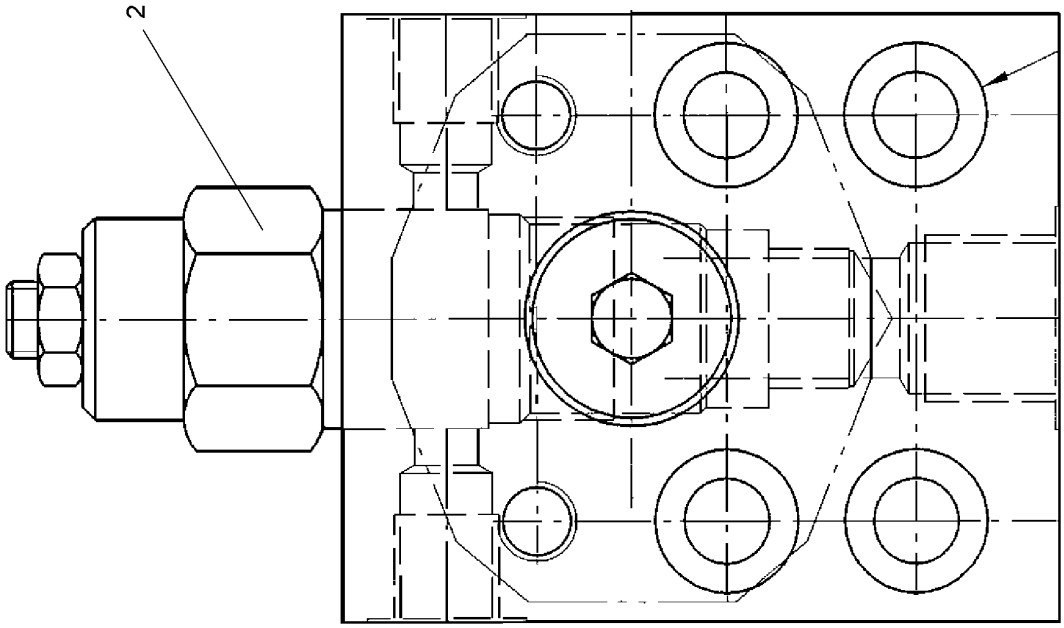

607341

Pos.	Item	Quantity	Description	Bezeichnung	Serie	K
1	11239912	1	HOUSING	GEHAEUSE		
2	11239880	1	LOWERING BRAKE VALVE	SENKBREMSVENTIL		
3	11239915	1	SCREW PLUG DIN 908 G1/2	VERSCHLUSSSCHRAUBE		
4	11239916	1	O-RING	O-RING		

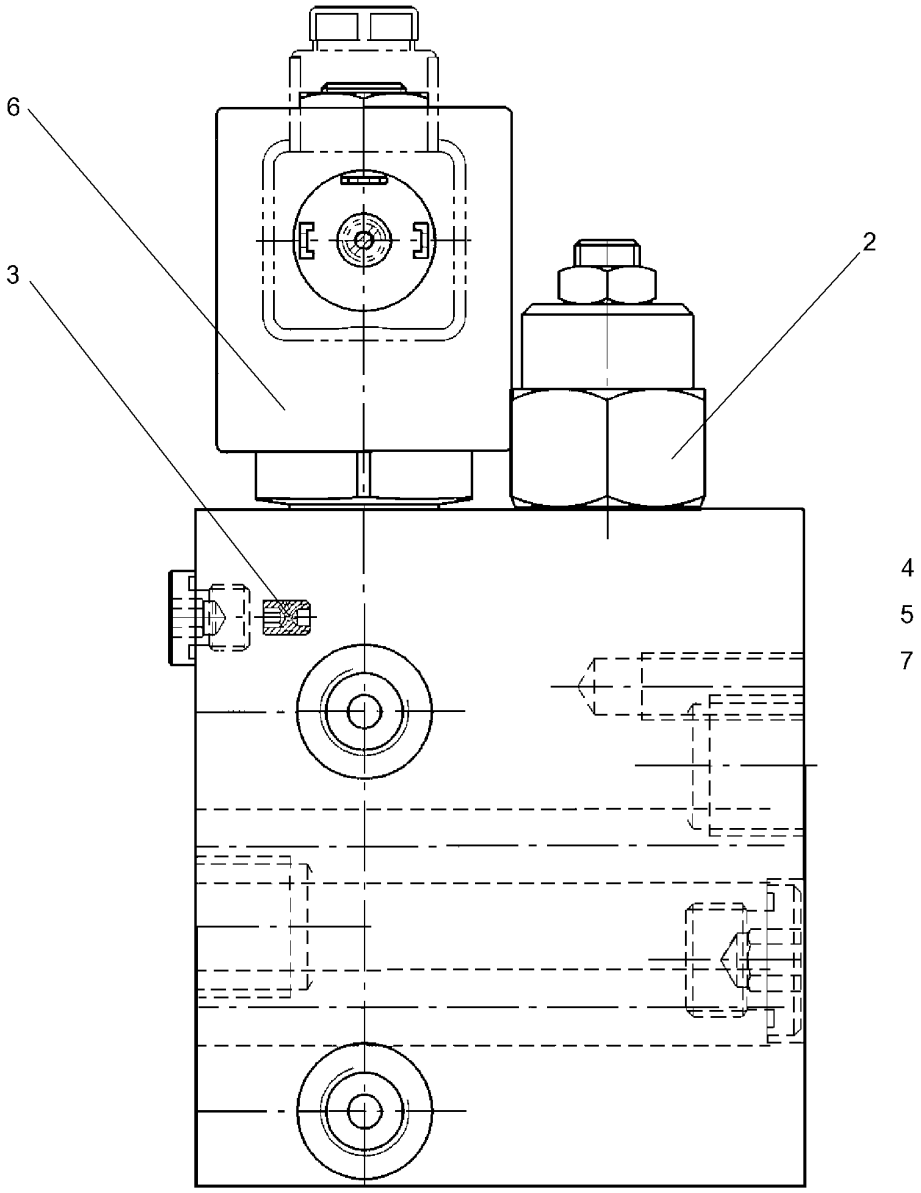

607342

Pos.	Item	Quantity	Description	Bezeichnung	Serie	K
2	11239880	1	LOWERING BRAKE VALVE	SENKBREMSVENTIL		
3	11239895	1	NOZZLE	DUESE		
4	11239897	1	SCREW PLUG DIN 908 G3/8	VERSCHLUSSSCHRAUBE		
5	11239904	1	SCREW PLUG DIN 908 G1/8	VERSCHLUSSSCHRAUBE		
6	11226980	1	SOLENOID VALVE	MAGNETVENTIL		
7	11239908	1	CAP	KAPPE		

ACHTUNG !
ATTENTION !
ATTENTION !
ATENCIÓN !
ATENÇÃO !
ВНИМАНИЕ

Für Schlauchbestellungen kann über die Schlauchnummer, in der entsprechenden Schlauchliste, die Identnummer festgestellt werden.

For ordering flexible hoses you can find the identification number through the hose-number in the corresponding hose-list.

Pour des ordres de tuyau flexible le nombre d'identification on voit dans la liste de tuyau flexible correspondente.

Para el pedido de manguera, indicar el número de identificación de la manguera de la lista respectiva.

Para se encomendar uma mangueira, consulte o número de identificaçao na respectiva lista de mangueiras.

Для оформления заказов на шланги/рукавы идент. № может быть определен при помощи номера шланга/рукава, указанного в соотетствующем перечне шлангов/рукавов.

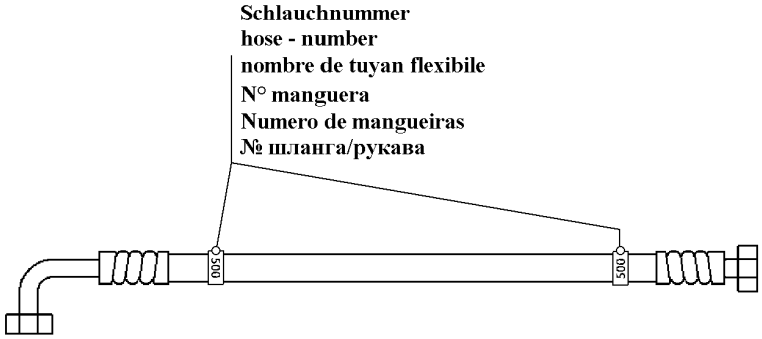

500000

Pos.	Item	Quantity	Description	Bezeichnung	Serie	K
1	10518558	3	ADHESIVE LABEL	HAFTETIKETTE		
360	928619114	1	HOSE CPL	SCHLAUCH KPL		
361	990055814	1	HOSE CPL	SCHLAUCH KPL		
362	990055914	1	HOSE CPL	SCHLAUCH KPL		
364	919126414	1	HOSE CPL	SCHLAUCH KPL		
365	919126414	1	HOSE CPL	SCHLAUCH KPL		
366	992857714	1	HOSE CPL	SCHLAUCH KPL		
367	992837314	1	HOSE CPL	SCHLAUCH KPL		

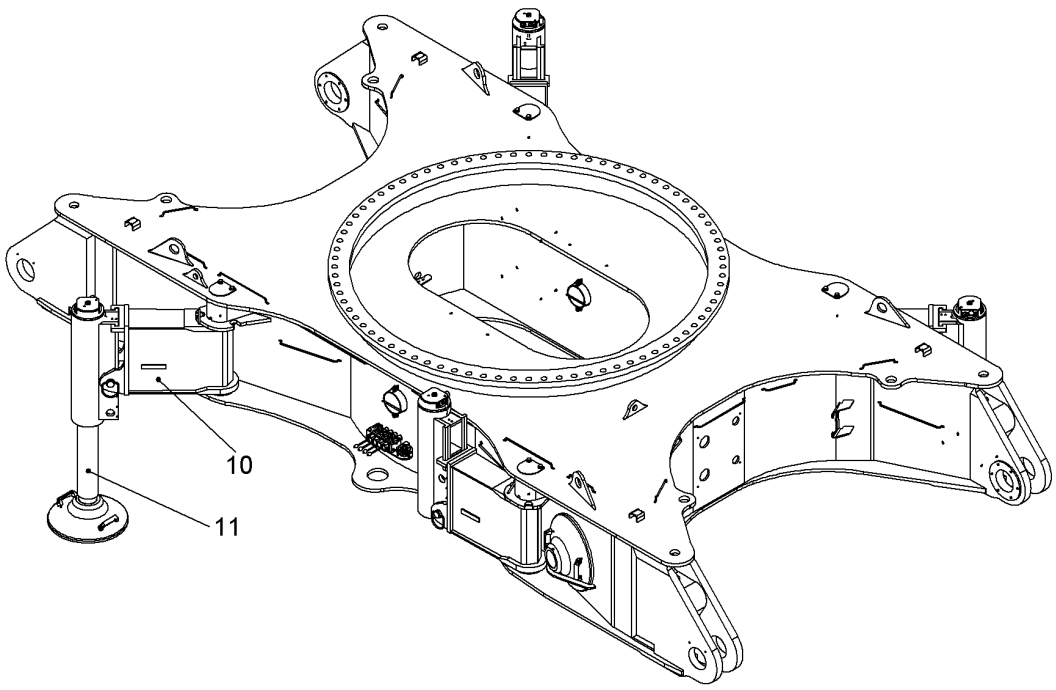

Pos.	Item	Quantity	Description	Bezeichnung	Serie	K
10	11895685	1	SELF-LOADING SYSTEM RFK ⇨ ❑ 660	SELBSTVERLADESYSTEM NRS		
11	11895687	1	SELF-LOADING SYSTEM RFK ⇨ ❑ 666	SELBSTVERLADESYSTEM NRS		

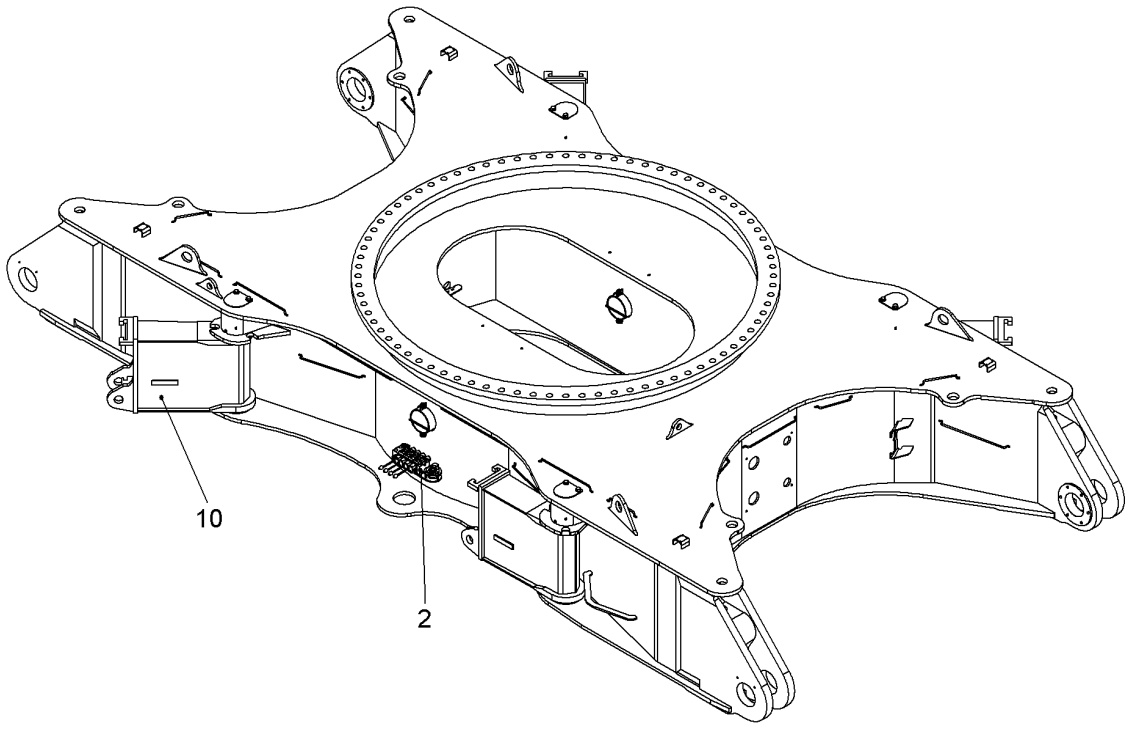

Pos.: 4 = SCHLAUCHLISTE / HOSE LIST

520420

Pos.	Item	Quantity	Description	Bezeichnung	Serie	K
2	11894080	1	JACK-UP SYSTEM HYDR RFK ⇨ ❑ 661	JACK-UP SYSTEM HYDR NRS		
4	11247790	1	HOSE LIST ⇨ ❑ 663	SCHLAUCHLISTE		
10	11895686	1	SELF-LOADING SYSTEM RFK ⇨ ❑ 664	SELBSTVERLADESYSTEM NRS		

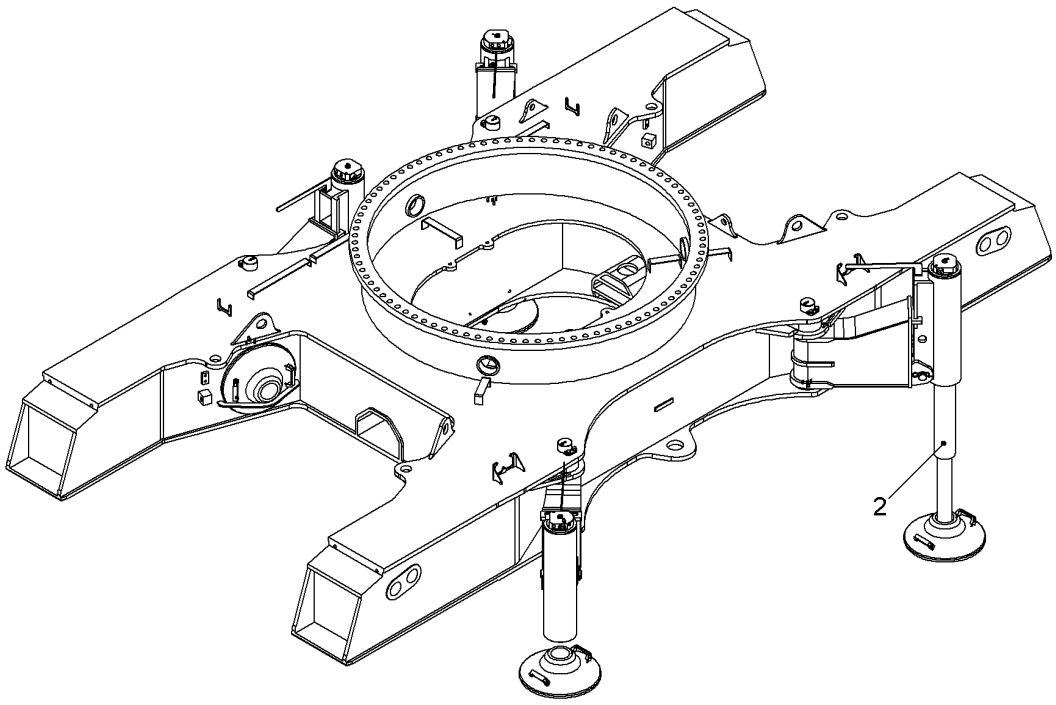

Pos.	Item	Quantity	Description	Bezeichnung	Serie	K
2	11894083	1	TUBING HYDR ⇨ ❑ 662	VERROHRUNG HYDR		

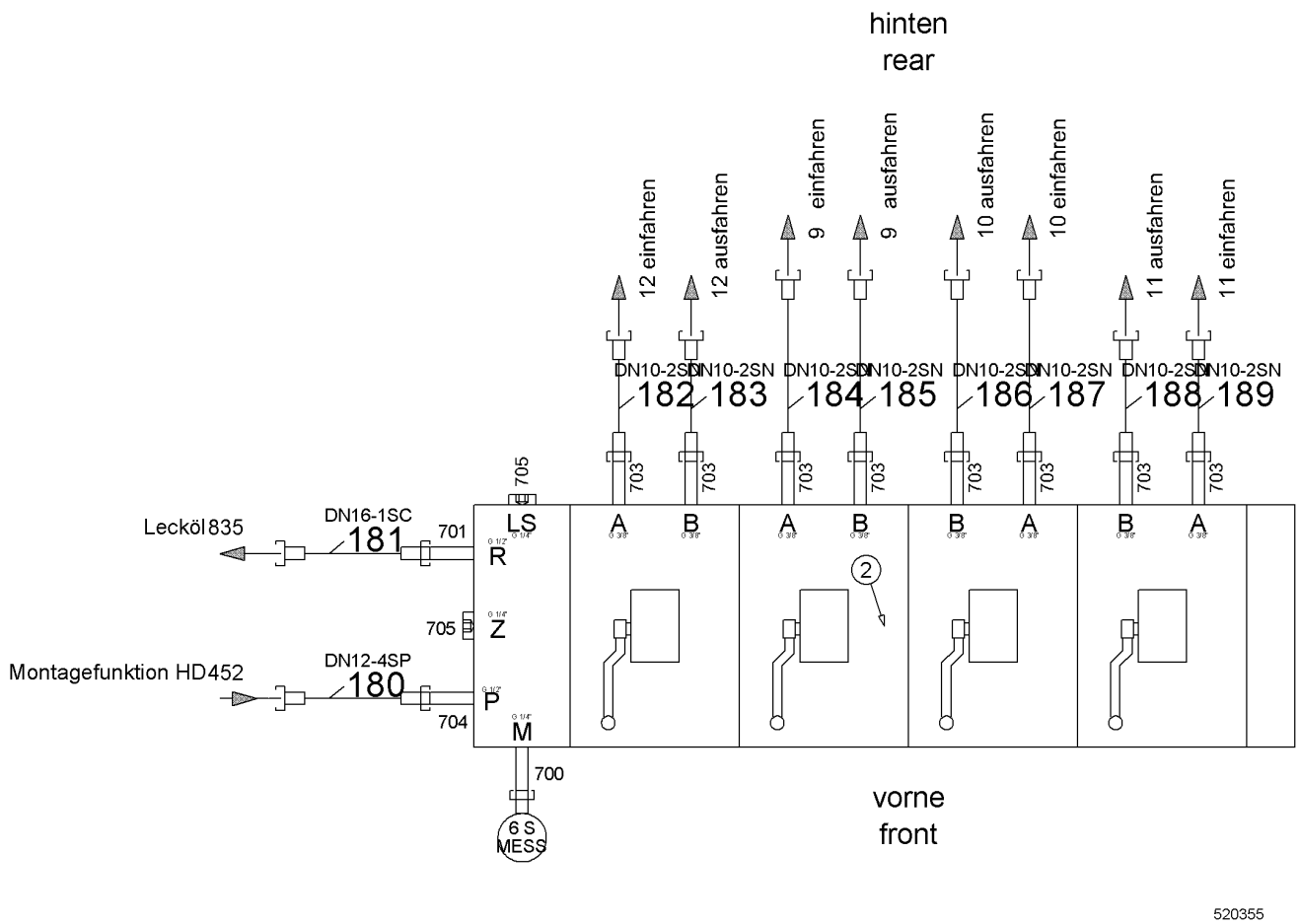

Pos.	Item	Quantity	Description	Bezeichnung	Serie	K
2	10224607	1	DIRECTIONAL CTRL. VALVE	WEGESCHIEBER		
700	473210214	1	FLANGE JOINT	VERSCHRAUBUNG		
701	247009702	1	FLANGE JOINT	VERSCHRAUBUNG		
703	471032708	8	FLANGE JOINT	VERSCHRAUBUNG		
704	471033214	1	FLANGE JOINT	VERSCHRAUBUNG		
705	247117302	2	FLANGE JOINT	VERSCHRAUBUNG		
706	510695314	1	GAUGE CONNECTION	MESSSTUTZEN		

ACHTUNG !
ATTENTION !
ATTENTION !
ATENCIÓN !
ATENÇÃO !
ВНИМАНИЕ

Für Schlauchbestellungen kann über die Schlauchnummer, in der entsprechenden Schlauchliste, die Identnummer festgestellt werden.

For ordering flexible hoses you can find the identification number through the hose-number in the corresponding hose-list.

Pour des ordres de tuyau flexible le nombre d'identification on voit dans la liste de tuyau flexible correspondente.

Para el pedido de manguera, indicar el número de identificación de la manguera de la lista respectiva.

Para se encomendar uma mangueira, consulte o número de identificaçao na respectiva lista de mangueiras.

Для оформления заказов на шланги/рукавы идент. № может быть определен при помощи номера шланга/рукава, указанного в соотетствующем перечне шлангов/рукавов.

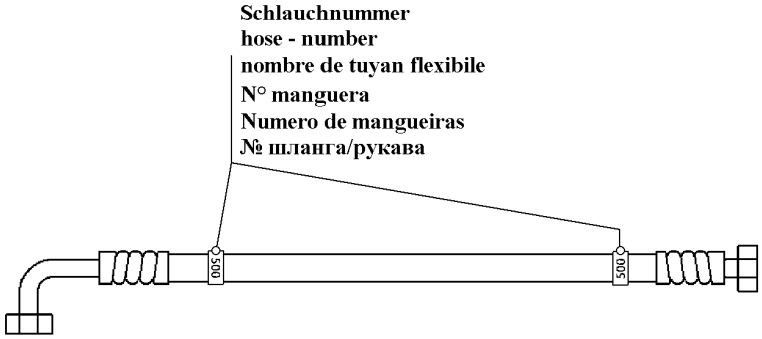

500000

Pos.	Item	Quantity	Description	Bezeichnung	Serie	K
180	992273614	1	HOSE CPL	SCHLAUCH KPL		
181	919144714	1	HOSE CPL	SCHLAUCH KPL		
182	993758914	1	HOSE CPL	SCHLAUCH KPL		
183	993758914	1	HOSE CPL	SCHLAUCH KPL		
184	995226814	1	HOSE CPL	SCHLAUCH KPL		
185	919736714	1	HOSE CPL	SCHLAUCH KPL		
186	919736714	1	HOSE CPL	SCHLAUCH KPL		
187	995226814	1	HOSE CPL	SCHLAUCH KPL		
188	993758914	1	HOSE CPL	SCHLAUCH KPL		
189	993758914	1	HOSE CPL	SCHLAUCH KPL		

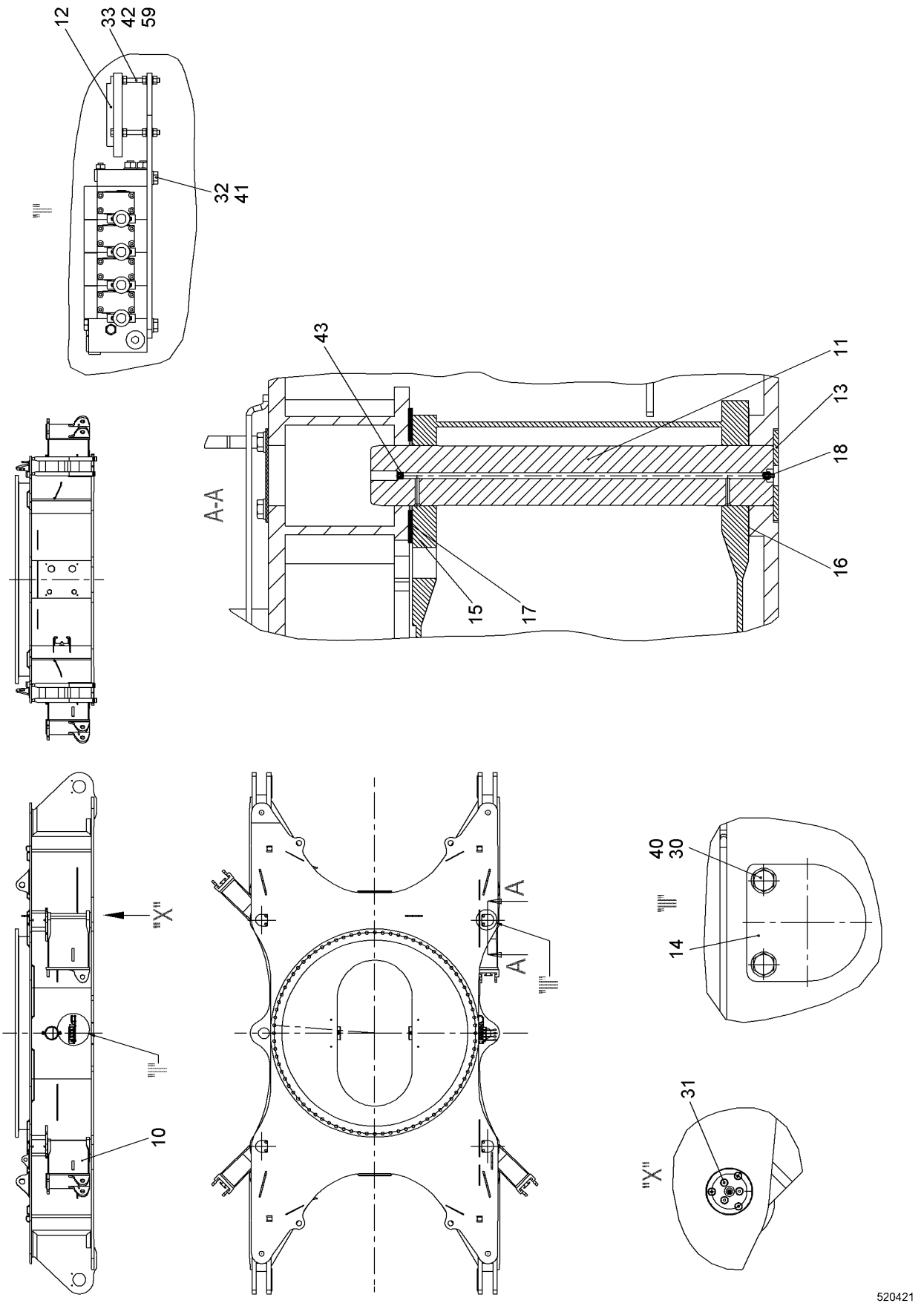
12
33
42
59
32
41
43
11
13
18
16
A-A
15
17
"X"
10
A
A
40
30
14
31
"X"
520421

Pos.	Item	Quantity	Description	Bezeichnung	Serie	K
10	10564433	4	FOLDING BRACKET	KLAPPKONSOLE		
12	714000808	1	SPIRIT LEVEL	WASSERWAAGE		
16	7743242	4	HYDRAULIC-TYPE LUBRICAT.NIPPLE	KEGELSCHMIERNIPPEL		
19	420001014	4	WASHER ISO 7089 8 A4	SCHEIBE		
20	10544172	8	WASHER ISO 7089 16	SCHEIBE		
21	385255314	4	WASHER 200/103X2 DC01;EN 10130	SCHEIBE		
22	385255414	4	WASHER 200/103X1 DC01;EN 10130	SCHEIBE		
23	385255514	4	WASHER 200/103X4 S235JR;EN 10025-2	SCHEIBE		
25	10572058	4	PIN	BOLZEN		
26	406501514	4	HEX SCREW ISO 4017 M8X16 A4-70	SECHSKANTSCHRAUBE		
27	10572054	4	COVER	DECKEL		
28	4001967	24	COUNTERSUNK SCREW DIN 7991 M10X20 8.8	SENKSCHRAUBE		
29	10539316	8	HEX SCREW ISO 4017 M16X30 10.9	SECHSKANTSCHRAUBE		
30	10567564	3	HEX SCREW ISO 4017 M5X55 A4-70	SECHSKANTSCHRAUBE		
31	411551114	9	HEX NUT ISO 4032 M5 A4-70	SECHSKANTMUTTER		
32	420005214	9	WASHER ISO 7089 5 A4	SCHEIBE		
34	403900101	4	SCREW PLUG DIN 906 M10X1 ST	VERSCHLUSSSCHRAUBE		

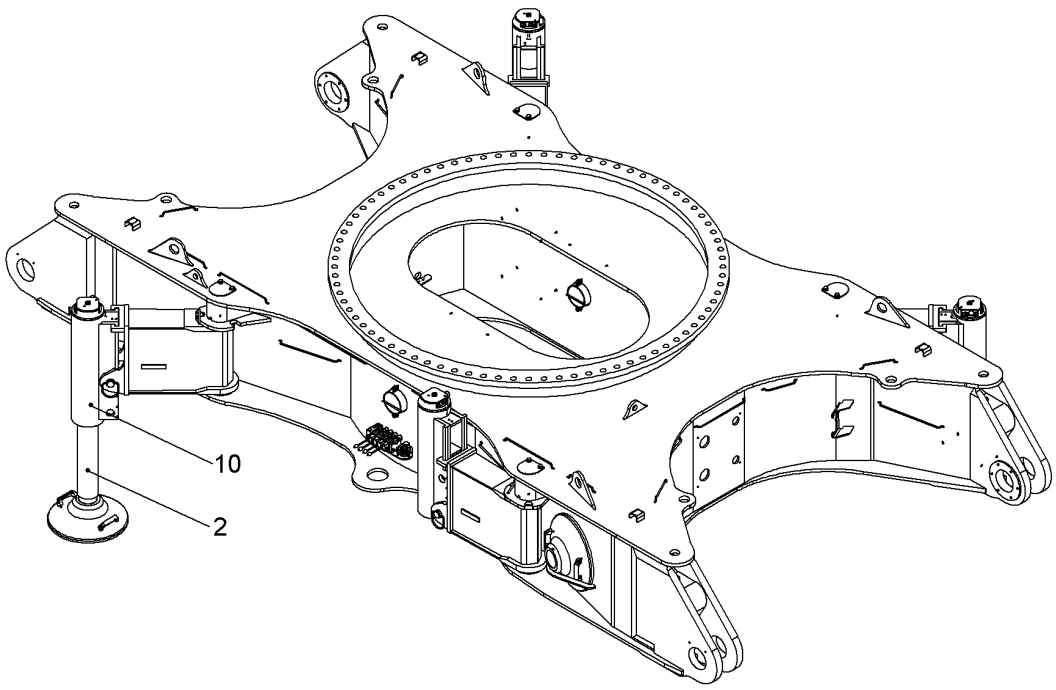

Pos.	Item	Quantity	Description	Bezeichnung	Serie	K
2	11235246	1	JACK-UP SYSTEM HYDR RFK ⇨ ❑ 667	JACK-UP SYSTEM HYDR NRS		
10	11895688	1	SELF-LOADING SYSTEM RFK ⇨ ❑ 671	SELBSTVERLADESYSTEM NRS		

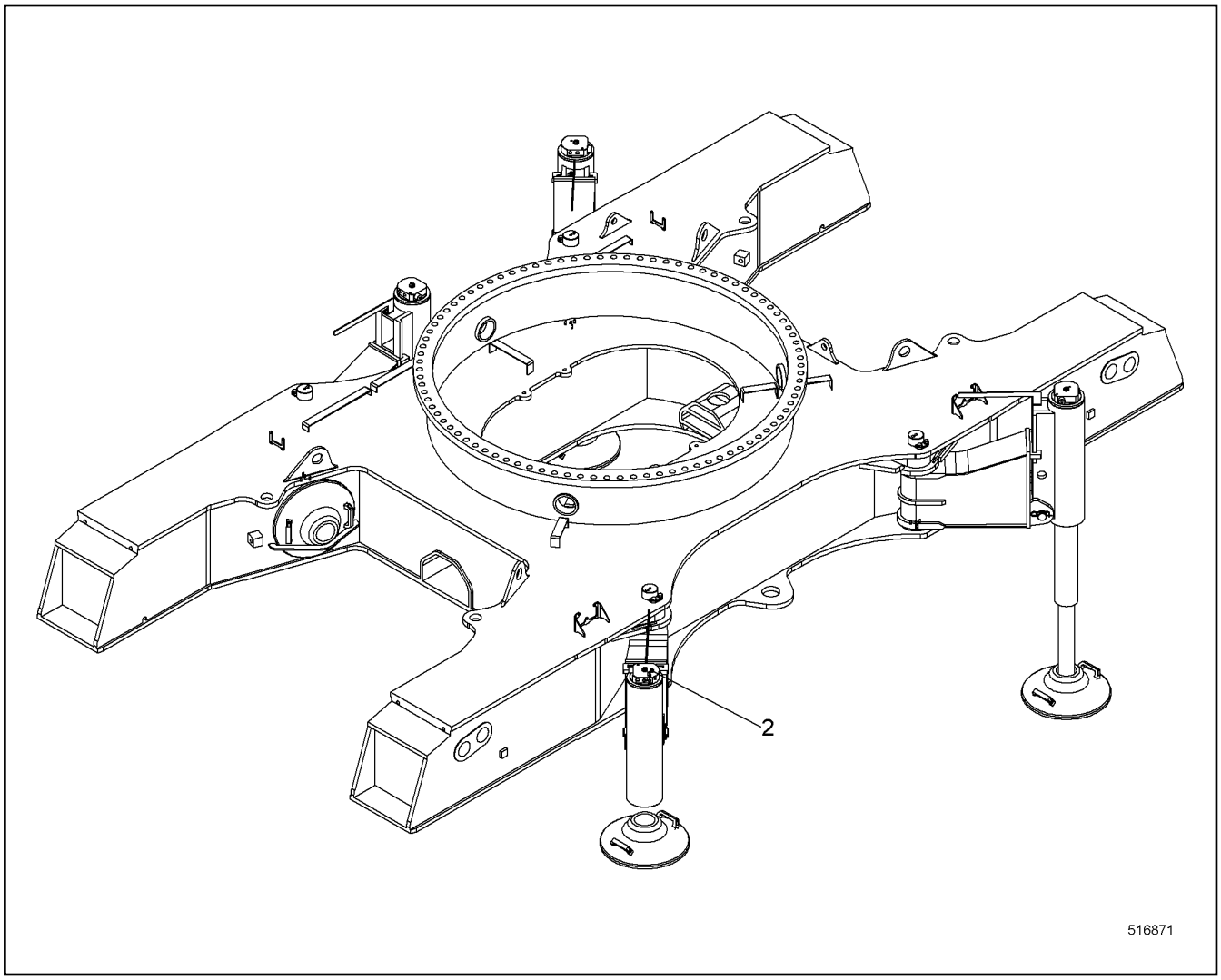

Pos.	Item	Quantity	Description	Bezeichnung	Serie	K
2	11235248	1	TUBING HYDR ⇨ ❑ 668	VERROHRUNG HYDR		

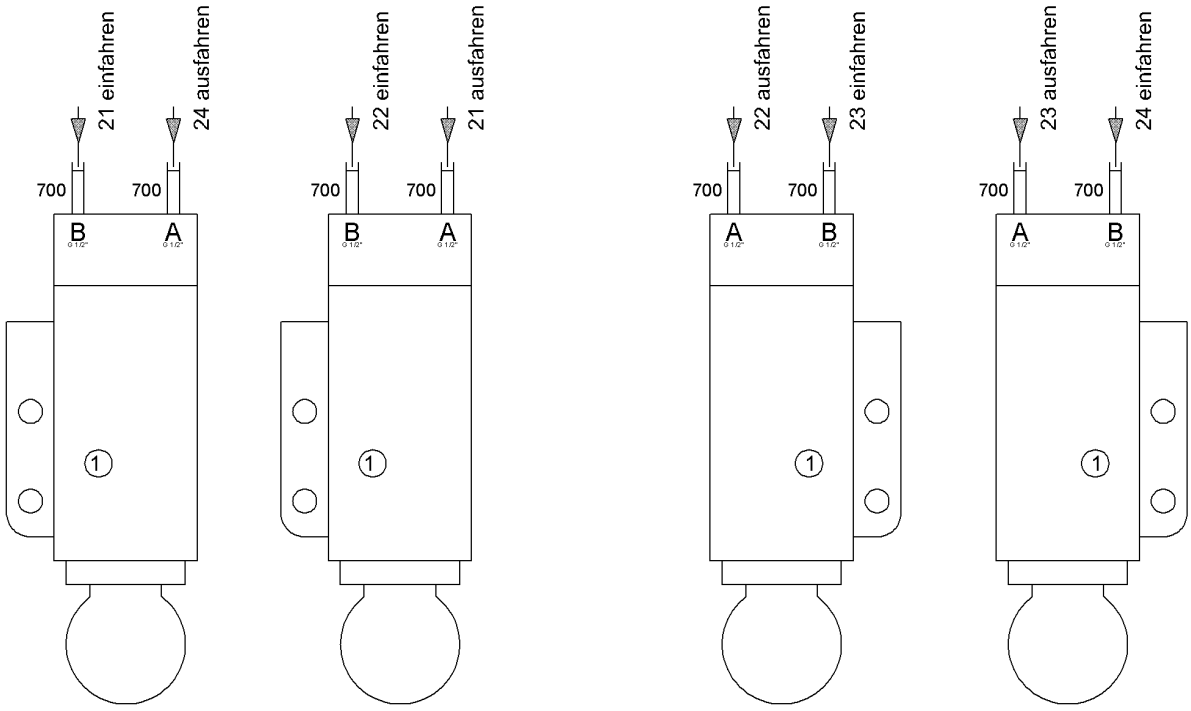

Pos.	Item	Quantity	Description	Bezeichnung	Serie	K
1	592182614	4	SUPPORT CYL ⇨ ❑ 669	ABSTUETZZYL		
605	477400414	8	FLANGE JOINT	VERSCHRAUBUNG		
606	477700514	8	FLANGE JOINT	VERSCHRAUBUNG		
700	471032608	8	FLANGE JOINT	VERSCHRAUBUNG		

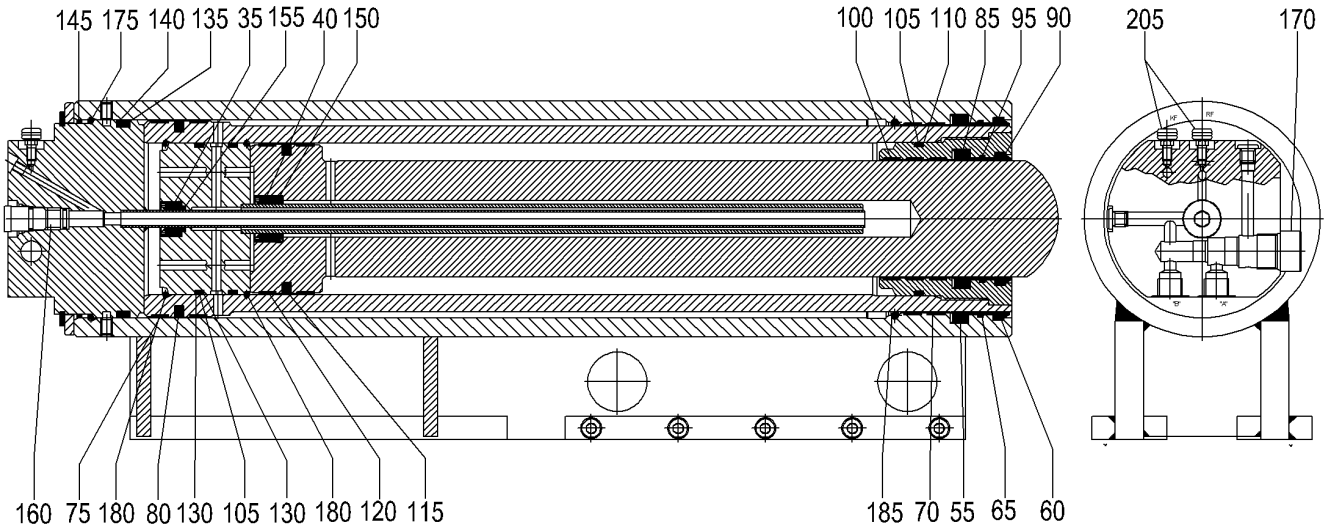

Pos.	Item	Quantity	Description	Bezeichnung	Serie	K
25	11289833	1	FLOOR	BODEN		
35	10352312	1	GUIDE BUSHING M30 X 1.5 X 15.1 X 18	FUEHRUNGSBUCHSE		
40	10352313	1	GUIDE BUSHING M40 X 1.5 X 25.1 X 24	FUEHRUNGSBUCHSE		
55	10352315	1	ROD SEAL	NUTRING		
60	10352319	1	SCRAPER	ABSTREIFER		
65	10352344	1	GUIDE RING	FUEHRUNGSRING		
70	10352349	2	GUIDE RING	FUEHRUNGSRING		
75	10352352	2	GUIDE RING	FUEHRUNGSRING		
80	10352353	1	PISTON PACKING SET	KOLBEN DS		
85	726308514	1	ROD SEAL	NUTRING		
90	749073614	1	SCRAPER	ABSTREIFER		
95	10352354	1	GUIDE RING	FUEHRUNGSRING		
100	726206214	3	GUIDE RING	FUEHRUNGSRING		
105	10352356	3	O-RING	O-RING		
110	10352355	1	BACKING RING	BACKRING		
115	10352357	1	PISTON PACKING SET	KOLBEN DS		
120	10351499	2	GUIDE RING	FUEHRUNGSRING		
130	10352359	4	BACKING RING	BACKRING		
135	10352361	1	O-RING	O-RING		
140	10352368	1	SUPPORTING RING	STUETZRING		
145	10352362	1	O-RING	O-RING		
150	10352364	1	LIFETIME SEAL	GLEITDICHTRING		
155	10352365	1	LIFETIME SEAL	GLEITDICHTRING		
160	11300790	1	LOWERING BRAKE VALVE	SENKBREMSVENTIL		
170	10352371	1	NON-RETURN VALVE	RUECKSCHLAGVENTIL		
175	10352382	1	SNAP RING 5X175	SPRENGRING		

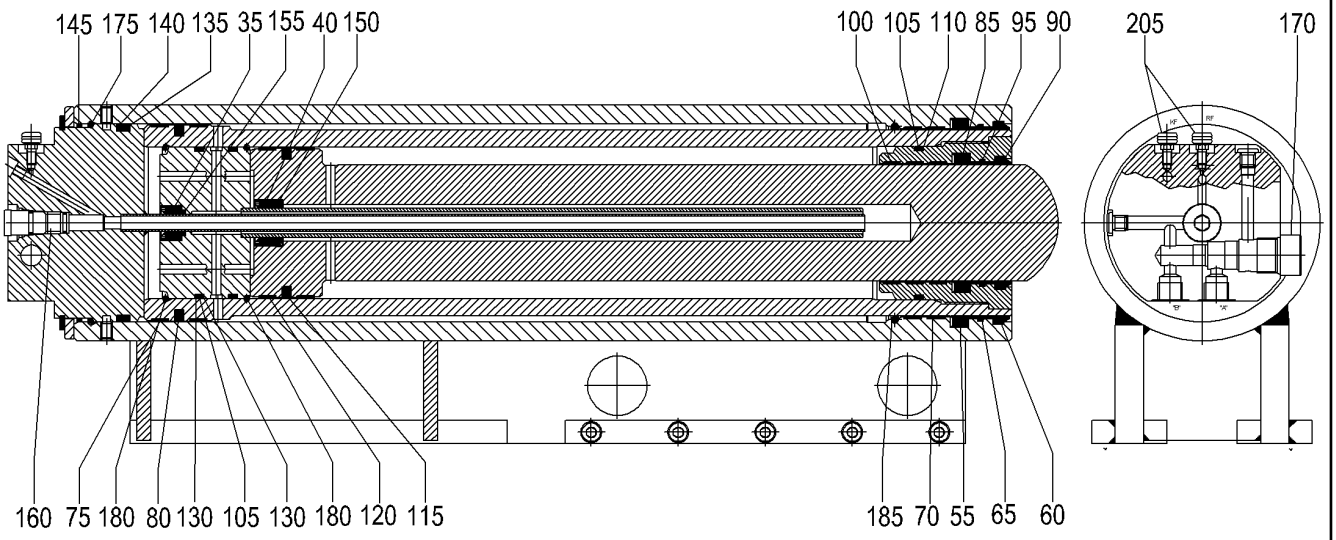

Pos.	Item	Quantity	Description	Bezeichnung	Serie	K
180	10352383	2	SNAP RING 5 X 135	SPRENGRING		
185	10352384	1	SNAP RING 6 X 172	SPRENGRING		
205	10351239	2	VENTILATION VALVE	ENTLUEFTUNGSVENTIL		

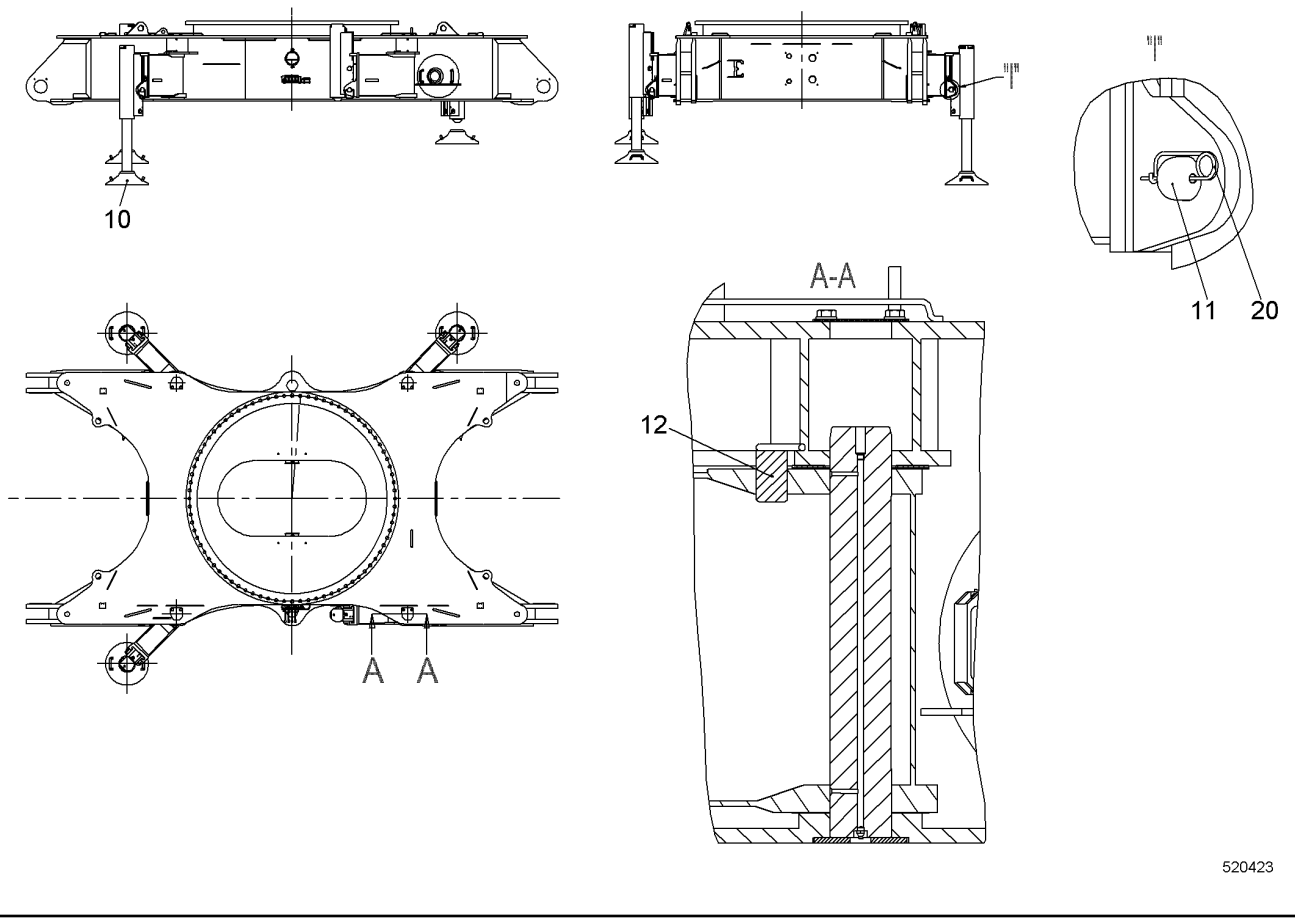

Pos.	Item	Quantity	Description	Bezeichnung	Serie	K
12	990759714	4	SUPPORT PLATE CPL	ABSTUETZPLATTE KPL		
13	11262110	4	PIN CPL	BOLZEN KPL		
14	959835714	4	PIN CPL	BOLZEN KPL		
30	433101208	4	RETAINING SPRING 4MM	SICHERUNGSFEDER		

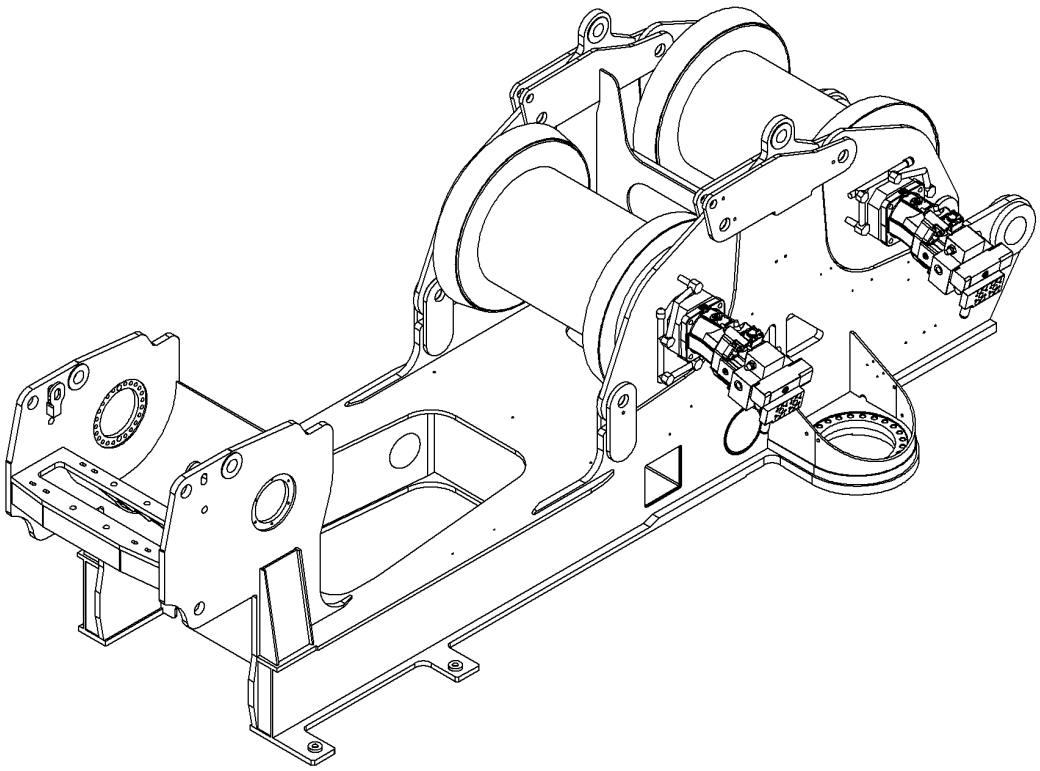

516201

Pos.	Item	Quantity	Description	Bezeichnung	Serie	K
2	10536351	1	SYNCHRONIZING HYDR RFK ⇨ ❑ 673	GLEICHLAUF HYDR NRS		
4	10536352	1	HOSE LIST ⇨ ❑ 675	SCHLAUCHLISTE		

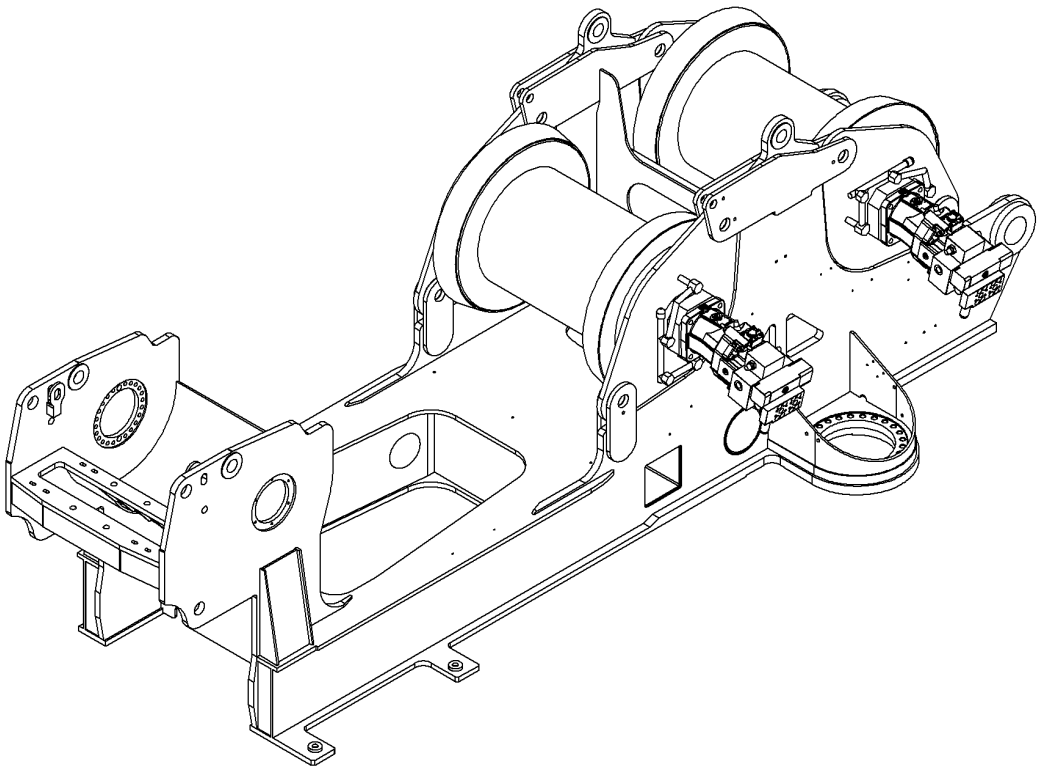

516202

Pos.	Item	Quantity	Description	Bezeichnung	Serie	K
2	10554594	1	TUBING HYDR ⇨ ❑ 674	VERROHRUNG HYDR		

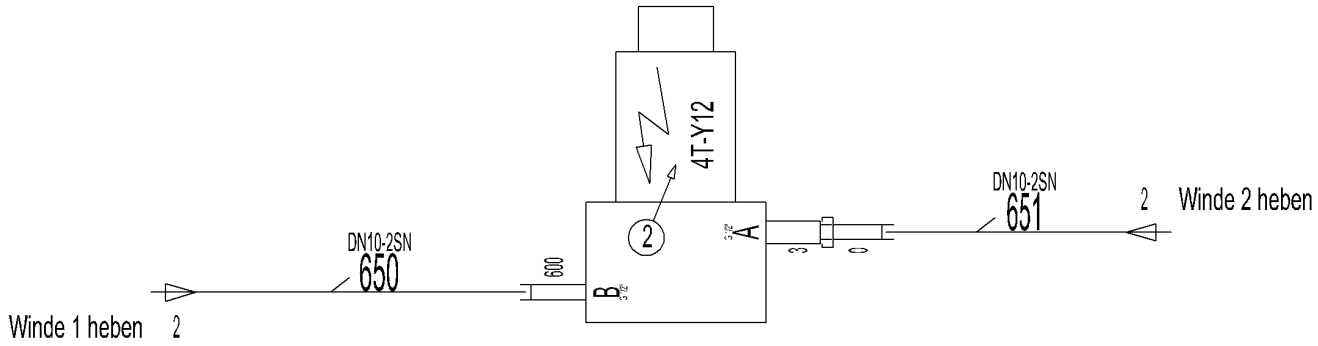

Pos.	Item	Quantity	Description	Bezeichnung	Serie	K
2	511480614	1	DIRECTIONAL CONTROL VALVE	WEGEVENTIL		
3	917906414	1	RESTRICTOR BODY	DROSSELKOERPER		
600	471032608	1	FLANGE JOINT	VERSCHRAUBUNG		
601	7617354	1	FLANGE JOINT	VERSCHRAUBUNG		

ACHTUNG !
ATTENTION !
ATTENTION !
ATENCIÓN !
ATENÇÃO !
ВНИМАНИЕ

Für Schlauchbestellungen kann über die Schlauchnummer, in der entsprechenden Schlauchliste, die Identnummer festgestellt werden.

For ordering flexible hoses you can find the identification number through the hose-number in the corresponding hose-list.

Pour des ordres de tuyau flexible le nombre d'identification on voit dans la liste de tuyau flexible correspondente.

Para el pedido de manguera, indicar el número de identificación de la manguera de la lista respectiva.

Para se encomendar uma mangueira, consulte o número de identificaçao na respectiva lista de mangueiras.

Для оформления заказов на шланги/рукавы идент. № может быть определен при помощи номера шланга/рукава, указанного в соотетствующем перечне шлангов/рукавов.

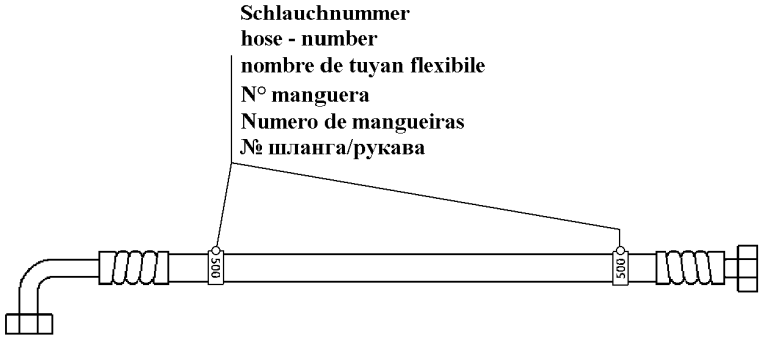

500000

Pos.	Item	Quantity	Description	Bezeichnung	Serie	K
1	10518558	2	ADHESIVE LABEL	HAFTETIKETTE		
650	993227714	1	HOSE CPL	SCHLAUCH KPL		
651	993759614	1	HOSE CPL	SCHLAUCH KPL		

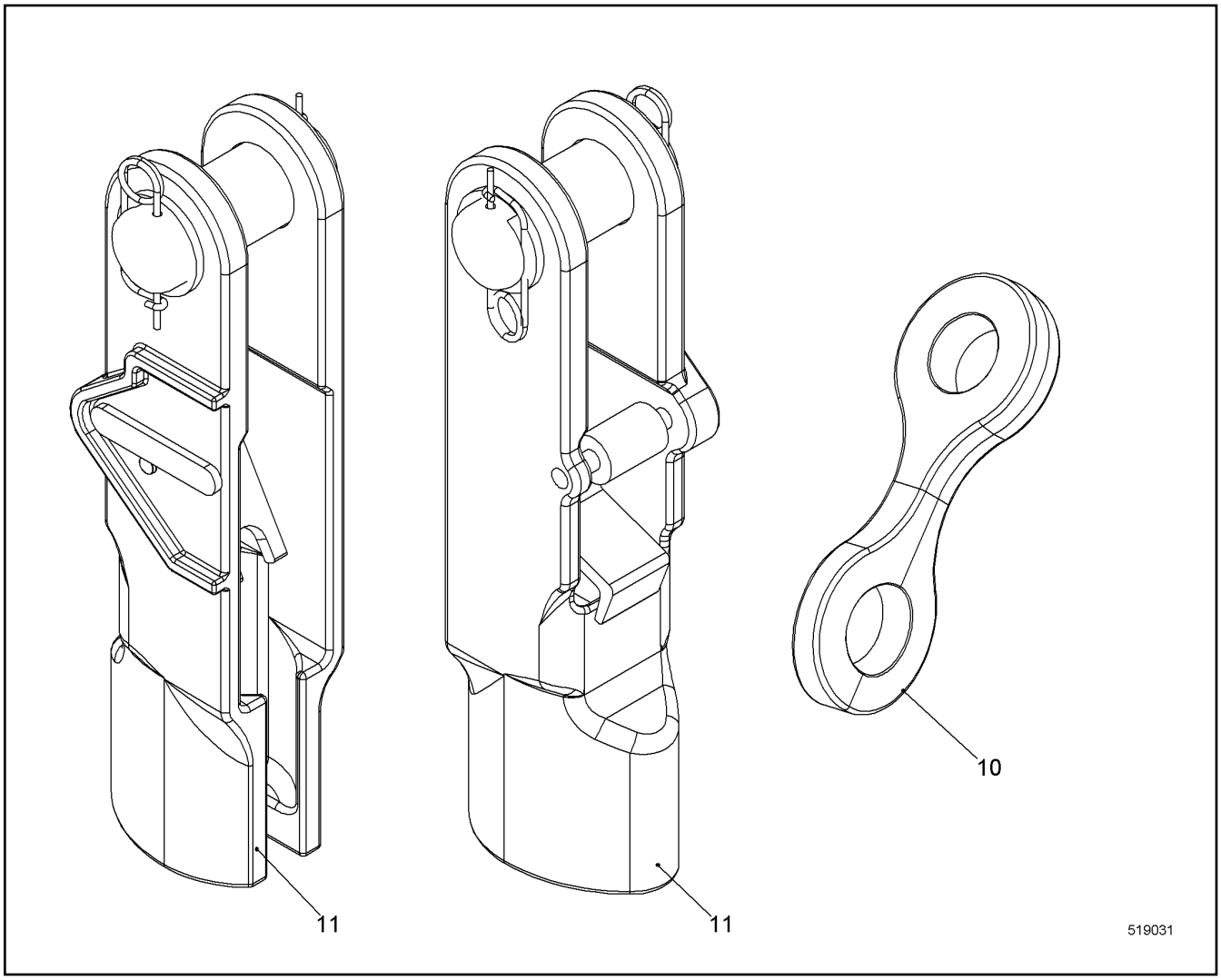

Pos.	Item	Quantity	Description	Bezeichnung	Serie	K
10	956507814	1	CROSS STRAP	KREUZLASCHE		
11	11236233	1	POCKET LOCK ⇨ ❑ 677	TASCHENSCHLOSS		

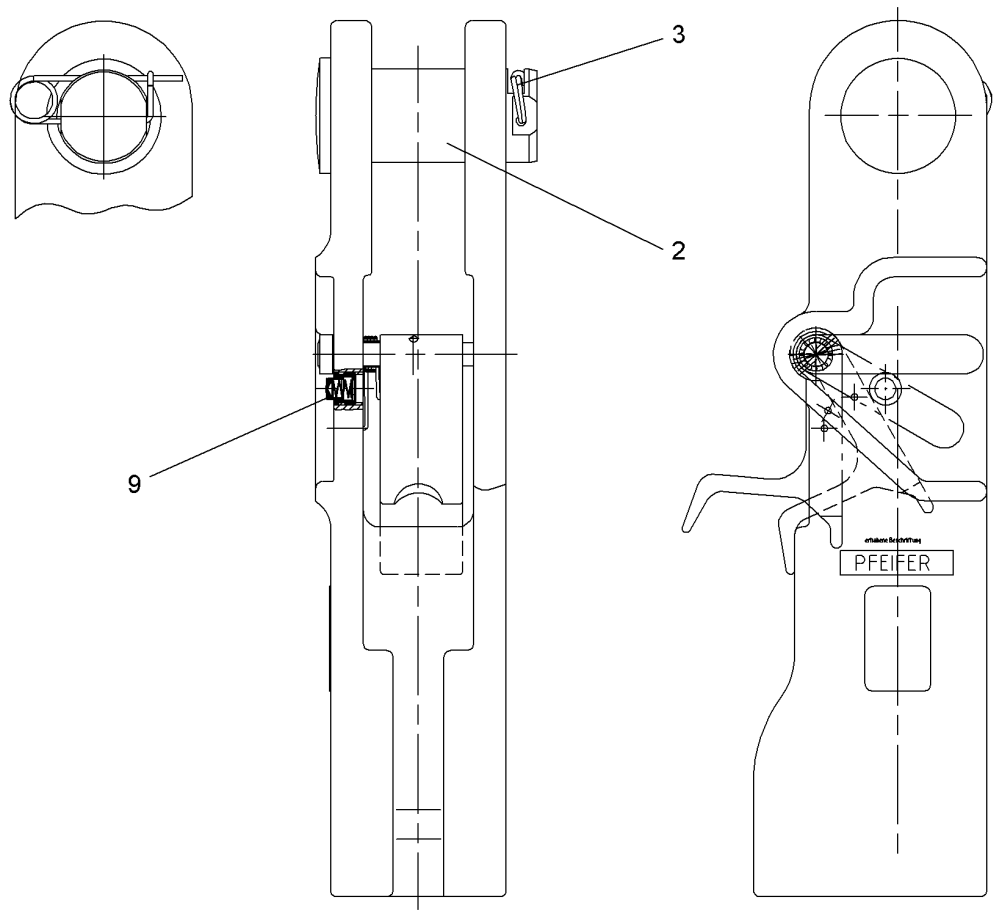

Pos.	Item	Quantity	Description	Bezeichnung	Serie	K
2	11297460	1	COLLER BOLT	BUNDBOLZEN		
3	11297461	1	RETAINING SPRING 3MM	SICHERUNGSFEDER		
6	11306379	1	SPIRAL DOWEL PIN DIN 7344 5.0X26	SPIRALSPANNSTIFT		
9	10504994	1	BUTTON	KNOPF		

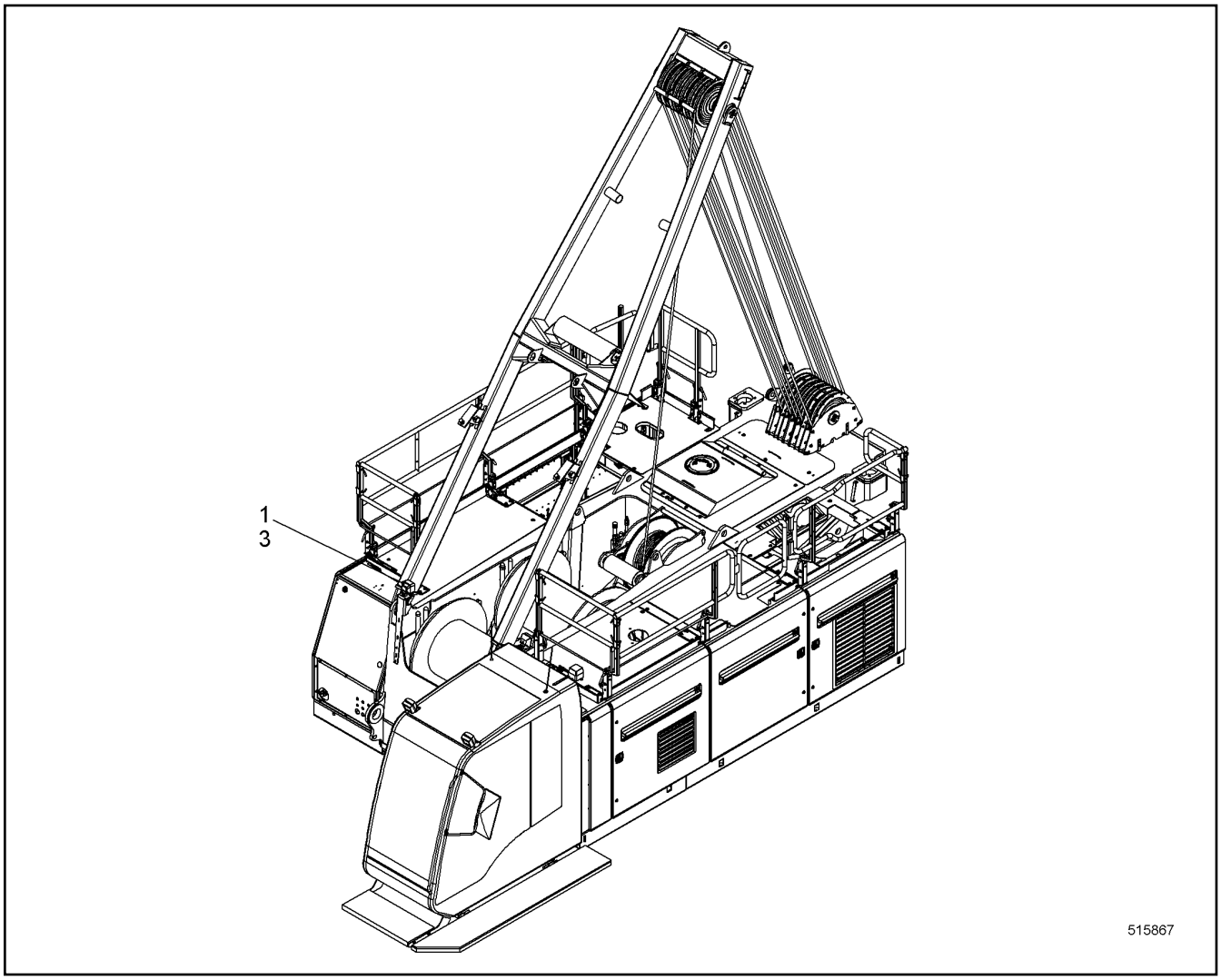

Pos.	Item	Quantity	Description	Bezeichnung	Serie	K
1	11223442	1	CAMERA INSTALLATION ⇨ ❑ 679	KAMERA EINBAU		
3	10507750	1	CAMERA MONITORING ⇨ ❑ 681	KAMERAUEBERWACHUNG		

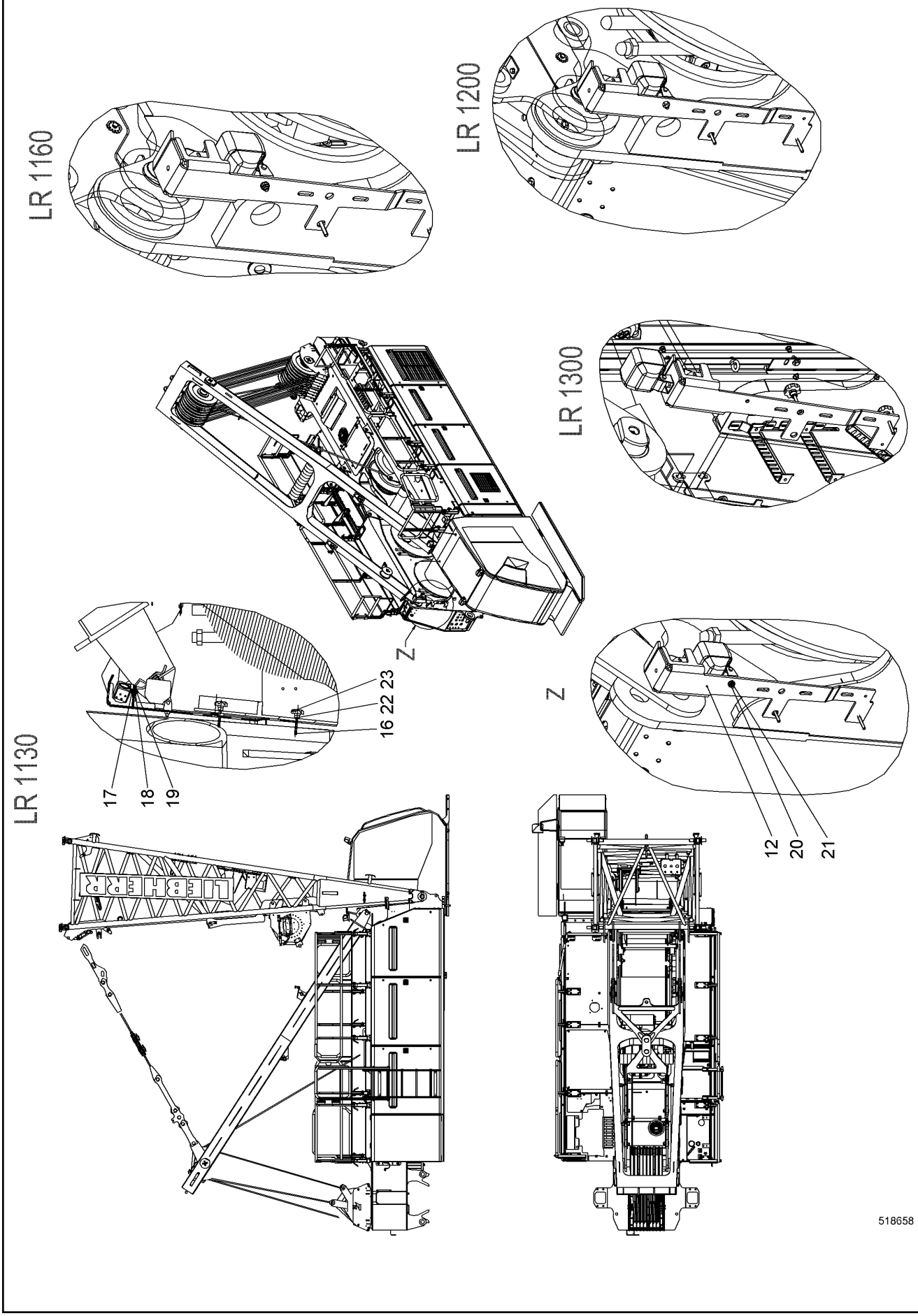

8.7.2015 518658 LIEBHERR	**138281_ETK_001** **CAMERA INSTALLATION** **KAMERA EINBAU**	679 (1/2) **11 22 344 2**

Pos.	Item	Quantity	Description	Bezeichnung	Serie	K
12	11223490	1	HOLDER ST.CONST.	HALTER SCHWK		
16	11240099	2	THREADED ROD	GEWINDESTANGE		
17	406532614	3	HEX SCREW ISO 4017 M6X20 A4-70	SECHSKANTSCHRAUBE		
18	420000414	6	WASHER ISO 7089 6 A4	SCHEIBE		
19	10540492	3	HEX NUT ISO 10511 M6 A4	SECHSKANTMUTTER		
20	406518714	1	HEX SCREW ISO 4017 M10X20 A4-70	SECHSKANTSCHRAUBE		
21	10540494	1	HEX NUT ISO 10511 M10 A4	SECHSKANTMUTTER		
22	10536577	2	LOCK WASHER 8 254 SMO;EN 10088-3	SICHERUNGSSCHEIBE		
23	11242422	2	STAR GRIP	STERNGRIFF		

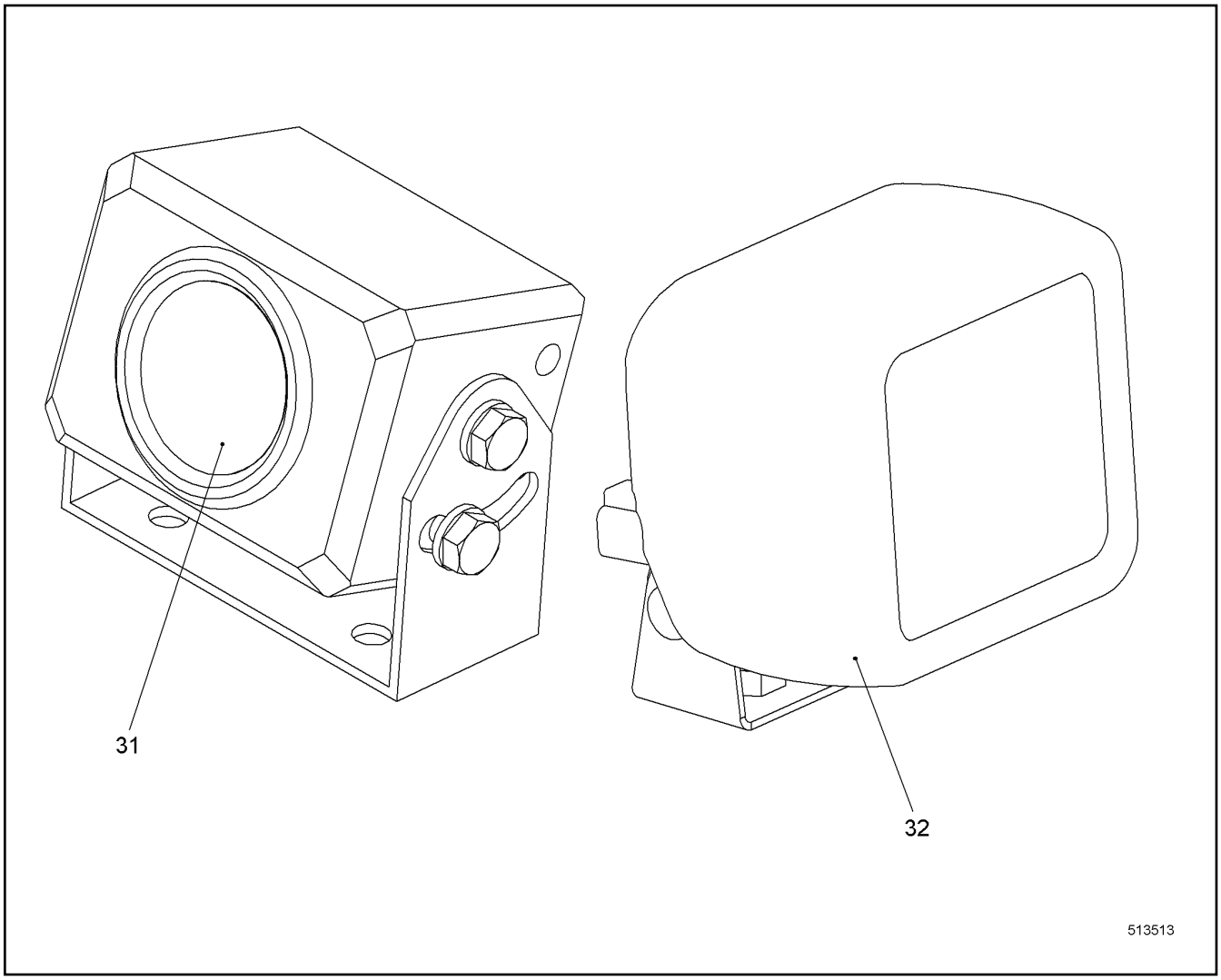

Pos.	Item	Quantity	Description	Bezeichnung	Serie	K
31	10024012	1	CAMERA CCD	KAMERA CCD		
32	7027205	1	WORK LIGHT ⇨ ❑ 32	ARBEITSSCHEINWERFER		

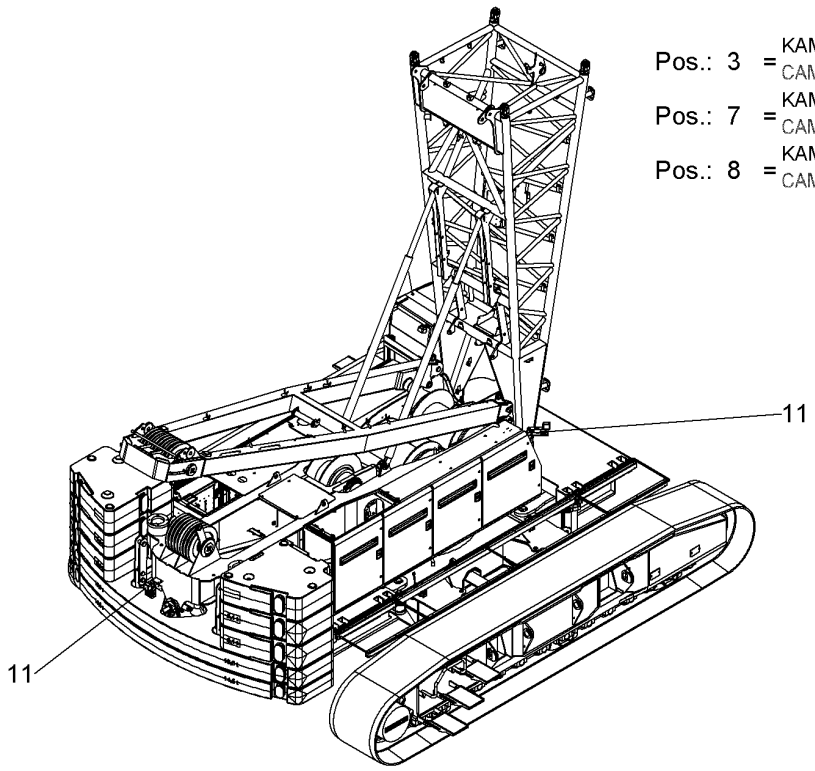

Pos.	Item	Quantity	Description	Bezeichnung	Serie	K
3	11893352	1	CAMERA MONITORING	KAMERAUEBERWACHUNG		
7	10532461	1	CAMERA MONITORING ⇨ ❑ 683	KAMERAUEBERWACHUNG		
8	10507750	1	CAMERA MONITORING ⇨ ❑ 681	KAMERAUEBERWACHUNG		
11	10580647	1	VIDEO MONITORING SYSTEM RFK ⇨ ❑ 685	VIDEOUEBERWACHUNGSANLAG		

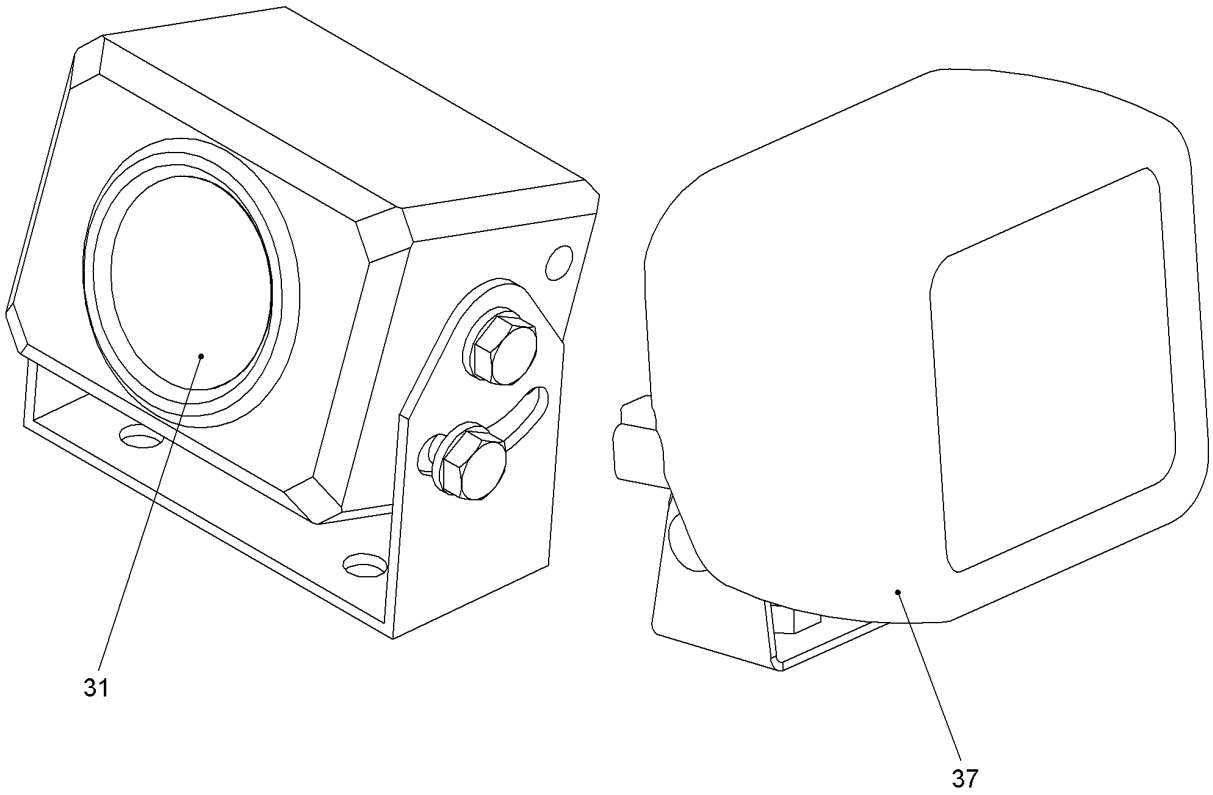

Pos.	Item	Quantity	Description	Bezeichnung	Serie	K
31	10024012	1	CAMERA CCD	KAMERA CCD		
37	7027205	1	WORK LIGHT ⇨ ❑ 32	ARBEITSSCHEINWERFER		
50	10533524	1	CABIN EL ⇨ ❑ 684	KABINE EL		

OHNE BILD
WITHOUT ILLUSTRATION
SANS PLANCHE
SIN FIG.
SEM ILUSTRAÇÃO
БЕЗ ИЗОБРАЖЕНИЯ

600000

Pos.	Item	Quantity	Description	Bezeichnung	Serie	K
1	11240503	1	MONITOR LCD	MONITOR LCD		
3	11240499	1	CABLE	KABEL		
4	10286648	1	BALL JOINT	KUGELGELENK		

LIEBHERR

8.7.2015
520297

138281_ETK_001

VIDEO MONITORING SYSTEM RFK
VIDEOUEBERWACHUNGSANLAGE NRS

685 (1/2)

10 58 064 7

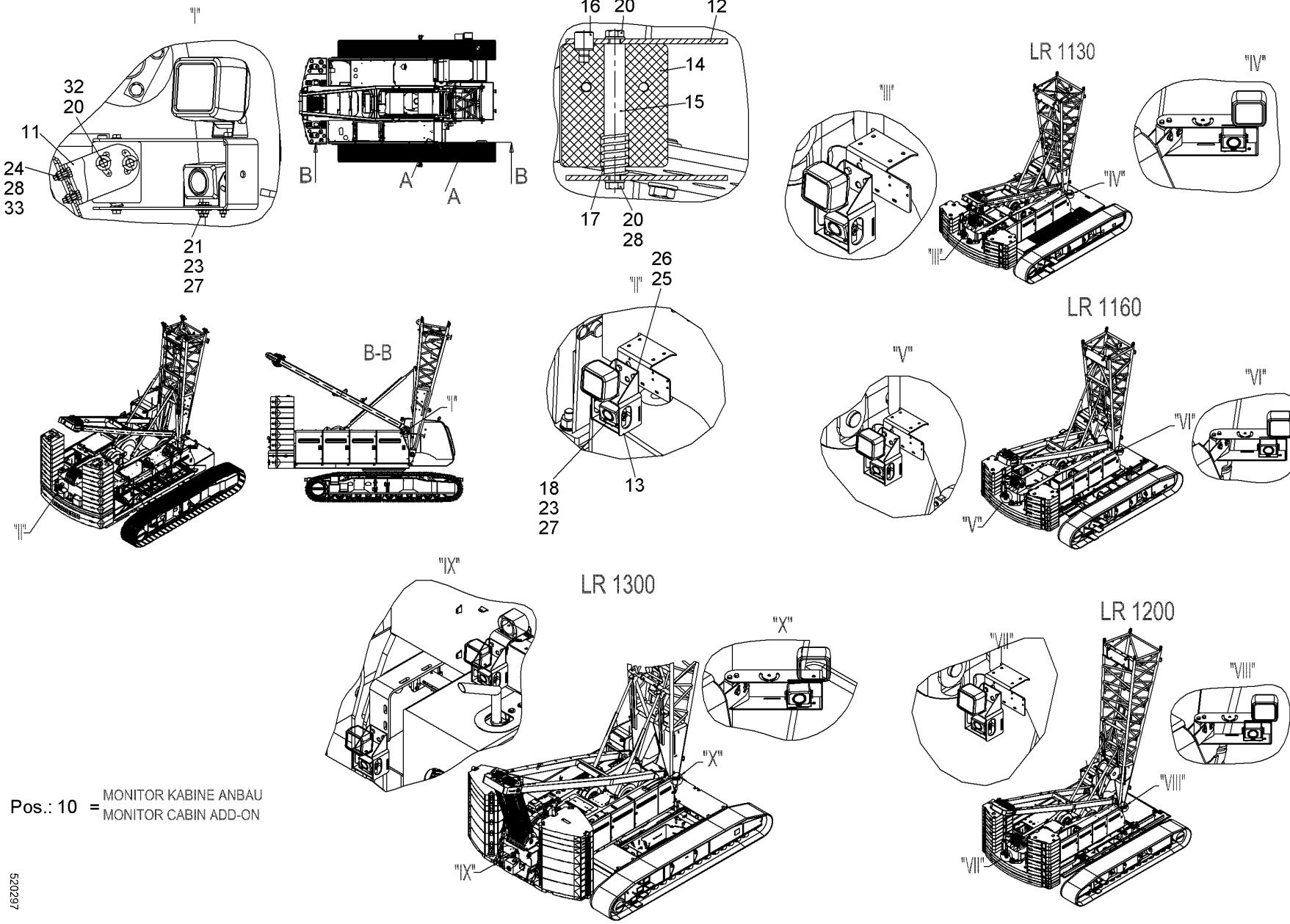

Pos.: 10 = MONITOR KABINE ANBAU
MONITOR CABIN ADD-ON

520297

Pos.	Item	Quantity	Description	Bezeichnung	Serie	K
10	10578486	1	MONITOR CABIN ADD-ON ⇨ ❑ 687	MONITOR KABINE ANBAU		
11	10529071	1	PLATE	BLECH		
12	10529074	1	PLATE	BLECH		
13	385137114	1	HOLDER CAMERA	HALTER KAMERA		
14	10529080	1	TWIST PIVOT	DREHGELENK		
15	10529084	1	PIN	BOLZEN		
16	10529086	1	PIN	BOLZEN		
17	10529089	1	PRESSURE SPRING	DRUCKFEDER		
18	406501714	3	HEX SCREW ISO 4017 M6X16 A4-70	SECHSKANTSCHRAUBE		
20	406518814	6	HEX SCREW ISO 4017 M8X20 A4-70	SECHSKANTSCHRAUBE		
21	406532614	3	HEX SCREW ISO 4017 M6X20 A4-70	SECHSKANTSCHRAUBE		
23	10540492	6	HEX NUT ISO 10511 M6 A4	SECHSKANTMUTTER		
24	10540493	2	HEX NUT ISO 10511 M8 A4	SECHSKANTMUTTER		
25	420001514	2	WASHER ISO 7089 12 A4	SCHEIBE		
26	10540495	2	HEX NUT ISO 10511 M12 A4	SECHSKANTMUTTER		
27	10540500	9	WASHER ISO 7093-1 6 A4	SCHEIBE		
28	420001014	6	WASHER ISO 7089 8 A4	SCHEIBE		
32	10540510	4	WASHER ISO 7093-1 8 A4	SCHEIBE		
33	406501414	2	HEX SCREW ISO 4017 M8X25 A4-70	SECHSKANTSCHRAUBE		

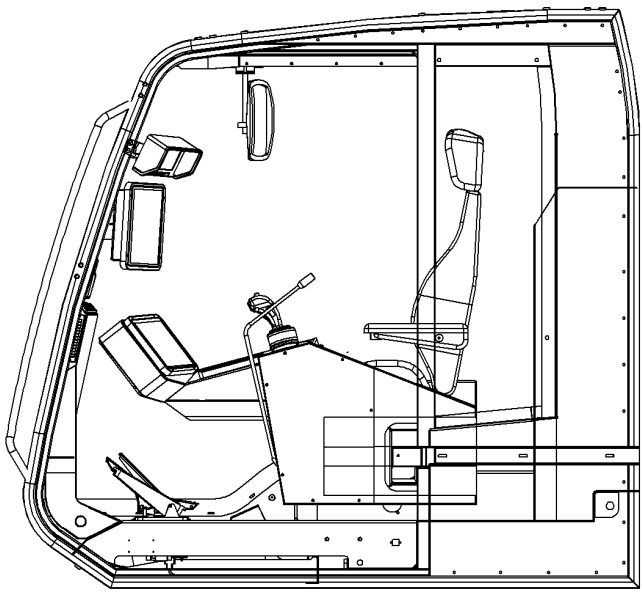

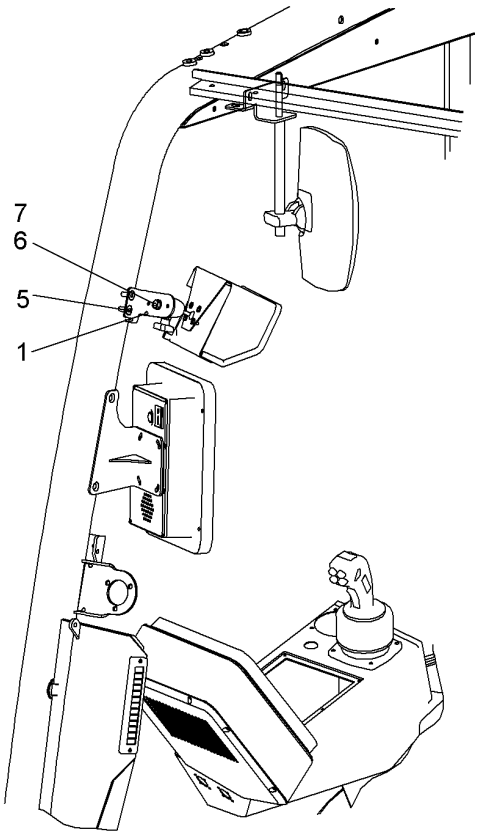

515129

Pos.	Item	Quantity	Description	Bezeichnung	Serie	K
1	10527391	1	HOLDER	HALTER		
5	408606214	2	COUNTERSUNK SCREW DIN 7991 M8X20 A4-7	SENKSCHRAUBE		
6	406501514	1	HEX SCREW ISO 4017 M8X16 A4-70	SECHSKANTSCHRAUBE		
7	420001014	1	WASHER ISO 7089 8 A4	SCHEIBE		

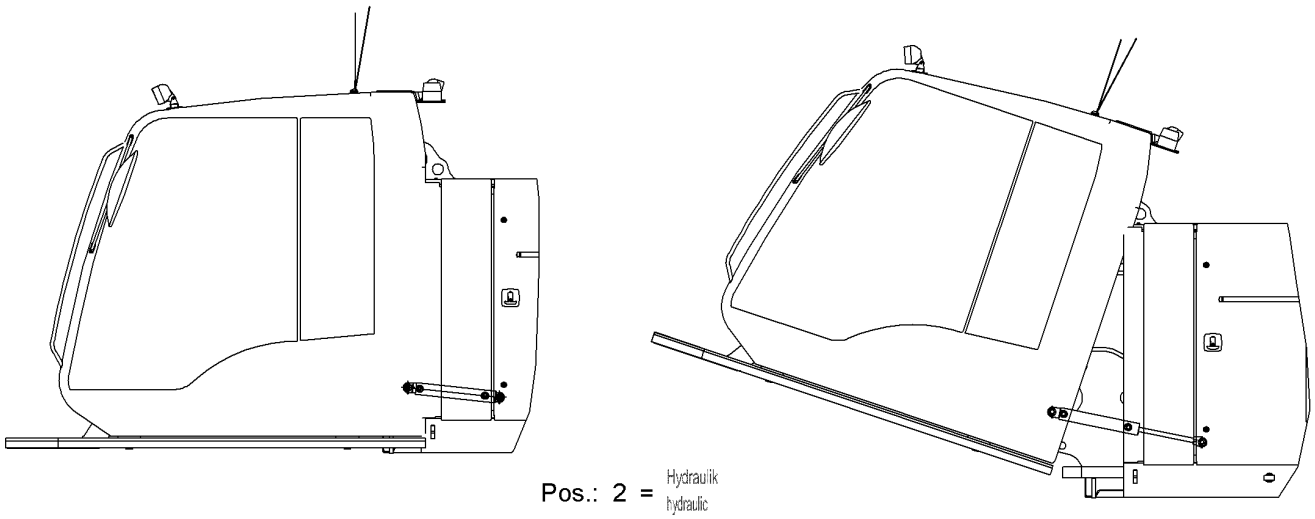

Pos.	Item	Quantity	Description	Bezeichnung	Serie	K
2	10517281	1	TUBING HYDR ⇨ ❑ 689	VERROHRUNG HYDR		
3	10531224	1	CABIN INCLINATION EL RFK	KABINENNEIGUNG EL NRS		
10		-1	TURNBUCKLE	SPANNSCHLOSS		

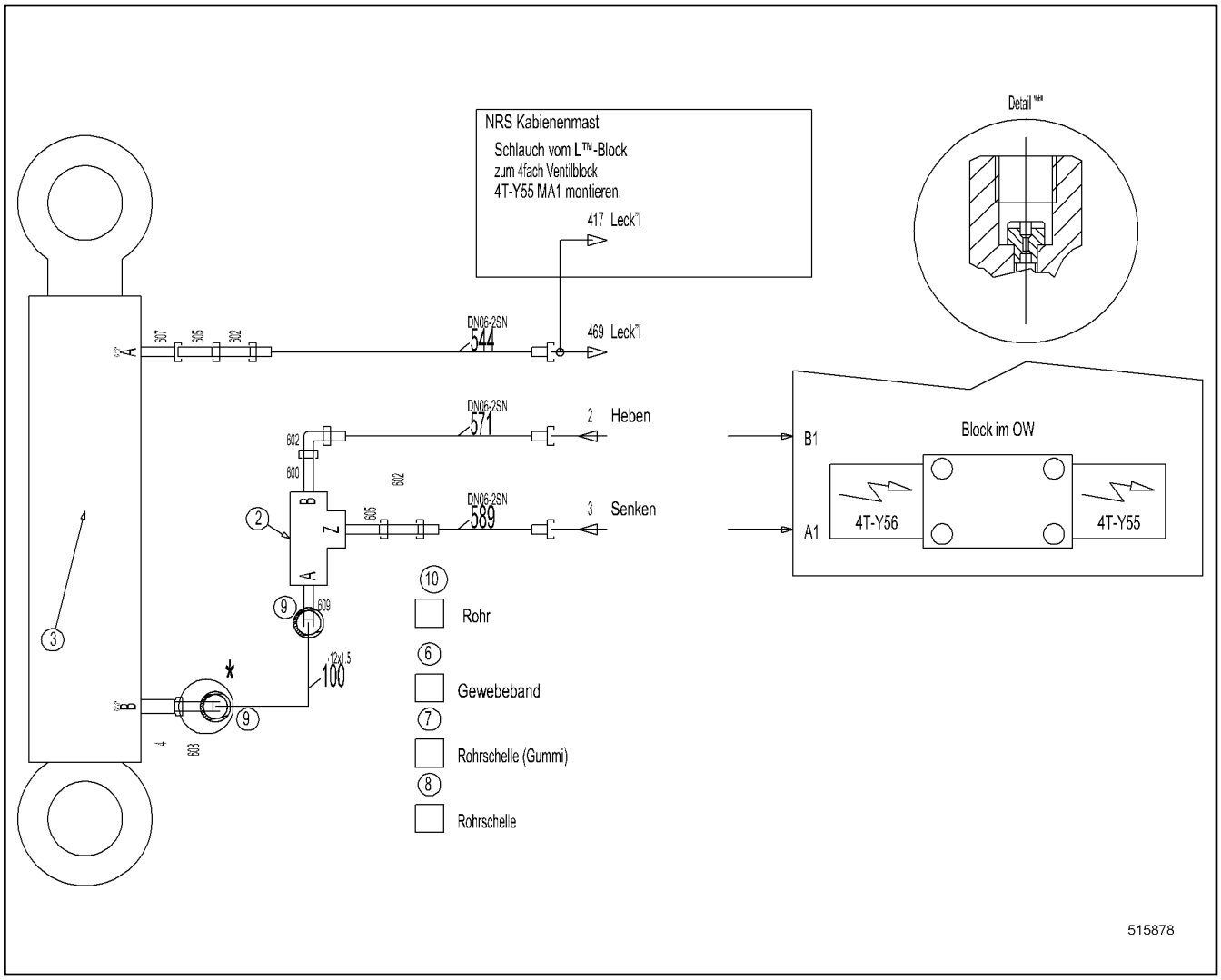

Pos.	Item	Quantity	Description	Bezeichnung	Serie	K
2	510466114	1	PILOT CONTROLLED CHECK VALVE	RUECKSCHLAGVENTIL ENTSPE		
3	592000814	1	DOUBLE-ACTING CYL ⇨ ❑ 690	DOPPELWIRKZYL		
4	917906414	1	RESTRICTOR BODY	DROSSELKOERPER		
5	714001914	1	MAIN JET SOLEX 0.8MM	HAUPTDUESE SOLEX		
7	10579877	1	PIPE CLAMP	ROHRSCHELLE		
8	774214308	1	HOSE CLAMP	SCHLAUCHSCHELLE		
9	790230014	2	SEAL	DICHTUNG		
10	10588224	1	PIPE SET	ROHRSATZ		
600	471032808	1	FLANGE JOINT	VERSCHRAUBUNG		
602	7617268	3	FLANGE JOINT	VERSCHRAUBUNG		
605	471004514	2	FLANGE JOINT	VERSCHRAUBUNG		
607	247042402	1	FLANGE JOINT	VERSCHRAUBUNG		
608	7617354	1	FLANGE JOINT	VERSCHRAUBUNG		
609	471032708	1	FLANGE JOINT	VERSCHRAUBUNG		

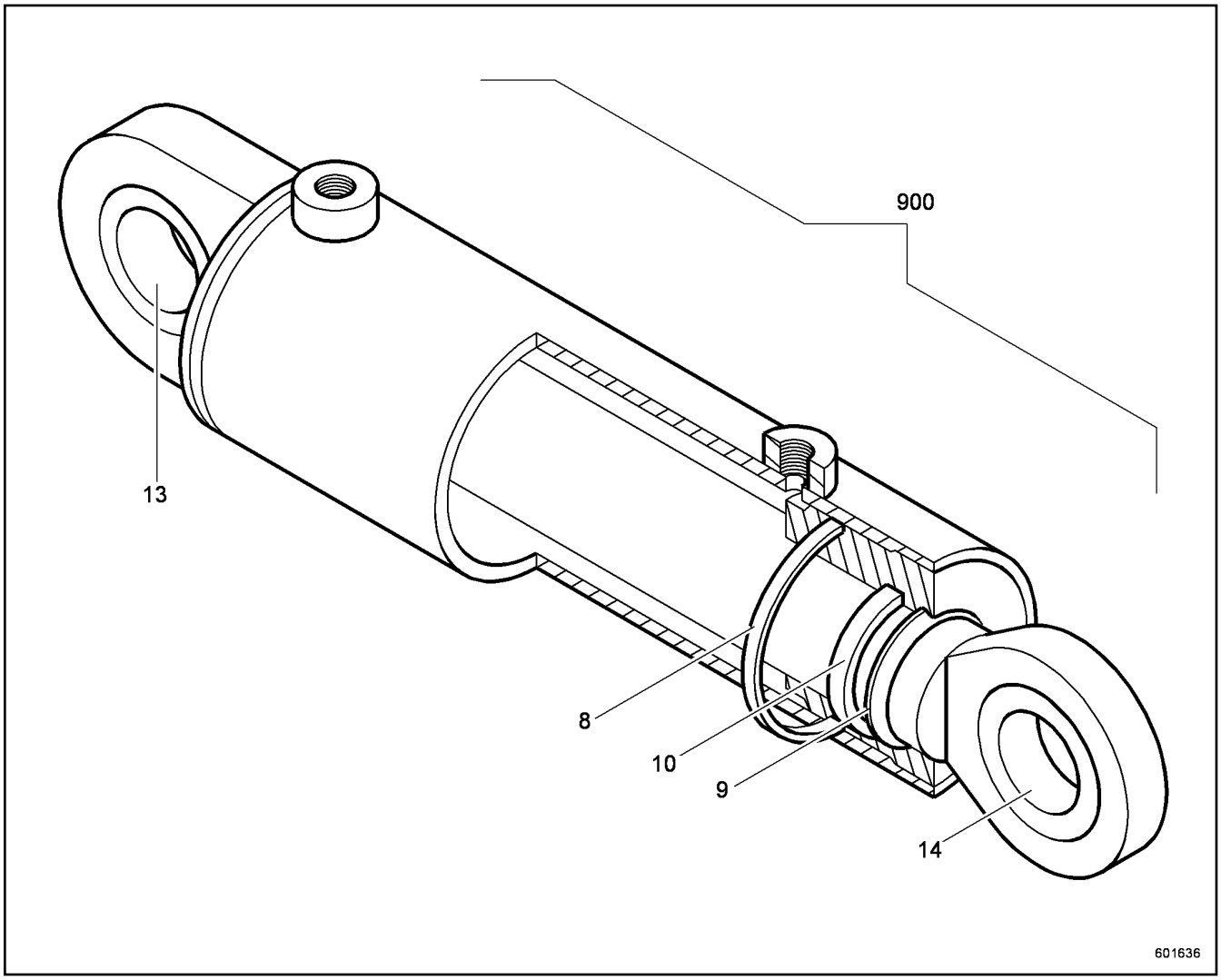

Pos.	Item	Quantity	Description	Bezeichnung	Serie	K
8	726456914	1	O-RING	O-RING		
9	592031814	1	SCRAPER	ABSTREIFER		
10	726306414	1	ROD SEAL	NUTRING		
13	746925314	1	SPHERICAL BEARING	GELENKLAGER		
14	746925314	1	SPHERICAL BEARING	GELENKLAGER		
900	790230614	1	SEALING SET CPL CYL	DS KPL ZYL		

OHNE BILD
WITHOUT ILLUSTRATION
SANS PLANCHE
SIN FIG.
SEM ILUSTRAÇÃO
БЕЗ ИЗОБРАЖЕНИЯ

600000

Pos.	Item	Quantity	Description	Bezeichnung	Serie	K
2	10043633	1	DRIVERS SEAT AIR-SUSPENDET ⇨ ❑ 692	FAHRERSITZ LUFTGEFEDERT		
3	992147314	1	DRIVERS SEAT EL RFK ⇨ ❑ 695	FAHRERSITZ EL NRS		
4	7023347	1	WAGON CHASSIS CPL	WAGENKASTEN KPL		
5	406501314	4	HEX SCREW ISO 4017 M8X30 A4-70	SECHSKANTSCHRAUBE		

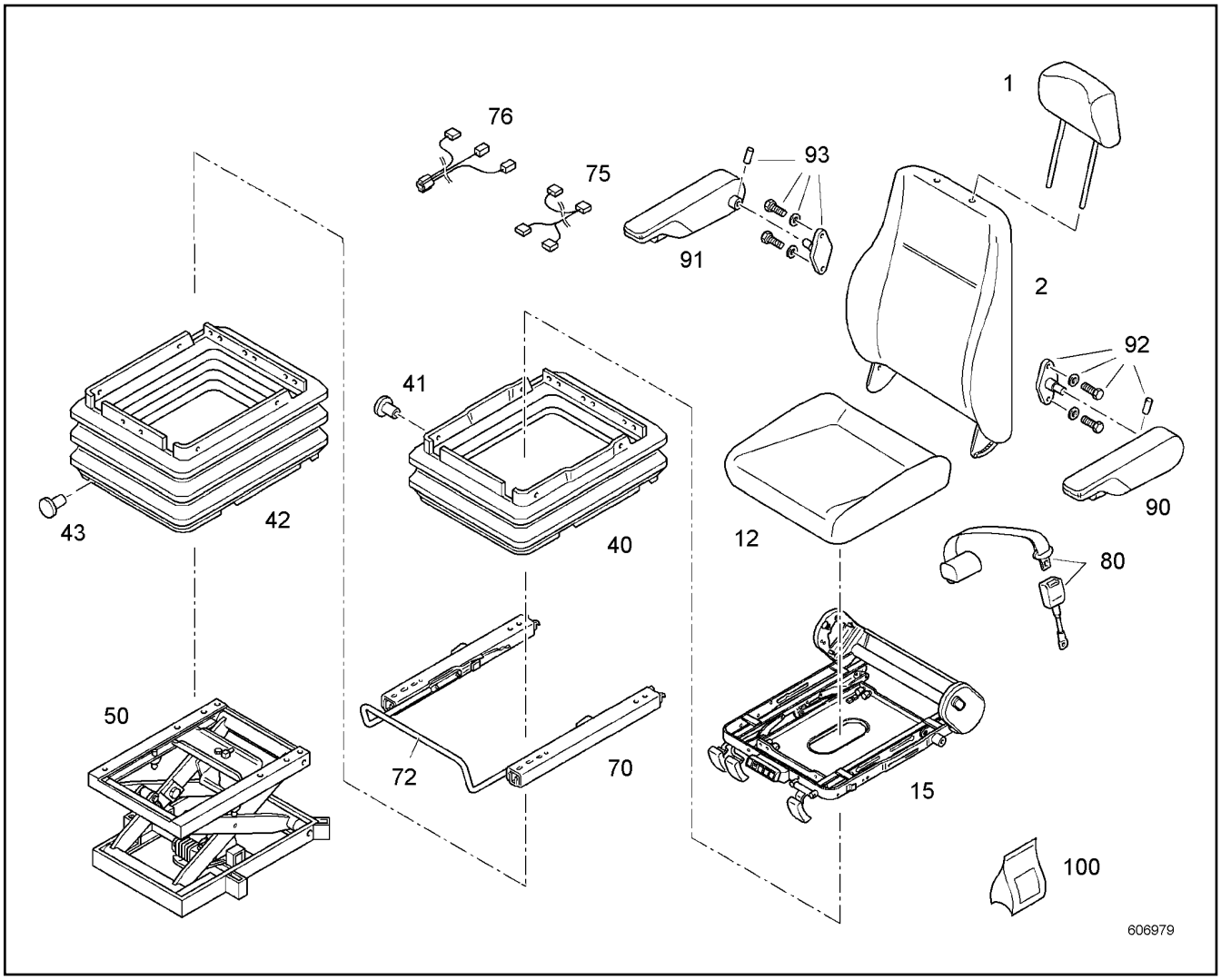

Pos.	Item	Quantity	Description	Bezeichnung	Serie	K
1	7370221	1	HEAD REST	KOPFSTUETZE		
2	10289987	1	BACK PART	RUECKENTEIL		
12	7027139	1	SEAT PART CPL	SITZTEIL KPL		
15	7028516	1	SEAT FRAME ⇨ ❑ 693	SITZRAHMEN		
40	10289978	1	RUBBER BELLOWS	FALTENBALG		
41	10289973	1	FIXING PARTS	BEFESTIGUNGSTEILE		
42	10289977	1	RUBBER BELLOWS	FALTENBALG		
43	10289974	1	FIXING PARTS	BEFESTIGUNGSTEILE		
50	10289992	1	VIBRATING SYSTEM ⇨ ❑ 694	SCHWINGSYSTEM		
70	10289991	1	SLIDE SEAT GUIDE	SCHIEBESITZFUEHRUNG		
72	10289976	1	BRACKET	BUEGEL		
75	10289980	1	CABLE LOOM	KABELSATZ		
76	10289981	1	CABLE LOOM	KABELSATZ		
80	7371746	1	HIP BELT	BECKENGURT		
90	10036948	1	ARM REST LEFT	ARMLEHNE LINKS		
91	10036949	1	ARM REST RIGHT	ARMLEHNE RE		
92	10014275	1	MOUNTING PARTS	MONTAGETEILE		
93	10014276	1	MOUNTING PARTS	MONTAGETEILE		
100	10289984	1	REPAIR KIT	REPARATURSATZ		

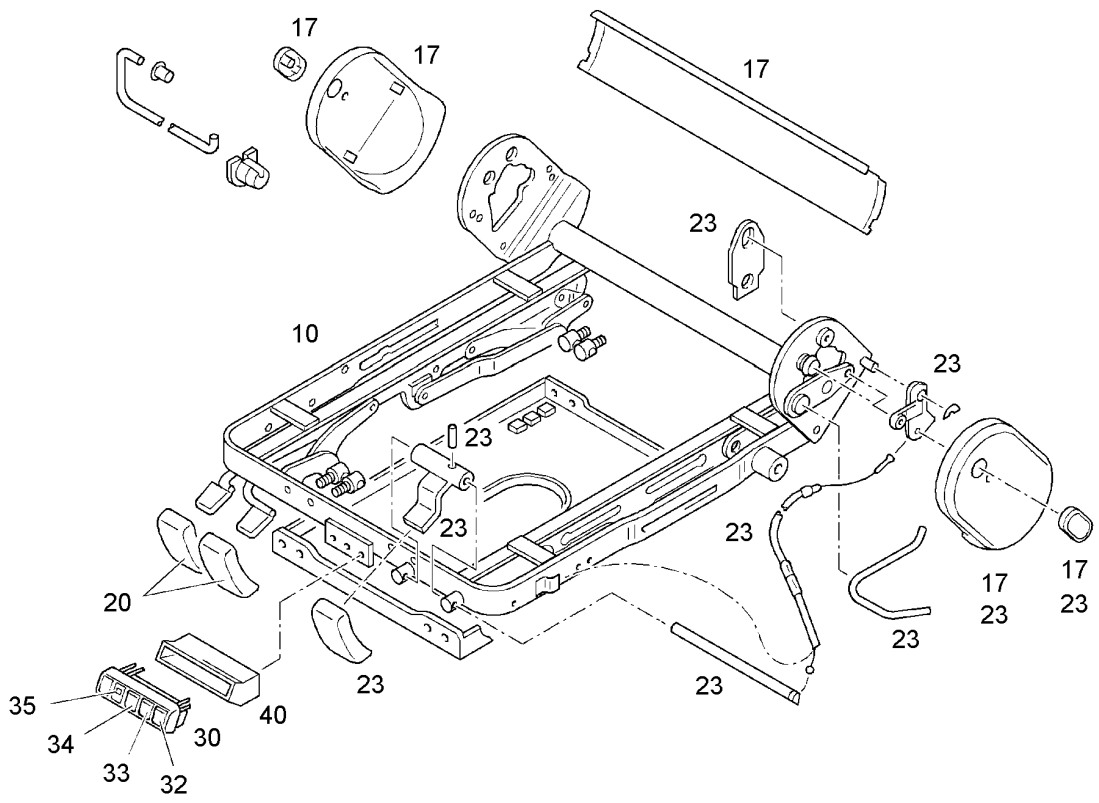

Pos.	Item	Quantity	Description	Bezeichnung	Serie	K
10	7029878	1	SEAT FRAME	SITZRAHMEN		
17	10036950	2	COVER LID	ABDECKKAPPE		
20	7025006	2	GRIP	GRIFF		
23	7025007	1	LATCHING DEVICE CPL	RASTVORRICHTUNG KPL		
30	7028257	1	OPERATION	BETAETIGUNG		
32	7025990	1	VALVE ROCKER PRINTED	VENTILWIPPE		
33	7025991	1	VALVE ROCKER PRINTED	VENTILWIPPE		
34	7025992	1	VALVE ROCKER PRINTED	VENTILWIPPE		
35	10013575	1	SWITCH	SCHALTER		
40	7027989	1	HOUSING	GEHAEUSE		

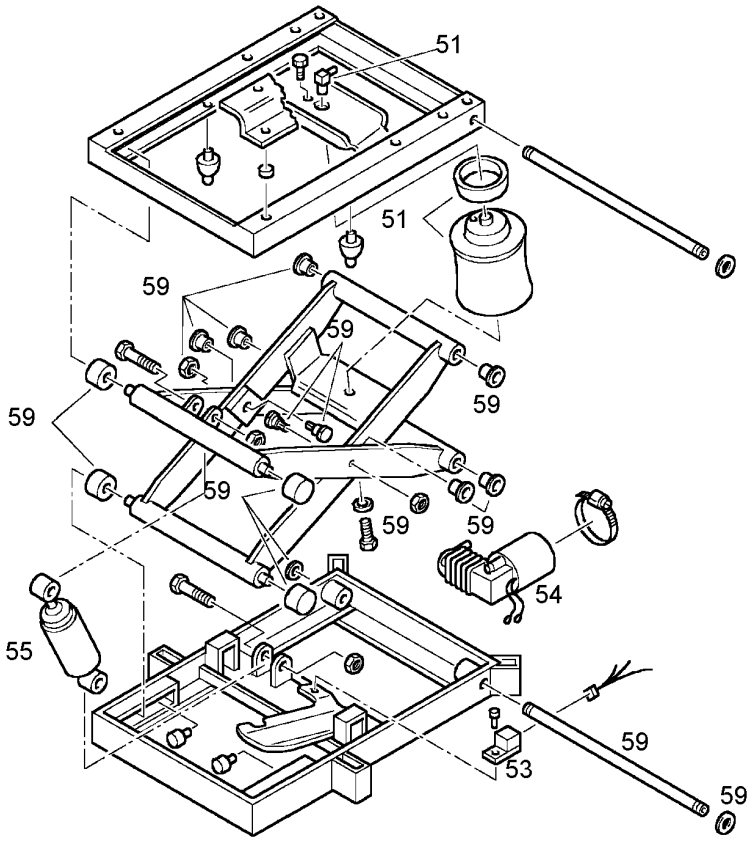

Pos.	Item	Quantity	Description	Bezeichnung	Serie	K
51	10289982	1	PNEUMATIC SPRING	LUFTFEDER		
53	6202973	1	RELAY	RELAIS		
54	7415342	1	COMPRESSOR	KOMPRESSOR		
55	10289994	1	SHOCK ABSORBER	STOSSDAEMPFER		
59	7025010	1	BEARING	LAGER		

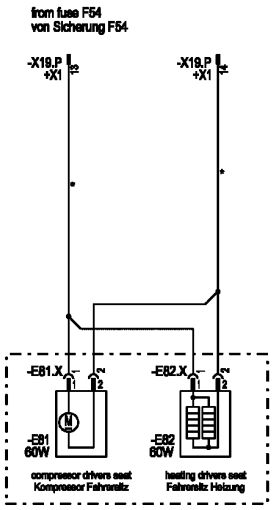

drivers seat
Fahrersitz

509809

Pos.	Item	Quantity	Description	Bezeichnung	Serie	K
11	10564279	1	WIRING HARNESS ⇨ ❑ 696	KABELSTRANG		

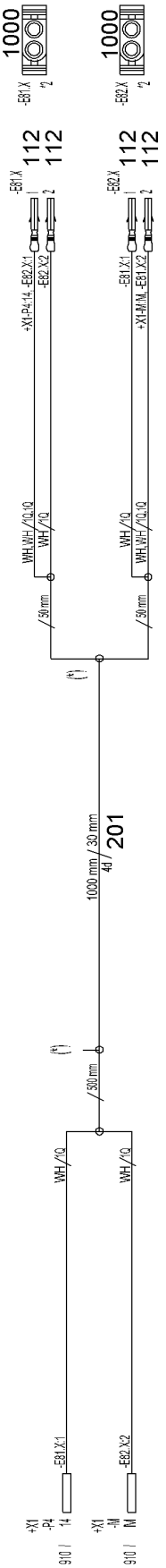

515044

8.7.2015 515044 LIEBHERR	**138281_ETK_001** **WIRING HARNESS** **KABELSTRANG**	❑ 696 (1/2) **10 56 427 9**

Pos.	Item	Quantity	Description	Bezeichnung	Serie	K
112	602331114	4	PIN	STIFT		
201	603000108	1.03	INSULATING HOSE	ISOLIERSCHLAUCH		
251	10870540	3.42	ELECTR.CABLE	KFZ-LEITUNG		
1000	605127914	2	RETAINER HOUSING	AUFNAHMEGEHAEUSE		

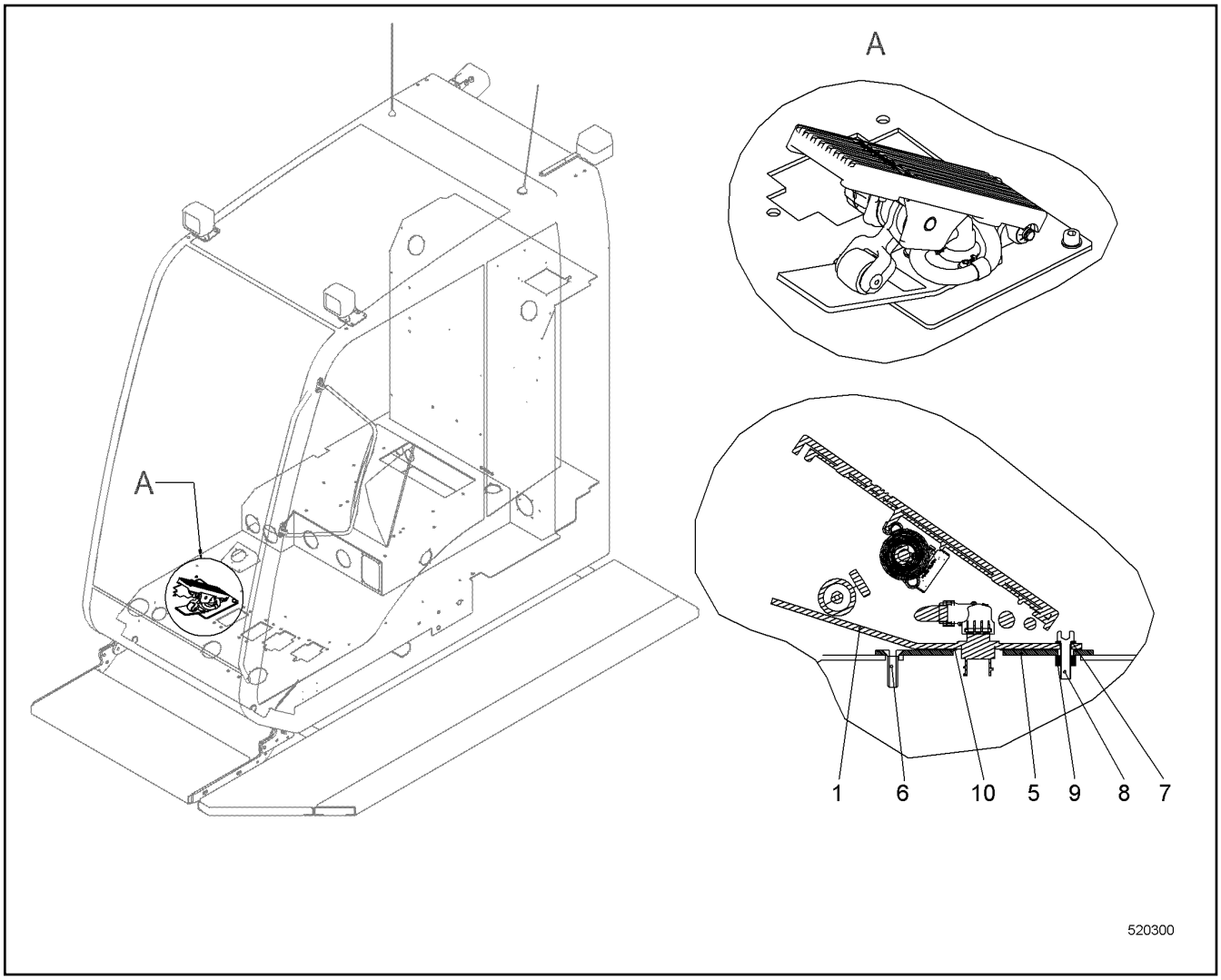

Pos.	Item	Quantity	Description	Bezeichnung	Serie	K
1	11219883	1	FOOT PEDAL	FUSSPEDAL		
5	11220468	1	ADAPTER PLATE	ADAPTERBLECH		
6	408600708	1	COUNTERSUNK SCREW ISO 10642 M8X30 8.8	SENKSCHRAUBE		
7	420001014	4	WASHER ISO 7089 8 A4	SCHEIBE		
8	404206614	4	SOCKET HEAD SCREW ISO 4762 M8X30 A4-7	ZYLINDERSCHRAUBE		
9	413003208	2	CAGE NUT M8-R-123-47 ST	KAEFIGMUTTER		
10	11220477	1	RING	RING		

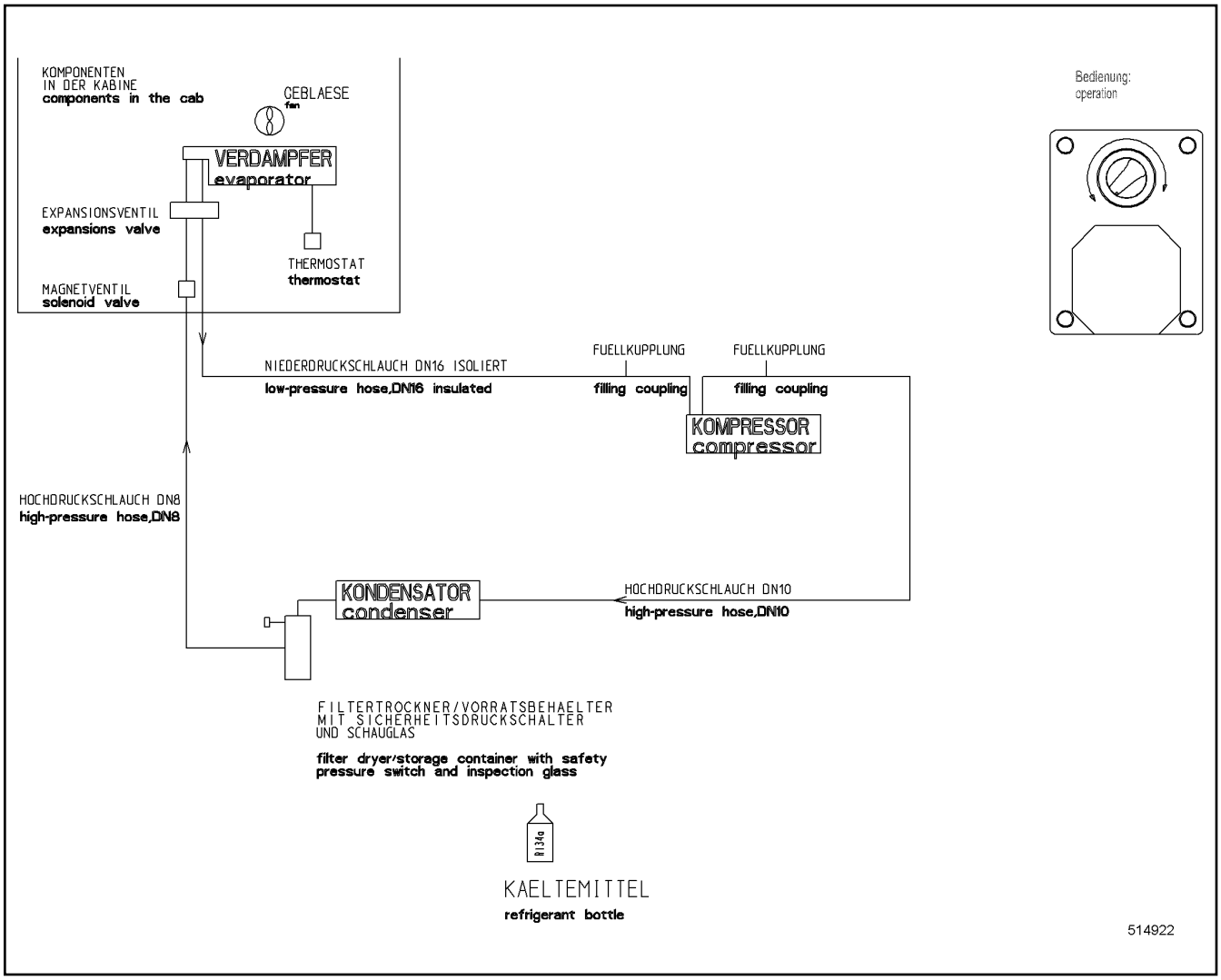

Pos.	Item	Quantity	Description	Bezeichnung	Serie	K
11	11217500	1	LIQUEFIER ⇨ ❑ 700	VERFLUESSIGER		
12	10565368	1	SOLENOIDVALVE BUILT-IN KIT RFK ⇨ ❑ 701	MAGNETVENTIL EINBAUSATZ NR		
15	553078814	2.2	COOLANT	KUEHLMITTEL		
20	10527642	1	HOSE LIST ⇨ ❑ 703	SCHLAUCHLISTE		
22	11232788	1	SIGN	SCHILD		

OHNE BILD
WITHOUT ILLUSTRATION
SANS PLANCHE
SIN FIG.
SEM ILUSTRAÇÃO
БЕЗ ИЗОБРАЖЕНИЯ

600000

Pos.	Item	Quantity	Description	Bezeichnung	Serie	K
1	11236707	1	HEAT EXCHANGER	WAERMETAUSCHER		
2	11236708	1	FAN MOTOR	LUEFTERMOTOR		
3	11236709	1	COVER	ABDECKUNG		
4	11236711	1	DRYER	TROCKNER		
5	11236712	1	PRESSURE SWITCH	DRUCKSCHALTER		
6	11236713	1	LEAD	LEITUNG		
7	11236714	1	FRAME	RAHMEN		

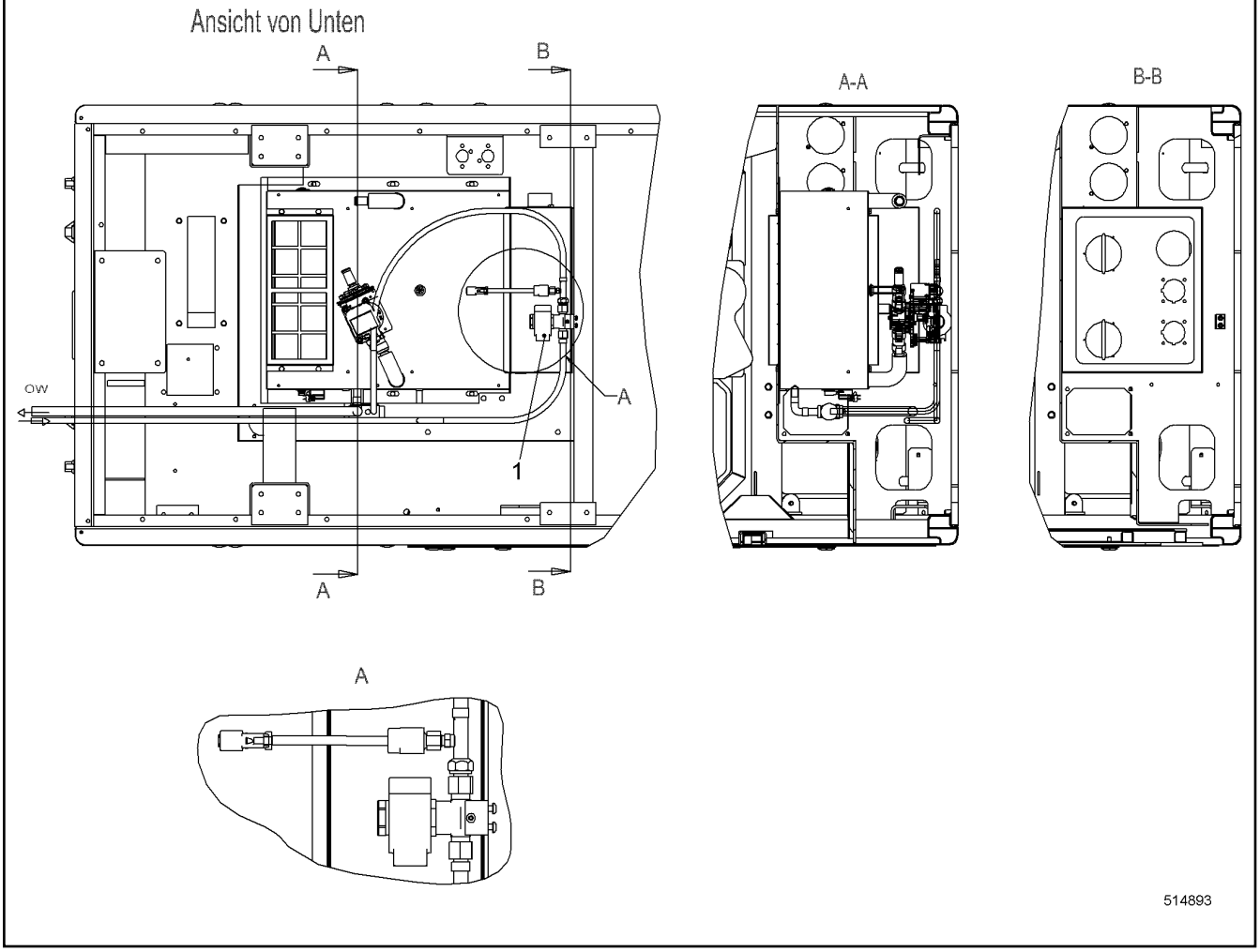

Pos.	Item	Quantity	Description	Bezeichnung	Serie	K
1	10565367	1	SOLENOID VALVE BUILT-IN KIT ⇨ ❑ 702	MAGNETVENTIL EINBAUSATZ		

OHNE BILD
WITHOUT ILLUSTRATION
SANS PLANCHE
SIN FIG.
SEM ILUSTRAÇÃO
БЕЗ ИЗОБРАЖЕНИЯ

600000

Pos.	Item	Quantity	Description	Bezeichnung	Serie	K
1	11254299	1	SOLENOID VALVE	MAGNETVENTIL		

ACHTUNG !
ATTENTION !
ATTENTION !
ATENCIÓN !
ATENÇÃO !
ВНИМАНИЕ

Für Schlauchbestellungen kann über die Schlauchnummer, in der entsprechenden Schlauchliste, die Identnummer festgestellt werden.

For ordering flexible hoses you can find the identification number through the hose-number in the corresponding hose-list.

Pour des ordres de tuyau flexible le nombre d'identification on voit dans la liste de tuyau flexible correspondente.

Para el pedido de manguera, indicar el número de identificación de la manguera de la lista respectiva.

Para se encomendar uma mangueira, consulte o número de identificaçao na respectiva lista de mangueiras.

Для оформления заказов на шланги/рукавы идент. № может быть определен при помощи номера шланга/рукава, указанного в соотетствующем перечне шлангов/рукавов.

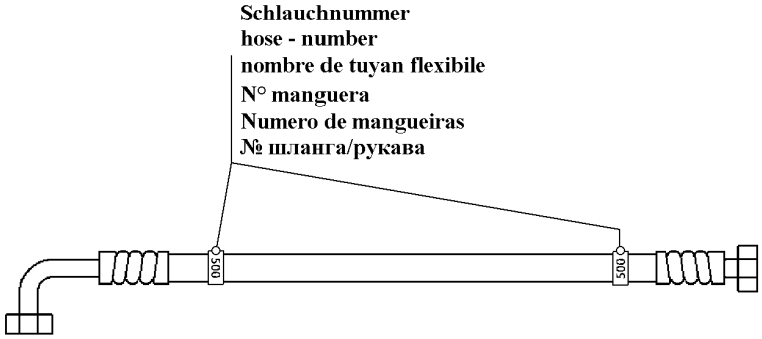

500000

Pos.	Item	Quantity	Description	Bezeichnung	Serie	K
1	10527912	1	HOSE SET CPL	SCHLAUCHSATZ KPL		
2	10527916	1	HOSE SET CPL	SCHLAUCHSATZ KPL		
3	10527918	1	HOSE SET CPL	SCHLAUCHSATZ KPL		

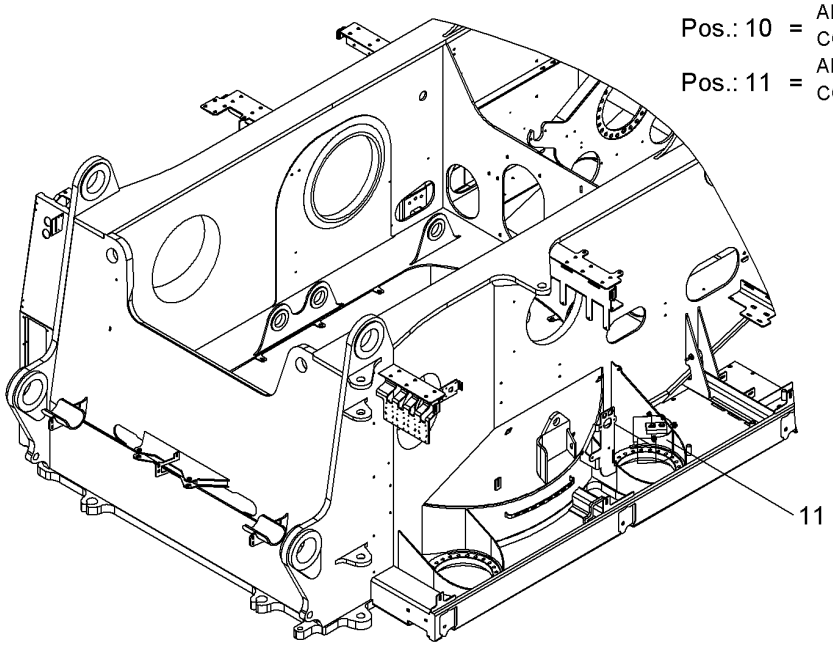

Pos.	Item	Quantity	Description	Bezeichnung	Serie	K
10	11280481	1	CONNECTION PARTS	ANSCHLUSSTEILE		
11	11267716	1	MOUNTING PARTS ⇨ ❑ 705	MONTAGETEILE		
12	11297647	1	CONNECTION PIECE	ANSCHLUSSSTUECK		

LR1300

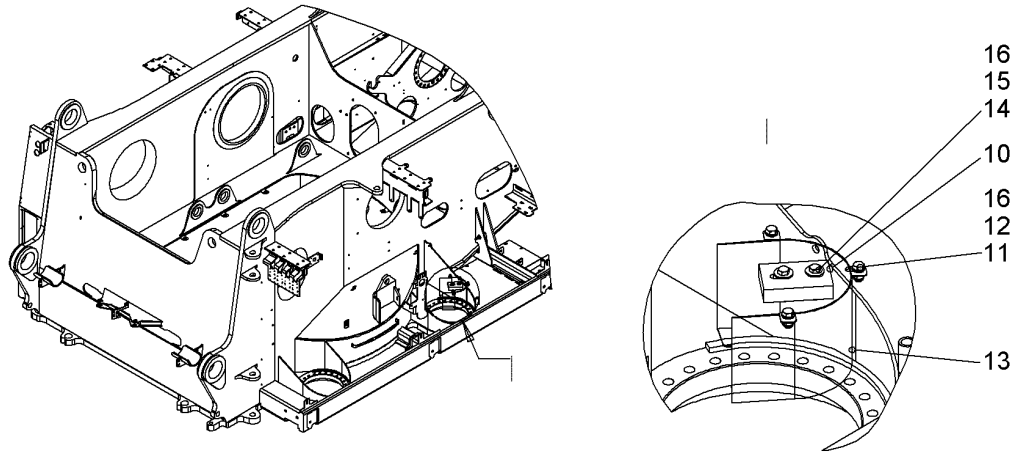

519614

Pos.	Item	Quantity	Description	Bezeichnung	Serie	K
10	11262039	1	SPACER	ABSTANDHALTER		
11	406511914	3	HEX SCREW ISO 4017 M10X25 A4-70	SECHSKANTSCHRAUBE		
12	420001114	6	WASHER ISO 7089 10 A4	SCHEIBE		
13	10227120	1	PINION GUARD	RITZELSCHUTZ		
14	10538822	2	HEX SCREW ISO 4017 M10X55 A4-70	SECHSKANTSCHRAUBE		
15	10540511	4	WASHER ISO 7093-1 10 A4	SCHEIBE		
16	10540494	5	HEX NUT ISO 10511 M10 A4	SECHSKANTMUTTER		

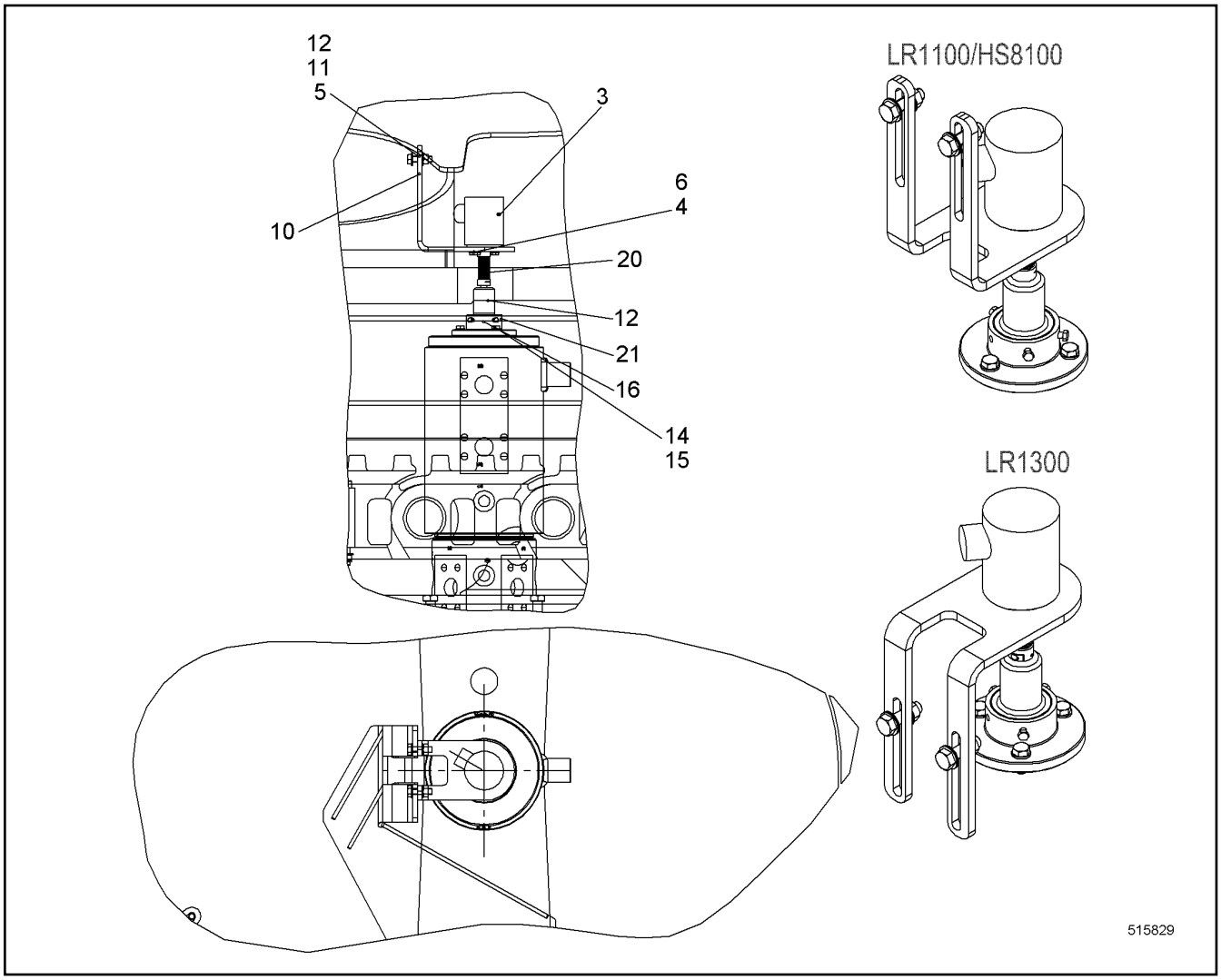

Pos.	Item	Quantity	Description	Bezeichnung	Serie	K
3	10529522	1	SG TACHOGENERATOR RFK ⇨ ❑ 707	DW GEBER NRS		
4	406532614	4	HEX SCREW ISO 4017 M6X20 A4-70	SECHSKANTSCHRAUBE		
5	411514614	2	HEX NUT ISO 4032 M10 A4-70	SECHSKANTMUTTER		
6	420250114	4	WASHER ISO 7092 6 CU;	SCHEIBE		
10	10573951	1	WP	WP		
11	10536580	4	LOCK WASHER 10 254 SMO;EN 10088-3	SICHERUNGSSCHEIBE		
12	406509314	2	HEX SCREW ISO 4017 M10X35 A4-70	SECHSKANTSCHRAUBE		
13	10348618	1	DRIVER	MITNEHMER		
14	406518814	3	HEX SCREW ISO 4017 M8X20 A4-70	SECHSKANTSCHRAUBE		
15	420001014	3	WASHER ISO 7089 8 A4	SCHEIBE		
16	485553914	3	HEX SCREW ISO 4017 M5X12 A4-70	SECHSKANTSCHRAUBE		
20	10348619	1	COUPLING	KUPPLUNG		
21	959712714	1	FLANGE	FLANSCH		

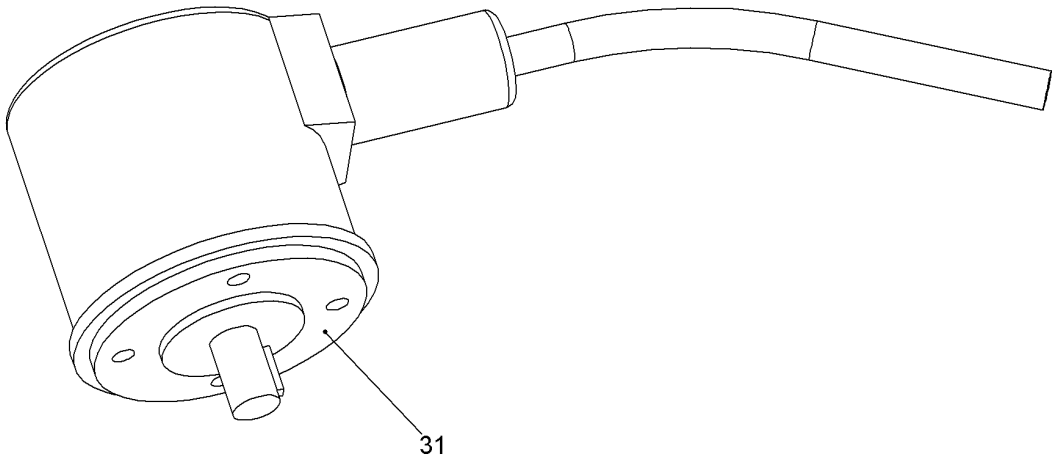

519698

Pos.	Item	Quantity	Description	Bezeichnung	Serie	K
31	10528626	1	SLEWING ANGLE TRANSDUCER	DREHWINKELMESSUMFORMER		

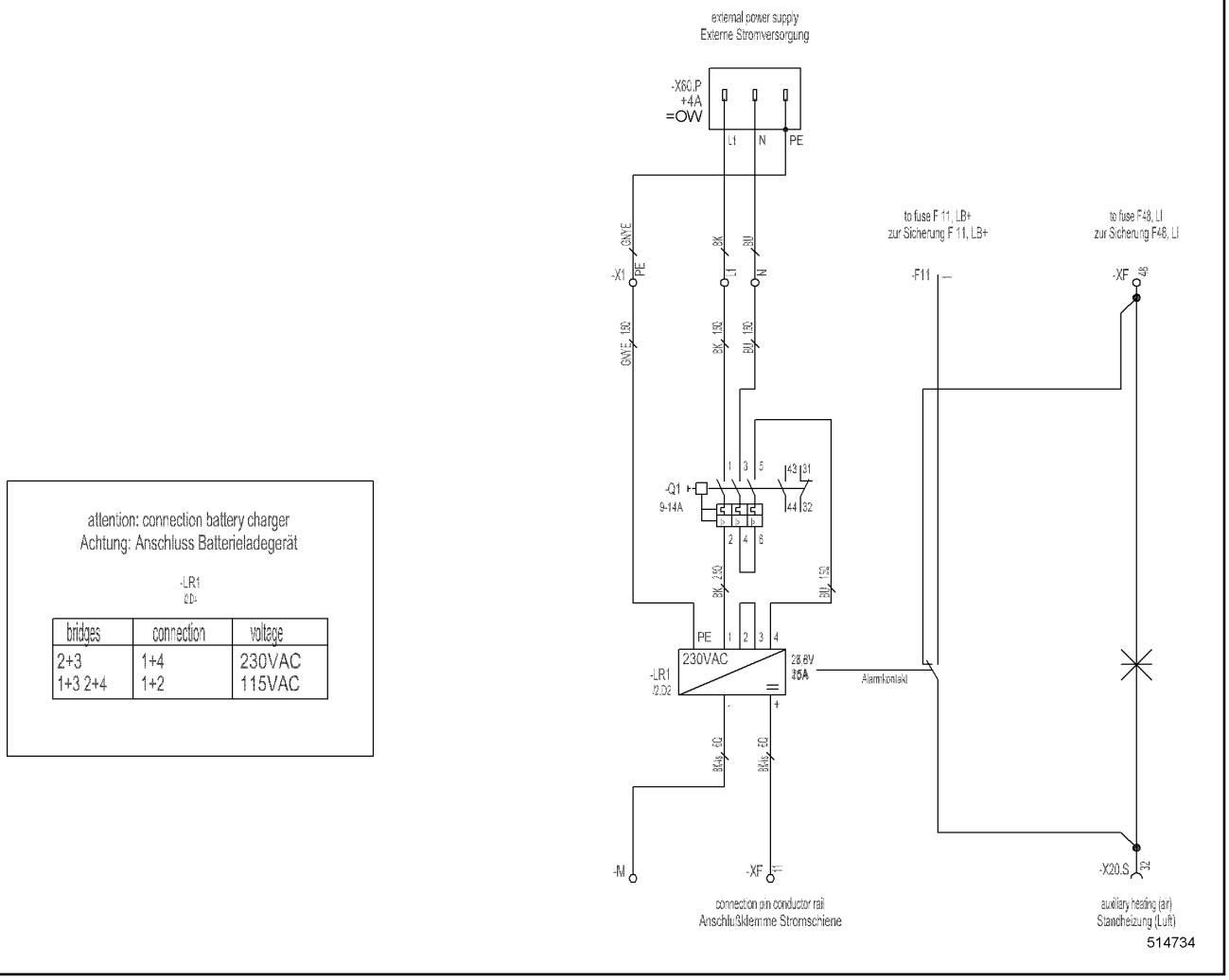

Pos.	Item	Quantity	Description	Bezeichnung	Serie	K
31	10567084	1	CHARGER	LADEGERAET		
32	630170014	1	TIME RELAY	ZEITRELAIS		
33	606271314	1	MOTOR PROTECTION SWITCH	MOTORSCHUTZSCHALTER		
41	605010314	1	DEVICE PLUG	GERAETESTECKER		
42	605612214	1	COUPLING SOCKET	KUPPLUNGSDOSE		
45	600204105	5	LEAD	LEITUNG		
50	10337303	1	PROTECTIVE CONDUCTOR TERMINAL	SCHUTZLEITERKLEMME		
51	602153214	2	SERIES TERMINAL	REIHENKLEMME		
53	602153014	1	CLOSING PLATE	ABSCHLUSSPLATTE		
54	602832214	1	END ANGLE	ENDWINKEL		
55	10502692	1	SCREW UN 1206 M10X30	SCHRAUBE		

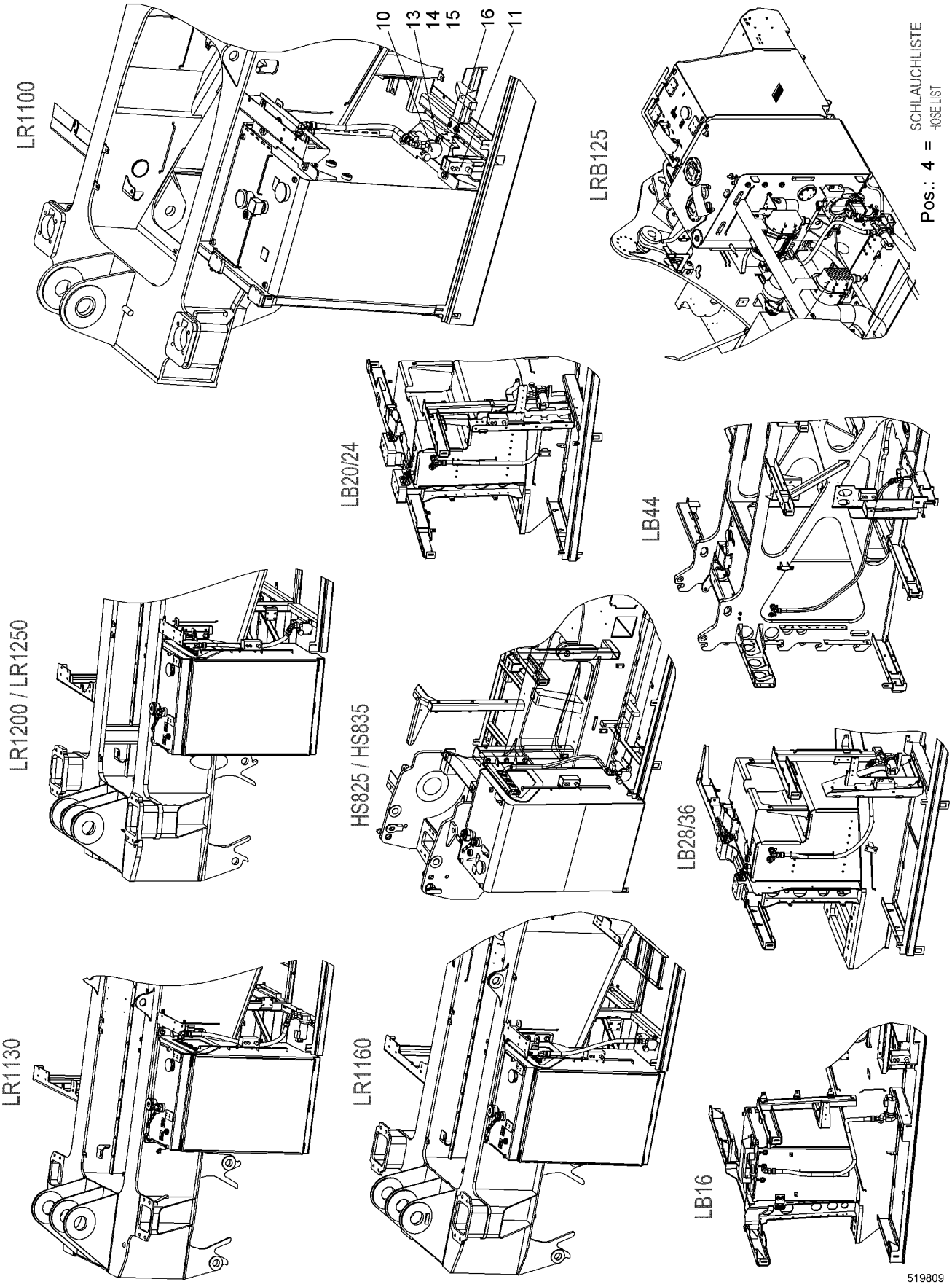
LR1100
10
13
14
15
16
11
LRB125
Pos.: 4 = SCHLAUCHLISTE
HOSE LIST
LB20/24
LB44
LR1200 / LR1250
HS825 / HS835
LB28/36
LR1130
LR1160
LB16
519809

Pos.	Item	Quantity	Description	Bezeichnung	Serie	K
4	10570894	1	HOSE LIST ⇨ ❑ 711	SCHLAUCHLISTE		
10	10529576	1	REFUELLING PUMP CPL ⇨ ❑ 712	BETANKUNGSPUMPE KPL		
11	10521559	1	MODULE REFUELLING SYSTEM ⇨ ❑ 714	MODUL BETANKUNGSANLAGE		
13	406517614	2	HEX SCREW ISO 4017 M8X35 A4-70	SECHSKANTSCHRAUBE		
14	420001014	2	WASHER ISO 7089 8 A4	SCHEIBE		
15	411515014	2	HEX NUT ISO 4032 M8 A4-70	SECHSKANTMUTTER		
16	10541563	2	PAN-HEAD SCREW ISO 7045 M5X25 A2-70	FLACHKOPFSCHRAUBE		
103	11288257	1	HOSE LIST ⇨ ❑ 716	SCHLAUCHLISTE		
108	11310079	1	HOSE LIST	SCHLAUCHLISTE		

ACHTUNG !
ATTENTION !
ATTENTION !
ATENCIÓN !
ATENÇÃO !
ВНИМАНИЕ

Für Schlauchbestellungen kann über die Schlauchnummer, in der entsprechenden Schlauchliste, die Identnummer festgestellt werden.

For ordering flexible hoses you can find the identification number through the hose-number in the corresponding hose-list.

Pour des ordres de tuyau flexible le nombre d'identification on voit dans la liste de tuyau flexible correspondente.

Para el pedido de manguera, indicar el número de identificación de la manguera de la lista respectiva.

Para se encomendar uma mangueira, consulte o número de identificaçao na respectiva lista de mangueiras.

Для оформления заказов на шланги/рукавы идент. № может быть определен при помощи номера шланга/рукава, указанного в соотетствующем перечне шлангов/рукавов.

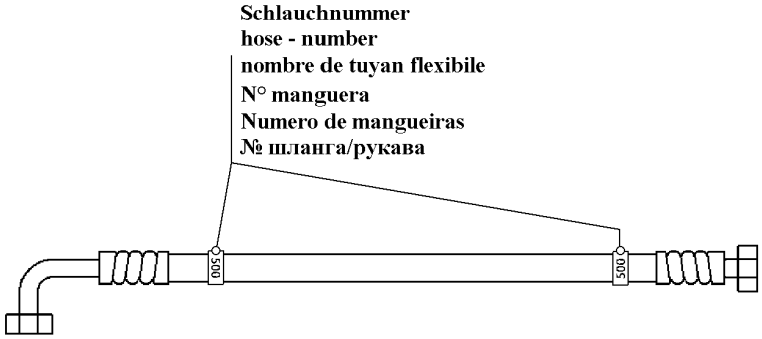

500000

Pos.	Item	Quantity	Description	Bezeichnung	Serie	K
804	995830614	1	HOSE CPL	SCHLAUCH KPL		

OHNE BILD
WITHOUT ILLUSTRATION
SANS PLANCHE
SIN FIG.
SEM ILUSTRAÇÃO
БЕЗ ИЗОБРАЖЕНИЯ

600000

Pos.	Item	Quantity	Description	Bezeichnung	Serie	K
10	510095914	1	REFUEL PUMP ⇨ ❑ 713	BETANKUNGSPUMPE		
11	693013014	1	PLUG	STECKER		
12	693013414	1	CONTACT LOCK	KONTAKTVERRIEGELUNG		
13	6905271	2	PIN CONTACT	STIFTKONTAKT		
14	605614714	2	SEALING PLUG	DICHTSTOPFEN		

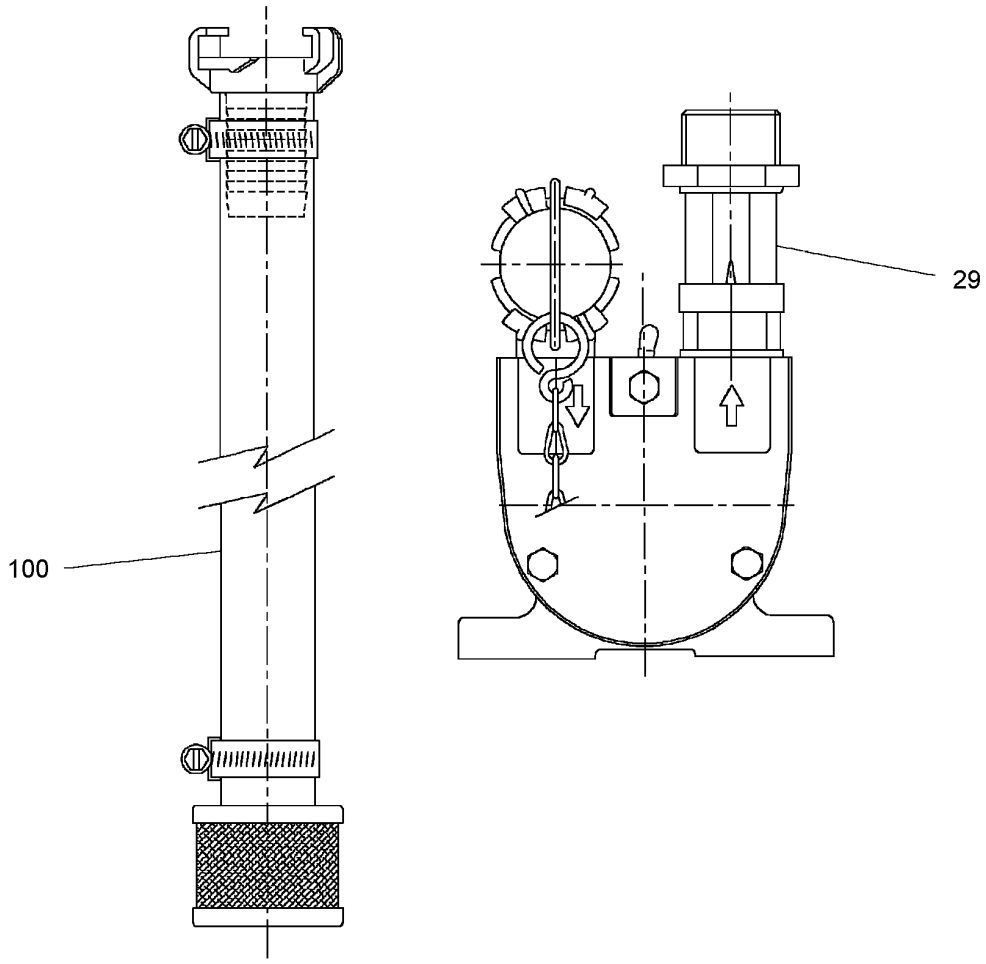

Pos.	Item	Quantity	Description	Bezeichnung	Serie	K
29	592052914	1	NON-RETURN VALVE	RUECKSCHLAGVENTIL		
200	11222864	1	HOSE CPL	SCHLAUCH KPL		

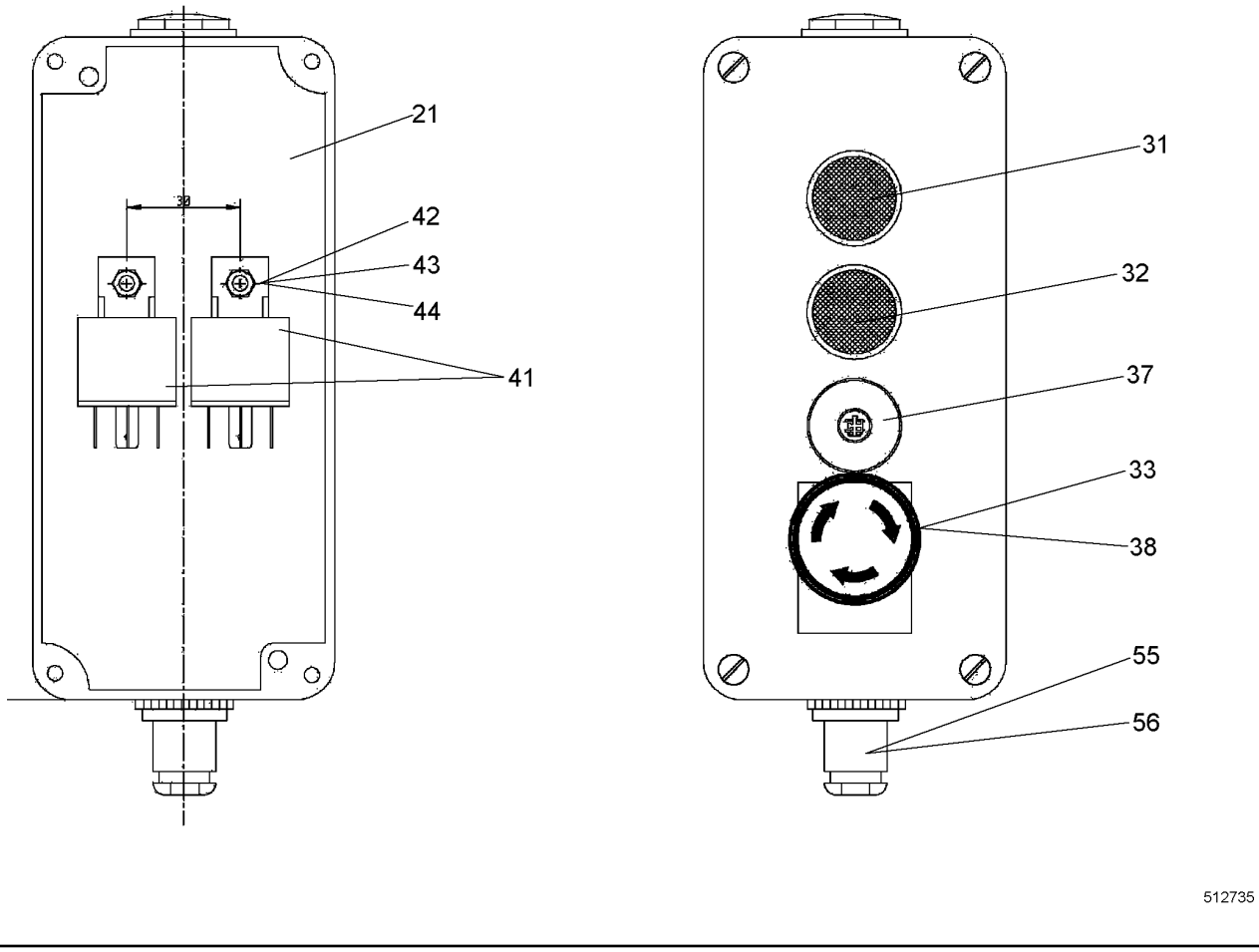

Pos.	Item	Quantity	Description	Bezeichnung	Serie	K
21	611039214	1	HOUSING	GEHAEUSE		
31	693003614	1	ILLUMINATED PUSHBUTTON	LEUCHTDRUCKTASTER		
32	693003414	1	PUSH BUTTON	DRUCKTASTER		
33	693073014	1	EMERGENCY STOP BUTTON	NOT-AUS TASTER		
37	606907114	1	STOPPER PLUG	BLINDSTOPFEN		
38	10575705	1	SIGN	SCHILD		
41	630160214	2	RELAY	RELAIS		

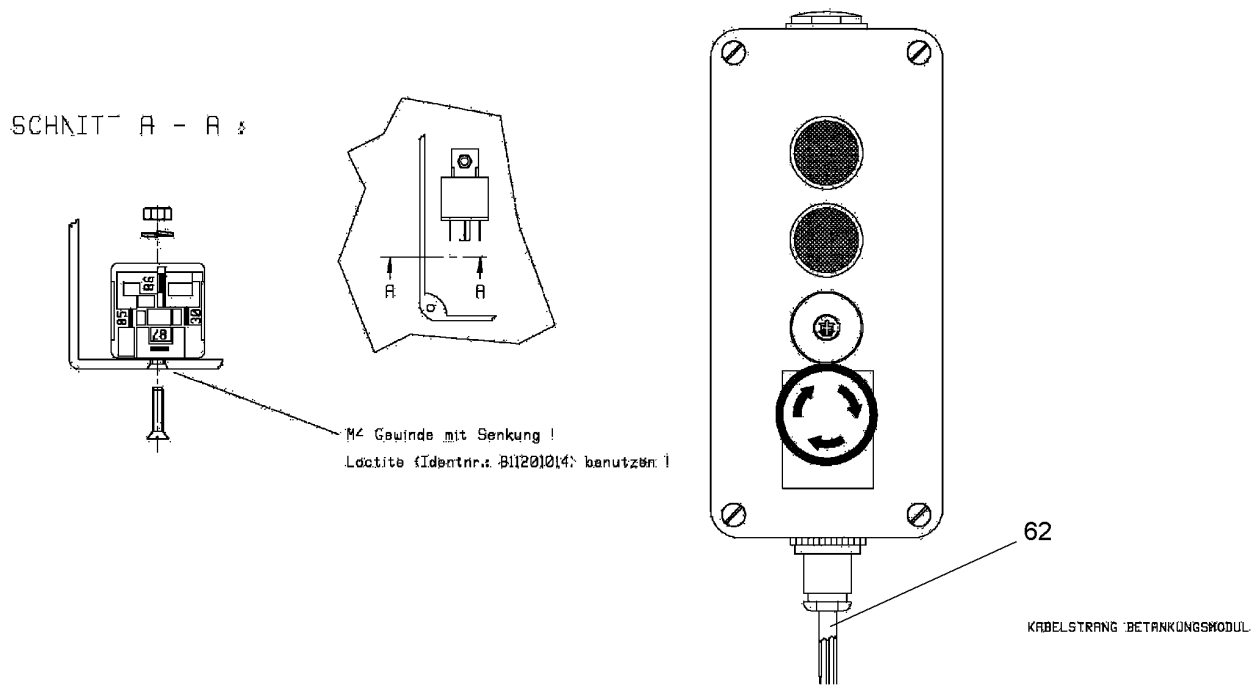

Pos.	Item	Quantity	Description	Bezeichnung	Serie	K
42	4001266	2	COUNTERSUNK SCREW ISO 2009 M4X8 4.8	SENKSCHRAUBE		
43	411551214	2	HEX NUT ISO 4032 M4 A4-70	SECHSKANTMUTTER		
44	10540497	2	WASHER ISO 7093-1 4 A4	SCHEIBE		
55	693148214	1	CABLE GLAND	KABELVERSCHRAUBUNG		
56	602604314	1	REDUCING PIECE	REDUZIERSTUECK		
60	10521560	1	CABLE LOOM REFUELLING SYSTEM	KABELSTRANG BETANKUNGSA		
70	602305914	1	FLAT PLUG HOUSING	FLACHSTECKERGEHAEUSE		
71	602203914	2	FLAT PLUG	FLACHSTECKER		

ACHTUNG !
ATTENTION !
ATTENTION !
ATENCIÓN !
ATENÇÃO !
ВНИМАНИЕ

Für Schlauchbestellungen kann über die Schlauchnummer, in der entsprechenden Schlauchliste, die Identnummer festgestellt werden.

For ordering flexible hoses you can find the identification number through the hose-number in the corresponding hose-list.

Pour des ordres de tuyau flexible le nombre d'identification on voit dans la liste de tuyau flexible correspondente.

Para el pedido de manguera, indicar el número de identificación de la manguera de la lista respectiva.

Para se encomendar uma mangueira, consulte o número de identificaçao na respectiva lista de mangueiras.

Для оформления заказов на шланги/рукавы идент. № может быть определен при помощи номера шланга/рукава, указанного в соотетствующем перечне шлангов/рукавов.

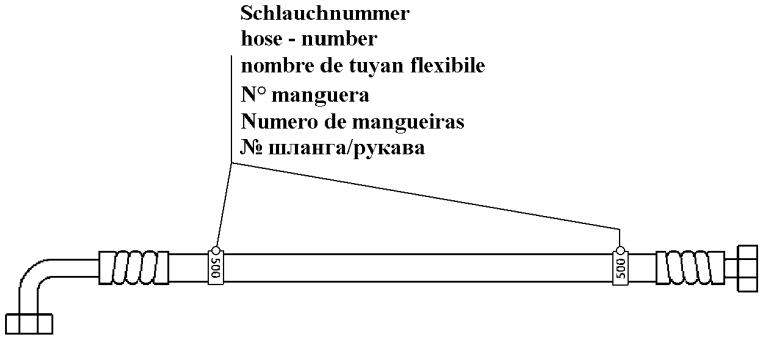

500000

Pos.	Item	Quantity	Description	Bezeichnung	Serie	K
805	919145114	1	HOSE CPL	SCHLAUCH KPL		

Item	Sheet	Assembly	Pos.	Quantity	Item	Sheet	Assembly	Pos.	Quantity
	631	91 92 763 14	11	-2	10020161	296	10 56 580 8	12	2
	631	91 92 763 14	13	-2	10020487	290	10 57 883 5	4	1
	688	10 51 728 0	10	-1	10020487	292	10 57 897 6	4	1
10002167	230	10 14 821 5	4	2	10020487	296	10 56 580 8	4	1
10002309	121	10 12 224 8	24	1	10020512	286	11 24 409 1	9	1
10002309	134	10 13 803 3	24	1	10020519	312	10 51 969 8	8	6
10002552	236	10 14 013 6	132	1	10021236	628	99 24 978 14	35	2
10003366	223	90 78 314	3	1	10024012	681	10 50 775 0	31	1
10004261	175	10 14 768 6	9	1	10024012	683	10 53 246 1	31	1
10004331	192	10 13 728 6	8	8	10027420	221	10 14 736 9	6	1
10005073	200	10 12 948 0	4	4	10030518	228	10 14 611 7	2	4
10005078	186	10 14 671 6	12	3	10030518	238	10 14 622 4	18	1
10005078	217	10 14 588 5	18	1	10030518	249	10 13 555 3	46	1
10005078	238	10 14 622 4	17	4	10030837	174	10 15 438 6	14	14
10005511	182	10 14 861 5	9	1	10032001	273	10 30 300 7	7	1
10005713	202	10 13 394 5	2	1	10035314	270	11 24 114 4	20	1
10007782	179	10 14 201 8	10	6	10035580	175	10 14 768 6	6	1
10007782	182	10 14 861 5	13	3	10036107	356	10 51 907 9	11	1
10007782	216	10 14 333 9	10	2	10036473	207	10 15 286 7	4	1
10008092	154	11 21 593 6	25	1	10036473	209	10 14 114 0	2	1
10009007	229	10 14 273 4	2	5	10036473	212	10 13 543 2	3	1
10009007	233	10 14 274 4	3	1	10036948	692	10 04 363 3	90	1
10011777	204	10 13 382 3	9	2	10036949	692	10 04 363 3	91	1
10011832	175	10 14 768 6	13	1	10036950	381	70 24 996	17	1
10011832	200	10 12 948 0	14	1	10036950	693	70 28 516	17	2
10011864	217	10 14 588 5	6	17	10037312	175	10 14 768 6	4	8
10011864	238	10 14 622 4	7	2	10037623	159	10 22 358 1	1	1
10011865	217	10 14 588 5	11	2	10040064	227	10 11 676 7	2	1
10011866	217	10 14 588 5	19	3	10041876	226	10 14 286 0	17	1
10011866	231	10 14 821 7	2	11	10041876	248	10 15 028 8	21	1
10011866	233	10 14 274 4	6	1	10041903	175	10 14 768 6	10	5
10011867	237	10 14 511 2	16	2	10043633	691	99 21 973 14	2	1
10011868	185	10 13 451 7	2	1	10045155	566	10 57 624 5	21	5
10011868	216	10 14 333 9	7	14	10045155	578	97 14 959 03	34	1
10011870	221	10 14 736 9	8	1	10045155	583	91 95 871 14	34	1
10011870	236	10 14 013 6	27	1	10045155	634	10 51 167 1	34	1
10011871	217	10 14 588 5	14	2	10045355	239	10 14 584 5	5	2
10012659	95	10 11 834 9	23	8	10097551	91	11 26 744 7	4	1
10013575	693	70 28 516	35	1	10097983	413	79 05 233 14	8	1
10013916	225	90 72 906	4	1	10097984	413	79 05 233 14	1	1
10014275	692	10 04 363 3	92	1	10097985	413	79 05 233 14	3	2
10014276	692	10 04 363 3	93	1	10097986	413	79 05 233 14	4	1
10014510	112	92 68 016	35	1	10097987	413	79 05 233 14	5	2
10014638	220	10 14 736 6	3	6	10097988	413	79 05 233 14	6	2
10014638	226	10 14 286 0	4	2	10097989	413	79 05 233 14	7	2
10014864	217	10 14 588 5	7	1	10097992	413	79 05 233 14	2	2
10016874	133	10 12 226 2	17	2	10098106	388	99 18 041 14	12	2
10016906	214	10 14 679 7	4	2	10098106	570	11 28 774 6	25	4
10016906	221	10 14 736 9	15	2	10098106	637	99 10 116 14	45	2
10016906	243	10 11 912 8	3	4	10098143	70	99 16 061 14	1	2
10016906	244	10 12 843 9	3	1	10098157	284	11 24 409 0	60	11
10016907	179	10 14 201 8	11	3	10098157	298	10 54 591 0	18	20
10016947	135	10 13 803 4	28	2	10098157	422	99 26 718 14	12	28
10017158	181	10 14 844 4	5	1	10098157	450	11 23 820 3	42	53
10017870	129	10 14 131 6	25	4	10098157	459	10 58 193 7	20	6
10018711	223	90 78 314	2	4	10098157	485	11 28 390 8	21	3
10020161	290	10 57 883 5	6	2	10098157	486	11 28 391 3	12	2
10020161	292	10 57 897 6	12	2	10098157	499	11 28 583 8	21	3
10020161	294	10 57 940 0	9	1	10098157	505	11 28 626 1	21	3
10020161	295	10 56 623 7	9	2	10098157	512	11 28 629 9	21	4

Item	Sheet	Assembly	Pos.	Quantity	Item	Sheet	Assembly	Pos.	Quantity
10098157	525	11 24 336 5	54	6	10119129	243	10 11 912 8	1	1
10098157	555	11 28 667 9	12	2	10119695	194	10 14 843 8	2	2
10098157	623	11 24 147 8	10	12	10119923	200	10 12 948 0	3	2
10098157	624	11 24 575 5	10	28	10119971	186	10 14 671 6	9	1
10098601	570	11 28 774 6	15	4	10120188	204	10 13 382 3	7	1
10098789	300	11 24 922 2	22	1	10120334	192	10 13 728 6	5	4
10099005	332	99 29 389 14	1	1	10120372	172	10 14 032 7	450	1
10099005	333	99 29 392 14	1	1	10120443	188	10 12 134 5	3	1
10099007	334	99 29 388 14	5	1	10121091	101	90 74 418	1	1
10099009	335	99 29 386 14	3	10	10121335	188	10 12 134 5	2	1
10099009	336	99 29 434 14	3	10	10121345	171	10 14 032 7	52	1
10099010	331	99 33 537 14	6	1	10121893	221	10 14 736 9	10	1
10099037	18	10 52 459 5	1	24	10121952	188	10 12 134 5	1	1
10099055	392	11 25 903 1	12	2	10121971	204	10 13 382 3	2	4
10099094	144	11 22 127 4	24	1	10121982	204	10 13 382 3	5	1
10099094	151	10 35 161 0	24	1	10121983	204	10 13 382 3	4	1
10099140	341	10 51 968 2	16	2	10122245	122	10 13 802 5	7	1
10099173	465	10 51 959 1	2	2	10122246	122	10 13 802 5	8	1
10099300	608	10 51 726 2	8	1	10122248	116	10 12 878 7	80	1
10100303	195	10 13 475 1	3	5	10122262	116	10 12 878 7	85	1
10100303	196	10 12 653 5	3	5	10122265	134	10 13 803 3	4	1
10100303	198	10 13 469 6	4	5	10122317	252	10 14 637 4	1	1
10100304	181	10 14 844 4	4	2	10122692	122	10 13 802 5	4	1
10101458	147	11 49 032 3	3	3	10122693	182	10 14 861 5	10	1
10101657	226	10 14 286 0	6	1	10122841	232	10 14 274 2	2	1
10101657	228	10 14 611 7	3	4	10123210	135	10 13 803 4	4	2
10112497	204	10 13 382 3	17	1	10123214	118	10 12 942 0	90	1
10112497	226	10 14 286 0	2	4	10123236	128	10 14 131 7	2	2
10113710	239	10 14 584 5	4	1	10123256	125	98 85 937	10	2
10113711	181	10 14 844 4	2	33	10123257	125	98 85 937	11	2
10113731	201	10 12 949 9	3	1	10123258	125	98 85 937	12	2
10114153	175	10 14 768 6	5	9	10123528	129	10 14 131 6	3	1
10114975	153	11 21 591 3	2	1	10123532	193	10 13 728 5	2	1
10115224	399	11 22 473 8	6	1	10123671	186	10 14 671 6	3	1
10115230	399	11 22 473 8	11	1	10123876	248	10 15 028 8	103	2
10115232	399	11 22 473 8	13	1	10123877	160	11 24 448 7	12	2
10115237	154	11 21 593 6	28	2	10124239	129	10 14 131 6	4	1
10115237	399	11 22 473 8	25	4	10125386	181	10 14 844 4	6	1
10115240	399	11 22 473 8	27	1	10125439	191	10 13 176 8	3	6
10115241	399	11 22 473 8	49	1	10125740	236	10 14 013 6	3	1
10115576	242	10 11 557 7	1	1	10126090	179	10 14 201 8	4	1
10115577	172	10 14 032 7	520	1	10126091	179	10 14 201 8	2	1
10115623	236	10 14 013 6	18	1	10126317	186	10 14 671 6	7	1
10115664	172	10 14 032 7	452	1	10126427	181	10 14 844 4	3	1
10115770	227	10 11 676 7	1	1	10126510	195	10 13 475 1	2	1
10116078	215	10 14 675 3	4	1	10126510	196	10 12 653 5	2	1
10116110	172	10 14 032 7	521	1	10126510	198	10 13 469 6	3	1
10116255	224	10 29 998 8	1	1	10126535	171	10 14 032 7	83	1
10116767	226	10 14 286 0	1	1	10126738	175	10 14 768 6	2	1
10117768	140	10 13 452 1	11	1	10127323	237	10 14 511 2	9	12
10117891	199	10 12 948 1	2	1	10127478	116	10 12 878 7	7	1
10118349	75	11 24 773 5	4	1	10127479	120	10 12 747 8	10	1
10118350	95	10 11 834 9	3	1	10127614	221	10 14 736 9	4	1
10118357	97	10 11 835 0	90	1	10127967	245	10 12 797 9	1	1
10118367	95	10 11 834 9	83	1	10127979	173	10 14 032 7	526	1
10118556	220	10 14 736 6	2	6	10127984	222	10 14 736 4	2	1
10118912	246	10 11 892 9	4	10	10127984	261	11 24 114 1	30	9
10118928	246	10 11 892 9	1	1	10128100	210	10 13 508 0	4	1
10118929	173	10 14 032 7	530	1	10128228	238	10 14 622 4	9	4
10119128	172	10 14 032 7	522	1	10128439	173	10 14 032 7	524	1

Item	Sheet	Assembly	Pos.	Quantity	Item	Sheet	Assembly	Pos.	Quantity
10128440	244	10 12 843 9	1	1	10135432	171	10 14 032 7	192	6
10128680	193	10 13 728 5	7	2	10135434	172	10 14 032 7	193	6
10128787	75	11 24 773 5	6	1	10135441	182	10 14 861 5	2	1
10128875	236	10 14 013 6	24	1	10135472	118	10 12 942 0	10	1
10129179	210	10 13 508 0	5	1	10135553	248	10 15 028 8	8	1
10129218	272	10 55 091 1	4	1	10135885	234	10 14 144 4	2	6
10129382	210	10 13 508 0	7	1	10136751	192	10 13 728 6	4	2
10129383	210	10 13 508 0	8	1	10136752	192	10 13 728 6	2	2
10129385	210	10 13 508 0	10	1	10136800	179	10 14 201 8	1	1
10129420	117	10 14 131 8	9	2	10136801	180	10 13 680 0	1	1
10129479	200	10 12 948 0	1	1	10136834	248	10 15 028 8	16	1
10129480	199	10 12 948 1	1	1	10137108	129	10 14 131 6	29	3
10129481	171	10 14 032 7	130	1	10137108	134	10 13 803 3	19	1
10129499	200	10 12 948 0	10	1	10137108	135	10 13 803 4	30	3
10129500	201	10 12 949 9	1	1	10137113	134	10 13 803 3	20	3
10129501	201	10 12 949 9	6	1	10137113	135	10 13 803 4	24	4
10129505	201	10 12 949 9	4	1	10137115	129	10 14 131 6	27	2
10129819	216	10 14 333 9	8	1	10137115	135	10 13 803 4	27	2
10129873	137	10 12 987 4	11	1	10137121	95	10 11 834 9	28	2
10129874	75	11 24 773 5	12	1	10137121	114	92 76 408	29	2
10129874	116	10 12 878 7	300	1	10137285	192	10 13 728 6	1	1
10130005	116	10 12 878 7	301	1	10137286	191	10 13 176 8	1	1
10130007	138	10 13 000 5	11	1	10137312	129	10 14 131 6	20	1
10130757	210	10 13 508 0	2	1	10137312	135	10 13 803 4	20	1
10130757	211	10 14 121 6	1	1	10137721	242	10 11 557 7	5	1
10131081	210	10 13 508 0	1	1	10137839	123	10 13 802 6	43	4
10131350	186	10 14 671 6	1	1	10137839	129	10 14 131 6	43	4
10131623	193	10 13 728 5	1	1	10137918	176	10 13 845 0	2	1
10131768	171	10 14 032 7	80	6	10138025	116	10 12 878 7	81	1
10132069	204	10 13 382 3	1	1	10138026	122	10 13 802 5	2	1
10132073	235	10 14 144 3	10	4	10138027	123	10 13 802 6	1	1
10132074	204	10 13 382 3	3	1	10138032	116	10 12 878 7	84	1
10132170	217	10 14 588 5	3	1	10138032	134	10 13 803 3	6	1
10132180	217	10 14 588 5	20	1	10138033	116	10 12 878 7	90	1
10132357	116	10 12 878 7	302	1	10138034	134	10 13 803 3	3	1
10132360	139	10 13 235 7	11	1	10138068	116	10 12 878 7	305	1
10132558	236	10 14 013 6	4	4	10138069	141	10 13 806 8	11	1
10132619	248	10 15 028 8	17	1	10138079	214	10 14 679 7	3	1
10132935	217	10 14 588 5	16	1	10138231	171	10 14 032 7	100	1
10133077	250	10 14 297 7	20	2	10138450	171	10 14 032 7	14	1
10133334	95	10 11 834 9	8	1	10138565	202	10 13 394 5	1	1
10133641	179	10 14 201 8	3	1	10138772	234	10 14 144 4	5	24
10133667	191	10 13 176 8	2	1	10138820	230	10 14 821 5	3	1
10133684	204	10 13 382 3	6	1	10138820	237	10 14 511 2	4	1
10133758	248	10 15 028 8	14	1	10139064	193	10 13 728 5	4	4
10133823	203	10 13 394 7	1	1	10139391	179	10 14 201 8	6	1
10133945	171	10 14 032 7	140	1	10139393	179	10 14 201 8	5	1
10133947	171	10 14 032 7	141	1	10139539	181	10 14 844 4	7	1
10134348	175	10 14 768 6	3	2	10139624	236	10 14 013 6	1	1
10134517	171	10 14 032 7	22	1	10139752	95	10 11 834 9	84	1
10134521	116	10 12 878 7	304	1	10140136	172	10 14 032 7	430	1
10134561	103	10 13 333 4	12	1	10140137	236	10 14 013 6	7	1
10134695	198	10 13 469 6	1	1	10140138	236	10 14 013 6	17	1
10134696	171	10 14 032 7	84	2	10140327	169	11 24 113 9	1	1
10134698	196	10 12 653 5	1	1	10140968	190	10 14 351 1	4	1
10134750	195	10 13 475 1	1	1	10140969	233	10 14 274 4	5	1
10134751	171	10 14 032 7	82	3	10141051	269	10 14 404 9	4	1
10134753	218	10 14 382 8	3	2	10141140	208	10 15 315 1	5	1
10134944	201	10 12 949 9	2	1	10141215	207	10 15 286 7	6	1
10135080	209	10 14 114 0	1	1	10141216	208	10 15 315 1	6	1

Item	Sheet	Assembly	Pos.	Quantity	Item	Sheet	Assembly	Pos.	Quantity
10141216	209	10 14 114 0	12	1	10144093	275	11 24 114 5	13	1
10141261	275	11 24 114 5	15	1	10144100	275	11 24 114 5	3	1
10141316	128	10 14 131 7	1	1	10144102	268	11 24 114 3	31	2
10141317	116	10 12 878 7	83	1	10144282	275	11 24 114 5	66	1
10141318	116	10 12 878 7	4	1	10144297	275	11 24 114 5	67	1
10141438	234	10 14 144 4	7	24	10144699	268	11 24 114 3	20	1
10141440	235	10 14 144 3	1	1	10144861	275	11 24 114 5	14	1
10141442	235	10 14 144 3	2	2	10145112	172	10 14 032 7	432	1
10141443	234	10 14 144 4	1	1	10145229	241	10 14 286 4	1	1
10141444	172	10 14 032 7	410	1	10145373	238	10 14 622 4	2	1
10141453	221	10 14 736 9	1	1	10145395	239	10 14 584 5	6	1
10141520	235	10 14 144 3	5	2	10145725	173	10 14 032 7	570	1
10141549	222	10 14 736 4	1	1	10145845	172	10 14 032 7	440	1
10141790	172	10 14 032 7	217	1	10145885	172	10 14 032 7	214	1
10141801	172	10 14 032 7	230	1	10145889	217	10 14 588 5	13	1
10141983	171	10 14 032 7	53	1	10145895	248	10 15 028 8	1	1
10141986	216	10 14 333 9	4	1	10145914	237	10 14 511 2	12	1
10141988	216	10 14 333 9	1	1	10145918	184	10 14 591 9	2	1
10141989	216	10 14 333 9	2	1	10145919	171	10 14 032 7	21	1
10142006	217	10 14 588 5	8	1	10146012	172	10 14 032 7	388	1
10142018	171	10 14 032 7	16	1	10146029	230	10 14 821 5	2	1
10142030	207	10 15 286 7	2	1	10146117	172	10 14 032 7	342	1
10142030	212	10 13 543 2	1	1	10146120	228	10 14 611 7	1	1
10142080	216	10 14 333 9	3	1	10146224	172	10 14 032 7	436	1
10142429	190	10 14 351 1	5	1	10146274	237	10 14 511 2	3	1
10142567	169	11 24 113 9	4	1	10146374	173	10 14 032 7	656	1
10142591	172	10 14 032 7	415	1	10146415	213	10 13 543 4	1	1
10142641	194	10 14 843 8	1	1	10146538	277	11 24 240 8	5	1
10142668	233	10 14 274 4	1	1	10146587	248	10 15 028 8	10	1
10142734	172	10 14 032 7	370	1	10146716	171	10 14 032 7	25	1
10142742	172	10 14 032 7	382	1	10146753	214	10 14 679 7	1	1
10142744	172	10 14 032 7	387	1	10146758	220	10 14 736 6	1	1
10142747	173	10 14 032 7	630	1	10146795	173	10 14 032 7	571	1
10142749	171	10 14 032 7	15	6	10146797	172	10 14 032 7	201	1
10142758	171	10 14 032 7	40	6	10146836	238	10 14 622 4	3	1
10142763	233	10 14 274 4	2	1	10146838	238	10 14 622 4	4	1
10142813	269	10 14 404 9	3	1	10146839	238	10 14 622 4	5	1
10142860	172	10 14 032 7	340	1	10146840	238	10 14 622 4	6	1
10142864	172	10 14 032 7	481	1	10147362	171	10 14 032 7	51	1
10142942	171	10 14 032 7	150	1	10147364	172	10 14 032 7	224	1
10142977	173	10 14 032 7	581	1	10147366	172	10 14 032 7	220	1
10143235	217	10 14 588 5	1	1	10147368	221	10 14 736 9	2	1
10143339	172	10 14 032 7	212	1	10147369	172	10 14 032 7	221	1
10143510	190	10 14 351 1	1	1	10147437	171	10 14 032 7	50	1
10143511	171	10 14 032 7	70	6	10147686	171	10 14 032 7	12	1
10143512	190	10 14 351 1	3	1	10148088	239	10 14 584 5	1	1
10143607	122	10 13 802 5	6	1	10148200	230	10 14 821 5	1	1
10143665	116	10 12 878 7	2	1	10148215	172	10 14 032 7	380	1
10143819	237	10 14 511 2	20	1	10148217	172	10 14 032 7	381	1
10143827	218	10 14 382 8	2	4	10148254	175	10 14 768 6	1	1
10143828	172	10 14 032 7	215	1	10148438	171	10 14 032 7	81	6
10143829	218	10 14 382 8	1	1	10148444	171	10 14 032 7	20	1
10143831	218	10 14 382 8	4	1	10148614	182	10 14 861 5	1	1
10143994	269	10 14 404 9	2	1	10148615	181	10 14 844 4	1	1
10144027	173	10 14 032 7	652	1	10148669	268	11 24 114 3	4	1
10144034	269	10 14 404 9	1	1	10149013	182	10 14 861 5	11	1
10144038	275	11 24 114 5	7	1	10149145	237	10 14 511 2	2	1
10144039	275	11 24 114 5	5	1	10149191	238	10 14 622 4	1	1
10144049	268	11 24 114 3	3	1	10149477	239	10 14 584 5	2	1
10144086	268	11 24 114 3	5	1	10149655	176	10 13 845 0	1	1

Item	Sheet	Assembly	Pos.	Quantity	Item	Sheet	Assembly	Pos.	Quantity
10149699	231	10 14 821 7	1	1	10224403	533	11 29 426 7	17	3
10150144	208	10 15 315 1	2	1	10224403	541	11 29 938 4	32	2
10150287	248	10 15 028 8	2	1	10224404	533	11 29 426 7	18	2
10150288	173	10 14 032 7	580	1	10224404	541	11 29 938 4	31	1
10150386	229	10 14 273 4	1	1	10224406	533	11 29 426 7	19	4
10150857	171	10 14 032 7	171	1	10224406	541	11 29 938 4	30	2
10150966	187	10 14 275 8	1	1	10224407	533	11 29 426 7	20	4
10151634	177	10 14 274 9	1	1	10224407	541	11 29 938 4	29	1
10151636	178	10 15 163 4	1	1	10224413	370	10 50 133 3	1	1
10151637	178	10 15 163 4	2	1	10224500	29	11 24 519 0	100	4
10151665	173	10 14 032 7	582	1	10224607	662	11 89 408 3	2	1
10151825	216	10 14 333 9	5	1	10224930	582	99 38 329 14	11	1
10152036	250	10 14 297 7	2	1	10225045	31	10 53 048 9	4	4
10152786	215	10 14 675 3	1	1	10225068	350	11 29 327 3	11	1
10152867	171	10 14 032 7	190	6	10225291	14	11 29 618 6	710	3
10152874	207	10 15 286 7	5	1	10225408	66	10 51 969 5	4	1
10153118	237	10 14 511 2	1	1	10225695	282	11 24 409 0	37	2
10153151	171	10 14 032 7	191	6	10225925	8	11 29 618 6	21	1
10153373	226	10 14 286 0	5	1	10226013	75	11 24 773 5	9	1
10153606	171	10 14 032 7	180	1	10226144	628	99 24 978 14	31	2
10153669	232	10 14 274 2	1	1	10226190	59	99 08 706 14	1	1
10153986	171	10 14 032 7	1	1	10226400	492	99 24 404 14	10	2
10154385	174	10 15 438 6	1	1	10226401	500	99 24 405 14	10	2
10154386	171	10 14 032 7	10	1	10226401	506	99 24 406 14	10	4
10165637	380	10 22 506 8	65	1	10226402	460	99 30 060 14	11	4
10171583	412	96 93 178 01	49	3	10226402	492	99 24 404 14	11	4
10171594	412	96 93 178 01	29	3	10226402	500	99 24 405 14	11	4
10171636	412	96 93 178 01	73	1	10226402	506	99 24 406 14	11	8
10217777	244	10 12 843 9	2	1	10226402	519	99 24 594 14	18	4
10218013	199	10 12 948 1	3	18	10226454	366	10 35 250 8	2	1
10218953	45	10 51 572 4	3	1	10226457	369	95 95 763 14	9	1
10219458	237	10 14 511 2	7	4	10226458	369	95 95 763 14	15	1
10219458	239	10 14 584 5	3	2	10226459	368	10 22 645 4	222	1
10219869	126	10 14 360 7	22	4	10226461	368	10 22 645 4	228	1
10220937	144	11 22 127 4	25	1	10226462	368	10 22 645 4	300	1
10222935	443	10 56 187 5	92	2	10226463	368	10 22 645 4	305	1
10222994	450	11 23 820 3	46	1	10226471	373	59 22 871 14	14	1
10222995	450	11 23 820 3	59	2	10226472	370	10 50 133 3	18	1
10223180	354	10 55 963 5	31	1	10226473	370	10 50 133 3	19	1
10223208	378	59 22 930 14	30	1	10226477	370	10 50 133 3	24	1
10223209	378	59 22 930 14	80	1	10226478	370	10 50 133 3	21	1
10223210	378	59 22 930 14	170	1	10226479	370	10 50 133 3	5	1
10223224	350	11 29 327 3	16	1	10226505	75	11 24 773 5	8	1
10223362	290	10 57 883 5	10	1	10226510	350	11 29 327 3	15	1
10223371	329	99 29 258 14	11	1	10226573	311	10 51 969 7	3	1
10223446	290	10 57 883 5	19	1	10226574	606	10 51 743 9	3	1
10223447	290	10 57 883 5	3	1	10226635	160	11 24 448 7	21	1
10223448	290	10 57 883 5	11	1	10226750	645	10 51 971 2	2	2
10223449	290	10 57 883 5	16	1	10227104	457	61 61 541 14	1	1
10223581	75	11 24 773 5	19	1	10227120	705	11 26 771 6	13	1
10223693	282	11 24 409 0	33	2	10227124	422	99 26 718 14	11	1
10224159	159	10 22 358 1	3	1	10227126	457	61 61 541 14	8	1
10224272	29	11 24 519 0	61	2	10227128	457	61 61 541 14	7	1
10224272	351	11 27 973 6	49	3	10227129	457	61 61 541 14	9	1
10224306	31	10 53 048 9	1	1	10227399	313	51 22 527 14	60	1
10224306	355	99 20 811 14	21	2	10227437	650	11 23 619 7	30	1
10224307	31	10 53 048 9	11	3	10227531	276	11 24 114 5	71	6
10224307	355	99 20 811 14	22	2	10227556	355	99 20 811 14	2	1
10224316	28	11 24 519 0	33	1	10227563	354	10 55 963 5	79	2
10224316	31	10 53 048 9	3	1	10227757	422	99 26 718 14	17	4

Item	Sheet	Assembly	Pos.	Quantity	Item	Sheet	Assembly	Pos.	Quantity
10227828	317	99 23 387 14	10	1	10324881	147	11 49 032 3	4	1
10227855	645	10 51 971 2	1	2	10324889	144	11 22 127 4	1	1
10228541	118	10 12 942 0	20	2	10324892	145	10 32 488 9	1	1
10278936	62	10 56 069 4	6	40	10324901	147	11 49 032 3	1	1
10280543	650	11 23 619 7	27	4	10331335	273	10 30 300 7	13	1
10282622	202	10 13 394 5	100	1	10331395	273	10 30 300 7	14	1
10282622	203	10 13 394 7	100	1	10331506	282	11 24 409 0	39	6
10282622	242	10 11 557 7	100	1	10331506	450	11 23 820 3	20	19
10282622	245	10 12 797 9	100	1	10331506	461	99 34 198 14	13	8
10282774	187	10 14 275 8	4	2	10331507	298	10 54 591 0	11	6
10282849	190	10 14 351 1	6	1	10331507	335	99 29 386 14	10	2
10285620	99	10 11 835 7	25	2	10331507	336	99 29 434 14	10	2
10285620	100	92 74 731	27	2	10331507	486	11 28 391 3	13	2
10285708	175	10 14 768 6	100	1	10331507	522	99 30 800 14	17	2
10285708	187	10 14 275 8	100	1	10331507	555	11 28 667 9	13	2
10285708	221	10 14 736 9	100	1	10331507	574	10 55 753 7	13	2
10285708	222	10 14 736 4	100	1	10331507	575	10 55 757 6	13	2
10285708	229	10 14 273 4	100	1	10332095	131	10 12 323 6	90	1
10285708	230	10 14 821 5	100	1	10332095	135	10 13 803 4	2	2
10285708	232	10 14 274 2	100	1	10333464	214	10 14 679 7	2	3
10285708	252	10 14 637 4	100	1	10334218	238	10 14 622 4	11	1
10286648	684	10 53 352 4	4	1	10336008	252	10 14 637 4	3	3
10287664	154	11 21 593 6	1	1	10336583	41	10 51 961 6	10	2
10287665	154	11 21 593 6	2	1	10336584	41	10 51 961 6	11	2
10287725	155	10 28 766 4	1	1	10336668	408	10 55 876 0	8	30
10287733	156	10 28 766 5	1	1	10336668	417	10 55 876 1	8	30
10287741	156	10 28 766 5	6	1	10336682	282	11 24 409 0	4	1
10288438	29	11 24 519 0	52	1	10336707	335	99 29 386 14	1	3
10289804	242	10 11 557 7	8	17	10336707	336	99 29 434 14	1	3
10289931	86	11 21 993 0	24	1	10336708	335	99 29 386 14	2	8
10289973	380	10 22 506 8	41	1	10336708	336	99 29 434 14	2	8
10289973	692	10 04 363 3	41	1	10336709	334	99 29 388 14	1	1
10289974	692	10 04 363 3	43	1	10336711	332	99 29 389 14	2	2
10289975	380	10 22 506 8	43	4	10336711	333	99 29 392 14	2	2
10289976	380	10 22 506 8	72	1	10336722	335	99 29 386 14	4	3
10289976	692	10 04 363 3	72	1	10336722	336	99 29 434 14	4	3
10289977	692	10 04 363 3	42	1	10336761	476	99 26 417 14	11	8
10289978	692	10 04 363 3	40	1	10336763	329	99 29 258 14	5	3
10289980	692	10 04 363 3	75	1	10336774	479	99 29 588 14	11	1
10289981	692	10 04 363 3	76	1	10336774	480	10 35 063 3	11	2
10289982	694	10 28 999 2	51	1	10336904	476	99 26 417 14	10	2
10289984	692	10 04 363 3	100	1	10336924	476	99 26 417 14	16	8
10289987	692	10 04 363 3	2	1	10336926	476	99 26 417 14	17	8
10289988	380	10 22 506 8	2	1	10336928	476	99 26 417 14	18	4
10289990	380	10 22 506 8	70	1	10336968	346	51 14 347 14	120	1
10289991	692	10 04 363 3	70	1	10336970	460	99 30 060 14	10	2
10289992	692	10 04 363 3	50	1	10337050	82	11 21 992 7	4	1
10289993	380	10 22 506 8	50	1	10337050	83	11 21 992 9	4	1
10289994	382	10 28 999 3	55	1	10337050	86	11 21 993 0	12	1
10289994	694	10 28 999 2	55	1	10337050	86	11 21 993 0	13	1
10294170	273	10 30 300 7	9	1	10337050	86	11 21 993 0	14	1
10294171	273	10 30 300 7	4	1	10337050	86	11 21 993 0	15	1
10296919	48	10 56 073 3	13	1	10337050	86	11 21 993 0	16	1
10297295	205	10 14 294 2	1	2	10337050	86	11 21 993 0	17	1
10297876	148	10 35 160 3	2	1	10337050	86	11 21 993 0	18	1
10297876	157	10 11 497 5	2	1	10337050	94	11 21 991 8	26	1
10297942	81	11 21 990 5	6	1	10337052	86	11 21 993 0	21	1
10299988	223	90 78 314	1	1	10337055	144	11 22 127 4	31	1
10303007	272	10 55 091 1	1	1	10337055	154	11 21 593 6	31	1
10324860	147	11 49 032 3	2	1	10337055	399	11 22 473 8	28	5

Item	Sheet	Assembly	Pos.	Quantity	Item	Sheet	Assembly	Pos.	Quantity
10337090	254	11 24 114 0	45	1	10351100	629	11 21 530 2	21	1
10337303	708	10 56 013 7	50	1	10351101	354	10 55 963 5	60	1
10337309	519	99 24 594 14	10	2	10351102	354	10 55 963 5	61	3
10340226	273	10 30 300 7	20	2	10351103	354	10 55 963 5	62	1
10340236	273	10 30 300 7	19	2	10351104	354	10 55 963 5	63	2
10342191	188	10 12 134 5	4	3	10351105	354	10 55 963 5	64	1
10342770	193	10 13 728 5	3	1	10351106	354	10 55 963 5	65	3
10347554	30	10 35 167 4	1	1	10351108	354	10 55 963 5	59	2
10348527	584	79 03 862 14	13	1	10351188	2	01 38 281 14	8	2
10348618	706	10 52 293 0	13	1	10351239	670	59 21 826 14	205	2
10348619	706	10 52 293 0	20	1	10351486	8	11 29 618 6	3	1
10348635	3	01 38 281 14	134	1	10351499	669	59 21 826 14	120	2
10348662	633	10 51 176 9	12	4	10351547	286	11 24 409 1	7	7
10348694	519	99 24 594 14	11	4	10351548	286	11 24 409 1	8	1
10349125	533	11 29 426 7	1	1	10351603	143	11 22 126 8	2	1
10349193	86	11 21 993 0	22	1	10351605	144	11 22 127 4	22	1
10349193	86	11 21 993 0	23	1	10351605	151	10 35 161 0	22	1
10349201	533	11 29 426 7	10	1	10351608	144	11 22 127 4	23	4
10349201	541	11 29 938 4	17	2	10351608	151	10 35 161 0	23	4
10349202	533	11 29 426 7	11	1	10351610	142	10 22 650 5	99	1
10349206	298	10 54 591 0	7	8	10351656	28	11 24 519 0	21	1
10349207	527	11 29 648 5	10	1	10351660	28	11 24 519 0	23	1
10349222	541	11 29 938 4	33	1	10351667	28	11 24 519 0	22	1
10349224	533	11 29 426 7	26	2	10351668	28	11 24 519 0	26	1
10349224	541	11 29 938 4	27	2	10351671	28	11 24 519 0	24	1
10349225	533	11 29 426 7	16	7	10351672	28	11 24 519 0	27	1
10349225	541	11 29 938 4	26	6	10351674	28	11 24 519 0	28	1
10349263	284	11 24 409 0	52	24	10351728	367	10 35 250 8	148	1
10349289	570	11 28 774 6	18	4	10351729	367	10 35 250 8	149	1
10349402	619	10 55 372 1	19	10	10351784	290	10 57 883 5	14	1
10349434	302	11 24 483 7	21	4	10351784	292	10 57 897 6	14	1
10349439	307	99 27 572 14	12	6	10351784	294	10 57 940 0	14	1
10349440	307	99 27 572 14	11	8	10351784	295	10 56 623 7	14	1
10349541	542	10 59 968 1	11	2	10351784	296	10 56 580 8	16	1
10349598	451	11 23 820 3	81	2	10351894	311	10 51 969 7	11	4
10349598	488	11 28 397 8	10	1	10352111	44	10 56 070 1	16	1
10349598	490	11 28 399 7	10	1	10352119	435	11 26 260 6	12	1
10349599	451	11 23 820 3	82	2	10352119	441	11 26 261 1	12	1
10349599	487	11 28 397 7	10	1	10352185	26	10 22 592 5	1	1
10349599	489	11 28 399 5	10	1	10352186	26	10 22 592 5	2	1
10349600	550	99 31 679 14	6	2	10352187	26	10 22 592 5	3	1
10349756	304	11 24 483 7	93	6	10352188	26	10 22 592 5	5	1
10349798	630	99 40 788 14	1	1	10352312	669	59 21 826 14	35	1
10350084	461	99 34 198 14	11	4	10352313	669	59 21 826 14	40	1
10350196	591	11 48 116 2	2	1	10352315	669	59 21 826 14	55	1
10350230	78	11 24 682 0	130	2	10352319	669	59 21 826 14	60	1
10350232	78	11 24 682 0	290	4	10352344	669	59 21 826 14	65	1
10350334	351	11 27 973 6	71	2	10352349	669	59 21 826 14	70	2
10350439	254	11 24 114 0	46	1	10352352	669	59 21 826 14	75	2
10350539	643	97 05 997 03	10	2	10352353	669	59 21 826 14	80	1
10350540	531	11 24 475 9	17	1	10352354	669	59 21 826 14	95	1
10350546	68	10 22 540 8	2	1	10352355	669	59 21 826 14	110	1
10350604	159	10 22 358 1	2	1	10352356	669	59 21 826 14	105	3
10350632	480	10 35 063 3	10	1	10352357	669	59 21 826 14	115	1
10350633	478	11 28 594 7	11	2	10352359	669	59 21 826 14	130	4
10350633	496	11 28 619 1	11	2	10352361	669	59 21 826 14	135	1
10350633	502	11 28 653 4	11	2	10352362	669	59 21 826 14	145	1
10350932	167	10 57 532 2	9	1	10352364	669	59 21 826 14	150	1
10350940	644	10 51 971 3	22	4	10352365	669	59 21 826 14	155	1
10350978	75	11 24 773 5	32	1	10352368	669	59 21 826 14	140	1

Item	Sheet	Assembly	Pos.	Quantity	Item	Sheet	Assembly	Pos.	Quantity
10352371	669	59 21 826 14	170	1	10447747	402	10 55 154 8	2	4
10352382	669	59 21 826 14	175	1	10447747	454	10 55 157 6	2	6
10352383	670	59 21 826 14	180	2	10447748	25	10 44 510 5	4	6
10352384	670	59 21 826 14	185	1	10447748	400	10 44 510 2	4	4
10352446	466	10 09 917 3	1	1	10447748	401	10 44 510 1	4	4
10352447	646	10 22 785 5	1	1	10447749	25	10 44 510 5	5	1
10352453	264	11 24 114 2	17	1	10447749	400	10 44 510 2	5	1
10352462	485	11 28 390 8	17	0.422	10447749	401	10 44 510 1	5	1
10352462	499	11 28 583 8	17	0.422	10448187	52	11 27 315 5	14	1
10352462	505	11 28 626 1	17	0.422	10472425	10	11 29 618 6	109	18
10352465	366	10 35 250 8	53	1	10472425	75	11 24 773 5	70	3
10352508	350	11 29 327 3	10	1	10472425	321	10 51 968 7	616	2
10352672	366	10 35 250 8	57	1	10472425	394	11 25 903 1	631	10
10353879	290	10 57 883 5	20	1	10472425	435	11 26 260 6	740	5
10353879	292	10 57 897 6	3	1	10472425	441	11 26 261 1	740	5
10353879	294	10 57 940 0	10	1	10473040	522	99 30 800 14	22	1
10353879	295	10 56 623 7	10	1	10489016	220	10 14 736 6	4	6
10353879	296	10 56 580 8	6	1	10489376	222	10 14 736 4	3	3
10355006	268	11 24 114 3	23	2	10490781	10	11 29 618 6	110	19
10355730	154	11 21 593 6	15	1	10490781	75	11 24 773 5	72	2
10355731	154	11 21 593 6	16	1	10490781	312	10 51 969 8	612	2
10355735	154	11 21 593 6	27	4	10490781	344	10 55 216 1	641	2
10409413	148	10 35 160 3	1	1	10490784	10	11 29 618 6	106	4
10410932	240	10 12 037 2	1	1	10490784	75	11 24 773 5	71	13
10423993	20	10 59 143 5	900	1	10490784	344	10 55 216 1	640	4
10424238	86	11 21 993 0	30	3	10490784	465	10 51 959 1	660	1
10424276	352	11 27 973 6	85	1	10490784	652	10 51 973 8	615	1
10429946	215	10 14 675 3	2	2	10490785	10	11 29 618 6	107	4
10443136	221	10 14 736 9	5	1	10490787	10	11 29 618 6	108	5
10444797	276	11 24 114 5	75	1	10493626	28	11 24 519 0	50	1
10445040	466	10 09 917 3	220	1	10493626	250	10 14 297 7	1	2
10445043	450	11 23 820 3	47	1	10493890	27	55 09 453 14	901	1
10445101	392	11 25 903 1	8	1	10494116	268	11 24 114 3	21	4
10445102	392	11 25 903 1	7	1	10494117	268	11 24 114 3	22	2
10445105	8	11 29 618 6	19	1	10501333	366	10 35 250 8	3	1
10445126	453	10 51 826 1	3	1	10501398	3	01 38 281 14	138	2
10445127	392	11 25 903 1	20	2	10501620	27	55 09 453 14	1	1
10445629	386	11 30 962 5	1	2	10501783	414	10 50 179 5	1	1
10445635	52	11 27 315 5	13	1	10501795	408	10 55 876 0	32	6
10445651	302	11 24 483 7	39	2	10501795	417	10 55 876 1	32	6
10445976	361	69 31 685 14	1	1	10501796	414	10 50 179 5	2	1
10446225	75	11 24 773 5	14	1	10502692	31	10 53 048 9	5	1
10446305	75	11 24 773 5	28	1	10502692	708	10 56 013 7	55	1
10446566	399	11 22 473 8	14	1	10503477	397	51 24 059 14	13	1
10446871	408	10 55 876 0	47	6	10503513	397	51 24 059 14	1	1
10446871	417	10 55 876 1	47	6	10504352	586	79 04 112 14	1	1
10447016	475	99 14 137 14	7	6	10504352	593	79 04 871 14	1	3
10447016	606	10 51 743 9	23	12	10504737	67	59 21 041 14	19	1
10447017	363	91 65 251 14	10	4	10504994	677	11 23 623 3	9	1
10447017	530	11 29 451 7	12	2	10505322	466	10 09 917 3	2	1
10447017	536	11 29 488 4	12	2	10507750	678	11 21 990 7	3	1
10447017	572	11 29 457 3	12	2	10507750	682	11 89 400 8	8	1
10447017	573	11 29 462 6	12	2	10507964	34	10 56 645 8	56	12
10447017	577	99 48 521 14	38	2	10509133	60	10 56 067 3	3	2
10447017	606	10 51 743 9	20	10	10509153	619	10 55 372 1	32	4
10447258	370	10 50 133 3	47	1	10511185	3	01 38 281 14	438	1
10447259	368	10 22 645 4	39	1	10511274	2	01 38 281 14	15	1
10447743	401	10 44 510 1	1	1	10511671	633	10 51 176 9	5	1
10447744	400	10 44 510 2	1	1	10511769	3	01 38 281 14	600	1
10447745	25	10 44 510 5	1	1	10512048	367	10 35 250 8	101	1

Item	Sheet	Assembly	Pos.	Quantity	Item	Sheet	Assembly	Pos.	Quantity
10512061	367	10 35 250 8	89	1	10522930	4	01 38 281 14	828	1
10512662	378	59 22 930 14	40	1	10523125	450	11 23 820 3	38	2
10512821	367	10 35 250 8	88	2	10523559	408	10 55 876 0	11	1
10512966	387	10 51 969 6	10	80	10523559	417	10 55 876 1	11	1
10513459	75	11 24 773 5	17	1	10524392	606	10 51 743 9	4	1
10513605	261	11 24 114 1	31	5	10524422	3	01 38 281 14	401	1
10514797	617	54 02 705 14	17	6	10524595	17	10 35 148 6	1	1
10515473	29	11 24 519 0	66	2	10524927	352	11 27 973 6	100	1
10515724	44	10 56 070 1	12	1	10524927	474	10 53 120 7	37	2
10517047	593	79 04 871 14	8	2	10524928	352	11 27 973 6	90	1
10517262	607	10 54 251 6	2	1	10524928	474	10 53 120 7	35	2
10517280	4	01 38 281 14	719	1	10525039	86	11 21 993 0	42	1
10517281	688	10 51 728 0	2	1	10525837	539	11 31 381 7	1	2
10517426	29	11 24 519 0	81	1	10526560	306	99 23 386 14	11	1
10517439	3	01 38 281 14	550	1	10526733	44	10 56 070 1	11	1
10518261	448	11 23 820 3	2	1	10526837	350	11 29 327 3	55	1
10518461	408	10 55 876 0	41	1	10526837	419	11 23 548 1	13	16
10518461	417	10 55 876 1	42	1	10526962	354	10 55 963 5	21	1
10518558	610	10 52 439 2	1	1	10527391	687	10 57 848 6	1	1
10518558	610	10 52 439 2	2	5	10527642	699	11 23 189 1	20	1
10518558	658	99 27 747 14	1	3	10527912	703	10 52 764 2	1	1
10518558	675	10 53 635 2	1	2	10527916	703	10 52 764 2	2	1
10519025	399	11 22 473 8	30	1	10527918	703	10 52 764 2	3	1
10519079	351	11 27 973 6	10	1	10528589	48	10 56 073 3	18	1
10519082	352	11 27 973 6	201	1	10528626	707	10 52 952 2	31	1
10519084	352	11 27 973 6	203	1	10529071	686	10 58 064 7	11	1
10519085	352	11 27 973 6	204	1	10529074	686	10 58 064 7	12	1
10519481	73	11 24 048 0	15	1	10529080	686	10 58 064 7	14	1
10519591	463	10 58 510 8	2	1	10529084	686	10 58 064 7	15	1
10519616	6	11 24 047 9	14	1	10529086	686	10 58 064 7	16	1
10519631	6	11 24 047 9	21	1	10529089	686	10 58 064 7	17	1
10519682	2	01 38 281 14	27	1	10529210	44	10 56 070 1	14	1
10519683	341	10 51 968 2	2	1	10529522	706	10 52 293 0	3	1
10519686	318	10 51 969 1	1	1	10529523	4	01 38 281 14	829	1
10519687	320	10 51 968 6	2	1	10529576	710	10 52 155 4	10	1
10519691	2	01 38 281 14	25	1	10529597	354	10 55 963 5	57	1
10519694	6	11 24 047 9	51	1	10530197	78	11 24 682 0	360	8
10519695	64	10 51 969 4	2	1	10530200	78	11 24 682 0	440	12
10519696	2	01 38 281 14	31	1	10530243	474	10 53 120 7	31	2
10519697	2	01 38 281 14	23	1	10530398	424	11 22 050 0	10	1
10519698	311	10 51 969 7	2	1	10530398	439	11 22 050 1	10	1
10519712	644	10 51 971 3	2	1	10530418	485	11 28 390 8	14	1
10519713	4	01 38 281 14	642	1	10530418	499	11 28 583 8	14	1
10519738	650	11 23 619 7	2	1	10530446	448	11 23 820 3	3	1
10519789	264	11 24 114 2	74	4	10530486	31	10 53 048 9	6	1
10520078	29	11 24 519 0	131	1	10530487	31	10 53 048 9	7	1
10520522	547	10 53 146 1	10	26	10530489	28	11 24 519 0	34	1
10520927	48	10 56 073 3	14	1	10530653	75	11 24 773 5	5	2
10521183	408	10 55 876 0	12	1	10530689	450	11 23 820 3	23	2
10521183	417	10 55 876 1	12	1	10530689	461	99 34 198 14	12	4
10521397	261	11 24 114 1	35	4	10530689	486	11 28 391 3	10	1
10521554	4	01 38 281 14	858	1	10531207	473	11 24 444 4	3	1
10521559	710	10 52 155 4	11	1	10531224	688	10 51 728 0	3	1
10521560	715	10 52 155 9	60	1	10531409	525	11 24 336 5	3	1
10522188	373	59 22 871 14	4	1	10531410	564	11 24 263 6	3	1
10522189	373	59 22 871 14	7	1	10531413	509	11 24 132 4	3	1
10522190	373	59 22 871 14	5	1	10531455	523	11 24 618 2	13	1
10522845	584	79 03 862 14	1	1	10531456	544	10 53 145 5	2	1
10522847	584	79 03 862 14	2	1	10531461	545	10 53 145 6	2	1
10522848	584	79 03 862 14	3	1	10531472	544	10 53 145 5	4	1

Item	Sheet	Assembly	Pos.	Quantity	Item	Sheet	Assembly	Pos.	Quantity
10531718	356	10 51 907 9	12	1	10538807	450	11 23 820 3	54	17
10531725	76	11 24 773 5	616	1	10538807	485	11 28 390 8	24	3
10531873	450	11 23 820 3	15	2	10538807	499	11 28 583 8	24	3
10531873	485	11 28 390 8	16	1	10538807	505	11 28 626 1	24	3
10531873	499	11 28 583 8	16	1	10538807	525	11 24 336 5	11	2
10531873	505	11 28 626 1	16	1	10538807	554	11 28 979 0	15	4
10531889	555	11 28 667 9	10	1	10538807	623	11 24 147 8	11	12
10532461	682	11 89 400 8	7	1	10538807	624	11 24 575 5	11	16
10533524	683	10 53 246 1	50	1	10538808	541	11 29 938 4	34	2
10533589	340	11 22 703 7	12	1	10538808	577	99 48 521 14	49	2
10533999	64	10 51 969 4	12	2	10538808	633	10 51 176 9	14	2
10534039	64	10 51 969 4	13	4	10538809	164	11 24 113 8	50	2
10534042	64	10 51 969 4	14	8	10538809	254	11 24 114 0	64	2
10534307	75	11 24 773 5	3	2	10538809	270	11 24 114 4	60	2
10535526	479	99 29 588 14	12	1	10538809	484	11 28 725 5	13	2
10535526	480	10 35 063 3	12	2	10538810	450	11 23 820 3	37	2
10536350	4	01 38 281 14	650	1	10538812	450	11 23 820 3	29	4
10536351	672	10 53 635 0	2	1	10538822	637	99 10 116 14	50	8
10536352	672	10 53 635 0	4	1	10538822	705	11 26 771 6	14	2
10536577	574	10 55 753 7	16	4	10538823	264	11 24 114 2	62	4
10536577	575	10 55 757 6	16	4	10538823	516	11 28 357 6	9	4
10536577	680	11 22 344 2	22	2	10538824	164	11 24 113 8	51	6
10536579	450	11 23 820 3	19	4	10538824	268	11 24 114 3	61	2
10536579	513	11 28 610 5	16	4	10538826	621	10 55 372 1	40	4
10536579	533	11 29 426 7	33	4	10538828	537	99 35 031 14	16	2
10536580	574	10 55 753 7	17	2	10538830	304	11 24 483 7	74	8
10536580	575	10 55 757 6	17	2	10538834	419	11 23 548 1	24	8
10536580	637	99 10 116 14	52	16	10539250	29	11 24 519 0	71	1
10536580	706	10 52 293 0	11	4	10539293	60	10 56 067 3	17	6
10536581	473	11 24 444 4	24	8	10539293	304	11 24 483 7	100	1
10536581	521	99 23 398 14	29	8	10539293	604	11 29 444 5	63	2
10536581	537	99 35 031 14	14	4	10539293	650	11 23 619 7	8	2
10536581	570	11 28 774 6	50	12	10539297	529	11 29 649 2	17	4
10536581	574	10 55 753 7	18	4	10539300	10	11 29 618 6	62	24
10536581	575	10 55 757 6	18	4	10539300	321	10 51 968 7	615	2
10536581	582	99 38 329 14	21	4	10539300	392	11 25 903 1	19	16
10536582	320	10 51 968 6	21	13	10539300	435	11 26 260 6	750	8
10536582	329	99 29 258 14	1	8	10539300	441	11 26 261 1	750	16
10536582	582	99 38 329 14	48	2	10539305	392	11 25 903 1	17	8
10536583	529	11 29 649 2	16	4	10539307	435	11 26 260 6	10	4
10536597	521	99 23 398 14	30	8	10539307	441	11 26 261 1	10	4
10536597	527	11 29 648 5	13	5	10539311	321	10 51 968 7	6	6
10536597	533	11 29 426 7	52	12	10539315	169	11 24 113 9	62	4
10536597	541	11 29 938 4	39	10	10539315	320	10 51 968 6	29	2
10536598	320	10 51 968 6	31	16	10539315	408	10 55 876 0	35	4
10536600	320	10 51 968 6	15	22	10539315	417	10 55 876 1	35	4
10537558	385	10 53 756 0	1	1	10539316	50	10 55 268 1	4	4
10537560	350	11 29 327 3	45	1	10539316	533	11 29 426 7	35	4
10537562	385	10 53 756 0	2	1	10539316	541	11 29 938 4	43	2
10537566	385	10 53 756 0	3	1	10539316	665	11 89 568 6	29	8
10537607	17	10 35 148 6	10	2	10539317	47	10 56 073 2	60	6
10537682	512	11 28 629 9	1	1	10539317	164	11 24 113 8	59	8
10538797	599	11 22 322 6	2	4	10539317	304	11 24 483 7	103	2
10538797	604	11 29 444 5	60	1	10539317	408	10 55 876 0	52	54
10538799	276	11 24 114 5	83	4	10539317	417	10 55 876 1	52	54
10538799	550	99 31 679 14	9	4	10539317	521	99 23 398 14	31	2
10538801	419	11 23 548 1	31	8	10539317	527	11 29 648 5	14	5
10538806	637	99 10 116 14	33	2	10539317	533	11 29 426 7	45	8
10538807	282	11 24 409 0	36	5	10539317	541	11 29 938 4	35	8
10538807	422	99 26 718 14	13	16	10539318	164	11 24 113 8	58	8

Item	Sheet	Assembly	Pos.	Quantity	Item	Sheet	Assembly	Pos.	Quantity
10539318	419	11 23 548 1	17	28	10540492	621	10 55 372 1	35	24
10539318	521	99 23 398 14	38	2	10540492	680	11 22 344 2	19	3
10539448	34	10 56 645 8	57	12	10540492	686	10 58 064 7	23	6
10539454	512	11 28 629 9	26	4	10540493	53	11 26 557 2	16	2
10539454	513	11 28 610 5	9	8	10540493	58	10 58 163 4	17	2
10539462	113	92 73 187	74	4	10540493	164	11 24 113 8	84	8
10539467	473	11 24 444 4	28	2	10540493	255	11 24 114 0	81	12
10539482	533	11 29 426 7	43	8	10540493	261	11 24 114 1	80	14
10539482	541	11 29 938 4	36	8	10540493	262	11 28 574 7	80	2
10539483	284	11 24 409 0	40	8	10540493	264	11 24 114 2	80	4
10539483	363	91 65 251 14	9	4	10540493	270	11 24 114 4	80	2
10539485	617	54 02 705 14	18	6	10540493	276	11 24 114 5	102	6
10539486	615	54 02 703 14	50	1	10540493	284	11 24 409 0	41	23
10539488	320	10 51 968 6	25	4	10540493	304	11 24 483 7	85	37
10539492	485	11 28 390 8	23	2	10540493	320	10 51 968 6	26	4
10539492	499	11 28 583 8	23	2	10540493	335	99 29 386 14	13	2
10539492	505	11 28 626 1	23	2	10540493	336	99 29 434 14	13	2
10539505	276	11 24 114 5	86	4	10540493	422	99 26 718 14	16	8
10539505	308	10 52 656 0	15	8	10540493	450	11 23 820 3	25	64
10539508	614	54 02 702 14	22	6	10540493	459	10 58 193 7	19	6
10539520	541	11 29 938 4	45	8	10540493	461	99 34 198 14	15	8
10539524	58	10 58 163 4	29	1	10540493	485	11 28 390 8	30	6
10539530	339	99 04 645 14	22	12	10540493	486	11 28 391 3	14	2
10539631	408	10 55 876 0	45	2	10540493	495	11 23 292 2	16	2
10539631	417	10 55 876 1	45	2	10540493	499	11 28 583 8	30	6
10539959	298	10 54 591 0	14	8	10540493	505	11 28 626 1	30	6
10539959	621	10 55 372 1	41	34	10540493	512	11 28 629 9	44	4
10539960	648	99 35 606 14	13	1	10540493	522	99 30 800 14	24	2
10539971	522	99 30 800 14	11	1	10540493	525	11 24 336 5	21	11
10539971	574	10 55 753 7	14	1	10540493	526	10 53 140 9	13	3
10539971	575	10 55 757 6	14	1	10540493	541	11 29 938 4	40	2
10539971	577	99 48 521 14	45	1	10540493	554	11 28 979 0	19	4
10540082	450	11 23 820 3	68	2	10540493	555	11 28 667 9	14	2
10540182	346	51 14 347 14	230	1	10540493	570	11 28 774 6	58	5
10540484	53	11 26 557 2	15	2	10540493	577	99 48 521 14	39	12
10540484	60	10 56 067 3	21	2	10540493	604	11 29 444 5	81	7
10540484	61	11 31 093 2	12	4	10540493	621	10 55 372 1	42	40
10540484	350	11 29 327 3	47	4	10540493	623	11 24 147 8	12	12
10540484	450	11 23 820 3	67	8	10540493	624	11 24 575 5	12	12
10540484	512	11 28 629 9	43	4	10540493	633	10 51 176 9	17	2
10540484	513	11 28 610 5	19	8	10540493	637	99 10 116 14	35	2
10540484	633	10 51 176 9	52	4	10540493	650	11 23 619 7	6	4
10540492	255	11 24 114 0	80	9	10540493	686	10 58 064 7	24	2
10540492	268	11 24 114 3	84	3	10540494	41	10 51 961 6	20	2
10540492	276	11 24 114 5	101	14	10540494	44	10 56 070 1	80	4
10540492	284	11 24 409 0	46	10	10540494	50	10 55 268 1	5	1
10540492	304	11 24 483 7	84	3	10540494	60	10 56 067 3	15	4
10540492	408	10 55 876 0	39	6	10540494	255	11 24 114 0	82	18
10540492	417	10 55 876 1	39	6	10540494	261	11 24 114 1	81	10
10540492	451	11 23 820 3	83	32	10540494	268	11 24 114 3	80	2
10540492	459	10 58 193 7	14	18	10540494	276	11 24 114 5	106	2
10540492	473	11 24 444 4	31	8	10540494	280	11 24 114 6	83	6
10540492	487	11 28 397 7	19	1	10540494	282	11 24 409 0	30	54
10540492	488	11 28 397 8	19	1	10540494	298	10 54 591 0	8	4
10540492	489	11 28 399 5	19	1	10540494	300	11 24 922 2	28	12
10540492	490	11 28 399 7	19	1	10540494	304	11 24 483 7	76	83
10540492	525	11 24 336 5	70	8	10540494	450	11 23 820 3	53	22
10540492	526	10 53 140 9	23	4	10540494	479	99 29 588 14	15	2
10540492	550	99 31 679 14	11	4	10540494	480	10 35 063 3	15	2
10540492	570	11 28 774 6	57	4	10540494	487	11 28 397 7	18	2

Item	Sheet	Assembly	Pos.	Quantity	Item	Sheet	Assembly	Pos.	Quantity
10540494	488	11 28 397 8	18	2	10540511	60	10 56 067 3	4	4
10540494	489	11 28 399 5	18	4	10540511	280	11 24 114 6	70	51
10540494	490	11 28 399 7	18	4	10540511	282	11 24 409 0	26	134
10540494	491	11 28 794 6	17	2	10540511	300	11 24 922 2	26	89
10540494	515	10 59 863 3	21	1	10540511	304	11 24 483 7	77	125
10540494	516	11 28 357 6	11	4	10540511	350	11 29 327 3	40	8
10540494	522	99 30 800 14	12	1	10540511	451	11 23 820 3	86	16
10540494	554	11 28 979 0	18	4	10540511	479	99 29 588 14	16	2
10540494	556	11 28 544 3	13	2	10540511	487	11 28 397 7	15	2
10540494	557	11 28 982 7	17	2	10540511	488	11 28 397 8	15	2
10540494	570	11 28 774 6	59	4	10540511	489	11 28 399 5	15	4
10540494	577	99 48 521 14	47	1	10540511	490	11 28 399 7	15	4
10540494	621	10 55 372 1	39	54	10540511	512	11 28 629 9	35	8
10540494	633	10 51 176 9	15	1	10540511	554	11 28 979 0	16	8
10540494	648	99 35 606 14	14	1	10540511	556	11 28 544 3	14	2
10540494	650	11 23 619 7	9	2	10540511	577	99 48 521 14	46	2
10540494	680	11 22 344 2	21	1	10540511	621	10 55 372 1	44	78
10540494	705	11 26 771 6	16	5	10540511	648	99 35 606 14	12	2
10540495	58	10 58 163 4	36	4	10540511	650	11 23 619 7	7	4
10540495	60	10 56 067 3	20	2	10540511	705	11 26 771 6	15	4
10540495	165	10 51 948 1	81	6	10540512	58	10 58 163 4	34	9
10540495	268	11 24 114 3	82	4	10540512	304	11 24 483 7	71	11
10540495	276	11 24 114 5	105	1	10540512	388	99 18 041 14	14	2
10540495	304	11 24 483 7	70	8	10540513	650	11 23 619 7	24	2
10540495	320	10 51 968 6	23	2	10540846	352	11 27 973 6	98	1
10540495	408	10 55 876 0	19	144	10541109	354	10 55 963 5	32	1
10540495	417	10 55 876 1	19	144	10541514	8	11 29 618 6	6	1
10540495	450	11 23 820 3	24	2	10541536	350	11 29 327 3	19	20
10540495	525	11 24 336 5	33	4	10541540	383	11 26 095 6	4	11
10540495	526	10 53 140 9	33	4	10541561	350	11 29 327 3	28	16
10540495	541	11 29 938 4	46	8	10541561	384	97 07 857 03	6	3
10540495	621	10 55 372 1	56	10	10541563	710	10 52 155 4	16	2
10540495	633	10 51 176 9	16	4	10541592	650	11 23 619 7	22	4
10540495	686	10 58 064 7	26	2	10541593	276	11 24 114 5	85	6
10540497	715	10 52 155 9	44	2	10541593	577	99 48 521 14	42	4
10540500	268	11 24 114 3	73	6	10541838	598	10 51 118 5	32	1
10540500	304	11 24 483 7	67	6	10542325	352	11 27 973 6	96	1
10540500	686	10 58 064 7	27	9	10542435	360	38 50 944 14	1	1
10540510	56	92 65 477 14	12	2	10542516	606	10 51 743 9	2	1
10540510	58	10 58 163 4	16	4	10543902	164	11 24 113 8	60	12
10540510	284	11 24 409 0	43	13	10543902	341	10 51 968 2	15	4
10540510	304	11 24 483 7	86	34	10543902	521	99 23 398 14	39	4
10540510	320	10 51 968 6	27	4	10543903	42	10 56 070 0	62	3
10540510	335	99 29 386 14	12	2	10543903	320	10 51 968 6	13	4
10540510	336	99 29 434 14	12	2	10543904	42	10 56 070 0	63	3
10540510	451	11 23 820 3	79	49	10543905	164	11 24 113 8	61	8
10540510	485	11 28 390 8	28	5	10543905	320	10 51 968 6	28	12
10540510	499	11 28 583 8	28	5	10543907	75	11 24 773 5	57	4
10540510	505	11 28 626 1	28	5	10543910	408	10 55 876 0	27	8
10540510	512	11 28 629 9	34	4	10543910	417	10 55 876 1	27	8
10540510	513	11 28 610 5	15	4	10543914	164	11 24 113 8	62	2
10540510	525	11 24 336 5	26	12	10543917	433	10 57 462 9	4	1
10540510	526	10 53 140 9	14	6	10543918	637	99 10 116 14	48	2
10540510	554	11 28 979 0	17	4	10543919	264	11 24 114 2	63	2
10540510	570	11 28 774 6	47	2	10543919	473	11 24 444 4	48	2
10540510	650	11 23 619 7	26	8	10543919	582	99 38 329 14	43	1
10540510	686	10 58 064 7	32	4	10543919	637	99 10 116 14	51	2
10540511	41	10 51 961 6	14	14	10543920	320	10 51 968 6	14	22
10540511	50	10 55 268 1	7	2	10543920	408	10 55 876 0	44	4
10540511	58	10 58 163 4	55	4	10543920	412	96 93 178 01	87	2

Item	Sheet	Assembly	Pos.	Quantity	Item	Sheet	Assembly	Pos.	Quantity
10543920	417	10 55 876 1	41	4	10544174	640	99 10 125 14	4	1
10543921	419	11 23 548 1	18	4	10544175	433	10 57 462 9	3	1
10543921	473	11 24 444 4	49	2	10544176	408	10 55 876 0	33	12
10543922	75	11 24 773 5	58	4	10544176	417	10 55 876 1	33	12
10543922	606	10 51 743 9	25	4	10544177	408	10 55 876 0	28	64
10543924	424	11 22 050 0	15	4	10544177	410	10 55 716 2	13	4
10543924	439	11 22 050 1	15	4	10544177	417	10 55 876 1	28	64
10543925	412	96 93 178 01	68	12	10545451	64	10 51 969 4	4	1
10543932	408	10 55 876 0	4	4	10545854	408	10 55 876 0	22	2
10543932	417	10 55 876 1	4	4	10545854	417	10 55 876 1	22	2
10543944	408	10 55 876 0	25	12	10545854	473	11 24 444 4	47	4
10543944	417	10 55 876 1	25	12	10545910	282	11 24 409 0	2	1
10543975	451	11 23 820 3	75	8	10545911	282	11 24 409 0	3	1
10543975	485	11 28 390 8	22	4	10545914	282	11 24 409 0	5	1
10543975	499	11 28 583 8	22	4	10545915	282	11 24 409 0	6	1
10543975	505	11 28 626 1	22	4	10545916	282	11 24 409 0	7	1
10544017	164	11 24 113 8	63	2	10545917	282	11 24 409 0	8	1
10544044	435	11 26 260 6	751	4	10545918	282	11 24 409 0	10	1
10544050	392	11 25 903 1	18	16	10545957	282	11 24 409 0	11	1
10544065	58	10 58 163 4	26	8	10545958	282	11 24 409 0	12	1
10544068	167	10 57 532 2	63	4	10545968	298	10 54 591 0	3	1
10544092	75	11 24 773 5	63	4	10545969	298	10 54 591 0	4	1
10544093	75	11 24 773 5	62	4	10545970	298	10 54 591 0	5	1
10544105	341	10 51 968 2	12	48	10546335	298	10 54 591 0	6	1
10544113	644	10 51 971 3	16	8	10546407	298	10 54 591 0	9	2
10544121	644	10 51 971 3	17	8	10546993	470	11 27 536 5	20	2
10544154	164	11 24 113 8	80	10	10547876	28	11 24 519 0	32	2
10544155	450	11 23 820 3	36	8	10547904	324	10 55 156 3	10	1
10544155	485	11 28 390 8	29	4	10548543	8	11 29 618 6	35	1
10544155	499	11 28 583 8	29	4	10548553	339	99 04 645 14	59	1
10544155	505	11 28 626 1	29	4	10549545	350	11 29 327 3	53	1
10544155	533	11 29 426 7	58	2	10549547	350	11 29 327 3	51	1
10544157	606	10 51 743 9	18	4	10549800	350	11 29 327 3	52	1
10544158	164	11 24 113 8	81	2	10550739	354	10 55 963 5	75	22
10544159	644	10 51 971 3	30	8	10550911	270	11 24 114 4	10	1
10544172	164	11 24 113 8	72	48	10550970	392	11 25 903 1	2	1
10544172	304	11 24 483 7	102	2	10550993	512	11 28 629 9	12	2
10544172	341	10 51 968 2	14	4	10551191	392	11 25 903 1	21	2
10544172	408	10 55 876 0	36	12	10551548	392	11 25 903 1	9	2
10544172	417	10 55 876 1	36	12	10551563	320	10 51 968 6	10	1
10544172	419	11 23 548 1	15	28	10551576	453	10 51 826 1	2	1
10544172	450	11 23 820 3	43	8	10551670	577	99 48 521 14	33	2
10544172	485	11 28 390 8	26	4	10552085	320	10 51 968 6	4	1
10544172	499	11 28 583 8	26	4	10552161	342	10 51 968 3	2	1
10544172	505	11 28 626 1	26	4	10552306	50	10 55 268 1	1	1
10544172	533	11 29 426 7	51	2	10552633	408	10 55 876 0	14	16
10544172	665	11 89 568 6	20	8	10552633	417	10 55 876 1	14	16
10544173	50	10 55 268 1	6	4	10552681	6	11 24 047 9	20	1
10544173	451	11 23 820 3	74	8	10553403	275	11 24 114 5	46	6
10544173	485	11 28 390 8	27	4	10553721	3	01 38 281 14	553	1
10544173	499	11 28 583 8	27	4	10553922	75	11 24 773 5	11	1
10544173	505	11 28 626 1	27	4	10554336	169	11 24 113 9	70	1
10544174	264	11 24 114 2	75	2	10554594	673	10 53 635 1	2	1
10544174	408	10 55 876 0	21	2	10555261	641	99 23 420 14	8	2
10544174	417	10 55 876 1	21	2	10555411	385	10 53 756 0	9	1
10544174	419	11 23 548 1	19	4	10555972	326	10 55 597 3	900	1
10544174	424	11 22 050 0	14	4	10555973	324	10 55 156 3	2	1
10544174	439	11 22 050 1	14	4	10556597	254	11 24 114 0	12	1
10544174	473	11 24 444 4	15	8	10557117	650	11 23 619 7	5	1
10544174	606	10 51 743 9	17	8	10557161	408	10 55 876 0	2	1

Item	Sheet	Assembly	Pos.	Quantity	Item	Sheet	Assembly	Pos.	Quantity
10557161	417	10 55 876 1	2	1	10567564	665	11 89 568 6	30	3
10557162	409	10 55 716 1	1	1	10567619	254	11 24 114 0	13	2
10557163	409	10 55 716 1	2	1	10567622	254	11 24 114 0	31	4
10557537	564	11 24 263 6	19	1	10567956	408	10 55 876 0	5	8
10557576	564	11 24 263 6	20	1	10567956	417	10 55 876 1	5	8
10558629	556	11 28 544 3	11	2	10570894	710	10 52 155 4	4	1
10558760	389	11 23 547 8	10	1	10571340	254	11 24 114 0	14	2
10558761	389	11 23 547 8	11	1	10571619	595	11 27 148 8	7	1
10558762	408	10 55 876 0	34	1	10572054	665	11 89 568 6	27	4
10558762	417	10 55 876 1	34	1	10572058	665	11 89 568 6	25	4
10558857	450	11 23 820 3	45	2	10572075	368	10 22 645 4	36	1
10558857	484	11 28 725 5	12	2	10572236	402	10 55 154 8	1	1
10559163	619	10 55 372 1	18	2	10572236	454	10 55 157 6	1	2
10559635	351	11 27 973 6	8	1	10572241	402	10 55 154 8	3	1
10559638	354	10 55 963 5	25	1	10572242	454	10 55 157 6	3	1
10560137	4	01 38 281 14	843	1	10572706	50	10 55 268 1	2	2
10560228	444	10 56 183 8	1	1	10572939	455	10 53 044 6	21	1
10560673	6	11 24 047 9	45	1	10573891	595	11 27 148 8	11	1
10560674	60	10 56 067 3	1	1	10573892	587	10 50 435 2	2	1
10560687	300	11 24 922 2	10	1	10573893	587	10 50 435 2	3	2
10560688	300	11 24 922 2	17	1	10573951	706	10 52 293 0	10	1
10560690	300	11 24 922 2	16	1	10574043	589	11 27 463 8	3	1
10560691	300	11 24 922 2	11	1	10574237	254	11 24 114 0	10	1
10560692	300	11 24 922 2	12	1	10574239	261	11 24 114 1	1	1
10560694	6	11 24 047 9	49	1	10574357	288	11 24 409 1	19	2
10560700	6	11 24 047 9	15	1	10574364	288	11 24 409 1	18	2
10560701	42	10 56 070 0	3	1	10574629	424	11 22 050 0	11	4
10560703	44	10 56 070 1	3	1	10574629	439	11 22 050 1	11	4
10560732	6	11 24 047 9	16	1	10574630	433	10 57 462 9	1	1
10560733	47	10 56 073 2	10	1	10574631	433	10 57 462 9	2	1
10560734	48	10 56 073 3	10	1	10574837	619	10 55 372 1	15	1
10561780	341	10 51 968 2	4	1	10575306	254	11 24 114 0	4	1
10561838	443	10 56 187 5	1	1	10575307	254	11 24 114 0	5	1
10561875	2	01 38 281 14	50	1	10575322	165	10 51 948 1	3	1
10561944	533	11 29 426 7	28	2	10575323	167	10 57 532 2	3	1
10562095	604	11 29 444 5	70	4	10575566	261	11 24 114 1	10	1
10562107	261	11 24 114 1	28	1	10575567	261	11 24 114 1	11	1
10563073	282	11 24 409 0	16	1	10575599	510	10 53 141 3	21	1
10563082	282	11 24 409 0	25	1	10575705	714	10 52 155 9	38	1
10563099	298	10 54 591 0	1	1	10575966	302	11 24 483 7	17	1
10563643	28	11 24 519 0	13	1	10575967	302	11 24 483 7	13	1
10563800	474	10 53 120 7	41	1	10575968	302	11 24 483 7	15	1
10564158	313	51 22 527 14	14	1	10575969	302	11 24 483 7	18	1
10564279	695	99 21 473 14	11	1	10575970	302	11 24 483 7	23	8
10564433	665	11 89 568 6	10	4	10575971	302	11 24 483 7	37	3
10565367	701	10 56 536 8	1	1	10575980	302	11 24 483 7	30	3
10565368	699	11 23 189 1	12	1	10575981	302	11 24 483 7	11	1
10565639	459	10 58 193 7	11	2	10575984	302	11 24 483 7	14	1
10565777	296	10 56 580 8	1	1	10575985	302	11 24 483 7	20	2
10565808	286	11 24 409 1	13	1	10576104	302	11 24 483 7	19	1
10565879	296	10 56 580 8	10	1	10576212	526	10 53 140 9	21	1
10565889	296	10 56 580 8	2	1	10576245	565	10 53 141 0	21	1
10566030	26	10 22 592 5	4	1	10576251	566	10 57 624 5	20	1
10566237	286	11 24 409 1	6	1	10577229	275	11 24 114 5	40	1
10566238	295	10 56 623 7	1	1	10578321	58	10 58 163 4	12	1
10566239	295	10 56 623 7	12	1	10578343	58	10 58 163 4	33	1
10566458	29	11 24 519 0	103	1	10578486	686	10 58 064 7	10	1
10566842	286	11 24 409 1	1	1	10578835	286	11 24 409 1	3	1
10567084	708	10 56 013 7	31	1	10578836	290	10 57 883 5	1	1
10567120	78	11 24 682 0	450	1	10578841	290	10 57 883 5	12	1

Item	Sheet	Assembly	Pos.	Quantity	Item	Sheet	Assembly	Pos.	Quantity
10578845	6	11 24 047 9	31	2	10585914	619	10 55 372 1	25	1
10578971	292	10 57 897 6	10	1	10585915	619	10 55 372 1	26	1
10578972	292	10 57 897 6	1	1	10585916	619	10 55 372 1	27	1
10578976	286	11 24 409 1	4	5	10585917	619	10 55 372 1	28	1
10579070	167	10 57 532 2	50	6	10585919	619	10 55 372 1	30	1
10579104	165	10 51 948 1	10	1	10585920	619	10 55 372 1	31	1
10579145	295	10 56 623 7	2	1	10585923	619	10 55 372 1	10	1
10579155	167	10 57 532 2	11	2	10585924	619	10 55 372 1	11	1
10579397	294	10 57 940 0	1	1	10585925	619	10 55 372 1	12	1
10579400	286	11 24 409 1	5	1	10585926	619	10 55 372 1	13	1
10579423	294	10 57 940 0	12	1	10585933	619	10 55 372 1	16	2
10579454	294	10 57 940 0	2	1	10585936	619	10 55 372 1	17	1
10579680	601	11 29 551 4	12	1	10586253	58	10 58 163 4	50	1
10579755	164	11 24 113 8	3	2	10586854	621	10 55 372 1	62	1
10579757	302	11 24 483 7	26	1	10588168	58	10 58 163 4	18	1
10579779	164	11 24 113 8	5	1	10588224	689	10 51 728 1	10	1
10579806	275	11 24 114 5	41	1	10588723	467	59 20 224 14	1	1
10579877	689	10 51 728 1	7	1	10588725	467	59 20 224 14	4	1
10579979	60	10 56 067 3	7	1	10588729	467	59 20 224 14	5	1
10580170	73	11 24 048 0	19	1	10588730	42	10 56 070 0	12	3
10580585	41	10 51 961 6	12	1	10589204	450	11 23 820 3	58	2
10580647	682	11 89 400 8	11	1	10589483	410	10 55 716 2	14	1
10581173	275	11 24 114 5	20	2	10590183	410	10 55 716 2	12	4
10581486	294	10 57 940 0	15	1	10590801	536	11 29 488 4	10	1
10581590	288	11 24 409 1	21	1	10591343	350	11 29 327 3	54	1
10581634	6	11 24 047 9	35	1	10591435	17	10 35 148 6	8	1
10581765	254	11 24 114 0	58	1	10591681	586	79 04 112 14	50	4
10581765	275	11 24 114 5	50	1	10591682	586	79 04 112 14	18	4
10581937	450	11 23 820 3	48	1	10592334	515	10 59 863 3	19	1
10581980	451	11 23 820 3	84	1	10592555	339	99 04 645 14	30	1
10581981	451	11 23 820 3	85	1	10592569	2	01 38 281 14	14	1
10581982	451	11 23 820 3	95	1	10592619	302	11 24 483 7	43	1
10581992	450	11 23 820 3	51	2	10592621	302	11 24 483 7	44	1
10581999	459	10 58 193 7	21	2	10593096	64	10 51 969 4	23	8
10582001	451	11 23 820 3	77	1	10593474	84	11 21 991 0	3	1
10582001	459	10 58 193 7	22	1	10593504	78	11 24 682 0	320	2
10582020	450	11 23 820 3	50	2	10593544	350	11 29 327 3	48	2
10583346	280	11 24 114 6	10	1	10593554	350	11 29 327 3	49	1
10583347	280	11 24 114 6	11	1	10594064	75	11 24 773 5	13	1
10583559	300	11 24 922 2	15	1	10595126	324	10 55 156 3	200	1
10583611	300	11 24 922 2	19	1	10595280	168	10 58 017 0	12	2
10583612	300	11 24 922 2	20	1	10595399	29	11 24 519 0	72	1
10583642	284	11 24 409 0	51	1	10597776	344	10 55 216 1	620	4
10583845	324	10 55 156 3	4	1	10597981	60	10 56 067 3	2	2
10583864	324	10 55 156 3	1	1	10598295	261	11 24 114 1	55	4
10583865	324	10 55 156 3	3	1	10598537	167	10 57 532 2	8	1
10584105	284	11 24 409 0	50	1	10598633	514	99 06 461 14	1	1
10584123	284	11 24 409 0	47	1	10598700	397	51 24 059 14	9	1
10584124	284	11 24 409 0	48	1	10598777	399	11 22 473 8	23	2
10584210	284	11 24 409 0	49	1	10598959	459	10 58 193 7	10	1
10584544	44	10 56 070 1	15	1	10599053	459	10 58 193 7	24	1
10584671	378	59 22 930 14	50	1	10599206	356	10 51 907 9	31	1
10584965	586	79 04 112 14	11	4	10599212	597	11 27 148 9	2	2
10584965	593	79 04 871 14	11	4	10599215	356	10 51 907 9	32	1
10585108	462	11 29 259 8	2	1	10599567	89	11 06 730 4	6	1
10585909	619	10 55 372 1	20	1	10599571	302	11 24 483 7	46	1
10585910	619	10 55 372 1	21	1	10599614	302	11 24 483 7	47	1
10585911	619	10 55 372 1	22	1	10599681	538	11 24 611 6	12	1
10585912	619	10 55 372 1	23	1	10599757	254	11 24 114 0	6	1
10585913	619	10 55 372 1	24	2	10599758	254	11 24 114 0	7	1

Item	Sheet	Assembly	Pos.	Quantity	Item	Sheet	Assembly	Pos.	Quantity
10599759	254	11 24 114 0	8	1	11212730	89	11 06 730 4	10	1
10599796	259	11 28 734 7	13	1	11214818	356	10 51 907 9	10	1
10599854	302	11 24 483 7	49	1	11214820	305	10 51 127 4	10	1
10663904	362	11 26 095 7	32	1	11215298	625	11 21 546 1	3	1
10663954	362	11 26 095 7	50	2	11215302	627	11 21 529 8	50	1
10664204	28	11 24 519 0	31	2	11215384	164	11 24 113 8	6	1
10677274	362	11 26 095 7	23	1	11215385	264	11 24 114 2	13	1
10678754	275	11 24 114 5	23	2	11215461	3	01 38 281 14	566	1
10685952	598	10 51 118 5	31	1	11215462	625	11 21 546 1	1	1
10687924	358	10 03 610 7	82	1	11215698	152	10 22 601 3	2	1
10687925	358	10 03 610 7	80	1	11215699	152	10 22 601 3	3	1
10687926	358	10 03 610 7	81	1	11215707	154	11 21 593 6	23	4
10800103	361	69 31 685 14	2	1	11215913	152	10 22 601 3	1	1
10800265	251	10 13 307 7	1	1	11215936	153	11 21 591 3	1	1
10801399	237	10 14 511 2	17	2	11215942	157	10 11 497 5	1	1
10801869	131	10 12 323 6	16	1	11215951	148	10 35 160 3	3	4
10802833	154	11 21 593 6	22	1	11215951	157	10 11 497 5	3	4
10813933	217	10 14 588 5	9	2	11215962	570	11 28 774 6	4	1
10813934	237	10 14 511 2	18	1	11215976	604	11 29 444 5	28	1
10813935	217	10 14 588 5	12	2	11216088	58	10 58 163 4	32	1
10814912	586	79 04 112 14	12	2	11216342	423	11 26 260 5	3	1
10816958	275	11 24 114 5	49	1	11216342	438	11 26 261 0	3	1
10870540	34	10 56 645 8	251	10.7	11217079	82	11 21 992 7	5	3
10870540	697	10 56 427 9	251	3.42	11217079	83	11 21 992 9	5	3
10871759	275	11 24 114 5	21	4	11217169	275	11 24 114 5	47	6
10883842	247	10 14 572 5	1	1	11217232	282	11 24 409 0	18	4
11000593	238	10 14 622 4	13	2	11217289	167	10 57 532 2	5	1
11001743	210	10 13 508 0	6	1	11217500	699	11 23 189 1	11	1
11002988	216	10 14 333 9	9	1	11217837	144	11 22 127 4	30	1
11004752	182	10 14 861 5	3	2	11218236	450	11 23 820 3	70	1
11004752	203	10 13 394 7	2	3	11218695	2	01 38 281 14	52	1
11005281	238	10 14 622 4	10	7	11219056	272	10 55 091 1	6	2
11005554	273	10 30 300 7	17	1	11219067	272	10 55 091 1	7	2
11007215	248	10 15 028 8	15	1	11219069	272	10 55 091 1	5	2
11007749	119	10 12 321 4	14	1	11219179	29	11 24 519 0	65	2
11007751	119	10 12 321 4	13	1	11219265	477	11 23 749 8	10	2
11008055	221	10 14 736 9	3	1	11219265	494	11 23 290 7	10	2
11008787	275	11 24 114 5	9	2	11219265	495	11 23 292 2	11	2
11060522	264	11 24 114 2	20	1	11219265	579	11 25 204 2	10	2
11066168	202	10 13 394 5	4	1	11219350	79	10 53 430 7	4	1
11066361	202	10 13 394 5	3	2	11219356	80	11 21 990 2	4	1
11067304	84	11 21 991 0	5	1	11219368	84	11 21 991 0	2	1
11067305	84	11 21 991 0	6	1	11219369	84	11 21 991 0	4	1
11067653	272	10 55 091 1	8	2	11219373	92	11 21 935 0	4	8
11067863	275	11 24 114 5	54	4	11219374	92	11 21 935 0	8	1
11080525	604	11 29 444 5	3	1	11219375	93	11 21 991 7	2	2
11082116	207	10 15 286 7	3	1	11219376	94	11 21 991 8	10	1
11082116	212	10 13 543 2	2	1	11219647	354	10 55 963 5	58	1
11082158	275	11 24 114 5	12	2	11219851	495	11 23 292 2	12	2
11082454	275	11 24 114 5	22	2	11219851	579	11 25 204 2	11	2
11088130	185	10 13 451 7	1	1	11219856	494	11 23 290 7	11	1
11100007	152	10 22 601 3	5	1	11219861	495	11 23 292 2	10	1
11100081	249	10 13 555 3	1	1	11219883	698	11 22 037 2	1	1
11101351	277	11 24 240 8	4	1	11219902	79	10 53 430 7	1	1
11110051	604	11 29 444 5	4	1	11219905	79	10 53 430 7	2	1
11118160	176	10 13 845 0	6	1	11219907	4	01 38 281 14	702	1
11170484	129	10 14 131 6	26	2	11219910	79	10 53 430 7	3	1
11170484	135	10 13 803 4	26	2	11219917	79	10 53 430 7	5	1
11181806	241	10 14 286 4	2	2	11219918	79	10 53 430 7	6	1
11210606	593	79 04 871 14	5	1	11219920	80	11 21 990 2	1	1

Item	Sheet	Assembly	Pos.	Quantity	Item	Sheet	Assembly	Pos.	Quantity
11219922	80	11 21 990 2	2	1	11226139	346	51 14 347 14	190	4
11219924	80	11 21 990 2	3	1	11226142	346	51 14 347 14	200	1
11219925	81	11 21 990 5	1	1	11226144	346	51 14 347 14	210	4
11219927	81	11 21 990 5	2	1	11226148	346	51 14 347 14	220	1
11219929	81	11 21 990 5	3	1	11226627	352	11 27 973 6	83	1
11219930	84	11 21 991 0	1	1	11226980	657	59 21 584 14	6	1
11219933	84	11 21 991 0	8	1	11227037	2	01 38 281 14	26	1
11219934	93	11 21 991 7	1	1	11227045	340	11 22 703 7	10	1
11219936	94	11 21 991 8	11	8	11227046	340	11 22 703 7	11	1
11220320	399	11 22 473 8	20	2	11227203	45	10 51 572 4	2	1
11220320	399	11 22 473 8	21	2	11228227	650	11 23 619 7	25	1
11220372	4	01 38 281 14	723	1	11229182	17	10 35 148 6	4	1
11220468	698	11 22 037 2	5	1	11229183	17	10 35 148 6	5	1
11220477	698	11 22 037 2	10	1	11229184	17	10 35 148 6	7	1
11220500	423	11 26 260 5	1	1	11229185	17	10 35 148 6	9	1
11220501	438	11 26 261 0	1	1	11229186	20	10 59 143 5	1	2
11220932	142	10 22 650 5	4	1	11229464	272	10 55 091 1	3	1
11221267	142	10 22 650 5	5	1	11229635	28	11 24 519 0	30	3
11221268	142	10 22 650 5	1	1	11229706	462	11 29 259 8	4	1
11221274	143	11 22 126 8	1	1	11229709	644	10 51 971 3	4	1
11221276	143	11 22 126 8	5	1	11229805	264	11 24 114 2	30	2
11221283	150	11 22 127 6	2	1	11230237	473	11 24 444 4	44	9
11222783	29	11 24 519 0	120	3	11230438	403	51 33 141 14	4	1
11222864	713	51 00 959 14	200	1	11230849	473	11 24 444 4	18	2
11223086	599	11 22 322 6	1	1	11231109	39	99 14 627 14	4	1
11223123	52	11 27 315 5	12	1	11231269	425	10 53 039 8	2	1
11223226	598	10 51 118 5	10	1	11231270	425	10 53 039 8	3	1
11223233	339	99 04 645 14	4	1	11231317	427	11 89 322 8	3	1
11223234	339	99 04 645 14	20	8	11231319	427	11 89 322 8	5	1
11223305	21	59 21 458 14	2	2	11231322	428	11 23 126 9	1	1
11223442	678	11 21 990 7	1	1	11231336	429	11 23 127 0	1	1
11223490	680	11 22 344 2	12	1	11231673	512	11 28 629 9	19	2
11223691	352	11 27 973 6	211	1	11231891	4	01 38 281 14	724	1
11223693	365	11 22 369 1	5	2	11232399	448	11 23 820 3	4	1
11223717	352	11 27 973 6	210	2	11232788	699	11 23 189 1	22	1
11223999	544	10 53 145 5	20	2	11232907	481	11 24 570 5	14	8
11224738	397	51 24 059 14	2	1	11232907	497	11 24 571 1	14	8
11224740	397	51 24 059 14	25	1	11232907	503	11 24 571 7	14	16
11224761	399	11 22 473 8	7	1	11232907	509	11 24 132 4	15	2
11224762	399	11 22 473 8	12	2	11232907	525	11 24 336 5	59	2
11224767	399	11 22 473 8	22	4	11232907	551	11 24 084 9	13	4
11225259	300	11 24 922 2	23	3	11232907	558	11 24 162 7	13	4
11225402	284	11 24 409 0	63	2	11232907	561	11 24 163 1	13	8
11226015	346	51 14 347 14	10	1	11232907	564	11 24 263 6	14	6
11226016	346	51 14 347 14	20	1	11232922	481	11 24 570 5	15	4
11226017	346	51 14 347 14	30	1	11232922	497	11 24 571 1	15	4
11226019	346	51 14 347 14	40	1	11232922	503	11 24 571 7	15	4
11226023	346	51 14 347 14	60	2	11232922	509	11 24 132 4	16	4
11226035	346	51 14 347 14	80	1	11232922	551	11 24 084 9	14	2
11226084	346	51 14 347 14	90	1	11232922	558	11 24 162 7	14	2
11226086	346	51 14 347 14	92	1	11232922	561	11 24 163 1	14	2
11226088	346	51 14 347 14	100	2	11232922	564	11 24 263 6	15	2
11226090	346	51 14 347 14	110	1	11233062	521	99 23 398 14	42	1
11226118	346	51 14 347 14	130	1	11233487	427	11 89 322 8	1	1
11226127	346	51 14 347 14	140	1	11233727	68	10 22 540 8	1	1
11226129	346	51 14 347 14	150	1	11233729	68	10 22 540 8	3	2
11226130	346	51 14 347 14	160	1	11233730	68	10 22 540 8	4	1
11226133	346	51 14 347 14	165	1	11233731	68	10 22 540 8	5	1
11226135	346	51 14 347 14	170	1	11233731	68	10 22 540 8	6	1
11226137	346	51 14 347 14	180	4	11233731	467	59 20 224 14	2	1

Item	Sheet	Assembly	Pos.	Quantity	Item	Sheet	Assembly	Pos.	Quantity
11233732	68	10 22 540 8	7	1	11239908	657	59 21 584 14	7	1
11233742	68	10 22 540 8	9	1	11239912	655	51 16 404 14	1	1
11233749	68	10 22 540 8	10	1	11239915	655	51 16 404 14	3	1
11233751	68	10 22 540 8	11	1	11239916	655	51 16 404 14	4	1
11234375	302	11 24 483 7	57	2	11240009	451	11 23 820 3	98	3
11234405	302	11 24 483 7	58	1	11240099	680	11 22 344 2	16	2
11234413	302	11 24 483 7	59	1	11240479	2	01 38 281 14	5	1
11234650	352	11 27 973 6	150	4	11240480	71	11 26 560 6	10	1
11234767	29	11 24 519 0	130	30	11240499	684	10 53 352 4	3	1
11234767	276	11 24 114 5	125	20	11240503	684	10 53 352 4	1	1
11234799	164	11 24 113 8	15	2	11240848	551	11 24 084 9	10	1
11235246	666	11 89 568 7	2	1	11240849	3	01 38 281 14	98	1
11235248	667	11 23 524 6	2	1	11241005	64	10 51 969 4	22	16
11235361	64	10 51 969 4	11	1	11241137	73	11 24 048 0	4	1
11235382	64	10 51 969 4	21	1	11241138	73	11 24 048 0	12	1
11235478	2	01 38 281 14	33	1	11241139	73	11 24 048 0	20	1
11235480	389	11 23 547 8	4	1	11241140	73	11 24 048 0	28	1
11235481	389	11 23 547 8	12	1	11241141	73	11 24 048 0	29	1
11235482	419	11 23 548 1	35	2	11241142	73	11 24 048 0	30	1
11236106	586	79 04 112 14	19	12	11241143	73	11 24 048 0	40	1
11236106	593	79 04 871 14	19	12	11241144	73	11 24 048 0	50	1
11236108	586	79 04 112 14	20	12	11241145	73	11 24 048 0	60	1
11236108	593	79 04 871 14	20	12	11241146	73	11 24 048 0	90	1
11236197	4	01 38 281 14	644	1	11241209	557	11 28 982 7	10	1
11236233	676	11 23 626 6	11	1	11241269	259	11 28 734 7	12	1
11236266	4	01 38 281 14	680	2	11241324	2	01 38 281 14	81	1
11236318	557	11 28 982 7	11	1	11241478	3	01 38 281 14	554	1
11236511	167	10 57 532 2	45	1	11241625	558	11 24 162 7	10	1
11236513	167	10 57 532 2	47	1	11241627	3	01 38 281 14	100	1
11236514	167	10 57 532 2	43	1	11241630	561	11 24 163 1	10	1
11236515	167	10 57 532 2	41	1	11241631	3	01 38 281 14	104	4
11236517	167	10 57 532 2	40	1	11241756	28	11 24 519 0	40	1
11236518	167	10 57 532 2	46	1	11242408	275	11 24 114 5	6	1
11236557	600	11 25 016 2	10	1	11242422	680	11 22 344 2	23	2
11236707	700	11 21 750 0	1	1	11242597	420	11 24 812 0	10	4
11236708	700	11 21 750 0	2	1	11242636	3	01 38 281 14	105	1
11236709	700	11 21 750 0	3	1	11242757	275	11 24 114 5	42	1
11236711	700	11 21 750 0	4	1	11242988	4	01 38 281 14	647	1
11236712	700	11 21 750 0	5	1	11243365	523	11 24 618 2	10	1
11236713	700	11 21 750 0	6	1	11243383	491	11 28 794 6	10	1
11236714	700	11 21 750 0	7	1	11244040	302	11 24 483 7	52	2
11236937	35	11 23 908 2	10	1	11244090	71	11 26 560 6	11	1
11237498	471	11 23 937 8	13	4	11244091	282	11 24 409 0	1	1
11237498	531	11 24 475 9	13	6	11244092	286	11 24 409 1	2	1
11237759	586	79 04 112 14	9	4	11244094	282	11 24 409 0	28	1
11238170	604	11 29 444 5	19	1	11244444	471	11 23 937 8	10	1
11238203	2	01 38 281 14	59	1	11244487	73	11 24 048 0	3	1
11238878	518	69 28 155 14	10	1	11244498	284	11 24 409 0	53	1
11239010	451	11 23 820 3	92	1	11244758	282	11 24 409 0	14	1
11239082	29	11 24 519 0	111	1	11244759	523	11 24 618 2	11	1
11239085	35	11 23 908 2	11	1	11244837	71	11 26 560 6	14	1
11239378	2	01 38 281 14	63	1	11244865	282	11 24 409 0	13	1
11239595	277	11 24 240 8	6	1	11245109	533	11 29 426 7	27	1
11239698	473	11 24 444 4	37	2	11245190	6	11 24 047 9	3	1
11239740	473	11 24 444 4	22	1	11245703	481	11 24 570 5	10	1
11239880	655	51 16 404 14	2	1	11245705	2	01 38 281 14	67	1
11239880	657	59 21 584 14	2	1	11245709	497	11 24 571 1	10	1
11239895	657	59 21 584 14	3	1	11245711	2	01 38 281 14	71	1
11239897	657	59 21 584 14	4	1	11245715	503	11 24 571 7	10	1
11239904	657	59 21 584 14	5	1	11245717	2	01 38 281 14	79	4

Item	Sheet	Assembly	Pos.	Quantity	Item	Sheet	Assembly	Pos.	Quantity
11245755	623	11 24 147 8	1	2	11249772	395	10 55 097 0	10	3
11245756	624	11 24 575 5	1	1	11249800	164	11 24 113 8	2	2
11245757	624	11 24 575 5	2	2	11249804	396	11 89 617 8	9	1
11245758	624	11 24 575 5	3	1	11249889	164	11 24 113 8	9	2
11245759	623	11 24 147 8	2	2	11250162	3	01 38 281 14	447	1
11245760	624	11 24 575 5	4	4	11250222	164	11 24 113 8	4	2
11245766	623	11 24 147 8	5	2	11250329	164	11 24 113 8	30	4
11245767	623	11 24 147 8	6	2	11250382	254	11 24 114 0	3	1
11245922	623	11 24 147 8	3	2	11250430	261	11 24 114 1	20	1
11246116	523	11 24 618 2	12	1	11250438	261	11 24 114 1	21	1
11246182	3	01 38 281 14	90	1	11250439	261	11 24 114 1	25	1
11246658	408	10 55 876 0	10	64	11250555	254	11 24 114 0	20	1
11246658	417	10 55 876 1	10	64	11250556	254	11 24 114 0	21	1
11246790	264	11 24 114 2	10	1	11250564	254	11 24 114 0	23	1
11246820	75	11 24 773 5	1	1	11250970	372	11 27 901 2	3	1
11246836	264	11 24 114 2	15	1	11250972	78	11 24 682 0	30	1
11246919	302	11 24 483 7	42	1	11250974	78	11 24 682 0	70	3
11247011	302	11 24 483 7	38	1	11250985	262	11 28 574 7	3	1
11247023	304	11 24 483 7	61	1	11250990	78	11 24 682 0	420	4
11247029	302	11 24 483 7	28	1	11250998	78	11 24 682 0	468	8
11247121	28	11 24 519 0	11	1	11251056	261	11 24 114 1	8	1
11247122	160	11 24 448 7	11	1	11251232	435	11 26 260 6	2	1
11247131	304	11 24 483 7	62	1	11251232	441	11 26 261 1	2	1
11247158	302	11 24 483 7	48	1	11251423	396	11 89 617 8	8	2
11247162	264	11 24 114 2	11	1	11251434	396	11 89 617 8	6	1
11247207	302	11 24 483 7	50	1	11251437	396	11 89 617 8	5	1
11247208	264	11 24 114 2	12	1	11252042	577	99 48 521 14	51	2
11247375	302	11 24 483 7	22	1	11252203	280	11 24 114 6	1	1
11247464	268	11 24 114 3	9	1	11252205	280	11 24 114 6	16	1
11247607	268	11 24 114 3	8	1	11252206	280	11 24 114 6	17	1
11247688	164	11 24 113 8	1	1	11252207	280	11 24 114 6	2	1
11247735	73	11 24 048 0	2	1	11252208	280	11 24 114 6	8	1
11247790	660	11 89 568 5	4	1	11252211	280	11 24 114 6	3	1
11247791	302	11 24 483 7	29	1	11252213	280	11 24 114 6	9	1
11247792	302	11 24 483 7	31	9	11252214	280	11 24 114 6	4	1
11247799	302	11 24 483 7	32	2	11252215	280	11 24 114 6	5	1
11247808	302	11 24 483 7	33	1	11252216	280	11 24 114 6	6	1
11247880	264	11 24 114 2	14	1	11252578	280	11 24 114 6	15	1
11247913	404	10 55 119 1	1	4	11253077	78	11 24 682 0	140	2
11248120	2	01 38 281 14	37	1	11253240	101	90 74 418	900	1
11248166	268	11 24 114 3	6	1	11253394	325	10 58 386 4	1	1
11248175	268	11 24 114 3	7	1	11253398	326	10 55 597 3	1	1
11248432	268	11 24 114 3	10	1	11253401	327	10 58 386 5	1	1
11248433	268	11 24 114 3	11	1	11253440	328	10 58 384 5	1	1
11248460	268	11 24 114 3	12	1	11253456	396	11 89 617 8	7	7
11248964	282	11 24 409 0	21	1	11253687	75	11 24 773 5	2	1
11248966	282	11 24 409 0	22	1	11253689	75	11 24 773 5	26	2
11248969	282	11 24 409 0	9	2	11254299	702	10 56 536 7	1	1
11248990	282	11 24 409 0	19	2	11256217	473	11 24 444 4	19	2
11248991	282	11 24 409 0	15	2	11257849	304	11 24 483 7	72	1
11248992	282	11 24 409 0	20	2	11257851	304	11 24 483 7	75	3
11249191	67	59 21 041 14	27	1	11258086	28	11 24 519 0	41	1
11249222	71	11 26 560 6	12	1	11259031	390	11 25 981 5	2	1
11249223	300	11 24 922 2	13	1	11259704	378	59 22 930 14	200	1
11249224	300	11 24 922 2	18	1	11259705	378	59 22 930 14	210	1
11249225	300	11 24 922 2	21	1	11259815	389	11 23 547 8	2	1
11249334	169	11 24 113 9	2	1	11260077	362	11 26 095 7	24	1
11249678	300	11 24 922 2	24	1	11260806	577	99 48 521 14	44	2
11249729	270	11 24 114 4	4	1	11260956	350	11 29 327 3	17	1
11249738	270	11 24 114 4	11	2	11260957	351	11 27 973 6	20	1

Item	Sheet	Assembly	Pos.	Quantity	Item	Sheet	Assembly	Pos.	Quantity
11261002	169	11 24 113 9	5	2	11267453	91	11 26 744 7	3	1
11261289	468	11 29 259 6	1	2	11267455	92	11 21 935 0	10	1
11261378	29	11 24 519 0	121	3	11267554	257	10 57 423 7	9	1
11261603	352	11 27 973 6	202	1	11267555	257	10 57 423 7	10	1
11262039	705	11 26 771 6	10	1	11267556	257	10 57 423 7	11	1
11262110	671	11 89 568 8	13	4	11267557	257	10 57 423 7	12	1
11262605	2	01 38 281 14	41	1	11267558	257	10 57 423 7	13	1
11262606	423	11 26 260 5	2	1	11267559	257	10 57 423 7	26	1
11262609	423	11 26 260 5	4	1	11267560	257	10 57 423 7	29	1
11262610	2	01 38 281 14	45	1	11267716	704	11 28 423 6	11	1
11262611	438	11 26 261 0	2	1	11268711	78	11 24 682 0	610	1
11262612	438	11 26 261 0	4	1	11268816	78	11 24 682 0	380	2
11262806	53	11 26 557 2	10	1	11269259	254	11 24 114 0	19	1
11262812	383	11 26 095 6	2	1	11269498	276	11 24 114 5	126	1
11262861	280	11 24 114 6	12	1	11269727	509	11 24 132 4	110	1
11262893	383	11 26 095 6	1	1	11269727	564	11 24 263 6	110	1
11262894	383	11 26 095 6	3	1	11269800	254	11 24 114 0	9	1
11263413	164	11 24 113 8	16	1	11269906	633	10 51 176 9	110	1
11263492	512	11 28 629 9	6	1	11269954	6	11 24 047 9	4	1
11263501	164	11 24 113 8	17	1	11270026	254	11 24 114 0	44	1
11263757	164	11 24 113 8	18	1	11270062	604	11 29 444 5	15	1
11265089	304	11 24 483 7	65	1	11270155	467	59 20 224 14	3	1
11265111	456	91 92 528 14	11	1	11270955	604	11 29 444 5	17	1
11265572	52	11 27 315 5	11	1	11271007	604	11 29 444 5	6	1
11265606	2	01 38 281 14	6	1	11271008	604	11 29 444 5	8	1
11265945	302	11 24 483 7	35	1	11271011	604	11 29 444 5	9	1
11266526	601	11 29 551 4	3	1	11271411	604	11 29 444 5	23	1
11266528	602	11 26 652 6	11	1	11271451	554	11 28 979 0	10	2
11266734	51	10 51 963 1	12	76	11271456	593	79 04 871 14	2	2
11266901	482	11 24 570 3	110	1	11271461	593	79 04 871 14	4	1
11266901	498	11 24 570 9	110	1	11271479	593	79 04 871 14	6	1
11266901	504	11 24 571 5	110	1	11271482	593	79 04 871 14	12	2
11266901	552	11 24 084 8	110	1	11271486	593	79 04 871 14	16	4
11266901	559	11 24 162 5	110	1	11271487	593	79 04 871 14	18	8
11266901	562	11 24 163 0	110	1	11271488	593	79 04 871 14	22	1
11266945	451	11 23 820 3	110	1	11271489	595	11 27 148 8	1	1
11266945	523	11 24 618 2	110	1	11271490	595	11 27 148 8	2	1
11266978	387	10 51 969 6	14	80	11271491	587	10 50 435 2	1	1
11267377	82	11 21 992 7	6	1	11271905	604	11 29 444 5	46	1
11267377	83	11 21 992 9	6	1	11271972	554	11 28 979 0	12	2
11267378	82	11 21 992 7	1	1	11271973	554	11 28 979 0	11	1
11267396	83	11 21 992 9	1	1	11272006	604	11 29 444 5	7	1
11267400	86	11 21 993 0	10	2	11272566	604	11 29 444 5	11	1
11267401	86	11 21 993 0	11	2	11272895	604	11 29 444 5	16	2
11267402	86	11 21 993 0	20	1	11273155	6	11 24 047 9	23	1
11267403	86	11 21 993 0	28	1	11273242	282	11 24 409 0	17	4
11267405	86	11 21 993 0	46	1	11273458	352	11 27 973 6	212	2
11267415	87	10 59 347 4	1	1	11274624	586	79 04 112 14	2	2
11267416	87	10 59 347 4	6	1	11274636	586	79 04 112 14	16	4
11267417	87	10 59 347 4	7	1	11274638	586	79 04 112 14	21	1
11267418	87	10 59 347 4	9	1	11274675	589	11 27 463 8	2	1
11267418	88	11 21 936 9	8	1	11274707	275	11 24 114 5	17	1
11267421	88	11 21 936 9	1	1	11274708	275	11 24 114 5	18	1
11267439	89	11 06 730 4	1	1	11275365	462	11 29 259 8	10	1
11267440	89	11 06 730 4	2	1	11275578	470	11 27 536 5	21	2
11267441	89	11 06 730 4	4	2	11275747	450	11 23 820 3	41	1
11267442	89	11 06 730 4	5	1	11276612	261	11 24 114 1	5	1
11267447	90	11 06 730 5	1	1	11276851	2	01 38 281 14	53	1
11267448	90	11 06 730 5	2	1	11278507	516	11 28 357 6	1	1
11267451	91	11 26 744 7	1	1	11278605	614	54 02 702 14	10	1

Item	Sheet	Assembly	Pos.	Quantity	Item	Sheet	Assembly	Pos.	Quantity
11279012	371	10 22 441 3	1	1	11287255	552	11 24 084 8	12	1
11279013	275	11 24 114 5	43	1	11287255	559	11 24 162 5	12	2
11279036	275	11 24 114 5	44	1	11287255	562	11 24 163 0	12	4
11279237	275	11 24 114 5	48	1	11287264	482	11 24 570 3	11	4
11279736	350	11 29 327 3	3	1	11287264	498	11 24 570 9	11	4
11280481	704	11 28 423 6	10	1	11287264	504	11 24 571 5	11	4
11280482	52	11 27 315 5	10	2	11287347	254	11 24 114 0	11	1
11280868	48	10 56 073 3	12	1	11287692	254	11 24 114 0	18	1
11281448	373	59 22 871 14	1	1	11287715	254	11 24 114 0	24	1
11282707	604	11 29 444 5	18	1	11287746	564	11 24 263 6	11	1
11282715	78	11 24 682 0	990	8.3	11287761	259	11 28 734 7	16	1
11282770	604	11 29 444 5	45	1	11287796	254	11 24 114 0	25	1
11282810	582	99 38 329 14	45	8	11287946	481	11 24 570 5	11	1
11283576	514	99 06 461 14	2	1	11287946	497	11 24 571 1	11	1
11283908	482	11 24 570 3	14	1	11287946	503	11 24 571 7	11	1
11283913	485	11 28 390 8	18	8	11288257	710	10 52 155 4	103	1
11283913	499	11 28 583 8	18	9	11288523	525	11 24 336 5	13	4
11283913	505	11 28 626 1	18	9	11288523	552	11 24 084 8	11	4
11283913	509	11 24 132 4	17	12	11288523	559	11 24 162 5	11	4
11283913	525	11 24 336 5	52	8	11288523	562	11 24 163 0	11	4
11283977	482	11 24 570 3	15	1	11289787	552	11 24 084 8	14	1
11283977	498	11 24 570 9	15	1	11289788	560	11 28 979 2	12	1
11283977	504	11 24 571 5	15	1	11289789	560	11 28 979 2	13	2
11283978	482	11 24 570 3	16	1	11289790	553	11 28 978 7	10	1
11283978	498	11 24 570 9	16	1	11289790	560	11 28 979 2	10	1
11283978	504	11 24 571 5	16	1	11289792	559	11 24 162 5	14	1
11283995	482	11 24 570 3	17	1	11289792	562	11 24 163 0	14	1
11283995	498	11 24 570 9	17	1	11289827	551	11 24 084 9	11	1
11283995	504	11 24 571 5	17	1	11289827	558	11 24 162 7	11	1
11283997	482	11 24 570 3	18	1	11289827	561	11 24 163 1	11	1
11283997	498	11 24 570 9	18	1	11289833	669	59 21 826 14	25	1
11283997	504	11 24 571 5	18	1	11290844	78	11 24 682 0	10	1
11284236	4	01 38 281 14	821	1	11290845	78	11 24 682 0	80	1
11285055	491	11 28 794 6	11	1	11290846	78	11 24 682 0	165	2
11285382	486	11 28 391 3	11	1	11290847	78	11 24 682 0	170	1
11285382	525	11 24 336 5	15	2	11290850	78	11 24 682 0	200	2
11285382	555	11 28 667 9	11	1	11290852	78	11 24 682 0	230	1
11285441	556	11 28 544 3	10	1	11290853	78	11 24 682 0	460	1
11285443	553	11 28 978 7	14	5	11290854	78	11 24 682 0	465	1
11285443	560	11 28 979 2	14	6	11290855	78	11 24 682 0	470	2
11285709	262	11 28 574 7	4	1	11290856	78	11 24 682 0	530	1
11285747	261	11 24 114 1	3	1	11290857	78	11 24 682 0	540	1
11285838	498	11 24 570 9	14	1	11291030	266	11 24 679 0	3	1
11285947	2	01 38 281 14	65	1	11291031	266	11 24 679 0	1	1
11286105	509	11 24 132 4	12	1	11292596	462	11 29 259 8	3	1
11286191	2	01 38 281 14	69	1	11292598	2	01 38 281 14	60	1
11286261	504	11 24 571 5	14	1	11292956	400	10 44 510 2	17	1
11286299	509	11 24 132 4	11	1	11293193	400	10 44 510 2	6	1
11286324	455	10 53 044 6	10	1	11293195	400	10 44 510 2	7	1
11286324	510	10 53 141 3	10	1	11293196	400	10 44 510 2	8	1
11286324	526	10 53 140 9	10	1	11293250	21	59 21 458 14	3	2
11286324	565	10 53 141 0	10	1	11293273	2	01 38 281 14	30	1
11286476	8	11 29 618 6	1	1	11294267	531	11 24 475 9	11	1
11286481	8	11 29 618 6	2	2	11294362	78	11 24 682 0	100	1
11286534	2	01 38 281 14	77	4	11294363	78	11 24 682 0	110	4
11286679	553	11 28 978 7	11	7	11294364	78	11 24 682 0	180	1
11286679	560	11 28 979 2	11	6	11294445	601	11 29 551 4	10	1
11287255	482	11 24 570 3	12	1	11294517	525	11 24 336 5	41	5
11287255	498	11 24 570 9	12	2	11294517	564	11 24 263 6	16	1
11287255	504	11 24 571 5	12	4	11294573	564	11 24 263 6	17	2

Item	Sheet	Assembly	Pos.	Quantity	Item	Sheet	Assembly	Pos.	Quantity
11294626	564	11 24 263 6	18	1	11481158	586	79 04 112 14	5	1
11294884	531	11 24 475 9	14	2	11481159	586	79 04 112 14	6	1
11295194	604	11 29 444 5	100	2	11481162	589	11 27 463 8	1	1
11295514	3	01 38 281 14	514	1	11482007	275	11 24 114 5	25	4
11296186	6	11 24 047 9	2	1	11482412	226	10 14 286 0	7	1
11296485	525	11 24 336 5	12	2	11490216	126	10 14 360 7	34	2
11296492	525	11 24 336 5	14	2	11490265	86	11 21 993 0	38	1
11297460	677	11 23 623 3	2	1	11490265	86	11 21 993 0	39	1
11297461	677	11 23 623 3	3	1	11490265	86	11 21 993 0	40	1
11297647	704	11 28 423 6	12	1	11490268	593	79 04 871 14	9	4
11299163	268	11 24 114 3	13	1	11490323	146	10 32 489 2	1	1
11299384	538	11 24 611 6	11	1	11493575	586	79 04 112 14	4	1
11299752	410	10 55 716 2	1	1	11493578	586	79 04 112 14	14	2
11300790	669	59 21 826 14	160	1	11600281	89	11 06 730 4	3	1
11301479	58	10 58 163 4	42	1	11600879	208	10 15 315 1	4	1
11301682	18	10 52 459 5	2	10	11600879	209	10 14 114 0	3	1
11305568	339	99 04 645 14	75	16	11600879	213	10 13 543 4	3	1
11305579	339	99 04 645 14	76	16	11621284	276	11 24 114 5	120	1
11306379	677	11 23 623 3	6	1	11621764	275	11 24 114 5	65	9
11308593	268	11 24 114 3	14	1	11621769	254	11 24 114 0	49	1
11308594	268	11 24 114 3	15	1	11621769	254	11 24 114 0	50	1
11309625	350	11 29 327 3	57	1	11621769	270	11 24 114 4	5	0.5
11309628	386	11 30 962 5	2	1	11621769	275	11 24 114 5	61	6.5
11310079	710	10 52 155 4	108	1	11621772	254	11 24 114 0	51	1
11310567	466	10 09 917 3	4	1	11621772	275	11 24 114 5	62	2
11310932	6	11 24 047 9	46	1	11621772	604	11 29 444 5	24	5
11310952	485	11 28 390 8	12	2	11621777	254	11 24 114 0	48	1
11310952	499	11 28 583 8	12	2	11621783	39	99 14 627 14	2	21.55
11310952	505	11 28 626 1	12	2	11622278	208	10 15 315 1	3	1
11310955	485	11 28 390 8	13	2	11622278	213	10 13 543 4	2	1
11310955	499	11 28 583 8	13	2	11645490	351	11 27 973 6	76	1
11310955	505	11 28 626 1	13	2	11656331	254	11 24 114 0	47	1
11311241	485	11 28 390 8	10	1	11657232	604	11 29 444 5	36	1
11311241	499	11 28 583 8	10	1	11690424	237	10 14 511 2	10	2
11311241	505	11 28 626 1	10	1	11694640	210	10 13 508 0	9	1
11311245	485	11 28 390 8	15	2	11696074	273	10 30 300 7	16	1
11311245	499	11 28 583 8	15	1	11890145	410	10 55 716 2	2	2
11311245	505	11 28 626 1	14	1	11890636	650	11 23 619 7	16	1
11311262	485	11 28 390 8	11	1	11892033	2	01 38 281 14	55	1
11311336	499	11 28 583 8	11	1	11893213	425	10 53 039 8	1	1
11311371	499	11 28 583 8	20	1	11893214	425	10 53 039 8	4	1
11311371	505	11 28 626 1	15	1	11893215	425	10 53 039 8	5	1
11311390	505	11 28 626 1	20	1	11893216	425	10 53 039 8	6	1
11311393	505	11 28 626 1	11	1	11893228	426	11 89 321 3	1	1
11312502	587	10 50 435 2	4	1	11893250	427	11 89 322 8	2	1
11313817	538	11 24 611 6	3	1	11893252	427	11 89 322 8	4	1
11314341	477	11 23 749 8	12	3	11893253	430	11 89 321 4	1	1
11314341	494	11 23 290 7	13	3	11893254	431	11 89 321 5	1	1
11314341	495	11 23 292 2	17	4	11893255	432	11 89 321 6	1	1
11314341	579	11 25 204 2	15	4	11893352	682	11 89 400 8	3	1
11314349	477	11 23 749 8	11	3	11894008	4	01 38 281 14	704	1
11314349	494	11 23 290 7	14	3	11894080	660	11 89 568 5	2	1
11314349	495	11 23 292 2	14	4	11894083	661	11 89 408 0	2	1
11314349	579	11 25 204 2	14	4	11894306	553	11 28 978 7	13	2
11314473	474	10 53 120 7	50	1	11894307	553	11 28 978 7	12	1
11348054	189	11 34 807 2	1	1	11895685	659	11 24 298 8	10	1
11348072	171	10 14 032 7	60	6	11895686	660	11 89 568 5	10	1
11349182	275	11 24 114 5	8	2	11895687	659	11 24 298 8	11	1
11374417	275	11 24 114 5	4	1	11895688	666	11 89 568 7	10	1
11461533	28	11 24 519 0	42	1	11896178	395	10 55 097 0	900	1

Item	Sheet	Assembly	Pos.	Quantity	Item	Sheet	Assembly	Pos.	Quantity
11897433	548	59 21 280 14	5	1	247027402	453	10 51 826 1	606	1
226016702	300	11 24 922 2	29	2.18	247040302	14	11 29 618 6	680	1
226016702	300	11 24 922 2	30	1.11	247040302	312	10 51 969 8	605	1
226016702	300	11 24 922 2	31	1.19	247040902	16	11 29 618 6	739	2
226016702	300	11 24 922 2	33	1.24	247040902	275	11 24 114 5	34	2
226016702	300	11 24 922 2	34	1.29	247041102	12	11 29 618 6	203	1
226016702	300	11 24 922 2	35	0.57	247041102	76	11 24 773 5	608	3
226016702	300	11 24 922 2	36	0.85	247041102	392	11 25 903 1	608	4
226016702	300	11 24 922 2	37	1.2	247041402	76	11 24 773 5	607	3
226016702	300	11 24 922 2	39	0.36	247041502	16	11 29 618 6	749	2
226016702	300	11 24 922 2	40	0.35	247041502	275	11 24 114 5	30	2
226016702	456	91 92 528 14	22	0.45	247042402	14	11 29 618 6	681	4
226017802	451	11 23 820 3	76	4	247042402	394	11 25 903 1	611	6
226017802	482	11 24 570 3	13	1.132	247042402	652	10 51 973 8	605	1
226017802	498	11 24 570 9	13	1.132	247042402	689	10 51 728 1	607	1
226017802	504	11 24 571 5	13	1.132	247042502	16	11 29 618 6	746	2
247000802	39	99 14 627 14	30	4	247042702	12	11 29 618 6	607	1
247000902	275	11 24 114 5	11	4	247042702	453	10 51 826 1	605	1
247000902	604	11 29 444 5	37	2	247042702	547	10 53 146 1	614	1
247001802	652	10 51 973 8	613	2	247043002	547	10 53 146 1	610	1
247009202	14	11 29 618 6	649	6	247043102	12	11 29 618 6	606	2
247009202	76	11 24 773 5	606	2	247043102	76	11 24 773 5	614	2
247009202	394	11 25 903 1	644	1	247043102	270	11 24 114 4	23	2
247009202	453	10 51 826 1	611	2	247043102	604	11 29 444 5	33	1
247009402	16	11 29 618 6	724	10	247043202	66	10 51 969 5	615	2
247009402	66	10 51 969 5	609	1	247043502	76	11 24 773 5	613	2
247009402	76	11 24 773 5	605	4	247043702	547	10 53 146 1	609	1
247009402	312	10 51 969 8	606	1	247044302	76	11 24 773 5	652	2
247009402	321	10 51 968 7	610	1	247048502	275	11 24 114 5	27	3
247009402	344	10 55 216 1	605	2	247048702	547	10 53 146 1	603	1
247009702	12	11 29 618 6	612	13	247048702	604	11 29 444 5	38	1
247009702	66	10 51 969 5	608	1	247048802	12	11 29 618 6	625	6
247009702	76	11 24 773 5	602	10	247048802	453	10 51 826 1	613	2
247009702	270	11 24 114 4	21	1	247049002	12	11 29 618 6	618	1
247009702	344	10 55 216 1	604	1	247049002	275	11 24 114 5	33	2
247009702	392	11 25 903 1	603	4	247049002	392	11 25 903 1	22	1
247009702	435	11 26 260 6	711	1	247049002	604	11 29 444 5	44	2
247009702	441	11 26 261 1	711	1	247049102	12	11 29 618 6	627	2
247009702	453	10 51 826 1	610	3	247049102	39	99 14 627 14	33	4
247009702	604	11 29 444 5	42	1	247049102	76	11 24 773 5	617	1
247009702	608	10 51 726 2	604	1	247049102	453	10 51 826 1	204	2
247009702	662	11 89 408 3	701	1	247049202	14	11 29 618 6	631	1
247009902	14	11 29 618 6	675	5	247091002	75	11 24 773 5	302	1
247009902	76	11 24 773 5	610	7	247105602	16	11 29 618 6	732	1
247009902	392	11 25 903 1	601	6	247108302	16	11 29 618 6	734	4
247010102	12	11 29 618 6	611	4	247108302	76	11 24 773 5	612	8
247010102	76	11 24 773 5	604	4	247108302	270	11 24 114 4	24	4
247010102	453	10 51 826 1	609	2	247108302	394	11 25 903 1	641	1
247011602	12	11 29 618 6	610	1	247112702	12	11 29 618 6	624	9
247011602	76	11 24 773 5	307	1	247112702	66	10 51 969 5	202	2
247011602	270	11 24 114 4	22	1	247112702	76	11 24 773 5	686	4
247011602	394	11 25 903 1	613	2	247112702	344	10 55 216 1	603	2
247011602	453	10 51 826 1	603	1	247112702	453	10 51 826 1	201	2
247020902	14	11 29 618 6	654	3	247112702	645	10 51 971 2	706	2
247021802	275	11 24 114 5	24	3	247116402	12	11 29 618 6	605	3
247027002	14	11 29 618 6	716	1	247116402	453	10 51 826 1	607	6
247027202	12	11 29 618 6	609	1	247117302	16	11 29 618 6	752	15
247027302	14	11 29 618 6	718	2	247117302	66	10 51 969 5	616	1
247027302	275	11 24 114 5	32	2	247117302	76	11 24 773 5	628	1
247027302	392	11 25 903 1	602	4	247117302	344	10 55 216 1	600	4

Item	Sheet	Assembly	Pos.	Quantity	Item	Sheet	Assembly	Pos.	Quantity
247117302	645	10 51 971 2	707	2	289008514	541	11 29 938 4	21	1
247117302	652	10 51 973 8	203	1	289012914	530	11 29 451 7	10	1
247117302	662	11 89 408 3	705	2	289016714	573	11 29 462 6	10	1
247117702	14	11 29 618 6	704	9	289022714	582	99 38 329 14	37	2
247117702	76	11 24 773 5	308	1	289031614	435	11 26 260 6	13	1
247117702	254	11 24 114 0	35	1	289031614	441	11 26 261 1	13	1
247117702	275	11 24 114 5	10	1	289035314	479	99 29 588 14	10	1
247117702	344	10 55 216 1	204	4	289040314	537	99 35 031 14	17	4
247117702	394	11 25 903 1	632	1	289052014	557	11 28 982 7	12	1
247121102	16	11 29 618 6	727	1	289057714	450	11 23 820 3	55	1
247126202	16	11 29 618 6	735	5	289057714	491	11 28 794 6	12	1
247126202	76	11 24 773 5	641	5	289058014	633	10 51 176 9	13	1
247126202	275	11 24 114 5	35	2	289059414	389	11 23 547 8	13	1
247126202	394	11 25 903 1	610	3	289062814	554	11 28 979 0	13	0.1
247128402	12	11 29 618 6	626	8	289064214	320	10 51 968 6	24	4
247128402	76	11 24 773 5	627	6	289073714	529	11 29 649 2	13	5
247128402	344	10 55 216 1	608	4	289073814	529	11 29 649 2	14	3
247128402	645	10 51 971 2	708	2	385031714	606	10 51 743 9	15	2
247128502	16	11 29 618 6	731	2	385037314	512	11 28 629 9	14	2
247128502	312	10 51 969 8	604	1	385072014	58	10 58 163 4	65	2
247128502	392	11 25 903 1	605	4	385094414	359	10 53 171 8	5	1
247128502	608	10 51 726 2	614	1	385123814	329	99 29 258 14	13	2
247128602	14	11 29 618 6	653	4	385137114	686	10 58 064 7	13	1
247128602	76	11 24 773 5	625	1	385151114	329	99 29 258 14	6	1
247128602	275	11 24 114 5	16	1	385204714	290	10 57 883 5	5	2
247128602	321	10 51 968 7	605	1	385204714	292	10 57 897 6	5	2
247128602	344	10 55 216 1	602	1	385204714	294	10 57 940 0	8	2
247128602	394	11 25 903 1	648	2	385204714	295	10 56 623 7	8	2
247138602	16	11 29 618 6	729	3	385204714	296	10 56 580 8	5	2
247138602	76	11 24 773 5	692	1	385255314	665	11 89 568 6	21	4
247138602	275	11 24 114 5	19	2	385255414	665	11 89 568 6	22	4
247138602	392	11 25 903 1	609	4	385255514	665	11 89 568 6	23	4
247142002	76	11 24 773 5	653	2	385260014	570	11 28 774 6	2	2
247232702	14	11 29 618 6	660	2	388283108	522	99 30 800 14	18	1
247242302	12	11 29 618 6	629	11	388283208	522	99 30 800 14	19	1
247242302	394	11 25 903 1	638	2	388291208	408	10 55 876 0	16	72
247242302	604	11 29 444 5	40	1	388291208	417	10 55 876 1	16	72
247261802	14	11 29 618 6	708	3	4000383	422	99 26 718 14	19	4
247261802	76	11 24 773 5	621	1	4000383	550	99 31 679 14	10	4
260493402	578	97 14 959 03	33	1	4000383	635	95 34 317 03	5	2
260493402	583	91 95 871 14	33	1	4000648	254	11 24 114 0	70	9
260493402	634	10 51 167 1	33	1	4000898	78	11 24 682 0	480	9
260514602	359	10 53 171 8	25	7	400093303	412	96 93 178 01	39	3
260514602	629	11 21 530 2	38	1	4001205	334	99 29 388 14	3	7
261100714	614	54 02 702 14	12	2	4001246	10	11 29 618 6	55	16
262103101	480	10 35 063 3	16	0.16	4001246	75	11 24 773 5	52	4
262103101	525	11 24 336 5	62	0.92	4001246	344	10 55 216 1	6	16
262103101	552	11 24 084 8	13	0.93	4001246	465	10 51 959 1	670	4
262103101	559	11 24 162 5	13	0.93	4001246	652	10 51 973 8	616	4
262103101	562	11 24 163 0	13	0.93	4001266	715	10 52 155 9	42	2
262105314	288	11 24 409 1	14	9	4001622	169	11 24 113 9	61	12
262105314	290	10 57 883 5	2	1.1	4001622	206	10 15 360 6	3	4
262107714	290	10 57 883 5	13	4	4001664	174	10 15 438 6	3	10
262107714	292	10 57 897 6	11	4.1	400180214	350	11 29 327 3	35	8
262107714	294	10 57 940 0	13	2.6	400180214	359	10 53 171 8	30	4
262107714	295	10 56 623 7	13	1.35	400180314	350	11 29 327 3	36	15
262107714	296	10 56 580 8	11	2.8	4001967	350	11 29 327 3	24	2
262107814	60	10 56 067 3	24	6	4001967	665	11 89 568 6	28	24
289003214	572	11 29 457 3	10	1	4002195	165	10 51 948 1	61	4
289007114	550	99 31 679 14	7	24	4002195	652	10 51 973 8	301	2

Item	Sheet	Assembly	Pos.	Quantity	Item	Sheet	Assembly	Pos.	Quantity
4002229	132	10 13 803 2	44	1	406501314	276	11 24 114 5	82	4
4002401	383	11 26 095 6	5	4	406501314	304	11 24 483 7	96	10
4002442	412	96 93 178 01	82	12	406501314	422	99 26 718 14	20	4
4002442	652	10 51 973 8	303	2	406501314	450	11 23 820 3	21	10
4002551	332	99 29 389 14	6	4	406501314	526	10 53 140 9	12	3
4002551	333	99 29 392 14	6	4	406501314	530	11 29 451 7	11	2
4002551	604	11 29 444 5	101	4	406501314	536	11 29 488 4	11	2
4002655	304	11 24 483 7	92	10	406501314	570	11 28 774 6	39	3
4002871	350	11 29 327 3	34	24	406501314	572	11 29 457 3	11	2
402600114	284	11 24 409 0	62	1	406501314	573	11 29 462 6	11	2
402600314	582	99 38 329 14	32	2	406501314	577	99 48 521 14	34	4
402600314	637	99 10 116 14	34	2	406501314	604	11 29 444 5	62	7
402600514	309	99 29 803 14	10	6	406501314	606	10 51 743 9	21	6
403900101	615	54 02 703 14	80	1	406501314	637	99 10 116 14	32	2
403900101	665	11 89 568 6	34	4	406501314	691	99 21 973 14	5	4
403900501	129	10 14 131 6	22	1	406501414	164	11 24 113 8	65	8
403900714	44	10 56 070 1	17	4	406501414	261	11 24 114 1	60	4
403900714	48	10 56 073 3	16	1	406501414	262	11 28 574 7	60	2
403900714	167	10 57 532 2	33	2	406501414	264	11 24 114 2	60	4
403900714	254	11 24 114 0	41	1	406501414	282	11 24 409 0	35	11
404101608	614	54 02 702 14	30	2	406501414	304	11 24 483 7	95	2
404203514	465	10 51 959 1	13	4	406501414	311	10 51 969 7	15	2
404206414	350	11 29 327 3	31	8	406501414	350	11 29 327 3	26	19
404206614	206	10 15 360 6	2	1	406501414	419	11 23 548 1	11	6
404206614	698	11 22 037 2	8	4	406501414	450	11 23 820 3	69	11
404208514	78	11 24 682 0	430	58	406501414	485	11 28 390 8	25	1
404208814	614	54 02 702 14	21	8	406501414	499	11 28 583 8	25	1
404214114	61	11 31 093 2	10	4	406501414	505	11 28 626 1	25	1
404250914	245	10 12 797 9	3	1	406501414	525	11 24 336 5	32	5
404250914	251	10 13 307 7	3	1	406501414	606	10 51 743 9	22	4
404250914	615	54 02 703 14	51	3	406501414	621	10 55 372 1	45	40
404251014	254	11 24 114 0	60	3	406501414	686	10 58 064 7	33	2
404251014	451	11 23 820 3	91	4	406501514	56	92 65 477 14	11	2
404251014	525	11 24 336 5	40	4	406501514	58	10 58 163 4	66	6
404251014	526	10 53 140 9	22	4	406501514	254	11 24 114 0	59	6
404251014	570	11 28 774 6	36	4	406501514	341	10 51 968 2	18	6
404251414	254	11 24 114 0	61	6	406501514	350	11 29 327 3	39	5
4043003	320	10 51 968 6	30	8	406501514	386	11 30 962 5	3	2
4043014	652	10 51 973 8	300	2	406501514	665	11 89 568 6	26	4
404302914	312	10 51 969 8	6	4	406501514	687	10 57 848 6	6	1
404302914	321	10 51 968 7	7	4	406501614	513	11 28 610 5	10	4
4043082	236	10 14 013 6	14	2	406501714	276	11 24 114 5	79	5
4043124	75	11 24 773 5	60	4	406501714	350	11 29 327 3	22	14
4043124	412	96 93 178 01	17	12	406501714	385	10 53 756 0	4	8
4043133	75	11 24 773 5	53	4	406501714	686	10 58 064 7	18	3
404313401	10	11 29 618 6	58	4	406501814	60	10 56 067 3	22	2
4043163	95	10 11 834 9	21	8	406501814	450	11 23 820 3	62	8
4043163	137	10 12 987 4	20	2	406501914	633	10 51 176 9	50	4
404333614	75	11 24 773 5	61	12	406508014	450	11 23 820 3	61	3
404403114	350	11 29 327 3	21	1	406508014	525	11 24 336 5	56	4
406144514	309	99 29 803 14	20	6	406508014	621	10 55 372 1	46	2
406154014	408	10 55 876 0	30	45	406509314	254	11 24 114 0	67	6
406154014	417	10 55 876 1	30	45	406509314	261	11 24 114 1	64	2
4062002	10	11 29 618 6	64	16	406509314	280	11 24 114 6	63	2
4062009	168	10 58 017 0	61	4	406509314	298	10 54 591 0	17	12
406501314	53	11 26 557 2	12	2	406509314	304	11 24 483 7	81	23
406501314	58	10 58 163 4	28	2	406509314	451	11 23 820 3	87	16
406501314	164	11 24 113 8	66	2	406509314	487	11 28 397 7	14	2
406501314	254	11 24 114 0	63	8	406509314	488	11 28 397 8	14	2
406501314	261	11 24 114 1	61	6	406509314	489	11 28 399 5	14	4

Item	Sheet	Assembly	Pos.	Quantity	Item	Sheet	Assembly	Pos.	Quantity
406509314	490	11 28 399 7	14	4	406517714	58	10 58 163 4	21	2
406509314	706	10 52 293 0	12	2	406517714	261	11 24 114 1	65	2
406511214	276	11 24 114 5	88	6	406517714	309	99 29 803 14	23	12
406511414	164	11 24 113 8	67	8	406517714	525	11 24 336 5	38	4
406511414	165	10 51 948 1	60	6	406517914	164	11 24 113 8	56	4
406511414	320	10 51 968 6	22	3	406517914	408	10 55 876 0	24	7
406511414	450	11 23 820 3	49	2	406517914	417	10 55 876 1	24	7
406511414	582	99 38 329 14	47	2	406517914	473	11 24 444 4	14	8
406511614	41	10 51 961 6	18	2	406517914	521	99 23 398 14	28	8
406511614	164	11 24 113 8	53	2	406517914	633	10 51 176 9	24	8
406511614	254	11 24 114 0	66	8	406518414	276	11 24 114 5	89	1
406511614	268	11 24 114 3	60	14	406518414	450	11 23 820 3	18	4
406511614	280	11 24 114 6	60	4	406518414	574	10 55 753 7	11	2
406511614	282	11 24 409 0	31	28	406518414	575	10 55 757 6	11	2
406511614	304	11 24 483 7	80	46	406518514	268	11 24 114 3	63	3
406511614	308	10 52 656 0	13	16	406518514	276	11 24 114 5	80	10
406511614	451	11 23 820 3	94	2	406518614	282	11 24 409 0	24	5
406511614	491	11 28 794 6	16	2	406518614	298	10 54 591 0	21	2
406511614	554	11 28 979 0	14	4	406518614	637	99 10 116 14	47	8
406511614	557	11 28 982 7	16	2	406518714	41	10 51 961 6	17	8
406511914	44	10 56 070 1	60	12	406518714	58	10 58 163 4	56	4
406511914	167	10 57 532 2	60	6	406518714	60	10 56 067 3	16	4
406511914	169	11 24 113 9	60	1	406518714	264	11 24 114 2	61	2
406511914	254	11 24 114 0	65	16	406518714	280	11 24 114 6	62	10
406511914	261	11 24 114 1	63	8	406518714	350	11 29 327 3	25	12
406511914	276	11 24 114 5	87	2	406518714	450	11 23 820 3	17	2
406511914	280	11 24 114 6	61	40	406518714	475	99 14 137 14	3	3
406511914	282	11 24 409 0	23	35	406518714	577	99 48 521 14	16	8
406511914	304	11 24 483 7	79	24	406518714	680	11 22 344 2	20	1
406511914	450	11 23 820 3	30	2	406518814	164	11 24 113 8	54	4
406511914	533	11 29 426 7	44	4	406518814	276	11 24 114 5	81	4
406511914	606	10 51 743 9	19	12	406518814	304	11 24 483 7	94	8
406511914	635	95 34 317 03	4	2	406518814	470	11 27 536 5	23	4
406511914	705	11 26 771 6	11	3	406518814	686	10 58 064 7	20	6
406512014	41	10 51 961 6	19	2	406518814	706	10 52 293 0	14	3
406512014	284	11 24 409 0	54	31	406519214	268	11 24 114 3	62	4
406512014	298	10 54 591 0	19	8	406527314	164	11 24 113 8	64	2
406512014	304	11 24 483 7	83	1	406527314	512	11 28 629 9	29	8
406512114	479	99 29 588 14	14	2	406527314	513	11 28 610 5	11	4
406512614	261	11 24 114 1	66	1	406527414	41	10 51 961 6	16	8
406512614	582	99 38 329 14	22	4	406527414	62	10 56 069 4	3	8
406517314	44	10 56 070 1	62	12	406527414	164	11 24 113 8	57	16
406517314	304	11 24 483 7	73	3	406527614	58	10 58 163 4	35	4
406517314	329	99 29 258 14	2	8	406527814	284	11 24 409 0	45	4
406517314	388	99 18 041 14	15	2	406527814	304	11 24 483 7	82	8
406517314	408	10 55 876 0	18	152	406527814	475	99 14 137 14	4	3
406517314	417	10 55 876 1	18	152	406527914	50	10 55 268 1	3	1
406517314	419	11 23 548 1	22	16	406527914	254	11 24 114 0	68	4
406517314	424	11 22 050 0	16	4	406527914	480	10 35 063 3	14	2
406517314	439	11 22 050 1	16	4	406527914	621	10 55 372 1	38	16
406517314	450	11 23 820 3	16	4	406528014	385	10 53 756 0	5	2
406517314	525	11 24 336 5	30	4	406532614	304	11 24 483 7	68	1
406517314	526	10 53 140 9	32	4	406532614	424	11 22 050 0	13	3
406517314	570	11 28 774 6	41	12	406532614	439	11 22 050 1	13	3
406517314	577	99 48 521 14	15	2	406532614	450	11 23 820 3	60	24
406517314	633	10 51 176 9	29	6	406532614	459	10 58 193 7	13	18
406517614	261	11 24 114 1	62	4	406532614	473	11 24 444 4	30	8
406517614	304	11 24 483 7	97	2	406532614	525	11 24 336 5	68	4
406517614	495	11 23 292 2	13	2	406532614	606	10 51 743 9	24	2
406517614	710	10 52 155 4	13	2	406532614	680	11 22 344 2	17	3

Item	Sheet	Assembly	Pos.	Quantity	Item	Sheet	Assembly	Pos.	Quantity
406532614	686	10 58 064 7	21	3	411515014	574	10 55 753 7	20	2
406532614	706	10 52 293 0	4	4	411515014	575	10 55 757 6	20	2
406532914	304	11 24 483 7	98	1	411515014	621	10 55 372 1	61	2
406532914	459	10 58 193 7	18	2	411515014	624	11 24 575 5	15	4
406532914	512	11 28 629 9	27	4	411515014	710	10 52 155 4	15	2
406550714	300	11 24 922 2	27	84	411516914	164	11 24 113 8	85	8
406551114	304	11 24 483 7	69	2	411516914	408	10 55 876 0	43	8
406606414	10	11 29 618 6	56	16	411516914	417	10 55 876 1	44	8
4066093	168	10 58 017 0	64	8	411516914	419	11 23 548 1	25	8
4066098	10	11 29 618 6	67	48	411516914	537	99 35 031 14	15	2
4066098	75	11 24 773 5	59	12	411516914	574	10 55 753 7	15	2
4066098	168	10 58 017 0	63	12	411516914	575	10 55 757 6	15	2
4066122	10	11 29 618 6	65	8	411516914	577	99 48 521 14	43	2
4066122	168	10 58 017 0	65	6	411517114	350	11 29 327 3	56	1
4066124	75	11 24 773 5	56	12	411517114	385	10 53 756 0	6	4
4068017	48	10 56 073 3	60	6	411517114	419	11 23 548 1	32	8
407041214	384	97 07 857 03	3	3	411517114	599	11 22 322 6	4	4
407071114	386	11 30 962 5	4	4	411517114	604	11 29 444 5	80	1
407201308	570	11 28 774 6	37	4	411517114	621	10 55 372 1	47	10
407203008	167	10 57 532 2	65	4	411551114	276	11 24 114 5	100	2
4072083	44	10 56 070 1	61	32	411551114	665	11 89 568 6	31	9
407350108	238	10 14 622 4	15	2	411551214	384	97 07 857 03	2	9
407350208	195	10 13 475 1	4	1	411551214	715	10 52 155 9	43	2
407350208	196	10 12 653 5	6	1	411805514	533	11 29 426 7	57	2
407350208	198	10 13 469 6	5	1	411880614	268	11 24 114 3	83	4
407350208	217	10 14 588 5	22	1	411901114	31	10 53 048 9	8	1
407350208	238	10 14 622 4	16	8	411901114	165	10 51 948 1	80	4
4079160	217	10 14 588 5	5	7	412705014	387	10 51 969 6	12	80
4079160	238	10 14 622 4	8	1	413003208	698	11 22 037 2	9	2
4079240	217	10 14 588 5	17	1	413003308	280	11 24 114 6	80	32
408301208	365	11 22 369 1	7	8	413003308	300	11 24 922 2	38	18
408600708	304	11 24 483 7	99	2	413003508	280	11 24 114 6	82	10
408600708	365	11 22 369 1	6	8	413003508	284	11 24 409 0	58	4
408600708	698	11 22 037 2	6	1	413013314	280	11 24 114 6	81	8
408600808	304	11 24 483 7	91	2	413013314	298	10 54 591 0	13	24
408601008	459	10 58 193 7	16	4	420000314	384	97 07 857 03	4	3
408601008	624	11 24 575 5	13	8	420000414	34	10 56 645 8	60	4
408601014	284	11 24 409 0	42	6	420000414	276	11 24 114 5	91	33
408602614	533	11 29 426 7	42	2	420000414	284	11 24 409 0	44	10
408606214	350	11 29 327 3	37	4	420000414	350	11 29 327 3	23	18
408606214	687	10 57 848 6	5	2	420000414	385	10 53 756 0	7	8
408606314	619	10 55 372 1	33	24	420000414	408	10 55 876 0	50	6
408606414	304	11 24 483 7	90	14	420000414	417	10 55 876 1	50	6
409710601	412	96 93 178 01	67	3	420000414	419	11 23 548 1	30	24
409878214	167	10 57 532 2	62	12	420000414	424	11 22 050 0	12	3
409878414	167	10 57 532 2	64	4	420000414	439	11 22 050 1	12	3
411514614	48	10 56 073 3	80	6	420000414	450	11 23 820 3	64	56
411514614	164	11 24 113 8	82	8	420000414	459	10 58 193 7	12	36
411514614	268	11 24 114 3	81	8	420000414	473	11 24 444 4	29	18
411514614	276	11 24 114 5	104	6	420000414	487	11 28 397 7	17	1
411514614	298	10 54 591 0	20	4	420000414	488	11 28 397 8	17	1
411514614	350	11 29 327 3	32	1	420000414	489	11 28 399 5	17	1
411514614	556	11 28 544 3	12	2	420000414	490	11 28 399 7	17	1
411514614	574	10 55 753 7	19	1	420000414	525	11 24 336 5	69	12
411514614	575	10 55 757 6	19	1	420000414	526	10 53 140 9	24	4
411514614	706	10 52 293 0	5	2	420000414	550	99 31 679 14	12	8
411515014	164	11 24 113 8	83	4	420000414	570	11 28 774 6	46	4
411515014	284	11 24 409 0	57	7	420000414	599	11 22 322 6	3	10
411515014	298	10 54 591 0	15	26	420000414	604	11 29 444 5	71	2
411515014	350	11 29 327 3	38	4	420000414	606	10 51 743 9	26	2

Item	Sheet	Assembly	Pos.	Quantity	Item	Sheet	Assembly	Pos.	Quantity
420000414	621	10 55 372 1	34	34	420001114	515	10 59 863 3	22	1
420000414	680	11 22 344 2	18	6	420001114	516	11 28 357 6	4	8
420001014	53	11 26 557 2	14	4	420001114	522	99 30 800 14	10	2
420001014	58	10 58 163 4	67	6	420001114	557	11 28 982 7	15	4
420001014	164	11 24 113 8	75	16	420001114	570	11 28 774 6	49	4
420001014	255	11 24 114 0	71	6	420001114	577	99 48 521 14	17	8
420001014	264	11 24 114 2	70	4	420001114	621	10 55 372 1	37	32
420001014	270	11 24 114 4	70	4	420001114	637	99 10 116 14	16	6
420001014	276	11 24 114 5	92	26	420001114	705	11 26 771 6	12	6
420001014	282	11 24 409 0	34	21	420001514	31	10 53 048 9	10	1
420001014	298	10 54 591 0	16	12	420001514	44	10 56 070 1	71	12
420001014	304	11 24 483 7	87	26	420001514	58	10 58 163 4	20	2
420001014	311	10 51 969 7	14	2	420001514	60	10 56 067 3	11	2
420001014	341	10 51 968 2	17	6	420001514	164	11 24 113 8	76	4
420001014	350	11 29 327 3	20	28	420001514	168	10 58 017 0	70	20
420001014	386	11 30 962 5	5	2	420001514	261	11 24 114 1	72	3
420001014	419	11 23 548 1	12	6	420001514	385	10 53 756 0	8	2
420001014	450	11 23 820 3	44	18	420001514	408	10 55 876 0	23	15
420001014	461	99 34 198 14	14	8	420001514	417	10 55 876 1	23	15
420001014	470	11 27 536 5	22	4	420001514	419	11 23 548 1	23	24
420001014	495	11 23 292 2	15	4	420001514	450	11 23 820 3	22	16
420001014	522	99 30 800 14	13	4	420001514	525	11 24 336 5	25	12
420001014	525	11 24 336 5	61	4	420001514	526	10 53 140 9	34	8
420001014	541	11 29 938 4	38	2	420001514	541	11 29 938 4	47	8
420001014	570	11 28 774 6	48	6	420001514	577	99 48 521 14	18	2
420001014	577	99 48 521 14	35	14	420001514	621	10 55 372 1	49	10
420001014	604	11 29 444 5	72	10	420001514	686	10 58 064 7	25	2
420001014	621	10 55 372 1	48	82	420002601	637	99 10 116 14	29	4
420001014	623	11 24 147 8	13	12	420003714	473	11 24 444 4	36	4
420001014	665	11 89 568 6	19	4	420003714	491	11 28 794 6	13	2
420001014	686	10 58 064 7	28	6	420003714	521	99 23 398 14	27	10
420001014	687	10 57 848 6	7	1	420003714	557	11 28 982 7	13	2
420001014	698	11 22 037 2	7	4	420004001	570	11 28 774 6	53	2
420001014	706	10 52 293 0	15	3	420004001	582	99 38 329 14	15	2
420001014	710	10 52 155 4	14	2	420004001	631	91 92 763 14	15	2
420001114	41	10 51 961 6	15	8	420004501	542	10 59 968 1	18	8
420001114	44	10 56 070 1	70	44	420005214	53	11 26 557 2	13	2
420001114	48	10 56 073 3	70	6	420005214	61	11 31 093 2	11	8
420001114	60	10 56 067 3	18	4	420005214	62	10 56 069 4	5	40
420001114	62	10 56 069 4	4	8	420005214	276	11 24 114 5	90	2
420001114	164	11 24 113 8	70	42	420005214	450	11 23 820 3	63	16
420001114	165	10 51 948 1	70	4	420005214	512	11 28 629 9	33	8
420001114	167	10 57 532 2	70	6	420005214	513	11 28 610 5	14	16
420001114	255	11 24 114 0	73	28	420005214	665	11 89 568 6	32	9
420001114	268	11 24 114 3	70	2	420051514	582	99 38 329 14	24	4
420001114	276	11 24 114 5	97	4	420053101	621	10 55 372 1	50	20
420001114	280	11 24 114 6	71	11	420250114	706	10 52 293 0	6	4
420001114	284	11 24 409 0	55	40	420600408	60	10 56 067 3	13	6
420001114	298	10 54 591 0	12	36	421101714	516	11 28 357 6	5	2
420001114	304	11 24 483 7	78	53	421101714	637	99 10 116 14	36	2
420001114	308	10 52 656 0	14	16	421101714	642	99 06 789 14	4	1
420001114	350	11 29 327 3	27	6	421101814	414	10 50 179 5	3	2
420001114	450	11 23 820 3	65	36	421102214	58	10 58 163 4	24	8
420001114	479	99 29 588 14	13	2	421102214	63	99 23 451 14	3	4
420001114	480	10 35 063 3	13	4	421102214	512	11 28 629 9	36	2
420001114	487	11 28 397 7	16	4	421102414	473	11 24 444 4	20	10
420001114	488	11 28 397 8	16	4	421102414	582	99 38 329 14	33	2
420001114	489	11 28 399 5	16	8	421102614	544	10 53 145 5	16	2
420001114	490	11 28 399 7	16	8	421102814	570	11 28 774 6	51	2
420001114	491	11 28 794 6	15	4	421102814	633	10 51 176 9	18	2

Item	Sheet	Assembly	Pos.	Quantity	Item	Sheet	Assembly	Pos.	Quantity
421102914	637	99 10 116 14	46	2	421300514	264	11 24 114 2	71	4
421102914	639	99 23 405 14	3	12	421300514	604	11 29 444 5	73	4
421102914	641	99 23 420 14	3	12	421500614	408	10 55 876 0	7	30
421102914	643	97 05 997 03	6	14	421500614	417	10 55 876 1	7	30
421103014	58	10 58 163 4	14	3	421600901	408	10 55 876 0	53	54
421103014	164	11 24 113 8	78	4	421600901	417	10 55 876 1	53	54
421103014	311	10 51 969 7	18	8	421700314	75	11 24 773 5	36	4
421103014	535	99 26 359 14	27	6	421700508	304	11 24 483 7	88	48
421103014	544	10 53 145 5	17	8	422010414	75	11 24 773 5	38	20
421103014	577	99 48 521 14	12	2	422014001	617	54 02 705 14	23	3
421103214	64	10 51 969 4	19	2	4239009	95	10 11 834 9	24	8
421103214	512	11 28 629 9	37	4	423912001	412	96 93 178 01	69	12
421103214	533	11 29 426 7	53	1	425221314	31	10 53 048 9	9	1
421103214	541	11 29 938 4	37	2	425221314	311	10 51 969 7	16	4
421103214	570	11 28 774 6	52	8	425221314	633	10 51 176 9	20	2
421103214	577	99 48 521 14	13	4	425225414	633	10 51 176 9	21	8
421103314	577	99 48 521 14	28	12	425225614	633	10 51 176 9	51	4
421103314	650	11 23 619 7	20	1	4280008	97	10 11 835 0	31	4
421103414	493	91 85 910 14	1	4	428001014	615	54 02 703 14	45	1
421103414	501	91 85 911 14	1	2	4280020	457	61 61 541 14	3	3
421103414	507	99 03 609 14	1	8	428002914	617	54 02 705 14	13	1
421103414	512	11 28 629 9	38	16	4280032	124	10 13 802 7	41	2
421103414	525	11 24 336 5	71	2	4280034	111	98 84 402	41	1
421103414	535	99 26 359 14	28	12	428004514	616	54 02 704 14	30	1
421103414	542	10 59 968 1	19	4	428011901	412	96 93 178 01	19	5
421103414	571	99 26 362 14	14	12	428100914	615	54 02 703 14	46	1
421103414	577	99 48 521 14	14	1	4281013	615	54 02 703 14	4	1
421103514	535	99 26 359 14	29	4	4281016	616	54 02 704 14	31	1
421103514	542	10 59 968 1	21	12	4281017	124	10 13 802 7	40	1
421103514	571	99 26 362 14	22	4	4281017	132	10 13 803 2	40	1
421103514	637	99 10 116 14	42	2	4281037	548	59 21 280 14	30	2
421103514	644	10 51 971 3	24	12	4281037	617	54 02 705 14	14	1
421103614	309	99 29 803 14	18	6	428107101	412	96 93 178 01	76	1
421103614	460	99 30 060 14	13	4	428107714	617	54 02 705 14	21	1
421103614	492	99 24 404 14	13	4	429612001	412	96 93 178 01	57	1
421103614	500	99 24 405 14	13	4	432003714	451	11 23 820 3	97	2
421103614	506	99 24 406 14	13	8	432003714	525	11 24 336 5	35	2
421103614	519	99 24 594 14	13	4	432008001	412	96 93 178 01	78	1
421103614	528	11 28 852 3	11	2	432016214	58	10 58 163 4	40	1
421103614	633	10 51 176 9	19	8	432016214	570	11 28 774 6	26	1
421103714	476	99 26 417 14	14	8	432016214	582	99 38 329 14	34	2
421103714	519	99 24 594 14	16	16	433006314	414	10 50 179 5	4	2
421103814	450	11 23 820 3	12	8	433006314	516	11 28 357 6	7	2
421103814	483	11 28 726 4	11	2	433006614	63	99 23 451 14	4	4
421103814	582	99 38 329 14	29	1	433006714	311	10 51 969 7	12	8
421103814	644	10 51 971 3	20	2	433007508	58	10 58 163 4	31	4
421300214	44	10 56 070 1	72	4	433007708	58	10 58 163 4	25	4
421300214	165	10 51 948 1	71	4	433007714	633	10 51 176 9	47	2
421300214	255	11 24 114 0	74	24	433007814	633	10 51 176 9	22	2
421300214	261	11 24 114 1	71	22	433007914	544	10 53 145 5	18	8
421300214	264	11 24 114 2	72	6	433007914	570	11 28 774 6	28	1
421300214	268	11 24 114 3	71	28	433008108	473	11 24 444 4	26	4
421300214	276	11 24 114 5	94	12	433008108	521	99 23 398 14	33	2
421300214	280	11 24 114 6	72	2	433008108	570	11 28 774 6	29	4
421300414	42	10 56 070 0	70	3	433008214	64	10 51 969 4	16	4
421300414	47	10 56 073 2	70	3	433008814	512	11 28 629 9	48	2
421300514	164	11 24 113 8	77	4	433008814	582	99 38 329 14	25	4
421300514	255	11 24 114 0	72	20	433009014	164	11 24 113 8	31	4
421300514	261	11 24 114 1	70	28	433009014	637	99 10 116 14	30	2
421300514	262	11 28 574 7	70	4	433009114	58	10 58 163 4	15	2

Item	Sheet	Assembly	Pos.	Quantity	Item	Sheet	Assembly	Pos.	Quantity
433009114	512	11 28 629 9	49	2	433105008	528	11 28 852 3	12	2
433009114	533	11 29 426 7	38	1	433105008	535	99 26 359 14	25	2
433009114	577	99 48 521 14	19	2	433105008	571	99 26 362 14	15	2
433009414	535	99 26 359 14	32	4	433105008	577	99 48 521 14	21	3
433009414	537	99 35 031 14	12	1	433105008	633	10 51 176 9	25	8
433009514	460	99 30 060 14	14	2	433105008	637	99 10 116 14	44	2
433009514	476	99 26 417 14	15	8	433105008	650	11 23 619 7	11	1
433009514	492	99 24 404 14	14	2	433105414	308	10 52 656 0	12	4
433009514	500	99 24 405 14	14	2	433105414	582	99 38 329 14	27	2
433009514	506	99 24 406 14	14	6	433105414	606	10 51 743 9	12	2
433009514	519	99 24 594 14	14	6	433105414	626	11 21 546 2	11	1
433009714	644	10 51 971 3	33	4	433200208	633	10 51 176 9	46	2
433010314	64	10 51 969 4	20	2	433206014	522	99 30 800 14	14	1
433010314	493	91 85 910 14	2	2	433206014	574	10 55 753 7	21	1
433010314	501	91 85 911 14	2	2	433206014	575	10 55 757 6	21	1
433010314	507	99 03 609 14	2	6	433206014	577	99 48 521 14	48	1
433010314	512	11 28 629 9	50	2	433206014	621	10 55 372 1	51	8
433010314	535	99 26 359 14	33	10	433206014	633	10 51 176 9	26	1
433010314	542	10 59 968 1	20	12	433206214	450	11 23 820 3	33	2
433010314	571	99 26 362 14	18	10	433206214	621	10 55 372 1	52	10
433010314	577	99 48 521 14	32	4	433206214	633	10 51 176 9	27	2
433010314	644	10 51 971 3	25	4	433206314	309	99 29 803 14	21	6
433010314	650	11 23 619 7	21	1	433206314	637	99 10 116 14	31	2
433010614	582	99 38 329 14	30	3	450052114	58	10 58 163 4	30	2
433011114	644	10 51 971 3	21	2	450052114	63	99 23 451 14	2	2
433014214	473	11 24 444 4	21	2	451436614	58	10 58 163 4	13	1
433101208	494	11 23 290 7	12	1	453050914	639	99 23 405 14	5	12
433101208	512	11 28 629 9	53	2	453050914	641	99 23 420 14	4	12
433101208	521	99 23 398 14	34	8	453050914	643	97 05 997 03	5	14
433101208	533	11 29 426 7	36	4	460000903	635	95 34 317 03	6	2
433101208	541	11 29 938 4	41	6	460014603	164	11 24 113 8	74	2
433101208	577	99 48 521 14	41	2	460014603	408	10 55 876 0	9	45
433101208	633	10 51 176 9	23	8	460014603	417	10 55 876 1	9	45
433101208	639	99 23 405 14	6	12	4600157	335	99 29 386 14	11	16
433101208	641	99 23 420 14	6	12	4600157	336	99 29 434 14	11	16
433101208	643	97 05 997 03	7	14	4600170	333	99 29 392 14	7	8
433101208	671	11 89 568 8	30	4	4600170	335	99 29 386 14	20	12
433102508	450	11 23 820 3	56	2	4600170	336	99 29 434 14	20	12
433102508	491	11 28 794 6	18	2	460022203	341	10 51 968 2	11	48
433102508	533	11 29 426 7	37	3	460022203	582	99 38 329 14	42	2
433102508	537	99 35 031 14	13	1	460022703	75	11 24 773 5	37	14
433102508	541	11 29 938 4	42	2	460022703	304	11 24 483 7	89	34
433102508	544	10 53 145 5	19	2	460022703	332	99 29 389 14	5	4
433102508	557	11 28 982 7	18	2	460022703	333	99 29 392 14	5	4
433102508	570	11 28 774 6	24	1	460022703	335	99 29 386 14	14	16
433102508	577	99 48 521 14	20	2	460022703	336	99 29 434 14	14	16
433102508	644	10 51 971 3	29	8	460023503	10	11 29 618 6	60	8
433105008	309	99 29 803 14	19	6	460024203	320	10 51 968 6	16	2
433105008	450	11 23 820 3	13	8	460024203	333	99 29 392 14	8	8
433105008	460	99 30 060 14	15	2	460024203	335	99 29 386 14	15	6
433105008	483	11 28 726 4	12	2	460024203	336	99 29 434 14	15	6
433105008	492	99 24 404 14	15	2	4600257	334	99 29 388 14	4	7
433105008	493	91 85 910 14	6	2	4600320	339	99 04 645 14	64	1
433105008	500	99 24 405 14	15	2	4600366	10	11 29 618 6	61	36
433105008	501	91 85 911 14	6	2	4600366	312	10 51 969 8	613	8
433105008	506	99 24 406 14	15	2	4600366	344	10 55 216 1	7	8
433105008	507	99 03 609 14	6	2	4600385	168	10 58 017 0	62	8
433105008	512	11 28 629 9	54	2	4600385	194	10 14 843 8	5	2
433105008	519	99 24 594 14	15	2	4600385	242	10 11 557 7	7	15
433105008	525	11 24 336 5	20	2	4600505	10	11 29 618 6	57	16

Item	Sheet	Assembly	Pos.	Quantity
4600513	138	10 13 000 5	20	4
4600513	139	10 13 235 7	20	4
4600513	140	10 13 452 1	20	4
4600513	141	10 13 806 8	20	4
4600552	10	11 29 618 6	59	20
4600667	541	11 29 938 4	48	2
4600706	311	10 51 969 7	17	4
4630200	44	10 56 070 1	63	4
4630200	344	10 55 216 1	8	8
4630200	412	96 93 178 01	11	15
4635283	165	10 51 948 1	73	12
4635283	268	11 24 114 3	72	8
4635283	276	11 24 114 5	95	2
470002414	445	91 90 239 14	700	1
470700714	547	10 53 146 1	611	1
470701414	76	11 24 773 5	691	1
470905214	254	11 24 114 0	36	1
470905714	254	11 24 114 0	37	3
471004514	12	11 29 618 6	602	11
471004514	66	10 51 969 5	605	1
471004514	76	11 24 773 5	620	1
471004514	394	11 25 903 1	617	6
471004514	645	10 51 971 2	703	2
471004514	652	10 51 973 8	611	1
471004514	689	10 51 728 1	605	2
471004614	76	11 24 773 5	619	2
471004614	312	10 51 969 8	603	2
471004614	321	10 51 968 7	607	2
471004614	394	11 25 903 1	618	2
471004614	435	11 26 260 6	708	1
471004614	441	11 26 261 1	708	1
471007014	14	11 29 618 6	706	4
471007014	344	10 55 216 1	619	1
471008014	76	11 24 773 5	677	3
471008214	12	11 29 618 6	601	3
471008214	76	11 24 773 5	611	8
471008214	394	11 25 903 1	612	8
471008214	435	11 26 260 6	709	1
471008214	441	11 26 261 1	709	1
471016401	78	11 24 682 0	590	2
471030508	12	11 29 618 6	600	3
471030508	76	11 24 773 5	678	1
471030608	12	11 29 618 6	603	12
471030608	66	10 51 969 5	614	1
471030608	394	11 25 903 1	637	2
471030708	16	11 29 618 6	737	1
471030708	435	11 26 260 6	710	1
471030708	441	11 26 261 1	710	1
471031108	76	11 24 773 5	672	1
471031108	394	11 25 903 1	654	1
471031308	76	11 24 773 5	632	2
471031308	394	11 25 903 1	616	2
471031508	76	11 24 773 5	631	3
471031508	275	11 24 114 5	31	2
471031808	76	11 24 773 5	680	2
471032108	652	10 51 973 8	610	2
471032608	12	11 29 618 6	622	1
471032608	66	10 51 969 5	604	2
471032608	394	11 25 903 1	615	6
471032608	465	10 51 959 1	606	2
471032608	547	10 53 146 1	608	2
471032608	668	11 23 524 8	700	8
471032608	674	10 55 459 4	600	1
471032708	14	11 29 618 6	658	4
471032708	66	10 51 969 5	603	2
471032708	392	11 25 903 1	600	24
471032708	465	10 51 959 1	627	2
471032708	547	10 53 146 1	607	1
471032708	645	10 51 971 2	704	2
471032708	662	11 89 408 3	703	8
471032708	689	10 51 728 1	609	1
471032808	12	11 29 618 6	621	27
471032808	76	11 24 773 5	630	3
471032808	312	10 51 969 8	602	3
471032808	321	10 51 968 7	609	3
471032808	394	11 25 903 1	622	2
471032808	445	91 90 239 14	701	1
471032808	689	10 51 728 1	600	1
471032908	12	11 29 618 6	616	1
471033014	76	11 24 773 5	629	1
471033014	312	10 51 969 8	601	1
471033014	394	11 25 903 1	651	2
471033014	608	10 51 726 2	602	2
471033114	14	11 29 618 6	707	1
471033114	547	10 53 146 1	606	3
471033214	16	11 29 618 6	722	2
471033214	394	11 25 903 1	636	1
471033214	453	10 51 826 1	608	3
471033214	465	10 51 959 1	605	3
471033214	547	10 53 146 1	605	5
471033214	608	10 51 726 2	603	2
471033214	645	10 51 971 2	709	2
471033214	662	11 89 408 3	704	1
471033314	321	10 51 968 7	606	1
471033414	16	11 29 618 6	725	1
471033614	16	11 29 618 6	738	1
471033614	547	10 53 146 1	604	1
471034414	16	11 29 618 6	726	2
471034414	344	10 55 216 1	612	2
471034414	453	10 51 826 1	604	2
471034708	14	11 29 618 6	672	4
471034708	76	11 24 773 5	637	1
471034714	270	11 24 114 4	25	2
471034714	312	10 51 969 8	600	1
471036014	394	11 25 903 1	652	2
471039408	321	10 51 968 7	612	1
471039408	344	10 55 216 1	611	2
471039708	344	10 55 216 1	618	2
471039708	608	10 51 726 2	600	1
471039908	76	11 24 773 5	635	3
471039908	394	11 25 903 1	655	2
471100114	12	11 29 618 6	617	3
471100114	465	10 51 959 1	604	2
471100414	12	11 29 618 6	608	2
471100614	394	11 25 903 1	620	2
471100714	16	11 29 618 6	756	1
471100714	465	10 51 959 1	603	1
472531508	16	11 29 618 6	723	1
472531508	465	10 51 959 1	624	2
472531508	652	10 51 973 8	608	3

Item	Sheet	Assembly	Pos.	Quantity	Item	Sheet	Assembly	Pos.	Quantity
473210214	465	10 51 959 1	632	1	477704614	48	10 56 073 3	17	5
473210214	652	10 51 973 8	607	3	477704614	75	11 24 773 5	300	1
473210214	662	11 89 408 3	700	1	477704914	76	11 24 773 5	306	1
473231214	465	10 51 959 1	633	1	477704914	167	10 57 532 2	32	1
474001214	16	11 29 618 6	760	1	477704914	254	11 24 114 0	38	4
474002314	12	11 29 618 6	620	4	477704914	264	11 24 114 2	64	2
474002414	16	11 29 618 6	744	2	477705114	321	10 51 968 7	202	1
474002414	394	11 25 903 1	614	4	477705214	275	11 24 114 5	58	1
474032614	12	11 29 618 6	628	3	481930314	652	10 51 973 8	612	1
474032614	453	10 51 826 1	602	4	481930414	12	11 29 618 6	630	3
474032614	465	10 51 959 1	600	8	481930414	394	11 25 903 1	624	2
474032714	14	11 29 618 6	650	2	481930414	445	91 90 239 14	704	1
474032914	14	11 29 618 6	636	2	481930514	435	11 26 260 6	703	1
474033014	14	11 29 618 6	719	4	481930514	441	11 26 261 1	703	1
474033014	394	11 25 903 1	647	8	481930614	465	10 51 959 1	622	1
474033014	435	11 26 260 6	714	2	481930614	547	10 53 146 1	602	3
474033014	441	11 26 261 1	714	2	481930714	652	10 51 973 8	604	1
474033014	453	10 51 826 1	601	4	481930814	547	10 53 146 1	601	1
475002514	465	10 51 959 1	628	2	481931114	16	11 29 618 6	761	1
475033014	652	10 51 973 8	609	3	481931614	76	11 24 773 5	687	1
475033614	465	10 51 959 1	619	1	481933014	394	11 25 903 1	623	4
475501414	14	11 29 618 6	635	2	482000814	604	11 29 444 5	25	8
475501414	392	11 25 903 1	604	4	482330814	16	11 29 618 6	730	1
475501914	76	11 24 773 5	685	1	482330814	76	11 24 773 5	675	1
475501914	652	10 51 973 8	606	1	482331114	652	10 51 973 8	603	3
475502514	394	11 25 903 1	625	4	482331914	16	11 29 618 6	721	3
476608008	254	11 24 114 0	39	1	482331914	453	10 51 826 1	600	2
477100208	275	11 24 114 5	26	3	482430314	14	11 29 618 6	693	1
477102614	39	99 14 627 14	32	4	482430314	344	10 55 216 1	201	1
477102814	275	11 24 114 5	57	4	482430614	392	11 25 903 1	606	2
477102814	604	11 29 444 5	39	2	482431214	652	10 51 973 8	602	1
477400314	76	11 24 773 5	690	2	482431314	12	11 29 618 6	204	1
477400314	445	91 90 239 14	702	1	482431314	76	11 24 773 5	643	2
477400414	465	10 51 959 1	673	1	482431314	435	11 26 260 6	705	1
477400414	668	11 23 524 8	605	8	482431314	441	11 26 261 1	705	1
477400614	453	10 51 826 1	208	2	482431414	435	11 26 260 6	706	1
477400714	14	11 29 618 6	633	2	482431414	441	11 26 261 1	706	1
477400814	344	10 55 216 1	624	4	482431514	465	10 51 959 1	671	1
477401014	453	10 51 826 1	202	4	482431714	344	10 55 216 1	623	4
477700114	14	11 29 618 6	639	2	482530814	16	11 29 618 6	755	2
477700114	76	11 24 773 5	655	1	482530814	76	11 24 773 5	660	1
477700114	453	10 51 826 1	614	2	482530914	16	11 29 618 6	736	1
477700214	12	11 29 618 6	619	1	482530914	75	11 24 773 5	301	2
477700214	392	11 25 903 1	23	1	482531614	12	11 29 618 6	615	1
477700414	76	11 24 773 5	689	2	482531814	14	11 29 618 6	652	2
477700414	445	91 90 239 14	703	1	482531814	394	11 25 903 1	649	4
477700414	547	10 53 146 1	206	1	485430714	16	11 29 618 6	748	1
477700414	604	11 29 444 5	41	1	485431214	14	11 29 618 6	714	2
477700514	14	11 29 618 6	638	6	485431214	76	11 24 773 5	683	3
477700514	453	10 51 826 1	612	2	485431314	14	11 29 618 6	666	4
477700514	465	10 51 959 1	202	1	485431414	12	11 29 618 6	205	1
477700514	668	11 23 524 8	606	8	485432814	16	11 29 618 6	759	1
477700814	14	11 29 618 6	634	1	485432914	547	10 53 146 1	600	1
477701114	453	10 51 826 1	207	2	485433314	76	11 24 773 5	684	1
477701414	14	11 29 618 6	632	2	485433314	435	11 26 260 6	713	2
477701514	344	10 55 216 1	625	4	485433314	441	11 26 261 1	713	2
477701814	453	10 51 826 1	211	4	485433314	465	10 51 959 1	613	8
477704514	394	11 25 903 1	650	1	485433314	608	10 51 726 2	615	2
477704614	14	11 29 618 6	720	3	485433314	645	10 51 971 2	710	2
477704614	44	10 56 070 1	19	1	485433414	16	11 29 618 6	758	1

Item	Sheet	Assembly	Pos.	Quantity	Item	Sheet	Assembly	Pos.	Quantity
485433414	445	91 90 239 14	705	1	4900125	97	10 11 835 0	30	2
485433414	465	10 51 959 1	629	2	4900262	254	11 24 114 0	32	7
485433414	547	10 53 146 1	612	2	4900778	39	99 14 627 14	3	4
485433514	66	10 51 969 5	610	1	4900778	221	10 14 736 9	11	2
485433514	465	10 51 959 1	630	1	4900778	236	10 14 013 6	25	2
485434214	16	11 29 618 6	747	1	4900778	255	11 24 114 0	91	4
485435014	14	11 29 618 6	651	2	4900778	447	91 76 658 14	2	1
485435714	14	11 29 618 6	713	1	4900980	652	10 51 973 8	302	2
485436414	394	11 25 903 1	629	2	4900981	412	96 93 178 01	62	24
485436414	604	11 29 444 5	43	1	4901104	204	10 13 382 3	8	1
485436414	608	10 51 726 2	617	1	4901138	186	10 14 671 6	2	1
485501714	58	10 58 163 4	23	2	4901195	98	92 67 343	13	1
485506014	550	99 31 679 14	8	2	4901450	240	10 12 037 2	4	3
485518914	644	10 51 971 3	19	2	4901893	169	11 24 113 9	71	4
485519214	650	11 23 619 7	19	1	4902260	168	10 58 017 0	60	10
485529714	78	11 24 682 0	370	2	491033414	652	10 51 973 8	601	1
485529814	78	11 24 682 0	410	2	491101214	16	11 29 618 6	757	1
485544014	582	99 38 329 14	17	1	4980000	203	10 13 394 7	3	1
485544014	633	10 51 176 9	28	1	4980012	242	10 11 557 7	6	2
485546414	386	11 30 962 5	6	4	4980013	95	10 11 834 9	25	16
485546514	350	11 29 327 3	50	12	4980046	99	10 11 835 7	44	2
485546514	386	11 30 962 5	7	4	4980082	129	10 14 131 6	21	1
485549914	41	10 51 961 6	21	2	4980362	174	10 15 438 6	2	6
485549914	62	10 56 069 4	2	8	4980363	193	10 13 728 5	10	3
485549914	300	11 24 922 2	32	53	4980482	190	10 14 351 1	7	2
485550014	60	10 56 067 3	19	4	4980548	95	10 11 834 9	26	8
485550014	282	11 24 409 0	29	21	4980638	127	10 12 224 5	44	2
485550014	300	11 24 922 2	25	2	4980664	217	10 14 588 5	10	1
485550114	284	11 24 409 0	61	5	4980741	237	10 14 511 2	13	1
485550114	332	99 29 389 14	4	4	4980750	104	10 13 975 2	46	1
485550114	333	99 29 392 14	4	4	4980805	204	10 13 382 3	15	1
485550114	335	99 29 386 14	16	2	4980805	222	10 14 736 4	4	3
485550114	336	99 29 434 14	16	2	4980805	239	10 14 584 5	7	1
485550114	350	11 29 327 3	30	3	4980805	240	10 12 037 2	3	3
485550114	604	11 29 444 5	82	1	4980840	101	90 74 418	20	4
485550114	621	10 55 372 1	43	2	4980920	133	10 12 226 2	21	8
485553914	706	10 52 293 0	16	3	4980938	103	10 13 333 4	20	2
485555314	60	10 56 067 3	12	2	4980977	127	10 12 224 5	46	4
485556314	614	54 02 702 14	23	4	4980986	133	10 12 226 2	20	1
485557714	350	11 29 327 3	29	12	4981029	186	10 14 671 6	8	3
485557714	599	11 22 322 6	5	2	4981077	121	10 12 224 8	22	2
485558914	570	11 28 774 6	38	4	4981218	99	10 11 835 7	43	8
485559814	60	10 56 067 3	14	2	4981218	106	98 89 833	43	4
485565814	59	99 08 706 14	2	2	4981218	110	98 89 832	43	4
485565814	487	11 28 397 7	12	1	4981226	216	10 14 333 9	6	6
485565814	488	11 28 397 8	12	1	4981232	219	10 14 179 0	1	2
485565814	515	10 59 863 3	24	2	4981235	184	10 14 591 9	3	1
485565814	637	99 10 116 14	43	2	4981235	236	10 14 013 6	10	1
485565814	640	99 10 125 14	5	1	5004624	182	10 14 861 5	8	1
485565814	642	99 06 789 14	5	1	5004927	179	10 14 201 8	9	1
485568414	637	99 10 116 14	38	2	5005525	419	11 23 548 1	41	4
485568514	333	99 29 392 14	9	4	501507014	614	54 02 702 14	13	1
485568514	335	99 29 386 14	17	12	501507214	614	54 02 702 14	14	1
485568514	336	99 29 434 14	17	12	501507314	614	54 02 702 14	15	1
485568514	491	11 28 794 6	14	2	501532014	614	54 02 702 14	9	1
485568514	557	11 28 982 7	14	2	501540414	339	99 04 645 14	97	8
485569314	422	99 26 718 14	14	16	501540514	339	99 04 645 14	98	7
485569314	624	11 24 575 5	14	16	501559414	339	99 04 645 14	96	1
485570714	60	10 56 067 3	23	4	502027514	339	99 04 645 14	122	1
485581914	34	10 56 645 8	54	1	502027614	339	99 04 645 14	60	2

Item	Sheet	Assembly	Pos.	Quantity	Item	Sheet	Assembly	Pos.	Quantity
502037201	412	96 93 178 01	80	1	510694514	76	11 24 773 5	671	14
502050814	258	51 22 501 14	990	1	510694514	312	10 51 969 8	201	2
502800014	547	10 53 146 1	7	1	510694514	321	10 51 968 7	201	2
505104914	78	11 24 682 0	260	1	510694514	344	10 55 216 1	203	2
505105814	78	11 24 682 0	250	2	510694514	392	11 25 903 1	204	8
506801208	275	11 24 114 5	28	1	510694514	435	11 26 260 6	700	2
510095914	712	10 52 957 6	10	1	510694514	441	11 26 261 1	700	2
510232214	608	10 51 726 2	2	1	510694514	465	10 51 959 1	201	1
510403414	392	11 25 903 1	14	4	510694514	547	10 53 146 1	205	2
510411614	465	10 51 959 1	10	1	510694514	652	10 51 973 8	202	1
510427214	17	10 35 148 6	6	2	510695314	547	10 53 146 1	204	1
510427214	608	10 51 726 2	5	1	510695314	652	10 51 973 8	201	2
510427914	465	10 51 959 1	5	1	510695314	662	11 89 408 3	706	1
510429214	465	10 51 959 1	4	1	510701214	16	11 29 618 6	745	1
510438514	392	11 25 903 1	4	2	510701314	14	11 29 618 6	677	2
510466114	689	10 51 728 1	2	1	510701914	14	11 29 618 6	711	2
510493714	435	11 26 260 6	4	1	510702014	16	11 29 618 6	742	1
510493714	441	11 26 261 1	4	1	510702414	14	11 29 618 6	712	1
510511814	408	10 55 876 0	37	2	510702414	435	11 26 260 6	702	1
510511814	417	10 55 876 1	37	2	510703914	16	11 29 618 6	740	1
510548714	10	11 29 618 6	105	8	510704614	14	11 29 618 6	664	1
510559314	254	11 24 114 0	43	2.5	510705314	10	11 29 618 6	43	2
510571914	8	11 29 618 6	15	1	510709114	652	10 51 973 8	600	1
510571914	465	10 51 959 1	9	1	510709214	76	11 24 773 5	679	1
510572214	8	11 29 618 6	14	2	510710614	392	11 25 903 1	10	4
510572214	465	10 51 959 1	8	1	510710814	10	11 29 618 6	44	4
510574414	10	11 29 618 6	100	8	510710814	167	10 57 532 2	15	1
510574414	167	10 57 532 2	21	2	510713814	46	51 06 906 14	1	1
510586614	10	11 29 618 6	103	12	511414514	75	11 24 773 5	18	1
510586614	321	10 51 968 7	617	4	511419314	75	11 24 773 5	22	1
510586614	394	11 25 903 1	646	16	511432714	8	11 29 618 6	11	5
510586614	435	11 26 260 6	730	8	511432714	312	10 51 969 8	4	1
510586614	441	11 26 261 1	730	8	511432714	321	10 51 968 7	3	1
510586914	10	11 29 618 6	104	18	511434714	344	10 55 216 1	2	1
510586914	312	10 51 969 8	611	4	511442214	75	11 24 773 5	27	1
510586914	344	10 55 216 1	630	4	511455014	608	10 51 726 2	3	1
510587514	10	11 29 618 6	101	8	511458114	392	11 25 903 1	16	4
510587514	76	11 24 773 5	312	2	511458814	435	11 26 260 6	5	1
510587514	344	10 55 216 1	631	8	511458814	441	11 26 261 1	5	1
510587514	465	10 51 959 1	650	2	511458814	547	10 53 146 1	13	1
510587514	652	10 51 973 8	614	2	511467914	608	10 51 726 2	4	1
510587908	167	10 57 532 2	26	1	511475514	465	10 51 959 1	7	1
5106280	44	10 56 070 1	18	4	511476914	312	10 51 969 8	3	1
510629008	392	11 25 903 1	205	2	511476914	321	10 51 968 7	4	1
510641214	75	11 24 773 5	16	1	511480614	674	10 55 459 4	2	1
510662614	8	11 29 618 6	12	2	511491914	8	11 29 618 6	7	2
510662914	8	11 29 618 6	23	3	511491914	392	11 25 903 1	11	2
510662914	312	10 51 969 8	5	1	511493914	313	51 22 527 14	51	2
510662914	321	10 51 968 7	5	1	511495814	8	11 29 618 6	20	1
510664814	12	11 29 618 6	200	2	511502414	10	11 29 618 6	102	24
510664814	435	11 26 260 6	701	2	511502414	76	11 24 773 5	310	6
510664814	441	11 26 261 1	701	2	511502414	167	10 57 532 2	20	6
510664814	608	10 51 726 2	613	2	511511214	8	11 29 618 6	18	1
510682014	8	11 29 618 6	39	1	511511314	8	11 29 618 6	17	1
510682014	445	91 90 239 14	1	1	511598114	167	10 57 532 2	22	2
510690614	44	10 56 070 1	13	1	511607014	465	10 51 959 1	6	1
510694314	444	10 56 183 8	10	2	511607214	8	11 29 618 6	31	1
510694314	547	10 53 146 1	12	3	511614214	322	51 22 942 14	61	1
510694514	12	11 29 618 6	202	19	511619614	313	51 22 527 14	50	2
510694514	66	10 51 969 5	201	2	511631514	10	11 29 618 6	41	1

Item	Sheet	Assembly	Pos.	Quantity	Item	Sheet	Assembly	Pos.	Quantity
511637714	75	11 24 773 5	15	1	540271714	614	54 02 702 14	5	1
511639114	547	10 53 146 1	6	1	540271814	615	54 02 703 14	1	1
511639714	322	51 22 942 14	50	2	540271914	615	54 02 703 14	3	1
511640414	652	10 51 973 8	3	1	540272014	615	54 02 703 14	30	1
511640614	158	51 16 377 14	1	1	540272114	615	54 02 703 14	31	1
511640714	158	51 16 377 14	2	1	540272214	615	54 02 703 14	32	1
511640814	158	51 16 377 14	3	1	540272314	615	54 02 703 14	33	1
511655114	399	11 22 473 8	50	2	540272414	615	54 02 703 14	60	1
511657614	8	11 29 618 6	13	1	540272514	616	54 02 704 14	1	1
511704214	8	11 29 618 6	8	1	540272614	616	54 02 704 14	2	3
511704314	445	91 90 239 14	2	1	540272714	616	54 02 704 14	3	1
511708414	8	11 29 618 6	16	1	540272814	617	54 02 705 14	1	1
511710214	22	51 17 042 14	1	1	540272914	617	54 02 705 14	4	1
511710214	446	51 17 043 14	1	1	540273014	617	54 02 705 14	7	1
511710314	24	51 05 719 14	13	1	540273114	617	54 02 705 14	11	1
511713914	254	11 24 114 0	40	1	540273214	617	54 02 705 14	20	1
511713914	275	11 24 114 5	36	4	540273314	614	54 02 702 14	1	1
512214414	75	11 24 773 5	10	1	550838008	604	11 29 444 5	31	2
512249914	75	11 24 773 5	7	1	550849508	604	11 29 444 5	26	5
512250114	257	10 57 423 7	6	1	550900914	264	11 24 114 2	16	1
512252714	312	10 51 969 8	2	1	550930514	604	11 29 444 5	21	1
512256614	346	51 14 347 14	250	1	550936214	255	11 24 114 0	94	1
512259414	313	51 22 527 14	990	1	550945314	26	10 22 592 5	6	1
512259514	313	51 22 527 14	61	1	552006114	44	10 56 070 1	26	2
512294214	321	10 51 968 7	2	1	552066514	44	10 56 070 1	22	2
512299114	344	10 55 216 1	3	2	553078814	699	11 23 189 1	15	2.2
512299214	347	51 22 991 14	990	1	553079914	350	11 29 327 3	13	1
512401414	322	51 22 942 14	60	1	553084214	604	11 29 444 5	22	1
512401514	322	51 22 942 14	51	2	553087814	275	11 24 114 5	37	1
512402214	322	51 22 942 14	990	1	553102308	604	11 29 444 5	29	6
512405914	392	11 25 903 1	3	2	553128608	275	11 24 114 5	70	1.5
512406114	613	54 02 701 14	11	1	553183708	273	10 30 300 7	6	1
512406214	613	54 02 701 14	21	1	553187208	604	11 29 444 5	10	1
512411914	399	11 22 473 8	10	1	553191108	604	11 29 444 5	20	2
513313914	8	11 29 618 6	10	2	5609144	382	10 28 999 3	53	1
513314114	392	11 25 903 1	13	4	5700024	179	10 14 201 8	8	5
513319014	403	51 33 141 14	99	1	5700088	200	10 12 948 0	2	1
513319214	23	51 33 139 14	99	1	570948608	154	11 21 593 6	33	1
513319614	23	51 33 139 14	13	1	570950308	149	70 19 834	1	1
513319814	403	51 33 141 14	17	1	571360008	339	99 04 645 14	50	1
513325614	548	59 21 280 14	22	1	571827308	78	11 24 682 0	400	8
514618508	86	11 21 993 0	47	1	591645108	284	11 24 409 0	64	1
540136314	66	10 51 969 5	3	4	592000814	689	10 51 728 1	3	1
540244214	613	54 02 701 14	14	72	592007514	350	11 29 327 3	14	1
540270114	612	59 20 694 14	1	1	592022414	465	10 51 959 1	3	2
540270214	612	59 20 694 14	21	1	592031814	690	59 20 008 14	9	1
540270314	612	59 20 694 14	22	1	592044714	8	11 29 618 6	33	1
540270414	612	59 20 694 14	23	1	592052914	713	51 00 959 14	29	1
540270514	612	59 20 694 14	24	1	592054714	339	99 04 645 14	95	1
540270614	613	54 02 701 14	12	3	592069414	606	10 51 743 9	27	1
540270714	613	54 02 701 14	13	1	592070414	167	10 57 532 2	7	1
540270814	613	54 02 701 14	15	6	592089814	339	99 04 645 14	69	1
540270914	613	54 02 701 14	23	1	592104114	66	10 51 969 5	2	2
540271014	613	54 02 701 14	22	3	592104214	652	10 51 973 8	2	1
540271114	613	54 02 701 14	24	48	592128014	547	10 53 146 1	2	2
540271214	613	54 02 701 14	25	6	592128514	547	10 53 146 1	8	1
540271314	613	54 02 701 14	27	1	592145814	8	11 29 618 6	4	1
540271414	613	54 02 701 14	28	3	592158414	652	10 51 973 8	4	1
540271514	613	54 02 701 14	29	1	592178314	652	10 51 973 8	5	1
540271614	614	54 02 702 14	2	1	592178514	78	11 24 682 0	20	1

Item	Sheet	Assembly	Pos.	Quantity	Item	Sheet	Assembly	Pos.	Quantity
592178914	78	11 24 682 0	580	1	592291614	376	59 22 914 14	2	1
592179114	547	10 53 146 1	3	2	592291714	376	59 22 914 14	3	1
592181614	548	59 21 280 14	18	1	592291814	367	10 35 250 8	121	1
592182614	668	11 23 524 8	1	4	592291914	367	10 35 250 8	123	1
592200514	75	11 24 773 5	20	1	592293014	367	10 35 250 8	124	1
592257814	167	10 57 532 2	44	1	592293114	379	10 58 467 1	51	1
592274714	392	11 25 903 1	6	2	592293214	379	10 58 467 1	60	1
592274714	453	10 51 826 1	4	1	592293314	378	59 22 930 14	70	1
592285714	370	10 50 133 3	3	1	592293414	378	59 22 930 14	180	1
592285814	370	10 50 133 3	4	1	592293514	378	59 22 930 14	190	1
592286314	370	10 50 133 3	26	1	592293614	378	59 22 930 14	230	1
592286514	366	10 35 250 8	36	1	592293714	378	59 22 930 14	240	2
592286514	370	10 50 133 3	11	5	592293814	378	59 22 930 14	260	1
592286714	366	10 35 250 8	9	2	592316114	78	11 24 682 0	150	1
592286814	366	10 35 250 8	13	1	592316314	78	11 24 682 0	210	1
592286914	366	10 35 250 8	25	1	592316414	78	11 24 682 0	220	1
592287014	366	10 35 250 8	26	1	592317014	78	11 24 682 0	600	1
592287114	366	10 35 250 8	28	1	592323114	392	11 25 903 1	5	4
592287214	373	59 22 871 14	10	1	592323514	286	11 24 409 1	11	7
592287414	373	59 22 871 14	13	1	592323514	298	10 54 591 0	22	3
592287514	373	59 22 871 14	15	1	592330814	167	10 57 532 2	14	1
592287614	373	59 22 871 14	16	1	592333714	373	59 22 871 14	6	1
592287714	373	59 22 871 14	17	1	6001593	359	10 53 171 8	21	5
592287814	373	59 22 871 14	18	1	6001593	629	11 21 530 2	36	1
592287914	373	59 22 871 14	19	1	600204105	708	10 56 013 7	45	5
592288014	373	59 22 871 14	20	1	6003031	351	11 27 973 6	47	6
592288114	373	59 22 871 14	31	1	6003031	352	11 27 973 6	95	6
592288214	373	59 22 871 14	32	1	600454314	351	11 27 973 6	53	6.5
592288314	366	10 35 250 8	33	1	600454314	566	10 57 624 5	85	4.5
592288314	373	59 22 871 14	12	1	600454314	568	99 38 560 14	1002	2
592288414	366	10 35 250 8	34	1	600454314	578	97 14 959 03	35	4
592288514	366	10 35 250 8	43	1	600454314	583	91 95 871 14	35	4
592288614	366	10 35 250 8	44	1	600454314	634	10 51 167 1	35	60
592288714	366	10 35 250 8	45	1	602008508	254	11 24 114 0	57	6
592288814	366	10 35 250 8	46	1	602008808	419	11 23 548 1	38	4
592288914	366	10 35 250 8	47	1	602010114	419	11 23 548 1	36	8
592289014	366	10 35 250 8	48	1	602016514	451	11 23 820 3	73	4
592289114	366	10 35 250 8	49	1	602017114	450	11 23 820 3	72	4
592289214	366	10 35 250 8	50	1	602017114	485	11 28 390 8	19	4
592289314	366	10 35 250 8	52	1	602017114	499	11 28 583 8	19	4
592289614	374	10 35 267 2	2	1	602017114	505	11 28 626 1	19	4
592289714	374	10 35 267 2	3	1	602025814	255	11 24 114 0	93	3
592289814	367	10 35 250 8	72	1	602026414	408	10 55 876 0	48	3
592289914	367	10 35 250 8	73	1	602026414	417	10 55 876 1	48	3
592290014	367	10 35 250 8	76	1	602106714	34	10 56 645 8	58	0.37
592290114	367	10 35 250 8	78	1	602125114	34	10 56 645 8	22	7
592290214	367	10 35 250 8	81	1	602134114	34	10 56 645 8	59	4
592290314	367	10 35 250 8	82	1	602151914	354	10 55 963 5	86	4
592290414	367	10 35 250 8	84	1	602153014	708	10 56 013 7	53	1
592290514	367	10 35 250 8	85	1	602153214	708	10 56 013 7	51	2
592290614	375	59 22 905 14	4	1	602153814	34	10 56 645 8	23	39
592290714	375	59 22 905 14	6	1	602153814	354	10 55 963 5	74	13
592290814	375	59 22 905 14	8	1	602153814	354	10 55 963 5	80	4
592290914	367	10 35 250 8	93	1	602203914	351	11 27 973 6	55	6
592291014	367	10 35 250 8	94	1	602203914	352	11 27 973 6	92	6
592291114	367	10 35 250 8	97	1	602203914	715	10 52 155 9	71	2
592291214	367	10 35 250 8	102	1	602206114	34	10 56 645 8	24	1
592291314	367	10 35 250 8	108	1	602206514	29	11 24 519 0	74	2
592291414	367	10 35 250 8	116	1	602208714	354	10 55 963 5	92	1
592291514	376	59 22 914 14	1	1	602209014	352	11 27 973 6	91	1

Item	Sheet	Assembly	Pos.	Quantity	Item	Sheet	Assembly	Pos.	Quantity
602209314	34	10 56 645 8	80	42	605604714	583	91 95 871 14	31	1
602209314	568	99 38 560 14	80	3	605604714	634	10 51 167 1	31	1
602209714	354	10 55 963 5	93	1	605604914	29	11 24 519 0	93	1
602303214	34	10 56 645 8	73	1	605609514	29	11 24 519 0	94	1
602305914	351	11 27 973 6	54	3	605609514	34	10 56 645 8	32	1
602305914	715	10 52 155 9	70	1	605609514	578	97 14 959 03	51	1
602307708	34	10 56 645 8	100	2	605609514	583	91 95 871 14	51	1
602331114	697	10 56 427 9	112	4	605609514	634	10 51 167 1	51	1
602440101	628	99 24 978 14	37	2	605610301	34	10 56 645 8	426	24
602453214	363	91 65 251 14	5	2	605612014	34	10 56 645 8	42	1
602453914	363	91 65 251 14	8	2	605612214	708	10 56 013 7	42	1
602454614	363	91 65 251 14	2	2	605613701	34	10 56 645 8	41	1
602454714	363	91 65 251 14	4	2	605614714	712	10 52 957 6	14	2
602457014	363	91 65 251 14	3	2	605616014	628	99 24 978 14	36	2
602457114	363	91 65 251 14	6	2	605616114	566	10 57 624 5	81	2
602457214	363	91 65 251 14	7	2	605618014	566	10 57 624 5	82	2
602458214	359	10 53 171 8	15	8	605619814	566	10 57 624 5	53	6
602481914	363	91 65 251 14	1	1	605756914	30	10 35 167 4	2	1
602501208	34	10 56 645 8	55	1	606070908	28	11 24 519 0	35	1
602604314	715	10 52 155 9	56	1	606214914	28	11 24 519 0	39	3
602620201	566	10 57 624 5	84	2	606271314	708	10 56 013 7	33	1
602620201	628	99 24 978 14	38	2	606272314	357	11 21 481 8	1	1
602707214	443	10 56 187 5	90	1	606279014	424	11 22 050 0	20	1
602707414	443	10 56 187 5	91	1	606279014	439	11 22 050 1	20	1
602720514	34	10 56 645 8	28	4	606279214	436	11 21 634 2	1	1
602730714	34	10 56 645 8	25	3	606281014	28	11 24 519 0	45	1
602731714	34	10 56 645 8	51	1	606281114	28	11 24 519 0	46	1
602812414	354	10 55 963 5	88	1	606644414	566	10 57 624 5	27	1
602812714	34	10 56 645 8	26	1	606655108	28	11 24 519 0	43	1
602812714	354	10 55 963 5	87	1	606655208	567	92 75 218 08	1	1
602832214	708	10 56 013 7	54	1	606655308	567	92 75 218 08	2	1
602832314	354	10 55 963 5	72	1	606667214	629	11 21 530 2	37	1
602835914	34	10 56 645 8	52	1	606667814	359	10 53 171 8	12	1
603000108	697	10 56 427 9	201	1.03	606672114	359	10 53 171 8	10	2
603000308	566	10 57 624 5	86	1.2	606674714	359	10 53 171 8	11	4
603000408	288	11 24 409 1	17	2.3	606718408	362	11 26 095 7	35	1
603018114	515	10 59 863 3	18	0.2	606907114	714	10 52 155 9	37	1
604105314	354	10 55 963 5	68	5	607021114	32	70 27 205	15	1
604105314	355	99 20 811 14	5	5	607021714	351	11 27 973 6	42	1
604105414	355	99 20 811 14	7	5	607021714	354	10 55 963 5	42	1
604105514	354	10 55 963 5	69	41	607023214	351	11 27 973 6	43	1
604105514	355	99 20 811 14	10	10	607023214	354	10 55 963 5	43	1
604105614	354	10 55 963 5	70	6	607147008	351	11 27 973 6	41	1
604105614	355	99 20 811 14	15	5	607147008	354	10 55 963 5	41	1
605010314	708	10 56 013 7	41	1	611039214	714	10 52 155 9	21	1
605013508	474	10 53 120 7	51	2	611052614	351	11 27 973 6	61	1
605127914	697	10 56 427 9	1000	2	611124514	364	61 10 526 14	1	1
605253314	354	10 55 963 5	201	11	612436814	358	10 03 610 7	11	1
605253414	354	10 55 963 5	211	1	614027114	351	11 27 973 6	74	1
605254114	354	10 55 963 5	213	1	614046114	351	11 27 973 6	81	1
605254214	354	10 55 963 5	203	11	616154114	456	91 92 528 14	21	1
605260114	568	99 38 560 14	1000	1	616155214	457	61 61 541 14	4	2
605264814	351	11 27 973 6	51	3	616155414	457	61 61 541 14	10	1
605600401	34	10 56 645 8	31	1	616155514	457	61 61 541 14	11	1
605601701	578	97 14 959 03	32	6	6202973	694	10 28 999 2	53	1
605601701	583	91 95 871 14	32	8	6203137	352	11 27 973 6	93	1
605601701	634	10 51 167 1	32	8	6203401	568	99 38 560 14	1001	1
605601801	34	10 56 645 8	427	24	6204372	359	10 53 171 8	20	2
605604714	566	10 57 624 5	51	1	6205239	160	11 24 448 7	13	1
605604714	578	97 14 959 03	31	1	630120108	354	10 55 963 5	81	4

Item	Sheet	Assembly	Pos.	Quantity	Item	Sheet	Assembly	Pos.	Quantity
630121508	354	10 55 963 5	83	1	7013116	102	92 73 644	22	1
630122908	354	10 55 963 5	84	1	7013456	183	50 04 624	3	1
630160214	714	10 52 155 9	41	2	7014524	254	11 24 114 0	42	5
630170014	354	10 55 963 5	85	1	7014524	280	11 24 114 6	30	4.5
630170014	708	10 56 013 7	32	1	7016208	123	10 13 802 6	106	1
6905271	712	10 52 957 6	13	2	7016208	129	10 14 131 6	106	1
6905461	602	11 26 652 6	20	1	7019733	149	70 19 834	2	1
692815514	517	97 07 204 03	31	1	7019834	143	11 22 126 8	4	1
693003414	714	10 52 155 9	32	1	7020821	148	10 35 160 3	4	1
693003614	714	10 52 155 9	31	1	7022118	135	10 13 803 4	29	2
693013014	712	10 52 957 6	11	1	7022118	397	51 24 059 14	14	1
693013414	712	10 52 957 6	12	1	7023347	691	99 21 973 14	4	1
693030914	352	11 27 973 6	97	2	7024981	380	10 22 506 8	12	1
693061214	566	10 57 624 5	26	4	7024982	380	10 22 506 8	90	1
693061314	34	10 56 645 8	29	1	7024983	380	10 22 506 8	91	1
693061314	566	10 57 624 5	25	4	7024987	380	10 22 506 8	71	1
693061414	566	10 57 624 5	24	1	7024996	380	10 22 506 8	15	1
693061414	566	10 57 624 5	52	1	7025004	380	10 22 506 8	40	1
693061514	578	97 14 959 03	52	2	7025006	381	70 24 996	20	1
693061514	583	91 95 871 14	52	2	7025006	693	70 28 516	20	2
693061514	634	10 51 167 1	52	2	7025007	381	70 24 996	23	1
693067614	510	10 53 141 3	11	2	7025007	693	70 28 516	23	1
693073014	362	11 26 095 7	33	1	7025009	382	10 28 999 3	59	1
693073014	714	10 52 155 9	33	1	7025010	694	10 28 999 2	59	1
693113814	78	11 24 682 0	485	1	7025904	154	11 21 593 6	17	2
693126214	526	10 53 140 9	11	2	7025990	693	70 28 516	32	1
693138614	354	10 55 963 5	73	1	7025991	693	70 28 516	33	1
693148214	715	10 52 155 9	55	1	7025992	693	70 28 516	34	1
693149814	34	10 56 645 8	45	1	7027139	692	10 04 363 3	12	1
693152314	566	10 57 624 5	83	2	7027205	29	11 24 519 0	60	2
693155014	566	10 57 624 5	50	1	7027205	351	11 27 973 6	50	3
693155014	578	97 14 959 03	30	1	7027205	681	10 50 775 0	32	1
693155014	583	91 95 871 14	30	1	7027205	683	10 53 246 1	37	1
693155014	634	10 51 167 1	30	1	7027665	186	10 14 671 6	10	1
693157014	566	10 57 624 5	80	2	7027755	273	10 30 300 7	3	1
693157114	578	97 14 959 03	50	1	7027989	693	70 28 516	40	1
693157114	583	91 95 871 14	50	1	7028143	87	10 59 347 4	5	1
693157114	634	10 51 167 1	50	1	7028151	399	11 22 473 8	26	1
693168514	356	10 51 907 9	41	1	7028257	693	70 28 516	30	1
693181114	354	10 55 963 5	71	3	7028516	692	10 04 363 3	15	1
693182314	354	10 55 963 5	78	2	7029878	693	70 28 516	10	1
693183914	354	10 55 963 5	91	1	703003014	450	11 23 820 3	28	1
693208614	19	11 22 918 4	1	2	703003014	513	11 28 610 5	6	2
7000329	100	92 74 731	23	2	704214114	288	11 24 409 1	20	2
7001228	64	10 51 969 4	18	2	708014114	513	11 28 610 5	4	4
7002475	444	10 56 183 8	11	2	710004514	513	11 28 610 5	5	4
7004512	95	10 11 834 9	32	1	710020114	617	54 02 705 14	15	1
7004512	114	92 76 408	32	1	710031014	616	54 02 704 14	10	1
7004780	604	11 29 444 5	27	1	710069314	435	11 26 260 6	11	1
7005053	255	11 24 114 0	92	3	710069314	441	11 26 261 1	11	1
7005053	419	11 23 548 1	39	2	710069514	144	11 22 127 4	20	1
7005072	397	51 24 059 14	18	2	710069514	151	10 35 161 0	20	1
7006213	88	11 21 936 9	9	1	7101008	182	10 14 861 5	5	1
7007492	87	10 59 347 4	10	1	7101021	176	10 13 845 0	3	1
7008121	129	10 14 131 6	24	4	7101021	182	10 14 861 5	7	1
7008583	419	11 23 548 1	40	2	7101021	183	50 04 624	10	1
7009080	230	10 14 821 5	5	1	7101022	44	10 56 070 1	23	4
7011131	183	50 04 624	2	1	7101022	254	11 24 114 0	33	1
7012971	86	11 21 993 0	29	3	710102514	261	11 24 114 1	56	4
7012971	399	11 22 473 8	31	1	710103008	275	11 24 114 5	29	1

Item	Sheet	Assembly	Pos.	Quantity	Item	Sheet	Assembly	Pos.	Quantity
710103714	254	11 24 114 0	34	1	726922114	577	99 48 521 14	37	2
710103814	66	10 51 969 5	5	4	726922214	41	10 51 961 6	13	4
710104514	614	54 02 702 14	31	2	7361600	102	92 73 644	21	1
710121014	339	99 04 645 14	123	1	7361601	89	11 06 730 4	11	1
714000808	384	97 07 857 03	5	1	7361601	102	92 73 644	37	2
714000808	665	11 89 568 6	12	1	7362451	447	91 76 658 14	3	2.5
714001914	8	11 29 618 6	38	2	7362546	275	11 24 114 5	55	16
714001914	689	10 51 728 1	5	1	7362551	604	11 29 444 5	32	1
714002114	608	10 51 726 2	7	1	7363730	444	10 56 183 8	9	2
725810414	621	10 55 372 1	54	2	7364488	446	51 17 043 14	4	1
726054214	403	51 33 141 14	13	1	7364491	22	51 17 042 14	4	1
726054414	23	51 33 139 14	9	1	7365090	254	11 24 114 0	56	6
726206214	669	59 21 826 14	100	3	7365412	48	10 56 073 3	11	1
726306414	690	59 20 008 14	10	1	7365616	394	11 25 903 1	653	2
726307914	23	51 33 139 14	10	1	7366620	380	10 22 506 8	42	1
726308514	669	59 21 826 14	85	1	7367776	12	11 29 618 6	613	12
726401514	48	10 56 073 3	15	1	7367776	76	11 24 773 5	603	4
726403201	412	96 93 178 01	89	1	7367776	312	10 51 969 8	610	1
726403514	24	51 05 719 14	18	1	7367776	321	10 51 968 7	611	1
726404414	168	10 58 017 0	20	4	7367776	394	11 25 903 1	621	4
726408414	24	51 05 719 14	19	1	7367776	435	11 26 260 6	704	1
726409714	167	10 57 532 2	27	1	7367776	441	11 26 261 1	704	1
726409814	44	10 56 070 1	24	3	7367776	465	10 51 959 1	614	1
726410201	412	96 93 178 01	79	1	7367986	14	11 29 618 6	670	3
726411214	75	11 24 773 5	29	3	7368242	351	11 27 973 6	52	3
726411614	22	51 17 042 14	2	1	7368248	352	11 27 973 6	94	1
726411614	446	51 17 043 14	2	1	7370221	692	10 04 363 3	1	1
726424214	617	54 02 705 14	16	1	737022103	350	11 29 327 3	12	1
726428401	412	96 93 178 01	91	1	7370581	380	10 22 506 8	73	1
726428714	44	10 56 070 1	25	2	7370843	154	11 21 593 6	30	1
726429814	91	11 26 744 7	5	1	7371746	380	10 22 506 8	80	1
726431414	167	10 57 532 2	25	2	7371746	692	10 04 363 3	80	1
726431414	167	10 57 532 2	29	1	7373597	397	51 24 059 14	17	2
726450601	412	96 93 178 01	6	2	7380015	100	92 74 731	22	2
726456214	339	99 04 645 14	58	1	7380070	124	10 13 802 7	33	1
726456914	23	51 33 139 14	8	1	7380083	232	10 14 274 2	3	1
726456914	690	59 20 008 14	8	1	7380106	111	98 84 402	33	1
726459414	397	51 24 059 14	12	1	7380120	100	92 74 731	28	2
726461014	392	11 25 903 1	24	2	7380177	174	10 15 438 6	4	3
726461714	344	10 55 216 1	9	2	7380291	99	10 11 835 7	19	2
7264625	183	50 04 624	1	1	7380291	100	92 74 731	19	2
726464214	22	51 17 042 14	3	1	7380297	124	10 13 802 7	39	1
726464214	446	51 17 043 14	3	1	7380297	132	10 13 803 2	39	1
726468814	548	59 21 280 14	20	1	7380297	134	10 13 803 3	31	1
726469014	615	54 02 703 14	70	1	7380297	140	10 13 452 1	21	1
726611214	422	99 26 718 14	18	4	7380348	100	92 74 731	24	2
726612114	261	11 24 114 1	50	4	7380423	182	10 14 861 5	12	1
726612214	451	11 23 820 3	88	4	7380480	412	96 93 178 01	7	1
726612214	487	11 28 397 7	13	1	7380490	129	10 14 131 6	23	2
726612214	488	11 28 397 8	13	1	7380531	112	92 68 016	44	1
726612214	489	11 28 399 5	13	1	7380566	174	10 15 438 6	6	3
726612214	490	11 28 399 7	13	1	7380566	200	10 12 948 0	12	1
726613014	515	10 59 863 3	20	1	7380566	221	10 14 736 9	7	1
726613614	254	11 24 114 0	30	4	7380566	236	10 14 013 6	20	1
726616208	570	11 28 774 6	23	2	7380574	133	10 12 226 2	18	1
726616208	621	10 55 372 1	55	2	7380576	136	10 12 226 5	27	1
726616614	621	10 55 372 1	58	10	7380586	99	10 11 835 7	22	2
726902614	290	10 57 883 5	21	4	7380586	100	92 74 731	20	2
726904014	58	10 58 163 4	37	1	7380596	102	92 73 644	81	1
726910114	58	10 58 163 4	19	3	7380601	138	10 13 000 5	22	1

Item	Sheet	Assembly	Pos.	Quantity	Item	Sheet	Assembly	Pos.	Quantity
7380601	140	10 13 452 1	22	1	7381457	174	10 15 438 6	7	2
7380605	137	10 12 987 4	22	1	7381457	221	10 14 736 9	17	1
7380605	222	10 14 736 4	5	1	7381457	236	10 14 013 6	21	1
7380605	261	11 24 114 1	40	1	7381526	233	10 14 274 4	4	1
7380608	136	10 12 226 5	26	1	7381593	179	10 14 201 8	7	2
7380610	135	10 13 803 4	23	2	7381629	186	10 14 671 6	5	3
7380612	102	92 73 644	65	1	7381631	221	10 14 736 9	14	1
7380648	100	92 74 731	32	10	7381631	221	10 14 736 9	16	1
7380648	101	90 74 418	64	5	7381638	200	10 12 948 0	11	1
7380648	102	92 73 644	64	5	7381638	242	10 11 557 7	10	2
7380653	175	10 14 768 6	8	2	7381638	252	10 14 637 4	4	1
7380653	242	10 11 557 7	9	1	7381685	203	10 13 394 7	4	1
7380656	114	92 76 408	18	4	7381699	123	10 13 802 6	30	21
7380657	112	92 68 016	36	1	7381779	175	10 14 768 6	7	2
7380657	252	10 14 637 4	2	1	7382059	202	10 13 394 5	5	1
7380688	215	10 14 675 3	3	2	7382069	174	10 15 438 6	8	1
7380691	139	10 13 235 7	22	1	7382088	217	10 14 588 5	15	1
7380691	141	10 13 806 8	22	1	7382167	105	98 89 984	31	24
7380695	108	98 85 924	13	1	7382167	109	98 89 983	31	24
7380696	108	98 85 924	12	1	7382203	252	10 14 637 4	5	2
7380697	108	98 85 924	11	1	7382204	200	10 12 948 0	8	2
7380698	108	98 85 924	10	1	7382212	136	10 12 226 5	23	1
7380779	204	10 13 382 3	16	2	740000208	522	99 30 800 14	20	3
7380815	99	10 11 835 7	21	4	740000208	570	11 28 774 6	20	1
7380815	100	92 74 731	21	4	740000801	288	11 24 409 1	16	2.3
7380865	102	92 73 644	62	1	740000908	415	99 08 357 14	4	0.624
7380868	102	92 73 644	70	1	7402493	236	10 14 013 6	19	1
7380888	100	92 74 731	56	2	7402657	447	91 76 658 14	1	1
7380888	101	90 74 418	61	1	7402781	270	11 24 114 4	12	1
7380888	102	92 73 644	61	1	7403569	344	10 55 216 1	202	3
7380955	200	10 12 948 0	9	2	7404678	419	11 23 548 1	37	4
7380970	261	11 24 114 1	41	1	7407098	465	10 51 959 1	608	8
7380986	273	10 30 300 7	12	1	7407098	608	10 51 726 2	616	2
7380987	136	10 12 226 5	21	1	7407108	76	11 24 773 5	305	1
7381004	113	92 73 187	70	1	7407108	321	10 51 968 7	603	1
7381013	121	10 12 224 8	23	2	7407108	435	11 26 260 6	707	1
7381013	134	10 13 803 3	23	2	7407108	441	11 26 261 1	707	1
7381056	102	92 73 644	24	1	740732003	362	11 26 095 7	31	1
7381082	102	92 73 644	82	1	7409720	12	11 29 618 6	201	1
7381087	102	92 73 644	63	1	7409720	75	11 24 773 5	304	2
7381103	102	92 73 644	60	1	7409720	344	10 55 216 1	200	2
7381103	245	10 12 797 9	2	1	7410455	14	11 29 618 6	640	2
7381103	251	10 13 307 7	2	1	7410455	394	11 25 903 1	643	8
7381127	130	10 12 352 8	21	1	7412268	28	11 24 519 0	37	2
7381127	135	10 13 803 4	21	1	7412935	273	10 30 300 7	18	1
7381128	130	10 12 352 8	20	1	7412937	273	10 30 300 7	15	1
7381128	135	10 13 803 4	22	1	7412942	273	10 30 300 7	1	1
7381182	237	10 14 511 2	11	2	7413103	408	10 55 876 0	38	12
7381225	175	10 14 768 6	14	1	7413103	417	10 55 876 1	38	12
7381225	200	10 12 948 0	13	1	7414500	399	11 22 473 8	24	3
7381226	201	10 12 949 9	5	1	7415342	694	10 28 999 2	54	1
7381292	217	10 14 588 5	21	1	744010414	415	99 08 357 14	5	2
7381292	238	10 14 622 4	12	7	744011114	286	11 24 409 1	12	5
7381367	101	90 74 418	2	1	745120514	570	11 28 774 6	22	8
7381367	102	92 73 644	94	2	745120514	633	10 51 176 9	30	2
7381438	119	10 12 321 4	12	1	745120514	637	99 10 116 14	20	2
7381439	119	10 12 321 4	11	1	745128314	615	54 02 703 14	40	1
7381440	119	10 12 321 4	10	1	745141814	78	11 24 682 0	280	6
7381442	102	92 73 644	23	1	745194714	617	54 02 705 14	12	1
7381446	136	10 12 226 5	22	1	745906614	615	54 02 703 14	6	1

Item	Sheet	Assembly	Pos.	Quantity	Item	Sheet	Assembly	Pos.	Quantity
745907514	616	54 02 704 14	23	1	773400308	29	11 24 519 0	73	0.25
746171514	320	10 51 968 6	18	2	773400308	515	10 59 863 3	25	0.9
746225801	412	96 93 178 01	4	1	773400308	579	11 25 204 2	12	0.62
746509414	638	91 49 419 14	2	1	773400314	637	99 10 116 14	22	2
746911614	512	11 28 629 9	18	4	773920008	515	10 59 863 3	26	6
746913614	650	11 23 619 7	17	1	773920008	579	11 25 204 2	13	4
746923314	164	11 24 113 8	21	2	773930114	444	10 56 183 8	19	1
746925314	690	59 20 008 14	13	1	773930114	606	10 51 743 9	13	1
746925314	690	59 20 008 14	14	1	773931314	531	11 24 475 9	20	1
7469905	99	10 11 835 7	64	2	773935814	650	11 23 619 7	28	4
7469905	111	98 84 402	32	1	773939214	522	99 30 800 14	15	1
747460514	638	91 49 419 14	3	2	773941308	317	99 23 387 14	11	1
747462814	616	54 02 704 14	20	1	773947708	570	11 28 774 6	21	2
749073614	669	59 21 826 14	90	1	773954514	443	10 56 187 5	94	2
750001114	444	10 56 183 8	7	1	773954714	415	99 08 357 14	3	2
750001414	547	10 53 146 1	11	1	773959914	531	11 24 475 9	21	1
750003414	444	10 56 183 8	8	1	773967214	415	99 08 357 14	2	4
761001103	412	96 93 178 01	72	1	774204914	254	11 24 114 0	55	6
7610021	412	96 93 178 01	12	1	774204914	270	11 24 114 4	15	1
761008703	412	96 93 178 01	3	1	774204914	275	11 24 114 5	51	14
7610244	412	96 93 178 01	2	1	774206408	254	11 24 114 0	52	4
7615441	24	51 05 719 14	1	1	774209908	264	11 24 114 2	31	2
7615603	399	11 22 473 8	8	1	774212914	75	11 24 773 5	31	2
7615604	399	11 22 473 8	9	1	774214308	689	10 51 728 1	8	1
7615720	368	10 22 645 4	2	1	774217108	264	11 24 114 2	34	1
7617268	14	11 29 618 6	703	13	774218808	254	11 24 114 0	53	9
7617268	66	10 51 969 5	612	1	774241914	264	11 24 114 2	32	1
7617268	76	11 24 773 5	676	3	774247214	264	11 24 114 2	33	2
7617268	321	10 51 968 7	613	1	774255714	254	11 24 114 0	54	4
7617268	394	11 25 903 1	628	6	774256114	167	10 57 532 2	52	2
7617268	689	10 51 728 1	602	3	774259914	547	10 53 146 1	9	6
7617354	66	10 51 969 5	611	1	774301614	633	10 51 176 9	44	2
7617354	394	11 25 903 1	634	11	7743240	612	59 20 694 14	65	1
7617354	465	10 51 959 1	611	7	7743242	63	99 23 451 14	5	2
7617354	645	10 51 971 2	702	4	7743242	473	11 24 444 4	16	2
7617354	674	10 55 459 4	601	1	7743242	527	11 29 648 5	12	1
7617354	689	10 51 728 1	608	1	7743242	529	11 29 649 2	12	2
7617460	14	11 29 618 6	705	1	7743242	582	99 38 329 14	19	1
7617460	66	10 51 969 5	613	1	7743242	665	11 89 568 6	16	4
7617460	394	11 25 903 1	635	2	774730714	317	99 23 387 14	12	40
7617460	465	10 51 959 1	626	2	774760214	643	97 05 997 03	1	6
7617460	547	10 53 146 1	613	2	774760314	643	97 05 997 03	4	6
7617461	14	11 29 618 6	673	3	774760414	643	97 05 997 03	3	6
7617461	66	10 51 969 5	600	1	774760514	643	97 05 997 03	2	8
7617461	394	11 25 903 1	633	3	774762314	606	10 51 743 9	11	1
7617461	465	10 51 959 1	623	2	779002114	350	11 29 327 3	43	1
7617461	645	10 51 971 2	700	2	779006901	412	96 93 178 01	85	1
7617494	14	11 29 618 6	678	2	779013014	633	10 51 176 9	31	2
7617494	75	11 24 773 5	303	1	779014014	284	11 24 409 0	65	2
7617520	382	10 28 999 3	51	2	779016414	621	10 55 372 1	57	4
7621780	312	10 51 969 8	7	10	779016501	412	96 93 178 01	84	1
7622060	435	11 26 260 6	712	2	789011714	2	01 38 281 14	13	1
7622060	441	11 26 261 1	712	2	789038114	444	10 56 183 8	15	1
773193414	450	11 23 820 3	39	1	790036914	444	10 56 183 8	12	1
773193414	459	10 58 193 7	23	1	790042214	444	10 56 183 8	5	1
773194314	450	11 23 820 3	40	2	790042514	444	10 56 183 8	2	1
773195214	311	10 51 969 7	317	1	790042914	444	10 56 183 8	6	1
773195214	606	10 51 743 9	317	1	790202014	521	99 23 398 14	10	10
773195614	311	10 51 969 7	460	2	790202014	570	11 28 774 6	6	5
773195614	606	10 51 743 9	460	2	790202014	577	99 48 521 14	22	1

Item	Sheet	Assembly	Pos.	Quantity	Item	Sheet	Assembly	Pos.	Quantity
790202014	580	91 89 071 14	1	1	790550914	296	10 56 580 8	13	1
790202014	582	99 38 329 14	12	1	790563914	397	51 24 059 14	10	1
790202014	631	91 92 763 14	12	1	797027814	650	11 23 619 7	23	1
790208814	167	10 57 532 2	51	6	797029114	290	10 57 883 5	7	1
790212314	58	10 58 163 4	39	2	797029114	292	10 57 897 6	7	1
790227714	8	11 29 618 6	32	1	797029114	294	10 57 940 0	5	1
790230014	689	10 51 728 1	9	2	797029114	295	10 56 623 7	5	1
790230614	690	59 20 008 14	900	1	797029114	296	10 56 580 8	7	1
790244814	275	11 24 114 5	53	1	805090714	531	11 24 475 9	18	1
790246414	154	11 21 593 6	20	1	805091714	531	11 24 475 9	19	1
790259414	608	10 51 726 2	612	1	811205708	97	10 11 835 0	104	1
790269114	443	10 56 187 5	93	1	811205708	104	10 13 975 2	104	1
790282814	580	91 89 071 14	2	1	811205708	226	10 14 286 0	105	1
790295314	339	99 04 645 14	53	1	811208201	129	10 14 131 6	118	1
790295414	339	99 04 645 14	61	2	8627609	182	10 14 861 5	109	1
790297914	548	59 21 280 14	40	1	8655008	112	92 68 016	126	1
790306414	58	10 58 163 4	64	1	8655008	124	10 13 802 7	126	1
790311914	75	11 24 773 5	30	1	8655008	132	10 13 803 2	126	1
790346614	78	11 24 682 0	120	1	8655016	99	10 11 835 7	105	1
790347014	78	11 24 682 0	330	1	8655016	100	92 74 731	105	1
790347114	78	11 24 682 0	550	11	8655016	129	10 14 131 6	105	1
790347214	78	11 24 682 0	560	1	8655016	240	10 12 037 2	109	1
790365114	650	11 23 619 7	29	1	8655023	97	10 11 835 0	118	1
790380214	544	10 53 145 5	22	1	8655023	174	10 15 438 6	104	1
790386214	3	01 38 281 14	129	1	8655023	193	10 13 728 5	104	1
790400414	548	59 21 280 14	10	3	8655032	99	10 11 835 7	119	1
790400514	548	59 21 280 14	14	1	870000814	512	11 28 629 9	200	1
790400614	548	59 21 280 14	19	1	8700012	110	98 89 832	106	1
790400714	548	59 21 280 14	23	1	883203014	164	11 24 113 8	73	2
790401014	548	59 21 280 14	25	1	885040114	444	10 56 183 8	13	1
790401414	548	59 21 280 14	900	1	885045214	444	10 56 183 8	18	1
790403714	78	11 24 682 0	40	1	885380314	443	10 56 187 5	55	1
790403914	78	11 24 682 0	310	1	885391814	443	10 56 187 5	50	1
790407714	67	59 21 041 14	900	1	885392414	443	10 56 187 5	45	1
790407814	653	59 21 042 14	900	1	885400114	444	10 56 183 8	14	1
790411214	3	01 38 281 14	133	1	885602114	444	10 56 183 8	4	1
790422414	577	99 48 521 14	50	1	886002814	275	11 24 114 5	68	1.3
790444514	339	99 04 645 14	65	1	890035314	284	11 24 409 0	59	21
790453814	12	11 29 618 6	614	1	890045314	444	10 56 183 8	16	1
790453814	76	11 24 773 5	648	3	890063714	444	10 56 183 8	17	1
790487114	3	01 38 281 14	137	1	890100814	56	92 65 477 14	10	1
790512314	512	11 28 629 9	5	1	90013762	341	10 51 968 2	10	2
790512414	512	11 28 629 9	4	1	9072633	204	10 13 382 3	14	1
790512414	525	11 24 336 5	51	2	9072904	225	90 72 906	1	1
790517014	3	01 38 281 14	122	1	9072906	172	10 14 032 7	331	1
790517114	3	01 38 281 14	121	1	9072907	225	90 72 906	2	1
790519814	58	10 58 163 4	11	2	9072908	225	90 72 906	3	1
790523314	408	10 55 876 0	15	2	9072969	136	10 12 226 5	13	1
790523314	417	10 55 876 1	15	2	9073699	189	11 34 807 2	3	1
790538014	643	97 05 997 03	9	2	9073725	193	10 13 728 5	6	2
790549214	288	11 24 409 1	15	9	9073827	99	10 11 835 7	15	1
790549314	290	10 57 883 5	9	1	9074418	95	10 11 834 9	4	2
790549314	292	10 57 897 6	9	1	9074480	192	10 13 728 6	7	4
790549314	294	10 57 940 0	11	1	9074481	192	10 13 728 6	9	4
790549314	295	10 56 623 7	11	1	9074798	174	10 15 438 6	9	12
790549314	296	10 56 580 8	9	1	9074798	242	10 11 557 7	3	2
790550914	290	10 57 883 5	15	1	9075607	189	11 34 807 2	2	1
790550914	292	10 57 897 6	13	1	9075894	106	98 89 833	1	1
790550914	294	10 57 940 0	4	1	9075895	107	90 75 894	10	1
790550914	295	10 56 623 7	4	1	9076176	133	10 12 226 2	13	1

Item	Sheet	Assembly	Pos.	Quantity	Item	Sheet	Assembly	Pos.	Quantity
9076178	133	10 12 226 2	12	2	918539614	320	10 51 968 6	17	1
9076196	127	10 12 224 5	18	1	918585114	58	10 58 163 4	22	2
9076531	250	10 14 297 7	10	2	918591014	481	11 24 570 5	13	1
9076550	250	10 14 297 7	11	1	918591014	525	11 24 336 5	45	1
9076621	217	10 14 588 5	4	1	918591014	551	11 24 084 9	12	1
9077164	238	10 14 622 4	14	1	918591114	497	11 24 571 1	13	1
9077401	136	10 12 226 5	28	1	918591114	558	11 24 162 7	12	1
9077464	104	10 13 975 2	1	2	918678214	606	10 51 743 9	29	1
9077708	226	10 14 286 0	3	2	918684114	533	11 29 426 7	3	2
9078214	122	10 13 802 5	3	1	918684114	541	11 29 938 4	14	1
9078249	173	10 14 032 7	650	1	918803414	405	11 23 548 0	130	1
9078301	173	10 14 032 7	654	1	918803414	405	11 23 548 0	135	1
9078314	172	10 14 032 7	260	1	918803414	405	11 23 548 0	142	1
9079078	193	10 13 728 5	9	1	918803414	406	11 23 548 0	145	1
9079130	243	10 11 912 8	2	1	918805114	69	10 54 545 1	707	1
9079823	172	10 14 032 7	480	1	918810914	38	11 26 995 4	595	1
9079870	171	10 14 032 7	110	6	918819414	348	10 56 178 0	380	1
9080466	231	10 14 821 7	3	5	918820914	406	11 23 548 0	162	1
9080660	182	10 14 861 5	6	1	918849914	610	10 52 439 2	827	1
9080911	223	90 78 314	4	1	918870314	469	11 22 970 6	903	1
910353714	512	11 28 629 9	8	2	918870914	314	99 33 241 14	826	1
910362714	570	11 28 774 6	5	1	918873814	37	11 26 995 4	556	1
910362714	631	91 92 763 14	14	1	918874514	161	11 24 113 7	432	1
911108414	437	11 26 260 9	605	1	918882614	314	99 33 241 14	824	1
911247914	405	11 23 548 0	112	1	918907114	3	01 38 281 14	116	1
911247914	405	11 23 548 0	116	1	918975514	34	10 56 645 8	21	1
911256414	38	11 26 995 4	596	1	919014814	637	99 10 116 14	23	1
911292114	405	11 23 548 0	138	1	919017314	637	99 10 116 14	24	1
9140351	236	10 14 013 6	26	1	919022714	637	99 10 116 14	25	1
9144757	196	10 12 653 5	4	1	919023914	443	10 56 187 5	29	1
9144762	197	91 44 757	3	1	919058414	473	11 24 444 4	11	1
914690714	329	99 29 258 14	4	12	919075014	577	99 48 521 14	2	1
914690714	473	11 24 444 4	13	13	919126414	658	99 27 747 14	364	1
914757914	161	11 24 113 7	404	1	919126414	658	99 27 747 14	365	1
914762914	38	11 26 995 4	592	1	919127514	69	10 54 545 1	708	1
914763014	323	10 55 208 5	655	1	919140514	37	11 26 995 4	533	1
914792514	38	11 26 995 4	5022	1	919143414	161	11 24 113 7	421	1
914794514	37	11 26 995 4	575	1	919144714	663	11 24 779 0	181	1
914798914	37	11 26 995 4	551	1	919145114	716	11 28 825 7	805	1
914941914	637	99 10 116 14	13	4	919158314	405	11 23 548 0	113	1
915523714	521	99 23 398 14	12	1	919158314	405	11 23 548 0	117	1
915523714	533	11 29 426 7	5	9	919167714	161	11 24 113 7	422	1
915523714	541	11 29 938 4	11	7	919252814	455	10 53 044 6	31	1
915523714	637	99 10 116 14	12	1	919252814	526	10 53 140 9	31	1
916183314	451	11 23 820 3	78	1	919276314	3	01 38 281 14	598	1
916525114	351	11 27 973 6	31	1	919279914	521	99 23 398 14	11	3
916526414	167	10 57 532 2	13	1	919279914	533	11 29 426 7	4	1
916793914	62	10 56 069 4	1	2	919279914	541	11 29 938 4	12	1
917585714	354	10 55 963 5	51	1	919279914	631	91 92 763 14	10	2
917665814	443	10 56 187 5	31	1	919279914	633	10 51 176 9	32	2
9177947	167	10 57 532 2	28	1	919421714	639	99 23 405 14	8	2
917906414	674	10 55 459 4	3	1	919587114	582	99 38 329 14	3	1
917906414	689	10 51 728 1	4	1	919590114	544	10 53 145 5	10	1
918245214	37	11 26 995 4	572	1	919590214	544	10 53 145 5	11	1
918248414	647	11 22 970 9	280	1	919617914	513	11 28 610 5	1	2
918269214	161	11 24 113 7	430	1	919706714	36	11 26 995 4	527	1
918272514	405	11 23 548 0	127	1	919714914	38	11 26 995 4	581	1
918285814	38	11 26 995 4	598	1	919735014	36	11 26 995 4	524	1
918361414	566	10 57 624 5	41	1	919736714	663	11 24 779 0	185	1
918365114	29	11 24 519 0	91	1	919736714	663	11 24 779 0	186	1

Item	Sheet	Assembly	Pos.	Quantity	Item	Sheet	Assembly	Pos.	Quantity
919757114	442	11 26 261 2	635	1	928137514	405	11 23 548 0	122	1
919778814	469	11 22 970 6	902	1	928137714	69	10 54 545 1	702	1
919791614	69	10 54 545 1	706	1	928152414	405	11 23 548 0	118	1
919916514	533	11 29 426 7	8	2	928166714	469	11 22 970 6	909	1
919956014	512	11 28 629 9	2	2	928166714	469	11 22 970 6	913	1
919956114	512	11 28 629 9	3	2	928169614	406	11 23 548 0	151	1
926547714	55	10 57 884 5	10	1	928169614	406	11 23 548 0	159	1
9266680	99	10 11 835 7	18	2	928183014	36	11 26 995 4	506	1
9266847	184	10 14 591 9	1	1	928204714	647	11 22 970 9	278	1
9267340	98	92 67 343	10	1	928209814	405	11 23 548 0	102	1
9267341	98	92 67 343	11	1	928209814	405	11 23 548 0	107	1
9267342	98	92 67 343	12	1	928266514	161	11 24 113 7	403	1
9267343	97	10 11 835 0	6	2	928272714	161	11 24 113 7	411	1
9268016	96	10 11 834 9	96	1	928293114	405	11 23 548 0	133	1
9268016	114	92 76 408	96	1	928293114	405	11 23 548 0	134	1
9268423	95	10 11 834 9	13	1	928318214	458	11 23 239 9	802	1
9268441	102	92 73 644	8	3	928318214	458	11 23 239 9	807	1
9268441	129	10 14 131 6	8	5	928326514	314	99 33 241 14	825	1
9268441	135	10 13 803 4	8	5	928348514	549	10 53 147 2	201	1
9269136	107	90 75 894	11	9	928357214	38	11 26 995 4	585	1
9271340	221	10 14 736 9	13	1	928443714	36	11 26 995 4	522	1
9273187	96	10 11 834 9	97	1	928445414	37	11 26 995 4	536	1
9273271	205	10 14 294 2	2	2	928456714	36	11 26 995 4	526	1
9273644	95	10 11 834 9	89	1	928461114	36	11 26 995 4	525	1
9273644	101	90 74 418	90	1	928536514	437	11 26 260 9	606	1
9274731	97	10 11 835 0	91	1	928538414	69	10 54 545 1	704	1
9275003	99	10 11 835 7	20	8	928538414	405	11 23 548 0	139	1
927521808	566	10 57 624 5	30	2	928589814	161	11 24 113 7	431	1
927521808	578	97 14 959 03	36	1	928591114	69	10 54 545 1	703	1
927521808	583	91 95 871 14	36	1	928611014	162	11 24 113 7	435	1
927521808	634	10 51 167 1	36	1	928619114	658	99 27 747 14	360	1
9275428	102	92 73 644	76	1	928712614	38	11 26 995 4	597	1
9275443	95	10 11 834 9	85	1	928763814	469	11 22 970 6	908	1
9276385	95	10 11 834 9	11	1	928763814	469	11 22 970 6	912	1
9276408	96	10 11 834 9	98	1	928764814	37	11 26 995 4	548	1
9276860	95	10 11 834 9	37	2	928765014	36	11 26 995 4	508	1
9276860	114	92 76 408	37	2	928815314	445	91 90 239 14	295	1
928003714	406	11 23 548 0	163	1	928857314	161	11 24 113 7	407	1
928009314	161	11 24 113 7	428	1	928861314	314	99 33 241 14	823	1
928010214	36	11 26 995 4	511	1	928861414	40	11 23 110 9	824	1
928010214	36	11 26 995 4	512	1	928865914	406	11 23 548 0	154	1
928010214	36	11 26 995 4	513	1	928865914	406	11 23 548 0	158	1
928010214	36	11 26 995 4	514	1	928868414	161	11 24 113 7	418	1
928014714	469	11 22 970 6	904	1	928872514	405	11 23 548 0	103	1
928020314	37	11 26 995 4	546	1	928872814	405	11 23 548 0	108	1
928029714	469	11 22 970 6	906	1	928880614	161	11 24 113 7	427	1
928029714	469	11 22 970 6	914	1	928885614	37	11 26 995 4	559	1
928032214	37	11 26 995 4	547	1	928950414	323	10 55 208 5	656	1
928044014	348	10 56 178 0	390	1	928952714	161	11 24 113 7	420	1
928110014	38	11 26 995 4	584	1	928973314	406	11 23 548 0	150	1
928113314	348	10 56 178 0	381	1	928973314	406	11 23 548 0	156	1
928121514	469	11 22 970 6	917	1	929376814	69	10 54 545 1	705	1
928123014	38	11 26 995 4	580	1	929381114	161	11 24 113 7	415	1
928127314	405	11 23 548 0	131	1	929390914	405	11 23 548 0	132	1
928127314	405	11 23 548 0	136	1	929390914	405	11 23 548 0	137	1
928127314	406	11 23 548 0	143	1	929399714	406	11 23 548 0	166	1
928127314	406	11 23 548 0	144	1	929414814	37	11 26 995 4	555	1
928130914	271	11 24 972 9	800	1	929443814	610	10 52 439 2	828	1
928130914	271	11 24 972 9	801	1	929459114	40	11 23 110 9	823	1
928135714	40	11 23 110 9	822	1	929467714	406	11 23 548 0	153	1

Item	Sheet	Assembly	Pos.	Quantity	Item	Sheet	Assembly	Pos.	Quantity
929467714	406	11 23 548 0	157	1	949352914	329	99 29 258 14	12	4
929473314	38	11 26 995 4	582	1	949389914	473	11 24 444 4	12	2
929491914	40	11 23 110 9	825	1	949401114	302	11 24 483 7	16	1
929796914	608	10 51 726 2	6	1	949721314	533	11 29 426 7	21	5
933675501	315	96 96 248 01	980	1	949721314	541	11 29 938 4	28	2
934756014	582	99 38 329 14	20	1	949724114	521	99 23 398 14	23	2
939662601	450	11 23 820 3	26	1	949740514	64	10 51 969 4	15	20
942264714	44	10 56 070 1	21	2	949740614	637	99 10 116 14	11	10
942430914	39	99 14 627 14	31	4	949740814	533	11 29 426 7	22	1
942594714	637	99 10 116 14	26	2	949740914	533	11 29 426 7	24	1
942804914	577	99 48 521 14	10	2	949740914	541	11 29 938 4	22	1
942976214	535	99 26 359 14	21	2	949741014	533	11 29 426 7	25	4
942976214	571	99 26 362 14	21	2	949741114	533	11 29 426 7	30	1
943958914	8	11 29 618 6	30	1	949741314	533	11 29 426 7	31	1
943958914	453	10 51 826 1	5	1	949742714	533	11 29 426 7	32	4
943958914	547	10 53 146 1	5	1	949748414	533	11 29 426 7	23	2
944137814	75	11 24 773 5	24	1	949748414	541	11 29 938 4	23	1
9443784	412	96 93 178 01	40	1	949752814	541	11 29 938 4	24	2
944378903	412	96 93 178 01	60	1	949752914	541	11 29 938 4	18	2
944403703	412	96 93 178 01	8	1	949758314	302	11 24 483 7	24	1
944403803	412	96 93 178 01	10	1	949886314	528	11 28 852 3	10	1
944403903	412	96 93 178 01	15	1	949886314	633	10 51 176 9	33	4
944404303	412	96 93 178 01	18	5	949892214	320	10 51 968 6	20	1
944404503	412	96 93 178 01	20	1	949910614	501	91 85 911 14	4	2
944404603	412	96 93 178 01	25	1	949910614	507	99 03 609 14	4	4
944404803	412	96 93 178 01	28	3	949910614	571	99 26 362 14	10	2
944405203	412	96 93 178 01	30	1	949910714	493	91 85 910 14	4	2
944405903	412	96 93 178 01	70	1	949910714	535	99 26 359 14	11	2
944406203	412	96 93 178 01	75	1	949910714	571	99 26 362 14	11	2
944406403	412	96 93 178 01	35	1	949911014	493	91 85 910 14	5	4
944406503	412	96 93 178 01	38	3	949911014	512	11 28 629 9	7	4
944406703	412	96 93 178 01	65	1	949911014	535	99 26 359 14	15	8
944434703	412	96 93 178 01	48	3	949911014	571	99 26 362 14	12	4
944434903	412	96 93 178 01	50	1	949912814	542	10 59 968 1	10	2
944672614	10	11 29 618 6	42	1	949940914	570	11 28 774 6	12	2
944813514	75	11 24 773 5	25	1	949942814	493	91 85 910 14	7	8
945877814	637	99 10 116 14	37	2	949942814	501	91 85 911 14	7	8
945877814	640	99 10 125 14	3	1	949942814	507	99 03 609 14	7	16
945877814	642	99 06 789 14	3	1	949942814	512	11 28 629 9	39	4
945931614	535	99 26 359 14	20	4	949942814	571	99 26 362 14	17	20
946293614	8	11 29 618 6	9	1	949943614	570	11 28 774 6	14	1
947037314	638	91 49 419 14	1	1	949944514	570	11 28 774 6	13	2
9477429	104	10 13 975 2	18	1	949946714	512	11 28 629 9	13	2
9477439	97	10 11 835 0	13	2	949982414	535	99 26 359 14	23	2
948282314	60	10 56 067 3	6	1	949982414	571	99 26 362 14	20	2
948545514	637	99 10 116 14	39	2	949988214	521	99 23 398 14	19	2
948773814	475	99 14 137 14	5	16	950102914	522	99 30 800 14	16	1
948959414	577	99 48 521 14	31	4	950113314	535	99 26 359 14	16	2
948967314	516	11 28 357 6	3	4	950143914	521	99 23 398 14	37	2
949174814	577	99 48 521 14	26	2	950161014	533	11 29 426 7	6	2
949196514	329	99 29 258 14	8	2	950275414	571	99 26 362 14	13	4
949196614	493	91 85 910 14	3	4	950285614	527	11 29 648 5	11	1
949196614	501	91 85 911 14	3	4	950287214	533	11 29 426 7	7	1
949196614	507	99 03 609 14	3	8	950290614	529	11 29 649 2	10	1
949196614	535	99 26 359 14	22	8	950298014	533	11 29 426 7	15	4
949196614	542	10 59 968 1	15	4	950298014	541	11 29 938 4	13	4
949196614	571	99 26 362 14	16	8	950343514	550	99 31 679 14	5	1
949341514	10	11 29 618 6	45	1	950361114	542	10 59 968 1	14	4
949351814	641	99 23 420 14	5	4	950365014	542	10 59 968 1	16	4
949351814	650	11 23 619 7	10	1	950387314	621	10 55 372 1	59	10

Item	Sheet	Assembly	Pos.	Quantity	Item	Sheet	Assembly	Pos.	Quantity
950490414	487	11 28 397 7	11	1	956385814	275	11 24 114 5	45	2
950490414	488	11 28 397 8	11	1	956385814	604	11 29 444 5	35	2
950562214	537	99 35 031 14	10	2	956507814	676	11 23 626 6	10	1
950562414	537	99 35 031 14	11	1	956536214	633	10 51 176 9	37	2
950563214	525	11 24 336 5	17	1	956627714	570	11 28 774 6	17	1
950581614	450	11 23 820 3	11	4	956648114	582	99 38 329 14	44	1
950581614	483	11 28 726 4	10	1	956711314	644	10 51 971 3	23	8
950610714	648	99 35 606 14	10	2	956802414	521	99 23 398 14	13	1
950663614	64	10 51 969 4	17	2	956802514	521	99 23 398 14	14	1
950735414	582	99 38 329 14	13	2	956803214	521	99 23 398 14	32	2
950735514	582	99 38 329 14	36	2	956803414	521	99 23 398 14	16	2
950735614	582	99 38 329 14	38	1	956803514	521	99 23 398 14	24	2
950735714	582	99 38 329 14	40	2	956803714	521	99 23 398 14	25	2
950735914	582	99 38 329 14	18	1	956805314	521	99 23 398 14	17	2
950840114	582	99 38 329 14	46	1	956805414	521	99 23 398 14	18	2
951577814	533	11 29 426 7	12	1	956809314	521	99 23 398 14	36	2
953305103	637	99 10 116 14	27	1	956809514	521	99 23 398 14	21	1
953431703	633	10 51 176 9	35	1	956810314	521	99 23 398 14	26	1
953431803	635	95 34 317 03	3	2	956814114	542	10 59 968 1	13	4
953431903	635	95 34 317 03	2	4	956847814	513	11 28 610 5	2	2
953432003	635	95 34 317 03	1	1	956856614	529	11 29 649 2	11	1
953466003	168	10 58 017 0	10	1	956858014	570	11 28 774 6	45	3
953580303	388	99 18 041 14	10	1	956859714	639	99 23 405 14	4	4
954229003	304	11 24 483 7	101	1	956929614	544	10 53 145 5	14	2
954372503	419	11 23 548 1	14	4	957104314	633	10 51 176 9	38	1
954373603	408	10 55 876 0	31	2	957104414	633	10 51 176 9	11	2
954373603	417	10 55 876 1	31	2	957104814	633	10 51 176 9	39	1
954398703	6	11 24 047 9	60	2	957140114	541	11 29 938 4	25	2
954398803	512	11 28 629 9	15	2	957261514	582	99 38 329 14	14	1
954432003	424	11 22 050 0	17	10	957261514	633	10 51 176 9	41	1
954432003	439	11 22 050 1	17	10	957336914	512	11 28 629 9	17	1
954485303	304	11 24 483 7	64	1	957511614	541	11 29 938 4	16	1
954486503	424	11 22 050 0	18	6	957563914	544	10 53 145 5	15	2
954486503	439	11 22 050 1	18	6	957714914	533	11 29 426 7	13	1
954560603	459	10 58 193 7	15	2	957831614	308	10 52 656 0	10	4
954584908	408	10 55 876 0	17	144	957896414	542	10 59 968 1	17	4
954584908	417	10 55 876 1	17	144	957900214	582	99 38 329 14	35	16
954598503	302	11 24 483 7	12	2	958097914	422	99 26 718 14	10	2
954598503	311	10 51 969 7	13	1	958145214	501	91 85 911 14	5	4
956009714	302	11 24 483 7	10	1	958145214	507	99 03 609 14	5	8
956009714	450	11 23 820 3	35	2	958214314	516	11 28 357 6	2	1
956009714	484	11 28 725 5	11	2	958281314	535	99 26 359 14	14	4
956033214	513	11 28 610 5	3	2	958281314	571	99 26 362 14	19	4
956047514	388	99 18 041 14	11	2	958471514	290	10 57 883 5	17	1
956049414	637	99 10 116 14	21	4	958471514	292	10 57 897 6	17	1
956064714	577	99 48 521 14	7	2	958471514	294	10 57 940 0	6	1
956067414	577	99 48 521 14	5	2	958471514	295	10 56 623 7	6	1
956067614	577	99 48 521 14	3	1	958471514	296	10 56 580 8	14	1
956070214	577	99 48 521 14	9	1	958471614	290	10 57 883 5	18	1
956070514	577	99 48 521 14	4	2	958471614	292	10 57 897 6	18	1
956070614	577	99 48 521 14	6	2	958471614	294	10 57 940 0	7	1
956092714	577	99 48 521 14	25	2	958471614	295	10 56 623 7	7	1
956213814	521	99 23 398 14	22	1	958471614	296	10 56 580 8	15	1
956215014	544	10 53 145 5	13	4	958478414	284	11 24 409 0	56	2
956247414	633	10 51 176 9	36	1	958478414	298	10 54 591 0	10	10
956274314	8	11 29 618 6	28	4	958478414	422	99 26 718 14	15	4
956319314	577	99 48 521 14	30	4	958478414	624	11 24 575 5	5	2
956374714	582	99 38 329 14	31	2	958908914	459	10 58 193 7	17	1
956374914	582	99 38 329 14	26	1	959001414	329	99 29 258 14	10	1
956378214	450	11 23 820 3	27	2	959019014	47	10 56 073 2	11	3

Item	Sheet	Assembly	Pos.	Quantity	Item	Sheet	Assembly	Pos.	Quantity
959332514	451	11 23 820 3	90	1	970855603	475	99 14 137 14	6	2
959465714	282	11 24 409 0	38	2	970857103	282	11 24 409 0	32	1
959476014	570	11 28 774 6	7	2	970859103	473	11 24 444 4	40	4
959476114	570	11 28 774 6	19	2	970883003	302	11 24 483 7	27	2
959483514	570	11 28 774 6	3	1	970901603	637	99 10 116 14	14	2
959571914	644	10 51 971 3	14	2	970961303	570	11 28 774 6	16	4
959575714	460	99 30 060 14	12	4	970961303	582	99 38 329 14	23	4
959575714	492	99 24 404 14	12	4	970961303	637	99 10 116 14	19	1
959575714	500	99 24 405 14	12	4	971216403	541	11 29 938 4	44	2
959575714	506	99 24 406 14	12	8	971230303	621	10 55 372 1	60	10
959575714	519	99 24 594 14	12	4	971303203	450	11 23 820 3	34	1
959575714	582	99 38 329 14	39	2	971303203	484	11 28 725 5	10	1
959576314	368	10 22 645 4	100	1	971304903	415	99 08 357 14	1	2
959643514	512	11 28 629 9	11	4	971323803	637	99 10 116 14	28	1
959712214	63	99 23 451 14	1	2	971333403	408	10 55 876 0	13	1
959712714	706	10 52 293 0	21	1	971333403	417	10 55 876 1	13	1
959799614	644	10 51 971 3	27	8	971333503	408	10 55 876 0	20	3
959835714	671	11 89 568 8	14	4	971333503	417	10 55 876 1	20	3
959841114	473	11 24 444 4	39	4	971361703	320	10 51 968 6	19	1
959841814	473	11 24 444 4	25	2	971363403	451	11 23 820 3	93	1
959866614	329	99 29 258 14	7	1	971460103	4	01 38 281 14	651	1
959869314	329	99 29 258 14	3	3	971495903	577	99 48 521 14	29	1
959912014	309	99 29 803 14	11	6	971508203	574	10 55 753 7	10	1
959912114	309	99 29 803 14	12	6	971508203	577	99 48 521 14	11	1
959912214	309	99 29 803 14	13	6	971508203	633	10 51 176 9	43	1
959912514	309	99 29 803 14	15	12	971511703	575	10 55 757 6	10	1
959912614	309	99 29 803 14	16	6	979896808	268	11 24 114 3	30	2
959912714	309	99 29 803 14	17	6	981809914	4	01 38 281 14	999	1
959921514	476	99 26 417 14	12	8	981953714	4	01 38 281 14	992	1
959921514	519	99 24 594 14	17	4	981967114	609	51 02 322 14	990	1
964450414	547	10 53 146 1	14	1	9874345	6	11 24 047 9	12	1
966429214	582	99 38 329 14	28	1	9881114	99	10 11 835 7	33	2
967216103	606	10 51 743 9	14	2	9881609	129	10 14 131 6	7	2
967216303	611	96 72 161 03	2	1	9881609	134	10 13 803 3	8	2
967217003	611	96 72 161 03	1	1	9881609	135	10 13 803 4	7	2
967313703	302	11 24 483 7	25	1	9882207	95	10 11 834 9	15	2
967559503	570	11 28 774 6	11	2	9882207	114	92 76 408	15	2
968523914	58	10 58 163 4	27	1	9884402	96	10 11 834 9	95	1
969317801	408	10 55 876 0	6	1	9885628	112	92 68 016	17	1
969317801	417	10 55 876 1	6	1	9885660	97	10 11 835 0	16	2
969329314	8	11 29 618 6	40	1	9885661	97	10 11 835 0	17	2
969392201	412	96 93 178 01	45	1	9885924	105	98 89 984	39	1
969624801	311	10 51 969 7	10	1	9885924	109	98 89 983	39	1
969641401	316	96 96 543 01	40	1	9885937	123	10 13 802 6	29	1
969641501	316	96 96 543 01	50	1	9886591	200	10 12 948 0	6	1
969654301	315	96 96 248 01	20	1	9886756	200	10 12 948 0	7	1
970535203	633	10 51 176 9	42	2	9887035	106	98 89 833	2	1
970553303	533	11 29 426 7	29	1	9887828	97	10 11 835 0	14	2
970553303	541	11 29 938 4	19	1	9887948	126	10 14 360 7	14	2
970588503	6	11 24 047 9	61	2	9888133	104	10 13 975 2	19	1
970591503	641	99 23 420 14	1	4	9889809	104	10 13 975 2	15	1
970599703	3	01 38 281 14	619	1	9889809	105	98 89 984	15	1
970720403	514	99 06 461 14	970	1	9889809	109	98 89 983	15	1
970726703	424	11 22 050 0	19	4	9889831	105	98 89 984	1	9
970726703	439	11 22 050 1	19	4	9889831	109	98 89 983	1	1
970785703	350	11 29 327 3	44	1	9889832	109	98 89 983	2	1
970827603	329	99 29 258 14	9	1	9889833	105	98 89 984	2	1
970831503	450	11 23 820 3	14	2	9889977	95	10 11 834 9	93	1
970854303	512	11 28 629 9	16	2	9889983	96	10 11 834 9	94	1
970854303	525	11 24 336 5	53	2	9889984	95	10 11 834 9	92	1

Item	Sheet	Assembly	Pos.	Quantity	Item	Sheet	Assembly	Pos.	Quantity
9889988	105	98 89 984	14	1	991547014	161	11 24 113 7	419	1
9889988	109	98 89 983	14	1	991563114	458	11 23 239 9	812	1
990038114	38	11 26 995 4	583	1	991563114	458	11 23 239 9	817	1
990053014	161	11 24 113 7	408	1	991587514	37	11 26 995 4	552	1
990055814	658	99 27 747 14	361	1	991606114	6	11 24 047 9	63	1
990055914	658	99 27 747 14	362	1	991804114	387	10 51 969 6	13	1
990360914	503	11 24 571 7	13	1	991867414	8	11 29 618 6	37	1
990360914	561	11 24 163 1	12	1	991873614	473	11 24 444 4	43	4
990443514	290	10 57 883 5	8	2	991964414	161	11 24 113 7	406	1
990443514	292	10 57 897 6	8	2	992081114	354	10 55 963 5	56	1
990443514	294	10 57 940 0	3	2	992147314	691	99 21 973 14	3	1
990443514	295	10 56 623 7	3	2	992197314	4	01 38 281 14	721	1
990443514	296	10 56 580 8	8	2	992258514	37	11 26 995 4	569	1
990464514	337	99 04 941 14	10	1	992261314	37	11 26 995 4	577	1
990494114	318	10 51 969 1	2	1	992261414	36	11 26 995 4	520	1
990627014	515	10 59 863 3	23	1	992273614	663	11 24 779 0	180	1
990646114	509	11 24 132 4	13	1	992296514	647	11 22 970 9	279	1
990646114	564	11 24 263 6	12	1	992298714	38	11 26 995 4	591	1
990678714	642	99 06 789 14	1	1	992338614	2	01 38 281 14	18	1
990678814	642	99 06 789 14	2	1	992338714	2	01 38 281 14	24	1
990678914	641	99 23 420 14	2	4	992338914	2	01 38 281 14	38	1
990706901	51	10 51 963 1	10	1	992339814	3	01 38 281 14	82	1
990759714	671	11 89 568 8	12	4	992340514	3	01 38 281 14	616	1
990835714	408	10 55 876 0	40	1	992342014	3	01 38 281 14	617	1
990835714	417	10 55 876 1	40	1	992345114	6	11 24 047 9	50	1
990870614	3	01 38 281 14	555	1	992387314	570	11 28 774 6	1	1
990870614	6	11 24 047 9	40	1	992403814	550	99 31 679 14	3	1
990954814	450	11 23 820 3	31	2	992415314	628	99 24 978 14	10	1
991011614	3	01 38 281 14	605	1	992440414	481	11 24 570 5	12	1
991011714	637	99 10 116 14	10	1	992440514	497	11 24 571 1	12	1
991011914	637	99 10 116 14	40	2	992440614	503	11 24 571 7	12	1
991012214	637	99 10 116 14	41	2	992459414	509	11 24 132 4	14	1
991012214	640	99 10 125 14	2	1	992497814	627	11 21 529 8	17	1
991012514	639	99 23 405 14	2	4	992504214	458	11 23 239 9	813	1
991012614	640	99 10 125 14	1	1	992511514	437	11 26 260 9	604	1
991109014	647	11 22 970 9	282	1	992519014	38	11 26 995 4	594	1
991109014	647	11 22 970 9	283	1	992552014	348	10 56 178 0	389	1
991139814	161	11 24 113 7	401	1	992561114	549	10 53 147 2	203	1
991168714	36	11 26 995 4	509	1	992569114	37	11 26 995 4	557	1
991170814	323	10 55 208 5	652	1	992635914	531	11 24 475 9	12	1
991195514	610	10 52 439 2	367	1	992636214	564	11 24 263 6	13	1
991198814	458	11 23 239 9	810	1	992641714	471	11 23 937 8	11	1
991198814	458	11 23 239 9	811	1	992671814	421	99 23 389 14	1	2
991205314	610	10 52 439 2	364	1	992741214	307	99 27 572 14	10	1
991209514	38	11 26 995 4	5020	1	992751514	644	10 51 971 3	18	2
991242714	469	11 22 970 6	915	1	992757214	306	99 23 386 14	10	1
991253814	38	11 26 995 4	579	1	992757514	308	10 52 656 0	11	4
991285814	469	11 22 970 6	918	1	992774714	650	11 23 619 7	4	1
991312114	406	11 23 548 0	152	1	992835314	161	11 24 113 7	400	1
991312114	406	11 23 548 0	155	1	992837314	658	99 27 747 14	367	1
991362714	40	11 23 110 9	826	1	992857714	658	99 27 747 14	366	1
991375814	38	11 26 995 4	587	1	992879314	442	11 26 261 2	634	1
991384314	348	10 56 178 0	388	1	992893114	458	11 23 239 9	803	1
991390514	37	11 26 995 4	570	1	992921714	408	10 55 876 0	29	2
991391814	437	11 26 260 9	602	1	992921714	417	10 55 876 1	29	2
991413714	473	11 24 444 4	32	1	992925814	320	10 51 968 6	11	1
991413814	475	99 14 137 14	1	1	992925914	320	10 51 968 6	12	1
991462714	6	11 24 047 9	13	1	992938614	331	99 33 537 14	4	1
991487414	8	11 29 618 6	26	1	992938814	331	99 33 537 14	3	4
991528514	38	11 26 995 4	586	1	992938914	331	99 33 537 14	1	1

Item	Sheet	Assembly	Pos.	Quantity	Item	Sheet	Assembly	Pos.	Quantity
992939214	331	99 33 537 14	2	1	995027514	37	11 26 995 4	532	1
992943414	331	99 33 537 14	5	1	995060114	36	11 26 995 4	521	1
992958814	478	11 28 594 7	10	4	995082614	348	10 56 178 0	382	1
992958814	496	11 28 619 1	10	6	995174014	469	11 22 970 6	905	1
992958814	502	11 28 653 4	10	6	995175314	647	11 22 970 9	281	1
992980314	306	99 23 386 14	13	1	995176314	37	11 26 995 4	538	1
992982314	309	99 29 803 14	14	6	995180714	161	11 24 113 7	416	1
993006014	450	11 23 820 3	57	1	995207914	37	11 26 995 4	540	1
993034714	639	99 23 405 14	1	4	995219914	405	11 23 548 0	140	1
993080014	521	99 23 398 14	15	2	995226814	663	11 24 779 0	184	1
993081414	535	99 26 359 14	10	2	995226814	663	11 24 779 0	187	1
993081514	535	99 26 359 14	12	1	995240114	406	11 23 548 0	167	1
993118114	633	10 51 176 9	10	1	995263914	161	11 24 113 7	425	1
993167914	544	10 53 145 5	12	1	995264214	37	11 26 995 4	566	1
993191014	533	11 29 426 7	2	1	995285414	610	10 52 439 2	361	1
993204614	405	11 23 548 0	104	1	995421014	161	11 24 113 7	402	1
993204614	405	11 23 548 0	109	1	995437214	405	11 23 548 0	119	1
993213714	323	10 55 208 5	653	1	995440614	37	11 26 995 4	576	1
993226114	458	11 23 239 9	800	1	995550714	161	11 24 113 7	429	1
993226114	458	11 23 239 9	801	1	995830614	711	10 57 089 4	804	1
993227714	675	10 53 635 2	650	1	995865114	469	11 22 970 6	907	1
993249414	549	10 53 147 2	200	1	995865114	469	11 22 970 6	911	1
993249514	549	10 53 147 2	202	1	995943114	437	11 26 260 9	600	1
993317814	550	99 31 679 14	4	1	995943514	437	11 26 260 9	619	1
993324114	311	10 51 969 7	4	1	995943614	437	11 26 260 9	620	1
993334214	525	11 24 336 5	36	2	995943714	442	11 26 261 2	628	1
993352014	621	10 55 372 1	53	8	995943814	442	11 26 261 2	629	1
993353714	330	99 29 259 14	1	1	995944014	442	11 26 261 2	631	1
993419814	451	11 23 820 3	80	2	995944114	442	11 26 261 2	632	1
993503114	531	11 24 475 9	15	1	995944214	348	10 56 178 0	384	1
993522914	521	99 23 398 14	20	1	995944314	348	10 56 178 0	387	1
993560614	644	10 51 971 3	26	4	995944414	348	10 56 178 0	391	1
993584114	633	10 51 176 9	45	1	995951214	348	10 56 178 0	392	1
993623814	314	99 33 241 14	822	1	995951314	323	10 55 208 5	650	1
993643514	161	11 24 113 7	409	1	995951414	323	10 55 208 5	651	1
993657714	36	11 26 995 4	516	1	995959114	469	11 22 970 6	916	1
993685614	442	11 26 261 2	633	1	995961914	161	11 24 113 7	424	1
993734014	37	11 26 995 4	535	1	995962014	161	11 24 113 7	426	1
993751514	323	10 55 208 5	654	1	995972114	36	11 26 995 4	500	1
993758914	663	11 24 779 0	182	1	995972214	36	11 26 995 4	501	1
993758914	663	11 24 779 0	183	1	995972314	36	11 26 995 4	502	1
993758914	663	11 24 779 0	188	1	995972414	36	11 26 995 4	503	1
993758914	663	11 24 779 0	189	1	995972514	36	11 26 995 4	504	1
993759614	675	10 53 635 2	651	1	995972614	36	11 26 995 4	505	1
993774614	37	11 26 995 4	537	1	995972814	36	11 26 995 4	510	1
993775014	38	11 26 995 4	5021	1	995972914	36	11 26 995 4	515	1
993832914	3	01 38 281 14	119	1	995973014	36	11 26 995 4	518	1
993856014	566	10 57 624 5	40	1	995973214	36	11 26 995 4	523	1
993877114	582	99 38 329 14	10	1	995991314	442	11 26 261 2	630	1
994001014	606	10 51 743 9	28	1	996467014	37	11 26 995 4	567	1
994078814	3	01 38 281 14	583	1	996467114	38	11 26 995 4	590	1
994460114	37	11 26 995 4	545	1	996625314	314	99 33 241 14	820	1
994465914	36	11 26 995 4	519	1	996625414	314	99 33 241 14	821	1
994486214	469	11 22 970 6	900	1	996770614	278	11 26 949 8	822	1
994486214	469	11 22 970 6	901	1	996770614	278	11 26 949 8	825	1
994486214	469	11 22 970 6	910	1	996770714	278	11 26 949 8	823	1
994852014	577	99 48 521 14	1	1	996770814	278	11 26 949 8	824	1
994852114	3	01 38 281 14	115	1	996771014	278	11 26 949 8	826	1
994905314	442	11 26 261 2	636	1	996771114	278	11 26 949 8	827	1
995006114	38	11 26 995 4	578	1	996778614	37	11 26 995 4	541	1

Item	Sheet	Assembly	Pos.	Quantity	Item	Sheet	Assembly	Pos.	Quantity
996779714	271	11 24 972 9	803	1					

Description	Item	Pos.	Quantity	Sheet	Assembly	Description
12-SIDED SCREW M10X30 X5	10132558	4	4	236	10 14 013 6	EXHAUST TC MOUNTING
A-FRAME 1 ASSEMBLY UNIT	11239378	63	1	2	01 38 281 14	LR 1300 SX
A-FRAME 1 CPL	11244444	10	1	471	11 23 937 8	A-FRAME 1 ASSEMBLY UNIT
A-FRAME 2 CPL	11244759	11	1	523	11 24 618 2	NEEDLE ADD-ON PARTS
A-FRAME 3 CPL	11246116	12	1	523	11 24 618 2	NEEDLE ADD-ON PARTS
A-FRAME ELECTRICS	10531207	3	1	473	11 24 444 4	A-FRAME 1 CPL
A-FRAME ELECTRICS	11313817	3	1	538	11 24 611 6	A-FRAME 3 CPL
A-FRAME ERECTION CYL INST	10519694	51	1	6	11 24 047 9	SUPERSTRUCTURE CPL
A-FRAME ERECTION HYDR	10519695	2	1	64	10 51 969 4	A-FRAME ERECTION CYL INST
ACCESS CPL	10501795	32	6	408	10 55 876 0	CRAWLER CARRIER RIGHT CP
ACCESS CPL	10501795	32	6	417	10 55 876 1	CRAWLER CARRIER LEFT CP
ADAPTER	10121091	1	1	101	90 74 418	REGULATING VALVE
ADAPTER	11221276	5	1	143	11 22 126 8	PUMP ELEMENT
ADAPTER	570950308	1	1	149	70 19 834	ADAPTER
ADAPTER	7019834	4	1	143	11 22 126 8	PUMP ELEMENT
ADAPTER 5X84X90 PA 6	10549545	53	1	350	11 29 327 3	CABIN CPL
ADAPTER FRAME	10599215	32	1	356	10 51 907 9	CONTROL STAND LEFT
ADAPTER PLATE	11220468	5	1	698	11 22 037 2	FOOT PEDAL EL INSTALLATIO
ADAPTER PLATE	11223693	5	2	365	11 22 369 1	FOOT PEDAL EL INSTALLATIO
ADAPTER PLATE	959571914	14	2	644	10 51 971 3	SELF-LOADING SYSTEM RFK
ADD-ON FLANGE	11250972	30	1	78	11 24 682 0	DISTRIBUTOR GEARBOX
ADD-ON FLANGE	11250974	70	3	78	11 24 682 0	DISTRIBUTOR GEARBOX
ADD-ON FLANGE	11290845	80	1	78	11 24 682 0	DISTRIBUTOR GEARBOX
ADD-ON FLANGE	790403714	40	1	78	11 24 682 0	DISTRIBUTOR GEARBOX
ADD-ON HOUSING	605613701	41	1	34	10 56 645 8	TERMINAL BOX
ADD-ON HOUSING	693149814	45	1	34	10 56 645 8	TERMINAL BOX
ADD-ON PRELIMINARY FUEL F	10550911	10	1	270	11 24 114 4	FUEL SYSTEM
ADDITIONAL BALLAST	10349439	12	6	307	99 27 572 14	BASEPLATE CPL
ADDITIONAL BALLAST	10349440	11	8	307	99 27 572 14	BASEPLATE CPL
ADHESIVE LABEL	10518558	1	1	610	10 52 439 2	HOSE LIST
ADHESIVE LABEL	10518558	2	5	610	10 52 439 2	HOSE LIST
ADHESIVE LABEL	10518558	1	3	658	99 27 747 14	HOSE LIST
ADHESIVE LABEL	10518558	1	2	675	10 53 635 2	HOSE LIST
ADJUSTING NUT	944403703	8	1	412	96 93 178 01	TRACTION DRIVE
ADJUSTING PIECE	10287665	2	1	154	11 21 593 6	PUMP ELEMENT
ADJUSTING PISTON	11219925	1	1	81	11 21 990 5	ADJUSTMENT
ADJUSTING SCREW	10599567	6	1	89	11 06 730 4	SHUTDOWN VALVE
ADJUSTING SCREW M12X46 8.	10129505	4	1	201	10 12 949 9	FINAL CONTROL VALVE
ADJUSTMENT	11219905	2	1	79	10 53 430 7	V PUMP
ADJUSTMENT	11224738	2	1	397	51 24 059 14	VARIABLE DISPLACEMENT MO
AERATION FILTER	11280868	12	1	48	10 56 073 3	FUEL TANK CPL
AERATION FILTER	510690614	13	1	44	10 56 070 1	TANK HYDR CPL
AGGREGATE DIESEL ENGINE	11265606	6	1	2	01 38 281 14	LR 1300 SX
AGGREGATE SUPPORT PRE-A	10148254	1	1	175	10 14 768 6	POWER UNIT SUPPORT ATT
AIR COND. COMPRESSOR A	10142860	340	1	172	10 14 032 7	DIESEL ENGINE
AIR CONDITIONER	592293014	124	1	367	10 35 250 8	CABIN
AIR CONDITIONING COMPRES	10116767	1	1	226	10 14 286 0	AIR COND. COMPRESSOR A
AIR CONDITIONING UNIT RFK	11231891	724	1	4	01 38 281 14	LR 1300 SX
AIR FILTER	11246790	10	1	264	11 24 114 2	SUCTION UNIT AIR
AIR INTAKE ASSEMBLY	10147364	224	1	172	10 14 032 7	DIESEL ENGINE
AIR INTAKE PIPE ASS.	10147366	220	1	172	10 14 032 7	DIESEL ENGINE
AIR NOZZLE	10352465	53	1	366	10 35 250 8	CABIN
AIR NOZZLE	592289314	52	1	366	10 35 250 8	CABIN
AIR SUCTION PIPE	10146758	1	1	220	10 14 736 6	AIR INTAKE PIPE ASS.
ANCHORING ROD	10226400	10	2	492	99 24 404 14	ANCHORING ROD CPL
ANCHORING ROD	10226401	10	2	500	99 24 405 14	ANCHORING ROD CPL
ANCHORING ROD	10226401	10	4	506	99 24 406 14	ANCHORING ROD CPL
ANCHORING ROD	10336904	10	2	476	99 26 417 14	ANCHORING ROD CPL
ANCHORING ROD	10336970	10	2	460	99 30 060 14	ANCHORING ROD CPL
ANCHORING ROD	10337309	10	2	519	99 24 594 14	ANCHORING ROD CPL

Description	Item	Pos.	Quantity	Sheet	Assembly	Description
ANCHORING ROD	10349541	11	2	542	10 59 968 1	ANCHORING ROD CPL
ANCHORING ROD	949910614	4	2	501	91 85 911 14	ANCHORING ROD CPL
ANCHORING ROD	949910614	4	4	507	99 03 609 14	ANCHORING ROD CPL
ANCHORING ROD	949910614	10	2	571	99 26 362 14	ANCHORING ROD CPL
ANCHORING ROD	949910714	4	2	493	91 85 910 14	ANCHORING ROD CPL
ANCHORING ROD	949910714	11	2	535	99 26 359 14	ANCHORING ROD CPL
ANCHORING ROD	949910714	11	2	571	99 26 362 14	ANCHORING ROD CPL
ANCHORING ROD	949912814	10	2	542	10 59 968 1	ANCHORING ROD CPL
ANCHORING ROD	950735514	36	2	582	99 38 329 14	TIP BOOM CPL
ANCHORING ROD	950735614	38	1	582	99 38 329 14	TIP BOOM CPL
ANCHORING ROD CPL	10599681	12	1	538	11 24 611 6	A-FRAME 3 CPL
ANCHORING ROD CPL	918591014	13	1	481	11 24 570 5	INTERMEDIATE PIECE ASSE
ANCHORING ROD CPL	918591014	45	1	525	11 24 336 5	PIVOT PIECE NEEDLE CPL
ANCHORING ROD CPL	918591014	12	1	551	11 24 084 9	INTERMEDIATE PIECE ASSE
ANCHORING ROD CPL	918591114	13	1	497	11 24 571 1	INTERMEDIATE PIECE ASSE
ANCHORING ROD CPL	918591114	12	1	558	11 24 162 7	INTERMEDIATE PIECE ASSE
ANCHORING ROD CPL	990360914	13	1	503	11 24 571 7	INTERMEDIATE PIECE ASSE
ANCHORING ROD CPL	990360914	12	1	561	11 24 163 1	INTERMEDIATE PIECE ASSE
ANCHORING ROD CPL	992440414	12	1	481	11 24 570 5	INTERMEDIATE PIECE ASSE
ANCHORING ROD CPL	992440514	12	1	497	11 24 571 1	INTERMEDIATE PIECE ASSE
ANCHORING ROD CPL	992440614	12	1	503	11 24 571 7	INTERMEDIATE PIECE ASSE
ANCHORING ROD CPL	992459414	14	1	509	11 24 132 4	BOOM HEAD CPL
ANCHORING ROD CPL	992635914	12	1	531	11 24 475 9	A-FRAME 2 CPL
ANCHORING ROD CPL	992636214	13	1	564	11 24 263 6	NEEDLE HEAD CPL
ANCHORING ROD CPL	992641714	11	1	471	11 23 937 8	A-FRAME 1 ASSEMBLY UNIT
ANCHORING ROD CPL	993006014	57	1	450	11 23 820 3	PIVOT PIECE CPL
ANEMOMETER CPL	990646114	13	1	509	11 24 132 4	BOOM HEAD CPL
ANEMOMETER CPL	990646114	12	1	564	11 24 263 6	NEEDLE HEAD CPL
ANEMOMETER EL RFK	970720403	970	1	514	99 06 461 14	ANEMOMETER CPL
ANGLE	10563082	25	1	282	11 24 409 0	PANELLING SUPERSTR. INSTA
ANGLE	10574364	18	2	288	11 24 409 1	COVERS
ANGLE	11244498	53	1	284	11 24 409 0	PANELLING SUPERSTR. INSTA
ANGLE	11263757	18	1	164	11 24 113 8	MOTOR BEARING CPL
ANGLE	11290852	230	1	78	11 24 682 0	DISTRIBUTOR GEARBOX
ANGLE	964450414	14	1	547	10 53 146 1	TUBING HYDR
ANGLE INDICATION	919058414	11	1	473	11 24 444 4	A-FRAME 1 CPL
ANGLE TRANSMITTER	11286324	10	1	455	10 53 044 6	PIVOT PIECE EL
ANGLE TRANSMITTER	11286324	10	1	510	10 53 141 3	BOOM HEAD EL
ANGLE TRANSMITTER	11286324	10	1	526	10 53 140 9	PIVOT PIECE EL
ANGLE TRANSMITTER	11286324	10	1	565	10 53 141 0	HEAD WHIP HOIST EL
ANTENNA	11645490	76	1	351	11 27 973 6	CABIN EL
ANTITHEFT LOCK	10663904	32	1	362	11 26 095 7	CONTROL STAND RIGHT
AREA LIMITATION CPL RFK	10529523	829	1	4	01 38 281 14	LR 1300 SX
ARM REST LEFT	10036948	90	1	692	10 04 363 3	DRIVERS SEAT AIR-SUSPEN
ARM REST LEFT	7024982	90	1	380	10 22 506 8	OPERATOR SEAT
ARM REST RIGHT	10036949	91	1	692	10 04 363 3	DRIVERS SEAT AIR-SUSPEN
ARM REST RIGHT	7024983	91	1	380	10 22 506 8	OPERATOR SEAT
ASSEMBLY INSTAL.	11241145	60	1	73	11 24 048 0	CENTRAL POWER UNIT
ATTACHABLE SLEEVE HOUSIN	602209714	93	1	354	10 55 963 5	SWITCH CABINET X1
ATTACHMENT CHAIN	990835714	40	1	408	10 55 876 0	CRAWLER CARRIER RIGHT CP
ATTACHMENT CHAIN	990835714	40	1	417	10 55 876 1	CRAWLER CARRIER LEFT CP
AUXILIARY HEATING EL RFK	11266526	3	1	601	11 29 551 4	LOW TEMPERATURE PACKAG
AUXILIARY ROPE	606655308	2	1	567	92 75 218 08	LIMIT SWITCH HOISTING ABOV
AXIAL FACE SEAL	10097987	5	2	413	79 05 233 14	CARRYING ROLLER CPL
AXIAL FACE SEAL	7610244	2	1	412	96 93 178 01	TRACTION DRIVE
AXIAL WASHER	540270814	15	6	613	54 02 701 14	PLANETARY STAGE
AXLE	10097986	4	1	413	79 05 233 14	CARRYING ROLLER CPL
AXLE	11310955	13	2	485	11 28 390 8	BOOM ACCESS
AXLE	11310955	13	2	499	11 28 583 8	BOOM ACCESS
AXLE	11310955	13	2	505	11 28 626 1	BOOM ACCESS

Description	Item	Pos.	Quantity	Sheet	Assembly	Description
AXLE	918539614	17	1	320	10 51 968 6	LUG SUPERSTRUCTURE CPL
AXLE CPL	991413814	1	1	475	99 14 137 14	DEFLECTION PULLEY CPL
AXLE HOLDER	703003014	28	1	450	11 23 820 3	PIVOT PIECE CPL
AXLE HOLDER	703003014	6	2	513	11 28 610 5	RETAINING DEVICE CPL
AXLE HOLDER	954372503	14	4	419	11 23 548 1	CENTRE PART CPL
AXLE HOLDER	956378214	27	2	450	11 23 820 3	PIVOT PIECE CPL
AXLE ST.CONST.	918684114	3	2	533	11 29 426 7	MOUNTING PARTS
AXLE ST.CONST.	918684114	14	1	541	11 29 938 4	MOUNTING PARTS
AXLE ST.CONST.	970901603	14	2	637	99 10 116 14	ROPE GUIDE
AXLE ST.CONST.	993191014	2	1	533	11 29 426 7	MOUNTING PARTS
BACK PART	10289987	2	1	692	10 04 363 3	DRIVERS SEAT AIR-SUSPEN
BACK PART	10289988	2	1	380	10 22 506 8	OPERATOR SEAT
BACK-UP RING CUT	11007749	14	1	119	10 12 321 4	SEAL KIT PRESSUR.CONTROL
BACK-UP RING CUT	11007751	13	1	119	10 12 321 4	SEAL KIT PRESSUR.CONTROL
BACK-UP RING CUT	7382212	23	1	136	10 12 226 5	SEAL KIT REGULATING VALVE
BACK-UP-ALARM	10288438	52	1	29	11 24 519 0	SUPERSTRUCTURE EL
BACKING RING	10352355	110	1	669	59 21 826 14	SUPPORT CYL
BACKING RING	10352359	130	4	669	59 21 826 14	SUPPORT CYL
BACKING RING	513325614	22	1	548	59 21 280 14	SINGLE-ACTING CYL
BACKING RING	790400714	23	1	548	59 21 280 14	SINGLE-ACTING CYL
BALL	4901195	13	1	98	92 67 343	VENTILATION VALVE
BALL JOINT	10286648	4	1	684	10 53 352 4	CABIN EL
BALL JOINT	10505322	2	1	466	10 09 917 3	DOUBLE-ACTING CYL
BALL PIVOT	592288314	33	1	366	10 35 250 8	CABIN
BALL PIVOT	592288314	12	1	373	59 22 871 14	FRONT WINDOW CPL
BALL VALVE	11270955	17	1	604	11 29 444 5	HEATING RFK
BALL VALVE	510682014	39	1	8	11 29 618 6	SUPERSTRUCTURE HYDR
BALL VALVE	510682014	1	1	445	91 90 239 14	CABLE HYDR
BALLAST CHAIN	797027814	23	1	650	11 23 619 7	SELF-LOADING SYSTEM RFK
BAR SEAL KIT	11267400	10	2	86	11 21 993 0	PUMP HOUSING
BASE PLATE	10098143	1	2	70	99 16 061 14	SUPPORT CPL
BASEPLATE CPL	992757214	10	1	306	99 23 386 14	COUNTERWEIGHT ARRANGEM
BASEPLATE ST.CONST.	992741214	10	1	307	99 27 572 14	BASEPLATE CPL
BATTERY	10664204	31	2	28	11 24 519 0	SUPERSTRUCTURE EL
BATTERY COVER	10560674	1	1	60	10 56 067 3	BATTERY INSTALLATION CPL
BATTERY INSTALLATION CPL	10560673	45	1	6	11 24 047 9	SUPERSTRUCTURE CPL
BATTERY MAIN SWITCH	606070908	35	1	28	11 24 519 0	SUPERSTRUCTURE EL
BATTERY TERMINAL CLAMP	10224316	33	1	28	11 24 519 0	SUPERSTRUCTURE EL
BATTERY TERMINAL CLAMP	10224316	3	1	31	10 53 048 9	FUSE HOLDER
BATTERY TERMINAL CLAMP	10547876	32	2	28	11 24 519 0	SUPERSTRUCTURE EL
BEARING	11278605	10	1	614	54 02 702 14	ROPE DRUM CPL
BEARING	7025009	59	1	382	10 28 999 3	VIBRATING SYSTEM
BEARING	7025010	59	1	694	10 28 999 2	VIBRATING SYSTEM
BEARING BUSHING	10121971	2	4	204	10 13 382 3	SUCTION PUMP PRE-ASS.
BEARING COVER	9072908	3	1	225	90 72 906	INTERMEDIATE WHEEL CPL
BEARING FLANGE	11219918	6	1	79	10 53 430 7	V PUMP
BEARING HOLDER	9887948	14	2	126	10 14 360 7	REPAIR SET SWIVEL BEARIN
BEARING RING	540272714	3	1	616	54 02 704 14	POWER TAKE-OFF CPL
BEARING SHELL	7025904	17	2	154	11 21 593 6	PUMP ELEMENT
BLADDER ACCUMULATOR	510641214	16	1	75	11 24 773 5	HYDR POWER UNIT
BLANKING PLUG	591645108	64	1	284	11 24 409 0	PANELLING SUPERSTR. INSTA
BLANKING PLUG	779014014	65	2	284	11 24 409 0	PANELLING SUPERSTR. INSTA
BLANKING PLUG	779016414	57	4	621	10 55 372 1	ROOF RAILING RFK
BLANKING PLUG	779016501	84	1	412	96 93 178 01	TRACTION DRIVE
BLOCK	11226015	10	1	346	51 14 347 14	SG SAFETY BLOCK
BLOCK	943958914	30	1	8	11 29 618 6	SUPERSTRUCTURE HYDR
BLOCK	943958914	5	1	453	10 51 826 1	PIVOT PIECE HYDR
BLOCK	943958914	5	1	547	10 53 146 1	TUBING HYDR
BOLT CONNECTION	910353714	8	2	512	11 28 629 9	MOUNTING PARTS
BOLT CONNECTION	910362714	5	1	570	11 28 774 6	MOUNTING PARTS

Description	Item	Pos.	Quantity	Sheet	Assembly	Description
BOLT CONNECTION	910362714	14	1	631	91 92 763 14	HOOK 2 RFK
BOLT ST.CONST.	992387314	1	1	570	11 28 774 6	MOUNTING PARTS
BOOM ACCESS	11283908	14	1	482	11 24 570 3	BOOM INTERMEDIATE SECTIO
BOOM ACCESS	11285838	14	1	498	11 24 570 9	BOOM INTERMEDIATE SECTIO
BOOM ACCESS	11286261	14	1	504	11 24 571 5	BOOM INTERMEDIATE SECTIO
BOOM ACCESS	11289787	14	1	552	11 24 084 8	BOOM INTERMEDIATE SECTIO
BOOM ACCESS	11289792	14	1	559	11 24 162 5	BOOM INTERMEDIATE SECTIO
BOOM ACCESS	11289792	14	1	562	11 24 163 0	BOOM INTERMEDIATE SECTIO
BOOM ELECTRICS	992497814	17	1	627	11 21 529 8	WARNING LIGHT EL RFK
BOOM HEAD CPL	11241324	81	1	2	01 38 281 14	LR 1300 SX
BOOM HEAD EL	10531413	3	1	509	11 24 132 4	BOOM HEAD CPL
BOOM INTERMEDIATE SECTIO	11240848	10	1	551	11 24 084 9	INTERMEDIATE PIECE ASSE
BOOM INTERMEDIATE SECTIO	11241625	10	1	558	11 24 162 7	INTERMEDIATE PIECE ASSE
BOOM INTERMEDIATE SECTIO	11241630	10	1	561	11 24 163 1	INTERMEDIATE PIECE ASSE
BOOM INTERMEDIATE SECTIO	11245703	10	1	481	11 24 570 5	INTERMEDIATE PIECE ASSE
BOOM INTERMEDIATE SECTIO	11245709	10	1	497	11 24 571 1	INTERMEDIATE PIECE ASSE
BOOM INTERMEDIATE SECTIO	11245715	10	1	503	11 24 571 7	INTERMEDIATE PIECE ASSE
BOTTOM HOOK BLOCK	790411214	133	1	3	01 38 281 14	LR 1300 SX
BOTTOM HOOK BLOCK	790487114	137	1	3	01 38 281 14	LR 1300 SX
BOW-TYPE CLAMP	10144699	20	1	268	11 24 114 3	EXHAUST GAS SYSTEM
BOWL	10331395	14	1	273	10 30 300 7	FUEL PREFILTER
BOWLEN SEALING	10294170	9	1	273	10 30 300 7	FUEL PREFILTER
BOX NUT DIN 3870-B2-LL8 M1	11282770	45	1	604	11 29 444 5	HEATING RFK
BRACING TUBE	11245756	1	1	624	11 24 575 5	PEDESTAL
BRACING TUBE	11245757	2	2	624	11 24 575 5	PEDESTAL
BRACING TUBE	958097914	10	2	422	99 26 718 14	PEDESTAL
BRACKET	10099007	5	1	334	99 29 388 14	BRACKET CPL
BRACKET	10099010	6	1	331	99 33 537 14	ROPE GUARD LUG CPL
BRACKET	10289976	72	1	380	10 22 506 8	OPERATOR SEAT
BRACKET	10289976	72	1	692	10 04 363 3	DRIVERS SEAT AIR-SUSPEN
BRACKET	10336583	10	2	41	10 51 961 6	OIL COOLER INSTALLATION
BRACKET	10336584	11	2	41	10 51 961 6	OIL COOLER INSTALLATION
BRACKET	10336709	1	1	334	99 29 388 14	BRACKET CPL
BRACKET	10336711	2	2	332	99 29 389 14	SIDE COMPONENT
BRACKET	10336711	2	2	333	99 29 392 14	SIDE COMPONENT
BRACKET	10349206	7	8	298	10 54 591 0	MOTOR COWLING
BRACKET	10445651	39	2	302	11 24 483 7	MOUNTING PARTS SUPERST
BRACKET	10555261	8	2	641	99 23 420 14	INTERMEDIATE TENSIONING
BRACKET	10575967	13	1	302	11 24 483 7	MOUNTING PARTS SUPERST
BRACKET	10575968	15	1	302	11 24 483 7	MOUNTING PARTS SUPERST
BRACKET	10575969	18	1	302	11 24 483 7	MOUNTING PARTS SUPERST
BRACKET	10575970	23	8	302	11 24 483 7	MOUNTING PARTS SUPERST
BRACKET	10575971	37	3	302	11 24 483 7	MOUNTING PARTS SUPERST
BRACKET	10575985	20	2	302	11 24 483 7	MOUNTING PARTS SUPERST
BRACKET	10579757	26	1	302	11 24 483 7	MOUNTING PARTS SUPERST
BRACKET	10592334	19	1	515	10 59 863 3	PENDULUM CPL
BRACKET	10592619	43	1	302	11 24 483 7	MOUNTING PARTS SUPERST
BRACKET	10592621	44	1	302	11 24 483 7	MOUNTING PARTS SUPERST
BRACKET	10597981	2	2	60	10 56 067 3	BATTERY INSTALLATION CPL
BRACKET	11234405	58	1	302	11 24 483 7	MOUNTING PARTS SUPERST
BRACKET	11234413	59	1	302	11 24 483 7	MOUNTING PARTS SUPERST
BRACKET	11247011	38	1	302	11 24 483 7	MOUNTING PARTS SUPERST
BRACKET	11247375	22	1	302	11 24 483 7	MOUNTING PARTS SUPERST
BRACKET	11247791	29	1	302	11 24 483 7	MOUNTING PARTS SUPERST
BRACKET	11247808	33	1	302	11 24 483 7	MOUNTING PARTS SUPERST
BRACKET	11248460	12	1	268	11 24 114 3	EXHAUST GAS SYSTEM
BRACKET	11248969	9	2	282	11 24 409 0	PANELLING SUPERSTR. INSTA
BRACKET	11257849	72	1	304	11 24 483 7	MOUNTING PARTS SUPERST
BRACKET	11257851	75	3	304	11 24 483 7	MOUNTING PARTS SUPERST
BRACKET	11263413	16	1	164	11 24 113 8	MOTOR BEARING CPL

Description	Item	Pos.	Quantity	Sheet	Assembly	Description
BRACKET	11265945	35	1	302	11 24 483 7	MOUNTING PARTS SUPERST
BRACKET	11279036	44	1	275	11 24 114 5	ASSEMBLY INSTAL.
BRACKET	11279237	48	1	275	11 24 114 5	ASSEMBLY INSTAL.
BRACKET	11308593	14	1	268	11 24 114 3	EXHAUST GAS SYSTEM
BRACKET	11308594	15	1	268	11 24 114 3	EXHAUST GAS SYSTEM
BRACKET	7370581	73	1	380	10 22 506 8	OPERATOR SEAT
BRACKET	949758314	24	1	302	11 24 483 7	MOUNTING PARTS SUPERST
BRACKET	958478414	56	2	284	11 24 409 0	PANELLING SUPERSTR. INSTA
BRACKET	958478414	10	10	298	10 54 591 0	MOTOR COWLING
BRACKET	958478414	15	4	422	99 26 718 14	PEDESTAL
BRACKET	958478414	5	2	624	11 24 575 5	PEDESTAL
BRACKET	959465714	38	2	282	11 24 409 0	PANELLING SUPERSTR. INSTA
BRACKET	967313703	25	1	302	11 24 483 7	MOUNTING PARTS SUPERST
BRACKET	971304903	1	2	415	99 08 357 14	ATTACHMENT CHAIN
BRACKET	993334214	36	2	525	11 24 336 5	PIVOT PIECE NEEDLE CPL
BRACKET CPL	992938614	4	1	331	99 33 537 14	ROPE GUARD LUG CPL
BRACKET CPL	992938814	3	4	331	99 33 537 14	ROPE GUARD LUG CPL
BRACKET CPL	992943414	5	1	331	99 33 537 14	ROPE GUARD LUG CPL
BRACKET REAR	11262893	1	1	383	11 26 095 6	STEERING CONSOLE RIGHT
BRACKET ST.CONST.	10574837	15	1	619	10 55 372 1	ROOF RAILING RFK
BRACKET ST.CONST.	10575981	11	1	302	11 24 483 7	MOUNTING PARTS SUPERST
BRACKET ST.CONST.	10575984	14	1	302	11 24 483 7	MOUNTING PARTS SUPERST
BRACKET ST.CONST.	10576104	19	1	302	11 24 483 7	MOUNTING PARTS SUPERST
BRACKET ST.CONST.	10585933	16	2	619	10 55 372 1	ROOF RAILING RFK
BRACKET ST.CONST.	10585936	17	1	619	10 55 372 1	ROOF RAILING RFK
BRAKE FLANGE	540272814	1	1	617	54 02 705 14	DRIVE UNIT CPL
BRAKE VALVE	10227399	60	1	313	51 22 527 14	OIL MOTOR
BRAKE VALVE	512401414	60	1	322	51 22 942 14	OIL MOTOR
BRAKE VALVE	512411914	10	1	399	11 22 473 8	ADJUSTMENT
BS HOUSING	605604914	93	1	29	11 24 519 0	SUPERSTRUCTURE EL
BS HOUSING	693157014	80	2	566	10 57 624 5	CABLE LOOM
BS HOUSING	693157114	50	1	578	97 14 959 03	HOIST LIMIT SWITCH EL
BS HOUSING	693157114	50	1	583	91 95 871 14	HOIST LIMIT SWITCH EL
BS HOUSING	693157114	50	1	634	10 51 167 1	LIMIT SWITCH EL
BUFFER	10567622	31	4	254	11 24 114 0	COOLER INSTALLATION WATE
BUFFER	592286814	13	1	366	10 35 250 8	CABIN
BUILT-IN VALVE	511640714	2	1	158	51 16 377 14	VALVE BLOCK FEED PRESSUR
BULKHEAD PLATE	10020512	9	1	286	11 24 409 1	COVERS
BULKHEAD PLATE	10226510	15	1	350	11 29 327 3	CABIN CPL
BULKHEAD PLATE	10445043	47	1	450	11 23 820 3	PIVOT PIECE CPL
BUSBAR	10529597	57	1	354	10 55 963 5	SWITCH CABINET X1
BUSBAR	11219647	58	1	354	10 55 963 5	SWITCH CABINET X1
BUSHING	10097992	2	2	413	79 05 233 14	CARRYING ROLLER CPL
BUSHING	10145395	6	1	239	10 14 584 5	GENERATOR, PRE-ASSEMBLE
BUSHING	10227126	8	1	457	61 61 541 14	CABLE DRUM
BUSHING	10546993	20	2	470	11 27 536 5	TILT-BACK SUPPORTS INSTAL
BUSHING	11239698	37	2	473	11 24 444 4	A-FRAME 1 CPL
BUSHING	11890145	2	2	410	10 55 716 2	GUIDE WHEEL CPL
BUSHING	9269136	11	9	107	90 75 894	CYLINDER WITH BUSHING
BUSHING	956070614	6	2	577	99 48 521 14	TIP BOOM CPL
BUSHING	956648114	44	1	582	99 38 329 14	TIP BOOM CPL
BUSHING	959001414	10	1	329	99 29 258 14	LUG SHEAVE SET
BUSHING	959019014	11	3	47	10 56 073 2	FUEL TANK ASSY.
BUSHING	959841114	39	4	473	11 24 444 4	A-FRAME 1 CPL
BUSHING 100/130X33 S770QL	10336763	5	3	329	99 29 258 14	LUG SHEAVE SET
BUSHING 100/130X36 S770QL	959869314	3	3	329	99 29 258 14	LUG SHEAVE SET
BUSHING 100/80X40 E470;EN	954398803	15	2	512	11 28 629 9	MOUNTING PARTS
BUSHING 100/90X22 S355J2H	949721314	21	5	533	11 29 426 7	MOUNTING PARTS
BUSHING 100/90X22 S355J2H	949721314	28	2	541	11 29 938 4	MOUNTING PARTS
BUSHING 110/75.5X10 POM	10336924	16	8	476	99 26 417 14	ANCHORING ROD CPL

Description	Item	Pos.	Quantity	Sheet	Assembly	Description
BUSHING 110/75.5X2.5 POM	10336928	18	4	476	99 26 417 14	ANCHORING ROD CPL
BUSHING 110/75.5X5 POM	10336926	17	8	476	99 26 417 14	ANCHORING ROD CPL
BUSHING 115/135X21 E470;EN	970859103	40	4	473	11 24 444 4	A-FRAME 1 CPL
BUSHING 115/135X56 E470;EN	970588503	61	2	6	11 24 047 9	SUPERSTRUCTURE CPL
BUSHING 120/150X88 E470;EN	954398703	60	2	6	11 24 047 9	SUPERSTRUCTURE CPL
BUSHING 13/28X15 S355J2;EN	970726703	19	4	424	11 22 050 0	WINCHES INSTALLATION
BUSHING 13/28X15 S355J2;EN	970726703	19	4	439	11 22 050 1	WINCHES INSTALLATION
BUSHING 140/150X72 S355J2H	956627714	17	1	570	11 28 774 6	MOUNTING PARTS
BUSHING 140/160X100 GZ-CU	11233062	42	1	521	99 23 398 14	ROLLER SET
BUSHING 140/160X55 LHR355-	956803414	16	2	521	99 23 398 14	ROLLER SET
BUSHING 140/160X77 LHR355-	956070514	4	2	577	99 48 521 14	TIP BOOM CPL
BUSHING 140/168.3X40 LHR35	956092714	25	2	577	99 48 521 14	TIP BOOM CPL
BUSHING 141/152.4X40 S355J		13	-2	631	91 92 763 14	HOOK 2 RFK
BUSHING 150/140X27 KUNST	959476114	19	2	570	11 28 774 6	MOUNTING PARTS
BUSHING 25/40X56	790212314	39	2	58	10 58 163 4	CABIN SUSPENSION CPL
BUSHING 26.5/20X30 POM	797029114	7	1	290	10 57 883 5	DOOR
BUSHING 26.5/20X30 POM	797029114	7	1	292	10 57 897 6	DOOR
BUSHING 26.5/20X30 POM	797029114	5	1	294	10 57 940 0	DOOR
BUSHING 26.5/20X30 POM	797029114	5	1	295	10 56 623 7	DOOR
BUSHING 26.5/20X30 POM	797029114	7	1	296	10 56 580 8	DOOR
BUSHING 30/20X32 POM	958471514	17	1	290	10 57 883 5	DOOR
BUSHING 30/20X32 POM	958471514	17	1	292	10 57 897 6	DOOR
BUSHING 30/20X32 POM	958471514	6	1	294	10 57 940 0	DOOR
BUSHING 30/20X32 POM	958471514	6	1	295	10 56 623 7	DOOR
BUSHING 30/20X32 POM	958471514	14	1	296	10 56 580 8	DOOR
BUSHING 30/40X38 GZ-CUSN	967216303	2	1	611	96 72 161 03	ROPE PULLEY CPL
BUSHING 50/55X30	708014114	4	4	513	11 28 610 5	RETAINING DEVICE CPL
BUSHING 50/60X35 CUZN25AL	10504737	19	1	67	59 21 041 14	DOUBLE-ACTING CYL
BUSHING 50/60X42	11230849	18	2	473	11 24 444 4	A-FRAME 1 CPL
BUSHING 51/70X13.5 POLYAMI	10534042	14	8	64	10 51 969 4	A-FRAME ERECTION CYL INST
BUSHING 90.5/101.6X120 LHR	949748414	23	2	533	11 29 426 7	MOUNTING PARTS
BUSHING 90.5/101.6X120 LHR	949748414	23	1	541	11 29 938 4	MOUNTING PARTS
BUSHING 90.5/101.6X173 LHR	949740814	22	1	533	11 29 426 7	MOUNTING PARTS
BUSHING 90.5/101.6X26 LHR35	949740614	11	10	637	99 10 116 14	ROPE GUIDE
BUSHING 90.5/101.6X27 LHR35	957140114	25	2	541	11 29 938 4	MOUNTING PARTS
BUSHING 90.5/101.6X67 LHR35		11	-2	631	91 92 763 14	HOOK 2 RFK
BUSHING 90.5/101.6X67 LHR35	949740914	24	1	533	11 29 426 7	MOUNTING PARTS
BUSHING 90.5/101.6X67 LHR35	949740914	22	1	541	11 29 938 4	MOUNTING PARTS
BUSHING 90/100X33 S355J2H	949741014	25	4	533	11 29 426 7	MOUNTING PARTS
BUSHING 90/110X36 S355J2H	949988214	19	2	521	99 23 398 14	ROLLER SET
BUSHING 90/110X50 E470;EN	385037314	14	2	512	11 28 629 9	MOUNTING PARTS
BUSHING 90/130X29 PA 6 G	289007114	7	24	550	99 31 679 14	SUPPORT SYSTEM CPL
BUSHING 91/101.6X145 LHR35	956805414	18	2	521	99 23 398 14	ROLLER SET
BUSHING 91/101.6X5 LHR355-	956803714	25	2	521	99 23 398 14	ROLLER SET
BUSHING 91/101.6X60 LHR355-	956805314	17	2	521	99 23 398 14	ROLLER SET
BUSHING 96.2/110X80 PA 6 G	11245109	27	1	533	11 29 426 7	MOUNTING PARTS
BUSHING DIN 1850,ISO 4379 9	10561944	28	2	533	11 29 426 7	MOUNTING PARTS
BUSHING EN 10060 RD44X26.	10588730	12	3	42	10 56 070 0	TANK INSTALLATION HYDR
BUSHING EN 10210-2 140.5/159	956803214	32	2	521	99 23 398 14	ROLLER SET
BUSHING EN 10210-2 90/145X	949752814	24	2	541	11 29 938 4	MOUNTING PARTS
BUSHING HOUSING	6203137	93	1	352	11 27 973 6	CABIN EL
BUSHING RD100/90.5X64.5 PO	10349225	16	7	533	11 29 426 7	MOUNTING PARTS
BUSHING RD100/90.5X64.5 PO	10349225	26	6	541	11 29 938 4	MOUNTING PARTS
BUSHING RD110/90.5X13 POM	10224403	17	3	533	11 29 426 7	MOUNTING PARTS
BUSHING RD110/90.5X13 POM	10224403	32	2	541	11 29 938 4	MOUNTING PARTS
BUSHING RD110/90.5X4.85 PO	10224407	20	4	533	11 29 426 7	MOUNTING PARTS
BUSHING RD110/90.5X4.85 PO	10224407	29	1	541	11 29 938 4	MOUNTING PARTS
BUSHING RD110/90.5X6 POM	10224406	19	4	533	11 29 426 7	MOUNTING PARTS
BUSHING RD110/90.5X6 POM	10224406	30	2	541	11 29 938 4	MOUNTING PARTS
BUSHING RD130/120X26 KUN	10349224	26	2	533	11 29 426 7	MOUNTING PARTS

Description	Item	Pos.	Quantity	Sheet	Assembly	Description
BUSHING RD130/120X26 KUN	10349224	27	2	541	11 29 938 4	MOUNTING PARTS
BUSHING RD130/120X30 KUN	10223371	11	1	329	99 29 258 14	LUG SHEAVE SET
BUSHING RD130/90.5X8.5 PO	10224404	18	2	533	11 29 426 7	MOUNTING PARTS
BUSHING RD130/90.5X8.5 PO	10224404	31	1	541	11 29 938 4	MOUNTING PARTS
BUSHING RD160/140.5X40 PO	10349289	18	4	570	11 28 774 6	MOUNTING PARTS
BUTT STRAP	10591681	50	4	586	79 04 112 14	BOTTOM HOOK BLOCK
BUTT STRAP	10591682	18	4	586	79 04 112 14	BOTTOM HOOK BLOCK
BUTT STRAP	11271487	18	8	593	79 04 871 14	BOTTOM HOOK BLOCK
BUTT STRAP	950610714	10	2	648	99 35 606 14	MOUNTING LINK CPL
BUTT STRAP	953580303	10	1	388	99 18 041 14	LASHING SUPERSTRUCTURE
BUTT STRAP	959476014	7	2	570	11 28 774 6	MOUNTING PARTS
BUTT STRAP	959912014	11	6	309	99 29 803 14	LASHING BALLAST
BUTT STRAP	959912514	15	12	309	99 29 803 14	LASHING BALLAST
BUTTON	10289975	43	4	380	10 22 506 8	OPERATOR SEAT
BUTTON	10504994	9	1	677	11 23 623 3	POCKET LOCK
BYPASS CONNECTOR	918365114	91	1	29	11 24 519 0	SUPERSTRUCTURE EL
C-RAIL ST.CONST.	10599614	47	1	302	11 24 483 7	MOUNTING PARTS SUPERST
CABIN	10352508	10	1	350	11 29 327 3	CABIN CPL
CABIN CPL	11293273	30	1	2	01 38 281 14	LR 1300 SX
CABIN EL	10533524	50	1	683	10 53 246 1	CAMERA MONITORING
CABIN EL	11279736	3	1	350	11 29 327 3	CABIN CPL
CABIN INCLINATION EL RFK	10531224	3	1	688	10 51 728 0	CABIN INCLINATION RFK
CABIN INCLINATION RFK	10517280	719	1	4	01 38 281 14	LR 1300 SX
CABIN REM. EL	11215302	50	1	627	11 21 529 8	WARNING LIGHT EL RFK
CABIN SUSPENSION CPL	10581634	35	1	6	11 24 047 9	SUPERSTRUCTURE CPL
CABLE	11234650	150	4	352	11 27 973 6	CABIN EL
CABLE	11240499	3	1	684	10 53 352 4	CABIN EL
CABLE	993856014	40	1	566	10 57 624 5	CABLE LOOM
CABLE ANEMOMETER	918361414	41	1	566	10 57 624 5	CABLE LOOM
CABLE BREAK PREVENTION	592179114	3	2	547	10 53 146 1	TUBING HYDR
CABLE DRUM	616154114	21	1	456	91 92 528 14	CABLE DRUM
CABLE DRUM	919252814	31	1	455	10 53 044 6	PIVOT PIECE EL
CABLE DRUM	919252814	31	1	526	10 53 140 9	PIVOT PIECE EL
CABLE DUCT CABINET 1	916525114	31	1	351	11 27 973 6	CABIN EL
CABLE GLAND	10045155	21	5	566	10 57 624 5	CABLE LOOM
CABLE GLAND	10045155	34	1	578	97 14 959 03	HOIST LIMIT SWITCH EL
CABLE GLAND	10045155	34	1	583	91 95 871 14	HOIST LIMIT SWITCH EL
CABLE GLAND	10045155	34	1	634	10 51 167 1	LIMIT SWITCH EL
CABLE GLAND	602440101	37	2	628	99 24 978 14	BOOM ELECTRICS
CABLE GLAND	693148214	55	1	715	10 52 155 9	MODULE REFUELLING SYSTE
CABLE HARNESS	10145895	1	1	248	10 15 028 8	CABLE HARNESS MOUNTING
CABLE HARNESS	10153986	1	1	171	10 14 032 7	DIESEL ENGINE
CABLE HARNESS MOUNTING	10150288	580	1	173	10 14 032 7	DIESEL ENGINE
CABLE HOLDER RFK	953431703	35	1	633	10 51 176 9	NEEDLE BOOM CPL
CABLE HYDR	919023914	29	1	443	10 56 187 5	TOOL EQUIPMENT
CABLE LADDER ST.CONST.	11246919	42	1	302	11 24 483 7	MOUNTING PARTS SUPERST
CABLE LADDER ST.CONST.	11247023	61	1	304	11 24 483 7	MOUNTING PARTS SUPERST
CABLE LADDER ST.CONST.	11247131	62	1	304	11 24 483 7	MOUNTING PARTS SUPERST
CABLE LADDER ST.CONST.	11247158	48	1	302	11 24 483 7	MOUNTING PARTS SUPERST
CABLE LADDER ST.CONST.	11247207	50	1	302	11 24 483 7	MOUNTING PARTS SUPERST
CABLE LADDER ST.CONST.	11265089	65	1	304	11 24 483 7	MOUNTING PARTS SUPERST
CABLE LOOM	10151665	582	1	173	10 14 032 7	DIESEL ENGINE
CABLE LOOM	10223208	30	1	378	59 22 930 14	AIR CONDITIONER
CABLE LOOM	10289980	75	1	692	10 04 363 3	DRIVERS SEAT AIR-SUSPEN
CABLE LOOM	10289981	76	1	692	10 04 363 3	DRIVERS SEAT AIR-SUSPEN
CABLE LOOM	10575599	21	1	510	10 53 141 3	BOOM HEAD EL
CABLE LOOM	10576212	21	1	526	10 53 140 9	PIVOT PIECE EL
CABLE LOOM	10576245	21	1	565	10 53 141 0	HEAD WHIP HOIST EL
CABLE LOOM	11100081	1	1	249	10 13 555 3	WIRING HARNESS ASSEMBLY
CABLE LOOM 1 PIVOT PIECE E	10572939	21	1	455	10 53 044 6	PIVOT PIECE EL

Description	Item	Pos.	Quantity	Sheet	Assembly	Description
CABLE LOOM REFUELLING S	10521560	60	1	715	10 52 155 9	MODULE REFUELLING SYSTE
CABLE LOOM W 1	11247122	11	1	160	11 24 448 7	CENTRAL POWER UNIT EL
CABLE LOOM W 10	10559638	25	1	354	10 55 963 5	SWITCH CABINET X1
CABLE LOOM W 19	10519082	201	1	352	11 27 973 6	CABIN EL
CABLE LOOM W 2	11247121	11	1	28	11 24 519 0	SUPERSTRUCTURE EL
CABLE LOOM W 20	11261603	202	1	352	11 27 973 6	CABIN EL
CABLE LOOM W 22	10519085	204	1	352	11 27 973 6	CABIN EL
CABLE LOOM W 3	10563643	13	1	28	11 24 519 0	SUPERSTRUCTURE EL
CABLE LOOM W 40	10563800	41	1	474	10 53 120 7	A-FRAME ELECTRICS
CABLE LOOM W 40	11314473	50	1	474	10 53 120 7	A-FRAME ELECTRICS
CABLE LUG	602206114	24	1	34	10 56 645 8	TERMINAL BOX
CABLE LUG	602206514	74	2	29	11 24 519 0	SUPERSTRUCTURE EL
CABLE PROTECTION SWITCH	10351100	21	1	629	11 21 530 2	CABIN REM. EL
CABLE PROTECTION SWITCH	10351101	60	1	354	10 55 963 5	SWITCH CABINET X1
CABLE PROTECTION SWITCH	10351102	61	3	354	10 55 963 5	SWITCH CABINET X1
CABLE PROTECTION SWITCH	10351103	62	1	354	10 55 963 5	SWITCH CABINET X1
CABLE PROTECTION SWITCH	10351104	63	2	354	10 55 963 5	SWITCH CABINET X1
CABLE PROTECTION SWITCH	10351105	64	1	354	10 55 963 5	SWITCH CABINET X1
CABLE PROTECTION SWITCH	10351106	65	3	354	10 55 963 5	SWITCH CABINET X1
CABLE SOCK	602707214	90	1	443	10 56 187 5	TOOL EQUIPMENT
CABLE SOCK	602707414	91	1	443	10 56 187 5	TOOL EQUIPMENT
CABLE TIE	11234767	130	30	29	11 24 519 0	SUPERSTRUCTURE EL
CABLE TIE	11234767	125	20	276	11 24 114 5	ASSEMBLY INSTAL.
CAGE NUT M10-R-140-32	413003308	80	32	280	11 24 114 6	COVER
CAGE NUT M10-R-140-32	413003308	38	18	300	11 24 922 2	COVER UNDERSIDE
CAGE NUT M10-R-140-47	413003508	82	10	280	11 24 114 6	COVER
CAGE NUT M10-R-140-47	413003508	58	4	284	11 24 409 0	PANELLING SUPERSTR. INSTA
CAGE NUT M10-R-140-62	413013314	81	8	280	11 24 114 6	COVER
CAGE NUT M10-R-140-62	413013314	13	24	298	10 54 591 0	MOTOR COWLING
CAGE NUT M10-RR-140-47	485549914	21	2	41	10 51 961 6	OIL COOLER INSTALLATION
CAGE NUT M10-RR-140-47	485549914	2	8	62	10 56 069 4	MODULES INSTALLATION
CAGE NUT M10-RR-140-47	485549914	32	53	300	11 24 922 2	COVER UNDERSIDE
CAGE NUT M10-RR-140-62	485550014	19	4	60	10 56 067 3	BATTERY INSTALLATION CPL
CAGE NUT M10-RR-140-62	485550014	29	21	282	11 24 409 0	PANELLING SUPERSTR. INSTA
CAGE NUT M10-RR-140-62	485550014	25	2	300	11 24 922 2	COVER UNDERSIDE
CAGE NUT M8-R-123-47 ST	413003208	9	2	698	11 22 037 2	FOOT PEDAL EL INSTALLATIO
CAGE NUT M8-RR-123-47	485550114	61	5	284	11 24 409 0	PANELLING SUPERSTR. INSTA
CAGE NUT M8-RR-123-47	485550114	4	4	332	99 29 389 14	SIDE COMPONENT
CAGE NUT M8-RR-123-47	485550114	4	4	333	99 29 392 14	SIDE COMPONENT
CAGE NUT M8-RR-123-47	485550114	16	2	335	99 29 386 14	BRACKET CPL
CAGE NUT M8-RR-123-47	485550114	16	2	336	99 29 434 14	BRACKET CPL
CAGE NUT M8-RR-123-47	485550114	30	3	350	11 29 327 3	CABIN CPL
CAGE NUT M8-RR-123-47	485550114	82	1	604	11 29 444 5	HEATING RFK
CAGE NUT M8-RR-123-47	485550114	43	2	621	10 55 372 1	ROOF RAILING RFK
CAMERA CCD	10024012	31	1	681	10 50 775 0	CAMERA MONITORING
CAMERA CCD	10024012	31	1	683	10 53 246 1	CAMERA MONITORING
CAMERA INSTALLATION	11223442	1	1	678	11 21 990 7	VIDEO MONITORING SYSTEM
CAMERA MONITORING	10507750	3	1	678	11 21 990 7	VIDEO MONITORING SYSTEM
CAMERA MONITORING	10507750	8	1	682	11 89 400 8	VIDEO MONITORING SYSTEM
CAMERA MONITORING	10532461	7	1	682	11 89 400 8	VIDEO MONITORING SYSTEM
CAMERA MONITORING	11893352	3	1	682	11 89 400 8	VIDEO MONITORING SYSTEM
CAMS LIMIT SWITCH	606281014	45	1	28	11 24 519 0	SUPERSTRUCTURE EL
CAMSHAFT CPL.	10138231	100	1	171	10 14 032 7	DIESEL ENGINE
CAN MODULE	10347554	1	1	30	10 35 167 4	CAN MODULE
CAN MODULE	10351656	21	1	28	11 24 519 0	SUPERSTRUCTURE EL
CAN MODULE	10351660	23	1	28	11 24 519 0	SUPERSTRUCTURE EL
CAN MODULE	10351667	22	1	28	11 24 519 0	SUPERSTRUCTURE EL
CAN MODULE	10351668	26	1	28	11 24 519 0	SUPERSTRUCTURE EL
CAN MODULE	10351671	24	1	28	11 24 519 0	SUPERSTRUCTURE EL
CAN MODULE	10351672	27	1	28	11 24 519 0	SUPERSTRUCTURE EL

Description	Item	Pos.	Quantity	Sheet	Assembly	Description
CAN MODULE	10351674	28	1	28	11 24 519 0	SUPERSTRUCTURE EL
CAN MODULE	10677274	23	1	362	11 26 095 7	CONTROL STAND RIGHT
CAP	11239908	7	1	657	59 21 584 14	LOWERING BRAKE VALVE
CARRIER RAIL	602106714	58	0.37	34	10 56 645 8	TERMINAL BOX
CARRYING ROLLER CPL	790523314	15	2	408	10 55 876 0	CRAWLER CARRIER RIGHT CP
CARRYING ROLLER CPL	790523314	15	2	417	10 55 876 1	CRAWLER CARRIER LEFT CP
CELL RUBBER	262107814	24	6	60	10 56 067 3	BATTERY INSTALLATION CPL
CENTER-ZERO RELAY	630121508	83	1	354	10 55 963 5	SWITCH CABINET X1
CENTRAL COUNTERW. ST.C	11242597	10	4	420	11 24 812 0	CENTRAL COUNTERWEIGHT
CENTRAL COUNTERWEIGHT	11248120	37	1	2	01 38 281 14	LR 1300 SX
CENTRAL GREASING	11273155	23	1	6	11 24 047 9	SUPERSTRUCTURE CPL
CENTRAL LUBRICATION PUM	11223123	12	1	52	11 27 315 5	CENTRAL GREASING
CENTRAL LUBRICATION RFK	11284236	821	1	4	01 38 281 14	LR 1300 SX
CENTRAL POWER UNIT	11240480	10	1	71	11 26 560 6	AGGREGATE DIESEL ENGINE
CENTRAL POWER UNIT EL	11244487	3	1	73	11 24 048 0	CENTRAL POWER UNIT
CENTRE PART CPL	11235481	12	1	389	11 23 547 8	UC CPL
CHAIN	740000208	20	3	522	99 30 800 14	HOIST LIMIT SWITCH INSTAL.
CHAIN	740000208	20	1	570	11 28 774 6	MOUNTING PARTS
CHAIN	740000908	4	0.624	415	99 08 357 14	ATTACHMENT CHAIN
CHAIN CONNECTION LOCK	773967214	2	4	415	99 08 357 14	ATTACHMENT CHAIN
CHAIN CPL	10350940	22	4	644	10 51 971 3	SELF-LOADING SYSTEM RFK
CHAIN LOCK	773947708	21	2	570	11 28 774 6	MOUNTING PARTS
CHARGE AIR CORRUGATED H	10521397	35	4	261	11 24 114 1	COOLER INSTALLATION CHA
CHARGE AIR PIPE	10562107	28	1	261	11 24 114 1	COOLER INSTALLATION CHA
CHARGE AIR PIPE	11250430	20	1	261	11 24 114 1	COOLER INSTALLATION CHA
CHARGE AIR PIPE	11250438	21	1	261	11 24 114 1	COOLER INSTALLATION CHA
CHARGE AIR PIPE	11250439	25	1	261	11 24 114 1	COOLER INSTALLATION CHA
CHARGER	10567084	31	1	708	10 56 013 7	MAINS SUPPLY BATTERY
CHECK SCREW M10X101 31CR	9076176	13	1	133	10 12 226 2	REGULATION REPAIR KIT
CHECK VALVE	11226088	100	2	346	51 14 347 14	SG SAFETY BLOCK
CHEESE HEAD SCREW DIN 60	11314349	11	3	477	11 23 749 8	SUPPORT CPL
CHEESE HEAD SCREW DIN 60	11314349	14	3	494	11 23 290 7	SUPPORT CPL
CHEESE HEAD SCREW DIN 60	11314349	14	4	495	11 23 292 2	SUPPORT CPL
CHEESE HEAD SCREW DIN 60	11314349	14	4	579	11 25 204 2	SUPPORT CPL
CIRCLIP DIN 128 10	460000903	6	2	635	95 34 317 03	CABLE HOLDER RFK
CIRCLIP DIN 7980 12 FST	4980013	25	16	95	10 11 834 9	DOUBLE V-PUMP
CIRCUIT ELEMENT CPL	606655208	1	1	567	92 75 218 08	LIMIT SWITCH HOISTING ABOV
CLAMP	10122693	10	1	182	10 14 861 5	OIL SUMP PRE-ASS.
CLAMP	10127614	4	1	221	10 14 736 9	INTAKE STACK ASSEMBLY
CLAMP	10129179	5	1	210	10 13 508 0	PRESSURE ADAPTER
CLAMP	10336774	11	1	479	99 29 588 14	SUPPORT
CLAMP	10336774	11	2	480	10 35 063 3	FASTENER
CLAMP	10513605	31	5	261	11 24 114 1	COOLER INSTALLATION CHA
CLAMP	11000593	13	2	238	10 14 622 4	CYCLE VALVE
CLAMP	11215976	28	1	604	11 29 444 5	HEATING RFK
CLAMP	11229805	30	2	264	11 24 114 2	SUCTION UNIT AIR
CLAMP	7004780	27	1	604	11 29 444 5	HEATING RFK
CLAMP	7381292	21	1	217	10 14 588 5	LEAK OIL RETURN LINE
CLAMP	7381292	12	7	238	10 14 622 4	CYCLE VALVE
CLAMP	7381629	5	3	186	10 14 671 6	OIL LINE PRE-ASSEMBLY
CLAMP	7381631	14	1	221	10 14 736 9	INTAKE STACK ASSEMBLY
CLAMP	7381631	16	1	221	10 14 736 9	INTAKE STACK ASSEMBLY
CLAMP	7382088	15	1	217	10 14 588 5	LEAK OIL RETURN LINE
CLAMP	774212914	31	2	75	11 24 773 5	HYDR POWER UNIT
CLAMP	774255714	54	4	254	11 24 114 0	COOLER INSTALLATION WATE
CLAMP	774259914	9	6	547	10 53 146 1	TUBING HYDR
CLAMP - ADD-ON UNIT	10146587	10	1	248	10 15 028 8	CABLE HARNESS MOUNTING
CLAMP-HALF	602008508	57	6	254	11 24 114 0	COOLER INSTALLATION WATE
CLAMP-HALF	602008808	38	4	419	11 23 548 1	CENTRE PART CPL
CLAMP-HALF	602010114	36	8	419	11 23 548 1	CENTRE PART CPL

Description	Item	Pos.	Quantity	Sheet	Assembly	Description
CLAMP-HALF	602017114	72	4	450	11 23 820 3	PIVOT PIECE CPL
CLAMP-HALF	602017114	19	4	485	11 28 390 8	BOOM ACCESS
CLAMP-HALF	602017114	19	4	499	11 28 583 8	BOOM ACCESS
CLAMP-HALF	602017114	19	4	505	11 28 626 1	BOOM ACCESS
CLAMP-HALF	7365090	56	6	254	11 24 114 0	COOLER INSTALLATION WATE
CLAMP-HALF	7404678	37	4	419	11 23 548 1	CENTRE PART CPL
CLAMP-HALF	7413103	38	12	408	10 55 876 0	CRAWLER CARRIER RIGHT CP
CLAMP-HALF	7413103	38	12	417	10 55 876 1	CRAWLER CARRIER LEFT CP
CLAMPING BRACKET	10509133	3	2	60	10 56 067 3	BATTERY INSTALLATION CPL
CLAMPING LEVER	10555411	9	1	385	10 53 756 0	LAMP HOLDER CPL
CLAMPING PROFILE	7014524	42	5	254	11 24 114 0	COOLER INSTALLATION WATE
CLAMPING PROFILE	7014524	30	4.5	280	11 24 114 6	COVER
CLAMPING RING	979896808	30	2	268	11 24 114 3	EXHAUST GAS SYSTEM
CLAMPING SLEEVE	10097989	7	2	413	79 05 233 14	CARRYING ROLLER CPL
CLAMPING SOCKET	10576251	20	1	566	10 57 624 5	CABLE LOOM
CLOGGING INDICATOR	592200514	20	1	75	11 24 773 5	HYDR POWER UNIT
CLOSING FLANGE	944672614	42	1	10	11 29 618 6	SUPERSTRUCTURE HYDR
CLOSING FLANGE	949341514	45	1	10	11 29 618 6	SUPERSTRUCTURE HYDR
CLOSING PIN	592333714	6	1	373	59 22 871 14	FRONT WINDOW CPL
CLOSING PIN	7615720	2	1	368	10 22 645 4	DOOR ACCESSORIES
CLOSING PLATE	602153014	53	1	708	10 56 013 7	MAINS SUPPLY BATTERY
CLOSING PLATE	602730714	25	3	34	10 56 645 8	TERMINAL BOX
CLOSING PLATE	602812714	26	1	34	10 56 645 8	TERMINAL BOX
CLOSING PLATE	602812714	87	1	354	10 55 963 5	SWITCH CABINET X1
CLOSING PLATE	693182314	78	2	354	10 55 963 5	SWITCH CABINET X1
CLOSING RING	9885628	17	1	112	92 68 016	REPAIR KIT LOCK RING
CLOSURE CAP	11219856	11	1	494	11 23 290 7	SUPPORT CPL
COAT HOOK	592290014	76	1	367	10 35 250 8	CABIN
COLLAR NUT M14X1.5	514618508	47	1	86	11 21 993 0	PUMP HOUSING
COLLER BOLT	11297460	2	1	677	11 23 623 3	POCKET LOCK
COLLER BUSHING	592290614	4	1	375	59 22 905 14	MIRROR + SUNN VISOR
COLLER BUSHING 40/80X51	790519814	11	2	58	10 58 163 4	CABIN SUSPENSION CPL
COLLER BUSHING 90/140X18 S	950298014	15	4	533	11 29 426 7	MOUNTING PARTS
COLLER BUSHING 90/140X18 S	950298014	13	4	541	11 29 938 4	MOUNTING PARTS
COMPENSATOR	10141520	5	2	235	10 14 144 3	EXHAUST PIPE PRE-ASS.
COMPENSATOR	10149145	2	1	237	10 14 511 2	EXHAUST NOZZLE ATTACHM
COMPRESSION BAR	993081514	12	1	535	99 26 359 14	ANCHORING ROD CPL
COMPRESSOR	11374417	4	1	275	11 24 114 5	ASSEMBLY INSTAL.
COMPRESSOR	7415342	54	1	694	10 28 999 2	VIBRATING SYSTEM
CONICAL MOUNT	746923314	21	2	164	11 24 113 8	MOTOR BEARING CPL
CONICAL PLUG	779006901	85	1	412	96 93 178 01	TRACTION DRIVE
CONNECTING FLANGE SAE	790227714	32	1	8	11 29 618 6	SUPERSTRUCTURE HYDR
CONNECTING LINE	10141549	1	1	222	10 14 736 4	AIR INTAKE ASSEMBLY
CONNECTING LINE ADD-ON	10141801	230	1	172	10 14 032 7	DIESEL ENGINE
CONNECTING LINK	9887828	14	2	97	10 11 835 0	CONNECTION HOUSING
CONNECTING PIECE PRE-ASS	10141790	217	1	172	10 14 032 7	DIESEL ENGINE
CONNECTING PIPE	10444797	75	1	276	11 24 114 5	ASSEMBLY INSTAL.
CONNECTING PIPE	11272895	16	2	604	11 29 444 5	HEATING RFK
CONNECTING PLATE	510427914	5	1	465	10 51 959 1	TUBING HYDR
CONNECTING PLATE	510662614	12	2	8	11 29 618 6	SUPERSTRUCTURE HYDR
CONNECTING PLATE	510662914	23	3	8	11 29 618 6	SUPERSTRUCTURE HYDR
CONNECTING PLATE	510662914	5	1	312	10 51 969 8	NEEDLE LUFFING WINCH HYD
CONNECTING PLATE	510662914	5	1	321	10 51 968 7	MAIN LUG HYDR
CONNECTING PLATE	511455014	3	1	608	10 51 726 2	TUBING HYDR
CONNECTING ROD BEARING	9073699	3	1	189	11 34 807 2	CONROD
CONNECTING ROD BEARING	9075607	2	1	189	11 34 807 2	CONROD
CONNECTION FLANGE	10132074	3	1	204	10 13 382 3	SUCTION PUMP PRE-ASS.
CONNECTION FLANGE	9268423	13	1	95	10 11 834 9	DOUBLE V-PUMP
CONNECTION FLANGE	9276385	11	1	95	10 11 834 9	DOUBLE V-PUMP
CONNECTION HOUSING	10118350	3	1	95	10 11 834 9	DOUBLE V-PUMP

Description	Item	Pos.	Quantity	Sheet	Assembly	Description
CONNECTION PARTS	11280481	10	1	704	11 28 423 6	CENTRAL LUBRICATION RFK
CONNECTION PARTS	11280482	10	2	52	11 27 315 5	CENTRAL GREASING
CONNECTION PIECE	10139391	6	1	179	10 14 201 8	CRANKCASE BREATHER ASS
CONNECTION PIECE	10139393	5	1	179	10 14 201 8	CRANKCASE BREATHER ASS
CONNECTION PIECE	11297647	12	1	704	11 28 423 6	CENTRAL LUBRICATION RFK
CONNECTION STUB	10128100	4	1	210	10 13 508 0	PRESSURE ADAPTER
CONNECTION SUPERSTR UC	10519696	31	1	2	01 38 281 14	LR 1300 SX
CONROD	11348054	1	1	189	11 34 807 2	CONROD
CONROD	11348072	60	6	171	10 14 032 7	DIESEL ENGINE
CONSOLE	10552306	1	1	50	10 55 268 1	DRIVER INSTALLATION
CONSOLE	10579755	3	2	164	11 24 113 8	MOTOR BEARING CPL
CONSOLE	10579779	5	1	164	11 24 113 8	MOTOR BEARING CPL
CONSOLE	10579979	7	1	60	10 56 067 3	BATTERY INSTALLATION CPL
CONSOLE	11215384	6	1	164	11 24 113 8	MOTOR BEARING CPL
CONSOLE	11215385	13	1	264	11 24 114 2	SUCTION UNIT AIR
CONSOLE	11247208	12	1	264	11 24 114 2	SUCTION UNIT AIR
CONSOLE	11247464	9	1	268	11 24 114 3	EXHAUST GAS SYSTEM
CONSOLE	11247607	8	1	268	11 24 114 3	EXHAUST GAS SYSTEM
CONSOLE	11249800	2	2	164	11 24 113 8	MOTOR BEARING CPL
CONSOLE	11249889	9	2	164	11 24 113 8	MOTOR BEARING CPL
CONSOLE	11250222	4	2	164	11 24 113 8	MOTOR BEARING CPL
CONSOLE	11263501	17	1	164	11 24 113 8	MOTOR BEARING CPL
CONSOLE	918585114	22	2	58	10 58 163 4	CABIN SUSPENSION CPL
CONSOLE	954485303	64	1	304	11 24 483 7	MOUNTING PARTS SUPERST
CONSOLE	992757514	11	4	308	10 52 656 0	MOUNTING PARTS
CONSOLE ST. CONST.	10551670	33	2	577	99 48 521 14	TIP BOOM CPL
CONSOLE ST. CONST.	11245759	2	2	623	11 24 147 8	UC PLATFORM
CONSOLE ST. CONST.	11245922	3	2	623	11 24 147 8	UC PLATFORM
CONSTRUCTION KIT OUTPUT	10132357	302	1	116	10 12 878 7	V PUMP
CONSTRUCTION KIT OUTPUT	10138068	305	1	116	10 12 878 7	V PUMP
CONTACT BUSHING	605601801	427	24	34	10 56 645 8	TERMINAL BOX
CONTACT BUSHING	605610301	426	24	34	10 56 645 8	TERMINAL BOX
CONTACT GUARD	10351108	59	2	354	10 55 963 5	SWITCH CABINET X1
CONTACT LOCK	693013414	12	1	712	10 52 957 6	REFUELLING PUMP CPL
CONTACT LOCK	7368242	52	3	351	11 27 973 6	CABIN EL
CONTACT LOCK	7368248	94	1	352	11 27 973 6	CABIN EL
CONTACT PIN	605601701	32	6	578	97 14 959 03	HOIST LIMIT SWITCH EL
CONTACT PIN	605601701	32	8	583	91 95 871 14	HOIST LIMIT SWITCH EL
CONTACT PIN	605601701	32	8	634	10 51 167 1	LIMIT SWITCH EL
CONTAINER	592286714	9	2	366	10 35 250 8	CABIN
CONTROL AREA	612436814	11	1	358	10 03 610 7	KEYBOARD OPERATING PANE
CONTROL BLOCK	511640614	1	1	158	51 16 377 14	VALVE BLOCK FEED PRESSUR
CONTROL BOX ANNEXE	10146795	571	1	173	10 14 032 7	DIESEL ENGINE
CONTROL CONSOLE	11236557	10	1	600	11 25 016 2	EMERGENCY OPERATION EL
CONTROL CONSOLE	11236937	10	1	35	11 23 908 2	CONTROL CONSOLE
CONTROL CONSOLE	11239082	111	1	29	11 24 519 0	SUPERSTRUCTURE EL
CONTROL GEAR	10144039	5	1	275	11 24 114 5	ASSEMBLY INSTAL.
CONTROL GEAR	11219917	5	1	79	10 53 430 7	V PUMP
CONTROL LEAD	600454314	53	6.5	351	11 27 973 6	CABIN EL
CONTROL LEAD	600454314	85	4.5	566	10 57 624 5	CABLE LOOM
CONTROL LEAD	600454314	1002	2	568	99 38 560 14	CABLE
CONTROL LEAD	600454314	35	4	578	97 14 959 03	HOIST LIMIT SWITCH EL
CONTROL LEAD	600454314	35	4	583	91 95 871 14	HOIST LIMIT SWITCH EL
CONTROL LEAD	600454314	35	60	634	10 51 167 1	LIMIT SWITCH EL
CONTROL LEAD	693030914	97	2	352	11 27 973 6	CABIN EL
CONTROL LID	511640814	3	1	158	51 16 377 14	VALVE BLOCK FEED PRESSUR
CONTROL LIGHT	11258086	41	1	28	11 24 519 0	SUPERSTRUCTURE EL
CONTROL PARTS	9079870	110	6	171	10 14 032 7	DIESEL ENGINE
CONTROL PLATE LEFT	9887035	2	1	106	98 89 833	RK CYLINDER+CONTROL PLAT
CONTROL STAND LEFT	10519079	10	1	351	11 27 973 6	CABIN EL

Description	Item	Pos.	Quantity	Sheet	Assembly	Description
CONTROL STAND RIGHT	11260957	20	1	351	11 27 973 6	CABIN EL
CONTROL SYSTEM	10223180	31	1	354	10 55 963 5	SWITCH CABINET X1
CONTROL UNIT	11219934	1	1	93	11 21 991 7	CONTROL GEAR
CONTROL VALVE	10114975	2	1	153	11 21 591 3	PUMP ELEMENT
CONTROL VALVE	10351603	2	1	143	11 22 126 8	PUMP ELEMENT
CONTROL VALVE	10409413	1	1	148	10 35 160 3	CONTROL VALVE
CONTROL VALVE	11215942	1	1	157	10 11 497 5	CONTROL VALVE
COOLANT	553078814	15	2.2	699	11 23 189 1	AIR CONDITIONING UNIT RFK
COOLANT PIPE BEND ADD-ON	10142742	382	1	172	10 14 032 7	DIESEL ENGINE
COOLER	11267560	29	1	257	10 57 423 7	COOLER MOTOR
COOLER INSTALLATION CHA	11241141	29	1	73	11 24 048 0	CENTRAL POWER UNIT
COOLER INSTALLATION WATE	11241140	28	1	73	11 24 048 0	CENTRAL POWER UNIT
COOLER MOTOR	10225925	21	1	8	11 29 618 6	SUPERSTRUCTURE HYDR
COOLER MOTOR	10574237	10	1	254	11 24 114 0	COOLER INSTALLATION WATE
COOLER MOTOR	10574239	1	1	261	11 24 114 1	COOLER INSTALLATION CHA
COOLING WATER AIR BLEED	10142744	387	1	172	10 14 032 7	DIESEL ENGINE
COOLING WATER HOSE	11621769	49	1	254	11 24 114 0	COOLER INSTALLATION WATE
COOLING WATER HOSE	11621769	50	1	254	11 24 114 0	COOLER INSTALLATION WATE
COOLING WATER HOSE	11621769	5	0.5	270	11 24 114 4	FUEL SYSTEM
COOLING WATER HOSE	11621769	61	6.5	275	11 24 114 5	ASSEMBLY INSTAL.
COOLING WATER HOSE	11621772	51	1	254	11 24 114 0	COOLER INSTALLATION WATE
COOLING WATER HOSE	11621772	62	2	275	11 24 114 5	ASSEMBLY INSTAL.
COOLING WATER HOSE	11621772	24	5	604	11 29 444 5	HEATING RFK
COOLING WATER HOSE	11621777	48	1	254	11 24 114 0	COOLER INSTALLATION WATE
COOLING WATER HOSE	11621783	2	21.55	39	99 14 627 14	HOT-WATER HEATING SUPE
COOLING WATER HOSE	11656331	47	1	254	11 24 114 0	COOLER INSTALLATION WATE
COOLING WATER PIPE	11250555	20	1	254	11 24 114 0	COOLER INSTALLATION WATE
COOLING WATER PIPE	11250556	21	1	254	11 24 114 0	COOLER INSTALLATION WATE
COOLING WATER PIPE	11269259	19	1	254	11 24 114 0	COOLER INSTALLATION WATE
COOLING WATER PIPE	11287692	18	1	254	11 24 114 0	COOLER INSTALLATION WATE
COPPER PASTE	10002552	132	1	236	10 14 013 6	EXHAUST TC MOUNTING
CORRUGATED PIPE	10227531	71	6	276	11 24 114 5	ASSEMBLY INSTAL.
COUNTERSUNK SCREW BN 4	10342191	4	3	188	10 12 134 5	RK CRANKSHAFT SEAL
COUNTERSUNK SCREW DIN 7	4001967	24	2	350	11 29 327 3	CABIN CPL
COUNTERSUNK SCREW DIN 7	4001967	28	24	665	11 89 568 6	SELF-LOADING SYSTEM RFK
COUNTERSUNK SCREW DIN 7	4600170	7	8	333	99 29 392 14	SIDE COMPONENT
COUNTERSUNK SCREW DIN 7	4600170	20	12	335	99 29 386 14	BRACKET CPL
COUNTERSUNK SCREW DIN 7	4600170	20	12	336	99 29 434 14	BRACKET CPL
COUNTERSUNK SCREW DIN	407071114	4	4	386	11 30 962 5	HOLDER CPL
COUNTERSUNK SCREW DIN 7	408606314	33	24	619	10 55 372 1	ROOF RAILING RFK
COUNTERSUNK SCREW DIN 7	4600257	4	7	334	99 29 388 14	BRACKET CPL
COUNTERSUNK SCREW DIN 7	4001205	3	7	334	99 29 388 14	BRACKET CPL
COUNTERSUNK SCREW DIN	4600157	11	16	335	99 29 386 14	BRACKET CPL
COUNTERSUNK SCREW DIN	4600157	11	16	336	99 29 434 14	BRACKET CPL
COUNTERSUNK SCREW DIN 7	408606214	37	4	350	11 29 327 3	CABIN CPL
COUNTERSUNK SCREW DIN 7	408606214	5	2	687	10 57 848 6	MONITOR CABIN ADD-ON
COUNTERSUNK SCREW DIN 7	4002551	6	4	332	99 29 389 14	SIDE COMPONENT
COUNTERSUNK SCREW DIN 7	4002551	6	4	333	99 29 392 14	SIDE COMPONENT
COUNTERSUNK SCREW DIN 7	4002551	101	4	604	11 29 444 5	HEATING RFK
COUNTERSUNK SCREW DIN 7	408606414	90	14	304	11 24 483 7	MOUNTING PARTS SUPERST
COUNTERSUNK SCREW DIN	408601008	16	4	459	10 58 193 7	GRATING CPL
COUNTERSUNK SCREW DIN	408601008	13	8	624	11 24 575 5	PEDESTAL
COUNTERSUNK SCREW DIN	408601014	42	6	284	11 24 409 0	PANELLING SUPERSTR. INSTA
COUNTERSUNK SCREW ISO	408602614	42	2	533	11 29 426 7	MOUNTING PARTS
COUNTERSUNK SCREW ISO	408600708	99	2	304	11 24 483 7	MOUNTING PARTS SUPERST
COUNTERSUNK SCREW ISO	408600708	6	8	365	11 22 369 1	FOOT PEDAL EL INSTALLATIO
COUNTERSUNK SCREW ISO	408600708	6	1	698	11 22 037 2	FOOT PEDAL EL INSTALLATIO
COUNTERSUNK SCREW ISO	10349756	93	6	304	11 24 483 7	MOUNTING PARTS SUPERST
COUNTERSUNK SCREW ISO	408600808	91	2	304	11 24 483 7	MOUNTING PARTS SUPERST
COUNTERSUNK SCREW ISO	4002655	92	10	304	11 24 483 7	MOUNTING PARTS SUPERST

Description	Item	Pos.	Quantity	Sheet	Assembly	Description
COUNTERSUNK SCREW ISO 2	407041214	3	3	384	97 07 857 03	SPIRIT LEVEL ASSY.
COUNTERSUNK SCREW ISO	4001266	42	2	715	10 52 155 9	MODULE REFUELLING SYSTE
COUNTERSUNK SCREW ISO 7	4002871	34	24	350	11 29 327 3	CABIN CPL
COUNTERSUNK SCREW ISO 7	4002401	5	4	383	11 26 095 6	STEERING CONSOLE RIGHT
COUNTERWEIGHT ARRANGEM	992338614	18	1	2	01 38 281 14	LR 1300 SX
COUPLING	10348619	20	1	706	10 52 293 0	SG TACHOGENERATOR RFK
COUPLING	11249334	2	1	169	11 24 113 9	MOTOR PRE-ASSEMBLY
COUPLING CPL	10115770	1	1	227	10 11 676 7	AIR CONDITIONING COMPRES
COUPLING FERRULE	10117768	11	1	140	10 13 452 1	THROUGH DRIVE
COUPLING FERRULE	10129873	11	1	137	10 12 987 4	THROUGH DRIVE
COUPLING FERRULE	10130007	11	1	138	10 13 000 5	THROUGH DRIVE
COUPLING FERRULE	10132360	11	1	139	10 13 235 7	CONSTRUCTION KIT OUTPUT
COUPLING FERRULE	10138069	11	1	141	10 13 806 8	CONSTRUCTION KIT OUTPUT
COUPLING FERRULE	9073827	15	1	99	10 11 835 7	REPAIR KIT CONNECTION HO
COUPLING LINK	10226402	11	4	460	99 30 060 14	ANCHORING ROD CPL
COUPLING LINK	10226402	11	4	492	99 24 404 14	ANCHORING ROD CPL
COUPLING LINK	10226402	11	4	500	99 24 405 14	ANCHORING ROD CPL
COUPLING LINK	10226402	11	8	506	99 24 406 14	ANCHORING ROD CPL
COUPLING LINK	10226402	18	4	519	99 24 594 14	ANCHORING ROD CPL
COUPLING LINK	10336761	11	8	476	99 26 417 14	ANCHORING ROD CPL
COUPLING LINK	10348662	12	4	633	10 51 176 9	NEEDLE BOOM CPL
COUPLING LINK	10348694	11	4	519	99 24 594 14	ANCHORING ROD CPL
COUPLING LINK	949911014	5	4	493	91 85 910 14	ANCHORING ROD CPL
COUPLING LINK	949911014	7	4	512	11 28 629 9	MOUNTING PARTS
COUPLING LINK	949911014	15	8	535	99 26 359 14	ANCHORING ROD CPL
COUPLING LINK	949911014	12	4	571	99 26 362 14	ANCHORING ROD CPL
COUPLING LINK	950113314	16	2	535	99 26 359 14	ANCHORING ROD CPL
COUPLING LINK	950275414	13	4	571	99 26 362 14	ANCHORING ROD CPL
COUPLING LINK	950361114	14	4	542	10 59 968 1	ANCHORING ROD CPL
COUPLING LINK	956814114	13	4	542	10 59 968 1	ANCHORING ROD CPL
COUPLING LINK	958145214	5	4	501	91 85 911 14	ANCHORING ROD CPL
COUPLING LINK	958145214	5	8	507	99 03 609 14	ANCHORING ROD CPL
COUPLING LINK	958281314	14	4	535	99 26 359 14	ANCHORING ROD CPL
COUPLING LINK	958281314	19	4	571	99 26 362 14	ANCHORING ROD CPL
COUPLING PIECE	10594064	13	1	75	11 24 773 5	HYDR POWER UNIT
COUPLING PIECE	11290850	200	2	78	11 24 682 0	DISTRIBUTOR GEARBOX
COUPLING SOCKET	605612214	42	1	708	10 56 013 7	MAINS SUPPLY BATTERY
COVER	10122317	1	1	252	10 14 637 4	LOCKING PIECES
COVER	10127967	1	1	245	10 12 797 9	LOCKING PIECES
COVER	10133334	8	1	95	10 11 834 9	DOUBLE V-PUMP
COVER	10134561	12	1	103	10 13 333 4	COVER
COVER	10149013	11	1	182	10 14 861 5	OIL SUMP PRE-ASS.
COVER	10520927	14	1	48	10 56 073 3	FUEL TANK CPL
COVER	10530487	7	1	31	10 53 048 9	FUSE HOLDER
COVER	10572054	27	4	665	11 89 568 6	SELF-LOADING SYSTEM RFK
COVER	10572241	3	1	402	10 55 154 8	QUICK RELEASE FITTING
COVER	10572242	3	1	454	10 55 157 6	QUICK RELEASE FITTING
COVER	10583346	10	1	280	11 24 114 6	COVER
COVER	10583347	11	1	280	11 24 114 6	COVER
COVER	10593544	48	2	350	11 29 327 3	CABIN CPL
COVER	10593554	49	1	350	11 29 327 3	CABIN CPL
COVER	10595280	12	2	168	10 58 017 0	RETURN PIPE
COVER	10687924	82	1	358	10 03 610 7	KEYBOARD OPERATING PANE
COVER	11217289	5	1	167	10 57 532 2	INTAKE PIPE OIL CPL
COVER	11219927	2	1	81	11 21 990 5	ADJUSTMENT
COVER	11219929	3	1	81	11 21 990 5	ADJUSTMENT
COVER	11226090	110	1	346	51 14 347 14	SG SAFETY BLOCK
COVER	11236709	3	1	700	11 21 750 0	LIQUEFIER
COVER	11241146	90	1	73	11 24 048 0	CENTRAL POWER UNIT
COVER	11252203	1	1	280	11 24 114 6	COVER

Description	Item	Pos.	Quantity	Sheet	Assembly	Description
COVER	11252205	16	1	280	11 24 114 6	COVER
COVER	11252206	17	1	280	11 24 114 6	COVER
COVER	11252207	2	1	280	11 24 114 6	COVER
COVER	11252208	8	1	280	11 24 114 6	COVER
COVER	11252211	3	1	280	11 24 114 6	COVER
COVER	11252213	9	1	280	11 24 114 6	COVER
COVER	11252214	4	1	280	11 24 114 6	COVER
COVER	11252215	5	1	280	11 24 114 6	COVER
COVER	11252216	6	1	280	11 24 114 6	COVER
COVER	11262861	12	1	280	11 24 114 6	COVER
COVER	11267378	1	1	82	11 21 992 7	COVER
COVER	11267396	1	1	83	11 21 992 9	COVER
COVER	385072014	65	2	58	10 58 163 4	CABIN SUSPENSION CPL
COVER	592287814	18	1	373	59 22 871 14	FRONT WINDOW CPL
COVER	7027755	3	1	273	10 30 300 7	FUEL PREFILTER
COVER	934756014	20	1	582	99 38 329 14	TIP BOOM CPL
COVER	942264714	21	2	44	10 56 070 1	TANK HYDR CPL
COVER	949196514	8	2	329	99 29 258 14	LUG SHEAVE SET
COVER	949724114	23	2	521	99 23 398 14	ROLLER SET
COVER	949741114	30	1	533	11 29 426 7	MOUNTING PARTS
COVER	949940914	12	2	570	11 28 774 6	MOUNTING PARTS
COVER	949943614	14	1	570	11 28 774 6	MOUNTING PARTS
COVER	949944514	13	2	570	11 28 774 6	MOUNTING PARTS
COVER	956856614	11	1	529	11 29 649 2	PIN CPL
COVER	970553303	29	1	533	11 29 426 7	MOUNTING PARTS
COVER	970553303	19	1	541	11 29 938 4	MOUNTING PARTS
COVER	971333403	13	1	408	10 55 876 0	CRAWLER CARRIER RIGHT CP
COVER	971333403	13	1	417	10 55 876 1	CRAWLER CARRIER LEFT CP
COVER LID	10036950	17	1	381	70 24 996	SEAT FRAME
COVER LID	10036950	17	2	693	70 28 516	SEAT FRAME
COVER LID	10129382	7	1	210	10 13 508 0	PRESSURE ADAPTER
COVER LID	10129383	8	1	210	10 13 508 0	PRESSURE ADAPTER
COVER LID	10129385	10	1	210	10 13 508 0	PRESSURE ADAPTER
COVER LID	11694640	9	1	210	10 13 508 0	PRESSURE ADAPTER
COVER LID	605618014	82	2	566	10 57 624 5	CABLE LOOM
COVER UNDERSIDE	11249222	12	1	71	11 26 560 6	AGGREGATE DIESEL ENGINE
COVERING ASSEMBLY	10146117	342	1	172	10 14 032 7	DIESEL ENGINE
COVERING ASSEMBLY	10146120	1	1	228	10 14 611 7	COVERING ASSEMBLY
COVERS	11244091	1	1	282	11 24 409 0	PANELLING SUPERSTR. INSTA
COVERS	592290114	78	1	367	10 35 250 8	CABIN
CRADLE	11219922	2	1	80	11 21 990 2	DRIVING GEAR
CRANK HANDLE	616155414	10	1	457	61 61 541 14	CABLE DRUM
CRANKCASE BREATHER	10136800	1	1	179	10 14 201 8	CRANKCASE BREATHER ASS
CRANKCASE BREATHER ASS	10142018	16	1	171	10 14 032 7	DIESEL ENGINE
CRANKCASE CPL.	10154386	10	1	171	10 14 032 7	DIESEL ENGINE
CRANKCASE PRE-ASS.	10154385	1	1	174	10 15 438 6	CRANKCASE CPL.
CRANKSHAFT ADD-ON PARTS	10141983	53	1	171	10 14 032 7	DIESEL ENGINE
CRANKSHAFT WITH GEAR	10147437	50	1	171	10 14 032 7	DIESEL ENGINE
CRAWLER CARRIER LEFT CP	10558761	11	1	389	11 23 547 8	UC CPL
CRAWLER CARRIER RIGHT CP	10558760	10	1	389	11 23 547 8	UC CPL
CROSS CONNECTOR	602731714	51	1	34	10 56 645 8	TERMINAL BOX
CROSS CONNECTOR	602812414	88	1	354	10 55 963 5	SWITCH CABINET X1
CROSS CONNECTOR	693138614	73	1	354	10 55 963 5	SWITCH CABINET X1
CROSS HANDLE 1 "	885391814	50	1	443	10 56 187 5	TOOL EQUIPMENT
CROSS STRAP	956507814	10	1	676	11 23 626 6	ROPE MOUNTING RFK
CROWBAR 1200 MM	790036914	12	1	444	10 56 183 8	TOOL
CROWBAR 600 MM	885400114	14	1	444	10 56 183 8	TOOL
CROWN NUT DIN 937 M48X1.5	411805514	57	2	533	11 29 426 7	MOUNTING PARTS
CUTOFF RELAY	630120108	81	4	354	10 55 963 5	SWITCH CABINET X1
CYCLE VALVE	10146224	436	1	172	10 14 032 7	DIESEL ENGINE

Description	Item	Pos.	Quantity	Sheet	Assembly	Description
CYCLE VALVE	10149191	1	1	238	10 14 622 4	CYCLE VALVE
CYL HEAD ADD-ON	10131768	80	6	171	10 14 032 7	DIESEL ENGINE
CYL LOCK	10542435	1	1	360	38 50 944 14	SWITCHING HOUSING
CYL ROLLER BEARING	10573892	2	1	587	10 50 435 2	ROPE PULLEY
CYL ROLLER BEARING	11490216	34	2	126	10 14 360 7	REPAIR SET SWIVEL BEARIN
CYL ROLLER BEARING	746509414	2	1	638	91 49 419 14	ROPE PULLEY CPL
CYL ROLLER BEARING	761001103	72	1	412	96 93 178 01	TRACTION DRIVE
CYL ROLLER BEARING	7610021	12	1	412	96 93 178 01	TRACTION DRIVE
CYL.NEEDLE BEARING	7469905	64	2	99	10 11 835 7	REPAIR KIT CONNECTION HO
CYL.NEEDLE BEARING	7469905	32	1	111	98 84 402	REPAIR KIT SHAFT
CYLINDER	10142758	40	6	171	10 14 032 7	DIESEL ENGINE
CYLINDER	10324901	1	1	147	11 49 032 3	CYLINDER
CYLINDER	11490323	1	1	146	10 32 489 2	DRIVING GEAR
CYLINDER	9075895	10	1	107	90 75 894	CYLINDER WITH BUSHING
CYLINDER BUSHING	10150966	1	1	187	10 14 275 8	CYLINDER
CYLINDER HEAD	10131623	1	1	193	10 13 728 5	CYLINDER HEAD
CYLINDER HEAD	10137285	1	1	192	10 13 728 6	CYLINDER HEAD PRE-ASS.
CYLINDER HEAD COVER	10134695	1	1	198	10 13 469 6	CYLINDER HEAD COVER ASS
CYLINDER HEAD COVER	10134698	1	1	196	10 12 653 5	CYLINDER HEAD COVER ASS
CYLINDER HEAD COVER	10134750	1	1	195	10 13 475 1	CYLINDER HEAD COVER ASS
CYLINDER HEAD COVER ASS	10126535	83	1	171	10 14 032 7	DIESEL ENGINE
CYLINDER HEAD COVER ASS	10134696	84	2	171	10 14 032 7	DIESEL ENGINE
CYLINDER HEAD COVER ASS	10134751	82	3	171	10 14 032 7	DIESEL ENGINE
CYLINDER HEAD GASKET	10133667	2	1	191	10 13 176 8	CYL HEAD ADD-ON
CYLINDER HEAD PRE-ASS.	10137286	1	1	191	10 13 176 8	CYL HEAD ADD-ON
CYLINDER LOCK	592289714	3	1	374	10 35 267 2	FLAP CPL
CYLINDER WITH BUSHING	9075894	1	1	106	98 89 833	RK CYLINDER+CONTROL PLAT
CYLINDRICAL ROLLER BEARIN	7380070	33	1	124	10 13 802 7	REPAIR KIT SHAFT
CYLINDRICAL ROLLER BEARIN	7380106	33	1	111	98 84 402	REPAIR KIT SHAFT
DATA CARD CF2	10541109	32	1	354	10 55 963 5	SWITCH CABINET X1
DEEP GROOVE BALL BEARIN	10350232	290	4	78	11 24 682 0	DISTRIBUTOR GEARBOX
DEEP GROOVE BALL BEARIN	10592555	30	1	339	99 04 645 14	DRIVE
DEEP GROOVE BALL BEARIN	616155214	4	2	457	61 61 541 14	CABLE DRUM
DEEP GROOVE BALL BEARIN	745120514	22	8	570	11 28 774 6	MOUNTING PARTS
DEEP GROOVE BALL BEARIN	745120514	30	2	633	10 51 176 9	NEEDLE BOOM CPL
DEEP GROOVE BALL BEARIN	745120514	20	2	637	99 10 116 14	ROPE GUIDE
DEEP GROOVE BALL BEARIN	745128314	40	1	615	54 02 703 14	FLANGE CPL
DEEP GROOVE BALL BEARIN	745141814	280	6	78	11 24 682 0	DISTRIBUTOR GEARBOX
DEEP GROOVE BALL BEARIN	745194714	12	1	617	54 02 705 14	DRIVE UNIT CPL
DEEP GROOVE BALL BEARIN	745906614	6	1	615	54 02 703 14	FLANGE CPL
DEEP GROOVE BALL BEARIN	745907514	23	1	616	54 02 704 14	POWER TAKE-OFF CPL
DEEP GROOVE BALL BEARIN	746171514	18	2	320	10 51 968 6	LUG SUPERSTRUCTURE CPL
DEFLECTION PULLEY CPL	991413714	32	1	473	11 24 444 4	A-FRAME 1 CPL
DESIGNATION CARD	602835914	52	1	34	10 56 645 8	TERMINAL BOX
DEVICE PLUG	605010314	41	1	708	10 56 013 7	MAINS SUPPLY BATTERY
DIAPHRAGM	10558762	34	1	408	10 55 876 0	CRAWLER CARRIER RIGHT CP
DIAPHRAGM	10558762	34	1	417	10 55 876 1	CRAWLER CARRIER LEFT CP
DIAPHRAGM	11235482	35	2	419	11 23 548 1	CENTRE PART CPL
DIAPHRAGM ACCUMULATOR	592274714	6	2	392	11 25 903 1	TUBING HYDR
DIAPHRAGM ACCUMULATOR	592274714	4	1	453	10 51 826 1	PIVOT PIECE HYDR
DIESEL ENGINE	10140327	1	1	169	11 24 113 9	MOTOR PRE-ASSEMBLY
DIRECTIONAL CONTROL VALV	10540182	230	1	346	51 14 347 14	SG SAFETY BLOCK
DIRECTIONAL CONTROL VALV	10591435	8	1	17	10 35 148 6	VALVE BLOCK
DIRECTIONAL CONTROL VALV	11223305	2	2	21	59 21 458 14	VALVE BLOCK
DIRECTIONAL CONTROL VALV	11229184	7	1	17	10 35 148 6	VALVE BLOCK
DIRECTIONAL CONTROL VALV	11233727	1	1	68	10 22 540 8	VALVE BLOCK
DIRECTIONAL CONTROL VALV	11286481	2	2	8	11 29 618 6	SUPERSTRUCTURE HYDR
DIRECTIONAL CONTROL VALV	510427214	6	2	17	10 35 148 6	VALVE BLOCK
DIRECTIONAL CONTROL VALV	510427214	5	1	608	10 51 726 2	TUBING HYDR
DIRECTIONAL CONTROL VALV	510429214	4	1	465	10 51 959 1	TUBING HYDR

Description	Item	Pos.	Quantity	Sheet	Assembly	Description
DIRECTIONAL CONTROL VALV	511432714	11	5	8	11 29 618 6	SUPERSTRUCTURE HYDR
DIRECTIONAL CONTROL VALV	511432714	4	1	312	10 51 969 8	NEEDLE LUFFING WINCH HYD
DIRECTIONAL CONTROL VALV	511432714	3	1	321	10 51 968 7	MAIN LUG HYDR
DIRECTIONAL CONTROL VALV	511480614	2	1	674	10 55 459 4	TUBING HYDR
DIRECTIONAL CTRL. VALVE	10224607	2	1	662	11 89 408 3	TUBING HYDR
DIRECTIONAL CTRL. VALVE	510403414	14	4	392	11 25 903 1	TUBING HYDR
DISH	10098157	60	11	284	11 24 409 0	PANELLING SUPERSTR. INSTA
DISH	10098157	18	20	298	10 54 591 0	MOTOR COWLING
DISH	10098157	12	28	422	99 26 718 14	PEDESTAL
DISH	10098157	42	53	450	11 23 820 3	PIVOT PIECE CPL
DISH	10098157	20	6	459	10 58 193 7	GRATING CPL
DISH	10098157	21	3	485	11 28 390 8	BOOM ACCESS
DISH	10098157	12	2	486	11 28 391 3	FIXING CLAMP
DISH	10098157	21	3	499	11 28 583 8	BOOM ACCESS
DISH	10098157	21	3	505	11 28 626 1	BOOM ACCESS
DISH	10098157	21	4	512	11 28 629 9	MOUNTING PARTS
DISH	10098157	54	6	525	11 24 336 5	PIVOT PIECE NEEDLE CPL
DISH	10098157	12	2	555	11 28 667 9	FIXING CLAMP
DISH	10098157	10	12	623	11 24 147 8	UC PLATFORM
DISH	10098157	10	28	624	11 24 575 5	PEDESTAL
DISH	10558629	11	2	556	11 28 544 3	SUPPORT SYSTEM CPL
DISPLACEMENT PISTON	10287733	1	1	156	10 28 766 5	ADJUSTING PIECE
DISTANCE RING 91/127X8 S35	956803514	24	2	521	99 23 398 14	ROLLER SET
DISTANCE SLEEVE	10141438	7	24	234	10 14 144 4	EXHAUST PIPE ASSEMBLY
DISTANCE SLEEVE	11217169	47	6	275	11 24 114 5	ASSEMBLY INSTAL.
DISTANCE TUBE	10517047	8	2	593	79 04 871 14	BOTTOM HOOK BLOCK
DISTANCE TUBE	11493578	14	2	586	79 04 112 14	BOTTOM HOOK BLOCK
DISTANCE WASHER	10226471	14	1	373	59 22 871 14	FRONT WINDOW CPL
DISTANCE WASHER RD30X1	10349263	52	24	284	11 24 409 0	PANELLING SUPERSTR. INSTA
DISTRIBUTOR BLOCK	10151825	5	1	216	10 14 333 9	FUEL LINES
DISTRIBUTOR GEARBOX	11246820	1	1	75	11 24 773 5	HYDR POWER UNIT
DOOR	10565777	1	1	296	10 56 580 8	DOOR
DOOR	10565808	13	1	286	11 24 409 1	COVERS
DOOR	10566237	6	1	286	11 24 409 1	COVERS
DOOR	10566238	1	1	295	10 56 623 7	DOOR
DOOR	10578835	3	1	286	11 24 409 1	COVERS
DOOR	10578836	1	1	290	10 57 883 5	DOOR
DOOR	10578972	1	1	292	10 57 897 6	DOOR
DOOR	10578976	4	5	286	11 24 409 1	COVERS
DOOR	10579397	1	1	294	10 57 940 0	DOOR
DOOR	10579400	5	1	286	11 24 409 1	COVERS
DOOR ACCESSORIES	10226454	2	1	366	10 35 250 8	CABIN
DOOR HANDLE INTERNAL	10226473	19	1	370	10 50 133 3	SLIDING DOOR
DOOR HANDLE INTERNAL	10226478	21	1	370	10 50 133 3	SLIDING DOOR
DOOR LOCK	10353879	20	1	290	10 57 883 5	DOOR
DOOR LOCK	10353879	3	1	292	10 57 897 6	DOOR
DOOR LOCK	10353879	10	1	294	10 57 940 0	DOOR
DOOR LOCK	10353879	10	1	295	10 56 623 7	DOOR
DOOR LOCK	10353879	6	1	296	10 56 580 8	DOOR
DOOR PANE	11279012	1	1	371	10 22 441 3	SLIDING WINDOW
DOOR SEAL	592285714	3	1	370	10 50 133 3	SLIDING DOOR
DOOR WEDGE	790549214	15	9	288	11 24 409 1	COVERS
DOOR WEDGE STOP	790549314	9	1	290	10 57 883 5	DOOR
DOOR WEDGE STOP	790549314	9	1	292	10 57 897 6	DOOR
DOOR WEDGE STOP	790549314	11	1	294	10 57 940 0	DOOR
DOOR WEDGE STOP	790549314	11	1	295	10 56 623 7	DOOR
DOOR WEDGE STOP	790549314	9	1	296	10 56 580 8	DOOR
DOSING PUMP	11110051	4	1	604	11 29 444 5	HEATING RFK
DOUBLE BANJO BOLT 6X6 9S	10014864	7	1	217	10 14 588 5	LEAK OIL RETURN LINE
DOUBLE NON-RETURN VALVE	511607014	6	1	465	10 51 959 1	TUBING HYDR

Description	Item	Pos.	Quantity	Sheet	Assembly	Description
DOUBLE PLUG	10337055	31	1	144	11 22 127 4	PUMP ELEMENT
DOUBLE PLUG	10337055	31	1	154	11 21 593 6	PUMP ELEMENT
DOUBLE PLUG	10337055	28	5	399	11 22 473 8	ADJUSTMENT
DOUBLE PLUG	10424238	30	3	86	11 21 993 0	PUMP HOUSING
DOUBLE PLUG	7012971	29	3	86	11 21 993 0	PUMP HOUSING
DOUBLE PLUG	7012971	31	1	399	11 22 473 8	ADJUSTMENT
DOUBLE PRESSURE LIMITING	10537607	10	2	17	10 35 148 6	VALVE BLOCK
DOUBLE T-MASTER SWITCH	10511274	15	1	2	01 38 281 14	LR 1300 SX
DOUBLE V-PUMP	10118349	4	1	75	11 24 773 5	HYDR POWER UNIT
DOUBLE-ACTING CYL	10099173	2	2	465	10 51 959 1	TUBING HYDR
DOUBLE-ACTING CYL	10227855	1	2	645	10 51 971 2	SELF-LOADING SYSTEM HYD
DOUBLE-ACTING CYL	513313914	10	2	8	11 29 618 6	SUPERSTRUCTURE HYDR
DOUBLE-ACTING CYL	513314114	13	4	392	11 25 903 1	TUBING HYDR
DOUBLE-ACTING CYL	592000814	3	1	689	10 51 728 1	TUBING HYDR
DOUBLE-ACTING CYL	592104114	2	2	66	10 51 969 5	A-FRAME ERECTION HYDR
DOUBLE-ACTING CYL	592104214	2	1	652	10 51 973 8	SELF-LOADING SYSTEM HYD
DOUBLE-ENDED STUD DIN 835	10489376	3	3	222	10 14 736 4	AIR INTAKE ASSEMBLY
DOUBLE-ENDED STUD DIN 835	4901450	4	3	240	10 12 037 2	STARTER INSTALLATION
DOUBLE-ENDED STUD DIN 939	4068017	60	6	48	10 56 073 3	FUEL TANK CPL
DOUBLE-ENDED STUD DIN 93	11690424	10	2	237	10 14 511 2	EXHAUST NOZZLE ATTACHM
DOUBLE-ENDED STUD M16X1.	9275003	20	8	99	10 11 835 7	REPAIR KIT CONNECTION HO
DOWEL PIN DIN 1481 5X16 ST	11226135	170	1	346	51 14 347 14	SG SAFETY BLOCK
DOWEL PIN ISO 13337 8X10 S	4980638	44	2	127	10 12 224 5	REPAIR KIT LEVER
DOWEL PIN ISO 8752 2X6 ST	11001743	6	1	210	10 13 508 0	PRESSURE ADAPTER
DOWEL PIN ISO 8752 5X16	432003714	97	2	451	11 23 820 3	PIVOT PIECE CPL
DOWEL PIN ISO 8752 5X16	432003714	35	2	525	11 24 336 5	PIVOT PIECE NEEDLE CPL
DOWEL PIN ISO 8752 8X16 ST	432008001	78	1	412	96 93 178 01	TRACTION DRIVE
DRAIN HOSE CPL	917665814	31	1	443	10 56 187 5	TOOL EQUIPMENT
DRAIN TAP	11696074	16	1	273	10 30 300 7	FUEL PREFILTER
DRIVE	11893214	4	1	425	10 53 039 8	WINCH
DRIVE	990464514	10	1	337	99 04 941 14	DRIVE UNIT
DRIVE FLANGE	606279014	20	1	424	11 22 050 0	WINCHES INSTALLATION
DRIVE FLANGE	606279014	20	1	439	11 22 050 1	WINCHES INSTALLATION
DRIVE FLANGE	606281114	46	1	28	11 24 519 0	SUPERSTRUCTURE EL
DRIVE SHAFT	944434903	50	1	412	96 93 178 01	TRACTION DRIVE
DRIVE SLEEVE	11223233	4	1	339	99 04 645 14	DRIVE
DRIVE SLEEVE	540272914	4	1	617	54 02 705 14	DRIVE UNIT CPL
DRIVE UNIT	990494114	2	1	318	10 51 969 1	LUG SUPERSTRUCTURE CPL
DRIVE UNIT CPL	540270514	24	1	612	59 20 694 14	WINCH
DRIVER	10348618	13	1	706	10 52 293 0	SG TACHOGENERATOR RFK
DRIVER INSTALLATION	10552681	20	1	6	11 24 047 9	SUPERSTRUCTURE CPL
DRIVER'S SEAT RFK	992197314	721	1	4	01 38 281 14	LR 1300 SX
DRIVERS SEAT AIR-SUSPEN	10043633	2	1	691	99 21 973 14	DRIVER'S SEAT RFK
DRIVERS SEAT EL RFK	992147314	3	1	691	99 21 973 14	DRIVER'S SEAT RFK
DRIVING GEAR	10287664	1	1	154	11 21 593 6	PUMP ELEMENT
DRIVING GEAR	10287725	1	1	155	10 28 766 4	DRIVING GEAR
DRIVING GEAR	10324889	1	1	144	11 22 127 4	PUMP ELEMENT
DRIVING GEAR	10324892	1	1	145	10 32 488 9	DRIVING GEAR
DRIVING GEAR	10503513	1	1	397	51 24 059 14	VARIABLE DISPLACEMENT MO
DRIVING GEAR	11219902	1	1	79	10 53 430 7	V PUMP
DRIVING SHAFT	11219920	1	1	80	11 21 990 2	DRIVING GEAR
DRUM BODY	10227104	1	1	457	61 61 541 14	CABLE DRUM
DRYER	11236711	4	1	700	11 21 750 0	LIQUEFIER
DSF RING	10142429	5	1	190	10 14 351 1	PISTON CPL.
DUST CAP	605013508	51	2	474	10 53 120 7	A-FRAME ELECTRICS
DUST CAP	6203401	1001	1	568	99 38 560 14	CABLE
DUST PLUG	7364491	4	1	22	51 17 042 14	QUICK-FITTING THREAD COU
DUST-PROF COVER	10040064	2	1	227	10 11 676 7	AIR CONDITIONING COMPRES
EARTH CONNECTION PLATE	9080911	4	1	223	90 78 314	HEATING FLANGE ADD-ON
EASY-CHANGE FILTER	10297295	1	2	205	10 14 294 2	LUBE OIL FILTER ASSEMBLY

Description	Item	Pos.	Quantity	Sheet	Assembly	Description
ECCENTRIC SCREW	11267405	46	1	86	11 21 993 0	PUMP HOUSING
EDGE PROTECTION METER W	226016702	29	2.18	300	11 24 922 2	COVER UNDERSIDE
EDGE PROTECTION METER W	226016702	30	1.11	300	11 24 922 2	COVER UNDERSIDE
EDGE PROTECTION METER W	226016702	31	1.19	300	11 24 922 2	COVER UNDERSIDE
EDGE PROTECTION METER W	226016702	33	1.24	300	11 24 922 2	COVER UNDERSIDE
EDGE PROTECTION METER W	226016702	34	1.29	300	11 24 922 2	COVER UNDERSIDE
EDGE PROTECTION METER W	226016702	35	0.57	300	11 24 922 2	COVER UNDERSIDE
EDGE PROTECTION METER W	226016702	36	0.85	300	11 24 922 2	COVER UNDERSIDE
EDGE PROTECTION METER W	226016702	37	1.2	300	11 24 922 2	COVER UNDERSIDE
EDGE PROTECTION METER W	226016702	39	0.36	300	11 24 922 2	COVER UNDERSIDE
EDGE PROTECTION METER W	226016702	40	0.35	300	11 24 922 2	COVER UNDERSIDE
EDGE PROTECTION METER W	226016702	22	0.45	456	91 92 528 14	CABLE DRUM
EDGE PROTECTION METER W	226017802	76	4	451	11 23 820 3	PIVOT PIECE CPL
EDGE PROTECTION METER W	226017802	13	1.132	482	11 24 570 3	BOOM INTERMEDIATE SECTIO
EDGE PROTECTION METER W	226017802	13	1.132	498	11 24 570 9	BOOM INTERMEDIATE SECTIO
EDGE PROTECTION METER W	226017802	13	1.132	504	11 24 571 5	BOOM INTERMEDIATE SECTIO
EDGE SEALING RING	10588729	5	1	467	59 20 224 14	LOAD HOLDING VALVE
ELBOW	10153669	1	1	232	10 14 274 2	COOLANT PIPE BEND ADD-ON
ELBOW	11246836	15	1	264	11 24 114 2	SUCTION UNIT AIR
ELBOW	550900914	16	1	264	11 24 114 2	SUCTION UNIT AIR
ELBOW PIECE	592287714	17	1	373	59 22 871 14	FRONT WINDOW CPL
ELBOW PIECE	7412268	37	2	28	11 24 519 0	SUPERSTRUCTURE EL
ELECTR.CABLE	10870540	251	10.7	34	10 56 645 8	TERMINAL BOX
ELECTR.CABLE	10870540	251	3.42	697	10 56 427 9	WIRING HARNESS
ELECTRONIC MODULES	10685952	31	1	598	10 51 118 5	MODEM RFK
EMERGENCY OPERATION EL	11250162	447	1	3	01 38 281 14	LR 1300 SX
EMERGENCY STOP BUTTON	693073014	33	1	362	11 26 095 7	CONTROL STAND RIGHT
EMERGENCY STOP BUTTON	693073014	33	1	714	10 52 155 9	MODULE REFUELLING SYSTE
EMERGENCY STOP SIGN	606718408	35	1	362	11 26 095 7	CONTROL STAND RIGHT
EMERGENCY SWITCH	606214914	39	3	28	11 24 519 0	SUPERSTRUCTURE EL
ENCLOSURE ADD-ON	605600401	31	1	34	10 56 645 8	TERMINAL BOX
ENCLOSURE CPL	10445126	3	1	453	10 51 826 1	PIVOT PIECE HYDR
ENCLOSURE CPL	10445127	20	2	392	11 25 903 1	TUBING HYDR
END ANGLE	602720514	28	4	34	10 56 645 8	TERMINAL BOX
END ANGLE	602832214	54	1	708	10 56 013 7	MAINS SUPPLY BATTERY
END CAP	11282707	18	1	604	11 29 444 5	HEATING RFK
END COVER	10599796	13	1	259	11 28 734 7	EQUALIZING RESERVOIR
END COVER	11241269	12	1	259	11 28 734 7	EQUALIZING RESERVOIR
END COVER	4001664	3	10	174	10 15 438 6	CRANKCASE CPL.
END COVER	4980362	2	6	174	10 15 438 6	CRANKCASE CPL.
END COVER	4980363	10	3	193	10 13 728 5	CYLINDER HEAD
END COVER	9144757	4	1	196	10 12 653 5	CYLINDER HEAD COVER ASS
END PIECE	10097985	3	2	413	79 05 233 14	CARRYING ROLLER CPL
ENGINE CONTROL SENSORS	10142977	581	1	173	10 14 032 7	DIESEL ENGINE
EQUALIZING RESERVOIR	11287347	11	1	254	11 24 114 0	COOLER INSTALLATION WATE
EQUALIZING RESERVOIR	502800014	7	1	547	10 53 146 1	TUBING HYDR
EQUIPMENT MOUNTING	10445629	1	2	386	11 30 962 5	HOLDER CPL
EVAPORATOR	592293614	230	1	378	59 22 930 14	AIR CONDITIONER
EXHAUST FLAP	10153118	1	1	237	10 14 511 2	EXHAUST NOZZLE ATTACHM
EXHAUST FLAP	11299163	13	1	268	11 24 114 3	EXHAUST GAS SYSTEM
EXHAUST GAS SYSTEM	11241143	40	1	73	11 24 048 0	CENTRAL POWER UNIT
EXHAUST MIXING PIPE	10148669	4	1	268	11 24 114 3	EXHAUST GAS SYSTEM
EXHAUST NOZZLE	10146274	3	1	237	10 14 511 2	EXHAUST NOZZLE ATTACHM
EXHAUST NOZZLE ATTACHM	10145112	432	1	172	10 14 032 7	DIESEL ENGINE
EXHAUST PIPE ASSEMBLY	10141444	410	1	172	10 14 032 7	DIESEL ENGINE
EXHAUST PIPE PRE-ASS.	10141443	1	1	234	10 14 144 4	EXHAUST PIPE ASSEMBLY
EXHAUST SILENCER	553187208	10	1	604	11 29 444 5	HEATING RFK
EXHAUST TAIL PIPE	11248175	7	1	268	11 24 114 3	EXHAUST GAS SYSTEM
EXHAUST TC MOUNTING	10140136	430	1	172	10 14 032 7	DIESEL ENGINE
EXHAUST VALVE SEAT INSER	10128680	7	2	193	10 13 728 5	CYLINDER HEAD

Description	Item	Pos.	Quantity	Sheet	Assembly	Description
EXPANSION VALVE	10223210	170	1	378	59 22 930 14	AIR CONDITIONER
EXTENSION 1 " X 410MM	885392414	45	1	443	10 56 187 5	TOOL EQUIPMENT
EXTENSION CABLE	614027114	74	1	351	11 27 973 6	CABIN EL
FAN	10223209	80	1	378	59 22 930 14	AIR CONDITIONER
FAN	10352188	5	1	26	10 22 592 5	COOLER MOTOR
FAN	11267555	10	1	257	10 57 423 7	COOLER MOTOR
FAN COVER	10223362	10	1	290	10 57 883 5	DOOR
FAN COVER	10565889	2	1	296	10 56 580 8	DOOR
FAN COWL	10352186	2	1	26	10 22 592 5	COOLER MOTOR
FAN MOTOR	11236708	2	1	700	11 21 750 0	LIQUEFIER
FASTENER	10350632	10	1	480	10 35 063 3	FASTENER
FASTENER	10350633	11	2	478	11 28 594 7	SUPPORT CPL
FASTENER	10350633	11	2	496	11 28 619 1	SUPPORT CPL
FASTENER	10350633	11	2	502	11 28 653 4	SUPPORT CPL
FASTENER	10588168	18	1	58	10 58 163 4	CABIN SUSPENSION CPL
FASTENING BRACKET	11219861	10	1	495	11 23 292 2	SUPPORT CPL
FASTENING BS	11230237	44	9	473	11 24 444 4	A-FRAME 1 CPL
FASTENING CLAMP	7362546	55	16	275	11 24 114 5	ASSEMBLY INSTAL.
FASTENING CLAMP	7362551	32	1	604	11 29 444 5	HEATING RFK
FASTENING CLIP	10350978	32	1	75	11 24 773 5	HYDR POWER UNIT
FASTENING DEVICE	10153373	5	1	226	10 14 286 0	AIR COND. COMPRESSOR A
FASTENING SCREW	602134114	59	4	34	10 56 645 8	TERMINAL BOX
FELT STRIP	261100714	12	2	614	54 02 702 14	ROPE DRUM CPL
FEMALE INSERT	605609514	94	1	29	11 24 519 0	SUPERSTRUCTURE EL
FEMALE INSERT	605609514	32	1	34	10 56 645 8	TERMINAL BOX
FEMALE INSERT	605609514	51	1	578	97 14 959 03	HOIST LIMIT SWITCH EL
FEMALE INSERT	605609514	51	1	583	91 95 871 14	HOIST LIMIT SWITCH EL
FEMALE INSERT	605609514	51	1	634	10 51 167 1	LIMIT SWITCH EL
FEMALE INSERT	605612014	42	1	34	10 56 645 8	TERMINAL BOX
FEMALE INSERT	605616114	81	2	566	10 57 624 5	CABLE LOOM
FERRULE	773920008	26	6	515	10 59 863 3	PENDULUM CPL
FERRULE	773920008	13	4	579	11 25 204 2	SUPPORT CPL
FILING DESK	970857103	32	1	282	11 24 409 0	PANELLING SUPERSTR. INSTA
FILLER NECK CONNECTION	10448187	14	1	52	11 27 315 5	CENTRAL GREASING
FILLER SIEVE	10296919	13	1	48	10 56 073 3	FUEL TANK CPL
FILTER	11490265	38	1	86	11 21 993 0	PUMP HOUSING
FILTER	11490265	39	1	86	11 21 993 0	PUMP HOUSING
FILTER	11490265	40	1	86	11 21 993 0	PUMP HOUSING
FILTER	592293714	240	2	378	59 22 930 14	AIR CONDITIONER
FILTER BLOWER INSTALLATIO	611052614	61	1	351	11 27 973 6	CABIN EL
FILTER BRACKET	10152786	1	1	215	10 14 675 3	FUEL FINE FILTER
FILTER ELEMENT	11291031	1	1	266	11 24 679 0	AIR FILTER
FILTER ELEMENT	510713814	1	1	46	51 06 906 14	AERATION FILTER
FILTER ELEMENT	553183708	6	1	273	10 30 300 7	FUEL PREFILTER
FILTER INSERT	10037623	1	1	159	10 22 358 1	PRESSURE FILTER
FILTER INSERT	11227203	2	1	45	10 51 572 4	RETURN FILTER
FILTER MAT	611124514	1	1	364	61 10 526 14	FILTER BLOWER INSTALLATIO
FINAL CONTROL VALVE	10129499	10	1	200	10 12 948 0	OIL COOLER, PRE-ASSEMBLE
FINAL CONTROL VALVE	10138450	14	1	171	10 14 032 7	DIESEL ENGINE
FIRE EXTINGUISHER	890100814	10	1	56	92 65 477 14	FIRE EXTINGUISHER RFK
FIRE EXTINGUISHER MOUNT	10578845	31	2	6	11 24 047 9	SUPERSTRUCTURE CPL
FIRE EXTINGUISHER RFK	926547714	10	1	55	10 57 884 5	FIRE EXTINGUISHER MOUNT
FIRST-AID KIT	789011714	13	1	2	01 38 281 14	LR 1300 SX
FITTED SCREW DIN 609 M10X	485506014	8	2	550	99 31 679 14	SUPPORT SYSTEM CPL
FITTING KEY DIN 6885 B28X1	571827308	400	8	78	11 24 682 0	DISTRIBUTOR GEARBOX
FITTING KEY DIN 6885 B32X18	485529814	410	2	78	11 24 682 0	DISTRIBUTOR GEARBOX
FITTING KEY DIN 6885 B8X7X1	10567120	450	1	78	11 24 682 0	DISTRIBUTOR GEARBOX
FITTINGS	10334218	11	1	238	10 14 622 4	CYCLE VALVE
FITTINGS	9273271	2	2	205	10 14 294 2	LUBE OIL FILTER ASSEMBLY
FITTINGS	942430914	31	4	39	99 14 627 14	HOT-WATER HEATING SUPE

Description	Item	Pos.	Quantity	Sheet	Assembly	Description
FITTINGS	956385814	45	2	275	11 24 114 5	ASSEMBLY INSTAL.
FITTINGS	956385814	35	2	604	11 29 444 5	HEATING RFK
FIXING BAND	501507214	14	1	614	54 02 702 14	ROPE DRUM CPL
FIXING CLAMP	11283913	18	8	485	11 28 390 8	BOOM ACCESS
FIXING CLAMP	11283913	18	9	499	11 28 583 8	BOOM ACCESS
FIXING CLAMP	11283913	18	9	505	11 28 626 1	BOOM ACCESS
FIXING CLAMP	11283913	17	12	509	11 24 132 4	BOOM HEAD CPL
FIXING CLAMP	11283913	52	8	525	11 24 336 5	PIVOT PIECE NEEDLE CPL
FIXING CLAMP	11286679	11	7	553	11 28 978 7	BOOM ACCESS
FIXING CLAMP	11286679	11	6	560	11 28 979 2	BOOM ACCESS
FIXING PARTS	10289973	41	1	380	10 22 506 8	OPERATOR SEAT
FIXING PARTS	10289973	41	1	692	10 04 363 3	DRIVERS SEAT AIR-SUSPEN
FIXING PARTS	10289974	43	1	692	10 04 363 3	DRIVERS SEAT AIR-SUSPEN
FLANGE	10583864	1	1	324	10 55 156 3	WINCH
FLANGE	540271814	1	1	615	54 02 703 14	FLANGE CPL
FLANGE	552066514	22	2	44	10 56 070 1	TANK HYDR CPL
FLANGE	944137814	24	1	75	11 24 773 5	HYDR POWER UNIT
FLANGE	944813514	25	1	75	11 24 773 5	HYDR POWER UNIT
FLANGE	956274314	28	4	8	11 29 618 6	SUPERSTRUCTURE HYDR
FLANGE	959712714	21	1	706	10 52 293 0	SG TACHOGENERATOR RFK
FLANGE BEARING	11231270	3	1	425	10 53 039 8	WINCH
FLANGE COVER	11215698	2	1	152	10 22 601 3	V PUMP
FLANGE COVER	11215699	3	1	152	10 22 601 3	V PUMP
FLANGE CPL	540270314	22	1	612	59 20 694 14	WINCH
FLANGE HALF	510548714	105	8	10	11 29 618 6	SUPERSTRUCTURE HYDR
FLANGE HALF	510574414	100	8	10	11 29 618 6	SUPERSTRUCTURE HYDR
FLANGE HALF	510574414	21	2	167	10 57 532 2	INTAKE PIPE OIL CPL
FLANGE HALF	510586614	103	12	10	11 29 618 6	SUPERSTRUCTURE HYDR
FLANGE HALF	510586614	617	4	321	10 51 968 7	MAIN LUG HYDR
FLANGE HALF	510586614	646	16	394	11 25 903 1	TUBING HYDR
FLANGE HALF	510586614	730	8	435	11 26 260 6	WINCH 1 HYDR
FLANGE HALF	510586614	730	8	441	11 26 261 1	WINCH 2 HYDR
FLANGE HALF	510586914	104	18	10	11 29 618 6	SUPERSTRUCTURE HYDR
FLANGE HALF	510586914	611	4	312	10 51 969 8	NEEDLE LUFFING WINCH HYD
FLANGE HALF	510586914	630	4	344	10 55 216 1	TUBING HYDR
FLANGE HALF	510587514	101	8	10	11 29 618 6	SUPERSTRUCTURE HYDR
FLANGE HALF	510587514	312	2	76	11 24 773 5	HYDR POWER UNIT
FLANGE HALF	510587514	631	8	344	10 55 216 1	TUBING HYDR
FLANGE HALF	510587514	650	2	465	10 51 959 1	TUBING HYDR
FLANGE HALF	510587514	614	2	652	10 51 973 8	SELF-LOADING SYSTEM HYD
FLANGE HALF	511502414	102	24	10	11 29 618 6	SUPERSTRUCTURE HYDR
FLANGE HALF	511502414	310	6	76	11 24 773 5	HYDR POWER UNIT
FLANGE HALF	511502414	20	6	167	10 57 532 2	INTAKE PIPE OIL CPL
FLANGE HALF	511598114	22	2	167	10 57 532 2	INTAKE PIPE OIL CPL
FLANGE JOINT	10035314	20	1	270	11 24 114 4	FUEL SYSTEM
FLANGE JOINT	10225291	710	3	14	11 29 618 6	SUPERSTRUCTURE HYDR
FLANGE JOINT	10531725	616	1	76	11 24 773 5	HYDR POWER UNIT
FLANGE JOINT	10597776	620	4	344	10 55 216 1	TUBING HYDR
FLANGE JOINT	10801399	17	2	237	10 14 511 2	EXHAUST NOZZLE ATTACHM
FLANGE JOINT	10813933	9	2	217	10 14 588 5	LEAK OIL RETURN LINE
FLANGE JOINT	10813934	18	1	237	10 14 511 2	EXHAUST NOZZLE ATTACHM
FLANGE JOINT	10813935	12	2	217	10 14 588 5	LEAK OIL RETURN LINE
FLANGE JOINT	10816958	49	1	275	11 24 114 5	ASSEMBLY INSTAL.
FLANGE JOINT	11002988	9	1	216	10 14 333 9	FUEL LINES
FLANGE JOINT	11067653	8	2	272	10 55 091 1	ADD-ON PRELIMINARY FUEL F
FLANGE JOINT	11229464	3	1	272	10 55 091 1	ADD-ON PRELIMINARY FUEL F
FLANGE JOINT	11262806	10	1	53	11 26 557 2	MOUNTING PARTS
FLANGE JOINT	11657232	36	1	604	11 29 444 5	HEATING RFK
FLANGE JOINT	247000802	30	4	39	99 14 627 14	HOT-WATER HEATING SUPE
FLANGE JOINT	247000902	11	4	275	11 24 114 5	ASSEMBLY INSTAL.

Description	Item	Pos.	Quantity	Sheet	Assembly	Description
FLANGE JOINT	247000902	37	2	604	11 29 444 5	HEATING RFK
FLANGE JOINT	247001802	613	2	652	10 51 973 8	SELF-LOADING SYSTEM HYD
FLANGE JOINT	247009202	649	6	14	11 29 618 6	SUPERSTRUCTURE HYDR
FLANGE JOINT	247009202	606	2	76	11 24 773 5	HYDR POWER UNIT
FLANGE JOINT	247009202	644	1	394	11 25 903 1	TUBING HYDR
FLANGE JOINT	247009202	611	2	453	10 51 826 1	PIVOT PIECE HYDR
FLANGE JOINT	247009402	724	10	16	11 29 618 6	SUPERSTRUCTURE HYDR
FLANGE JOINT	247009402	609	1	66	10 51 969 5	A-FRAME ERECTION HYDR
FLANGE JOINT	247009402	605	4	76	11 24 773 5	HYDR POWER UNIT
FLANGE JOINT	247009402	606	1	312	10 51 969 8	NEEDLE LUFFING WINCH HYD
FLANGE JOINT	247009402	610	1	321	10 51 968 7	MAIN LUG HYDR
FLANGE JOINT	247009402	605	2	344	10 55 216 1	TUBING HYDR
FLANGE JOINT	247009702	612	13	12	11 29 618 6	SUPERSTRUCTURE HYDR
FLANGE JOINT	247009702	608	1	66	10 51 969 5	A-FRAME ERECTION HYDR
FLANGE JOINT	247009702	602	10	76	11 24 773 5	HYDR POWER UNIT
FLANGE JOINT	247009702	21	1	270	11 24 114 4	FUEL SYSTEM
FLANGE JOINT	247009702	604	1	344	10 55 216 1	TUBING HYDR
FLANGE JOINT	247009702	603	4	392	11 25 903 1	TUBING HYDR
FLANGE JOINT	247009702	711	1	435	11 26 260 6	WINCH 1 HYDR
FLANGE JOINT	247009702	711	1	441	11 26 261 1	WINCH 2 HYDR
FLANGE JOINT	247009702	610	3	453	10 51 826 1	PIVOT PIECE HYDR
FLANGE JOINT	247009702	42	1	604	11 29 444 5	HEATING RFK
FLANGE JOINT	247009702	604	1	608	10 51 726 2	TUBING HYDR
FLANGE JOINT	247009702	701	1	662	11 89 408 3	TUBING HYDR
FLANGE JOINT	247009902	675	5	14	11 29 618 6	SUPERSTRUCTURE HYDR
FLANGE JOINT	247009902	610	7	76	11 24 773 5	HYDR POWER UNIT
FLANGE JOINT	247009902	601	6	392	11 25 903 1	TUBING HYDR
FLANGE JOINT	247010102	611	4	12	11 29 618 6	SUPERSTRUCTURE HYDR
FLANGE JOINT	247010102	604	4	76	11 24 773 5	HYDR POWER UNIT
FLANGE JOINT	247010102	609	2	453	10 51 826 1	PIVOT PIECE HYDR
FLANGE JOINT	247011602	610	1	12	11 29 618 6	SUPERSTRUCTURE HYDR
FLANGE JOINT	247011602	307	1	76	11 24 773 5	HYDR POWER UNIT
FLANGE JOINT	247011602	22	1	270	11 24 114 4	FUEL SYSTEM
FLANGE JOINT	247011602	613	2	394	11 25 903 1	TUBING HYDR
FLANGE JOINT	247011602	603	1	453	10 51 826 1	PIVOT PIECE HYDR
FLANGE JOINT	247020902	654	3	14	11 29 618 6	SUPERSTRUCTURE HYDR
FLANGE JOINT	247021802	24	3	275	11 24 114 5	ASSEMBLY INSTAL.
FLANGE JOINT	247027002	716	1	14	11 29 618 6	SUPERSTRUCTURE HYDR
FLANGE JOINT	247027202	609	1	12	11 29 618 6	SUPERSTRUCTURE HYDR
FLANGE JOINT	247027302	718	2	14	11 29 618 6	SUPERSTRUCTURE HYDR
FLANGE JOINT	247027302	32	2	275	11 24 114 5	ASSEMBLY INSTAL.
FLANGE JOINT	247027302	602	4	392	11 25 903 1	TUBING HYDR
FLANGE JOINT	247027402	606	1	453	10 51 826 1	PIVOT PIECE HYDR
FLANGE JOINT	247040302	680	1	14	11 29 618 6	SUPERSTRUCTURE HYDR
FLANGE JOINT	247040302	605	1	312	10 51 969 8	NEEDLE LUFFING WINCH HYD
FLANGE JOINT	247040902	739	2	16	11 29 618 6	SUPERSTRUCTURE HYDR
FLANGE JOINT	247040902	34	2	275	11 24 114 5	ASSEMBLY INSTAL.
FLANGE JOINT	247041102	203	1	12	11 29 618 6	SUPERSTRUCTURE HYDR
FLANGE JOINT	247041102	608	3	76	11 24 773 5	HYDR POWER UNIT
FLANGE JOINT	247041102	608	4	392	11 25 903 1	TUBING HYDR
FLANGE JOINT	247041402	607	3	76	11 24 773 5	HYDR POWER UNIT
FLANGE JOINT	247041502	749	2	16	11 29 618 6	SUPERSTRUCTURE HYDR
FLANGE JOINT	247041502	30	2	275	11 24 114 5	ASSEMBLY INSTAL.
FLANGE JOINT	247042402	681	4	14	11 29 618 6	SUPERSTRUCTURE HYDR
FLANGE JOINT	247042402	611	6	394	11 25 903 1	TUBING HYDR
FLANGE JOINT	247042402	605	1	652	10 51 973 8	SELF-LOADING SYSTEM HYD
FLANGE JOINT	247042402	607	1	689	10 51 728 1	TUBING HYDR
FLANGE JOINT	247042502	746	2	16	11 29 618 6	SUPERSTRUCTURE HYDR
FLANGE JOINT	247042702	607	1	12	11 29 618 6	SUPERSTRUCTURE HYDR
FLANGE JOINT	247042702	605	1	453	10 51 826 1	PIVOT PIECE HYDR

Description	Item	Pos.	Quantity	Sheet	Assembly	Description
FLANGE JOINT	247042702	614	1	547	10 53 146 1	TUBING HYDR
FLANGE JOINT	247043002	610	1	547	10 53 146 1	TUBING HYDR
FLANGE JOINT	247043102	606	2	12	11 29 618 6	SUPERSTRUCTURE HYDR
FLANGE JOINT	247043102	614	2	76	11 24 773 5	HYDR POWER UNIT
FLANGE JOINT	247043102	23	2	270	11 24 114 4	FUEL SYSTEM
FLANGE JOINT	247043102	33	1	604	11 29 444 5	HEATING RFK
FLANGE JOINT	247043202	615	2	66	10 51 969 5	A-FRAME ERECTION HYDR
FLANGE JOINT	247043502	613	2	76	11 24 773 5	HYDR POWER UNIT
FLANGE JOINT	247043702	609	1	547	10 53 146 1	TUBING HYDR
FLANGE JOINT	247044302	652	2	76	11 24 773 5	HYDR POWER UNIT
FLANGE JOINT	247048502	27	3	275	11 24 114 5	ASSEMBLY INSTAL.
FLANGE JOINT	247048702	603	1	547	10 53 146 1	TUBING HYDR
FLANGE JOINT	247048702	38	1	604	11 29 444 5	HEATING RFK
FLANGE JOINT	247048802	625	6	12	11 29 618 6	SUPERSTRUCTURE HYDR
FLANGE JOINT	247048802	613	2	453	10 51 826 1	PIVOT PIECE HYDR
FLANGE JOINT	247049002	618	1	12	11 29 618 6	SUPERSTRUCTURE HYDR
FLANGE JOINT	247049002	33	2	275	11 24 114 5	ASSEMBLY INSTAL.
FLANGE JOINT	247049002	22	1	392	11 25 903 1	TUBING HYDR
FLANGE JOINT	247049002	44	2	604	11 29 444 5	HEATING RFK
FLANGE JOINT	247049102	627	2	12	11 29 618 6	SUPERSTRUCTURE HYDR
FLANGE JOINT	247049102	33	4	39	99 14 627 14	HOT-WATER HEATING SUPE
FLANGE JOINT	247049102	617	1	76	11 24 773 5	HYDR POWER UNIT
FLANGE JOINT	247049102	204	2	453	10 51 826 1	PIVOT PIECE HYDR
FLANGE JOINT	247049202	631	1	14	11 29 618 6	SUPERSTRUCTURE HYDR
FLANGE JOINT	247091002	302	1	75	11 24 773 5	HYDR POWER UNIT
FLANGE JOINT	247105602	732	1	16	11 29 618 6	SUPERSTRUCTURE HYDR
FLANGE JOINT	247108302	734	4	16	11 29 618 6	SUPERSTRUCTURE HYDR
FLANGE JOINT	247108302	612	8	76	11 24 773 5	HYDR POWER UNIT
FLANGE JOINT	247108302	24	4	270	11 24 114 4	FUEL SYSTEM
FLANGE JOINT	247108302	641	1	394	11 25 903 1	TUBING HYDR
FLANGE JOINT	247112702	624	9	12	11 29 618 6	SUPERSTRUCTURE HYDR
FLANGE JOINT	247112702	202	2	66	10 51 969 5	A-FRAME ERECTION HYDR
FLANGE JOINT	247112702	686	4	76	11 24 773 5	HYDR POWER UNIT
FLANGE JOINT	247112702	603	2	344	10 55 216 1	TUBING HYDR
FLANGE JOINT	247112702	201	2	453	10 51 826 1	PIVOT PIECE HYDR
FLANGE JOINT	247112702	706	2	645	10 51 971 2	SELF-LOADING SYSTEM HYD
FLANGE JOINT	247116402	605	3	12	11 29 618 6	SUPERSTRUCTURE HYDR
FLANGE JOINT	247116402	607	6	453	10 51 826 1	PIVOT PIECE HYDR
FLANGE JOINT	247117302	752	15	16	11 29 618 6	SUPERSTRUCTURE HYDR
FLANGE JOINT	247117302	616	1	66	10 51 969 5	A-FRAME ERECTION HYDR
FLANGE JOINT	247117302	628	1	76	11 24 773 5	HYDR POWER UNIT
FLANGE JOINT	247117302	600	4	344	10 55 216 1	TUBING HYDR
FLANGE JOINT	247117302	707	2	645	10 51 971 2	SELF-LOADING SYSTEM HYD
FLANGE JOINT	247117302	203	1	652	10 51 973 8	SELF-LOADING SYSTEM HYD
FLANGE JOINT	247117302	705	2	662	11 89 408 3	TUBING HYDR
FLANGE JOINT	247117702	704	9	14	11 29 618 6	SUPERSTRUCTURE HYDR
FLANGE JOINT	247117702	308	1	76	11 24 773 5	HYDR POWER UNIT
FLANGE JOINT	247117702	35	1	254	11 24 114 0	COOLER INSTALLATION WATE
FLANGE JOINT	247117702	10	1	275	11 24 114 5	ASSEMBLY INSTAL.
FLANGE JOINT	247117702	204	4	344	10 55 216 1	TUBING HYDR
FLANGE JOINT	247117702	632	1	394	11 25 903 1	TUBING HYDR
FLANGE JOINT	247121102	727	1	16	11 29 618 6	SUPERSTRUCTURE HYDR
FLANGE JOINT	247126202	735	5	16	11 29 618 6	SUPERSTRUCTURE HYDR
FLANGE JOINT	247126202	641	5	76	11 24 773 5	HYDR POWER UNIT
FLANGE JOINT	247126202	35	2	275	11 24 114 5	ASSEMBLY INSTAL.
FLANGE JOINT	247126202	610	3	394	11 25 903 1	TUBING HYDR
FLANGE JOINT	247128402	626	8	12	11 29 618 6	SUPERSTRUCTURE HYDR
FLANGE JOINT	247128402	627	6	76	11 24 773 5	HYDR POWER UNIT
FLANGE JOINT	247128402	608	4	344	10 55 216 1	TUBING HYDR
FLANGE JOINT	247128402	708	2	645	10 51 971 2	SELF-LOADING SYSTEM HYD

Description	Item	Pos.	Quantity	Sheet	Assembly	Description
FLANGE JOINT	247128502	731	2	16	11 29 618 6	SUPERSTRUCTURE HYDR
FLANGE JOINT	247128502	604	1	312	10 51 969 8	NEEDLE LUFFING WINCH HYD
FLANGE JOINT	247128502	605	4	392	11 25 903 1	TUBING HYDR
FLANGE JOINT	247128502	614	1	608	10 51 726 2	TUBING HYDR
FLANGE JOINT	247128602	653	4	14	11 29 618 6	SUPERSTRUCTURE HYDR
FLANGE JOINT	247128602	625	1	76	11 24 773 5	HYDR POWER UNIT
FLANGE JOINT	247128602	16	1	275	11 24 114 5	ASSEMBLY INSTAL.
FLANGE JOINT	247128602	605	1	321	10 51 968 7	MAIN LUG HYDR
FLANGE JOINT	247128602	602	1	344	10 55 216 1	TUBING HYDR
FLANGE JOINT	247128602	648	2	394	11 25 903 1	TUBING HYDR
FLANGE JOINT	247138602	729	3	16	11 29 618 6	SUPERSTRUCTURE HYDR
FLANGE JOINT	247138602	692	1	76	11 24 773 5	HYDR POWER UNIT
FLANGE JOINT	247138602	19	2	275	11 24 114 5	ASSEMBLY INSTAL.
FLANGE JOINT	247138602	609	4	392	11 25 903 1	TUBING HYDR
FLANGE JOINT	247142002	653	2	76	11 24 773 5	HYDR POWER UNIT
FLANGE JOINT	247232702	660	2	14	11 29 618 6	SUPERSTRUCTURE HYDR
FLANGE JOINT	247242302	629	11	12	11 29 618 6	SUPERSTRUCTURE HYDR
FLANGE JOINT	247242302	638	2	394	11 25 903 1	TUBING HYDR
FLANGE JOINT	247242302	40	1	604	11 29 444 5	HEATING RFK
FLANGE JOINT	247261802	708	3	14	11 29 618 6	SUPERSTRUCTURE HYDR
FLANGE JOINT	247261802	621	1	76	11 24 773 5	HYDR POWER UNIT
FLANGE JOINT	470002414	700	1	445	91 90 239 14	CABLE HYDR
FLANGE JOINT	470700714	611	1	547	10 53 146 1	TUBING HYDR
FLANGE JOINT	470701414	691	1	76	11 24 773 5	HYDR POWER UNIT
FLANGE JOINT	470905214	36	1	254	11 24 114 0	COOLER INSTALLATION WATE
FLANGE JOINT	470905714	37	3	254	11 24 114 0	COOLER INSTALLATION WATE
FLANGE JOINT	471004514	602	11	12	11 29 618 6	SUPERSTRUCTURE HYDR
FLANGE JOINT	471004514	605	1	66	10 51 969 5	A-FRAME ERECTION HYDR
FLANGE JOINT	471004514	620	1	76	11 24 773 5	HYDR POWER UNIT
FLANGE JOINT	471004514	617	6	394	11 25 903 1	TUBING HYDR
FLANGE JOINT	471004514	703	2	645	10 51 971 2	SELF-LOADING SYSTEM HYD
FLANGE JOINT	471004514	611	1	652	10 51 973 8	SELF-LOADING SYSTEM HYD
FLANGE JOINT	471004514	605	2	689	10 51 728 1	TUBING HYDR
FLANGE JOINT	471004614	619	2	76	11 24 773 5	HYDR POWER UNIT
FLANGE JOINT	471004614	603	2	312	10 51 969 8	NEEDLE LUFFING WINCH HYD
FLANGE JOINT	471004614	607	2	321	10 51 968 7	MAIN LUG HYDR
FLANGE JOINT	471004614	618	2	394	11 25 903 1	TUBING HYDR
FLANGE JOINT	471004614	708	1	435	11 26 260 6	WINCH 1 HYDR
FLANGE JOINT	471004614	708	1	441	11 26 261 1	WINCH 2 HYDR
FLANGE JOINT	471007014	706	4	14	11 29 618 6	SUPERSTRUCTURE HYDR
FLANGE JOINT	471007014	619	1	344	10 55 216 1	TUBING HYDR
FLANGE JOINT	471008014	677	3	76	11 24 773 5	HYDR POWER UNIT
FLANGE JOINT	471008214	601	3	12	11 29 618 6	SUPERSTRUCTURE HYDR
FLANGE JOINT	471008214	611	8	76	11 24 773 5	HYDR POWER UNIT
FLANGE JOINT	471008214	612	8	394	11 25 903 1	TUBING HYDR
FLANGE JOINT	471008214	709	1	435	11 26 260 6	WINCH 1 HYDR
FLANGE JOINT	471008214	709	1	441	11 26 261 1	WINCH 2 HYDR
FLANGE JOINT	471016401	590	2	78	11 24 682 0	DISTRIBUTOR GEARBOX
FLANGE JOINT	471030508	600	3	12	11 29 618 6	SUPERSTRUCTURE HYDR
FLANGE JOINT	471030508	678	1	76	11 24 773 5	HYDR POWER UNIT
FLANGE JOINT	471030608	603	12	12	11 29 618 6	SUPERSTRUCTURE HYDR
FLANGE JOINT	471030608	614	1	66	10 51 969 5	A-FRAME ERECTION HYDR
FLANGE JOINT	471030608	637	2	394	11 25 903 1	TUBING HYDR
FLANGE JOINT	471030708	737	1	16	11 29 618 6	SUPERSTRUCTURE HYDR
FLANGE JOINT	471030708	710	1	435	11 26 260 6	WINCH 1 HYDR
FLANGE JOINT	471030708	710	1	441	11 26 261 1	WINCH 2 HYDR
FLANGE JOINT	471031108	672	1	76	11 24 773 5	HYDR POWER UNIT
FLANGE JOINT	471031108	654	1	394	11 25 903 1	TUBING HYDR
FLANGE JOINT	471031308	632	2	76	11 24 773 5	HYDR POWER UNIT
FLANGE JOINT	471031308	616	2	394	11 25 903 1	TUBING HYDR

Description	Item	Pos.	Quantity	Sheet	Assembly	Description
FLANGE JOINT	471031508	631	3	76	11 24 773 5	HYDR POWER UNIT
FLANGE JOINT	471031508	31	2	275	11 24 114 5	ASSEMBLY INSTAL.
FLANGE JOINT	471031808	680	2	76	11 24 773 5	HYDR POWER UNIT
FLANGE JOINT	471032108	610	2	652	10 51 973 8	SELF-LOADING SYSTEM HYD
FLANGE JOINT	471032608	622	1	12	11 29 618 6	SUPERSTRUCTURE HYDR
FLANGE JOINT	471032608	604	2	66	10 51 969 5	A-FRAME ERECTION HYDR
FLANGE JOINT	471032608	615	6	394	11 25 903 1	TUBING HYDR
FLANGE JOINT	471032608	606	2	465	10 51 959 1	TUBING HYDR
FLANGE JOINT	471032608	608	2	547	10 53 146 1	TUBING HYDR
FLANGE JOINT	471032608	700	8	668	11 23 524 8	TUBING HYDR
FLANGE JOINT	471032608	600	1	674	10 55 459 4	TUBING HYDR
FLANGE JOINT	471032708	658	4	14	11 29 618 6	SUPERSTRUCTURE HYDR
FLANGE JOINT	471032708	603	2	66	10 51 969 5	A-FRAME ERECTION HYDR
FLANGE JOINT	471032708	600	24	392	11 25 903 1	TUBING HYDR
FLANGE JOINT	471032708	627	2	465	10 51 959 1	TUBING HYDR
FLANGE JOINT	471032708	607	1	547	10 53 146 1	TUBING HYDR
FLANGE JOINT	471032708	704	2	645	10 51 971 2	SELF-LOADING SYSTEM HYD
FLANGE JOINT	471032708	703	8	662	11 89 408 3	TUBING HYDR
FLANGE JOINT	471032708	609	1	689	10 51 728 1	TUBING HYDR
FLANGE JOINT	471032808	621	27	12	11 29 618 6	SUPERSTRUCTURE HYDR
FLANGE JOINT	471032808	630	3	76	11 24 773 5	HYDR POWER UNIT
FLANGE JOINT	471032808	602	3	312	10 51 969 8	NEEDLE LUFFING WINCH HYD
FLANGE JOINT	471032808	609	3	321	10 51 968 7	MAIN LUG HYDR
FLANGE JOINT	471032808	622	2	394	11 25 903 1	TUBING HYDR
FLANGE JOINT	471032808	701	1	445	91 90 239 14	CABLE HYDR
FLANGE JOINT	471032808	600	1	689	10 51 728 1	TUBING HYDR
FLANGE JOINT	471032908	616	1	12	11 29 618 6	SUPERSTRUCTURE HYDR
FLANGE JOINT	471033014	629	1	76	11 24 773 5	HYDR POWER UNIT
FLANGE JOINT	471033014	601	1	312	10 51 969 8	NEEDLE LUFFING WINCH HYD
FLANGE JOINT	471033014	651	2	394	11 25 903 1	TUBING HYDR
FLANGE JOINT	471033014	602	2	608	10 51 726 2	TUBING HYDR
FLANGE JOINT	471033114	707	1	14	11 29 618 6	SUPERSTRUCTURE HYDR
FLANGE JOINT	471033114	606	3	547	10 53 146 1	TUBING HYDR
FLANGE JOINT	471033214	722	2	16	11 29 618 6	SUPERSTRUCTURE HYDR
FLANGE JOINT	471033214	636	1	394	11 25 903 1	TUBING HYDR
FLANGE JOINT	471033214	608	3	453	10 51 826 1	PIVOT PIECE HYDR
FLANGE JOINT	471033214	605	3	465	10 51 959 1	TUBING HYDR
FLANGE JOINT	471033214	605	5	547	10 53 146 1	TUBING HYDR
FLANGE JOINT	471033214	603	2	608	10 51 726 2	TUBING HYDR
FLANGE JOINT	471033214	709	2	645	10 51 971 2	SELF-LOADING SYSTEM HYD
FLANGE JOINT	471033214	704	1	662	11 89 408 3	TUBING HYDR
FLANGE JOINT	471033314	606	1	321	10 51 968 7	MAIN LUG HYDR
FLANGE JOINT	471033414	725	1	16	11 29 618 6	SUPERSTRUCTURE HYDR
FLANGE JOINT	471033614	738	1	16	11 29 618 6	SUPERSTRUCTURE HYDR
FLANGE JOINT	471033614	604	1	547	10 53 146 1	TUBING HYDR
FLANGE JOINT	471034414	726	2	16	11 29 618 6	SUPERSTRUCTURE HYDR
FLANGE JOINT	471034414	612	2	344	10 55 216 1	TUBING HYDR
FLANGE JOINT	471034414	604	2	453	10 51 826 1	PIVOT PIECE HYDR
FLANGE JOINT	471034708	672	4	14	11 29 618 6	SUPERSTRUCTURE HYDR
FLANGE JOINT	471034708	637	1	76	11 24 773 5	HYDR POWER UNIT
FLANGE JOINT	471034714	25	2	270	11 24 114 4	FUEL SYSTEM
FLANGE JOINT	471034714	600	1	312	10 51 969 8	NEEDLE LUFFING WINCH HYD
FLANGE JOINT	471036014	652	2	394	11 25 903 1	TUBING HYDR
FLANGE JOINT	471039408	612	1	321	10 51 968 7	MAIN LUG HYDR
FLANGE JOINT	471039408	611	2	344	10 55 216 1	TUBING HYDR
FLANGE JOINT	471039708	618	2	344	10 55 216 1	TUBING HYDR
FLANGE JOINT	471039708	600	1	608	10 51 726 2	TUBING HYDR
FLANGE JOINT	471039908	635	3	76	11 24 773 5	HYDR POWER UNIT
FLANGE JOINT	471039908	655	2	394	11 25 903 1	TUBING HYDR
FLANGE JOINT	471100114	617	3	12	11 29 618 6	SUPERSTRUCTURE HYDR

Description	Item	Pos.	Quantity	Sheet	Assembly	Description
FLANGE JOINT	471100114	604	2	465	10 51 959 1	TUBING HYDR
FLANGE JOINT	471100414	608	2	12	11 29 618 6	SUPERSTRUCTURE HYDR
FLANGE JOINT	471100614	620	2	394	11 25 903 1	TUBING HYDR
FLANGE JOINT	471100714	756	1	16	11 29 618 6	SUPERSTRUCTURE HYDR
FLANGE JOINT	471100714	603	1	465	10 51 959 1	TUBING HYDR
FLANGE JOINT	472531508	723	1	16	11 29 618 6	SUPERSTRUCTURE HYDR
FLANGE JOINT	472531508	624	2	465	10 51 959 1	TUBING HYDR
FLANGE JOINT	472531508	608	3	652	10 51 973 8	SELF-LOADING SYSTEM HYD
FLANGE JOINT	473210214	632	1	465	10 51 959 1	TUBING HYDR
FLANGE JOINT	473210214	607	3	652	10 51 973 8	SELF-LOADING SYSTEM HYD
FLANGE JOINT	473210214	700	1	662	11 89 408 3	TUBING HYDR
FLANGE JOINT	473231214	633	1	465	10 51 959 1	TUBING HYDR
FLANGE JOINT	474001214	760	1	16	11 29 618 6	SUPERSTRUCTURE HYDR
FLANGE JOINT	474002314	620	4	12	11 29 618 6	SUPERSTRUCTURE HYDR
FLANGE JOINT	474002414	744	2	16	11 29 618 6	SUPERSTRUCTURE HYDR
FLANGE JOINT	474002414	614	4	394	11 25 903 1	TUBING HYDR
FLANGE JOINT	474032614	628	3	12	11 29 618 6	SUPERSTRUCTURE HYDR
FLANGE JOINT	474032614	602	4	453	10 51 826 1	PIVOT PIECE HYDR
FLANGE JOINT	474032614	600	8	465	10 51 959 1	TUBING HYDR
FLANGE JOINT	474032714	650	2	14	11 29 618 6	SUPERSTRUCTURE HYDR
FLANGE JOINT	474032914	636	2	14	11 29 618 6	SUPERSTRUCTURE HYDR
FLANGE JOINT	474033014	719	4	14	11 29 618 6	SUPERSTRUCTURE HYDR
FLANGE JOINT	474033014	647	8	394	11 25 903 1	TUBING HYDR
FLANGE JOINT	474033014	714	2	435	11 26 260 6	WINCH 1 HYDR
FLANGE JOINT	474033014	714	2	441	11 26 261 1	WINCH 2 HYDR
FLANGE JOINT	474033014	601	4	453	10 51 826 1	PIVOT PIECE HYDR
FLANGE JOINT	475002514	628	2	465	10 51 959 1	TUBING HYDR
FLANGE JOINT	475033014	609	3	652	10 51 973 8	SELF-LOADING SYSTEM HYD
FLANGE JOINT	475033614	619	1	465	10 51 959 1	TUBING HYDR
FLANGE JOINT	475501414	635	2	14	11 29 618 6	SUPERSTRUCTURE HYDR
FLANGE JOINT	475501414	604	4	392	11 25 903 1	TUBING HYDR
FLANGE JOINT	475501914	685	1	76	11 24 773 5	HYDR POWER UNIT
FLANGE JOINT	475501914	606	1	652	10 51 973 8	SELF-LOADING SYSTEM HYD
FLANGE JOINT	475502514	625	4	394	11 25 903 1	TUBING HYDR
FLANGE JOINT	476608008	39	1	254	11 24 114 0	COOLER INSTALLATION WATE
FLANGE JOINT	477102614	32	4	39	99 14 627 14	HOT-WATER HEATING SUPE
FLANGE JOINT	477102814	57	4	275	11 24 114 5	ASSEMBLY INSTAL.
FLANGE JOINT	477102814	39	2	604	11 29 444 5	HEATING RFK
FLANGE JOINT	477400314	690	2	76	11 24 773 5	HYDR POWER UNIT
FLANGE JOINT	477400314	702	1	445	91 90 239 14	CABLE HYDR
FLANGE JOINT	477400414	673	1	465	10 51 959 1	TUBING HYDR
FLANGE JOINT	477400414	605	8	668	11 23 524 8	TUBING HYDR
FLANGE JOINT	477400614	208	2	453	10 51 826 1	PIVOT PIECE HYDR
FLANGE JOINT	477400714	633	2	14	11 29 618 6	SUPERSTRUCTURE HYDR
FLANGE JOINT	477400814	624	4	344	10 55 216 1	TUBING HYDR
FLANGE JOINT	477401014	202	4	453	10 51 826 1	PIVOT PIECE HYDR
FLANGE JOINT	477700114	639	2	14	11 29 618 6	SUPERSTRUCTURE HYDR
FLANGE JOINT	477700114	655	1	76	11 24 773 5	HYDR POWER UNIT
FLANGE JOINT	477700114	614	2	453	10 51 826 1	PIVOT PIECE HYDR
FLANGE JOINT	477700214	619	1	12	11 29 618 6	SUPERSTRUCTURE HYDR
FLANGE JOINT	477700214	23	1	392	11 25 903 1	TUBING HYDR
FLANGE JOINT	477700414	689	2	76	11 24 773 5	HYDR POWER UNIT
FLANGE JOINT	477700414	703	1	445	91 90 239 14	CABLE HYDR
FLANGE JOINT	477700414	206	1	547	10 53 146 1	TUBING HYDR
FLANGE JOINT	477700414	41	1	604	11 29 444 5	HEATING RFK
FLANGE JOINT	477700514	638	6	14	11 29 618 6	SUPERSTRUCTURE HYDR
FLANGE JOINT	477700514	612	2	453	10 51 826 1	PIVOT PIECE HYDR
FLANGE JOINT	477700514	202	1	465	10 51 959 1	TUBING HYDR
FLANGE JOINT	477700514	606	8	668	11 23 524 8	TUBING HYDR
FLANGE JOINT	477700814	634	1	14	11 29 618 6	SUPERSTRUCTURE HYDR

Description	Item	Pos.	Quantity	Sheet	Assembly	Description
FLANGE JOINT	477701114	207	2	453	10 51 826 1	PIVOT PIECE HYDR
FLANGE JOINT	477701414	632	2	14	11 29 618 6	SUPERSTRUCTURE HYDR
FLANGE JOINT	477701514	625	4	344	10 55 216 1	TUBING HYDR
FLANGE JOINT	477701814	211	4	453	10 51 826 1	PIVOT PIECE HYDR
FLANGE JOINT	477704514	650	1	394	11 25 903 1	TUBING HYDR
FLANGE JOINT	477704614	720	3	14	11 29 618 6	SUPERSTRUCTURE HYDR
FLANGE JOINT	477704614	19	1	44	10 56 070 1	TANK HYDR CPL
FLANGE JOINT	477704614	17	5	48	10 56 073 3	FUEL TANK CPL
FLANGE JOINT	477704614	300	1	75	11 24 773 5	HYDR POWER UNIT
FLANGE JOINT	477704914	306	1	76	11 24 773 5	HYDR POWER UNIT
FLANGE JOINT	477704914	32	1	167	10 57 532 2	INTAKE PIPE OIL CPL
FLANGE JOINT	477704914	38	4	254	11 24 114 0	COOLER INSTALLATION WATE
FLANGE JOINT	477704914	64	2	264	11 24 114 2	SUCTION UNIT AIR
FLANGE JOINT	477705114	202	1	321	10 51 968 7	MAIN LUG HYDR
FLANGE JOINT	477705214	58	1	275	11 24 114 5	ASSEMBLY INSTAL.
FLANGE JOINT	481930314	612	1	652	10 51 973 8	SELF-LOADING SYSTEM HYD
FLANGE JOINT	481930414	630	3	12	11 29 618 6	SUPERSTRUCTURE HYDR
FLANGE JOINT	481930414	624	2	394	11 25 903 1	TUBING HYDR
FLANGE JOINT	481930414	704	1	445	91 90 239 14	CABLE HYDR
FLANGE JOINT	481930514	703	1	435	11 26 260 6	WINCH 1 HYDR
FLANGE JOINT	481930514	703	1	441	11 26 261 1	WINCH 2 HYDR
FLANGE JOINT	481930614	622	1	465	10 51 959 1	TUBING HYDR
FLANGE JOINT	481930614	602	3	547	10 53 146 1	TUBING HYDR
FLANGE JOINT	481930714	604	1	652	10 51 973 8	SELF-LOADING SYSTEM HYD
FLANGE JOINT	481930814	601	1	547	10 53 146 1	TUBING HYDR
FLANGE JOINT	481931114	761	1	16	11 29 618 6	SUPERSTRUCTURE HYDR
FLANGE JOINT	481931614	687	1	76	11 24 773 5	HYDR POWER UNIT
FLANGE JOINT	481933014	623	4	394	11 25 903 1	TUBING HYDR
FLANGE JOINT	482330814	730	1	16	11 29 618 6	SUPERSTRUCTURE HYDR
FLANGE JOINT	482330814	675	1	76	11 24 773 5	HYDR POWER UNIT
FLANGE JOINT	482331114	603	3	652	10 51 973 8	SELF-LOADING SYSTEM HYD
FLANGE JOINT	482331914	721	3	16	11 29 618 6	SUPERSTRUCTURE HYDR
FLANGE JOINT	482331914	600	2	453	10 51 826 1	PIVOT PIECE HYDR
FLANGE JOINT	482430314	693	1	14	11 29 618 6	SUPERSTRUCTURE HYDR
FLANGE JOINT	482430314	201	1	344	10 55 216 1	TUBING HYDR
FLANGE JOINT	482430614	606	2	392	11 25 903 1	TUBING HYDR
FLANGE JOINT	482431214	602	1	652	10 51 973 8	SELF-LOADING SYSTEM HYD
FLANGE JOINT	482431314	204	1	12	11 29 618 6	SUPERSTRUCTURE HYDR
FLANGE JOINT	482431314	643	2	76	11 24 773 5	HYDR POWER UNIT
FLANGE JOINT	482431314	705	1	435	11 26 260 6	WINCH 1 HYDR
FLANGE JOINT	482431314	705	1	441	11 26 261 1	WINCH 2 HYDR
FLANGE JOINT	482431414	706	1	435	11 26 260 6	WINCH 1 HYDR
FLANGE JOINT	482431414	706	1	441	11 26 261 1	WINCH 2 HYDR
FLANGE JOINT	482431514	671	1	465	10 51 959 1	TUBING HYDR
FLANGE JOINT	482431714	623	4	344	10 55 216 1	TUBING HYDR
FLANGE JOINT	482530814	755	2	16	11 29 618 6	SUPERSTRUCTURE HYDR
FLANGE JOINT	482530814	660	1	76	11 24 773 5	HYDR POWER UNIT
FLANGE JOINT	482530914	736	1	16	11 29 618 6	SUPERSTRUCTURE HYDR
FLANGE JOINT	482530914	301	2	75	11 24 773 5	HYDR POWER UNIT
FLANGE JOINT	482531614	615	1	12	11 29 618 6	SUPERSTRUCTURE HYDR
FLANGE JOINT	482531814	652	2	14	11 29 618 6	SUPERSTRUCTURE HYDR
FLANGE JOINT	482531814	649	4	394	11 25 903 1	TUBING HYDR
FLANGE JOINT	485430714	748	1	16	11 29 618 6	SUPERSTRUCTURE HYDR
FLANGE JOINT	485431214	714	2	14	11 29 618 6	SUPERSTRUCTURE HYDR
FLANGE JOINT	485431214	683	3	76	11 24 773 5	HYDR POWER UNIT
FLANGE JOINT	485431314	666	4	14	11 29 618 6	SUPERSTRUCTURE HYDR
FLANGE JOINT	485431414	205	1	12	11 29 618 6	SUPERSTRUCTURE HYDR
FLANGE JOINT	485432814	759	1	16	11 29 618 6	SUPERSTRUCTURE HYDR
FLANGE JOINT	485432914	600	1	547	10 53 146 1	TUBING HYDR
FLANGE JOINT	485433314	684	1	76	11 24 773 5	HYDR POWER UNIT

Description	Item	Pos.	Quantity	Sheet	Assembly	Description
FLANGE JOINT	485433314	713	2	435	11 26 260 6	WINCH 1 HYDR
FLANGE JOINT	485433314	713	2	441	11 26 261 1	WINCH 2 HYDR
FLANGE JOINT	485433314	613	8	465	10 51 959 1	TUBING HYDR
FLANGE JOINT	485433314	615	2	608	10 51 726 2	TUBING HYDR
FLANGE JOINT	485433314	710	2	645	10 51 971 2	SELF-LOADING SYSTEM HYD
FLANGE JOINT	485433414	758	1	16	11 29 618 6	SUPERSTRUCTURE HYDR
FLANGE JOINT	485433414	705	1	445	91 90 239 14	CABLE HYDR
FLANGE JOINT	485433414	629	2	465	10 51 959 1	TUBING HYDR
FLANGE JOINT	485433414	612	2	547	10 53 146 1	TUBING HYDR
FLANGE JOINT	485433514	610	1	66	10 51 969 5	A-FRAME ERECTION HYDR
FLANGE JOINT	485433514	630	1	465	10 51 959 1	TUBING HYDR
FLANGE JOINT	485434214	747	1	16	11 29 618 6	SUPERSTRUCTURE HYDR
FLANGE JOINT	485435014	651	2	14	11 29 618 6	SUPERSTRUCTURE HYDR
FLANGE JOINT	485435714	713	1	14	11 29 618 6	SUPERSTRUCTURE HYDR
FLANGE JOINT	485436414	629	2	394	11 25 903 1	TUBING HYDR
FLANGE JOINT	485436414	43	1	604	11 29 444 5	HEATING RFK
FLANGE JOINT	485436414	617	1	608	10 51 726 2	TUBING HYDR
FLANGE JOINT	491033414	601	1	652	10 51 973 8	SELF-LOADING SYSTEM HYD
FLANGE JOINT	491101214	757	1	16	11 29 618 6	SUPERSTRUCTURE HYDR
FLANGE JOINT	4981232	1	2	219	10 14 179 0	CONNECTING PIECE PRE-ASS
FLANGE JOINT	4981235	3	1	184	10 14 591 9	OIL DIPSTICK WITH PIPE
FLANGE JOINT	4981235	10	1	236	10 14 013 6	EXHAUST TC MOUNTING
FLANGE JOINT	506801208	28	1	275	11 24 114 5	ASSEMBLY INSTAL.
FLANGE JOINT	510701214	745	1	16	11 29 618 6	SUPERSTRUCTURE HYDR
FLANGE JOINT	510701314	677	2	14	11 29 618 6	SUPERSTRUCTURE HYDR
FLANGE JOINT	510701914	711	2	14	11 29 618 6	SUPERSTRUCTURE HYDR
FLANGE JOINT	510702014	742	1	16	11 29 618 6	SUPERSTRUCTURE HYDR
FLANGE JOINT	510702414	712	1	14	11 29 618 6	SUPERSTRUCTURE HYDR
FLANGE JOINT	510702414	702	1	435	11 26 260 6	WINCH 1 HYDR
FLANGE JOINT	510703914	740	1	16	11 29 618 6	SUPERSTRUCTURE HYDR
FLANGE JOINT	510704614	664	1	14	11 29 618 6	SUPERSTRUCTURE HYDR
FLANGE JOINT	510709114	600	1	652	10 51 973 8	SELF-LOADING SYSTEM HYD
FLANGE JOINT	510709214	679	1	76	11 24 773 5	HYDR POWER UNIT
FLANGE JOINT	592286514	36	1	366	10 35 250 8	CABIN
FLANGE JOINT	592286514	11	5	370	10 50 133 3	SLIDING DOOR
FLANGE JOINT	7027665	10	1	186	10 14 671 6	OIL LINE PRE-ASSEMBLY
FLANGE JOINT	7365616	653	2	394	11 25 903 1	TUBING HYDR
FLANGE JOINT	7367776	613	12	12	11 29 618 6	SUPERSTRUCTURE HYDR
FLANGE JOINT	7367776	603	4	76	11 24 773 5	HYDR POWER UNIT
FLANGE JOINT	7367776	610	1	312	10 51 969 8	NEEDLE LUFFING WINCH HYD
FLANGE JOINT	7367776	611	1	321	10 51 968 7	MAIN LUG HYDR
FLANGE JOINT	7367776	621	4	394	11 25 903 1	TUBING HYDR
FLANGE JOINT	7367776	704	1	435	11 26 260 6	WINCH 1 HYDR
FLANGE JOINT	7367776	704	1	441	11 26 261 1	WINCH 2 HYDR
FLANGE JOINT	7367776	614	1	465	10 51 959 1	TUBING HYDR
FLANGE JOINT	7367986	670	3	14	11 29 618 6	SUPERSTRUCTURE HYDR
FLANGE JOINT	7403569	202	3	344	10 55 216 1	TUBING HYDR
FLANGE JOINT	7407098	608	8	465	10 51 959 1	TUBING HYDR
FLANGE JOINT	7407098	616	2	608	10 51 726 2	TUBING HYDR
FLANGE JOINT	7407108	305	1	76	11 24 773 5	HYDR POWER UNIT
FLANGE JOINT	7407108	603	1	321	10 51 968 7	MAIN LUG HYDR
FLANGE JOINT	7407108	707	1	435	11 26 260 6	WINCH 1 HYDR
FLANGE JOINT	7407108	707	1	441	11 26 261 1	WINCH 2 HYDR
FLANGE JOINT	7410455	640	2	14	11 29 618 6	SUPERSTRUCTURE HYDR
FLANGE JOINT	7410455	643	8	394	11 25 903 1	TUBING HYDR
FLANGE JOINT	7617268	703	13	14	11 29 618 6	SUPERSTRUCTURE HYDR
FLANGE JOINT	7617268	612	1	66	10 51 969 5	A-FRAME ERECTION HYDR
FLANGE JOINT	7617268	676	3	76	11 24 773 5	HYDR POWER UNIT
FLANGE JOINT	7617268	613	1	321	10 51 968 7	MAIN LUG HYDR
FLANGE JOINT	7617268	628	6	394	11 25 903 1	TUBING HYDR

Description	Item	Pos.	Quantity	Sheet	Assembly	Description
FLANGE JOINT	7617268	602	3	689	10 51 728 1	TUBING HYDR
FLANGE JOINT	7617354	611	1	66	10 51 969 5	A-FRAME ERECTION HYDR
FLANGE JOINT	7617354	634	11	394	11 25 903 1	TUBING HYDR
FLANGE JOINT	7617354	611	7	465	10 51 959 1	TUBING HYDR
FLANGE JOINT	7617354	702	4	645	10 51 971 2	SELF-LOADING SYSTEM HYD
FLANGE JOINT	7617354	601	1	674	10 55 459 4	TUBING HYDR
FLANGE JOINT	7617354	608	1	689	10 51 728 1	TUBING HYDR
FLANGE JOINT	7617460	705	1	14	11 29 618 6	SUPERSTRUCTURE HYDR
FLANGE JOINT	7617460	613	1	66	10 51 969 5	A-FRAME ERECTION HYDR
FLANGE JOINT	7617460	635	2	394	11 25 903 1	TUBING HYDR
FLANGE JOINT	7617460	626	2	465	10 51 959 1	TUBING HYDR
FLANGE JOINT	7617460	613	2	547	10 53 146 1	TUBING HYDR
FLANGE JOINT	7617461	673	3	14	11 29 618 6	SUPERSTRUCTURE HYDR
FLANGE JOINT	7617461	600	1	66	10 51 969 5	A-FRAME ERECTION HYDR
FLANGE JOINT	7617461	633	3	394	11 25 903 1	TUBING HYDR
FLANGE JOINT	7617461	623	2	465	10 51 959 1	TUBING HYDR
FLANGE JOINT	7617461	700	2	645	10 51 971 2	SELF-LOADING SYSTEM HYD
FLANGE JOINT	7617494	678	2	14	11 29 618 6	SUPERSTRUCTURE HYDR
FLANGE JOINT	7617494	303	1	75	11 24 773 5	HYDR POWER UNIT
FLANGE JOINT	7622060	712	2	435	11 26 260 6	WINCH 1 HYDR
FLANGE JOINT	7622060	712	2	441	11 26 261 1	WINCH 2 HYDR
FLANGE JOINT	790259414	612	1	608	10 51 726 2	TUBING HYDR
FLANGE JOINT	790453814	614	1	12	11 29 618 6	SUPERSTRUCTURE HYDR
FLANGE JOINT	790453814	648	3	76	11 24 773 5	HYDR POWER UNIT
FLANGED BOLT M33X220 10.9	11266734	12	76	51	10 51 963 1	SUPERSTR. SLEWING RING IN
FLANGED BOLT M33X245 10.9	10512966	10	80	387	10 51 969 6	CONNECTION SUPERSTR UC
FLANGED BOLT MO90X4108X5	10522847	2	1	584	79 03 862 14	LOAD HOOK
FLAP CPL	10352672	57	1	366	10 35 250 8	CABIN
FLASHING LIGHT	10524928	90	1	352	11 27 973 6	CABIN EL
FLASHING LIGHT	10524928	35	2	474	10 53 120 7	A-FRAME ELECTRICS
FLAT CAGE BEARING	501532014	9	1	614	54 02 702 14	ROPE DRUM CPL
FLAT COPPER EL	10530486	6	1	31	10 53 048 9	FUSE HOLDER
FLAT GASKET	9276860	37	2	95	10 11 834 9	DOUBLE V-PUMP
FLAT GASKET	9276860	37	2	114	92 76 408	SEAL KIT DOUBLE PUMP
FLAT PLUG	602203914	55	6	351	11 27 973 6	CABIN EL
FLAT PLUG	602203914	92	6	352	11 27 973 6	CABIN EL
FLAT PLUG	602203914	71	2	715	10 52 155 9	MODULE REFUELLING SYSTE
FLAT PLUG HOUSING	602208714	92	1	354	10 55 963 5	SWITCH CABINET X1
FLAT PLUG HOUSING	602209014	91	1	352	11 27 973 6	CABIN EL
FLAT PLUG HOUSING	602305914	54	3	351	11 27 973 6	CABIN EL
FLAT PLUG HOUSING	602305914	70	1	715	10 52 155 9	MODULE REFUELLING SYSTE
FLAT SEALING RING	10588725	4	1	467	59 20 224 14	LOAD HOLDING VALVE
FLEXIBLE EDGE PROTECTOR	10352462	17	0.422	485	11 28 390 8	BOOM ACCESS
FLEXIBLE EDGE PROTECTOR	10352462	17	0.422	499	11 28 583 8	BOOM ACCESS
FLEXIBLE EDGE PROTECTOR	10352462	17	0.422	505	11 28 626 1	BOOM ACCESS
FLEXIBLE EDGE PROTECTOR	262103101	16	0.16	480	10 35 063 3	FASTENER
FLEXIBLE EDGE PROTECTOR	262103101	62	0.92	525	11 24 336 5	PIVOT PIECE NEEDLE CPL
FLEXIBLE EDGE PROTECTOR	262103101	13	0.93	552	11 24 084 8	BOOM INTERMEDIATE SECTIO
FLEXIBLE EDGE PROTECTOR	262103101	13	0.93	559	11 24 162 5	BOOM INTERMEDIATE SECTIO
FLEXIBLE EDGE PROTECTOR	262103101	13	0.93	562	11 24 163 0	BOOM INTERMEDIATE SECTIO
FLEXIBLE EDGE PROTECTOR	262105314	14	9	288	11 24 409 1	COVERS
FLEXIBLE EDGE PROTECTOR	262105314	2	1.1	290	10 57 883 5	DOOR
FLOOR	11289833	25	1	669	59 21 826 14	SUPPORT CYL
FLOOR MAT	592286914	25	1	366	10 35 250 8	CABIN
FLOOR PLATE	388291208	16	72	408	10 55 876 0	CRAWLER CARRIER RIGHT CP
FLOOR PLATE	388291208	16	72	417	10 55 876 1	CRAWLER CARRIER LEFT CP
FLOW REGULATING CHECK	11233730	4	1	68	10 22 540 8	VALVE BLOCK
FLUE GAS PIPE CPL	11248166	6	1	268	11 24 114 3	EXHAUST GAS SYSTEM
FLUE GAS PIPE CPL	11271008	8	1	604	11 29 444 5	HEATING RFK
FLUE GAS PIPE CPL	11271011	9	1	604	11 29 444 5	HEATING RFK

Description	Item	Pos.	Quantity	Sheet	Assembly	Description
FLYWHEEL ASSEMBLY	10118929	530	1	173	10 14 032 7	DIESEL ENGINE
FLYWHEEL HOUSING MOUNT	10115577	520	1	172	10 14 032 7	DIESEL ENGINE
FLYWHEEL HOUSING PRE-A	10115576	1	1	242	10 11 557 7	FLYWHEEL HOUSING MOUNT
FLYWHEEL PRE-ASS.	10118928	1	1	246	10 11 892 9	FLYWHEEL ASSEMBLY
FOLDING BRACKET	10564433	10	4	665	11 89 568 6	SELF-LOADING SYSTEM RFK
FOOT PEDAL	11219883	1	1	698	11 22 037 2	FOOT PEDAL EL INSTALLATIO
FOOT PEDAL	11223717	210	2	352	11 27 973 6	CABIN EL
FOOT PEDAL EL INSTALLATIO	11220372	723	1	4	01 38 281 14	LR 1300 SX
FOOT PEDAL EL INSTALLATIO	11223691	211	1	352	11 27 973 6	CABIN EL
FOOT ST.CONST.	990954814	31	2	450	11 23 820 3	PIVOT PIECE CPL
FOOT STRIP	10585909	20	1	619	10 55 372 1	ROOF RAILING RFK
FOOT STRIP	10585910	21	1	619	10 55 372 1	ROOF RAILING RFK
FOOT STRIP	10585911	22	1	619	10 55 372 1	ROOF RAILING RFK
FOOT STRIP	10585912	23	1	619	10 55 372 1	ROOF RAILING RFK
FOOT STRIP	10585913	24	2	619	10 55 372 1	ROOF RAILING RFK
FOOT STRIP	10585914	25	1	619	10 55 372 1	ROOF RAILING RFK
FOOT STRIP	10585915	26	1	619	10 55 372 1	ROOF RAILING RFK
FOOT STRIP	10585916	27	1	619	10 55 372 1	ROOF RAILING RFK
FOOT STRIP	10585917	28	1	619	10 55 372 1	ROOF RAILING RFK
FOOT STRIP	10585919	30	1	619	10 55 372 1	ROOF RAILING RFK
FOOT STRIP	10585920	31	1	619	10 55 372 1	ROOF RAILING RFK
FOOT STRIP	10586854	62	1	621	10 55 372 1	ROOF RAILING RFK
FORCE MEASURING AXLE	11261289	1	2	468	11 29 259 6	FORCE MEASURING AXLE EL
FORCE MEASURING AXLE EL	11292596	3	1	462	11 29 259 8	TILT-BACK SUPPORT
FORCE MEASURING STRAP	10525837	1	2	539	11 31 381 7	A-FRAME ELECTRICS
FORCE MEASURING STRAP	10530243	31	2	474	10 53 120 7	A-FRAME ELECTRICS
FORK	970591503	1	4	641	99 23 420 14	INTERMEDIATE TENSIONING
FORK	990678914	2	4	641	99 23 420 14	INTERMEDIATE TENSIONING
FORK	991012514	2	4	639	99 23 405 14	INTERMEDIATE TENSIONING
FORK	993034714	1	4	639	99 23 405 14	INTERMEDIATE TENSIONING
FORK ST.CONST.	990678714	1	1	642	99 06 789 14	FORK
FORK ST.CONST.	990678814	2	1	642	99 06 789 14	FORK
FORK ST.CONST.	991011914	40	2	637	99 10 116 14	ROPE GUIDE
FORK ST.CONST.	991012214	41	2	637	99 10 116 14	ROPE GUIDE
FORK ST.CONST.	991012214	2	1	640	99 10 125 14	FORK
FORK ST.CONST.	991012614	1	1	640	99 10 125 14	FORK
FORM HOSE	10337090	45	1	254	11 24 114 0	COOLER INSTALLATION WATE
FORM HOSE	10350439	46	1	254	11 24 114 0	COOLER INSTALLATION WATE
FORM HOSE	11238170	19	1	604	11 29 444 5	HEATING RFK
FORM HOSE	11270026	44	1	254	11 24 114 0	COOLER INSTALLATION WATE
FORM HOSE	11287796	25	1	254	11 24 114 0	COOLER INSTALLATION WATE
FORM HOSE	550930514	21	1	604	11 29 444 5	HEATING RFK
FORM HOSE	550936214	94	1	255	11 24 114 0	COOLER INSTALLATION WATE
FOUR LIPPED SEALS	10099037	1	24	18	10 52 459 5	SEALING SET
FOUR LIPPED SEALS	11301682	2	10	18	10 52 459 5	SEALING SET
FRAME	10566842	1	1	286	11 24 409 1	COVERS
FRAME	11236714	7	1	700	11 21 750 0	LIQUEFIER
FRAME	11244092	2	1	286	11 24 409 1	COVERS
FRAME	11281448	1	1	373	59 22 871 14	FRONT WINDOW CPL
FRAME	602481914	1	1	363	91 65 251 14	CABLE DUCT CABINET 1
FRAME CPL	11247688	1	1	164	11 24 113 8	MOTOR BEARING CPL
FRAME ST.CONST.	10578321	12	1	58	10 58 163 4	CABIN SUSPENSION CPL
FRONT WINDOW	592287214	10	1	373	59 22 871 14	FRONT WINDOW CPL
FRONT WINDOW CPL	592287114	28	1	366	10 35 250 8	CABIN
FRONT WINDOW CPL	592288414	34	1	366	10 35 250 8	CABIN
FUEL FINE FILTER	10146753	1	1	214	10 14 679 7	FUEL FINE-FILTER ASSEMBLY
FUEL FINE FILTER	10429946	2	2	215	10 14 675 3	FUEL FINE FILTER
FUEL FINE-FILTER ASSEMBLY	10146797	201	1	172	10 14 032 7	DIESEL ENGINE
FUEL HOSE	553128608	70	1.5	275	11 24 114 5	ASSEMBLY INSTAL.
FUEL HOSE	553191108	20	2	604	11 29 444 5	HEATING RFK

Description	Item	Pos.	Quantity	Sheet	Assembly	Description
FUEL LINE	9076621	4	1	217	10 14 588 5	LEAK OIL RETURN LINE
FUEL LINES	10143339	212	1	172	10 14 032 7	DIESEL ENGINE
FUEL PREFILTER	10303007	1	1	272	10 55 091 1	ADD-ON PRELIMINARY FUEL F
FUEL SYSTEM	11241144	50	1	73	11 24 048 0	CENTRAL POWER UNIT
FUEL TANK ASSY.	10560732	16	1	6	11 24 047 9	SUPERSTRUCTURE CPL
FUEL TANK CPL	10560733	10	1	47	10 56 073 2	FUEL TANK ASSY.
FUEL TANK ST.CONST.	10560734	10	1	48	10 56 073 3	FUEL TANK CPL
FUSE ASSAYER	10227556	2	1	355	99 20 811 14	RESERVE FUSES
FUSE CARTRIDGE	10224306	1	1	31	10 53 048 9	FUSE HOLDER
FUSE CARTRIDGE	10224306	21	2	355	99 20 811 14	RESERVE FUSES
FUSE CARTRIDGE	10224307	11	3	31	10 53 048 9	FUSE HOLDER
FUSE CARTRIDGE	10224307	22	2	355	99 20 811 14	RESERVE FUSES
FUSE CARTRIDGE	604105314	68	5	354	10 55 963 5	SWITCH CABINET X1
FUSE CARTRIDGE	604105314	5	5	355	99 20 811 14	RESERVE FUSES
FUSE CARTRIDGE	604105414	7	5	355	99 20 811 14	RESERVE FUSES
FUSE CARTRIDGE	604105514	69	41	354	10 55 963 5	SWITCH CABINET X1
FUSE CARTRIDGE	604105514	10	10	355	99 20 811 14	RESERVE FUSES
FUSE CARTRIDGE	604105614	70	6	354	10 55 963 5	SWITCH CABINET X1
FUSE CARTRIDGE	604105614	15	5	355	99 20 811 14	RESERVE FUSES
FUSE HOLDER	10530489	34	1	28	11 24 519 0	SUPERSTRUCTURE EL
GAS OPERATED SPRING	10800103	2	1	361	69 31 685 14	SAFETY LEVER CPL
GAS SPRING	592287414	13	1	373	59 22 871 14	FRONT WINDOW CPL
GAS SPRING	592323514	11	7	286	11 24 409 1	COVERS
GAS SPRING	592323514	22	3	298	10 54 591 0	MOTOR COWLING
GASKET KIT INT.FLANGE	10138034	3	1	134	10 13 803 3	SEAL KIT CPL.
GAUGE CONNECTION	510629008	205	2	392	11 25 903 1	TUBING HYDR
GAUGE CONNECTION	510664814	200	2	12	11 29 618 6	SUPERSTRUCTURE HYDR
GAUGE CONNECTION	510664814	701	2	435	11 26 260 6	WINCH 1 HYDR
GAUGE CONNECTION	510664814	701	2	441	11 26 261 1	WINCH 2 HYDR
GAUGE CONNECTION	510664814	613	2	608	10 51 726 2	TUBING HYDR
GAUGE CONNECTION	510694514	202	19	12	11 29 618 6	SUPERSTRUCTURE HYDR
GAUGE CONNECTION	510694514	201	2	66	10 51 969 5	A-FRAME ERECTION HYDR
GAUGE CONNECTION	510694514	671	14	76	11 24 773 5	HYDR POWER UNIT
GAUGE CONNECTION	510694514	201	2	312	10 51 969 8	NEEDLE LUFFING WINCH HYD
GAUGE CONNECTION	510694514	201	2	321	10 51 968 7	MAIN LUG HYDR
GAUGE CONNECTION	510694514	203	2	344	10 55 216 1	TUBING HYDR
GAUGE CONNECTION	510694514	204	8	392	11 25 903 1	TUBING HYDR
GAUGE CONNECTION	510694514	700	2	435	11 26 260 6	WINCH 1 HYDR
GAUGE CONNECTION	510694514	700	2	441	11 26 261 1	WINCH 2 HYDR
GAUGE CONNECTION	510694514	201	1	465	10 51 959 1	TUBING HYDR
GAUGE CONNECTION	510694514	205	2	547	10 53 146 1	TUBING HYDR
GAUGE CONNECTION	510694514	202	1	652	10 51 973 8	SELF-LOADING SYSTEM HYD
GAUGE CONNECTION	510695314	204	1	547	10 53 146 1	TUBING HYDR
GAUGE CONNECTION	510695314	201	2	652	10 51 973 8	SELF-LOADING SYSTEM HYD
GAUGE CONNECTION	510695314	706	1	662	11 89 408 3	TUBING HYDR
GAUGE CONNECTION	7409720	201	1	12	11 29 618 6	SUPERSTRUCTURE HYDR
GAUGE CONNECTION	7409720	304	2	75	11 24 773 5	HYDR POWER UNIT
GAUGE CONNECTION	7409720	200	2	344	10 55 216 1	TUBING HYDR
GEAR CAM LIMITSWITCH	606279214	1	1	436	11 21 634 2	WINCH 1 EL
GEAR OIL	11282715	990	8.3	78	11 24 682 0	DISTRIBUTOR GEARBOX
GEAR PUMP	512214414	10	1	75	11 24 773 5	HYDR POWER UNIT
GEAR PUMP	512249914	7	1	75	11 24 773 5	HYDR POWER UNIT
GEAR WHEEL	10121982	5	1	204	10 13 382 3	SUCTION PUMP PRE-ASS.
GEAR WHEEL	10121983	4	1	204	10 13 382 3	SUCTION PUMP PRE-ASS.
GEAR WHEEL	10133684	6	1	204	10 13 382 3	SUCTION PUMP PRE-ASS.
GEARBOX	10583865	3	1	324	10 55 156 3	WINCH
GEARBOX	11893213	1	1	425	10 53 039 8	WINCH
GENERATOR, PRE-ASSEMBLE	10145845	440	1	172	10 14 032 7	DIESEL ENGINE
GLUE	811208201	118	1	129	10 14 131 6	TERMINAL BOARD PRE-ASS.
GLUE	8655023	118	1	97	10 11 835 0	CONNECTION HOUSING

Description	Item	Pos.	Quantity	Sheet	Assembly	Description
GLUE	8655023	104	1	174	10 15 438 6	CRANKCASE CPL.
GLUE	8655023	104	1	193	10 13 728 5	CYLINDER HEAD
GLUE	8655032	119	1	99	10 11 835 7	REPAIR KIT CONNECTION HO
GRATING	10222994	46	1	450	11 23 820 3	PIVOT PIECE CPL
GRATING	10227124	11	1	422	99 26 718 14	PEDESTAL
GRATING	10530418	14	1	485	11 28 390 8	BOOM ACCESS
GRATING	10530418	14	1	499	11 28 583 8	BOOM ACCESS
GRATING	10545915	6	1	282	11 24 409 0	PANELLING SUPERSTR. INSTA
GRATING	10581980	84	1	451	11 23 820 3	PIVOT PIECE CPL
GRATING	10581981	85	1	451	11 23 820 3	PIVOT PIECE CPL
GRATING	10581982	95	1	451	11 23 820 3	PIVOT PIECE CPL
GRATING	10584105	50	1	284	11 24 409 0	PANELLING SUPERSTR. INSTA
GRATING	10598959	10	1	459	10 58 193 7	GRATING CPL
GRATING	10599053	24	1	459	10 58 193 7	GRATING CPL
GRATING	11239010	92	1	451	11 23 820 3	PIVOT PIECE CPL
GRATING	11245758	3	1	624	11 24 575 5	PEDESTAL
GRATING	11245766	5	2	623	11 24 147 8	UC PLATFORM
GRATING	11245767	6	2	623	11 24 147 8	UC PLATFORM
GRATING	11263492	6	1	512	11 28 629 9	MOUNTING PARTS
GRATING	11275747	41	1	450	11 23 820 3	PIVOT PIECE CPL
GRATING	11289788	12	1	560	11 28 979 2	BOOM ACCESS
GRATING	11289789	13	2	560	11 28 979 2	BOOM ACCESS
GRATING	11311245	15	2	485	11 28 390 8	BOOM ACCESS
GRATING	11311245	15	1	499	11 28 583 8	BOOM ACCESS
GRATING	11311245	14	1	505	11 28 626 1	BOOM ACCESS
GRATING	11311371	20	1	499	11 28 583 8	BOOM ACCESS
GRATING	11311371	15	1	505	11 28 626 1	BOOM ACCESS
GRATING	11311390	20	1	505	11 28 626 1	BOOM ACCESS
GRATING	11894306	13	2	553	11 28 978 7	BOOM ACCESS
GRATING	11894307	12	1	553	11 28 978 7	BOOM ACCESS
GRATING	790512314	5	1	512	11 28 629 9	MOUNTING PARTS
GRATING	790512414	4	1	512	11 28 629 9	MOUNTING PARTS
GRATING	790512414	51	2	525	11 24 336 5	PIVOT PIECE NEEDLE CPL
GRATING CARRIER	11289790	10	1	553	11 28 978 7	BOOM ACCESS
GRATING CARRIER	11289790	10	1	560	11 28 979 2	BOOM ACCESS
GRATING CPL	10581937	48	1	450	11 23 820 3	PIVOT PIECE CPL
GREASE	10282622	100	1	202	10 13 394 5	LUBRICATING OIL PUMP
GREASE	10282622	100	1	203	10 13 394 7	SUCTION PUMP WITH FASTEN
GREASE	10282622	100	1	242	10 11 557 7	FLYWHEEL HOUSING MOUNT
GREASE	10282622	100	1	245	10 12 797 9	LOCKING PIECES
GREASE	10285708	100	1	175	10 14 768 6	POWER UNIT SUPPORT ATT
GREASE	10285708	100	1	187	10 14 275 8	CYLINDER
GREASE	10285708	100	1	221	10 14 736 9	INTAKE STACK ASSEMBLY
GREASE	10285708	100	1	222	10 14 736 4	AIR INTAKE ASSEMBLY
GREASE	10285708	100	1	229	10 14 273 4	WATER PUMP WITH FASTENIN
GREASE	10285708	100	1	230	10 14 821 5	THERMOSTAT HOUSING ASS
GREASE	10285708	100	1	232	10 14 274 2	COOLANT PIPE BEND ADD-ON
GREASE	10285708	100	1	252	10 14 637 4	LOCKING PIECES
GREASE	8655008	126	1	112	92 68 016	REPAIR KIT LOCK RING
GREASE	8655008	126	1	124	10 13 802 7	REPAIR KIT SHAFT
GREASE	8655008	126	1	132	10 13 803 2	REPAIR KIT LOCK RING
GREASE NIPPLE	10571619	7	1	595	11 27 148 8	HANGER
GREASE NIPPLE	11312502	4	1	587	10 50 435 2	ROPE PULLEY
GRIP	10020487	4	1	290	10 57 883 5	DOOR
GRIP	10020487	4	1	292	10 57 897 6	DOOR
GRIP	10020487	4	1	296	10 56 580 8	DOOR
GRIP	10579145	2	1	295	10 56 623 7	DOOR
GRIP	10579454	2	1	294	10 57 940 0	DOOR
GRIP	7025006	20	1	381	70 24 996	SEAT FRAME
GRIP	7025006	20	2	693	70 28 516	SEAT FRAME

Description	Item	Pos.	Quantity	Sheet	Assembly	Description
GRIP SHELL	10226472	18	1	370	10 50 133 3	SLIDING DOOR
GRIP SHELL	592289614	2	1	374	10 35 267 2	FLAP CPL
GROMMET	11225402	63	2	284	11 24 409 0	PANELLING SUPERSTR. INSTA
GROMMET NUT M6	7361600	21	1	102	92 73 644	SEAL KIT REGULATING VALVE
GROMMET NUT M8	7361601	11	1	89	11 06 730 4	SHUTDOWN VALVE
GROMMET NUT M8	7361601	37	2	102	92 73 644	SEAL KIT REGULATING VALVE
GROOVING BLOCK	9076196	18	1	127	10 12 224 5	REPAIR KIT LEVER
GRUB SCREW	11267417	7	1	87	10 59 347 4	PRESSURE LIMITING VALVE
GRUB SCREW	7373597	17	2	397	51 24 059 14	VARIABLE DISPLACEMENT MO
GRUB SCREW DIN 913 M6X6	4980082	21	1	129	10 14 131 6	TERMINAL BOARD PRE-ASS.
GRUB SCREW ISO 4026 M10X4	404403114	21	1	350	11 29 327 3	CABIN CPL
GUARD	10566030	4	1	26	10 22 592 5	COOLER MOTOR
GUARD	11267554	9	1	257	10 57 423 7	COOLER MOTOR
GUARD RING	10120443	3	1	188	10 12 134 5	RK CRANKSHAFT SEAL
GUIDE	10512821	88	2	367	10 35 250 8	CABIN
GUIDE	11292956	17	1	400	10 44 510 2	QUICK RELEASE FITTING
GUIDE BUSHING 145/100X130	11310567	4	1	466	10 09 917 3	DOUBLE-ACTING CYL
GUIDE BUSHING M30 X 1.5 X	10352312	35	1	669	59 21 826 14	SUPPORT CYL
GUIDE BUSHING M40 X 1.5 X	10352313	40	1	669	59 21 826 14	SUPPORT CYL
GUIDE CPL	959576314	100	1	368	10 22 645 4	DOOR ACCESSORIES
GUIDE PULLEY COMPL.	9077708	3	2	226	10 14 286 0	AIR COND. COMPRESSOR A
GUIDE RING	10351499	120	2	669	59 21 826 14	SUPPORT CYL
GUIDE RING	10352344	65	1	669	59 21 826 14	SUPPORT CYL
GUIDE RING	10352349	70	2	669	59 21 826 14	SUPPORT CYL
GUIDE RING	10352352	75	2	669	59 21 826 14	SUPPORT CYL
GUIDE RING	10352354	95	1	669	59 21 826 14	SUPPORT CYL
GUIDE RING	11267401	11	2	86	11 21 993 0	PUMP HOUSING
GUIDE RING	726206214	100	3	669	59 21 826 14	SUPPORT CYL
GUIDE RING	790400414	10	3	548	59 21 280 14	SINGLE-ACTING CYL
GUIDE RING	9266680	18	2	99	10 11 835 7	REPAIR KIT CONNECTION HO
GUIDE RING	9881114	33	2	99	10 11 835 7	REPAIR KIT CONNECTION HO
GUIDE WHEEL	11299752	1	1	410	10 55 716 2	GUIDE WHEEL CPL
GUIDE WHEEL CPL	10557162	1	1	409	10 55 716 1	GUIDE WHEEL UNIT CPL
GUIDE WHEEL UNIT CPL	10557161	2	1	408	10 55 876 0	CRAWLER CARRIER RIGHT CP
GUIDE WHEEL UNIT CPL	10557161	2	1	417	10 55 876 1	CRAWLER CARRIER LEFT CP
GUIDING BOLT	10572236	1	1	402	10 55 154 8	QUICK RELEASE FITTING
GUIDING BOLT	10572236	1	2	454	10 55 157 6	QUICK RELEASE FITTING
GUIDING BRACKET ABOVE	10226463	305	1	368	10 22 645 4	DOOR ACCESSORIES
GUIDING BRACKET BELOW	10226461	228	1	368	10 22 645 4	DOOR ACCESSORIES
GUIDING BRACKET CENTRE	10226458	15	1	369	95 95 763 14	GUIDE CPL
GUIDING PIPE	9266847	1	1	184	10 14 591 9	OIL DIPSTICK WITH PIPE
GUIDING RAIL	10226457	9	1	369	95 95 763 14	GUIDE CPL
GUIDING RAIL	10226459	222	1	368	10 22 645 4	DOOR ACCESSORIES
GUIDING RAIL	10226462	300	1	368	10 22 645 4	DOOR ACCESSORIES
GUIDING RAIL ST.CONST.	10537682	1	1	512	11 28 629 9	MOUNTING PARTS
GUIDING RAIL ST.CONST.	919956014	2	2	512	11 28 629 9	MOUNTING PARTS
GUIDING RAIL ST.CONST.	919956114	3	2	512	11 28 629 9	MOUNTING PARTS
GUY ROPE	10350539	10	2	643	97 05 997 03	INTERMEDIATE TENSIONING
GUY ROPE	774760214	1	6	643	97 05 997 03	INTERMEDIATE TENSIONING
GUY ROPE	774760314	4	6	643	97 05 997 03	INTERMEDIATE TENSIONING
GUY ROPE	774760414	3	6	643	97 05 997 03	INTERMEDIATE TENSIONING
GUY ROPE	774760514	2	8	643	97 05 997 03	INTERMEDIATE TENSIONING
GUY ROPE	790538014	9	2	643	97 05 997 03	INTERMEDIATE TENSIONING
HAND LEVER PRESS 400B	885602114	4	1	444	10 56 183 8	TOOL
HANDRAIL	10518461	41	1	408	10 55 876 0	CRAWLER CARRIER RIGHT CP
HANDRAIL	10518461	42	1	417	10 55 876 1	CRAWLER CARRIER LEFT CP
HANDRAIL	10523559	11	1	408	10 55 876 0	CRAWLER CARRIER RIGHT CP
HANDRAIL	10523559	11	1	417	10 55 876 1	CRAWLER CARRIER LEFT CP
HANDWHEEL	5609144	53	1	382	10 28 999 3	VIBRATING SYSTEM
HANGER	11271488	22	1	593	79 04 871 14	BOTTOM HOOK BLOCK

Description	Item	Pos.	Quantity	Sheet	Assembly	Description
HANGER	11274638	21	1	586	79 04 112 14	BOTTOM HOOK BLOCK
HEAD REST	7370221	1	1	692	10 04 363 3	DRIVERS SEAT AIR-SUSPEN
HEAD REST	737022103	12	1	350	11 29 327 3	CABIN CPL
HEAD WHIP HOIST EL	10531410	3	1	564	11 24 263 6	NEEDLE HEAD CPL
HEAT EXCHANGER	10446225	14	1	75	11 24 773 5	HYDR POWER UNIT
HEAT EXCHANGER	10512662	40	1	378	59 22 930 14	AIR CONDITIONER
HEAT EXCHANGER	11236707	1	1	700	11 21 750 0	LIQUEFIER
HEAT PROTECTION W.FASTEN	10142591	415	1	172	10 14 032 7	DIESEL ENGINE
HEATING FLANGE ADD-ON	9078314	260	1	172	10 14 032 7	DIESEL ENGINE
HEATING FLANGE PRE.ASS.	10299988	1	1	223	90 78 314	HEATING FLANGE ADD-ON
HEATING RFK	11294445	10	1	601	11 29 551 4	LOW TEMPERATURE PACKAG
HEATSHRINK SLEEVING	603018114	18	0.2	515	10 59 863 3	PENDULUM CPL
HEX NUT AEHNL.ISO 7042 M8	7381182	11	2	237	10 14 511 2	EXHAUST NOZZLE ATTACHM
HEX NUT DIN 439 M16X1.5	10297942	6	1	81	11 21 990 5	ADJUSTMENT
HEX NUT DIN 985 M8	11236108	20	12	586	79 04 112 14	BOTTOM HOOK BLOCK
HEX NUT DIN 985 M8	11236108	20	12	593	79 04 871 14	BOTTOM HOOK BLOCK
HEX NUT DIN EN 1663 M8 A4	11314341	12	3	477	11 23 749 8	SUPPORT CPL
HEX NUT DIN EN 1663 M8 A4	11314341	13	3	494	11 23 290 7	SUPPORT CPL
HEX NUT DIN EN 1663 M8 A4	11314341	17	4	495	11 23 292 2	SUPPORT CPL
HEX NUT DIN EN 1663 M8 A4	11314341	15	4	579	11 25 204 2	SUPPORT CPL
HEX NUT EN 1661 M10 8	4980805	15	1	204	10 13 382 3	SUCTION PUMP PRE-ASS.
HEX NUT EN 1661 M10 8	4980805	4	3	222	10 14 736 4	AIR INTAKE ASSEMBLY
HEX NUT EN 1661 M10 8	4980805	7	1	239	10 14 584 5	GENERATOR, PRE-ASSEMBLE
HEX NUT EN 1661 M10 8	4980805	3	3	240	10 12 037 2	STARTER INSTALLATION
HEX NUT EN 1661 M8 A2	485569314	14	16	422	99 26 718 14	PEDESTAL
HEX NUT EN 1661 M8 A2	485569314	14	16	624	11 24 575 5	PEDESTAL
HEX NUT ISO 10511 M10 10	411901114	8	1	31	10 53 048 9	FUSE HOLDER
HEX NUT ISO 10511 M10 10	411901114	80	4	165	10 51 948 1	SUCTION PIPE OIL
HEX NUT ISO 10511 M10 A4	10540494	20	2	41	10 51 961 6	OIL COOLER INSTALLATION
HEX NUT ISO 10511 M10 A4	10540494	80	4	44	10 56 070 1	TANK HYDR CPL
HEX NUT ISO 10511 M10 A4	10540494	5	1	50	10 55 268 1	DRIVER INSTALLATION
HEX NUT ISO 10511 M10 A4	10540494	15	4	60	10 56 067 3	BATTERY INSTALLATION CPL
HEX NUT ISO 10511 M10 A4	10540494	82	18	255	11 24 114 0	COOLER INSTALLATION WATE
HEX NUT ISO 10511 M10 A4	10540494	81	10	261	11 24 114 1	COOLER INSTALLATION CHA
HEX NUT ISO 10511 M10 A4	10540494	80	2	268	11 24 114 3	EXHAUST GAS SYSTEM
HEX NUT ISO 10511 M10 A4	10540494	106	2	276	11 24 114 5	ASSEMBLY INSTAL.
HEX NUT ISO 10511 M10 A4	10540494	83	6	280	11 24 114 6	COVER
HEX NUT ISO 10511 M10 A4	10540494	30	54	282	11 24 409 0	PANELLING SUPERSTR. INSTA
HEX NUT ISO 10511 M10 A4	10540494	8	4	298	10 54 591 0	MOTOR COWLING
HEX NUT ISO 10511 M10 A4	10540494	28	12	300	11 24 922 2	COVER UNDERSIDE
HEX NUT ISO 10511 M10 A4	10540494	76	83	304	11 24 483 7	MOUNTING PARTS SUPERST
HEX NUT ISO 10511 M10 A4	10540494	53	22	450	11 23 820 3	PIVOT PIECE CPL
HEX NUT ISO 10511 M10 A4	10540494	15	2	479	99 29 588 14	SUPPORT
HEX NUT ISO 10511 M10 A4	10540494	15	2	480	10 35 063 3	FASTENER
HEX NUT ISO 10511 M10 A4	10540494	18	2	487	11 28 397 7	SUMP PAN CPL
HEX NUT ISO 10511 M10 A4	10540494	18	2	488	11 28 397 8	SUMP PAN CPL
HEX NUT ISO 10511 M10 A4	10540494	18	4	489	11 28 399 5	SUMP PAN CPL
HEX NUT ISO 10511 M10 A4	10540494	18	4	490	11 28 399 7	SUMP PAN CPL
HEX NUT ISO 10511 M10 A4	10540494	17	2	491	11 28 794 6	TRANSPORT LASHING
HEX NUT ISO 10511 M10 A4	10540494	21	1	515	10 59 863 3	PENDULUM CPL
HEX NUT ISO 10511 M10 A4	10540494	11	4	516	11 28 357 6	MOUNTING PARTS
HEX NUT ISO 10511 M10 A4	10540494	12	1	522	99 30 800 14	HOIST LIMIT SWITCH INSTAL.
HEX NUT ISO 10511 M10 A4	10540494	18	4	554	11 28 979 0	GRATING CARRIER
HEX NUT ISO 10511 M10 A4	10540494	13	2	556	11 28 544 3	SUPPORT SYSTEM CPL
HEX NUT ISO 10511 M10 A4	10540494	17	2	557	11 28 982 7	TRANSPORT LASHING
HEX NUT ISO 10511 M10 A4	10540494	59	4	570	11 28 774 6	MOUNTING PARTS
HEX NUT ISO 10511 M10 A4	10540494	47	1	577	99 48 521 14	TIP BOOM CPL
HEX NUT ISO 10511 M10 A4	10540494	39	54	621	10 55 372 1	ROOF RAILING RFK
HEX NUT ISO 10511 M10 A4	10540494	15	1	633	10 51 176 9	NEEDLE BOOM CPL
HEX NUT ISO 10511 M10 A4	10540494	14	1	648	99 35 606 14	MOUNTING LINK CPL

Description	Item	Pos.	Quantity	Sheet	Assembly	Description
HEX NUT ISO 10511 M10 A4	10540494	9	2	650	11 23 619 7	SELF-LOADING SYSTEM RFK
HEX NUT ISO 10511 M10 A4	10540494	21	1	680	11 22 344 2	CAMERA INSTALLATION
HEX NUT ISO 10511 M10 A4	10540494	16	5	705	11 26 771 6	MOUNTING PARTS
HEX NUT ISO 10511 M12 A4	10540495	36	4	58	10 58 163 4	CABIN SUSPENSION CPL
HEX NUT ISO 10511 M12 A4	10540495	20	2	60	10 56 067 3	BATTERY INSTALLATION CPL
HEX NUT ISO 10511 M12 A4	10540495	81	6	165	10 51 948 1	SUCTION PIPE OIL
HEX NUT ISO 10511 M12 A4	10540495	82	4	268	11 24 114 3	EXHAUST GAS SYSTEM
HEX NUT ISO 10511 M12 A4	10540495	105	1	276	11 24 114 5	ASSEMBLY INSTAL.
HEX NUT ISO 10511 M12 A4	10540495	70	8	304	11 24 483 7	MOUNTING PARTS SUPERST
HEX NUT ISO 10511 M12 A4	10540495	23	2	320	10 51 968 6	LUG SUPERSTRUCTURE CPL
HEX NUT ISO 10511 M12 A4	10540495	19	144	408	10 55 876 0	CRAWLER CARRIER RIGHT CP
HEX NUT ISO 10511 M12 A4	10540495	19	144	417	10 55 876 1	CRAWLER CARRIER LEFT CP
HEX NUT ISO 10511 M12 A4	10540495	24	2	450	11 23 820 3	PIVOT PIECE CPL
HEX NUT ISO 10511 M12 A4	10540495	33	4	525	11 24 336 5	PIVOT PIECE NEEDLE CPL
HEX NUT ISO 10511 M12 A4	10540495	33	4	526	10 53 140 9	PIVOT PIECE EL
HEX NUT ISO 10511 M12 A4	10540495	46	8	541	11 29 938 4	MOUNTING PARTS
HEX NUT ISO 10511 M12 A4	10540495	56	10	621	10 55 372 1	ROOF RAILING RFK
HEX NUT ISO 10511 M12 A4	10540495	16	4	633	10 51 176 9	NEEDLE BOOM CPL
HEX NUT ISO 10511 M12 A4	10540495	26	2	686	10 58 064 7	VIDEO MONITORING SYSTEM
HEX NUT ISO 10511 M16 10	10544155	36	8	450	11 23 820 3	PIVOT PIECE CPL
HEX NUT ISO 10511 M16 10	10544155	29	4	485	11 28 390 8	BOOM ACCESS
HEX NUT ISO 10511 M16 10	10544155	29	4	499	11 28 583 8	BOOM ACCESS
HEX NUT ISO 10511 M16 10	10544155	29	4	505	11 28 626 1	BOOM ACCESS
HEX NUT ISO 10511 M16 10	10544155	58	2	533	11 29 426 7	MOUNTING PARTS
HEX NUT ISO 10511 M20 10	10544157	18	4	606	10 51 743 9	ROPE LUG CPL RFK
HEX NUT ISO 10511 M24 10	10544159	30	8	644	10 51 971 3	SELF-LOADING SYSTEM RFK
HEX NUT ISO 10511 M5 A4	10540484	15	2	53	11 26 557 2	MOUNTING PARTS
HEX NUT ISO 10511 M5 A4	10540484	21	2	60	10 56 067 3	BATTERY INSTALLATION CPL
HEX NUT ISO 10511 M5 A4	10540484	12	4	61	11 31 093 2	LIMIT SWITCH INSTALLATION
HEX NUT ISO 10511 M5 A4	10540484	47	4	350	11 29 327 3	CABIN CPL
HEX NUT ISO 10511 M5 A4	10540484	67	8	450	11 23 820 3	PIVOT PIECE CPL
HEX NUT ISO 10511 M5 A4	10540484	43	4	512	11 28 629 9	MOUNTING PARTS
HEX NUT ISO 10511 M5 A4	10540484	19	8	513	11 28 610 5	RETAINING DEVICE CPL
HEX NUT ISO 10511 M5 A4	10540484	52	4	633	10 51 176 9	NEEDLE BOOM CPL
HEX NUT ISO 10511 M6 A4	10540492	80	9	255	11 24 114 0	COOLER INSTALLATION WATE
HEX NUT ISO 10511 M6 A4	10540492	84	3	268	11 24 114 3	EXHAUST GAS SYSTEM
HEX NUT ISO 10511 M6 A4	10540492	101	14	276	11 24 114 5	ASSEMBLY INSTAL.
HEX NUT ISO 10511 M6 A4	10540492	46	10	284	11 24 409 0	PANELLING SUPERSTR. INSTA
HEX NUT ISO 10511 M6 A4	10540492	84	3	304	11 24 483 7	MOUNTING PARTS SUPERST
HEX NUT ISO 10511 M6 A4	10540492	39	6	408	10 55 876 0	CRAWLER CARRIER RIGHT CP
HEX NUT ISO 10511 M6 A4	10540492	39	6	417	10 55 876 1	CRAWLER CARRIER LEFT CP
HEX NUT ISO 10511 M6 A4	10540492	83	32	451	11 23 820 3	PIVOT PIECE CPL
HEX NUT ISO 10511 M6 A4	10540492	14	18	459	10 58 193 7	GRATING CPL
HEX NUT ISO 10511 M6 A4	10540492	31	8	473	11 24 444 4	A-FRAME 1 CPL
HEX NUT ISO 10511 M6 A4	10540492	19	1	487	11 28 397 7	SUMP PAN CPL
HEX NUT ISO 10511 M6 A4	10540492	19	1	488	11 28 397 8	SUMP PAN CPL
HEX NUT ISO 10511 M6 A4	10540492	19	1	489	11 28 399 5	SUMP PAN CPL
HEX NUT ISO 10511 M6 A4	10540492	19	1	490	11 28 399 7	SUMP PAN CPL
HEX NUT ISO 10511 M6 A4	10540492	70	8	525	11 24 336 5	PIVOT PIECE NEEDLE CPL
HEX NUT ISO 10511 M6 A4	10540492	23	4	526	10 53 140 9	PIVOT PIECE EL
HEX NUT ISO 10511 M6 A4	10540492	11	4	550	99 31 679 14	SUPPORT SYSTEM CPL
HEX NUT ISO 10511 M6 A4	10540492	57	4	570	11 28 774 6	MOUNTING PARTS
HEX NUT ISO 10511 M6 A4	10540492	35	24	621	10 55 372 1	ROOF RAILING RFK
HEX NUT ISO 10511 M6 A4	10540492	19	3	680	11 22 344 2	CAMERA INSTALLATION
HEX NUT ISO 10511 M6 A4	10540492	23	6	686	10 58 064 7	VIDEO MONITORING SYSTEM
HEX NUT ISO 10511 M8 A4	10540493	16	2	53	11 26 557 2	MOUNTING PARTS
HEX NUT ISO 10511 M8 A4	10540493	17	2	58	10 58 163 4	CABIN SUSPENSION CPL
HEX NUT ISO 10511 M8 A4	10540493	84	8	164	11 24 113 8	MOTOR BEARING CPL
HEX NUT ISO 10511 M8 A4	10540493	81	12	255	11 24 114 0	COOLER INSTALLATION WATE
HEX NUT ISO 10511 M8 A4	10540493	80	14	261	11 24 114 1	COOLER INSTALLATION CHA

Description	Item	Pos.	Quantity	Sheet	Assembly	Description
HEX NUT ISO 10511 M8 A4	10540493	80	2	262	11 28 574 7	WP
HEX NUT ISO 10511 M8 A4	10540493	80	4	264	11 24 114 2	SUCTION UNIT AIR
HEX NUT ISO 10511 M8 A4	10540493	80	2	270	11 24 114 4	FUEL SYSTEM
HEX NUT ISO 10511 M8 A4	10540493	102	6	276	11 24 114 5	ASSEMBLY INSTAL.
HEX NUT ISO 10511 M8 A4	10540493	41	23	284	11 24 409 0	PANELLING SUPERSTR. INSTA
HEX NUT ISO 10511 M8 A4	10540493	85	37	304	11 24 483 7	MOUNTING PARTS SUPERST
HEX NUT ISO 10511 M8 A4	10540493	26	4	320	10 51 968 6	LUG SUPERSTRUCTURE CPL
HEX NUT ISO 10511 M8 A4	10540493	13	2	335	99 29 386 14	BRACKET CPL
HEX NUT ISO 10511 M8 A4	10540493	13	2	336	99 29 434 14	BRACKET CPL
HEX NUT ISO 10511 M8 A4	10540493	16	8	422	99 26 718 14	PEDESTAL
HEX NUT ISO 10511 M8 A4	10540493	25	64	450	11 23 820 3	PIVOT PIECE CPL
HEX NUT ISO 10511 M8 A4	10540493	19	6	459	10 58 193 7	GRATING CPL
HEX NUT ISO 10511 M8 A4	10540493	15	8	461	99 34 198 14	LIEBHERR SIGN
HEX NUT ISO 10511 M8 A4	10540493	30	6	485	11 28 390 8	BOOM ACCESS
HEX NUT ISO 10511 M8 A4	10540493	14	2	486	11 28 391 3	FIXING CLAMP
HEX NUT ISO 10511 M8 A4	10540493	16	2	495	11 23 292 2	SUPPORT CPL
HEX NUT ISO 10511 M8 A4	10540493	30	6	499	11 28 583 8	BOOM ACCESS
HEX NUT ISO 10511 M8 A4	10540493	30	6	505	11 28 626 1	BOOM ACCESS
HEX NUT ISO 10511 M8 A4	10540493	44	4	512	11 28 629 9	MOUNTING PARTS
HEX NUT ISO 10511 M8 A4	10540493	24	2	522	99 30 800 14	HOIST LIMIT SWITCH INSTAL.
HEX NUT ISO 10511 M8 A4	10540493	21	11	525	11 24 336 5	PIVOT PIECE NEEDLE CPL
HEX NUT ISO 10511 M8 A4	10540493	13	3	526	10 53 140 9	PIVOT PIECE EL
HEX NUT ISO 10511 M8 A4	10540493	40	2	541	11 29 938 4	MOUNTING PARTS
HEX NUT ISO 10511 M8 A4	10540493	19	4	554	11 28 979 0	GRATING CARRIER
HEX NUT ISO 10511 M8 A4	10540493	14	2	555	11 28 667 9	FIXING CLAMP
HEX NUT ISO 10511 M8 A4	10540493	58	5	570	11 28 774 6	MOUNTING PARTS
HEX NUT ISO 10511 M8 A4	10540493	39	12	577	99 48 521 14	TIP BOOM CPL
HEX NUT ISO 10511 M8 A4	10540493	81	7	604	11 29 444 5	HEATING RFK
HEX NUT ISO 10511 M8 A4	10540493	42	40	621	10 55 372 1	ROOF RAILING RFK
HEX NUT ISO 10511 M8 A4	10540493	12	12	623	11 24 147 8	UC PLATFORM
HEX NUT ISO 10511 M8 A4	10540493	12	12	624	11 24 575 5	PEDESTAL
HEX NUT ISO 10511 M8 A4	10540493	17	2	633	10 51 176 9	NEEDLE BOOM CPL
HEX NUT ISO 10511 M8 A4	10540493	35	2	637	99 10 116 14	ROPE GUIDE
HEX NUT ISO 10511 M8 A4	10540493	6	4	650	11 23 619 7	SELF-LOADING SYSTEM RFK
HEX NUT ISO 10511 M8 A4	10540493	24	2	686	10 58 064 7	VIDEO MONITORING SYSTEM
HEX NUT ISO 4032 M10 10	4000383	19	4	422	99 26 718 14	PEDESTAL
HEX NUT ISO 4032 M10 10	4000383	10	4	550	99 31 679 14	SUPPORT SYSTEM CPL
HEX NUT ISO 4032 M10 10	4000383	5	2	635	95 34 317 03	CABLE HOLDER RFK
HEX NUT ISO 4032 M10 A4-70	411514614	80	6	48	10 56 073 3	FUEL TANK CPL
HEX NUT ISO 4032 M10 A4-70	411514614	82	8	164	11 24 113 8	MOTOR BEARING CPL
HEX NUT ISO 4032 M10 A4-70	411514614	81	8	268	11 24 114 3	EXHAUST GAS SYSTEM
HEX NUT ISO 4032 M10 A4-70	411514614	104	6	276	11 24 114 5	ASSEMBLY INSTAL.
HEX NUT ISO 4032 M10 A4-70	411514614	20	4	298	10 54 591 0	MOTOR COWLING
HEX NUT ISO 4032 M10 A4-70	411514614	32	1	350	11 29 327 3	CABIN CPL
HEX NUT ISO 4032 M10 A4-70	411514614	12	2	556	11 28 544 3	SUPPORT SYSTEM CPL
HEX NUT ISO 4032 M10 A4-70	411514614	19	1	574	10 55 753 7	HOIST LIMITSWITCH LEFT IN
HEX NUT ISO 4032 M10 A4-70	411514614	19	1	575	10 55 757 6	HOIST LIMITSWITCH RIGHT I
HEX NUT ISO 4032 M10 A4-70	411514614	5	2	706	10 52 293 0	SG TACHOGENERATOR RFK
HEX NUT ISO 4032 M12 A4-70	411516914	85	8	164	11 24 113 8	MOTOR BEARING CPL
HEX NUT ISO 4032 M12 A4-70	411516914	43	8	408	10 55 876 0	CRAWLER CARRIER RIGHT CP
HEX NUT ISO 4032 M12 A4-70	411516914	44	8	417	10 55 876 1	CRAWLER CARRIER LEFT CP
HEX NUT ISO 4032 M12 A4-70	411516914	25	8	419	11 23 548 1	CENTRE PART CPL
HEX NUT ISO 4032 M12 A4-70	411516914	15	2	537	99 35 031 14	ROPE GUARD CPL
HEX NUT ISO 4032 M12 A4-70	411516914	15	2	574	10 55 753 7	HOIST LIMITSWITCH LEFT IN
HEX NUT ISO 4032 M12 A4-70	411516914	15	2	575	10 55 757 6	HOIST LIMITSWITCH RIGHT I
HEX NUT ISO 4032 M12 A4-70	411516914	43	2	577	99 48 521 14	TIP BOOM CPL
HEX NUT ISO 4032 M16 10	10544154	80	10	164	11 24 113 8	MOTOR BEARING CPL
HEX NUT ISO 4032 M24 10	10544158	81	2	164	11 24 113 8	MOTOR BEARING CPL
HEX NUT ISO 4032 M3 A4-70	485546514	50	12	350	11 29 327 3	CABIN CPL
HEX NUT ISO 4032 M3 A4-70	485546514	7	4	386	11 30 962 5	HOLDER CPL

Description	Item	Pos.	Quantity	Sheet	Assembly	Description
HEX NUT ISO 4032 M4 A4-70	411551214	2	9	384	97 07 857 03	SPIRIT LEVEL ASSY.
HEX NUT ISO 4032 M4 A4-70	411551214	43	2	715	10 52 155 9	MODULE REFUELLING SYSTE
HEX NUT ISO 4032 M5 A4-70	411551114	100	2	276	11 24 114 5	ASSEMBLY INSTAL.
HEX NUT ISO 4032 M5 A4-70	411551114	31	9	665	11 89 568 6	SELF-LOADING SYSTEM RFK
HEX NUT ISO 4032 M6 A4-70	411517114	56	1	350	11 29 327 3	CABIN CPL
HEX NUT ISO 4032 M6 A4-70	411517114	6	4	385	10 53 756 0	LAMP HOLDER CPL
HEX NUT ISO 4032 M6 A4-70	411517114	32	8	419	11 23 548 1	CENTRE PART CPL
HEX NUT ISO 4032 M6 A4-70	411517114	4	4	599	11 22 322 6	MODEM CPL RFK
HEX NUT ISO 4032 M6 A4-70	411517114	80	1	604	11 29 444 5	HEATING RFK
HEX NUT ISO 4032 M6 A4-70	411517114	47	10	621	10 55 372 1	ROOF RAILING RFK
HEX NUT ISO 4032 M8 A4-70	411515014	83	4	164	11 24 113 8	MOTOR BEARING CPL
HEX NUT ISO 4032 M8 A4-70	411515014	57	7	284	11 24 409 0	PANELLING SUPERSTR. INSTA
HEX NUT ISO 4032 M8 A4-70	411515014	15	26	298	10 54 591 0	MOTOR COWLING
HEX NUT ISO 4032 M8 A4-70	411515014	38	4	350	11 29 327 3	CABIN CPL
HEX NUT ISO 4032 M8 A4-70	411515014	20	2	574	10 55 753 7	HOIST LIMITSWITCH LEFT IN
HEX NUT ISO 4032 M8 A4-70	411515014	20	2	575	10 55 757 6	HOIST LIMITSWITCH RIGHT I
HEX NUT ISO 4032 M8 A4-70	411515014	61	2	621	10 55 372 1	ROOF RAILING RFK
HEX NUT ISO 4032 M8 A4-70	411515014	15	4	624	11 24 575 5	PEDESTAL
HEX NUT ISO 4032 M8 A4-70	411515014	15	2	710	10 52 155 4	REFUELLING SYSTEM RFK
HEX NUT ISO 4035 5	4900125	30	2	97	10 11 835 0	CONNECTION HOUSING
HEX NUT ISO 7042 M10 8	411880614	83	4	268	11 24 114 3	EXHAUST GAS SYSTEM
HEX NUT ISO 8673 10	4980548	26	8	95	10 11 834 9	DOUBLE V-PUMP
HEX NUT ISO 8673 8	4980986	20	1	133	10 12 226 2	REGULATION REPAIR KIT
HEX NUT M6	11290855	470	2	78	11 24 682 0	DISTRIBUTOR GEARBOX
HEX SCREW ASME B18.2.1 UN	409878414	64	4	167	10 57 532 2	INTAKE PIPE OIL CPL
HEX SCREW ASME B18.2.1 U	409878214	62	12	167	10 57 532 2	INTAKE PIPE OIL CPL
HEX SCREW DIN 6921 8.8	11004752	3	2	182	10 14 861 5	OIL SUMP PRE-ASS.
HEX SCREW DIN 6921 8.8	11004752	2	3	203	10 13 394 7	SUCTION PUMP WITH FASTEN
HEX SCREW DIN 6921 M10X25	10336008	3	3	252	10 14 637 4	LOCKING PIECES
HEX SCREW DIN 6921 M10X30	10219458	7	4	237	10 14 511 2	EXHAUST NOZZLE ATTACHM
HEX SCREW DIN 6921 M10X30	10219458	3	2	239	10 14 584 5	GENERATOR, PRE-ASSEMBLE
HEX SCREW DIN 6921 M10X35	10333464	2	3	214	10 14 679 7	FUEL FINE-FILTER ASSEMBLY
HEX SCREW DIN 6921 M10X40	10112497	17	1	204	10 13 382 3	SUCTION PUMP PRE-ASS.
HEX SCREW DIN 6921 M10X40	10112497	2	4	226	10 14 286 0	AIR COND. COMPRESSOR A
HEX SCREW DIN 6921 M10X50	10035580	6	1	175	10 14 768 6	POWER UNIT SUPPORT ATT
HEX SCREW DIN 6921 M10X70	10114153	5	9	175	10 14 768 6	POWER UNIT SUPPORT ATT
HEX SCREW DIN 6921 M10X90	10489016	4	6	220	10 14 736 6	AIR INTAKE PIPE ASS.
HEX SCREW DIN 6921 M16X50	11181806	2	2	241	10 14 286 4	TRANSPORT DEVICE ATTACH
HEX SCREW DIN 6921 M6X20	10018711	2	4	223	90 78 314	HEATING FLANGE ADD-ON
HEX SCREW DIN 6921 M8X45	10005713	2	1	202	10 13 394 5	LUBRICATING OIL PUMP
HEX SCREW DIN 6921 M8X55	10218013	3	18	199	10 12 948 1	OIL COOLER ADD-ON
HEX SCREW DIN 6921 M8X90	11066361	3	2	202	10 13 394 5	LUBRICATING OIL PUMP
HEX SCREW DIN 931 M30X250	11237759	9	4	586	79 04 112 14	BOTTOM HOOK BLOCK
HEX SCREW DIN 931 M30X310	11490268	9	4	593	79 04 871 14	BOTTOM HOOK BLOCK
HEX SCREW DIN EN 1665 M8	10005511	9	1	182	10 14 861 5	OIL SUMP PRE-ASS.
HEX SCREW EN 1665 M10X120	10037312	4	8	175	10 14 768 6	POWER UNIT SUPPORT ATT
HEX SCREW EN 1665 M10X12	10113710	4	1	239	10 14 584 5	GENERATOR, PRE-ASSEMBLE
HEX SCREW EN 1665 M10X20	10030518	2	4	228	10 14 611 7	COVERING ASSEMBLY
HEX SCREW EN 1665 M10X20	10030518	18	1	238	10 14 622 4	CYCLE VALVE
HEX SCREW EN 1665 M10X20	10030518	46	1	249	10 13 555 3	WIRING HARNESS ASSEMBLY
HEX SCREW EN 1665 M10X30	406550714	27	84	300	11 24 922 2	COVER UNDERSIDE
HEX SCREW EN 1665 M10X60	10014638	3	6	220	10 14 736 6	AIR INTAKE PIPE ASS.
HEX SCREW EN 1665 M10X60	10014638	4	2	226	10 14 286 0	AIR COND. COMPRESSOR A
HEX SCREW EN 1665 M10X80	10101657	6	1	226	10 14 286 0	AIR COND. COMPRESSOR A
HEX SCREW EN 1665 M10X80	10101657	3	4	228	10 14 611 7	COVERING ASSEMBLY
HEX SCREW EN 1665 M12X40	10045355	5	2	239	10 14 584 5	GENERATOR, PRE-ASSEMBLE
HEX SCREW EN 1665 M5X16 1	407350108	15	2	238	10 14 622 4	CYCLE VALVE
HEX SCREW EN 1665 M6X16 8.	407350208	4	1	195	10 13 475 1	CYLINDER HEAD COVER ASS
HEX SCREW EN 1665 M6X16 8.	407350208	6	1	196	10 12 653 5	CYLINDER HEAD COVER ASS
HEX SCREW EN 1665 M6X16 8.	407350208	5	1	198	10 13 469 6	CYLINDER HEAD COVER ASS

Description	Item	Pos.	Quantity	Sheet	Assembly	Description
HEX SCREW EN 1665 M6X16 8.	407350208	22	1	217	10 14 588 5	LEAK OIL RETURN LINE
HEX SCREW EN 1665 M6X16 8.	407350208	16	8	238	10 14 622 4	CYCLE VALVE
HEX SCREW EN 1665 M8X120	10017158	5	1	181	10 14 844 4	OIL SUMP WITH FASTENING
HEX SCREW EN 1665 M8X16 8.	10005078	12	3	186	10 14 671 6	OIL LINE PRE-ASSEMBLY
HEX SCREW EN 1665 M8X16 8.	10005078	18	1	217	10 14 588 5	LEAK OIL RETURN LINE
HEX SCREW EN 1665 M8X16 8.	10005078	17	4	238	10 14 622 4	CYCLE VALVE
HEX SCREW EN 1665 M8X20 8.	10016906	4	2	214	10 14 679 7	FUEL FINE-FILTER ASSEMBLY
HEX SCREW EN 1665 M8X20 8.	10016906	15	2	221	10 14 736 9	INTAKE STACK ASSEMBLY
HEX SCREW EN 1665 M8X20 8.	10016906	3	4	243	10 11 912 8	LOCKING PIECES
HEX SCREW EN 1665 M8X20 8.	10016906	3	1	244	10 12 843 9	LOCKING PIECES
HEX SCREW EN 1665 M8X25 8.	10009007	2	5	229	10 14 273 4	WATER PUMP WITH FASTENIN
HEX SCREW EN 1665 M8X25 8.	10009007	3	1	233	10 14 274 4	COOLING WATER AIR BLEED
HEX SCREW EN 1665 M8X30 8.	10007782	10	6	179	10 14 201 8	CRANKCASE BREATHER ASS
HEX SCREW EN 1665 M8X30 8.	10007782	13	3	182	10 14 861 5	OIL SUMP PRE-ASS.
HEX SCREW EN 1665 M8X30 8.	10007782	10	2	216	10 14 333 9	FUEL LINES
HEX SCREW EN 1665 M8X35 8.	10113711	2	33	181	10 14 844 4	OIL SUMP WITH FASTENING
HEX SCREW EN 1665 M8X45 8.	10016907	11	3	179	10 14 201 8	CRANKCASE BREATHER ASS
HEX SCREW EN 1665 M8X50 8.	10005073	4	4	200	10 12 948 0	OIL COOLER, PRE-ASSEMBLE
HEX SCREW EN 1665 M8X60 8.	10027420	6	1	221	10 14 736 9	INTAKE STACK ASSEMBLY
HEX SCREW EN 1665 M8X65 8.	10100304	4	2	181	10 14 844 4	OIL SUMP WITH FASTENING
HEX SCREW EN 1665 M8X90 8.	10100303	3	5	195	10 13 475 1	CYLINDER HEAD COVER ASS
HEX SCREW EN 1665 M8X90 8.	10100303	3	5	196	10 12 653 5	CYLINDER HEAD COVER ASS
HEX SCREW EN 1665 M8X90 8.	10100303	4	5	198	10 13 469 6	CYLINDER HEAD COVER ASS
HEX SCREW ISO 4014 M10X1	4002195	61	4	165	10 51 948 1	SUCTION PIPE OIL
HEX SCREW ISO 4014 M10X1	4002195	301	2	652	10 51 973 8	SELF-LOADING SYSTEM HYD
HEX SCREW ISO 4014 M12X50	4062009	61	4	168	10 58 017 0	RETURN PIPE
HEX SCREW ISO 4014 M12X65	10013916	4	1	225	90 72 906	INTERMEDIATE WHEEL CPL
HEX SCREW ISO 4014 M12X80	460023503	60	8	10	11 29 618 6	SUPERSTRUCTURE HYDR
HEX SCREW ISO 4014 M16X1	10543975	75	8	451	11 23 820 3	PIVOT PIECE CPL
HEX SCREW ISO 4014 M16X1	10543975	22	4	485	11 28 390 8	BOOM ACCESS
HEX SCREW ISO 4014 M16X1	10543975	22	4	499	11 28 583 8	BOOM ACCESS
HEX SCREW ISO 4014 M16X1	10543975	22	4	505	11 28 626 1	BOOM ACCESS
HEX SCREW ISO 4014 M24X2	10544017	63	2	164	11 24 113 8	MOTOR BEARING CPL
HEX SCREW ISO 4014 M30X1	11246658	10	64	408	10 55 876 0	CRAWLER CARRIER RIGHT CP
HEX SCREW ISO 4014 M30X1	11246658	10	64	417	10 55 876 1	CRAWLER CARRIER LEFT CP
HEX SCREW ISO 4014 M36X23	406144514	20	6	309	99 29 803 14	LASHING BALLAST
HEX SCREW ISO 4017 M10X11	10538824	51	6	164	11 24 113 8	MOTOR BEARING CPL
HEX SCREW ISO 4017 M10X11	10538824	61	2	268	11 24 114 3	EXHAUST GAS SYSTEM
HEX SCREW ISO 4017 M10X12	10539960	13	1	648	99 35 606 14	MOUNTING LINK CPL
HEX SCREW ISO 4017 M10X14	10538826	40	4	621	10 55 372 1	ROOF RAILING RFK
HEX SCREW ISO 4017 M10X16	406527314	64	2	164	11 24 113 8	MOTOR BEARING CPL
HEX SCREW ISO 4017 M10X16	406527314	29	8	512	11 28 629 9	MOUNTING PARTS
HEX SCREW ISO 4017 M10X16	406527314	11	4	513	11 28 610 5	RETAINING DEVICE CPL
HEX SCREW ISO 4017 M10X18	406527414	16	8	41	10 51 961 6	OIL COOLER INSTALLATION
HEX SCREW ISO 4017 M10X18	406527414	3	8	62	10 56 069 4	MODULES INSTALLATION
HEX SCREW ISO 4017 M10X18	406527414	57	16	164	11 24 113 8	MOTOR BEARING CPL
HEX SCREW ISO 4017 M10X20	406518714	17	8	41	10 51 961 6	OIL COOLER INSTALLATION
HEX SCREW ISO 4017 M10X20	406518714	56	4	58	10 58 163 4	CABIN SUSPENSION CPL
HEX SCREW ISO 4017 M10X20	406518714	16	4	60	10 56 067 3	BATTERY INSTALLATION CPL
HEX SCREW ISO 4017 M10X20	406518714	61	2	264	11 24 114 2	SUCTION UNIT AIR
HEX SCREW ISO 4017 M10X20	406518714	62	10	280	11 24 114 6	COVER
HEX SCREW ISO 4017 M10X20	406518714	25	12	350	11 29 327 3	CABIN CPL
HEX SCREW ISO 4017 M10X20	406518714	17	2	450	11 23 820 3	PIVOT PIECE CPL
HEX SCREW ISO 4017 M10X20	406518714	3	3	475	99 14 137 14	DEFLECTION PULLEY CPL
HEX SCREW ISO 4017 M10X20	406518714	16	8	577	99 48 521 14	TIP BOOM CPL
HEX SCREW ISO 4017 M10X20	406518714	20	1	680	11 22 344 2	CAMERA INSTALLATION
HEX SCREW ISO 4017 M10X25	4066093	64	8	168	10 58 017 0	RETURN PIPE
HEX SCREW ISO 4017 M10X25	406511914	60	12	44	10 56 070 1	TANK HYDR CPL
HEX SCREW ISO 4017 M10X25	406511914	60	6	167	10 57 532 2	INTAKE PIPE OIL CPL
HEX SCREW ISO 4017 M10X25	406511914	60	1	169	11 24 113 9	MOTOR PRE-ASSEMBLY

Description	Item	Pos.	Quantity	Sheet	Assembly	Description
HEX SCREW ISO 4017 M10X25	406511914	65	16	254	11 24 114 0	COOLER INSTALLATION WATE
HEX SCREW ISO 4017 M10X25	406511914	63	8	261	11 24 114 1	COOLER INSTALLATION CHA
HEX SCREW ISO 4017 M10X25	406511914	87	2	276	11 24 114 5	ASSEMBLY INSTAL.
HEX SCREW ISO 4017 M10X25	406511914	61	40	280	11 24 114 6	COVER
HEX SCREW ISO 4017 M10X25	406511914	23	35	282	11 24 409 0	PANELLING SUPERSTR. INSTA
HEX SCREW ISO 4017 M10X25	406511914	79	24	304	11 24 483 7	MOUNTING PARTS SUPERST
HEX SCREW ISO 4017 M10X25	406511914	30	2	450	11 23 820 3	PIVOT PIECE CPL
HEX SCREW ISO 4017 M10X25	406511914	44	4	533	11 29 426 7	MOUNTING PARTS
HEX SCREW ISO 4017 M10X25	406511914	19	12	606	10 51 743 9	ROPE LUG CPL RFK
HEX SCREW ISO 4017 M10X25	406511914	4	2	635	95 34 317 03	CABLE HOLDER RFK
HEX SCREW ISO 4017 M10X25	406511914	11	3	705	11 26 771 6	MOUNTING PARTS
HEX SCREW ISO 4017 M10X30	4066098	67	48	10	11 29 618 6	SUPERSTRUCTURE HYDR
HEX SCREW ISO 4017 M10X30	4066098	59	12	75	11 24 773 5	HYDR POWER UNIT
HEX SCREW ISO 4017 M10X30	4066098	63	12	168	10 58 017 0	RETURN PIPE
HEX SCREW ISO 4017 M10X30	406511614	18	2	41	10 51 961 6	OIL COOLER INSTALLATION
HEX SCREW ISO 4017 M10X30	406511614	53	2	164	11 24 113 8	MOTOR BEARING CPL
HEX SCREW ISO 4017 M10X30	406511614	66	8	254	11 24 114 0	COOLER INSTALLATION WATE
HEX SCREW ISO 4017 M10X30	406511614	60	14	268	11 24 114 3	EXHAUST GAS SYSTEM
HEX SCREW ISO 4017 M10X30	406511614	60	4	280	11 24 114 6	COVER
HEX SCREW ISO 4017 M10X30	406511614	31	28	282	11 24 409 0	PANELLING SUPERSTR. INSTA
HEX SCREW ISO 4017 M10X30	406511614	80	46	304	11 24 483 7	MOUNTING PARTS SUPERST
HEX SCREW ISO 4017 M10X30	406511614	13	16	308	10 52 656 0	MOUNTING PARTS
HEX SCREW ISO 4017 M10X30	406511614	94	2	451	11 23 820 3	PIVOT PIECE CPL
HEX SCREW ISO 4017 M10X30	406511614	16	2	491	11 28 794 6	TRANSPORT LASHING
HEX SCREW ISO 4017 M10X30	406511614	14	4	554	11 28 979 0	GRATING CARRIER
HEX SCREW ISO 4017 M10X30	406511614	16	2	557	11 28 982 7	TRANSPORT LASHING
HEX SCREW ISO 4017 M10X35	4001246	55	16	10	11 29 618 6	SUPERSTRUCTURE HYDR
HEX SCREW ISO 4017 M10X35	4001246	52	4	75	11 24 773 5	HYDR POWER UNIT
HEX SCREW ISO 4017 M10X35	4001246	6	16	344	10 55 216 1	TUBING HYDR
HEX SCREW ISO 4017 M10X35	4001246	670	4	465	10 51 959 1	TUBING HYDR
HEX SCREW ISO 4017 M10X35	4001246	616	4	652	10 51 973 8	SELF-LOADING SYSTEM HYD
HEX SCREW ISO 4017 M10X35	406509314	67	6	254	11 24 114 0	COOLER INSTALLATION WATE
HEX SCREW ISO 4017 M10X35	406509314	64	2	261	11 24 114 1	COOLER INSTALLATION CHA
HEX SCREW ISO 4017 M10X35	406509314	63	2	280	11 24 114 6	COVER
HEX SCREW ISO 4017 M10X35	406509314	17	12	298	10 54 591 0	MOTOR COWLING
HEX SCREW ISO 4017 M10X35	406509314	81	23	304	11 24 483 7	MOUNTING PARTS SUPERST
HEX SCREW ISO 4017 M10X35	406509314	87	16	451	11 23 820 3	PIVOT PIECE CPL
HEX SCREW ISO 4017 M10X35	406509314	14	2	487	11 28 397 7	SUMP PAN CPL
HEX SCREW ISO 4017 M10X35	406509314	14	2	488	11 28 397 8	SUMP PAN CPL
HEX SCREW ISO 4017 M10X35	406509314	14	4	489	11 28 399 5	SUMP PAN CPL
HEX SCREW ISO 4017 M10X35	406509314	14	4	490	11 28 399 7	SUMP PAN CPL
HEX SCREW ISO 4017 M10X35	406509314	12	2	706	10 52 293 0	SG TACHOGENERATOR RFK
HEX SCREW ISO 4017 M10X40	10539971	11	1	522	99 30 800 14	HOIST LIMIT SWITCH INSTAL.
HEX SCREW ISO 4017 M10X40	10539971	14	1	574	10 55 753 7	HOIST LIMITSWITCH LEFT IN
HEX SCREW ISO 4017 M10X40	10539971	14	1	575	10 55 757 6	HOIST LIMITSWITCH RIGHT I
HEX SCREW ISO 4017 M10X40	10539971	45	1	577	99 48 521 14	TIP BOOM CPL
HEX SCREW ISO 4017 M10X40	406527814	45	4	284	11 24 409 0	PANELLING SUPERSTR. INSTA
HEX SCREW ISO 4017 M10X40	406527814	82	8	304	11 24 483 7	MOUNTING PARTS SUPERST
HEX SCREW ISO 4017 M10X40	406527814	4	3	475	99 14 137 14	DEFLECTION PULLEY CPL
HEX SCREW ISO 4017 M10X45	406512014	19	2	41	10 51 961 6	OIL COOLER INSTALLATION
HEX SCREW ISO 4017 M10X45	406512014	54	31	284	11 24 409 0	PANELLING SUPERSTR. INSTA
HEX SCREW ISO 4017 M10X45	406512014	19	8	298	10 54 591 0	MOTOR COWLING
HEX SCREW ISO 4017 M10X45	406512014	83	1	304	11 24 483 7	MOUNTING PARTS SUPERST
HEX SCREW ISO 4017 M10X50	406518614	24	5	282	11 24 409 0	PANELLING SUPERSTR. INSTA
HEX SCREW ISO 4017 M10X50	406518614	21	2	298	10 54 591 0	MOTOR COWLING
HEX SCREW ISO 4017 M10X50	406518614	47	8	637	99 10 116 14	ROPE GUIDE
HEX SCREW ISO 4017 M10X55	10538822	50	8	637	99 10 116 14	ROPE GUIDE
HEX SCREW ISO 4017 M10X55	10538822	14	2	705	11 26 771 6	MOUNTING PARTS
HEX SCREW ISO 4017 M10X60	10539959	14	8	298	10 54 591 0	MOTOR COWLING
HEX SCREW ISO 4017 M10X60	10539959	41	34	621	10 55 372 1	ROOF RAILING RFK

Description	Item	Pos.	Quantity	Sheet	Assembly	Description
HEX SCREW ISO 4017 M10X65	10538823	62	4	264	11 24 114 2	SUCTION UNIT AIR
HEX SCREW ISO 4017 M10X65	10538823	9	4	516	11 28 357 6	MOUNTING PARTS
HEX SCREW ISO 4017 M10X70	406511214	88	6	276	11 24 114 5	ASSEMBLY INSTAL.
HEX SCREW ISO 4017 M10X75	10539293	17	6	60	10 56 067 3	BATTERY INSTALLATION CPL
HEX SCREW ISO 4017 M10X75	10539293	100	1	304	11 24 483 7	MOUNTING PARTS SUPERST
HEX SCREW ISO 4017 M10X75	10539293	63	2	604	11 29 444 5	HEATING RFK
HEX SCREW ISO 4017 M10X75	10539293	8	2	650	11 23 619 7	SELF-LOADING SYSTEM RFK
HEX SCREW ISO 4017 M10X80	406527914	3	1	50	10 55 268 1	DRIVER INSTALLATION
HEX SCREW ISO 4017 M10X80	406527914	68	4	254	11 24 114 0	COOLER INSTALLATION WATE
HEX SCREW ISO 4017 M10X80	406527914	14	2	480	10 35 063 3	FASTENER
HEX SCREW ISO 4017 M10X80	406527914	38	16	621	10 55 372 1	ROOF RAILING RFK
HEX SCREW ISO 4017 M10X90	406512114	14	2	479	99 29 588 14	SUPPORT
HEX SCREW ISO 4017 M12X13	10538834	24	8	419	11 23 548 1	CENTRE PART CPL
HEX SCREW ISO 4017 M12X16	406528014	5	2	385	10 53 756 0	LAMP HOLDER CPL
HEX SCREW ISO 4017 M12X20	406517714	21	2	58	10 58 163 4	CABIN SUSPENSION CPL
HEX SCREW ISO 4017 M12X20	406517714	65	2	261	11 24 114 1	COOLER INSTALLATION CHA
HEX SCREW ISO 4017 M12X20	406517714	23	12	309	99 29 803 14	LASHING BALLAST
HEX SCREW ISO 4017 M12X20	406517714	38	4	525	11 24 336 5	PIVOT PIECE NEEDLE CPL
HEX SCREW ISO 4017 M12X25	4980977	46	4	127	10 12 224 5	REPAIR KIT LEVER
HEX SCREW ISO 4017 M12X25	406517914	56	4	164	11 24 113 8	MOTOR BEARING CPL
HEX SCREW ISO 4017 M12X25	406517914	24	7	408	10 55 876 0	CRAWLER CARRIER RIGHT CP
HEX SCREW ISO 4017 M12X25	406517914	24	7	417	10 55 876 1	CRAWLER CARRIER LEFT CP
HEX SCREW ISO 4017 M12X25	406517914	14	8	473	11 24 444 4	A-FRAME 1 CPL
HEX SCREW ISO 4017 M12X25	406517914	28	8	521	99 23 398 14	ROLLER SET
HEX SCREW ISO 4017 M12X25	406517914	24	8	633	10 51 176 9	NEEDLE BOOM CPL
HEX SCREW ISO 4017 M12X30	4066124	56	12	75	11 24 773 5	HYDR POWER UNIT
HEX SCREW ISO 4017 M12X30	406517314	62	12	44	10 56 070 1	TANK HYDR CPL
HEX SCREW ISO 4017 M12X30	406517314	73	3	304	11 24 483 7	MOUNTING PARTS SUPERST
HEX SCREW ISO 4017 M12X30	406517314	2	8	329	99 29 258 14	LUG SHEAVE SET
HEX SCREW ISO 4017 M12X30	406517314	15	2	388	99 18 041 14	LASHING SUPERSTRUCTURE
HEX SCREW ISO 4017 M12X30	406517314	18	152	408	10 55 876 0	CRAWLER CARRIER RIGHT CP
HEX SCREW ISO 4017 M12X30	406517314	18	152	417	10 55 876 1	CRAWLER CARRIER LEFT CP
HEX SCREW ISO 4017 M12X30	406517314	22	16	419	11 23 548 1	CENTRE PART CPL
HEX SCREW ISO 4017 M12X30	406517314	16	4	424	11 22 050 0	WINCHES INSTALLATION
HEX SCREW ISO 4017 M12X30	406517314	16	4	439	11 22 050 1	WINCHES INSTALLATION
HEX SCREW ISO 4017 M12X30	406517314	16	4	450	11 23 820 3	PIVOT PIECE CPL
HEX SCREW ISO 4017 M12X30	406517314	30	4	525	11 24 336 5	PIVOT PIECE NEEDLE CPL
HEX SCREW ISO 4017 M12X30	406517314	32	4	526	10 53 140 9	PIVOT PIECE EL
HEX SCREW ISO 4017 M12X30	406517314	41	12	570	11 28 774 6	MOUNTING PARTS
HEX SCREW ISO 4017 M12X30	406517314	15	2	577	99 48 521 14	TIP BOOM CPL
HEX SCREW ISO 4017 M12X30	406517314	29	6	633	10 51 176 9	NEEDLE BOOM CPL
HEX SCREW ISO 4017 M12X35	4066122	65	8	10	11 29 618 6	SUPERSTRUCTURE HYDR
HEX SCREW ISO 4017 M12X35	4066122	65	6	168	10 58 017 0	RETURN PIPE
HEX SCREW ISO 4017 M12X35	406518414	89	1	276	11 24 114 5	ASSEMBLY INSTAL.
HEX SCREW ISO 4017 M12X35	406518414	18	4	450	11 23 820 3	PIVOT PIECE CPL
HEX SCREW ISO 4017 M12X35	406518414	11	2	574	10 55 753 7	HOIST LIMITSWITCH LEFT IN
HEX SCREW ISO 4017 M12X35	406518414	11	2	575	10 55 757 6	HOIST LIMITSWITCH RIGHT I
HEX SCREW ISO 4017 M12X40	4600366	61	36	10	11 29 618 6	SUPERSTRUCTURE HYDR
HEX SCREW ISO 4017 M12X40	4600366	613	8	312	10 51 969 8	NEEDLE LUFFING WINCH HYD
HEX SCREW ISO 4017 M12X40	4600366	7	8	344	10 55 216 1	TUBING HYDR
HEX SCREW ISO 4017 M12X40	406511414	67	8	164	11 24 113 8	MOTOR BEARING CPL
HEX SCREW ISO 4017 M12X40	406511414	60	6	165	10 51 948 1	SUCTION PIPE OIL
HEX SCREW ISO 4017 M12X40	406511414	22	3	320	10 51 968 6	LUG SUPERSTRUCTURE CPL
HEX SCREW ISO 4017 M12X40	406511414	49	2	450	11 23 820 3	PIVOT PIECE CPL
HEX SCREW ISO 4017 M12X40	406511414	47	2	582	99 38 329 14	TIP BOOM CPL
HEX SCREW ISO 4017 M12X45	4600706	17	4	311	10 51 969 7	NEEDLE LUFFING WINCH
HEX SCREW ISO 4017 M12X45	406519214	62	4	268	11 24 114 3	EXHAUST GAS SYSTEM
HEX SCREW ISO 4017 M12X50	406512614	66	1	261	11 24 114 1	COOLER INSTALLATION CHA
HEX SCREW ISO 4017 M12X50	406512614	22	4	582	99 38 329 14	TIP BOOM CPL
HEX SCREW ISO 4017 M12X55	4902260	60	10	168	10 58 017 0	RETURN PIPE

Description	Item	Pos.	Quantity	Sheet	Assembly	Description
HEX SCREW ISO 4017 M12X55	406527614	35	4	58	10 58 163 4	CABIN SUSPENSION CPL
HEX SCREW ISO 4017 M12X60	10538828	16	2	537	99 35 031 14	ROPE GUARD CPL
HEX SCREW ISO 4017 M12X65	406606414	56	16	10	11 29 618 6	SUPERSTRUCTURE HYDR
HEX SCREW ISO 4017 M12X80	10538830	74	8	304	11 24 483 7	MOUNTING PARTS SUPERST
HEX SCREW ISO 4017 M14X1	10539311	6	6	321	10 51 968 7	MAIN LUG HYDR
HEX SCREW ISO 4017 M14X30	10539297	17	4	529	11 29 649 2	PIN CPL
HEX SCREW ISO 4017 M14X45	10539300	62	24	10	11 29 618 6	SUPERSTRUCTURE HYDR
HEX SCREW ISO 4017 M14X45	10539300	615	2	321	10 51 968 7	MAIN LUG HYDR
HEX SCREW ISO 4017 M14X45	10539300	19	16	392	11 25 903 1	TUBING HYDR
HEX SCREW ISO 4017 M14X45	10539300	750	8	435	11 26 260 6	WINCH 1 HYDR
HEX SCREW ISO 4017 M14X45	10539300	750	16	441	11 26 261 1	WINCH 2 HYDR
HEX SCREW ISO 4017 M14X70	10539305	17	8	392	11 25 903 1	TUBING HYDR
HEX SCREW ISO 4017 M14X90	10539307	10	4	435	11 26 260 6	WINCH 1 HYDR
HEX SCREW ISO 4017 M14X90	10539307	10	4	441	11 26 261 1	WINCH 2 HYDR
HEX SCREW ISO 4017 M16X1	10543914	62	2	164	11 24 113 8	MOTOR BEARING CPL
HEX SCREW ISO 4017 M16X25	10539315	62	4	169	11 24 113 9	MOTOR PRE-ASSEMBLY
HEX SCREW ISO 4017 M16X25	10539315	29	2	320	10 51 968 6	LUG SUPERSTRUCTURE CPL
HEX SCREW ISO 4017 M16X25	10539315	35	4	408	10 55 876 0	CRAWLER CARRIER RIGHT CP
HEX SCREW ISO 4017 M16X25	10539315	35	4	417	10 55 876 1	CRAWLER CARRIER LEFT CP
HEX SCREW ISO 4017 M16X30	10539316	4	4	50	10 55 268 1	DRIVER INSTALLATION
HEX SCREW ISO 4017 M16X30	10539316	35	4	533	11 29 426 7	MOUNTING PARTS
HEX SCREW ISO 4017 M16X30	10539316	43	2	541	11 29 938 4	MOUNTING PARTS
HEX SCREW ISO 4017 M16X30	10539316	29	8	665	11 89 568 6	SELF-LOADING SYSTEM RFK
HEX SCREW ISO 4017 M16X35	10539317	60	6	47	10 56 073 2	FUEL TANK ASSY.
HEX SCREW ISO 4017 M16X35	10539317	59	8	164	11 24 113 8	MOTOR BEARING CPL
HEX SCREW ISO 4017 M16X35	10539317	103	2	304	11 24 483 7	MOUNTING PARTS SUPERST
HEX SCREW ISO 4017 M16X35	10539317	52	54	408	10 55 876 0	CRAWLER CARRIER RIGHT CP
HEX SCREW ISO 4017 M16X35	10539317	52	54	417	10 55 876 1	CRAWLER CARRIER LEFT CP
HEX SCREW ISO 4017 M16X35	10539317	31	2	521	99 23 398 14	ROLLER SET
HEX SCREW ISO 4017 M16X35	10539317	14	5	527	11 29 648 5	PIN CPL
HEX SCREW ISO 4017 M16X35	10539317	45	8	533	11 29 426 7	MOUNTING PARTS
HEX SCREW ISO 4017 M16X35	10539317	35	8	541	11 29 938 4	MOUNTING PARTS
HEX SCREW ISO 4017 M16X40	10539318	58	8	164	11 24 113 8	MOTOR BEARING CPL
HEX SCREW ISO 4017 M16X40	10539318	17	28	419	11 23 548 1	CENTRE PART CPL
HEX SCREW ISO 4017 M16X40	10539318	38	2	521	99 23 398 14	ROLLER SET
HEX SCREW ISO 4017 M16X45	10543902	60	12	164	11 24 113 8	MOTOR BEARING CPL
HEX SCREW ISO 4017 M16X45	10543902	15	4	341	10 51 968 2	SG SUPERSTRUCTURE
HEX SCREW ISO 4017 M16X45	10543902	39	4	521	99 23 398 14	ROLLER SET
HEX SCREW ISO 4017 M16X50	10543903	62	3	42	10 56 070 0	TANK INSTALLATION HYDR
HEX SCREW ISO 4017 M16X50	10543903	13	4	320	10 51 968 6	LUG SUPERSTRUCTURE CPL
HEX SCREW ISO 4017 M16X55	10543904	63	3	42	10 56 070 0	TANK INSTALLATION HYDR
HEX SCREW ISO 4017 M16X60	10543905	61	8	164	11 24 113 8	MOTOR BEARING CPL
HEX SCREW ISO 4017 M16X60	10543905	28	12	320	10 51 968 6	LUG SUPERSTRUCTURE CPL
HEX SCREW ISO 4017 M16X70	10543907	57	4	75	11 24 773 5	HYDR POWER UNIT
HEX SCREW ISO 4017 M16X90	10543910	27	8	408	10 55 876 0	CRAWLER CARRIER RIGHT CP
HEX SCREW ISO 4017 M16X90	10543910	27	8	417	10 55 876 1	CRAWLER CARRIER LEFT CP
HEX SCREW ISO 4017 M20X1	10543932	4	4	408	10 55 876 0	CRAWLER CARRIER RIGHT CP
HEX SCREW ISO 4017 M20X1	10543932	4	4	417	10 55 876 1	CRAWLER CARRIER LEFT CP
HEX SCREW ISO 4017 M20X25	10543917	4	1	433	10 57 462 9	PIN CPL
HEX SCREW ISO 4017 M20X30	10543918	48	2	637	99 10 116 14	ROPE GUIDE
HEX SCREW ISO 4017 M20X35	10543919	63	2	264	11 24 114 2	SUCTION UNIT AIR
HEX SCREW ISO 4017 M20X35	10543919	48	2	473	11 24 444 4	A-FRAME 1 CPL
HEX SCREW ISO 4017 M20X35	10543919	43	1	582	99 38 329 14	TIP BOOM CPL
HEX SCREW ISO 4017 M20X35	10543919	51	2	637	99 10 116 14	ROPE GUIDE
HEX SCREW ISO 4017 M20X40	10543920	14	22	320	10 51 968 6	LUG SUPERSTRUCTURE CPL
HEX SCREW ISO 4017 M20X40	10543920	44	4	408	10 55 876 0	CRAWLER CARRIER RIGHT CP
HEX SCREW ISO 4017 M20X40	10543920	87	2	412	96 93 178 01	TRACTION DRIVE
HEX SCREW ISO 4017 M20X40	10543920	41	4	417	10 55 876 1	CRAWLER CARRIER LEFT CP
HEX SCREW ISO 4017 M20X45	10543921	18	4	419	11 23 548 1	CENTRE PART CPL
HEX SCREW ISO 4017 M20X45	10543921	49	2	473	11 24 444 4	A-FRAME 1 CPL

Description	Item	Pos.	Quantity	Sheet	Assembly	Description
HEX SCREW ISO 4017 M20X50	10543922	58	4	75	11 24 773 5	HYDR POWER UNIT
HEX SCREW ISO 4017 M20X50	10543922	25	4	606	10 51 743 9	ROPE LUG CPL RFK
HEX SCREW ISO 4017 M20X60	10543924	15	4	424	11 22 050 0	WINCHES INSTALLATION
HEX SCREW ISO 4017 M20X60	10543924	15	4	439	11 22 050 1	WINCHES INSTALLATION
HEX SCREW ISO 4017 M20X65	10543925	68	12	412	96 93 178 01	TRACTION DRIVE
HEX SCREW ISO 4017 M20X75	10545854	22	2	408	10 55 876 0	CRAWLER CARRIER RIGHT CP
HEX SCREW ISO 4017 M20X75	10545854	22	2	417	10 55 876 1	CRAWLER CARRIER LEFT CP
HEX SCREW ISO 4017 M20X75	10545854	47	4	473	11 24 444 4	A-FRAME 1 CPL
HEX SCREW ISO 4017 M24X80	10543944	25	12	408	10 55 876 0	CRAWLER CARRIER RIGHT CP
HEX SCREW ISO 4017 M24X80	10543944	25	12	417	10 55 876 1	CRAWLER CARRIER LEFT CP
HEX SCREW ISO 4017 M5X12	11250998	468	8	78	11 24 682 0	DISTRIBUTOR GEARBOX
HEX SCREW ISO 4017 M5X12	485553914	16	3	706	10 52 293 0	SG TACHOGENERATOR RFK
HEX SCREW ISO 4017 M5X16	406501914	50	4	633	10 51 176 9	NEEDLE BOOM CPL
HEX SCREW ISO 4017 M5X20	406501814	22	2	60	10 56 067 3	BATTERY INSTALLATION CPL
HEX SCREW ISO 4017 M5X20	406501814	62	8	450	11 23 820 3	PIVOT PIECE CPL
HEX SCREW ISO 4017 M5X55	10567564	30	3	665	11 89 568 6	SELF-LOADING SYSTEM RFK
HEX SCREW ISO 4017 M6X12	485557714	29	12	350	11 29 327 3	CABIN CPL
HEX SCREW ISO 4017 M6X12	485557714	5	2	599	11 22 322 6	MODEM CPL RFK
HEX SCREW ISO 4017 M6X16	406501714	79	5	276	11 24 114 5	ASSEMBLY INSTAL.
HEX SCREW ISO 4017 M6X16	406501714	22	14	350	11 29 327 3	CABIN CPL
HEX SCREW ISO 4017 M6X16	406501714	4	8	385	10 53 756 0	LAMP HOLDER CPL
HEX SCREW ISO 4017 M6X16	406501714	18	3	686	10 58 064 7	VIDEO MONITORING SYSTEM
HEX SCREW ISO 4017 M6X20	406532614	68	1	304	11 24 483 7	MOUNTING PARTS SUPERST
HEX SCREW ISO 4017 M6X20	406532614	13	3	424	11 22 050 0	WINCHES INSTALLATION
HEX SCREW ISO 4017 M6X20	406532614	13	3	439	11 22 050 1	WINCHES INSTALLATION
HEX SCREW ISO 4017 M6X20	406532614	60	24	450	11 23 820 3	PIVOT PIECE CPL
HEX SCREW ISO 4017 M6X20	406532614	13	18	459	10 58 193 7	GRATING CPL
HEX SCREW ISO 4017 M6X20	406532614	30	8	473	11 24 444 4	A-FRAME 1 CPL
HEX SCREW ISO 4017 M6X20	406532614	68	4	525	11 24 336 5	PIVOT PIECE NEEDLE CPL
HEX SCREW ISO 4017 M6X20	406532614	24	2	606	10 51 743 9	ROPE LUG CPL RFK
HEX SCREW ISO 4017 M6X20	406532614	17	3	680	11 22 344 2	CAMERA INSTALLATION
HEX SCREW ISO 4017 M6X20	406532614	21	3	686	10 58 064 7	VIDEO MONITORING SYSTEM
HEX SCREW ISO 4017 M6X20	406532614	4	4	706	10 52 293 0	SG TACHOGENERATOR RFK
HEX SCREW ISO 4017 M6X25	406518514	63	3	268	11 24 114 3	EXHAUST GAS SYSTEM
HEX SCREW ISO 4017 M6X25	406518514	80	10	276	11 24 114 5	ASSEMBLY INSTAL.
HEX SCREW ISO 4017 M6X30	10538797	2	4	599	11 22 322 6	MODEM CPL RFK
HEX SCREW ISO 4017 M6X30	10538797	60	1	604	11 29 444 5	HEATING RFK
HEX SCREW ISO 4017 M6X35	406551114	69	2	304	11 24 483 7	MOUNTING PARTS SUPERST
HEX SCREW ISO 4017 M6X45	10538799	83	4	276	11 24 114 5	ASSEMBLY INSTAL.
HEX SCREW ISO 4017 M6X45	10538799	9	4	550	99 31 679 14	SUPPORT SYSTEM CPL
HEX SCREW ISO 4017 M6X50	10526837	55	1	350	11 29 327 3	CABIN CPL
HEX SCREW ISO 4017 M6X50	10526837	13	16	419	11 23 548 1	CENTRE PART CPL
HEX SCREW ISO 4017 M6X60	10538801	31	8	419	11 23 548 1	CENTRE PART CPL
HEX SCREW ISO 4017 M8X10	10538806	33	2	637	99 10 116 14	ROPE GUIDE
HEX SCREW ISO 4017 M8X100	10538812	29	4	450	11 23 820 3	PIVOT PIECE CPL
HEX SCREW ISO 4017 M8X12	406501614	10	4	513	11 28 610 5	RETAINING DEVICE CPL
HEX SCREW ISO 4017 M8X16	406501514	11	2	56	92 65 477 14	FIRE EXTINGUISHER RFK
HEX SCREW ISO 4017 M8X16	406501514	66	6	58	10 58 163 4	CABIN SUSPENSION CPL
HEX SCREW ISO 4017 M8X16	406501514	59	6	254	11 24 114 0	COOLER INSTALLATION WATE
HEX SCREW ISO 4017 M8X16	406501514	18	6	341	10 51 968 2	SG SUPERSTRUCTURE
HEX SCREW ISO 4017 M8X16	406501514	39	5	350	11 29 327 3	CABIN CPL
HEX SCREW ISO 4017 M8X16	406501514	3	2	386	11 30 962 5	HOLDER CPL
HEX SCREW ISO 4017 M8X16	406501514	26	4	665	11 89 568 6	SELF-LOADING SYSTEM RFK
HEX SCREW ISO 4017 M8X16	406501514	6	1	687	10 57 848 6	MONITOR CABIN ADD-ON
HEX SCREW ISO 4017 M8X20	406518814	54	4	164	11 24 113 8	MOTOR BEARING CPL
HEX SCREW ISO 4017 M8X20	406518814	81	4	276	11 24 114 5	ASSEMBLY INSTAL.
HEX SCREW ISO 4017 M8X20	406518814	94	8	304	11 24 483 7	MOUNTING PARTS SUPERST
HEX SCREW ISO 4017 M8X20	406518814	23	4	470	11 27 536 5	TILT-BACK SUPPORTS INSTAL
HEX SCREW ISO 4017 M8X20	406518814	20	6	686	10 58 064 7	VIDEO MONITORING SYSTEM
HEX SCREW ISO 4017 M8X20	406518814	14	3	706	10 52 293 0	SG TACHOGENERATOR RFK

Description	Item	Pos.	Quantity	Sheet	Assembly	Description
HEX SCREW ISO 4017 M8X25	406501414	65	8	164	11 24 113 8	MOTOR BEARING CPL
HEX SCREW ISO 4017 M8X25	406501414	60	4	261	11 24 114 1	COOLER INSTALLATION CHA
HEX SCREW ISO 4017 M8X25	406501414	60	2	262	11 28 574 7	WP
HEX SCREW ISO 4017 M8X25	406501414	60	4	264	11 24 114 2	SUCTION UNIT AIR
HEX SCREW ISO 4017 M8X25	406501414	35	11	282	11 24 409 0	PANELLING SUPERSTR. INSTA
HEX SCREW ISO 4017 M8X25	406501414	95	2	304	11 24 483 7	MOUNTING PARTS SUPERST
HEX SCREW ISO 4017 M8X25	406501414	15	2	311	10 51 969 7	NEEDLE LUFFING WINCH
HEX SCREW ISO 4017 M8X25	406501414	26	19	350	11 29 327 3	CABIN CPL
HEX SCREW ISO 4017 M8X25	406501414	11	6	419	11 23 548 1	CENTRE PART CPL
HEX SCREW ISO 4017 M8X25	406501414	69	11	450	11 23 820 3	PIVOT PIECE CPL
HEX SCREW ISO 4017 M8X25	406501414	25	1	485	11 28 390 8	BOOM ACCESS
HEX SCREW ISO 4017 M8X25	406501414	25	1	499	11 28 583 8	BOOM ACCESS
HEX SCREW ISO 4017 M8X25	406501414	25	1	505	11 28 626 1	BOOM ACCESS
HEX SCREW ISO 4017 M8X25	406501414	32	5	525	11 24 336 5	PIVOT PIECE NEEDLE CPL
HEX SCREW ISO 4017 M8X25	406501414	22	4	606	10 51 743 9	ROPE LUG CPL RFK
HEX SCREW ISO 4017 M8X25	406501414	45	40	621	10 55 372 1	ROOF RAILING RFK
HEX SCREW ISO 4017 M8X25	406501414	33	2	686	10 58 064 7	VIDEO MONITORING SYSTEM
HEX SCREW ISO 4017 M8X30 1	4062002	64	16	10	11 29 618 6	SUPERSTRUCTURE HYDR
HEX SCREW ISO 4017 M8X30	406501314	12	2	53	11 26 557 2	MOUNTING PARTS
HEX SCREW ISO 4017 M8X30	406501314	28	2	58	10 58 163 4	CABIN SUSPENSION CPL
HEX SCREW ISO 4017 M8X30	406501314	66	2	164	11 24 113 8	MOTOR BEARING CPL
HEX SCREW ISO 4017 M8X30	406501314	63	8	254	11 24 114 0	COOLER INSTALLATION WATE
HEX SCREW ISO 4017 M8X30	406501314	61	6	261	11 24 114 1	COOLER INSTALLATION CHA
HEX SCREW ISO 4017 M8X30	406501314	82	4	276	11 24 114 5	ASSEMBLY INSTAL.
HEX SCREW ISO 4017 M8X30	406501314	96	10	304	11 24 483 7	MOUNTING PARTS SUPERST
HEX SCREW ISO 4017 M8X30	406501314	20	4	422	99 26 718 14	PEDESTAL
HEX SCREW ISO 4017 M8X30	406501314	21	10	450	11 23 820 3	PIVOT PIECE CPL
HEX SCREW ISO 4017 M8X30	406501314	12	3	526	10 53 140 9	PIVOT PIECE EL
HEX SCREW ISO 4017 M8X30	406501314	11	2	530	11 29 451 7	ROPE GUARD CPL
HEX SCREW ISO 4017 M8X30	406501314	11	2	536	11 29 488 4	ROPE GUARD CPL
HEX SCREW ISO 4017 M8X30	406501314	39	3	570	11 28 774 6	MOUNTING PARTS
HEX SCREW ISO 4017 M8X30	406501314	11	2	572	11 29 457 3	ROPE GUARD CPL
HEX SCREW ISO 4017 M8X30	406501314	11	2	573	11 29 462 6	ROPE GUARD CPL
HEX SCREW ISO 4017 M8X30	406501314	34	4	577	99 48 521 14	TIP BOOM CPL
HEX SCREW ISO 4017 M8X30	406501314	62	7	604	11 29 444 5	HEATING RFK
HEX SCREW ISO 4017 M8X30	406501314	21	6	606	10 51 743 9	ROPE LUG CPL RFK
HEX SCREW ISO 4017 M8X30	406501314	32	2	637	99 10 116 14	ROPE GUIDE
HEX SCREW ISO 4017 M8X30	406501314	5	4	691	99 21 973 14	DRIVER'S SEAT RFK
HEX SCREW ISO 4017 M8X35	406517614	62	4	261	11 24 114 1	COOLER INSTALLATION CHA
HEX SCREW ISO 4017 M8X35	406517614	97	2	304	11 24 483 7	MOUNTING PARTS SUPERST
HEX SCREW ISO 4017 M8X35	406517614	13	2	495	11 23 292 2	SUPPORT CPL
HEX SCREW ISO 4017 M8X35	406517614	13	2	710	10 52 155 4	REFUELLING SYSTEM RFK
HEX SCREW ISO 4017 M8X40	406532914	98	1	304	11 24 483 7	MOUNTING PARTS SUPERST
HEX SCREW ISO 4017 M8X40	406532914	18	2	459	10 58 193 7	GRATING CPL
HEX SCREW ISO 4017 M8X40	406532914	27	4	512	11 28 629 9	MOUNTING PARTS
HEX SCREW ISO 4017 M8X45	406508014	61	3	450	11 23 820 3	PIVOT PIECE CPL
HEX SCREW ISO 4017 M8X45	406508014	56	4	525	11 24 336 5	PIVOT PIECE NEEDLE CPL
HEX SCREW ISO 4017 M8X45	406508014	46	2	621	10 55 372 1	ROOF RAILING RFK
HEX SCREW ISO 4017 M8X50	10538807	36	5	282	11 24 409 0	PANELLING SUPERSTR. INSTA
HEX SCREW ISO 4017 M8X50	10538807	13	16	422	99 26 718 14	PEDESTAL
HEX SCREW ISO 4017 M8X50	10538807	54	17	450	11 23 820 3	PIVOT PIECE CPL
HEX SCREW ISO 4017 M8X50	10538807	24	3	485	11 28 390 8	BOOM ACCESS
HEX SCREW ISO 4017 M8X50	10538807	24	3	499	11 28 583 8	BOOM ACCESS
HEX SCREW ISO 4017 M8X50	10538807	24	3	505	11 28 626 1	BOOM ACCESS
HEX SCREW ISO 4017 M8X50	10538807	11	2	525	11 24 336 5	PIVOT PIECE NEEDLE CPL
HEX SCREW ISO 4017 M8X50	10538807	15	4	554	11 28 979 0	GRATING CARRIER
HEX SCREW ISO 4017 M8X50	10538807	11	12	623	11 24 147 8	UC PLATFORM
HEX SCREW ISO 4017 M8X50	10538807	11	16	624	11 24 575 5	PEDESTAL
HEX SCREW ISO 4017 M8X55	10331506	39	6	282	11 24 409 0	PANELLING SUPERSTR. INSTA
HEX SCREW ISO 4017 M8X55	10331506	20	19	450	11 23 820 3	PIVOT PIECE CPL

Description	Item	Pos.	Quantity	Sheet	Assembly	Description
HEX SCREW ISO 4017 M8X55	10331506	13	8	461	99 34 198 14	LIEBHERR SIGN
HEX SCREW ISO 4017 M8X60	10538808	34	2	541	11 29 938 4	MOUNTING PARTS
HEX SCREW ISO 4017 M8X60	10538808	49	2	577	99 48 521 14	TIP BOOM CPL
HEX SCREW ISO 4017 M8X60	10538808	14	2	633	10 51 176 9	NEEDLE BOOM CPL
HEX SCREW ISO 4017 M8X65	10331507	11	6	298	10 54 591 0	MOTOR COWLING
HEX SCREW ISO 4017 M8X65	10331507	10	2	335	99 29 386 14	BRACKET CPL
HEX SCREW ISO 4017 M8X65	10331507	10	2	336	99 29 434 14	BRACKET CPL
HEX SCREW ISO 4017 M8X65	10331507	13	2	486	11 28 391 3	FIXING CLAMP
HEX SCREW ISO 4017 M8X65	10331507	17	2	522	99 30 800 14	HOIST LIMIT SWITCH INSTAL.
HEX SCREW ISO 4017 M8X65	10331507	13	2	555	11 28 667 9	FIXING CLAMP
HEX SCREW ISO 4017 M8X65	10331507	13	2	574	10 55 753 7	HOIST LIMITSWITCH LEFT IN
HEX SCREW ISO 4017 M8X65	10331507	13	2	575	10 55 757 6	HOIST LIMITSWITCH RIGHT I
HEX SCREW ISO 4017 M8X75	10541592	22	4	650	11 23 619 7	SELF-LOADING SYSTEM RFK
HEX SCREW ISO 4017 M8X80	10538809	50	2	164	11 24 113 8	MOTOR BEARING CPL
HEX SCREW ISO 4017 M8X80	10538809	64	2	254	11 24 114 0	COOLER INSTALLATION WATE
HEX SCREW ISO 4017 M8X80	10538809	60	2	270	11 24 114 4	FUEL SYSTEM
HEX SCREW ISO 4017 M8X80	10538809	13	2	484	11 28 725 5	ROPE GUARD CPL
HEX SCREW ISO 4017 M8X85	10541593	85	6	276	11 24 114 5	ASSEMBLY INSTAL.
HEX SCREW ISO 4017 M8X85	10541593	42	4	577	99 48 521 14	TIP BOOM CPL
HEX SCREW ISO 4017 M8X90	10538810	37	2	450	11 23 820 3	PIVOT PIECE CPL
HEX SCREW ISO 8765 M24X2	406154014	30	45	408	10 55 876 0	CRAWLER CARRIER RIGHT CP
HEX SCREW ISO 8765 M24X2	406154014	30	45	417	10 55 876 1	CRAWLER CARRIER LEFT CP
HEXALOBULAR HEAD SCREW	10138772	5	24	234	10 14 144 4	EXHAUST PIPE ASSEMBLY
HEXALOBULAR HEAD SCREW	10118912	4	10	246	10 11 892 9	FLYWHEEL ASSEMBLY
HEXALOBULAR HEAD SCREW	10125439	3	6	191	10 13 176 8	CYL HEAD ADD-ON
HEXALOBULAR HEAD SCREW	10127323	9	12	237	10 14 511 2	EXHAUST NOZZLE ATTACHM
HIGH PRESSURE PUMP W.FA	10150857	171	1	171	10 14 032 7	DIESEL ENGINE
HINGE	385204714	5	2	290	10 57 883 5	DOOR
HINGE	385204714	5	2	292	10 57 897 6	DOOR
HINGE	385204714	8	2	294	10 57 940 0	DOOR
HINGE	385204714	8	2	295	10 56 623 7	DOOR
HINGE	385204714	5	2	296	10 56 580 8	DOOR
HINGE	954560603	15	2	459	10 58 193 7	GRATING CPL
HINGED CONNECTOR DIN 110	433200208	46	2	633	10 51 176 9	NEEDLE BOOM CPL
HIP BELT	7371746	80	1	380	10 22 506 8	OPERATOR SEAT
HIP BELT	7371746	80	1	692	10 04 363 3	DRIVERS SEAT AIR-SUSPEN
HOIST LIMIT SWITCH EL	919587114	3	1	582	99 38 329 14	TIP BOOM CPL
HOIST LIMIT SWITCH EL	971495903	29	1	577	99 48 521 14	TIP BOOM CPL
HOIST LIMIT SWITCH INSTAL.	993080014	15	2	521	99 23 398 14	ROLLER SET
HOIST LIMITSWITCH LEFT IN	10557537	19	1	564	11 24 263 6	NEEDLE HEAD CPL
HOIST LIMITSWITCH RIGHT I	10557576	20	1	564	11 24 263 6	NEEDLE HEAD CPL
HOISTING STRAP CPL	11890636	16	1	650	11 23 619 7	SELF-LOADING SYSTEM RFK
HOLDER	10041876	17	1	226	10 14 286 0	AIR COND. COMPRESSOR A
HOLDER	10041876	21	1	248	10 15 028 8	CABLE HARNESS MOUNTING
HOLDER	10132619	17	1	248	10 15 028 8	CABLE HARNESS MOUNTING
HOLDER	10133758	14	1	248	10 15 028 8	CABLE HARNESS MOUNTING
HOLDER	10136834	16	1	248	10 15 028 8	CABLE HARNESS MOUNTING
HOLDER	10138079	3	1	214	10 14 679 7	FUEL FINE-FILTER ASSEMBLY
HOLDER	10145373	2	1	238	10 14 622 4	CYCLE VALVE
HOLDER	10146836	3	1	238	10 14 622 4	CYCLE VALVE
HOLDER	10223693	33	2	282	11 24 409 0	PANELLING SUPERSTR. INSTA
HOLDER	10224272	61	2	29	11 24 519 0	SUPERSTRUCTURE EL
HOLDER	10224272	49	3	351	11 27 973 6	CABIN EL
HOLDER	10527391	1	1	687	10 57 848 6	MONITOR CABIN ADD-ON
HOLDER	10556597	12	1	254	11 24 114 0	COOLER INSTALLATION WATE
HOLDER	10575980	30	3	302	11 24 483 7	MOUNTING PARTS SUPERST
HOLDER	10579104	10	1	165	10 51 948 1	SUCTION PIPE OIL
HOLDER	10584123	47	1	284	11 24 409 0	PANELLING SUPERSTR. INSTA
HOLDER	10584124	48	1	284	11 24 409 0	PANELLING SUPERSTR. INSTA
HOLDER	10591343	54	1	350	11 29 327 3	CABIN CPL

Description	Item	Pos.	Quantity	Sheet	Assembly	Description
HOLDER	11007215	15	1	248	10 15 028 8	CABLE HARNESS MOUNTING
HOLDER	11218236	70	1	450	11 23 820 3	PIVOT PIECE CPL
HOLDER	11242757	42	1	275	11 24 114 5	ASSEMBLY INSTAL.
HOLDER	11250382	3	1	254	11 24 114 0	COOLER INSTALLATION WATE
HOLDER	11251056	8	1	261	11 24 114 1	COOLER INSTALLATION CHA
HOLDER	11262894	3	1	383	11 26 095 6	STEERING CONSOLE RIGHT
HOLDER	11272006	7	1	604	11 29 444 5	HEATING RFK
HOLDER	592290214	81	1	367	10 35 250 8	CABIN
HOLDER	592290314	82	1	367	10 35 250 8	CABIN
HOLDER	592290414	84	1	367	10 35 250 8	CABIN
HOLDER	969641501	50	1	316	96 96 543 01	WINCH FRAME
HOLDER	992415314	10	1	628	99 24 978 14	BOOM ELECTRICS
HOLDER CAMERA	385137114	13	1	686	10 58 064 7	VIDEO MONITORING SYSTEM
HOLDER CPL	10584210	49	1	284	11 24 409 0	PANELLING SUPERSTR. INSTA
HOLDER CPL	11309625	57	1	350	11 29 327 3	CABIN CPL
HOLDER ST.CONST.	10579806	41	1	275	11 24 114 5	ASSEMBLY INSTAL.
HOLDER ST.CONST.	11223490	12	1	680	11 22 344 2	CAMERA INSTALLATION
HOLDER ST.CONST.	11247880	14	1	264	11 24 114 2	SUCTION UNIT AIR
HOLDING PLATE	11259704	200	1	378	59 22 930 14	AIR CONDITIONER
HOLDING PLATE	11259705	210	1	378	59 22 930 14	AIR CONDITIONER
HOLLOW SCREW	10151637	2	1	178	10 15 163 4	PISTON COOLING PRE-ASS.
HOLLOW SCREW 10X1 9SMN	9080466	3	5	231	10 14 821 7	PIPELINE INSTALLATION
HOLLOW SCREW DIN 7643 10X	4079240	17	1	217	10 14 588 5	LEAK OIL RETURN LINE
HOLLOW SCREW DIN 7643 12X	4980741	13	1	237	10 14 511 2	EXHAUST NOZZLE ATTACHM
HOLLOW SCREW DIN 7643 15	4981226	6	6	216	10 14 333 9	FUEL LINES
HOLLOW SCREW DIN 7643 15X	10129819	8	1	216	10 14 333 9	FUEL LINES
HOLLOW SCREW DIN 7643 8X	4980664	10	1	217	10 14 588 5	LEAK OIL RETURN LINE
HOLLOW SCREW DIN 7643 M1	4079160	5	7	217	10 14 588 5	LEAK OIL RETURN LINE
HOLLOW SCREW DIN 7643 M1	4079160	8	1	238	10 14 622 4	CYCLE VALVE
HOLLOW SCREW R1/2"	10588723	1	1	467	59 20 224 14	LOAD HOLDING VALVE
HOOK 2 RFK	919276314	598	1	3	01 38 281 14	LR 1300 SX
HOOTER	614046114	81	1	351	11 27 973 6	CABIN EL
HOSE	10352453	17	1	264	11 24 114 2	SUCTION UNIT AIR
HOSE	11267556	11	1	257	10 57 423 7	COOLER MOTOR
HOSE	11267557	12	1	257	10 57 423 7	COOLER MOTOR
HOSE	11267558	13	1	257	10 57 423 7	COOLER MOTOR
HOSE	11271411	23	1	604	11 29 444 5	HEATING RFK
HOSE	11621764	65	9	275	11 24 114 5	ASSEMBLY INSTAL.
HOSE	510511814	37	2	408	10 55 876 0	CRAWLER CARRIER RIGHT CP
HOSE	510511814	37	2	417	10 55 876 1	CRAWLER CARRIER LEFT CP
HOSE	510559314	43	2.5	254	11 24 114 0	COOLER INSTALLATION WATE
HOSE	553084214	22	1	604	11 29 444 5	HEATING RFK
HOSE	7362451	3	2.5	447	91 76 658 14	DRAIN HOSE CPL
HOSE	886002814	68	1.3	275	11 24 114 5	ASSEMBLY INSTAL.
HOSE CLAMP	10579070	50	6	167	10 57 532 2	INTAKE PIPE OIL CPL
HOSE CLAMP	10581765	58	1	254	11 24 114 0	COOLER INSTALLATION WATE
HOSE CLAMP	10581765	50	1	275	11 24 114 5	ASSEMBLY INSTAL.
HOSE CLAMP	11005281	10	7	238	10 14 622 4	CYCLE VALVE
HOSE CLAMP	11067863	54	4	275	11 24 114 5	ASSEMBLY INSTAL.
HOSE CLAMP	482000814	25	8	604	11 29 444 5	HEATING RFK
HOSE CLAMP	4900778	3	4	39	99 14 627 14	HOT-WATER HEATING SUPE
HOSE CLAMP	4900778	11	2	221	10 14 736 9	INTAKE STACK ASSEMBLY
HOSE CLAMP	4900778	25	2	236	10 14 013 6	EXHAUST TC MOUNTING
HOSE CLAMP	4900778	91	4	255	11 24 114 0	COOLER INSTALLATION WATE
HOSE CLAMP	4900778	2	1	447	91 76 658 14	DRAIN HOSE CPL
HOSE CLAMP	4901138	2	1	186	10 14 671 6	OIL LINE PRE-ASSEMBLY
HOSE CLAMP	4981029	8	3	186	10 14 671 6	OIL LINE PRE-ASSEMBLY
HOSE CLAMP	5004927	9	1	179	10 14 201 8	CRANKCASE BREATHER ASS
HOSE CLAMP	550838008	31	2	604	11 29 444 5	HEATING RFK
HOSE CLAMP	550849508	26	5	604	11 29 444 5	HEATING RFK

Description	Item	Pos.	Quantity	Sheet	Assembly	Description
HOSE CLAMP	553102308	29	6	604	11 29 444 5	HEATING RFK
HOSE CLAMP	5700024	8	5	179	10 14 201 8	CRANKCASE BREATHER ASS
HOSE CLAMP	774204914	55	6	254	11 24 114 0	COOLER INSTALLATION WATE
HOSE CLAMP	774204914	15	1	270	11 24 114 4	FUEL SYSTEM
HOSE CLAMP	774204914	51	14	275	11 24 114 5	ASSEMBLY INSTAL.
HOSE CLAMP	774206408	52	4	254	11 24 114 0	COOLER INSTALLATION WATE
HOSE CLAMP	774209908	31	2	264	11 24 114 2	SUCTION UNIT AIR
HOSE CLAMP	774214308	8	1	689	10 51 728 1	TUBING HYDR
HOSE CLAMP	774217108	34	1	264	11 24 114 2	SUCTION UNIT AIR
HOSE CLAMP	774218808	53	9	254	11 24 114 0	COOLER INSTALLATION WATE
HOSE CLAMP	774241914	32	1	264	11 24 114 2	SUCTION UNIT AIR
HOSE CLAMP	774247214	33	2	264	11 24 114 2	SUCTION UNIT AIR
HOSE CLAMP	774256114	52	2	167	10 57 532 2	INTAKE PIPE OIL CPL
HOSE CLAMP	790208814	51	6	167	10 57 532 2	INTAKE PIPE OIL CPL
HOSE CLAMP	790244814	53	1	275	11 24 114 5	ASSEMBLY INSTAL.
HOSE CLAMP THREADED UN	693152314	83	2	566	10 57 624 5	CABLE LOOM
HOSE CPL	11222864	200	1	713	51 00 959 14	REFUEL PUMP
HOSE CPL	553079914	13	1	350	11 29 327 3	CABIN CPL
HOSE CPL	592007514	14	1	350	11 29 327 3	CABIN CPL
HOSE CPL	911108414	605	1	437	11 26 260 9	HOSE LIST
HOSE CPL	911247914	112	1	405	11 23 548 0	HOSE LIST
HOSE CPL	911247914	116	1	405	11 23 548 0	HOSE LIST
HOSE CPL	911256414	596	1	38	11 26 995 4	HOSE LIST
HOSE CPL	911292114	138	1	405	11 23 548 0	HOSE LIST
HOSE CPL	914757914	404	1	161	11 24 113 7	HOSE LIST
HOSE CPL	914762914	592	1	38	11 26 995 4	HOSE LIST
HOSE CPL	914763014	655	1	323	10 55 208 5	HOSE LIST
HOSE CPL	914792514	5022	1	38	11 26 995 4	HOSE LIST
HOSE CPL	914794514	575	1	37	11 26 995 4	HOSE LIST
HOSE CPL	914798914	551	1	37	11 26 995 4	HOSE LIST
HOSE CPL	918245214	572	1	37	11 26 995 4	HOSE LIST
HOSE CPL	918248414	280	1	647	11 22 970 9	HOSE LIST
HOSE CPL	918269214	430	1	161	11 24 113 7	HOSE LIST
HOSE CPL	918272514	127	1	405	11 23 548 0	HOSE LIST
HOSE CPL	918285814	598	1	38	11 26 995 4	HOSE LIST
HOSE CPL	918803414	130	1	405	11 23 548 0	HOSE LIST
HOSE CPL	918803414	135	1	405	11 23 548 0	HOSE LIST
HOSE CPL	918803414	142	1	405	11 23 548 0	HOSE LIST
HOSE CPL	918803414	145	1	406	11 23 548 0	HOSE LIST
HOSE CPL	918805114	707	1	69	10 54 545 1	HOSE LIST
HOSE CPL	918810914	595	1	38	11 26 995 4	HOSE LIST
HOSE CPL	918819414	380	1	348	10 56 178 0	HOSE LIST
HOSE CPL	918820914	162	1	406	11 23 548 0	HOSE LIST
HOSE CPL	918849914	827	1	610	10 52 439 2	HOSE LIST
HOSE CPL	918870314	903	1	469	11 22 970 6	HOSE LIST
HOSE CPL	918870914	826	1	314	99 33 241 14	HOSE LIST
HOSE CPL	918873814	556	1	37	11 26 995 4	HOSE LIST
HOSE CPL	918874514	432	1	161	11 24 113 7	HOSE LIST
HOSE CPL	918882614	824	1	314	99 33 241 14	HOSE LIST
HOSE CPL	919126414	364	1	658	99 27 747 14	HOSE LIST
HOSE CPL	919126414	365	1	658	99 27 747 14	HOSE LIST
HOSE CPL	919127514	708	1	69	10 54 545 1	HOSE LIST
HOSE CPL	919140514	533	1	37	11 26 995 4	HOSE LIST
HOSE CPL	919143414	421	1	161	11 24 113 7	HOSE LIST
HOSE CPL	919144714	181	1	663	11 24 779 0	HOSE LIST
HOSE CPL	919145114	805	1	716	11 28 825 7	HOSE LIST
HOSE CPL	919158314	113	1	405	11 23 548 0	HOSE LIST
HOSE CPL	919158314	117	1	405	11 23 548 0	HOSE LIST
HOSE CPL	919167714	422	1	161	11 24 113 7	HOSE LIST
HOSE CPL	919706714	527	1	36	11 26 995 4	HOSE LIST

Description	Item	Pos.	Quantity	Sheet	Assembly	Description
HOSE CPL	919714914	581	1	38	11 26 995 4	HOSE LIST
HOSE CPL	919735014	524	1	36	11 26 995 4	HOSE LIST
HOSE CPL	919736714	185	1	663	11 24 779 0	HOSE LIST
HOSE CPL	919736714	186	1	663	11 24 779 0	HOSE LIST
HOSE CPL	919757114	635	1	442	11 26 261 2	HOSE LIST
HOSE CPL	919778814	902	1	469	11 22 970 6	HOSE LIST
HOSE CPL	919791614	706	1	69	10 54 545 1	HOSE LIST
HOSE CPL	928003714	163	1	406	11 23 548 0	HOSE LIST
HOSE CPL	928009314	428	1	161	11 24 113 7	HOSE LIST
HOSE CPL	928010214	511	1	36	11 26 995 4	HOSE LIST
HOSE CPL	928010214	512	1	36	11 26 995 4	HOSE LIST
HOSE CPL	928010214	513	1	36	11 26 995 4	HOSE LIST
HOSE CPL	928010214	514	1	36	11 26 995 4	HOSE LIST
HOSE CPL	928014714	904	1	469	11 22 970 6	HOSE LIST
HOSE CPL	928020314	546	1	37	11 26 995 4	HOSE LIST
HOSE CPL	928029714	906	1	469	11 22 970 6	HOSE LIST
HOSE CPL	928029714	914	1	469	11 22 970 6	HOSE LIST
HOSE CPL	928032214	547	1	37	11 26 995 4	HOSE LIST
HOSE CPL	928044014	390	1	348	10 56 178 0	HOSE LIST
HOSE CPL	928110014	584	1	38	11 26 995 4	HOSE LIST
HOSE CPL	928113314	381	1	348	10 56 178 0	HOSE LIST
HOSE CPL	928121514	917	1	469	11 22 970 6	HOSE LIST
HOSE CPL	928123014	580	1	38	11 26 995 4	HOSE LIST
HOSE CPL	928127314	131	1	405	11 23 548 0	HOSE LIST
HOSE CPL	928127314	136	1	405	11 23 548 0	HOSE LIST
HOSE CPL	928127314	143	1	406	11 23 548 0	HOSE LIST
HOSE CPL	928127314	144	1	406	11 23 548 0	HOSE LIST
HOSE CPL	928130914	800	1	271	11 24 972 9	HOSE LIST
HOSE CPL	928130914	801	1	271	11 24 972 9	HOSE LIST
HOSE CPL	928135714	822	1	40	11 23 110 9	HOSE LIST
HOSE CPL	928137514	122	1	405	11 23 548 0	HOSE LIST
HOSE CPL	928137714	702	1	69	10 54 545 1	HOSE LIST
HOSE CPL	928152414	118	1	405	11 23 548 0	HOSE LIST
HOSE CPL	928166714	909	1	469	11 22 970 6	HOSE LIST
HOSE CPL	928166714	913	1	469	11 22 970 6	HOSE LIST
HOSE CPL	928169614	151	1	406	11 23 548 0	HOSE LIST
HOSE CPL	928169614	159	1	406	11 23 548 0	HOSE LIST
HOSE CPL	928183014	506	1	36	11 26 995 4	HOSE LIST
HOSE CPL	928204714	278	1	647	11 22 970 9	HOSE LIST
HOSE CPL	928209814	102	1	405	11 23 548 0	HOSE LIST
HOSE CPL	928209814	107	1	405	11 23 548 0	HOSE LIST
HOSE CPL	928266514	403	1	161	11 24 113 7	HOSE LIST
HOSE CPL	928272714	411	1	161	11 24 113 7	HOSE LIST
HOSE CPL	928293114	133	1	405	11 23 548 0	HOSE LIST
HOSE CPL	928293114	134	1	405	11 23 548 0	HOSE LIST
HOSE CPL	928318214	802	1	458	11 23 239 9	HOSE LIST
HOSE CPL	928318214	807	1	458	11 23 239 9	HOSE LIST
HOSE CPL	928326514	825	1	314	99 33 241 14	HOSE LIST
HOSE CPL	928348514	201	1	549	10 53 147 2	HOSE LIST
HOSE CPL	928357214	585	1	38	11 26 995 4	HOSE LIST
HOSE CPL	928443714	522	1	36	11 26 995 4	HOSE LIST
HOSE CPL	928445414	536	1	37	11 26 995 4	HOSE LIST
HOSE CPL	928456714	526	1	36	11 26 995 4	HOSE LIST
HOSE CPL	928461114	525	1	36	11 26 995 4	HOSE LIST
HOSE CPL	928536514	606	1	437	11 26 260 9	HOSE LIST
HOSE CPL	928538414	704	1	69	10 54 545 1	HOSE LIST
HOSE CPL	928538414	139	1	405	11 23 548 0	HOSE LIST
HOSE CPL	928589814	431	1	161	11 24 113 7	HOSE LIST
HOSE CPL	928591114	703	1	69	10 54 545 1	HOSE LIST
HOSE CPL	928611014	435	1	162	11 24 113 7	HOSE LIST

Description	Item	Pos.	Quantity	Sheet	Assembly	Description
HOSE CPL	928619114	360	1	658	99 27 747 14	HOSE LIST
HOSE CPL	928712614	597	1	38	11 26 995 4	HOSE LIST
HOSE CPL	928763814	908	1	469	11 22 970 6	HOSE LIST
HOSE CPL	928763814	912	1	469	11 22 970 6	HOSE LIST
HOSE CPL	928764814	548	1	37	11 26 995 4	HOSE LIST
HOSE CPL	928765014	508	1	36	11 26 995 4	HOSE LIST
HOSE CPL	928815314	295	1	445	91 90 239 14	CABLE HYDR
HOSE CPL	928857314	407	1	161	11 24 113 7	HOSE LIST
HOSE CPL	928861314	823	1	314	99 33 241 14	HOSE LIST
HOSE CPL	928861414	824	1	40	11 23 110 9	HOSE LIST
HOSE CPL	928865914	154	1	406	11 23 548 0	HOSE LIST
HOSE CPL	928865914	158	1	406	11 23 548 0	HOSE LIST
HOSE CPL	928868414	418	1	161	11 24 113 7	HOSE LIST
HOSE CPL	928872514	103	1	405	11 23 548 0	HOSE LIST
HOSE CPL	928872814	108	1	405	11 23 548 0	HOSE LIST
HOSE CPL	928880614	427	1	161	11 24 113 7	HOSE LIST
HOSE CPL	928885614	559	1	37	11 26 995 4	HOSE LIST
HOSE CPL	928950414	656	1	323	10 55 208 5	HOSE LIST
HOSE CPL	928952714	420	1	161	11 24 113 7	HOSE LIST
HOSE CPL	928973314	150	1	406	11 23 548 0	HOSE LIST
HOSE CPL	928973314	156	1	406	11 23 548 0	HOSE LIST
HOSE CPL	929376814	705	1	69	10 54 545 1	HOSE LIST
HOSE CPL	929381114	415	1	161	11 24 113 7	HOSE LIST
HOSE CPL	929390914	132	1	405	11 23 548 0	HOSE LIST
HOSE CPL	929390914	137	1	405	11 23 548 0	HOSE LIST
HOSE CPL	929399714	166	1	406	11 23 548 0	HOSE LIST
HOSE CPL	929414814	555	1	37	11 26 995 4	HOSE LIST
HOSE CPL	929443814	828	1	610	10 52 439 2	HOSE LIST
HOSE CPL	929459114	823	1	40	11 23 110 9	HOSE LIST
HOSE CPL	929467714	153	1	406	11 23 548 0	HOSE LIST
HOSE CPL	929467714	157	1	406	11 23 548 0	HOSE LIST
HOSE CPL	929473314	582	1	38	11 26 995 4	HOSE LIST
HOSE CPL	929491914	825	1	40	11 23 110 9	HOSE LIST
HOSE CPL	990038114	583	1	38	11 26 995 4	HOSE LIST
HOSE CPL	990053014	408	1	161	11 24 113 7	HOSE LIST
HOSE CPL	990055814	361	1	658	99 27 747 14	HOSE LIST
HOSE CPL	990055914	362	1	658	99 27 747 14	HOSE LIST
HOSE CPL	991109014	282	1	647	11 22 970 9	HOSE LIST
HOSE CPL	991109014	283	1	647	11 22 970 9	HOSE LIST
HOSE CPL	991139814	401	1	161	11 24 113 7	HOSE LIST
HOSE CPL	991168714	509	1	36	11 26 995 4	HOSE LIST
HOSE CPL	991170814	652	1	323	10 55 208 5	HOSE LIST
HOSE CPL	991195514	367	1	610	10 52 439 2	HOSE LIST
HOSE CPL	991198814	810	1	458	11 23 239 9	HOSE LIST
HOSE CPL	991198814	811	1	458	11 23 239 9	HOSE LIST
HOSE CPL	991205314	364	1	610	10 52 439 2	HOSE LIST
HOSE CPL	991209514	5020	1	38	11 26 995 4	HOSE LIST
HOSE CPL	991242714	915	1	469	11 22 970 6	HOSE LIST
HOSE CPL	991253814	579	1	38	11 26 995 4	HOSE LIST
HOSE CPL	991285814	918	1	469	11 22 970 6	HOSE LIST
HOSE CPL	991312114	152	1	406	11 23 548 0	HOSE LIST
HOSE CPL	991312114	155	1	406	11 23 548 0	HOSE LIST
HOSE CPL	991362714	826	1	40	11 23 110 9	HOSE LIST
HOSE CPL	991375814	587	1	38	11 26 995 4	HOSE LIST
HOSE CPL	991384314	388	1	348	10 56 178 0	HOSE LIST
HOSE CPL	991390514	570	1	37	11 26 995 4	HOSE LIST
HOSE CPL	991391814	602	1	437	11 26 260 9	HOSE LIST
HOSE CPL	991528514	586	1	38	11 26 995 4	HOSE LIST
HOSE CPL	991547014	419	1	161	11 24 113 7	HOSE LIST
HOSE CPL	991563114	812	1	458	11 23 239 9	HOSE LIST

Description	Item	Pos.	Quantity	Sheet	Assembly	Description
HOSE CPL	991563114	817	1	458	11 23 239 9	HOSE LIST
HOSE CPL	991587514	552	1	37	11 26 995 4	HOSE LIST
HOSE CPL	991964414	406	1	161	11 24 113 7	HOSE LIST
HOSE CPL	992258514	569	1	37	11 26 995 4	HOSE LIST
HOSE CPL	992261314	577	1	37	11 26 995 4	HOSE LIST
HOSE CPL	992261414	520	1	36	11 26 995 4	HOSE LIST
HOSE CPL	992273614	180	1	663	11 24 779 0	HOSE LIST
HOSE CPL	992296514	279	1	647	11 22 970 9	HOSE LIST
HOSE CPL	992298714	591	1	38	11 26 995 4	HOSE LIST
HOSE CPL	992504214	813	1	458	11 23 239 9	HOSE LIST
HOSE CPL	992511514	604	1	437	11 26 260 9	HOSE LIST
HOSE CPL	992519014	594	1	38	11 26 995 4	HOSE LIST
HOSE CPL	992552014	389	1	348	10 56 178 0	HOSE LIST
HOSE CPL	992561114	203	1	549	10 53 147 2	HOSE LIST
HOSE CPL	992569114	557	1	37	11 26 995 4	HOSE LIST
HOSE CPL	992835314	400	1	161	11 24 113 7	HOSE LIST
HOSE CPL	992837314	367	1	658	99 27 747 14	HOSE LIST
HOSE CPL	992857714	366	1	658	99 27 747 14	HOSE LIST
HOSE CPL	992879314	634	1	442	11 26 261 2	HOSE LIST
HOSE CPL	992893114	803	1	458	11 23 239 9	HOSE LIST
HOSE CPL	993204614	104	1	405	11 23 548 0	HOSE LIST
HOSE CPL	993204614	109	1	405	11 23 548 0	HOSE LIST
HOSE CPL	993213714	653	1	323	10 55 208 5	HOSE LIST
HOSE CPL	993226114	800	1	458	11 23 239 9	HOSE LIST
HOSE CPL	993226114	801	1	458	11 23 239 9	HOSE LIST
HOSE CPL	993227714	650	1	675	10 53 635 2	HOSE LIST
HOSE CPL	993249414	200	1	549	10 53 147 2	HOSE LIST
HOSE CPL	993249514	202	1	549	10 53 147 2	HOSE LIST
HOSE CPL	993623814	822	1	314	99 33 241 14	HOSE LIST
HOSE CPL	993643514	409	1	161	11 24 113 7	HOSE LIST
HOSE CPL	993657714	516	1	36	11 26 995 4	HOSE LIST
HOSE CPL	993685614	633	1	442	11 26 261 2	HOSE LIST
HOSE CPL	993734014	535	1	37	11 26 995 4	HOSE LIST
HOSE CPL	993751514	654	1	323	10 55 208 5	HOSE LIST
HOSE CPL	993758914	182	1	663	11 24 779 0	HOSE LIST
HOSE CPL	993758914	183	1	663	11 24 779 0	HOSE LIST
HOSE CPL	993758914	188	1	663	11 24 779 0	HOSE LIST
HOSE CPL	993758914	189	1	663	11 24 779 0	HOSE LIST
HOSE CPL	993759614	651	1	675	10 53 635 2	HOSE LIST
HOSE CPL	993774614	537	1	37	11 26 995 4	HOSE LIST
HOSE CPL	993775014	5021	1	38	11 26 995 4	HOSE LIST
HOSE CPL	994460114	545	1	37	11 26 995 4	HOSE LIST
HOSE CPL	994465914	519	1	36	11 26 995 4	HOSE LIST
HOSE CPL	994486214	900	1	469	11 22 970 6	HOSE LIST
HOSE CPL	994486214	901	1	469	11 22 970 6	HOSE LIST
HOSE CPL	994486214	910	1	469	11 22 970 6	HOSE LIST
HOSE CPL	994905314	636	1	442	11 26 261 2	HOSE LIST
HOSE CPL	995006114	578	1	38	11 26 995 4	HOSE LIST
HOSE CPL	995027514	532	1	37	11 26 995 4	HOSE LIST
HOSE CPL	995060114	521	1	36	11 26 995 4	HOSE LIST
HOSE CPL	995082614	382	1	348	10 56 178 0	HOSE LIST
HOSE CPL	995174014	905	1	469	11 22 970 6	HOSE LIST
HOSE CPL	995175314	281	1	647	11 22 970 9	HOSE LIST
HOSE CPL	995176314	538	1	37	11 26 995 4	HOSE LIST
HOSE CPL	995180714	416	1	161	11 24 113 7	HOSE LIST
HOSE CPL	995207914	540	1	37	11 26 995 4	HOSE LIST
HOSE CPL	995219914	140	1	405	11 23 548 0	HOSE LIST
HOSE CPL	995226814	184	1	663	11 24 779 0	HOSE LIST
HOSE CPL	995226814	187	1	663	11 24 779 0	HOSE LIST
HOSE CPL	995240114	167	1	406	11 23 548 0	HOSE LIST

Description	Item	Pos.	Quantity	Sheet	Assembly	Description
HOSE CPL	995263914	425	1	161	11 24 113 7	HOSE LIST
HOSE CPL	995264214	566	1	37	11 26 995 4	HOSE LIST
HOSE CPL	995285414	361	1	610	10 52 439 2	HOSE LIST
HOSE CPL	995421014	402	1	161	11 24 113 7	HOSE LIST
HOSE CPL	995437214	119	1	405	11 23 548 0	HOSE LIST
HOSE CPL	995440614	576	1	37	11 26 995 4	HOSE LIST
HOSE CPL	995550714	429	1	161	11 24 113 7	HOSE LIST
HOSE CPL	995830614	804	1	711	10 57 089 4	HOSE LIST
HOSE CPL	995865114	907	1	469	11 22 970 6	HOSE LIST
HOSE CPL	995865114	911	1	469	11 22 970 6	HOSE LIST
HOSE CPL	995943114	600	1	437	11 26 260 9	HOSE LIST
HOSE CPL	995943514	619	1	437	11 26 260 9	HOSE LIST
HOSE CPL	995943614	620	1	437	11 26 260 9	HOSE LIST
HOSE CPL	995943714	628	1	442	11 26 261 2	HOSE LIST
HOSE CPL	995943814	629	1	442	11 26 261 2	HOSE LIST
HOSE CPL	995944014	631	1	442	11 26 261 2	HOSE LIST
HOSE CPL	995944114	632	1	442	11 26 261 2	HOSE LIST
HOSE CPL	995944214	384	1	348	10 56 178 0	HOSE LIST
HOSE CPL	995944314	387	1	348	10 56 178 0	HOSE LIST
HOSE CPL	995944414	391	1	348	10 56 178 0	HOSE LIST
HOSE CPL	995951214	392	1	348	10 56 178 0	HOSE LIST
HOSE CPL	995951314	650	1	323	10 55 208 5	HOSE LIST
HOSE CPL	995951414	651	1	323	10 55 208 5	HOSE LIST
HOSE CPL	995959114	916	1	469	11 22 970 6	HOSE LIST
HOSE CPL	995961914	424	1	161	11 24 113 7	HOSE LIST
HOSE CPL	995962014	426	1	161	11 24 113 7	HOSE LIST
HOSE CPL	995972114	500	1	36	11 26 995 4	HOSE LIST
HOSE CPL	995972214	501	1	36	11 26 995 4	HOSE LIST
HOSE CPL	995972314	502	1	36	11 26 995 4	HOSE LIST
HOSE CPL	995972414	503	1	36	11 26 995 4	HOSE LIST
HOSE CPL	995972514	504	1	36	11 26 995 4	HOSE LIST
HOSE CPL	995972614	505	1	36	11 26 995 4	HOSE LIST
HOSE CPL	995972814	510	1	36	11 26 995 4	HOSE LIST
HOSE CPL	995972914	515	1	36	11 26 995 4	HOSE LIST
HOSE CPL	995973014	518	1	36	11 26 995 4	HOSE LIST
HOSE CPL	995973214	523	1	36	11 26 995 4	HOSE LIST
HOSE CPL	995991314	630	1	442	11 26 261 2	HOSE LIST
HOSE CPL	996467014	567	1	37	11 26 995 4	HOSE LIST
HOSE CPL	996467114	590	1	38	11 26 995 4	HOSE LIST
HOSE CPL	996625314	820	1	314	99 33 241 14	HOSE LIST
HOSE CPL	996625414	821	1	314	99 33 241 14	HOSE LIST
HOSE CPL	996770614	822	1	278	11 26 949 8	HOSE LIST
HOSE CPL	996770614	825	1	278	11 26 949 8	HOSE LIST
HOSE CPL	996770714	823	1	278	11 26 949 8	HOSE LIST
HOSE CPL	996770814	824	1	278	11 26 949 8	HOSE LIST
HOSE CPL	996771014	826	1	278	11 26 949 8	HOSE LIST
HOSE CPL	996771114	827	1	278	11 26 949 8	HOSE LIST
HOSE CPL	996778614	541	1	37	11 26 995 4	HOSE LIST
HOSE CPL	996779714	803	1	271	11 24 972 9	HOSE LIST
HOSE FITTING	7402657	1	1	447	91 76 658 14	DRAIN HOSE CPL
HOSE HOLDER HYDR.ST.CON	916183314	78	1	451	11 23 820 3	PIVOT PIECE CPL
HOSE HOLDER ST.CONST. CP	949401114	16	1	302	11 24 483 7	MOUNTING PARTS SUPERST
HOSE LINE	10144282	66	1	275	11 24 114 5	ASSEMBLY INSTAL.
HOSE LINE	10144297	67	1	275	11 24 114 5	ASSEMBLY INSTAL.
HOSE LINE	790042214	5	1	444	10 56 183 8	TOOL
HOSE LINE	790042914	6	1	444	10 56 183 8	TOOL
HOSE LIST	10524392	4	1	606	10 51 743 9	ROPE LUG CPL RFK
HOSE LIST	10527642	20	1	699	11 23 189 1	AIR CONDITIONING UNIT RFK
HOSE LIST	10531472	4	1	544	10 53 145 5	TILTING-BACK SUPPORT NEE
HOSE LIST	10536352	4	1	672	10 53 635 0	SYNCHRONIZING HYDR RFK

Description	Item	Pos.	Quantity	Sheet	Assembly	Description
HOSE LIST	10545451	4	1	64	10 51 969 4	A-FRAME ERECTION CYL INST
HOSE LIST	10552085	4	1	320	10 51 968 6	LUG SUPERSTRUCTURE CPL
HOSE LIST	10561780	4	1	341	10 51 968 2	SG SUPERSTRUCTURE
HOSE LIST	10570894	4	1	710	10 52 155 4	REFUELLING SYSTEM RFK
HOSE LIST	11229706	4	1	462	11 29 259 8	TILT-BACK SUPPORT
HOSE LIST	11229709	4	1	644	10 51 971 3	SELF-LOADING SYSTEM RFK
HOSE LIST	11231109	4	1	39	99 14 627 14	HOT-WATER HEATING SUPE
HOSE LIST	11232399	4	1	448	11 23 820 3	PIVOT PIECE CPL
HOSE LIST	11235480	4	1	389	11 23 547 8	UC CPL
HOSE LIST	11241137	4	1	73	11 24 048 0	CENTRAL POWER UNIT
HOSE LIST	11247790	4	1	660	11 89 568 5	SELF-LOADING SYSTEM RFK
HOSE LIST	11249729	4	1	270	11 24 114 4	FUEL SYSTEM
HOSE LIST	11262609	4	1	423	11 26 260 5	WINCH 1 CRANE
HOSE LIST	11262612	4	1	438	11 26 261 0	WINCH 2 CRANE
HOSE LIST	11269498	126	1	276	11 24 114 5	ASSEMBLY INSTAL.
HOSE LIST	11269954	4	1	6	11 24 047 9	SUPERSTRUCTURE CPL
HOSE LIST	11288257	103	1	710	10 52 155 4	REFUELLING SYSTEM RFK
HOSE LIST	11310079	108	1	710	10 52 155 4	REFUELLING SYSTEM RFK
HOSE LIST	992774714	4	1	650	11 23 619 7	SELF-LOADING SYSTEM RFK
HOSE LIST	993324114	4	1	311	10 51 969 7	NEEDLE LUFFING WINCH
HOSE NIPPLE	10121893	10	1	221	10 14 736 9	INTAKE STACK ASSEMBLY
HOSE NIPPLE	10140969	5	1	233	10 14 274 4	COOLING WATER AIR BLEED
HOSE NIPPLE	10142668	1	1	233	10 14 274 4	COOLING WATER AIR BLEED
HOSE NIPPLE	9140351	26	1	236	10 14 013 6	EXHAUST TC MOUNTING
HOSE SET CPL	10527912	1	1	703	10 52 764 2	HOSE LIST
HOSE SET CPL	10527916	2	1	703	10 52 764 2	HOSE LIST
HOSE SET CPL	10527918	3	1	703	10 52 764 2	HOSE LIST
HOSE UNION	11271905	46	1	604	11 29 444 5	HEATING RFK
HOSE UNION	511713914	40	1	254	11 24 114 0	COOLER INSTALLATION WATE
HOSE UNION	511713914	36	4	275	11 24 114 5	ASSEMBLY INSTAL.
HOT-WATER HEATING SUPE	991462714	13	1	6	11 24 047 9	SUPERSTRUCTURE CPL
HOUSING	10447743	1	1	401	10 44 510 1	QUICK RELEASE FITTING
HOUSING	10447744	1	1	400	10 44 510 2	QUICK RELEASE FITTING
HOUSING	10447745	1	1	25	10 44 510 5	QUICK RELEASE FITTING
HOUSING	11239912	1	1	655	51 16 404 14	LOWERING BRAKE VALVE
HOUSING	11290844	10	1	78	11 24 682 0	DISTRIBUTOR GEARBOX
HOUSING	611039214	21	1	714	10 52 155 9	MODULE REFUELLING SYSTE
HOUSING	7027989	40	1	693	70 28 516	SEAT FRAME
HOUSING DRILLED	918975514	21	1	34	10 56 645 8	TERMINAL BOX
HUB	10120188	7	1	204	10 13 382 3	SUCTION PUMP PRE-ASS.
HUB	11293193	6	1	400	10 44 510 2	QUICK RELEASE FITTING
HYDR POWER UNIT	11247735	2	1	73	11 24 048 0	CENTRAL POWER UNIT
HYDRAULIC OIL	10520522	10	26	547	10 53 146 1	TUBING HYDR
HYDRAULIC PARTS DRIVING G	11219924	3	1	80	11 21 990 2	DRIVING GEAR
HYDRAULIC-TYPE LUBRICAT.N	7001228	18	2	64	10 51 969 4	A-FRAME ERECTION CYL INST
HYDRAULIC-TYPE LUBRICAT.N	774301614	44	2	633	10 51 176 9	NEEDLE BOOM CPL
HYDRAULIC-TYPE LUBRICAT.N	7743240	65	1	612	59 20 694 14	WINCH
HYDRAULIC-TYPE LUBRICAT.N	7743242	5	2	63	99 23 451 14	PIVOT BOLT INSTALLATION
HYDRAULIC-TYPE LUBRICAT.N	7743242	16	2	473	11 24 444 4	A-FRAME 1 CPL
HYDRAULIC-TYPE LUBRICAT.N	7743242	12	1	527	11 29 648 5	PIN CPL
HYDRAULIC-TYPE LUBRICAT.N	7743242	12	2	529	11 29 649 2	PIN CPL
HYDRAULIC-TYPE LUBRICAT.N	7743242	19	1	582	99 38 329 14	TIP BOOM CPL
HYDRAULIC-TYPE LUBRICAT.N	7743242	16	4	665	11 89 568 6	SELF-LOADING SYSTEM RFK
IGNITION STARTER SWITCH	740732003	31	1	362	11 26 095 7	CONTROL STAND RIGHT
ILLUMINATED BUTTON	606667214	37	1	629	11 21 530 2	CABIN REM. EL
ILLUMINATED BUTTON	606667814	12	1	359	10 53 171 8	KEYBOARD
ILLUMINATED BUTTON	606672114	10	2	359	10 53 171 8	KEYBOARD
ILLUMINATED BUTTON	606674714	11	4	359	10 53 171 8	KEYBOARD
ILLUMINATED PUSHBUTTON	693003614	31	1	714	10 52 155 9	MODULE REFUELLING SYSTE
INJECTION LINE	10143827	2	4	218	10 14 382 8	INJECTION LINES

Description	Item	Pos.	Quantity	Sheet	Assembly	Description
INJECTION LINE	10143829	1	1	218	10 14 382 8	INJECTION LINES
INJECTION LINE	10143831	4	1	218	10 14 382 8	INJECTION LINES
INJECTION LINES	10143828	215	1	172	10 14 032 7	DIESEL ENGINE
INJECTOR CPL.	10144093	13	1	275	11 24 114 5	ASSEMBLY INSTAL.
INJECTOR FASTENING	10135432	192	6	171	10 14 032 7	DIESEL ENGINE
INJECTOR WITH FASTENING	10152867	190	6	171	10 14 032 7	DIESEL ENGINE
INLET VALVE	10136752	2	2	192	10 13 728 6	CYLINDER HEAD PRE-ASS.
INLET VALVE SEAT INSERT	9073725	6	2	193	10 13 728 5	CYLINDER HEAD
INNER WHEEL	512406114	11	1	613	54 02 701 14	PLANETARY STAGE
INNER WHEEL	512406214	21	1	613	54 02 701 14	PLANETARY STAGE
INNER WHEEL	944378903	60	1	412	96 93 178 01	TRACTION DRIVE
INNER WHEEL	944403803	10	1	412	96 93 178 01	TRACTION DRIVE
INNER WHEEL	944406703	65	1	412	96 93 178 01	TRACTION DRIVE
INPUT MODULE	10144034	1	1	269	10 14 404 9	SCR CPL.
INSCRIPTION	10351188	8	2	2	01 38 281 14	LR 1300 SX
INSULATING ELEMENT	10227563	79	2	354	10 55 963 5	SWITCH CABINET X1
INSULATING HOSE	603000108	201	1.03	697	10 56 427 9	WIRING HARNESS
INSULATING HOSE	603000308	86	1.2	566	10 57 624 5	CABLE LOOM
INSULATING HOSE	603000408	17	2.3	288	11 24 409 1	COVERS
INSULATING JACKET	11272566	11	1	604	11 29 444 5	HEATING RFK
INTAKE PIPE	953466003	10	1	168	10 58 017 0	RETURN PIPE
INTAKE PIPE CPL	10350932	9	1	167	10 57 532 2	INTAKE PIPE OIL CPL
INTAKE PIPE CPL	10579155	11	2	167	10 57 532 2	INTAKE PIPE OIL CPL
INTAKE PIPE CPL	10598537	8	1	167	10 57 532 2	INTAKE PIPE OIL CPL
INTAKE PIPE CPL	592070414	7	1	167	10 57 532 2	INTAKE PIPE OIL CPL
INTAKE PIPE CPL	592330814	14	1	167	10 57 532 2	INTAKE PIPE OIL CPL
INTAKE PIPE CPL	916526414	13	1	167	10 57 532 2	INTAKE PIPE OIL CPL
INTAKE PIPE OIL CPL	10575322	3	1	165	10 51 948 1	SUCTION PIPE OIL
INTAKE STACK	10141453	1	1	221	10 14 736 9	INTAKE STACK ASSEMBLY
INTAKE STACK ASSEMBLY	10147369	221	1	172	10 14 032 7	DIESEL ENGINE
INTERMEDIATE FLANGE SAE	510710614	10	4	392	11 25 903 1	TUBING HYDR
INTERMEDIATE GEAR PRE-A	9072633	14	1	204	10 13 382 3	SUCTION PUMP PRE-ASS.
INTERMEDIATE GEAR PRE-A	9072904	1	1	225	90 72 906	INTERMEDIATE WHEEL CPL
INTERMEDIATE PART	10132935	16	1	217	10 14 588 5	LEAK OIL RETURN LINE
INTERMEDIATE PART	956009714	10	1	302	11 24 483 7	MOUNTING PARTS SUPERST
INTERMEDIATE PART	956009714	35	2	450	11 23 820 3	PIVOT PIECE CPL
INTERMEDIATE PART	956009714	11	2	484	11 28 725 5	ROPE GUARD CPL
INTERMEDIATE PIECE ASSE	11240849	98	1	3	01 38 281 14	LR 1300 SX
INTERMEDIATE PIECE ASSE	11241627	100	1	3	01 38 281 14	LR 1300 SX
INTERMEDIATE PIECE ASSE	11241631	104	4	3	01 38 281 14	LR 1300 SX
INTERMEDIATE PIECE ASSE	11245705	67	1	2	01 38 281 14	LR 1300 SX
INTERMEDIATE PIECE ASSE	11245711	71	1	2	01 38 281 14	LR 1300 SX
INTERMEDIATE PIECE ASSE	11245717	79	4	2	01 38 281 14	LR 1300 SX
INTERMEDIATE PLATE	511495814	20	1	8	11 29 618 6	SUPERSTRUCTURE HYDR
INTERMEDIATE SHAFT	944405903	70	1	412	96 93 178 01	TRACTION DRIVE
INTERMEDIATE TENSIONING	970599703	619	1	3	01 38 281 14	LR 1300 SX
INTERMEDIATE TENSIONING	992340514	616	1	3	01 38 281 14	LR 1300 SX
INTERMEDIATE TENSIONING	992342014	617	1	3	01 38 281 14	LR 1300 SX
INTERMEDIATE WHEEL AXLE	9072907	2	1	225	90 72 906	INTERMEDIATE WHEEL CPL
INTERMEDIATE WHEEL CPL	9072906	331	1	172	10 14 032 7	DIESEL ENGINE
INTERNAL LIGHT	607147008	41	1	351	11 27 973 6	CABIN EL
INTERNAL LIGHT	607147008	41	1	354	10 55 963 5	SWITCH CABINET X1
INTERNAL MULTI-DISC	501540514	98	7	339	99 04 645 14	DRIVE
JACK-UP SYSTEM HYDR RFK	11235246	2	1	666	11 89 568 7	SELF-LOADING SYSTEM RFK
JACK-UP SYSTEM HYDR RFK	11894080	2	1	660	11 89 568 5	SELF-LOADING SYSTEM RFK
JAW	10142030	2	1	207	10 15 286 7	INJECTOR WITH FASTENING
JAW	10142030	1	1	212	10 13 543 2	INJECTOR FASTENING
JAW	10146415	1	1	213	10 13 543 4	PRESSURE ADAPTER FASTEN
JAW	10150144	2	1	208	10 15 315 1	PRESSURE ADAPTER
KBA-RING	10143512	3	1	190	10 14 351 1	PISTON CPL.

Description	Item	Pos.	Quantity	Sheet	Assembly	Description
KEY	10663954	50	2	362	11 26 095 7	CONTROL STAND RIGHT
KEY	981809914	999	1	4	01 38 281 14	LR 1300 SX
KEY COLLAR	10447258	47	1	370	10 50 133 3	SLIDING DOOR
KEY RING RD 25	704214114	20	2	288	11 24 409 1	COVERS
KEY SWITCH	10539250	71	1	29	11 24 519 0	SUPERSTRUCTURE EL
KEYBOARD	10531718	12	1	356	10 51 907 9	CONTROL STAND LEFT
KEYBOARD OPERATING PANE	10036107	11	1	356	10 51 907 9	CONTROL STAND LEFT
KEYRING PENDANT	10595399	72	1	29	11 24 519 0	SUPERSTRUCTURE EL
KNOTTED-LINK CHAIN	740000801	16	2.3	288	11 24 409 1	COVERS
L RING JL50X2	429612001	57	1	412	96 93 178 01	TRACTION DRIVE
L-PROFILE	10581992	51	2	450	11 23 820 3	PIVOT PIECE CPL
LADDER	789038114	15	1	444	10 56 183 8	TOOL
LADDER CPL	10226190	1	1	59	99 08 706 14	LADDER MOUNTING
LADDER CPL	10349798	1	1	630	99 40 788 14	LADDER MOUNTING
LADDER MOUNTING	990870614	555	1	3	01 38 281 14	LR 1300 SX
LADDER MOUNTING	990870614	40	1	6	11 24 047 9	SUPERSTRUCTURE CPL
LADDER MOUNTING	994078814	583	1	3	01 38 281 14	LR 1300 SX
LAMP HOLDER	10537562	2	1	385	10 53 756 0	LAMP HOLDER CPL
LAMP HOLDER CPL	10537560	45	1	350	11 29 327 3	CABIN CPL
LASHING BALLAST	992980314	13	1	306	99 23 386 14	COUNTERWEIGHT ARRANGEM
LASHING STRAP	10020519	8	6	312	10 51 969 8	NEEDLE LUFFING WINCH HYD
LASHING STRAP	7621780	7	10	312	10 51 969 8	NEEDLE LUFFING WINCH HYD
LASHING SUPERSTRUCTURE	991804114	13	1	387	10 51 969 6	CONNECTION SUPERSTR UC
LATCHING DEVICE CPL	7025007	23	1	381	70 24 996	SEAT FRAME
LATCHING DEVICE CPL	7025007	23	1	693	70 28 516	SEAT FRAME
LEAD	11236713	6	1	700	11 21 750 0	LIQUEFIER
LEAD	600204105	45	5	708	10 56 013 7	MAINS SUPPLY BATTERY
LEAK OIL RETURN LINE	10145885	214	1	172	10 14 032 7	DIESEL ENGINE
LED LAMP	260514602	25	7	359	10 53 171 8	KEYBOARD
LED LAMP	260514602	38	1	629	11 21 530 2	CABIN REM. EL
LEVEL PROBE	10517426	81	1	29	11 24 519 0	SUPERSTRUCTURE EL
LEVEL SENSOR	10134517	22	1	171	10 14 032 7	DIESEL ENGINE
LEVEL SENSOR	10528589	18	1	48	10 56 073 3	FUEL TANK CPL
LEVEL SENSOR	10529210	14	1	44	10 56 070 1	TANK HYDR CPL
LEVEL SENSOR	11088130	1	1	185	10 13 451 7	LEVEL SENSOR
LEVER	10447749	5	1	25	10 44 510 5	QUICK RELEASE FITTING
LEVER	10447749	5	1	400	10 44 510 2	QUICK RELEASE FITTING
LEVER	10447749	5	1	401	10 44 510 1	QUICK RELEASE FITTING
LEVER ST.CONST.	992751514	18	2	644	10 51 971 3	SELF-LOADING SYSTEM RFK
LEVER TYPE HAND GREASE	10445635	13	1	52	11 27 315 5	CENTRAL GREASING
LID CPL	10501620	1	1	27	55 09 453 14	OIL MOTOR
LID CPL	10548543	35	1	8	11 29 618 6	SUPERSTRUCTURE HYDR
LID CPL	10551191	21	2	392	11 25 903 1	TUBING HYDR
LID PLATE	5005525	41	4	419	11 23 548 1	CENTRE PART CPL
LID PLATE	602016514	73	4	451	11 23 820 3	PIVOT PIECE CPL
LID PLATE	602025814	93	3	255	11 24 114 0	COOLER INSTALLATION WATE
LID PLATE	602026414	48	3	408	10 55 876 0	CRAWLER CARRIER RIGHT CP
LID PLATE	602026414	48	3	417	10 55 876 1	CRAWLER CARRIER LEFT CP
LID PLATE	7005053	92	3	255	11 24 114 0	COOLER INSTALLATION WATE
LID PLATE	7005053	39	2	419	11 23 548 1	CENTRE PART CPL
LID PLATE	7008583	40	2	419	11 23 548 1	CENTRE PART CPL
LIEBHERR SIGN	993419814	80	2	451	11 23 820 3	PIVOT PIECE CPL
LIFETIME SEAL	10352364	150	1	669	59 21 826 14	SUPPORT CYL
LIFETIME SEAL	10352365	155	1	669	59 21 826 14	SUPPORT CYL
LIFETIME SEAL	11253456	7	7	396	11 89 617 8	SEALING SET
LIGHT BULB	607021114	15	1	32	70 27 205	WORK LIGHT
LIGHT BULB	607021714	42	1	351	11 27 973 6	CABIN EL
LIGHT BULB	607021714	42	1	354	10 55 963 5	SWITCH CABINET X1
LIGHT BULB	607023214	43	1	351	11 27 973 6	CABIN EL
LIGHT BULB	607023214	43	1	354	10 55 963 5	SWITCH CABINET X1

Description	Item	Pos.	Quantity	Sheet	Assembly	Description
LIMIT SENSOR	606655108	43	1	28	11 24 519 0	SUPERSTRUCTURE EL
LIMIT STOP	10539631	45	2	408	10 55 876 0	CRAWLER CARRIER RIGHT CP
LIMIT STOP	10539631	45	2	417	10 55 876 1	CRAWLER CARRIER LEFT CP
LIMIT STOP	990443514	8	2	290	10 57 883 5	DOOR
LIMIT STOP	990443514	8	2	292	10 57 897 6	DOOR
LIMIT STOP	990443514	3	2	294	10 57 940 0	DOOR
LIMIT STOP	990443514	3	2	295	10 56 623 7	DOOR
LIMIT STOP	990443514	8	2	296	10 56 580 8	DOOR
LIMIT STOP BUFFER	592291314	108	1	367	10 35 250 8	CABIN
LIMIT STOP PLATE	958908914	17	1	459	10 58 193 7	GRATING CPL
LIMIT STOP SCREW	11267448	2	1	90	11 06 730 5	SHUTTLE VALVE
LIMIT STOP SCREW M12X38 42	9885661	17	2	97	10 11 835 0	CONNECTION HOUSING
LIMIT STOP ST.CONST.	919916514	8	2	533	11 29 426 7	MOUNTING PARTS
LIMIT SWITCH EL	10511671	5	1	633	10 51 176 9	NEEDLE BOOM CPL
LIMIT SWITCH HOISTING ABOV	927521808	30	2	566	10 57 624 5	CABLE LOOM
LIMIT SWITCH HOISTING ABOV	927521808	36	1	578	97 14 959 03	HOIST LIMIT SWITCH EL
LIMIT SWITCH HOISTING ABOV	927521808	36	1	583	91 95 871 14	HOIST LIMIT SWITCH EL
LIMIT SWITCH HOISTING ABOV	927521808	36	1	634	10 51 167 1	LIMIT SWITCH EL
LIMIT SWITCH HOLDER	950563214	17	1	525	11 24 336 5	PIVOT PIECE NEEDLE CPL
LIMIT SWITCH INSTALLATION	11310932	46	1	6	11 24 047 9	SUPERSTRUCTURE CPL
LIQUEFIER	11217500	11	1	699	11 23 189 1	AIR CONDITIONING UNIT RFK
LOAD HOLDING VALVE	592022414	3	2	465	10 51 959 1	TUBING HYDR
LOAD HOOK	790386214	129	1	3	01 38 281 14	LR 1300 SX
LOCK NUT DIN 985	11219056	6	2	272	10 55 091 1	ADD-ON PRELIMINARY FUEL F
LOCK NUT M8 A2-70	10443136	5	1	221	10 14 736 9	INTAKE STACK ASSEMBLY
LOCK WASHER 10 254 SMO;E	10536579	19	4	450	11 23 820 3	PIVOT PIECE CPL
LOCK WASHER 10 254 SMO;E	10536579	16	4	513	11 28 610 5	RETAINING DEVICE CPL
LOCK WASHER 10 254 SMO;E	10536579	33	4	533	11 29 426 7	MOUNTING PARTS
LOCK WASHER 10 254 SMO;E	10536580	17	2	574	10 55 753 7	HOIST LIMITSWITCH LEFT IN
LOCK WASHER 10 254 SMO;E	10536580	17	2	575	10 55 757 6	HOIST LIMITSWITCH RIGHT I
LOCK WASHER 10 254 SMO;E	10536580	52	16	637	99 10 116 14	ROPE GUIDE
LOCK WASHER 10 254 SMO;E	10536580	11	4	706	10 52 293 0	SG TACHOGENERATOR RFK
LOCK WASHER 12 254 SMO;E	10536581	24	8	473	11 24 444 4	A-FRAME 1 CPL
LOCK WASHER 12 254 SMO;E	10536581	29	8	521	99 23 398 14	ROLLER SET
LOCK WASHER 12 254 SMO;E	10536581	14	4	537	99 35 031 14	ROPE GUARD CPL
LOCK WASHER 12 254 SMO;E	10536581	50	12	570	11 28 774 6	MOUNTING PARTS
LOCK WASHER 12 254 SMO;E	10536581	18	4	574	10 55 753 7	HOIST LIMITSWITCH LEFT IN
LOCK WASHER 12 254 SMO;E	10536581	18	4	575	10 55 757 6	HOIST LIMITSWITCH RIGHT I
LOCK WASHER 12 254 SMO;E	10536581	21	4	582	99 38 329 14	TIP BOOM CPL
LOCK WASHER 12 254 SMO;E	10536582	21	13	320	10 51 968 6	LUG SUPERSTRUCTURE CPL
LOCK WASHER 12 254 SMO;E	10536582	1	8	329	99 29 258 14	LUG SHEAVE SET
LOCK WASHER 12 254 SMO;E	10536582	48	2	582	99 38 329 14	TIP BOOM CPL
LOCK WASHER 14 27MNCRB5	10536583	16	4	529	11 29 649 2	PIN CPL
LOCK WASHER 16 27MNCRB5	10536597	30	8	521	99 23 398 14	ROLLER SET
LOCK WASHER 16 27MNCRB5	10536597	13	5	527	11 29 648 5	PIN CPL
LOCK WASHER 16 27MNCRB5	10536597	52	12	533	11 29 426 7	MOUNTING PARTS
LOCK WASHER 16 27MNCRB5	10536597	39	10	541	11 29 938 4	MOUNTING PARTS
LOCK WASHER 16 27MNCRB5	10536598	31	16	320	10 51 968 6	LUG SUPERSTRUCTURE CPL
LOCK WASHER 17X24X2.6	4239009	24	8	95	10 11 834 9	DOUBLE V-PUMP
LOCK WASHER 20 27MNCRB5	10536600	15	22	320	10 51 968 6	LUG SUPERSTRUCTURE CPL
LOCK WASHER 20X21X30X2.8	423912001	69	12	412	96 93 178 01	TRACTION DRIVE
LOCK WASHER 8 254 SMO;EN	10536577	16	4	574	10 55 753 7	HOIST LIMITSWITCH LEFT IN
LOCK WASHER 8 254 SMO;EN	10536577	16	4	575	10 55 757 6	HOIST LIMITSWITCH RIGHT I
LOCK WASHER 8 254 SMO;EN	10536577	22	2	680	11 22 344 2	CAMERA INSTALLATION
LOCKABLE TANK CAP	11101351	4	1	277	11 24 240 8	UREA CONTAINER
LOCKABLE TANK CAP	7365412	11	1	48	10 56 073 3	FUEL TANK CPL
LOCKING	10572075	36	1	368	10 22 645 4	DOOR ACCESSORIES
LOCKING BAR	10351784	14	1	290	10 57 883 5	DOOR
LOCKING BAR	10351784	14	1	292	10 57 897 6	DOOR
LOCKING BAR	10351784	14	1	294	10 57 940 0	DOOR

Description	Item	Pos.	Quantity	Sheet	Assembly	Description
LOCKING BAR	10351784	14	1	295	10 56 623 7	DOOR
LOCKING BAR	10351784	16	1	296	10 56 580 8	DOOR
LOCKING DEVICE	10227128	7	1	457	61 61 541 14	CABLE DRUM
LOCKING DEVICE	919617914	1	2	513	11 28 610 5	RETAINING DEVICE CPL
LOCKING PIECE	10116110	521	1	172	10 14 032 7	DIESEL ENGINE
LOCKING PIECES	10115664	452	1	172	10 14 032 7	DIESEL ENGINE
LOCKING PIECES	10119128	522	1	172	10 14 032 7	DIESEL ENGINE
LOCKING PIECES	10127979	526	1	173	10 14 032 7	DIESEL ENGINE
LOCKING PIECES	10128439	524	1	173	10 14 032 7	DIESEL ENGINE
LOCKING PIECES	10128440	1	1	244	10 12 843 9	LOCKING PIECES
LOCKING PIECES	10142747	630	1	173	10 14 032 7	DIESEL ENGINE
LOCKING PIECES	10144027	652	1	173	10 14 032 7	DIESEL ENGINE
LOCKING PIECES	10146374	656	1	173	10 14 032 7	DIESEL ENGINE
LOCKING PIECES	9078249	650	1	173	10 14 032 7	DIESEL ENGINE
LOCKING PIECES	9078301	654	1	173	10 14 032 7	DIESEL ENGINE
LOCKING PLATE	959912714	17	6	309	99 29 803 14	LASHING BALLAST
LOCKING RING	10573893	3	2	587	10 50 435 2	ROPE PULLEY
LOCKING RING	10598700	9	1	397	51 24 059 14	VARIABLE DISPLACEMENT MO
LOCKING RING 10	10447016	7	6	475	99 14 137 14	DEFLECTION PULLEY CPL
LOCKING RING 10	10447016	23	12	606	10 51 743 9	ROPE LUG CPL RFK
LOCKING RING 35X1.5	10008092	25	1	154	11 21 593 6	PUMP ELEMENT
LOCKING RING 4	10507964	56	12	34	10 56 645 8	TERMINAL BOX
LOCKING RING 8	10447017	10	4	363	91 65 251 14	CABLE DUCT CABINET 1
LOCKING RING 8	10447017	12	2	530	11 29 451 7	ROPE GUARD CPL
LOCKING RING 8	10447017	12	2	536	11 29 488 4	ROPE GUARD CPL
LOCKING RING 8	10447017	12	2	572	11 29 457 3	ROPE GUARD CPL
LOCKING RING 8	10447017	12	2	573	11 29 462 6	ROPE GUARD CPL
LOCKING RING 8	10447017	38	2	577	99 48 521 14	TIP BOOM CPL
LOCKING RING 8	10447017	20	10	606	10 51 743 9	ROPE LUG CPL RFK
LOCKING RING 8 A2	10558857	45	2	450	11 23 820 3	PIVOT PIECE CPL
LOCKING RING 8 A2	10558857	12	2	484	11 28 725 5	ROPE GUARD CPL
LOCKING RING AEHNL.DIN 98	10220937	25	1	144	11 22 127 4	PUMP ELEMENT
LOCKING RING DIN 471	10171594	29	3	412	96 93 178 01	TRACTION DRIVE
LOCKING RING DIN 471	4280008	31	4	97	10 11 835 0	CONNECTION HOUSING
LOCKING RING DIN 471 100X4	428011901	19	5	412	96 93 178 01	TRACTION DRIVE
LOCKING RING DIN 471 14X1 F	11293196	8	1	400	10 44 510 2	QUICK RELEASE FITTING
LOCKING RING DIN 471 17X1	428001014	45	1	615	54 02 703 14	FLANGE CPL
LOCKING RING DIN 471 25X1.2	4280020	3	3	457	61 61 541 14	CABLE DRUM
LOCKING RING DIN 471 35X1.5	428002914	13	1	617	54 02 705 14	DRIVE UNIT CPL
LOCKING RING DIN 471 45X1.7	10171583	49	3	412	96 93 178 01	TRACTION DRIVE
LOCKING RING DIN 471 45X1.7	4280032	41	2	124	10 13 802 7	REPAIR KIT SHAFT
LOCKING RING DIN 471 50X2	4280034	41	1	111	98 84 402	REPAIR KIT SHAFT
LOCKING RING DIN 471 55X2	428004514	30	1	616	54 02 704 14	POWER TAKE-OFF CPL
LOCKING RING DIN 471 55X3	400093303	39	3	412	96 93 178 01	TRACTION DRIVE
LOCKING RING DIN 471 A100X	10530197	360	8	78	11 24 682 0	DISTRIBUTOR GEARBOX
LOCKING RING DIN 471 A125X	485529714	370	2	78	11 24 682 0	DISTRIBUTOR GEARBOX
LOCKING RING DIN 472	4281017	40	1	124	10 13 802 7	REPAIR KIT SHAFT
LOCKING RING DIN 472	4281017	40	1	132	10 13 803 2	REPAIR KIT LOCK RING
LOCKING RING DIN 472 110X4	10171636	73	1	412	96 93 178 01	TRACTION DRIVE
LOCKING RING DIN 472 23X1.2	428107714	21	1	617	54 02 705 14	DRIVE UNIT CPL
LOCKING RING DIN 472 35X1.5	428100914	46	1	615	54 02 703 14	FLANGE CPL
LOCKING RING DIN 472 46X1.7	428107101	76	1	412	96 93 178 01	TRACTION DRIVE
LOCKING RING DIN 472 62X2	4281037	30	2	548	59 21 280 14	SINGLE-ACTING CYL
LOCKING RING DIN 472 62X2	4281037	14	1	617	54 02 705 14	DRIVE UNIT CPL
LOCKING RING DIN 472 80X2.5	4281013	4	1	615	54 02 703 14	FLANGE CPL
LOCKING RING DIN 472 90X3	4281016	31	1	616	54 02 704 14	POWER TAKE-OFF CPL
LOCKING RING DIN 472 J56X2	11268816	380	2	78	11 24 682 0	DISTRIBUTOR GEARBOX
LOCKING SET	11219369	4	1	84	11 21 991 0	PUMP HOUSING
LOUDSPEAKER	10350334	71	2	351	11 27 973 6	CABIN EL
LOW TEMPERATURE PACKAG	11295514	514	1	3	01 38 281 14	LR 1300 SX

Description	Item	Pos.	Quantity	Sheet	Assembly	Description
LOWERING BRAKE VALVE	10226750	2	2	645	10 51 971 2	SELF-LOADING SYSTEM HYD
LOWERING BRAKE VALVE	11239880	2	1	655	51 16 404 14	LOWERING BRAKE VALVE
LOWERING BRAKE VALVE	11239880	2	1	657	59 21 584 14	LOWERING BRAKE VALVE
LOWERING BRAKE VALVE	11300790	160	1	669	59 21 826 14	SUPPORT CYL
LOWERING BRAKE VALVE	511640414	3	1	652	10 51 973 8	SELF-LOADING SYSTEM HYD
LOWERING BRAKE VALVE	592158414	4	1	652	10 51 973 8	SELF-LOADING SYSTEM HYD
LUBE OIL FILTER ASSEMBLY	10142942	150	1	171	10 14 032 7	DIESEL ENGINE
LUBRICATING OIL LINE	10140137	7	1	236	10 14 013 6	EXHAUST TC MOUNTING
LUBRICATING OIL PUMP	10133945	140	1	171	10 14 032 7	DIESEL ENGINE
LUBRICATING OIL PUMP	10138565	1	1	202	10 13 394 5	LUBRICATING OIL PUMP
LUBRICATING OIL PUMP	592178914	580	1	78	11 24 682 0	DISTRIBUTOR GEARBOX
LUG SHEAVE SET	992925814	11	1	320	10 51 968 6	LUG SUPERSTRUCTURE CPL
LUG SUPERSTRUCTURE CPL	10519686	1	1	318	10 51 969 1	LUG SUPERSTRUCTURE CPL
LUG SUPERSTRUCTURE CPL	10519691	25	1	2	01 38 281 14	LR 1300 SX
LUMINOUS PUSH BUTTON CO	6204372	20	2	359	10 53 171 8	KEYBOARD
LUMINOUS SWITCH CONTACT	6001593	21	5	359	10 53 171 8	KEYBOARD
LUMINOUS SWITCH CONTACT	6001593	36	1	629	11 21 530 2	CABIN REM. EL
MAGNET COIL	11229186	1	2	20	10 59 143 5	DIRECTIONAL CONTROL VALV
MAGNET COIL	693208614	1	2	19	11 22 918 4	DIRECTIONAL CONTROL VALV
MAIN JET SOLEX 0.8MM	714001914	38	2	8	11 29 618 6	SUPERSTRUCTURE HYDR
MAIN JET SOLEX 0.8MM	714001914	5	1	689	10 51 728 1	TUBING HYDR
MAIN JET SOLEX 1.2MM	714002114	7	1	608	10 51 726 2	TUBING HYDR
MAIN LUG HYDR	10519687	2	1	320	10 51 968 6	LUG SUPERSTRUCTURE CPL
MAINS SUPPLY BATTERY	10560137	843	1	4	01 38 281 14	LR 1300 SX
MAINTANANCE SWITCH	11060522	20	1	264	11 24 114 2	SUCTION UNIT AIR
MALE INSERT	605604714	51	1	566	10 57 624 5	CABLE LOOM
MALE INSERT	605604714	31	1	578	97 14 959 03	HOIST LIMIT SWITCH EL
MALE INSERT	605604714	31	1	583	91 95 871 14	HOIST LIMIT SWITCH EL
MALE INSERT	605604714	31	1	634	10 51 167 1	LIMIT SWITCH EL
MANIFOLD FOR WATER CPL.	10146012	388	1	172	10 14 032 7	DIESEL ENGINE
MANUAL VENTILATION PUMP	10129218	4	1	272	10 55 091 1	ADD-ON PRELIMINARY FUEL F
MASTER SWITCH	11214818	10	1	356	10 51 907 9	CONTROL STAND LEFT
MASTER SWITCH	11214820	10	1	305	10 51 127 4	DOUBLE T-MASTER SWITCH
MEASURING HOSE	7002475	11	2	444	10 56 183 8	TOOL
MIRROR	592290814	8	1	375	59 22 905 14	MIRROR + SUNN VISOR
MIRROR + SUNN VISOR	592290514	85	1	367	10 35 250 8	CABIN
MIXER	10144086	5	1	268	11 24 114 3	EXHAUST GAS SYSTEM
MODEM CPL RFK	11223226	10	1	598	10 51 118 5	MODEM RFK
MODEM RFK	10511185	438	1	3	01 38 281 14	LR 1300 SX
MODULE ASSEMBLY GROUP	916793914	1	2	62	10 56 069 4	MODULES INSTALLATION
MODULE REFUELLING SYSTE	10521559	11	1	710	10 52 155 4	REFUELLING SYSTEM RFK
MODULES INSTALLATION	10560694	49	1	6	11 24 047 9	SUPERSTRUCTURE CPL
MOISTURE SENSOR	10141261	15	1	275	11 24 114 5	ASSEMBLY INSTAL.
MONITOR CABIN ADD-ON	10578486	10	1	686	10 58 064 7	VIDEO MONITORING SYSTEM
MONITOR LCD	11240503	1	1	684	10 53 352 4	CABIN EL
MONITOR LCD CPL	11260077	24	1	362	11 26 095 7	CONTROL STAND RIGHT
MONITOR SCREEN HOUSING	11262812	2	1	383	11 26 095 6	STEERING CONSOLE RIGHT
MOTOR	592293214	60	1	379	10 58 467 1	WATER VALVE
MOTOR BEARING CPL	11241138	12	1	73	11 24 048 0	CENTRAL POWER UNIT
MOTOR CONTROL DEVICE	10145725	570	1	173	10 14 032 7	DIESEL ENGINE
MOTOR CONTROL DEVICE	10883842	1	1	247	10 14 572 5	MOTOR CONTROL DEVICE
MOTOR COWLING	10545910	2	1	282	11 24 409 0	PANELLING SUPERSTR. INSTA
MOTOR FLANGE	540273014	7	1	617	54 02 705 14	DRIVE UNIT CPL
MOTOR HOLDER	11267559	26	1	257	10 57 423 7	COOLER MOTOR
MOTOR PRE-ASSEMBLY	11241139	20	1	73	11 24 048 0	CENTRAL POWER UNIT
MOTOR PROTECTION SWITC	606271314	33	1	708	10 56 013 7	MAINS SUPPLY BATTERY
MOUNTING BRACKET	10578343	33	1	58	10 58 163 4	CABIN SUSPENSION CPL
MOUNTING LINK CPL	993560614	26	4	644	10 51 971 3	SELF-LOADING SYSTEM RFK
MOUNTING LINK LEFT CPL	11235361	11	1	64	10 51 969 4	A-FRAME ERECTION CYL INST
MOUNTING LINK RIGHT CPL	11235382	21	1	64	10 51 969 4	A-FRAME ERECTION CYL INST

Description	Item	Pos.	Quantity	Sheet	Assembly	Description
MOUNTING LINK ST. CONST.	992982314	14	6	309	99 29 803 14	LASHING BALLAST
MOUNTING PARTS	10014275	92	1	692	10 04 363 3	DRIVERS SEAT AIR-SUSPEN
MOUNTING PARTS	10014276	93	1	692	10 04 363 3	DRIVERS SEAT AIR-SUSPEN
MOUNTING PARTS	10526560	11	1	306	99 23 386 14	COUNTERWEIGHT ARRANGEM
MOUNTING PARTS	11265572	11	1	52	11 27 315 5	CENTRAL GREASING
MOUNTING PARTS	11267716	11	1	704	11 28 423 6	CENTRAL LUBRICATION RFK
MOUNTING PARTS	11283576	2	1	514	99 06 461 14	ANEMOMETER CPL
MOUNTING PARTS	11286299	11	1	509	11 24 132 4	BOOM HEAD CPL
MOUNTING PARTS	11287746	11	1	564	11 24 263 6	NEEDLE HEAD CPL
MOUNTING PARTS	11294267	11	1	531	11 24 475 9	A-FRAME 2 CPL
MOUNTING PARTS	11299384	11	1	538	11 24 611 6	A-FRAME 3 CPL
MOUNTING PARTS SUPERST	11244837	14	1	71	11 26 560 6	AGGREGATE DIESEL ENGINE
MOUNTING SHEET	10149477	2	1	239	10 14 584 5	GENERATOR, PRE-ASSEMBLE
MULTI-DISC CARRIER	501559414	96	1	339	99 04 645 14	DRIVE
MULTI-DISC CARRIER	944406203	75	1	412	96 93 178 01	TRACTION DRIVE
MUSHROOM BUTTON	592289914	73	1	367	10 35 250 8	CABIN
NAMEPLATE ACCIDENT PRE	11461533	42	1	28	11 24 519 0	SUPERSTRUCTURE EL
NAMEPLATE CONTROL PLATE	10549547	51	1	350	11 29 327 3	CABIN CPL
NAMEPLATE CONTROL PLATE	10549800	52	1	350	11 29 327 3	CABIN CPL
NAMEPLATE CONTROL PLATE	10579680	12	1	601	11 29 551 4	LOW TEMPERATURE PACKAG
NAMEPLATE UVV	773195614	460	2	311	10 51 969 7	NEEDLE LUFFING WINCH
NAMEPLATE UVV	773195614	460	2	606	10 51 743 9	ROPE LUG CPL RFK
NEEDLE ADD-ON PARTS	11246182	90	1	3	01 38 281 14	LR 1300 SX
NEEDLE BOOM CPL	10511769	600	1	3	01 38 281 14	LR 1300 SX
NEEDLE BOOM ST. CONST.	993118114	10	1	633	10 51 176 9	NEEDLE BOOM CPL
NEEDLE CAGE	747462814	20	1	616	54 02 704 14	POWER TAKE-OFF CPL
NEEDLE HEAD CPL	11242636	105	1	3	01 38 281 14	LR 1300 SX
NEEDLE LUFFING WINCH	10519697	23	1	2	01 38 281 14	LR 1300 SX
NEEDLE LUFFING WINCH HYD	10519698	2	1	311	10 51 969 7	NEEDLE LUFFING WINCH
NEEDLES	540244214	14	72	613	54 02 701 14	PLANETARY STAGE
NEEDLES	540271114	24	48	613	54 02 701 14	PLANETARY STAGE
NON-RETURN VALVE	10099055	12	2	392	11 25 903 1	TUBING HYDR
NON-RETURN VALVE	10119971	9	1	186	10 14 671 6	OIL LINE PRE-ASSEMBLY
NON-RETURN VALVE	10352371	170	1	669	59 21 826 14	SUPPORT CYL
NON-RETURN VALVE	11229182	4	1	17	10 35 148 6	VALVE BLOCK
NON-RETURN VALVE	11233729	3	2	68	10 22 540 8	VALVE BLOCK
NON-RETURN VALVE	11233742	9	1	68	10 22 540 8	VALVE BLOCK
NON-RETURN VALVE	11233749	10	1	68	10 22 540 8	VALVE BLOCK
NON-RETURN VALVE	11233751	11	1	68	10 22 540 8	VALVE BLOCK
NON-RETURN VALVE	11270155	3	1	467	59 20 224 14	LOAD HOLDING VALVE
NON-RETURN VALVE	510411614	10	1	465	10 51 959 1	TUBING HYDR
NON-RETURN VALVE	510493714	4	1	435	11 26 260 6	WINCH 1 HYDR
NON-RETURN VALVE	510493714	4	1	441	11 26 261 1	WINCH 2 HYDR
NON-RETURN VALVE	511419314	22	1	75	11 24 773 5	HYDR POWER UNIT
NON-RETURN VALVE	511458114	16	4	392	11 25 903 1	TUBING HYDR
NON-RETURN VALVE	511458814	5	1	435	11 26 260 6	WINCH 1 HYDR
NON-RETURN VALVE	511458814	5	1	441	11 26 261 1	WINCH 2 HYDR
NON-RETURN VALVE	511458814	13	1	547	10 53 146 1	TUBING HYDR
NON-RETURN VALVE	511607214	31	1	8	11 29 618 6	SUPERSTRUCTURE HYDR
NON-RETURN VALVE	511631514	41	1	10	11 29 618 6	SUPERSTRUCTURE HYDR
NON-RETURN VALVE	592044714	33	1	8	11 29 618 6	SUPERSTRUCTURE HYDR
NON-RETURN VALVE	592052914	29	1	713	51 00 959 14	REFUEL PUMP
NOTCHED SLEEVE	540272314	33	1	615	54 02 703 14	FLANGE CPL
NOZZLE	11226142	200	1	346	51 14 347 14	SG SAFETY BLOCK
NOZZLE	11233732	7	1	68	10 22 540 8	VALVE BLOCK
NOZZLE	11239895	3	1	657	59 21 584 14	LOWERING BRAKE VALVE
NOZZLE	11249191	27	1	67	59 21 041 14	DOUBLE-ACTING CYL
NUT DIN 934 M30	10584965	11	4	586	79 04 112 14	BOTTOM HOOK BLOCK
NUT DIN 934 M30	10584965	11	4	593	79 04 871 14	BOTTOM HOOK BLOCK
NUT LWN 8-60-106 M33 10	412705014	12	80	387	10 51 969 6	CONNECTION SUPERSTR UC

Description	Item	Pos.	Quantity	Sheet	Assembly	Description
NUT M22X1.5 11SMNPB30+C;E	9072969	13	1	136	10 12 226 5	SEAL KIT REGULATING VALVE
NUT M24X1 9SMNPB28K	9077401	28	1	136	10 12 226 5	SEAL KIT REGULATING VALVE
O-RING	10002167	4	2	230	10 14 821 5	THERMOSTAT HOUSING ASS
O-RING	10002309	24	1	121	10 12 224 8	RK ADDITIONAL PARTS
O-RING	10002309	24	1	134	10 13 803 3	SEAL KIT CPL.
O-RING	10004261	9	1	175	10 14 768 6	POWER UNIT SUPPORT ATT
O-RING	10016874	17	2	133	10 12 226 2	REGULATION REPAIR KIT
O-RING	10016947	28	2	135	10 13 803 4	GASKET KIT INT.FLANGE
O-RING	10097551	4	1	91	11 26 744 7	SHUTTLE VALVE
O-RING	10097988	6	2	413	79 05 233 14	CARRYING ROLLER CPL
O-RING	10099094	24	1	144	11 22 127 4	PUMP ELEMENT
O-RING	10099094	24	1	151	10 35 161 0	SEALING SET CPL
O-RING	10115240	27	1	399	11 22 473 8	ADJUSTMENT
O-RING	10116255	1	1	224	10 29 998 8	HEATING FLANGE PRE.ASS.
O-RING	10130757	2	1	210	10 13 508 0	PRESSURE ADAPTER
O-RING	10130757	1	1	211	10 14 121 6	SEAL KIT PRESSURE ADAPTE
O-RING	10217777	2	1	244	10 12 843 9	LOCKING PIECES
O-RING	10218953	3	1	45	10 51 572 4	RETURN FILTER
O-RING	10282774	4	2	187	10 14 275 8	CYLINDER
O-RING	10340226	20	2	273	10 30 300 7	FUEL PREFILTER
O-RING	10342770	3	1	193	10 13 728 5	CYLINDER HEAD
O-RING	10350604	2	1	159	10 22 358 1	PRESSURE FILTER
O-RING	10351605	22	1	144	11 22 127 4	PUMP ELEMENT
O-RING	10351605	22	1	151	10 35 161 0	SEALING SET CPL
O-RING	10351608	23	4	144	11 22 127 4	PUMP ELEMENT
O-RING	10351608	23	4	151	10 35 161 0	SEALING SET CPL
O-RING	10352356	105	3	669	59 21 826 14	SUPPORT CYL
O-RING	10352361	135	1	669	59 21 826 14	SUPPORT CYL
O-RING	10352362	145	1	669	59 21 826 14	SUPPORT CYL
O-RING	10548553	59	1	339	99 04 645 14	DRIVE
O-RING	10593504	320	2	78	11 24 682 0	DISTRIBUTOR GEARBOX
O-RING	10802833	22	1	154	11 21 593 6	PUMP ELEMENT
O-RING	11008055	3	1	221	10 14 736 9	INTAKE STACK ASSEMBLY
O-RING	11066168	4	1	202	10 13 394 5	LUBRICATING OIL PUMP
O-RING	11212730	10	1	89	11 06 730 4	SHUTDOWN VALVE
O-RING	11215707	23	4	154	11 21 593 6	PUMP ELEMENT
O-RING	11219374	8	1	92	11 21 935 0	PUMP COVER
O-RING	11219376	10	1	94	11 21 991 8	BEARING FLANGE
O-RING	11221283	2	1	150	11 22 127 6	ADAPTER
O-RING	11224740	25	1	397	51 24 059 14	VARIABLE DISPLACEMENT MO
O-RING	11226084	90	1	346	51 14 347 14	SG SAFETY BLOCK
O-RING	11226144	210	4	346	51 14 347 14	SG SAFETY BLOCK
O-RING	11239916	4	1	655	51 16 404 14	LOWERING BRAKE VALVE
O-RING	11249804	9	1	396	11 89 617 8	SEALING SET
O-RING	11251423	8	2	396	11 89 617 8	SEALING SET
O-RING	11267377	6	1	82	11 21 992 7	COVER
O-RING	11267377	6	1	83	11 21 992 9	COVER
O-RING	11267418	9	1	87	10 59 347 4	PRESSURE LIMITING VALVE
O-RING	11267418	8	1	88	11 21 936 9	LOCKING SET
O-RING	510587908	26	1	167	10 57 532 2	INTAKE PIPE OIL CPL
O-RING	592293414	180	1	378	59 22 930 14	AIR CONDITIONER
O-RING	592293514	190	1	378	59 22 930 14	AIR CONDITIONER
O-RING	7000329	23	2	100	92 74 731	SEAL KIT CONNECTING HOUS
O-RING	7004512	32	1	95	10 11 834 9	DOUBLE V-PUMP
O-RING	7004512	32	1	114	92 76 408	SEAL KIT DOUBLE PUMP
O-RING	7006213	9	1	88	11 21 936 9	LOCKING SET
O-RING	7007492	10	1	87	10 59 347 4	PRESSURE LIMITING VALVE
O-RING	7009080	5	1	230	10 14 821 5	THERMOSTAT HOUSING ASS
O-RING	7019733	2	1	149	70 19 834	ADAPTER
O-RING	7022118	29	2	135	10 13 803 4	GASKET KIT INT.FLANGE

Description	Item	Pos.	Quantity	Sheet	Assembly	Description
O-RING	7022118	14	1	397	51 24 059 14	VARIABLE DISPLACEMENT MO
O-RING	7028151	26	1	399	11 22 473 8	ADJUSTMENT
O-RING	726401514	15	1	48	10 56 073 3	FUEL TANK CPL
O-RING	726403201	89	1	412	96 93 178 01	TRACTION DRIVE
O-RING	726403514	18	1	24	51 05 719 14	QUICK-FITTING THREAD COU
O-RING	726404414	20	4	168	10 58 017 0	RETURN PIPE
O-RING	726408414	19	1	24	51 05 719 14	QUICK-FITTING THREAD COU
O-RING	726409714	27	1	167	10 57 532 2	INTAKE PIPE OIL CPL
O-RING	726409814	24	3	44	10 56 070 1	TANK HYDR CPL
O-RING	726410201	79	1	412	96 93 178 01	TRACTION DRIVE
O-RING	726411214	29	3	75	11 24 773 5	HYDR POWER UNIT
O-RING	726411614	2	1	22	51 17 042 14	QUICK-FITTING THREAD COU
O-RING	726411614	2	1	446	51 17 043 14	QUICK-FITTING THREAD COU
O-RING	726424214	16	1	617	54 02 705 14	DRIVE UNIT CPL
O-RING	726428401	91	1	412	96 93 178 01	TRACTION DRIVE
O-RING	726428714	25	2	44	10 56 070 1	TANK HYDR CPL
O-RING	726429814	5	1	91	11 26 744 7	SHUTTLE VALVE
O-RING	726431414	25	2	167	10 57 532 2	INTAKE PIPE OIL CPL
O-RING	726431414	29	1	167	10 57 532 2	INTAKE PIPE OIL CPL
O-RING	726450601	6	2	412	96 93 178 01	TRACTION DRIVE
O-RING	726456214	58	1	339	99 04 645 14	DRIVE
O-RING	726456914	8	1	23	51 33 139 14	DOUBLE-ACTING CYL
O-RING	726456914	8	1	690	59 20 008 14	DOUBLE-ACTING CYL
O-RING	726459414	12	1	397	51 24 059 14	VARIABLE DISPLACEMENT MO
O-RING	726461014	24	2	392	11 25 903 1	TUBING HYDR
O-RING	726461714	9	2	344	10 55 216 1	TUBING HYDR
O-RING	7264625	1	1	183	50 04 624	OIL DRAIN PLUG
O-RING	726464214	3	1	22	51 17 042 14	QUICK-FITTING THREAD COU
O-RING	726464214	3	1	446	51 17 043 14	QUICK-FITTING THREAD COU
O-RING	726468814	20	1	548	59 21 280 14	SINGLE-ACTING CYL
O-RING	726469014	70	1	615	54 02 703 14	FLANGE CPL
O-RING	7380015	22	2	100	92 74 731	SEAL KIT CONNECTING HOUS
O-RING	7380083	3	1	232	10 14 274 2	COOLANT PIPE BEND ADD-ON
O-RING	7380120	28	2	100	92 74 731	SEAL KIT CONNECTING HOUS
O-RING	7380297	39	1	124	10 13 802 7	REPAIR KIT SHAFT
O-RING	7380297	39	1	132	10 13 803 2	REPAIR KIT LOCK RING
O-RING	7380297	31	1	134	10 13 803 3	SEAL KIT CPL.
O-RING	7380297	21	1	140	10 13 452 1	THROUGH DRIVE
O-RING	7380348	24	2	100	92 74 731	SEAL KIT CONNECTING HOUS
O-RING	7380423	12	1	182	10 14 861 5	OIL SUMP PRE-ASS.
O-RING	7380574	18	1	133	10 12 226 2	REGULATION REPAIR KIT
O-RING	7380576	27	1	136	10 12 226 5	SEAL KIT REGULATING VALVE
O-RING	7380596	81	1	102	92 73 644	SEAL KIT REGULATING VALVE
O-RING	7380601	22	1	138	10 13 000 5	THROUGH DRIVE
O-RING	7380601	22	1	140	10 13 452 1	THROUGH DRIVE
O-RING	7380605	22	1	137	10 12 987 4	THROUGH DRIVE
O-RING	7380605	5	1	222	10 14 736 4	AIR INTAKE ASSEMBLY
O-RING	7380605	40	1	261	11 24 114 1	COOLER INSTALLATION CHA
O-RING	7380608	26	1	136	10 12 226 5	SEAL KIT REGULATING VALVE
O-RING	7380610	23	2	135	10 13 803 4	GASKET KIT INT.FLANGE
O-RING	7380612	65	1	102	92 73 644	SEAL KIT REGULATING VALVE
O-RING	7380648	32	10	100	92 74 731	SEAL KIT CONNECTING HOUS
O-RING	7380648	64	5	101	90 74 418	REGULATING VALVE
O-RING	7380648	64	5	102	92 73 644	SEAL KIT REGULATING VALVE
O-RING	7380653	8	2	175	10 14 768 6	POWER UNIT SUPPORT ATT
O-RING	7380653	9	1	242	10 11 557 7	FLYWHEEL HOUSING MOUNT
O-RING	7380656	18	4	114	92 76 408	SEAL KIT DOUBLE PUMP
O-RING	7380657	36	1	112	92 68 016	REPAIR KIT LOCK RING
O-RING	7380657	2	1	252	10 14 637 4	LOCKING PIECES
O-RING	7380691	22	1	139	10 13 235 7	CONSTRUCTION KIT OUTPUT

Description	Item	Pos.	Quantity	Sheet	Assembly	Description
O-RING	7380691	22	1	141	10 13 806 8	CONSTRUCTION KIT OUTPUT
O-RING	7380865	62	1	102	92 73 644	SEAL KIT REGULATING VALVE
O-RING	7380868	70	1	102	92 73 644	SEAL KIT REGULATING VALVE
O-RING	7380888	56	2	100	92 74 731	SEAL KIT CONNECTING HOUS
O-RING	7380888	61	1	101	90 74 418	REGULATING VALVE
O-RING	7380888	61	1	102	92 73 644	SEAL KIT REGULATING VALVE
O-RING	7380955	9	2	200	10 12 948 0	OIL COOLER, PRE-ASSEMBLE
O-RING	7380970	41	1	261	11 24 114 1	COOLER INSTALLATION CHA
O-RING	7380986	12	1	273	10 30 300 7	FUEL PREFILTER
O-RING	7380987	21	1	136	10 12 226 5	SEAL KIT REGULATING VALVE
O-RING	7381004	70	1	113	92 73 187	REPAIR KIT MAGNET
O-RING	7381013	23	2	121	10 12 224 8	RK ADDITIONAL PARTS
O-RING	7381013	23	2	134	10 13 803 3	SEAL KIT CPL.
O-RING	7381056	24	1	102	92 73 644	SEAL KIT REGULATING VALVE
O-RING	7381082	82	1	102	92 73 644	SEAL KIT REGULATING VALVE
O-RING	7381087	63	1	102	92 73 644	SEAL KIT REGULATING VALVE
O-RING	7381103	60	1	102	92 73 644	SEAL KIT REGULATING VALVE
O-RING	7381103	2	1	245	10 12 797 9	LOCKING PIECES
O-RING	7381103	2	1	251	10 13 307 7	ROTATIONAL SPEED SENSOR
O-RING	7381127	21	1	130	10 12 352 8	STOP PLUG
O-RING	7381127	21	1	135	10 13 803 4	GASKET KIT INT.FLANGE
O-RING	7381128	20	1	130	10 12 352 8	STOP PLUG
O-RING	7381128	22	1	135	10 13 803 4	GASKET KIT INT.FLANGE
O-RING	7381438	12	1	119	10 12 321 4	SEAL KIT PRESSUR.CONTROL
O-RING	7381439	11	1	119	10 12 321 4	SEAL KIT PRESSUR.CONTROL
O-RING	7381440	10	1	119	10 12 321 4	SEAL KIT PRESSUR.CONTROL
O-RING	7381442	23	1	102	92 73 644	SEAL KIT REGULATING VALVE
O-RING	7381446	22	1	136	10 12 226 5	SEAL KIT REGULATING VALVE
O-RING	7381526	4	1	233	10 14 274 4	COOLING WATER AIR BLEED
O-RING	7381593	7	2	179	10 14 201 8	CRANKCASE BREATHER ASS
O-RING	7381685	4	1	203	10 13 394 7	SUCTION PUMP WITH FASTEN
O-RING	7381779	7	2	175	10 14 768 6	POWER UNIT SUPPORT ATT
O-RING	7382059	5	1	202	10 13 394 5	LUBRICATING OIL PUMP
O-RING	7412937	15	1	273	10 30 300 7	FUEL PREFILTER
O-RING	790311914	30	1	75	11 24 773 5	HYDR POWER UNIT
O-RING	790347014	330	1	78	11 24 682 0	DISTRIBUTOR GEARBOX
O-RING	790400614	19	1	548	59 21 280 14	SINGLE-ACTING CYL
O-RING	9177947	28	1	167	10 57 532 2	INTAKE PIPE OIL CPL
OBSTRUCTION LIGHT	10226144	31	2	628	99 24 978 14	BOOM ELECTRICS
OIL COOLER	10352185	1	1	26	10 22 592 5	COOLER MOTOR
OIL COOLER	5700088	2	1	200	10 12 948 0	OIL COOLER, PRE-ASSEMBLE
OIL COOLER ADD-ON	10129481	130	1	171	10 14 032 7	DIESEL ENGINE
OIL COOLER HOUSING	10129479	1	1	200	10 12 948 0	OIL COOLER, PRE-ASSEMBLE
OIL COOLER INSTALLATION	10519616	14	1	6	11 24 047 9	SUPERSTRUCTURE CPL
OIL COOLER, PRE-ASSEMBLE	10129480	1	1	199	10 12 948 1	OIL COOLER ADD-ON
OIL DIPSTICK CPL.	10142567	4	1	169	11 24 113 9	MOTOR PRE-ASSEMBLY
OIL DIPSTICK WITH PIPE	10145919	21	1	171	10 14 032 7	DIESEL ENGINE
OIL DRAIN PLUG	5004624	8	1	182	10 14 861 5	OIL SUMP PRE-ASS.
OIL DRAIN PLUG G1"X11 MS	403900714	17	4	44	10 56 070 1	TANK HYDR CPL
OIL DRAIN PLUG G1"X11 MS	403900714	16	1	48	10 56 073 3	FUEL TANK CPL
OIL DRAIN PLUG G1"X11 MS	403900714	33	2	167	10 57 532 2	INTAKE PIPE OIL CPL
OIL DRAIN PLUG G1"X11 MS	403900714	41	1	254	11 24 114 0	COOLER INSTALLATION WATE
OIL DRAIN PLUG M22X1.5	511442214	27	1	75	11 24 773 5	HYDR POWER UNIT
OIL LEVEL SIGHT GLASS	11287761	16	1	259	11 28 734 7	EQUALIZING RESERVOIR
OIL LINE	10583845	4	1	324	10 55 156 3	WINCH
OIL LINE	11893216	6	1	425	10 53 039 8	WINCH
OIL LINE PRE-ASSEMBLY	10146716	25	1	171	10 14 032 7	DIESEL ENGINE
OIL MOTOR	510232214	2	1	608	10 51 726 2	TUBING HYDR
OIL MOTOR	512250114	6	1	257	10 57 423 7	COOLER MOTOR
OIL MOTOR	512252714	2	1	312	10 51 969 8	NEEDLE LUFFING WINCH HYD

Description	Item	Pos.	Quantity	Sheet	Assembly	Description
OIL MOTOR	512294214	2	1	321	10 51 968 7	MAIN LUG HYDR
OIL MOTOR	512299114	3	2	344	10 55 216 1	TUBING HYDR
OIL MOTOR	550945314	6	1	26	10 22 592 5	COOLER MOTOR
OIL RETURN PIPE	10131350	1	1	186	10 14 671 6	OIL LINE PRE-ASSEMBLY
OIL RETURN PIPE	10140138	17	1	236	10 14 013 6	EXHAUST TC MOUNTING
OIL SIGHT GLASS	5106280	18	4	44	10 56 070 1	TANK HYDR CPL
OIL SUMP	10148614	1	1	182	10 14 861 5	OIL SUMP PRE-ASS.
OIL SUMP PRE-ASS.	10148615	1	1	181	10 14 844 4	OIL SUMP WITH FASTENING
OIL SUMP WITH FASTENING	10148444	20	1	171	10 14 032 7	DIESEL ENGINE
OIL-GAUGING INSTRUMENT	933675501	980	1	315	96 96 248 01	WINCH
OIL-LEVEL GAUGE	10145918	2	1	184	10 14 591 9	OIL DIPSTICK WITH PIPE
OIL-LEVEL GAUGE	11294364	180	1	78	11 24 682 0	DISTRIBUTOR GEARBOX
OIL-PRESSURE UNIT	592054714	95	1	339	99 04 645 14	DRIVE
OMNIFIT	7016208	106	1	123	10 13 802 6	RK CYL.+CONTROL PLATE+SH
OMNIFIT	7016208	106	1	129	10 14 131 6	TERMINAL BOARD PRE-ASS.
OPERATING HOURS COUNTE	10599206	31	1	356	10 51 907 9	CONTROL STAND LEFT
OPERATION	7028257	30	1	693	70 28 516	SEAT FRAME
OPERATIONAL CONTROL	592291914	123	1	367	10 35 250 8	CABIN
OPERATOR SEAT	10225068	11	1	350	11 29 327 3	CABIN CPL
ORIFICE	10143665	2	1	116	10 12 878 7	V PUMP
ORIFICE	10226479	5	1	370	10 50 133 3	SLIDING DOOR
ORIFICE	11248964	21	1	282	11 24 409 0	PANELLING SUPERSTR. INSTA
ORIFICE	11248966	22	1	282	11 24 409 0	PANELLING SUPERSTR. INSTA
ORIFICE	11248990	19	2	282	11 24 409 0	PANELLING SUPERSTR. INSTA
ORIFICE	11248991	15	2	282	11 24 409 0	PANELLING SUPERSTR. INSTA
ORIFICE	11248992	20	2	282	11 24 409 0	PANELLING SUPERSTR. INSTA
OUTER MULTI-DISC	501540414	97	8	339	99 04 645 14	DRIVE
OUTLET MANIFOLD	10141440	1	1	235	10 14 144 3	EXHAUST PIPE PRE-ASS.
OUTLET MANIFOLD	10141442	2	2	235	10 14 144 3	EXHAUST PIPE PRE-ASS.
OUTLET VALVE	10136751	4	2	192	10 13 728 6	CYLINDER HEAD PRE-ASS.
OUTPUT MODULE	10143994	2	1	269	10 14 404 9	SCR CPL.
OUTRIGGER	919014814	23	1	637	99 10 116 14	ROPE GUIDE
OUTRIGGER	919017314	24	1	637	99 10 116 14	ROPE GUIDE
OUTSIDE MIRROR	779002114	43	1	350	11 29 327 3	CABIN CPL
PAINTING SPECIAL REQUIREM	11892033	55	1	2	01 38 281 14	LR 1300 SX
PAN-HEAD SCREW ISO 7045	10541536	19	20	350	11 29 327 3	CABIN CPL
PAN-HEAD SCREW ISO 7045 M	10541540	4	11	383	11 26 095 6	STEERING CONSOLE RIGHT
PAN-HEAD SCREW ISO 7045	10541561	28	16	350	11 29 327 3	CABIN CPL
PAN-HEAD SCREW ISO 7045	10541561	6	3	384	97 07 857 03	SPIRIT LEVEL ASSY.
PAN-HEAD SCREW ISO 7045	400180214	35	8	350	11 29 327 3	CABIN CPL
PAN-HEAD SCREW ISO 7045	400180214	30	4	359	10 53 171 8	KEYBOARD
PAN-HEAD SCREW ISO 7045	10541563	16	2	710	10 52 155 4	REFUELLING SYSTEM RFK
PAN-HEAD SCREW ISO 7045	400180314	36	15	350	11 29 327 3	CABIN CPL
PANEL SCREW	11219933	8	1	84	11 21 991 0	PUMP HOUSING
PANELLING RIGHT	592289814	72	1	367	10 35 250 8	CABIN
PANELLING SUPERSTR. INSTA	11244090	11	1	71	11 26 560 6	AGGREGATE DIESEL ENGINE
PARALLEL PIN	10598777	23	2	399	11 22 473 8	ADJUSTMENT
PARALLEL PIN 8M6X24 ST 2 K	10011777	9	2	204	10 13 382 3	SUCTION PUMP PRE-ASS.
PARALLEL PIN ISO 2338 6X18	570948608	33	1	154	11 21 593 6	PUMP ELEMENT
PARALLEL PIN ISO 8734 10M6X	4981077	22	2	121	10 12 224 8	RK ADDITIONAL PARTS
PARALLEL PIN ISO 8734 4M6X1	4901104	8	1	204	10 13 382 3	SUCTION PUMP PRE-ASS.
PARALLEL PIN ISO 8734 5M6X	4980046	44	2	99	10 11 835 7	REPAIR KIT CONNECTION HO
PARALLEL PIN ISO 8734 6M6X	4980000	3	1	203	10 13 394 7	SUCTION PUMP WITH FASTEN
PARTITION	602832314	72	1	354	10 55 963 5	SWITCH CABINET X1
PATCH CORD	11222783	120	3	29	11 24 519 0	SUPERSTRUCTURE EL
PATCH CORD	11261378	121	3	29	11 24 519 0	SUPERSTRUCTURE EL
PC-BOARD PLATE 1	917585714	51	1	354	10 55 963 5	SWITCH CABINET X1
PEDESTAL	10512048	101	1	367	10 35 250 8	CABIN
PEDESTAL	10512061	89	1	367	10 35 250 8	CABIN
PEDESTAL	11245755	1	2	623	11 24 147 8	UC PLATFORM

Description	Item	Pos.	Quantity	Sheet	Assembly	Description
PEDESTAL	992671814	1	2	421	99 23 389 14	UC PLATFORM
PENDULUM	990627014	23	1	515	10 59 863 3	PENDULUM CPL
PENDULUM CPL	10598633	1	1	514	99 06 461 14	ANEMOMETER CPL
PERFORATED PLATE	10135441	2	1	182	10 14 861 5	OIL SUMP PRE-ASS.
PERFORATED PLATE	10565879	10	1	296	10 56 580 8	DOOR
PERFORATED PLATE	10566239	12	1	295	10 56 623 7	DOOR
PERFORATED PLATE	10578841	12	1	290	10 57 883 5	DOOR
PERFORATED PLATE	10578971	10	1	292	10 57 897 6	DOOR
PERFORATED PLATE	10579423	12	1	294	10 57 940 0	DOOR
PERFORATED PLATE	11290846	165	2	78	11 24 682 0	DISTRIBUTOR GEARBOX
PILOT CONTROLLED CHECK	510466114	2	1	689	10 51 728 1	TUBING HYDR
PIN	10115230	11	1	399	11 22 473 8	ADJUSTMENT
PIN	10529084	15	1	686	10 58 064 7	VIDEO MONITORING SYSTEM
PIN	10529086	16	1	686	10 58 064 7	VIDEO MONITORING SYSTEM
PIN	10572058	25	4	665	11 89 568 6	SELF-LOADING SYSTEM RFK
PIN	10574630	1	1	433	10 57 462 9	PIN CPL
PIN	11215962	4	1	570	11 28 774 6	MOUNTING PARTS
PIN	11240009	98	3	451	11 23 820 3	PIVOT PIECE CPL
PIN	11250329	30	4	164	11 24 113 8	MOTOR BEARING CPL
PIN	11271461	4	1	593	79 04 871 14	BOTTOM HOOK BLOCK
PIN	11301479	42	1	58	10 58 163 4	CABIN SUSPENSION CPL
PIN	11493575	4	1	586	79 04 112 14	BOTTOM HOOK BLOCK
PIN	592291514	1	1	376	59 22 914 14	PLATFORM FIXATION CPL
PIN	602331114	112	4	697	10 56 427 9	WIRING HARNESS
PIN	9477439	13	2	97	10 11 835 0	CONNECTION HOUSING
PIN	950290614	10	1	529	11 29 649 2	PIN CPL
PIN	950387314	59	10	621	10 55 372 1	ROOF RAILING RFK
PIN	950735914	18	1	582	99 38 329 14	TIP BOOM CPL
PIN	956067614	3	1	577	99 48 521 14	TIP BOOM CPL
PIN	956070214	9	1	577	99 48 521 14	TIP BOOM CPL
PIN	956374714	31	2	582	99 38 329 14	TIP BOOM CPL
PIN	956536214	37	2	633	10 51 176 9	NEEDLE BOOM CPL
PIN	956711314	23	8	644	10 51 971 3	SELF-LOADING SYSTEM RFK
PIN	956802414	13	1	521	99 23 398 14	ROLLER SET
PIN	956802514	14	1	521	99 23 398 14	ROLLER SET
PIN	956859714	4	4	639	99 23 405 14	INTERMEDIATE TENSIONING
PIN	957104814	39	1	633	10 51 176 9	NEEDLE BOOM CPL
PIN	957563914	15	2	544	10 53 145 5	TILTING-BACK SUPPORT NEE
PIN	959483514	3	1	570	11 28 774 6	MOUNTING PARTS
PIN	959643514	11	4	512	11 28 629 9	MOUNTING PARTS
PIN	959866614	7	1	329	99 29 258 14	LUG SHEAVE SET
PIN	959912614	16	6	309	99 29 803 14	LASHING BALLAST
PIN	966429214	28	1	582	99 38 329 14	TIP BOOM CPL
PIN	968523914	27	1	58	10 58 163 4	CABIN SUSPENSION CPL
PIN	970883003	27	2	302	11 24 483 7	MOUNTING PARTS SUPERST
PIN	9888133	19	1	104	10 13 975 2	REPAIR SET SWIVEL YOKE
PIN 100X1606 LHRD900-40;100	11239740	22	1	473	11 24 444 4	A-FRAME 1 CPL
PIN 110X198 LHRD900-40;100	959912214	13	6	309	99 29 803 14	LASHING BALLAST
PIN 115X200 LHRD900-40;100	949389914	12	2	473	11 24 444 4	A-FRAME 1 CPL
PIN 120X270 35NICRMOV125	959712214	1	2	63	99 23 451 14	PIVOT BOLT INSTALLATION
PIN 150X330	11230438	4	1	403	51 33 141 14	DOUBLE-ACTING CYL
PIN 30X46 LHRD750-30;10019	945877814	37	2	637	99 10 116 14	ROPE GUIDE
PIN 30X46 LHRD750-30;10019	945877814	3	1	640	99 10 125 14	FORK
PIN 30X46 LHRD750-30;10019	945877814	3	1	642	99 06 789 14	FORK
PIN 35X 120 LHRD750-30;10019	953305103	27	1	637	99 10 116 14	ROPE GUIDE
PIN 40X143 34CRNIMO6;EN 10	956929614	14	2	544	10 53 145 5	TILTING-BACK SUPPORT NEE
PIN 40X182 LHRD900-40;10019	10351894	11	4	311	10 51 969 7	NEEDLE LUFFING WINCH
PIN 48X58 LHRD900-40;10019	485568414	38	2	637	99 10 116 14	ROPE GUIDE
PIN 50X138 LHRD900-40;10019	10534039	13	4	64	10 51 969 4	A-FRAME ERECTION CYL INST
PIN 50X157 LHRD900-40;10019	956847814	2	2	513	11 28 610 5	RETAINING DEVICE CPL

Description	Item	Pos.	Quantity	Sheet	Assembly	Description
PIN 50X95 LHRD750-30;10019	956047514	11	2	388	99 18 041 14	LASHING SUPERSTRUCTURE
PIN 53X67 LHRD900-40;10019	10550993	12	2	512	11 28 629 9	MOUNTING PARTS
PIN 53X82 LHRD900-40;10019	949946714	13	2	512	11 28 629 9	MOUNTING PARTS
PIN 55X85X66 LHRD900-40;100	945931614	20	4	535	99 26 359 14	ANCHORING ROD CPL
PIN 55X92 LHRD900-40;10019	956215014	13	4	544	10 53 145 5	TILTING-BACK SUPPORT NEE
PIN 58X113 LHRD900-40;10019	949174814	26	2	577	99 48 521 14	TIP BOOM CPL
PIN 58X140 LHRD900-40;10019	957261514	14	1	582	99 38 329 14	TIP BOOM CPL
PIN 58X140 LHRD900-40;10019	957261514	41	1	633	10 51 176 9	NEEDLE BOOM CPL
PIN 58X95 LHRD900-40;10019	948959414	31	4	577	99 48 521 14	TIP BOOM CPL
PIN 60X110 LHRD750-30;10019	950663614	17	2	64	10 51 969 4	A-FRAME ERECTION CYL INST
PIN 60X120 LHRD900-40;10019	942804914	10	2	577	99 48 521 14	TIP BOOM CPL
PIN 63X110 LHRD900-40;10019	949982414	23	2	535	99 26 359 14	ANCHORING ROD CPL
PIN 63X110 LHRD900-40;10019	949982414	20	2	571	99 26 362 14	ANCHORING ROD CPL
PIN 63X120 LHRD900-40;10019	949351814	5	4	641	99 23 420 14	INTERMEDIATE TENSIONING
PIN 63X120 LHRD900-40;10019	949351814	10	1	650	11 23 619 7	SELF-LOADING SYSTEM RFK
PIN 63X95 LHRD900-40;10019	949196614	3	4	493	91 85 910 14	ANCHORING ROD CPL
PIN 63X95 LHRD900-40;10019	949196614	3	4	501	91 85 911 14	ANCHORING ROD CPL
PIN 63X95 LHRD900-40;10019	949196614	3	8	507	99 03 609 14	ANCHORING ROD CPL
PIN 63X95 LHRD900-40;10019	949196614	22	8	535	99 26 359 14	ANCHORING ROD CPL
PIN 63X95 LHRD900-40;10019	949196614	15	4	542	10 59 968 1	ANCHORING ROD CPL
PIN 63X95 LHRD900-40;10019	949196614	16	8	571	99 26 362 14	ANCHORING ROD CPL
PIN 65X193 LHRD900-40;10019	957831614	10	4	308	10 52 656 0	MOUNTING PARTS
PIN 65X284 LHRD900-40;10019	949886314	10	1	528	11 28 852 3	PIN CPL
PIN 65X284 LHRD900-40;10019	949886314	33	4	633	10 51 176 9	NEEDLE BOOM CPL
PIN 68X105 LHRD750-30;10019	948545514	39	2	637	99 10 116 14	ROPE GUIDE
PIN 68X105 LHRD900-40;10019	942976214	21	2	535	99 26 359 14	ANCHORING ROD CPL
PIN 68X105 LHRD900-40;10019	942976214	21	2	571	99 26 362 14	ANCHORING ROD CPL
PIN 68X115 LHRD900-40;10019	950365014	16	4	542	10 59 968 1	ANCHORING ROD CPL
PIN 73X95 LHRD900-40;10019	959575714	12	4	460	99 30 060 14	ANCHORING ROD CPL
PIN 73X95 LHRD900-40;10019	959575714	12	4	492	99 24 404 14	ANCHORING ROD CPL
PIN 73X95 LHRD900-40;10019	959575714	12	4	500	99 24 405 14	ANCHORING ROD CPL
PIN 73X95 LHRD900-40;10019	959575714	12	8	506	99 24 406 14	ANCHORING ROD CPL
PIN 73X95 LHRD900-40;10019	959575714	12	4	519	99 24 594 14	ANCHORING ROD CPL
PIN 73X95 LHRD900-40;10019	959575714	39	2	582	99 38 329 14	TIP BOOM CPL
PIN 75X125 LHRD900-40;10019	957896414	17	4	542	10 59 968 1	ANCHORING ROD CPL
PIN 75X240 LHRD900-40;10019	959912114	12	6	309	99 29 803 14	LASHING BALLAST
PIN 80X371 LHRD900-40;10019	950581614	11	4	450	11 23 820 3	PIVOT PIECE CPL
PIN 80X371 LHRD900-40;10019	950581614	10	1	483	11 28 726 4	PIN CPL
PIN 83X131 LHRD900-40;10019	959921514	12	8	476	99 26 417 14	ANCHORING ROD CPL
PIN 83X131 LHRD900-40;10019	959921514	17	4	519	99 24 594 14	ANCHORING ROD CPL
PIN 90X1022.5 LHRD900-40;100	10349222	33	1	541	11 29 938 4	MOUNTING PARTS
PIN 90X1079.5 LHRD900-40;100	10349125	1	1	533	11 29 426 7	MOUNTING PARTS
PIN 90X205 LHRD900-40;10019	10349207	10	1	527	11 29 648 5	PIN CPL
PIN CONTACT	605619814	53	6	566	10 57 624 5	CABLE LOOM
PIN CONTACT	6905271	13	2	712	10 52 957 6	REFUELLING PUMP CPL
PIN CPL	10574629	11	4	424	11 22 050 0	WINCHES INSTALLATION
PIN CPL	10574629	11	4	439	11 22 050 1	WINCHES INSTALLATION
PIN CPL	11262110	13	4	671	11 89 568 8	SELF-LOADING SYSTEM RFK
PIN CPL	11287264	11	4	482	11 24 570 3	BOOM INTERMEDIATE SECTIO
PIN CPL	11287264	11	4	498	11 24 570 9	BOOM INTERMEDIATE SECTIO
PIN CPL	11287264	11	4	504	11 24 571 5	BOOM INTERMEDIATE SECTIO
PIN CPL	11288523	13	4	525	11 24 336 5	PIVOT PIECE NEEDLE CPL
PIN CPL	11288523	11	4	552	11 24 084 8	BOOM INTERMEDIATE SECTIO
PIN CPL	11288523	11	4	559	11 24 162 5	BOOM INTERMEDIATE SECTIO
PIN CPL	11288523	11	4	562	11 24 163 0	BOOM INTERMEDIATE SECTIO
PIN CPL	11296485	12	2	525	11 24 336 5	PIVOT PIECE NEEDLE CPL
PIN CPL	11296492	14	2	525	11 24 336 5	PIVOT PIECE NEEDLE CPL
PIN CPL	959835714	14	4	671	11 89 568 8	SELF-LOADING SYSTEM RFK
PIN CPL	992921714	29	2	408	10 55 876 0	CRAWLER CARRIER RIGHT CP
PIN CPL	992921714	29	2	417	10 55 876 1	CRAWLER CARRIER LEFT CP

Description	Item	Pos.	Quantity	Sheet	Assembly	Description
PIN DIN 1435-B 35H11X90X80	453050914	5	12	639	99 23 405 14	INTERMEDIATE TENSIONING
PIN DIN 1435-B 35H11X90X80	453050914	4	12	641	99 23 420 14	INTERMEDIATE TENSIONING
PIN DIN 1435-B 35H11X90X80	453050914	5	14	643	97 05 997 03	INTERMEDIATE TENSIONING
PIN DIN EN 22340-B 25F7X120	485501714	23	2	58	10 58 163 4	CABIN SUSPENSION CPL
PIN DIN EN 22340-B 25F8X88	450052114	30	2	58	10 58 163 4	CABIN SUSPENSION CPL
PIN DIN EN 22340-B 25F8X88	450052114	2	2	63	99 23 451 14	PIVOT BOLT INSTALLATION
PIN DIN EN 22341-B 40H11X11	451436614	13	1	58	10 58 163 4	CABIN SUSPENSION CPL
PIN DIN EN 22341-B 50H11X110	485519214	19	1	650	11 23 619 7	SELF-LOADING SYSTEM RFK
PIN DIN EN 22341-B 80H11X160	485518914	19	2	644	10 51 971 3	SELF-LOADING SYSTEM RFK
PIN EN 10060 28X220X192 X20	942594714	26	2	637	99 10 116 14	ROPE GUIDE
PIN EN 10278 20X144 S355J2	958214314	2	1	516	11 28 357 6	MOUNTING PARTS
PIN M12X1.5 NIROSTA	10227129	9	1	457	61 61 541 14	CABLE DRUM
PIN RD20X394 LHRD750-30;100	10501796	2	1	414	10 50 179 5	ACCESS CPL
PIN RD20X54 ST 37 K	956247414	36	1	633	10 51 176 9	NEEDLE BOOM CPL
PIN RD68X175 LHRD900-40;100	959799614	27	8	644	10 51 971 3	SELF-LOADING SYSTEM RFK
PIN X	9477429	18	1	104	10 13 975 2	REPAIR SET SWIVEL YOKE
PINION GUARD	10099140	16	2	341	10 51 968 2	SG SUPERSTRUCTURE
PINION GUARD	10227120	13	1	705	11 26 771 6	MOUNTING PARTS
PIPE CLAMP	10579877	7	1	689	10 51 728 1	TUBING HYDR
PIPE CLAMP	11290856	530	1	78	11 24 682 0	DISTRIBUTOR GEARBOX
PIPE CLAMP	9077164	14	1	238	10 14 622 4	CYCLE VALVE
PIPE SET	10227437	30	1	650	11 23 619 7	SELF-LOADING SYSTEM RFK
PIPE SET	10588224	10	1	689	10 51 728 1	TUBING HYDR
PIPELINE	10132170	3	1	217	10 14 588 5	LEAK OIL RETURN LINE
PIPELINE	10132180	20	1	217	10 14 588 5	LEAK OIL RETURN LINE
PIPELINE	10141986	4	1	216	10 14 333 9	FUEL LINES
PIPELINE	10141988	1	1	216	10 14 333 9	FUEL LINES
PIPELINE	10141989	2	1	216	10 14 333 9	FUEL LINES
PIPELINE	10142006	8	1	217	10 14 588 5	LEAK OIL RETURN LINE
PIPELINE	10142080	3	1	216	10 14 333 9	FUEL LINES
PIPELINE	10143235	1	1	217	10 14 588 5	LEAK OIL RETURN LINE
PIPELINE	10143819	20	1	237	10 14 511 2	EXHAUST NOZZLE ATTACHM
PIPELINE	10145889	13	1	217	10 14 588 5	LEAK OIL RETURN LINE
PIPELINE	10145914	12	1	237	10 14 511 2	EXHAUST NOZZLE ATTACHM
PIPELINE	10146838	4	1	238	10 14 622 4	CYCLE VALVE
PIPELINE	10146839	5	1	238	10 14 622 4	CYCLE VALVE
PIPELINE	10146840	6	1	238	10 14 622 4	CYCLE VALVE
PIPELINE	10147368	2	1	221	10 14 736 9	INTAKE STACK ASSEMBLY
PIPELINE	10149699	1	1	231	10 14 821 7	PIPELINE INSTALLATION
PIPELINE INSTALLATION	10139539	7	1	181	10 14 844 4	OIL SUMP WITH FASTENING
PIPELINE INSTALLATION	10148217	381	1	172	10 14 032 7	DIESEL ENGINE
PISTON	10129500	1	1	201	10 12 949 9	FINAL CONTROL VALVE
PISTON	10143510	1	1	190	10 14 351 1	PISTON CPL.
PISTON	10149655	1	1	176	10 13 845 0	FINAL CONTROL VALVE
PISTON	11226017	30	1	346	51 14 347 14	SG SAFETY BLOCK
PISTON	9886591	6	1	200	10 12 948 0	OIL COOLER, PRE-ASSEMBLE
PISTON BOLT 16MNCR5	10282849	6	1	190	10 14 351 1	PISTON CPL.
PISTON COOLING	10142749	15	6	171	10 14 032 7	DIESEL ENGINE
PISTON COOLING NOZZLE	10151636	1	1	178	10 15 163 4	PISTON COOLING PRE-ASS.
PISTON COOLING PRE-ASS.	10151634	1	1	177	10 14 274 9	PISTON COOLING
PISTON CPL.	10143511	70	6	171	10 14 032 7	DIESEL ENGINE
PISTON PACKING SET	10352353	80	1	669	59 21 826 14	SUPPORT CYL
PISTON PACKING SET	10352357	115	1	669	59 21 826 14	SUPPORT CYL
PISTON RING MG	10140968	4	1	190	10 14 351 1	PISTON CPL.
PISTON ROD	11897433	5	1	548	59 21 280 14	SINGLE-ACTING CYL
PISTON TYPE ACCUMULATOR	592128514	8	1	547	10 53 146 1	TUBING HYDR
PIVOT BOLT INSTALLATION	992345114	50	1	6	11 24 047 9	SUPERSTRUCTURE CPL
PIVOT HEAD	513319614	13	1	23	51 33 139 14	DOUBLE-ACTING CYL
PIVOT PIECE CPL	11238203	59	1	2	01 38 281 14	LR 1300 SX
PIVOT PIECE EL	10530446	3	1	448	11 23 820 3	PIVOT PIECE CPL

Description	Item	Pos.	Quantity	Sheet	Assembly	Description
PIVOT PIECE EL	10531409	3	1	525	11 24 336 5	PIVOT PIECE NEEDLE CPL
PIVOT PIECE HYDR	10518261	2	1	448	11 23 820 3	PIVOT PIECE CPL
PIVOT PIECE NEEDLE CPL	11243365	10	1	523	11 24 618 2	NEEDLE ADD-ON PARTS
PL LATCH	10348527	13	1	584	79 03 862 14	LOAD HOOK
PL LATCH	10348635	134	1	3	01 38 281 14	LR 1300 SX
PL LATCH	10501398	138	2	3	01 38 281 14	LR 1300 SX
PLAIN COMPRESSION RING	10472425	109	18	10	11 29 618 6	SUPERSTRUCTURE HYDR
PLAIN COMPRESSION RING	10472425	70	3	75	11 24 773 5	HYDR POWER UNIT
PLAIN COMPRESSION RING	10472425	616	2	321	10 51 968 7	MAIN LUG HYDR
PLAIN COMPRESSION RING	10472425	631	10	394	11 25 903 1	TUBING HYDR
PLAIN COMPRESSION RING	10472425	740	5	435	11 26 260 6	WINCH 1 HYDR
PLAIN COMPRESSION RING	10472425	740	5	441	11 26 261 1	WINCH 2 HYDR
PLAIN COMPRESSION RING	10490781	110	19	10	11 29 618 6	SUPERSTRUCTURE HYDR
PLAIN COMPRESSION RING	10490781	72	2	75	11 24 773 5	HYDR POWER UNIT
PLAIN COMPRESSION RING	10490781	612	2	312	10 51 969 8	NEEDLE LUFFING WINCH HYD
PLAIN COMPRESSION RING	10490781	641	2	344	10 55 216 1	TUBING HYDR
PLAIN COMPRESSION RING	10490784	106	4	10	11 29 618 6	SUPERSTRUCTURE HYDR
PLAIN COMPRESSION RING	10490784	71	13	75	11 24 773 5	HYDR POWER UNIT
PLAIN COMPRESSION RING	10490784	640	4	344	10 55 216 1	TUBING HYDR
PLAIN COMPRESSION RING	10490784	660	1	465	10 51 959 1	TUBING HYDR
PLAIN COMPRESSION RING	10490784	615	1	652	10 51 973 8	SELF-LOADING SYSTEM HYD
PLAIN COMPRESSION RING	10490785	107	4	10	11 29 618 6	SUPERSTRUCTURE HYDR
PLAIN COMPRESSION RING	10490787	108	5	10	11 29 618 6	SUPERSTRUCTURE HYDR
PLANET WHEEL	540270614	12	3	613	54 02 701 14	PLANETARY STAGE
PLANET WHEEL	540271014	22	3	613	54 02 701 14	PLANETARY STAGE
PLANET WHEEL	944404303	18	5	412	96 93 178 01	TRACTION DRIVE
PLANET WHEEL	944404803	28	3	412	96 93 178 01	TRACTION DRIVE
PLANET WHEEL	944406503	38	3	412	96 93 178 01	TRACTION DRIVE
PLANET WHEEL	944434703	48	3	412	96 93 178 01	TRACTION DRIVE
PLANETARY CARRIER	540271314	27	1	613	54 02 701 14	PLANETARY STAGE
PLANETARY CARRIER	540272514	1	1	616	54 02 704 14	POWER TAKE-OFF CPL
PLANETARY CARRIER	944403903	15	1	412	96 93 178 01	TRACTION DRIVE
PLANETARY CARRIER	944404603	25	1	412	96 93 178 01	TRACTION DRIVE
PLANETARY CARRIER	944406403	35	1	412	96 93 178 01	TRACTION DRIVE
PLANETARY CARRIER	969392201	45	1	412	96 93 178 01	TRACTION DRIVE
PLANETARY STAGE	11893250	2	1	427	11 89 322 8	REPAIR KIT
PLANETARY STAGE	11893252	4	1	427	11 89 322 8	REPAIR KIT
PLANETARY STAGE	540270114	1	1	612	59 20 694 14	WINCH
PLANETARY WHEEL AXLE	540271414	28	3	613	54 02 701 14	PLANETARY STAGE
PLANETARY WHEEL AXLE	540272614	2	3	616	54 02 704 14	POWER TAKE-OFF CPL
PLATE	10142763	2	1	233	10 14 274 4	COOLING WATER AIR BLEED
PLATE	10529071	11	1	686	10 58 064 7	VIDEO MONITORING SYSTEM
PLATE	10529074	12	1	686	10 58 064 7	VIDEO MONITORING SYSTEM
PLATE	10574357	19	2	288	11 24 409 1	COVERS
PLATE	10581590	21	1	288	11 24 409 1	COVERS
PLATE	11217232	18	4	282	11 24 409 0	PANELLING SUPERSTR. INSTA
PLATE	11271486	16	4	593	79 04 871 14	BOTTOM HOOK BLOCK
PLATE	11271972	12	2	554	11 28 979 0	GRATING CARRIER
PLATE	11271973	11	1	554	11 28 979 0	GRATING CARRIER
PLATE	11274636	16	4	586	79 04 112 14	BOTTOM HOOK BLOCK
PLATE	11310952	12	2	485	11 28 390 8	BOOM ACCESS
PLATE	11310952	12	2	499	11 28 583 8	BOOM ACCESS
PLATE	11310952	12	2	505	11 28 626 1	BOOM ACCESS
PLATE	11311241	10	1	485	11 28 390 8	BOOM ACCESS
PLATE	11311241	10	1	499	11 28 583 8	BOOM ACCESS
PLATE	11311241	10	1	505	11 28 626 1	BOOM ACCESS
PLATE	11311262	11	1	485	11 28 390 8	BOOM ACCESS
PLATE	11311336	11	1	499	11 28 583 8	BOOM ACCESS
PLATE	11311393	11	1	505	11 28 626 1	BOOM ACCESS
PLATE	950102914	16	1	522	99 30 800 14	HOIST LIMIT SWITCH INSTAL.

Description	Item	Pos.	Quantity	Sheet	Assembly	Description
PLATE	950143914	37	2	521	99 23 398 14	ROLLER SET
PLATE	950161014	6	2	533	11 29 426 7	MOUNTING PARTS
PLATE	950285614	11	1	527	11 29 648 5	PIN CPL
PLATE	950287214	7	1	533	11 29 426 7	MOUNTING PARTS
PLATE	950562214	10	2	537	99 35 031 14	ROPE GUARD CPL
PLATE	954432003	17	10	424	11 22 050 0	WINCHES INSTALLATION
PLATE	954432003	17	10	439	11 22 050 1	WINCHES INSTALLATION
PLATE	954486503	18	6	424	11 22 050 0	WINCHES INSTALLATION
PLATE	954486503	18	6	439	11 22 050 1	WINCHES INSTALLATION
PLATE	971363403	93	1	451	11 23 820 3	PIVOT PIECE CPL
PLATFORM FIXATION CPL	592291414	116	1	367	10 35 250 8	CABIN
PLUG	10447747	2	4	402	10 55 154 8	QUICK RELEASE FITTING
PLUG	10447747	2	6	454	10 55 157 6	QUICK RELEASE FITTING
PLUG	11247913	1	4	404	10 55 119 1	LID CPL
PLUG	605253314	201	11	354	10 55 963 5	SWITCH CABINET X1
PLUG	605253414	211	1	354	10 55 963 5	SWITCH CABINET X1
PLUG	605254114	213	1	354	10 55 963 5	SWITCH CABINET X1
PLUG	605254214	203	11	354	10 55 963 5	SWITCH CABINET X1
PLUG	605260114	1000	1	568	99 38 560 14	CABLE
PLUG	605264814	51	3	351	11 27 973 6	CABIN EL
PLUG	693013014	11	1	712	10 52 957 6	REFUELLING PUMP CPL
PLUG	950490414	11	1	487	11 28 397 7	SUMP PAN CPL
PLUG	950490414	11	1	488	11 28 397 8	SUMP PAN CPL
PLUG	970535203	42	2	633	10 51 176 9	NEEDLE BOOM CPL
PLUG	971230303	60	10	621	10 55 372 1	ROOF RAILING RFK
PLUG	993352014	53	8	621	10 55 372 1	ROOF RAILING RFK
PLUG COUPLING	10678754	23	2	275	11 24 114 5	ASSEMBLY INSTAL.
PLUG COUPLING	11082454	22	2	275	11 24 114 5	ASSEMBLY INSTAL.
PLUG COUPLING	11482007	25	4	275	11 24 114 5	ASSEMBLY INSTAL.
PLUG INSERT	605616014	36	2	628	99 24 978 14	BOOM ELECTRICS
PLUG-IN PIPE	10125386	6	1	181	10 14 844 4	OIL SUMP WITH FASTENING
PLUG-IN SLEEVE	10871759	21	4	275	11 24 114 5	ASSEMBLY INSTAL.
PNEUMATIC SPRING	10289982	51	1	694	10 28 999 2	VIBRATING SYSTEM
POCKET LOCK	11236233	11	1	676	11 23 626 6	ROPE MOUNTING RFK
POCKET LOCK	773941308	11	1	317	99 23 387 14	ROPES LUG NEEDLE BOOM
POWER TAKE-OFF CPL	540270414	23	1	612	59 20 694 14	WINCH
POWER UNIT SUPPORT ATT	10147686	12	1	171	10 14 032 7	DIESEL ENGINE
PRESETTING TIMER	6905461	20	1	602	11 26 652 6	AUXILIARY HEATING EL RFK
PRESSURE ADAPTER	10131081	1	1	210	10 13 508 0	PRESSURE ADAPTER
PRESSURE ADAPTER	10135080	1	1	209	10 14 114 0	RK PRESSURE ADAPTER
PRESSURE ADAPTER	10153151	191	6	171	10 14 032 7	DIESEL ENGINE
PRESSURE ADAPTER FASTEN	10135434	193	6	172	10 14 032 7	DIESEL ENGINE
PRESSURE CONTROL VALVE	10115241	49	1	399	11 22 473 8	ADJUSTMENT
PRESSURE FEEDER VALVE	10123236	2	2	128	10 14 131 7	REPAIR KIT CONNECTING PL
PRESSURE FEEDER VALVE	10135472	10	1	118	10 12 942 0	PRESSURE REDUCTION VALV
PRESSURE FILTER	10223581	19	1	75	11 24 773 5	HYDR POWER UNIT
PRESSURE GAUGE	750001114	7	1	444	10 56 183 8	TOOL
PRESSURE GAUGE	750001414	11	1	547	10 53 146 1	TUBING HYDR
PRESSURE GAUGE	750003414	8	1	444	10 56 183 8	TOOL
PRESSURE GAUGE CONNECT	7363730	9	2	444	10 56 183 8	TOOL
PRESSURE LIMITING VALVE	10350546	2	1	68	10 22 540 8	VALVE BLOCK
PRESSURE LIMITING VALVE	10593474	3	1	84	11 21 991 0	PUMP HOUSING
PRESSURE LIMITING VALVE	11219368	2	1	84	11 21 991 0	PUMP HOUSING
PRESSURE LIMITING VALVE	11233731	5	1	68	10 22 540 8	VALVE BLOCK
PRESSURE LIMITING VALVE	11233731	6	1	68	10 22 540 8	VALVE BLOCK
PRESSURE LIMITING VALVE	11233731	2	1	467	59 20 224 14	LOAD HOLDING VALVE
PRESSURE LIMITING VALVE	11293250	3	2	21	59 21 458 14	VALVE BLOCK
PRESSURE LIMITING VALVE	511414514	18	1	75	11 24 773 5	HYDR POWER UNIT
PRESSURE LIMITING VALVE	511467914	4	1	608	10 51 726 2	TUBING HYDR
PRESSURE LIMITING VALVE	511475514	7	1	465	10 51 959 1	TUBING HYDR

Description	Item	Pos.	Quantity	Sheet	Assembly	Description
PRESSURE LIMITING VALVE	511619614	50	2	313	51 22 527 14	OIL MOTOR
PRESSURE LIMITING VALVE	511639114	6	1	547	10 53 146 1	TUBING HYDR
PRESSURE LIMITING VALVE	511639714	50	2	322	51 22 942 14	OIL MOTOR
PRESSURE LIMITING VALVE	511655114	50	2	399	11 22 473 8	ADJUSTMENT
PRESSURE LIMITING VALVE	592323114	5	4	392	11 25 903 1	TUBING HYDR
PRESSURE PIN	10101458	3	3	147	11 49 032 3	CYLINDER
PRESSURE REDUCTION VALV	10129420	9	2	117	10 14 131 8	REGULATING VALVE
PRESSURE REDUCTION VALV	510438514	4	2	392	11 25 903 1	TUBING HYDR
PRESSURE REDUCTION VALV	511476914	3	1	312	10 51 969 8	NEEDLE LUFFING WINCH HYD
PRESSURE REDUCTION VALV	511476914	4	1	321	10 51 968 7	MAIN LUG HYDR
PRESSURE SENSOR	10515473	66	2	29	11 24 519 0	SUPERSTRUCTURE EL
PRESSURE SENSOR	11219179	65	2	29	11 24 519 0	SUPERSTRUCTURE EL
PRESSURE SENSOR	693126214	11	2	526	10 53 140 9	PIVOT PIECE EL
PRESSURE SPRING	10115224	6	1	399	11 22 473 8	ADJUSTMENT
PRESSURE SPRING	10129501	6	1	201	10 12 949 9	FINAL CONTROL VALVE
PRESSURE SPRING	10529089	17	1	686	10 58 064 7	VIDEO MONITORING SYSTEM
PRESSURE SPRING	11118160	6	1	176	10 13 845 0	FINAL CONTROL VALVE
PRESSURE SPRING	11226019	40	1	346	51 14 347 14	SG SAFETY BLOCK
PRESSURE SPRING	11267416	6	1	87	10 59 347 4	PRESSURE LIMITING VALVE
PRESSURE SPRING	11267442	5	1	89	11 06 730 4	SHUTDOWN VALVE
PRESSURE SPRING	11305568	75	16	339	99 04 645 14	DRIVE
PRESSURE SPRING	11305579	76	16	339	99 04 645 14	DRIVE
PRESSURE SPRING	7028143	5	1	87	10 59 347 4	PRESSURE LIMITING VALVE
PRESSURE SPRING	7381699	30	21	123	10 13 802 6	RK CYL.+CONTROL PLATE+SH
PRESSURE SPRING	7382167	31	24	105	98 89 984	REPAIR KIT DRIVING MECHAN
PRESSURE SPRING	7382167	31	24	109	98 89 983	REPAIR KIT DRIVING MECHAN
PRESSURE SPRING	9074481	9	4	192	10 13 728 6	CYLINDER HEAD PRE-ASS.
PRESSURE SPRING	9267342	12	1	98	92 67 343	VENTILATION VALVE
PRESSURE SPRING	9886756	7	1	200	10 12 948 0	OIL COOLER, PRE-ASSEMBLE
PRESSURE SWITCH	10352111	16	1	44	10 56 070 1	TANK HYDR CPL
PRESSURE SWITCH	11236712	5	1	700	11 21 750 0	LIQUEFIER
PRESSURE SWITCH ON	10352119	12	1	435	11 26 260 6	WINCH 1 HYDR
PRESSURE SWITCH ON	10352119	12	1	441	11 26 261 1	WINCH 2 HYDR
PRESSURE TRANSMITTER	9076531	10	2	250	10 14 297 7	ENGINE CONTROL SENSORS
PRESSURE TRANSMITTER C	9076550	11	1	250	10 14 297 7	ENGINE CONTROL SENSORS
PRESSURE VALVE	11229183	5	1	17	10 35 148 6	VALVE BLOCK
PRESSURE VALVE	11229185	9	1	17	10 35 148 6	VALVE BLOCK
PRESSUREGAUGE DIRECTC	510694314	10	2	444	10 56 183 8	TOOL
PRESSUREGAUGE DIRECTC	510694314	12	3	547	10 53 146 1	TUBING HYDR
PROFIL CLAMP	10141051	4	1	269	10 14 404 9	SCR CPL.
PROFIL CLAMP	10494116	21	4	268	11 24 114 3	EXHAUST GAS SYSTEM
PROFIL CLAMP	10494117	22	2	268	11 24 114 3	EXHAUST GAS SYSTEM
PROFILE	592291114	97	1	367	10 35 250 8	CABIN
PROFILE CORD	501507014	13	1	614	54 02 702 14	ROPE DRUM CPL
PROFILE HOLLOW SHAFT	10350230	130	2	78	11 24 682 0	DISTRIBUTOR GEARBOX
PROFILE HOLLOW SHAFT	11253077	140	2	78	11 24 682 0	DISTRIBUTOR GEARBOX
PROFILE RING	477100208	26	3	275	11 24 114 5	ASSEMBLY INSTAL.
PROPORTIONAL MAGNET	11219375	2	2	93	11 21 991 7	CONTROL GEAR
PROTECTING CAP	10542325	96	1	352	11 27 973 6	CABIN EL
PROTECTING CAP	10801869	16	1	131	10 12 323 6	PRESSURE FEEDER VALVE
PROTECTING CAP	11266978	14	80	387	10 51 969 6	CONNECTION SUPERSTR UC
PROTECTING CAP	7013456	3	1	183	50 04 624	OIL DRAIN PLUG
PROTECTING CAP	779013014	31	2	633	10 51 176 9	NEEDLE BOOM CPL
PROTECTION GUARD	10580585	12	1	41	10 51 961 6	OIL COOLER INSTALLATION
PROTECTIVE CONDUCTOR T	10337303	50	1	708	10 56 013 7	MAINS SUPPLY BATTERY
PROXIMITY SWITCH	693067614	11	2	510	10 53 141 3	BOOM HEAD EL
PULL ROD	540272114	31	1	615	54 02 703 14	FLANGE CPL
PUMP	10144100	3	1	275	11 24 114 5	ASSEMBLY INSTAL.
PUMP COVER	11219350	4	1	79	10 53 430 7	V PUMP
PUMP ELEMENT	11215913	1	1	152	10 22 601 3	V PUMP

Description	Item	Pos.	Quantity	Sheet	Assembly	Description
PUMP ELEMENT	11215936	1	1	153	11 21 591 3	PUMP ELEMENT
PUMP ELEMENT	11221268	1	1	142	10 22 650 5	V PUMP
PUMP ELEMENT	11221274	1	1	143	11 22 126 8	PUMP ELEMENT
PUMP HOUSING	10132069	1	1	204	10 13 382 3	SUCTION PUMP PRE-ASS.
PUMP HOUSING	11219910	3	1	79	10 53 430 7	V PUMP
PUMP HOUSING	11219930	1	1	84	11 21 991 0	PUMP HOUSING
PUSH BUTTON	693003414	32	1	714	10 52 155 9	MODULE REFUELLING SYSTE
QUICK RELEASE FITTING	10445101	8	1	392	11 25 903 1	TUBING HYDR
QUICK RELEASE FITTING	10445102	7	1	392	11 25 903 1	TUBING HYDR
QUICK RELEASE FITTING	10445105	19	1	8	11 29 618 6	SUPERSTRUCTURE HYDR
QUICK RELEASE FITTING	10551548	9	2	392	11 25 903 1	TUBING HYDR
QUICK RELEASE FITTING	10551576	2	1	453	10 51 826 1	PIVOT PIECE HYDR
QUICK-FITTING THREAD COU	510571914	15	1	8	11 29 618 6	SUPERSTRUCTURE HYDR
QUICK-FITTING THREAD COU	510571914	9	1	465	10 51 959 1	TUBING HYDR
QUICK-FITTING THREAD COU	510572214	14	2	8	11 29 618 6	SUPERSTRUCTURE HYDR
QUICK-FITTING THREAD COU	510572214	8	1	465	10 51 959 1	TUBING HYDR
QUICK-FITTING THREAD COU	511511214	18	1	8	11 29 618 6	SUPERSTRUCTURE HYDR
QUICK-FITTING THREAD COU	511511314	17	1	8	11 29 618 6	SUPERSTRUCTURE HYDR
QUICK-FITTING THREAD COU	511704214	8	1	8	11 29 618 6	SUPERSTRUCTURE HYDR
QUICK-FITTING THREAD COU	511704314	2	1	445	91 90 239 14	CABLE HYDR
QUICK-FITTING THREAD COU	511708414	16	1	8	11 29 618 6	SUPERSTRUCTURE HYDR
RADIO RFK	10592569	14	1	2	01 38 281 14	LR 1300 SX
RAILING FOOT	10349402	19	10	619	10 55 372 1	ROOF RAILING RFK
RAILING ST.CONST.	10559163	18	2	619	10 55 372 1	ROOF RAILING RFK
RAILING ST.CONST.	10585923	10	1	619	10 55 372 1	ROOF RAILING RFK
RAILING ST.CONST.	10585924	11	1	619	10 55 372 1	ROOF RAILING RFK
RAILING ST.CONST.	10585925	12	1	619	10 55 372 1	ROOF RAILING RFK
RAILING ST.CONST.	10585926	13	1	619	10 55 372 1	ROOF RAILING RFK
REAR WINDOW	592289014	48	1	366	10 35 250 8	CABIN
RECEPTACLE	602209314	80	42	34	10 56 645 8	TERMINAL BOX
RECEPTACLE	602209314	80	3	568	99 38 560 14	CABLE
RECEPTACLE	602303214	73	1	34	10 56 645 8	TERMINAL BOX
REDUCER	260493402	33	1	578	97 14 959 03	HOIST LIMIT SWITCH EL
REDUCER	260493402	33	1	583	91 95 871 14	HOIST LIMIT SWITCH EL
REDUCER	260493402	33	1	634	10 51 167 1	LIMIT SWITCH EL
REDUCER	602620201	84	2	566	10 57 624 5	CABLE LOOM
REDUCER	602620201	38	2	628	99 24 978 14	BOOM ELECTRICS
REDUCING PIECE	602604314	56	1	715	10 52 155 9	MODULE REFUELLING SYSTE
REDUCING STUD	11290857	540	1	78	11 24 682 0	DISTRIBUTOR GEARBOX
REFUEL PUMP	510095914	10	1	712	10 52 957 6	REFUELLING PUMP CPL
REFUELLING PUMP CPL	10529576	10	1	710	10 52 155 4	REFUELLING SYSTEM RFK
REFUELLING SYSTEM RFK	10521554	858	1	4	01 38 281 14	LR 1300 SX
REGULATING VALVE	10127478	7	1	116	10 12 878 7	V PUMP
REGULATING VALVE	10127479	10	1	120	10 12 747 8	REGULATING VALVE
REGULATING VALVE	10141318	4	1	116	10 12 878 7	V PUMP
REGULATING VALVE	9074418	4	2	95	10 11 834 9	DOUBLE V-PUMP
REGULATION REPAIR KIT	10122262	85	1	116	10 12 878 7	V PUMP
REINFORCING PLATE	10350084	11	4	461	99 34 198 14	LIEBHERR SIGN
RELAY	10226635	21	1	160	11 24 448 7	CENTRAL POWER UNIT EL
RELAY	6202973	53	1	694	10 28 999 2	VIBRATING SYSTEM
RELAY	630160214	41	2	714	10 52 155 9	MODULE REFUELLING SYSTE
RELAY SOCKET	630122908	84	1	354	10 55 963 5	SWITCH CABINET X1
REPAIR KIT	10289984	100	1	692	10 04 363 3	DRIVERS SEAT AIR-SUSPEN
REPAIR KIT	11231317	3	1	427	11 89 322 8	REPAIR KIT
REPAIR KIT	11231319	5	1	427	11 89 322 8	REPAIR KIT
REPAIR KIT	11231322	1	1	428	11 23 126 9	ROPE DRUM
REPAIR KIT	11231336	1	1	429	11 23 127 0	FLANGE BEARING
REPAIR KIT	11233487	1	1	427	11 89 322 8	REPAIR KIT
REPAIR KIT	11253394	1	1	325	10 58 386 4	FLANGE
REPAIR KIT	11253398	1	1	326	10 55 597 3	ROPE DRUM

Description	Item	Pos.	Quantity	Sheet	Assembly	Description
REPAIR KIT	11253401	1	1	327	10 58 386 5	GEARBOX
REPAIR KIT	11253440	1	1	328	10 58 384 5	OIL LINE
REPAIR KIT	11893228	1	1	426	11 89 321 3	GEARBOX
REPAIR KIT	11893254	1	1	431	11 89 321 5	WINCH TRESTLE
REPAIR KIT	11893255	1	1	432	11 89 321 6	OIL LINE
REPAIR KIT CONNECTING PL	10141317	83	1	116	10 12 878 7	V PUMP
REPAIR KIT CONNECTION HO	10118357	90	1	97	10 11 835 0	CONNECTION HOUSING
REPAIR KIT DRIVING MECHAN	10138025	81	1	116	10 12 878 7	V PUMP
REPAIR KIT DRIVING MECHAN	9889983	94	1	96	10 11 834 9	DOUBLE V-PUMP
REPAIR KIT DRIVING MECHAN	9889984	92	1	95	10 11 834 9	DOUBLE V-PUMP
REPAIR KIT LEVER	10122245	7	1	122	10 13 802 5	REPAIR KIT DRIVING MECHAN
REPAIR KIT LOCK RING	10138032	84	1	116	10 12 878 7	V PUMP
REPAIR KIT LOCK RING	10138032	6	1	134	10 13 803 3	SEAL KIT CPL.
REPAIR KIT LOCK RING	9268016	96	1	96	10 11 834 9	DOUBLE V-PUMP
REPAIR KIT LOCK RING	9268016	96	1	114	92 76 408	SEAL KIT DOUBLE PUMP
REPAIR KIT MAGNET	9273187	97	1	96	10 11 834 9	DOUBLE V-PUMP
REPAIR KIT SHAFT	10138027	1	1	123	10 13 802 6	RK CYL.+CONTROL PLATE+SH
REPAIR KIT SHAFT	9884402	95	1	96	10 11 834 9	DOUBLE V-PUMP
REPAIR KIT SHAFT	9889977	93	1	95	10 11 834 9	DOUBLE V-PUMP
REPAIR SET DRIVE	10153606	180	1	171	10 14 032 7	DIESEL ENGINE
REPAIR SET DRIVE	11893253	1	1	430	11 89 321 4	DRIVE
REPAIR SET LID	9275443	85	1	95	10 11 834 9	DOUBLE V-PUMP
REPAIR SET SWIVEL BEARIN	10143607	6	1	122	10 13 802 5	REPAIR KIT DRIVING MECHAN
REPAIR SET SWIVEL YOKE	10122246	8	1	122	10 13 802 5	REPAIR KIT DRIVING MECHAN
REPAIR SET SWIVEL YOKE	10139752	84	1	95	10 11 834 9	DOUBLE V-PUMP
RESERVE FUSES	992081114	56	1	354	10 55 963 5	SWITCH CABINET X1
REST	10349600	6	2	550	99 31 679 14	SUPPORT SYSTEM CPL
RESTRICTOR BODY	11253687	2	1	75	11 24 773 5	HYDR POWER UNIT
RESTRICTOR BODY	11253689	26	2	75	11 24 773 5	HYDR POWER UNIT
RESTRICTOR BODY	917906414	3	1	674	10 55 459 4	TUBING HYDR
RESTRICTOR BODY	917906414	4	1	689	10 51 728 1	TUBING HYDR
RESTRICTOR BODY	929796914	6	1	608	10 51 726 2	TUBING HYDR
RESTRICTOR BODY	946293614	9	1	8	11 29 618 6	SUPERSTRUCTURE HYDR
RESTRICTOR BODY	991487414	26	1	8	11 29 618 6	SUPERSTRUCTURE HYDR
RESTRICTOR BODY	991867414	37	1	8	11 29 618 6	SUPERSTRUCTURE HYDR
RESTRICTOR VALVE	592178314	5	1	652	10 51 973 8	SELF-LOADING SYSTEM HYD
RETAINER CLIP	10122841	2	1	232	10 14 274 2	COOLANT PIPE BEND ADD-ON
RETAINER CLIP	10127984	2	1	222	10 14 736 4	AIR INTAKE ASSEMBLY
RETAINER CLIP	10127984	30	9	261	11 24 114 1	COOLER INSTALLATION CHA
RETAINER CLIP	10132073	10	4	235	10 14 144 3	EXHAUST PIPE PRE-ASS.
RETAINER CLIP	10138820	3	1	230	10 14 821 5	THERMOSTAT HOUSING ASS
RETAINER CLIP	10138820	4	1	237	10 14 511 2	EXHAUST NOZZLE ATTACHM
RETAINER HOUSING	605127914	1000	2	697	10 56 427 9	WIRING HARNESS
RETAINING CLIP UPPER PART	725810414	54	2	621	10 55 372 1	ROOF RAILING RFK
RETAINING DEVICE CPL	11286105	12	1	509	11 24 132 4	BOOM HEAD CPL
RETAINING PLATE	11236318	11	1	557	11 28 982 7	TRANSPORT LASHING
RETAINING PLATE	11241209	10	1	557	11 28 982 7	TRANSPORT LASHING
RETAINING PLATE	11243383	10	1	491	11 28 794 6	TRANSPORT LASHING
RETAINING PLATE	11285055	11	1	491	11 28 794 6	TRANSPORT LASHING
RETAINING SPRING 3MM	11297461	3	1	677	11 23 623 3	POCKET LOCK
RETAINING SPRING 4.5 MM	433105414	12	4	308	10 52 656 0	MOUNTING PARTS
RETAINING SPRING 4.5 MM	433105414	27	2	582	99 38 329 14	TIP BOOM CPL
RETAINING SPRING 4.5 MM	433105414	12	2	606	10 51 743 9	ROPE LUG CPL RFK
RETAINING SPRING 4.5 MM	433105414	11	1	626	11 21 546 2	WARNING LIGHT INSTALL RFK
RETAINING SPRING 4MM	433101208	12	1	494	11 23 290 7	SUPPORT CPL
RETAINING SPRING 4MM	433101208	53	2	512	11 28 629 9	MOUNTING PARTS
RETAINING SPRING 4MM	433101208	34	8	521	99 23 398 14	ROLLER SET
RETAINING SPRING 4MM	433101208	36	4	533	11 29 426 7	MOUNTING PARTS
RETAINING SPRING 4MM	433101208	41	6	541	11 29 938 4	MOUNTING PARTS
RETAINING SPRING 4MM	433101208	41	2	577	99 48 521 14	TIP BOOM CPL

Description	Item	Pos.	Quantity	Sheet	Assembly	Description
RETAINING SPRING 4MM	433101208	23	8	633	10 51 176 9	NEEDLE BOOM CPL
RETAINING SPRING 4MM	433101208	6	12	639	99 23 405 14	INTERMEDIATE TENSIONING
RETAINING SPRING 4MM	433101208	6	12	641	99 23 420 14	INTERMEDIATE TENSIONING
RETAINING SPRING 4MM	433101208	7	14	643	97 05 997 03	INTERMEDIATE TENSIONING
RETAINING SPRING 4MM	433101208	30	4	671	11 89 568 8	SELF-LOADING SYSTEM RFK
RETAINING SPRING 5MM	433102508	56	2	450	11 23 820 3	PIVOT PIECE CPL
RETAINING SPRING 5MM	433102508	18	2	491	11 28 794 6	TRANSPORT LASHING
RETAINING SPRING 5MM	433102508	37	3	533	11 29 426 7	MOUNTING PARTS
RETAINING SPRING 5MM	433102508	13	1	537	99 35 031 14	ROPE GUARD CPL
RETAINING SPRING 5MM	433102508	42	2	541	11 29 938 4	MOUNTING PARTS
RETAINING SPRING 5MM	433102508	19	2	544	10 53 145 5	TILTING-BACK SUPPORT NEE
RETAINING SPRING 5MM	433102508	18	2	557	11 28 982 7	TRANSPORT LASHING
RETAINING SPRING 5MM	433102508	24	1	570	11 28 774 6	MOUNTING PARTS
RETAINING SPRING 5MM	433102508	20	2	577	99 48 521 14	TIP BOOM CPL
RETAINING SPRING 5MM	433102508	29	8	644	10 51 971 3	SELF-LOADING SYSTEM RFK
RETAINING SPRING DIN 2194 6	433105008	19	6	309	99 29 803 14	LASHING BALLAST
RETAINING SPRING DIN 2194 6	433105008	13	8	450	11 23 820 3	PIVOT PIECE CPL
RETAINING SPRING DIN 2194 6	433105008	15	2	460	99 30 060 14	ANCHORING ROD CPL
RETAINING SPRING DIN 2194 6	433105008	12	2	483	11 28 726 4	PIN CPL
RETAINING SPRING DIN 2194 6	433105008	15	2	492	99 24 404 14	ANCHORING ROD CPL
RETAINING SPRING DIN 2194 6	433105008	6	2	493	91 85 910 14	ANCHORING ROD CPL
RETAINING SPRING DIN 2194 6	433105008	15	2	500	99 24 405 14	ANCHORING ROD CPL
RETAINING SPRING DIN 2194 6	433105008	6	2	501	91 85 911 14	ANCHORING ROD CPL
RETAINING SPRING DIN 2194 6	433105008	15	2	506	99 24 406 14	ANCHORING ROD CPL
RETAINING SPRING DIN 2194 6	433105008	6	2	507	99 03 609 14	ANCHORING ROD CPL
RETAINING SPRING DIN 2194 6	433105008	54	2	512	11 28 629 9	MOUNTING PARTS
RETAINING SPRING DIN 2194 6	433105008	15	2	519	99 24 594 14	ANCHORING ROD CPL
RETAINING SPRING DIN 2194 6	433105008	20	2	525	11 24 336 5	PIVOT PIECE NEEDLE CPL
RETAINING SPRING DIN 2194 6	433105008	12	2	528	11 28 852 3	PIN CPL
RETAINING SPRING DIN 2194 6	433105008	25	2	535	99 26 359 14	ANCHORING ROD CPL
RETAINING SPRING DIN 2194 6	433105008	15	2	571	99 26 362 14	ANCHORING ROD CPL
RETAINING SPRING DIN 2194 6	433105008	21	3	577	99 48 521 14	TIP BOOM CPL
RETAINING SPRING DIN 2194 6	433105008	25	8	633	10 51 176 9	NEEDLE BOOM CPL
RETAINING SPRING DIN 2194 6	433105008	44	2	637	99 10 116 14	ROPE GUIDE
RETAINING SPRING DIN 2194 6	433105008	11	1	650	11 23 619 7	SELF-LOADING SYSTEM RFK
RETURN FILTER	10515724	12	1	44	10 56 070 1	TANK HYDR CPL
RETURN PIPE	10580170	19	1	73	11 24 048 0	CENTRAL POWER UNIT
RIBBED HEX NUT M6 10	10003366	3	1	223	90 78 314	HEATING FLANGE ADD-ON
RING	11220477	10	1	698	11 22 037 2	FOOT PEDAL EL INSTALLATIO
RING	11267455	10	1	92	11 21 935 0	PUMP COVER
RING	9267341	11	1	98	92 67 343	VENTILATION VALVE
RING BOLT DIN 580 M12 C15E	402600314	32	2	582	99 38 329 14	TIP BOOM CPL
RING BOLT DIN 580 M12 C15E	402600314	34	2	637	99 10 116 14	ROPE GUIDE
RING BOLT DIN 580 M16 C15E	402600514	10	6	309	99 29 803 14	LASHING BALLAST
RING BOLT DIN 580 M8 C15E;E	402600114	62	1	284	11 24 409 0	PANELLING SUPERSTR. INSTA
RK ADDITIONAL PARTS	10122248	80	1	116	10 12 878 7	V PUMP
RK CRANKSHAFT SEAL	10121335	2	1	188	10 12 134 5	RK CRANKSHAFT SEAL
RK CRANKSHAFT SEAL	10121345	52	1	171	10 14 032 7	DIESEL ENGINE
RK CRANKSHAFT SEAL	10121952	1	1	188	10 12 134 5	RK CRANKSHAFT SEAL
RK CYL.+CONTROL PLATE+SH	10138026	2	1	122	10 13 802 5	REPAIR KIT DRIVING MECHAN
RK CYLINDER+CONTROL PLAT	9889832	2	1	109	98 89 983	REPAIR KIT DRIVING MECHAN
RK CYLINDER+CONTROL PLAT	9889833	2	1	105	98 89 984	REPAIR KIT DRIVING MECHAN
RK INJECTOR	10152874	5	1	207	10 15 286 7	INJECTOR WITH FASTENING
RK PISTON WITH GUIDE SHO	10122692	4	1	122	10 13 802 5	REPAIR KIT DRIVING MECHAN
RK PISTON WITH GUIDE SHO	9889831	1	9	105	98 89 984	REPAIR KIT DRIVING MECHAN
RK PISTON WITH GUIDE SHO	9889831	1	1	109	98 89 983	REPAIR KIT DRIVING MECHAN
RK PRESSUR CUT-OFF	10118367	83	1	95	10 11 834 9	DOUBLE V-PUMP
RK PRESSURE ADAPTER	10141140	5	1	208	10 15 315 1	PRESSURE ADAPTER
RK PULL-BACK BALL+PULL-B.	9078214	3	1	122	10 13 802 5	REPAIR KIT DRIVING MECHAN
RK PULL-BACK BALL+PULL-B.	9889988	14	1	105	98 89 984	REPAIR KIT DRIVING MECHAN

Description	Item	Pos.	Quantity	Sheet	Assembly	Description
RK PULL-BACK BALL+PULL-B.	9889988	14	1	109	98 89 983	REPAIR KIT DRIVING MECHAN
ROCKER ARM BRACKET CPL.	10148438	81	6	171	10 14 032 7	DIESEL ENGINE
ROCKER ARM BRACKET PRE	10142641	1	1	194	10 14 843 8	ROCKER ARM BRACKET CPL.
ROCKER ST.CONST.	10533999	12	2	64	10 51 969 4	A-FRAME ERECTION CYL INST
ROD	919421714	8	2	639	99 23 405 14	INTERMEDIATE TENSIONING
ROD CPL	11273458	212	2	352	11 27 973 6	CABIN EL
ROD GUIDE RING	513319814	17	1	403	51 33 141 14	DOUBLE-ACTING CYL
ROD SEAL	10352315	55	1	669	59 21 826 14	SUPPORT CYL
ROD SEAL	726306414	10	1	690	59 20 008 14	DOUBLE-ACTING CYL
ROD SEAL	726307914	10	1	23	51 33 139 14	DOUBLE-ACTING CYL
ROD SEAL	726308514	85	1	669	59 21 826 14	SUPPORT CYL
ROD SEAL	790400514	14	1	548	59 21 280 14	SINGLE-ACTING CYL
ROLLER	11256217	19	2	473	11 24 444 4	A-FRAME 1 CPL
ROLLER	289058014	13	1	633	10 51 176 9	NEEDLE BOOM CPL
ROLLER	970961303	16	4	570	11 28 774 6	MOUNTING PARTS
ROLLER	970961303	23	4	582	99 38 329 14	TIP BOOM CPL
ROLLER	970961303	19	1	637	99 10 116 14	ROPE GUIDE
ROLLER BEARING	10522848	3	1	584	79 03 862 14	LOAD HOOK
ROLLER BEARING	10573891	11	1	595	11 27 148 8	HANGER
ROLLER BEARING	10574043	3	1	589	11 27 463 8	HANGER
ROLLER CARRIER	919022714	25	1	637	99 10 116 14	ROPE GUIDE
ROLLER CORE	10097984	1	1	413	79 05 233 14	CARRYING ROLLER CPL
ROLLER SET	992339814	82	1	3	01 38 281 14	LR 1300 SX
ROLLER ST.CONST.	971361703	19	1	320	10 51 968 6	LUG SUPERSTRUCTURE CPL
ROOF	10545911	3	1	282	11 24 409 0	PANELLING SUPERSTR. INSTA
ROOF	10545914	5	1	282	11 24 409 0	PANELLING SUPERSTR. INSTA
ROOF	10545916	7	1	282	11 24 409 0	PANELLING SUPERSTR. INSTA
ROOF	10545917	8	1	282	11 24 409 0	PANELLING SUPERSTR. INSTA
ROOF	10545957	11	1	282	11 24 409 0	PANELLING SUPERSTR. INSTA
ROOF	10545958	12	1	282	11 24 409 0	PANELLING SUPERSTR. INSTA
ROOF	10545968	3	1	298	10 54 591 0	MOTOR COWLING
ROOF	10545969	4	1	298	10 54 591 0	MOTOR COWLING
ROOF	10545970	5	1	298	10 54 591 0	MOTOR COWLING
ROOF	10546335	6	1	298	10 54 591 0	MOTOR COWLING
ROOF	10563073	16	1	282	11 24 409 0	PANELLING SUPERSTR. INSTA
ROOF	10563099	1	1	298	10 54 591 0	MOTOR COWLING
ROOF	11244758	14	1	282	11 24 409 0	PANELLING SUPERSTR. INSTA
ROOF	11244865	13	1	282	11 24 409 0	PANELLING SUPERSTR. INSTA
ROOF RAILING RFK	10553721	553	1	3	01 38 281 14	LR 1300 SX
ROOF WINDOW	592288614	44	1	366	10 35 250 8	CABIN
ROPE	774730714	12	40	317	99 23 387 14	ROPES LUG NEEDLE BOOM
ROPE	774762314	11	1	606	10 51 743 9	ROPE LUG CPL RFK
ROPE CLAMP	540271714	5	1	614	54 02 702 14	ROPE DRUM CPL
ROPE DRUM	10555972	900	1	326	10 55 597 3	ROPE DRUM
ROPE DRUM	10555973	2	1	324	10 55 156 3	WINCH
ROPE DRUM	11231269	2	1	425	10 53 039 8	WINCH
ROPE DRUM	540273314	1	1	614	54 02 702 14	ROPE DRUM CPL
ROPE DRUM CPL	540270214	21	1	612	59 20 694 14	WINCH
ROPE FIXING POINT	11210606	5	1	593	79 04 871 14	BOTTOM HOOK BLOCK
ROPE FIXING POINT	11481158	5	1	586	79 04 112 14	BOTTOM HOOK BLOCK
ROPE FIXING POINT STRAP	970827603	9	1	329	99 29 258 14	LUG SHEAVE SET
ROPE GUARD	10349201	10	1	533	11 29 426 7	MOUNTING PARTS
ROPE GUARD	10349201	17	2	541	11 29 938 4	MOUNTING PARTS
ROPE GUARD	10349202	11	1	533	11 29 426 7	MOUNTING PARTS
ROPE GUARD	11271479	6	1	593	79 04 871 14	BOTTOM HOOK BLOCK
ROPE GUARD	11481159	6	1	586	79 04 112 14	BOTTOM HOOK BLOCK
ROPE GUARD CPL	11287255	12	1	482	11 24 570 3	BOOM INTERMEDIATE SECTIO
ROPE GUARD CPL	11287255	12	2	498	11 24 570 9	BOOM INTERMEDIATE SECTIO
ROPE GUARD CPL	11287255	12	4	504	11 24 571 5	BOOM INTERMEDIATE SECTIO
ROPE GUARD CPL	11287255	12	1	552	11 24 084 8	BOOM INTERMEDIATE SECTIO

Description	Item	Pos.	Quantity	Sheet	Assembly	Description
ROPE GUARD CPL	11287255	12	2	559	11 24 162 5	BOOM INTERMEDIATE SECTIO
ROPE GUARD CPL	11287255	12	4	562	11 24 163 0	BOOM INTERMEDIATE SECTIO
ROPE GUARD CPL	11294517	41	5	525	11 24 336 5	PIVOT PIECE NEEDLE CPL
ROPE GUARD CPL	11294517	16	1	564	11 24 263 6	NEEDLE HEAD CPL
ROPE GUARD CPL	11294573	17	2	564	11 24 263 6	NEEDLE HEAD CPL
ROPE GUARD CPL	11294626	18	1	564	11 24 263 6	NEEDLE HEAD CPL
ROPE GUARD CPL	11294884	14	2	531	11 24 475 9	A-FRAME 2 CPL
ROPE GUARD CPL	993503114	15	1	531	11 24 475 9	A-FRAME 2 CPL
ROPE GUARD LUG CPL	992925914	12	1	320	10 51 968 6	LUG SUPERSTRUCTURE CPL
ROPE GUARD LUG CPL	993353714	1	1	330	99 29 259 14	ROPE GUARD LUG CPL
ROPE GUARD ST.CONST.	993522914	20	1	521	99 23 398 14	ROLLER SET
ROPE GUARD TUBE	950562414	11	1	537	99 35 031 14	ROPE GUARD CPL
ROPE GUARD TUBE	951577814	12	1	533	11 29 426 7	MOUNTING PARTS
ROPE GUARD TUBE	956809314	36	2	521	99 23 398 14	ROLLER SET
ROPE GUARD TUBE	956809514	21	1	521	99 23 398 14	ROLLER SET
ROPE GUARD TUBE	959841814	25	2	473	11 24 444 4	A-FRAME 1 CPL
ROPE GUIDE	991011614	605	1	3	01 38 281 14	LR 1300 SX
ROPE GUIDE WELD.CONST.	991011714	10	1	637	99 10 116 14	ROPE GUIDE
ROPE LEFT	11227045	10	1	340	11 22 703 7	ROPES LUG MAIN BOOM
ROPE LEFT	790517014	122	1	3	01 38 281 14	LR 1300 SX
ROPE LEFT	790517114	121	1	3	01 38 281 14	LR 1300 SX
ROPE LUG CPL RFK	10517439	550	1	3	01 38 281 14	LR 1300 SX
ROPE MOUNTING RFK	11236266	680	2	4	01 38 281 14	LR 1300 SX
ROPE PROTECTION ROD	10814912	12	2	586	79 04 112 14	BOTTOM HOOK BLOCK
ROPE PROTECTION ROD	11271482	12	2	593	79 04 871 14	BOTTOM HOOK BLOCK
ROPE PULL	592286314	26	1	370	10 50 133 3	SLIDING DOOR
ROPE PULLEY	10504352	1	1	586	79 04 112 14	BOTTOM HOOK BLOCK
ROPE PULLEY	10504352	1	3	593	79 04 871 14	BOTTOM HOOK BLOCK
ROPE PULLEY	947037314	1	1	638	91 49 419 14	ROPE PULLEY CPL
ROPE PULLEY	967217003	1	1	611	96 72 161 03	ROPE PULLEY CPL
ROPE PULLEY CPL	790202014	10	10	521	99 23 398 14	ROLLER SET
ROPE PULLEY CPL	790202014	6	5	570	11 28 774 6	MOUNTING PARTS
ROPE PULLEY CPL	790202014	22	1	577	99 48 521 14	TIP BOOM CPL
ROPE PULLEY CPL	790202014	1	1	580	91 89 071 14	TIP BOOM MODIFICATION
ROPE PULLEY CPL	790202014	12	1	582	99 38 329 14	TIP BOOM CPL
ROPE PULLEY CPL	790202014	12	1	631	91 92 763 14	HOOK 2 RFK
ROPE PULLEY CPL	914690714	4	12	329	99 29 258 14	LUG SHEAVE SET
ROPE PULLEY CPL	914690714	13	13	473	11 24 444 4	A-FRAME 1 CPL
ROPE PULLEY CPL	914941914	13	4	637	99 10 116 14	ROPE GUIDE
ROPE PULLEY CPL	915523714	12	1	521	99 23 398 14	ROLLER SET
ROPE PULLEY CPL	915523714	5	9	533	11 29 426 7	MOUNTING PARTS
ROPE PULLEY CPL	915523714	11	7	541	11 29 938 4	MOUNTING PARTS
ROPE PULLEY CPL	915523714	12	1	637	99 10 116 14	ROPE GUIDE
ROPE PULLEY CPL	919279914	11	3	521	99 23 398 14	ROLLER SET
ROPE PULLEY CPL	919279914	4	1	533	11 29 426 7	MOUNTING PARTS
ROPE PULLEY CPL	919279914	12	1	541	11 29 938 4	MOUNTING PARTS
ROPE PULLEY CPL	919279914	10	2	631	91 92 763 14	HOOK 2 RFK
ROPE PULLEY CPL	919279914	32	2	633	10 51 176 9	NEEDLE BOOM CPL
ROPE PULLEY CPL	967216103	14	2	606	10 51 743 9	ROPE LUG CPL RFK
ROPE REEVING WINCH HYDR	10542516	2	1	606	10 51 743 9	ROPE LUG CPL RFK
ROPE RIGHT	10227828	10	1	317	99 23 387 14	ROPES LUG NEEDLE BOOM
ROPE SHEAVE	11271491	1	1	587	10 50 435 2	ROPE PULLEY
ROPES LUG MAIN BOOM	11227037	26	1	2	01 38 281 14	LR 1300 SX
ROPES LUG NEEDLE BOOM	992338714	24	1	2	01 38 281 14	LR 1300 SX
ROTARY FEED THROUGH HYD	10550970	2	1	392	11 25 903 1	TUBING HYDR
ROTARY LOCK	592285814	4	1	370	10 50 133 3	SLIDING DOOR
ROTARY SHAFT LIP SEAL	10014510	35	1	112	92 68 016	REPAIR KIT LOCK RING
ROTARY SHAFT LIP SEAL	571360008	50	1	339	99 04 645 14	DRIVE
ROTATABLE BEAM	11271490	2	1	595	11 27 148 8	HANGER
ROTATABLE BEAM	11274675	2	1	589	11 27 463 8	HANGER

Description	Item	Pos.	Quantity	Sheet	Assembly	Description
ROTATING BAR CPL	10020161	6	2	290	10 57 883 5	DOOR
ROTATING BAR CPL	10020161	12	2	292	10 57 897 6	DOOR
ROTATING BAR CPL	10020161	9	1	294	10 57 940 0	DOOR
ROTATING BAR CPL	10020161	9	2	295	10 56 623 7	DOOR
ROTATING BAR CPL	10020161	12	2	296	10 56 580 8	DOOR
ROTATIONAL SPEED SENSOR	10800265	1	1	251	10 13 307 7	ROTATIONAL SPEED SENSOR
ROTATIONAL SPEED SENSOR	10133077	20	2	250	10 14 297 7	ENGINE CONTROL SENSORS
ROUND SLING	10222935	92	2	443	10 56 187 5	TOOL EQUIPMENT
ROUND SLING	10280543	27	4	650	11 23 619 7	SELF-LOADING SYSTEM RFK
ROUND SLING	10350540	17	1	531	11 24 475 9	A-FRAME 2 CPL
ROUND SLING	790269114	93	1	443	10 56 187 5	TOOL EQUIPMENT
ROUND SLING	790365114	29	1	650	11 23 619 7	SELF-LOADING SYSTEM RFK
ROUND STEEL	954584908	17	144	408	10 55 876 0	CRAWLER CARRIER RIGHT CP
ROUND STEEL	954584908	17	144	417	10 55 876 1	CRAWLER CARRIER LEFT CP
RS FLANGE	9077464	1	2	104	10 13 975 2	REPAIR SET SWIVEL YOKE
RUBBER	10522190	5	1	373	59 22 871 14	FRONT WINDOW CPL
RUBBER	10535526	12	1	479	99 29 588 14	SUPPORT
RUBBER	10535526	12	2	480	10 35 063 3	FASTENER
RUBBER	10540082	68	2	450	11 23 820 3	PIVOT PIECE CPL
RUBBER	11269800	9	1	254	11 24 114 0	COOLER INSTALLATION WATE
RUBBER	11285382	11	1	486	11 28 391 3	FIXING CLAMP
RUBBER	11285382	15	2	525	11 24 336 5	PIVOT PIECE NEEDLE CPL
RUBBER	11285382	11	1	555	11 28 667 9	FIXING CLAMP
RUBBER	289040314	17	4	537	99 35 031 14	ROPE GUARD CPL
RUBBER	289062814	13	0.1	554	11 28 979 0	GRATING CARRIER
RUBBER	950840114	46	1	582	99 38 329 14	TIP BOOM CPL
RUBBER BELLOWS	10289977	42	1	692	10 04 363 3	DRIVERS SEAT AIR-SUSPEN
RUBBER BELLOWS	10289978	40	1	692	10 04 363 3	DRIVERS SEAT AIR-SUSPEN
RUBBER BELLOWS	606272314	1	1	357	11 21 481 8	MASTER SWITCH
RUBBER BELLOWS	7025004	40	1	380	10 22 506 8	OPERATOR SEAT
RUBBER BELLOWS	7366620	42	1	380	10 22 506 8	OPERATOR SEAT
RUBBER CONNECTION	10123671	3	1	186	10 14 671 6	OIL LINE PRE-ASSEMBLY
RUBBER CONNECTION	10126090	4	1	179	10 14 201 8	CRANKCASE BREATHER ASS
RUBBER CONNECTION	10126091	2	1	179	10 14 201 8	CRANKCASE BREATHER ASS
RUBBER CONNECTION	10126317	7	1	186	10 14 671 6	OIL LINE PRE-ASSEMBLY
RUBBER CONNECTION	10128228	9	4	238	10 14 622 4	CYCLE VALVE
RUBBER CONNECTION	10128875	24	1	236	10 14 013 6	EXHAUST TC MOUNTING
RUBBER CONNECTION	10133641	3	1	179	10 14 201 8	CRANKCASE BREATHER ASS
RUBBER CONNECTION	9271340	13	1	221	10 14 736 9	INTAKE STACK ASSEMBLY
RUBBER MOUNT	726611214	18	4	422	99 26 718 14	PEDESTAL
RUBBER MOUNT	726612114	50	4	261	11 24 114 1	COOLER INSTALLATION CHA
RUBBER MOUNT	726612214	88	4	451	11 23 820 3	PIVOT PIECE CPL
RUBBER MOUNT	726612214	13	1	487	11 28 397 7	SUMP PAN CPL
RUBBER MOUNT	726612214	13	1	488	11 28 397 8	SUMP PAN CPL
RUBBER MOUNT	726612214	13	1	489	11 28 399 5	SUMP PAN CPL
RUBBER MOUNT	726612214	13	1	490	11 28 399 7	SUMP PAN CPL
RUBBER MOUNT	726613014	20	1	515	10 59 863 3	PENDULUM CPL
RUBBER MOUNT	726613614	30	4	254	11 24 114 0	COOLER INSTALLATION WATE
RUBBER MOUNT	726616208	23	2	570	11 28 774 6	MOUNTING PARTS
RUBBER MOUNT	726616208	55	2	621	10 55 372 1	ROOF RAILING RFK
RUBBER MOUNT	726616614	58	10	621	10 55 372 1	ROOF RAILING RFK
RUBBER MOUNT	726902614	21	4	290	10 57 883 5	DOOR
RUBBER MOUNT	726904014	37	1	58	10 58 163 4	CABIN SUSPENSION CPL
RUBBER MOUNT	726910114	19	3	58	10 58 163 4	CABIN SUSPENSION CPL
RUBBER MOUNT	726922114	37	2	577	99 48 521 14	TIP BOOM CPL
RUBBER MOUNT	726922214	13	4	41	10 51 961 6	OIL COOLER INSTALLATION
RUBBER RING	10123876	103	2	248	10 15 028 8	CABLE HARNESS MOUNTING
RUBBER RING	10123877	12	2	160	11 24 448 7	CENTRAL POWER UNIT EL
RUNNING ROLLER CPL	10552633	14	16	408	10 55 876 0	CRAWLER CARRIER RIGHT CP
RUNNING ROLLER CPL	10552633	14	16	417	10 55 876 1	CRAWLER CARRIER LEFT CP

Description	Item	Pos.	Quantity	Sheet	Assembly	Description
SAFETY ELEMENT	11291030	3	1	266	11 24 679 0	AIR FILTER
SAFETY LEVER CPL	693168514	41	1	356	10 51 907 9	CONTROL STAND LEFT
SAFETY PLUG W HINGE-LID 10	10098106	12	2	388	99 18 041 14	LASHING SUPERSTRUCTURE
SAFETY PLUG W HINGE-LID 10	10098106	25	4	570	11 28 774 6	MOUNTING PARTS
SAFETY PLUG W HINGE-LID 10	10098106	45	2	637	99 10 116 14	ROPE GUIDE
SAFETY PLUG W HINGE-LID 12	485544014	17	1	582	99 38 329 14	TIP BOOM CPL
SAFETY PLUG W HINGE-LID 12	485544014	28	1	633	10 51 176 9	NEEDLE BOOM CPL
SAFETY PLUG W HINGE-LID 4	485565814	2	2	59	99 08 706 14	LADDER MOUNTING
SAFETY PLUG W HINGE-LID 4	485565814	12	1	487	11 28 397 7	SUMP PAN CPL
SAFETY PLUG W HINGE-LID 4	485565814	12	1	488	11 28 397 8	SUMP PAN CPL
SAFETY PLUG W HINGE-LID 4	485565814	24	2	515	10 59 863 3	PENDULUM CPL
SAFETY PLUG W HINGE-LID 4	485565814	43	2	637	99 10 116 14	ROPE GUIDE
SAFETY PLUG W HINGE-LID 4	485565814	5	1	640	99 10 125 14	FORK
SAFETY PLUG W HINGE-LID 4	485565814	5	1	642	99 06 789 14	FORK
SAFETY PLUG W HINGE-LID 8	432016214	40	1	58	10 58 163 4	CABIN SUSPENSION CPL
SAFETY PLUG W HINGE-LID 8	432016214	26	1	570	11 28 774 6	MOUNTING PARTS
SAFETY PLUG W HINGE-LID 8	432016214	34	2	582	99 38 329 14	TIP BOOM CPL
SAFETY ROLLER	939662601	26	1	450	11 23 820 3	PIVOT PIECE CPL
SAFETY ROLLER	969641401	40	1	316	96 96 543 01	WINCH FRAME
SAFETY TRAP	10350196	2	1	591	11 48 116 2	SINGLE HOOK
SAFETY TRAP	10599212	2	2	597	11 27 148 9	TWIN HOOK
SASH LOCK	10581486	15	1	294	10 57 940 0	DOOR
SCR CPL.	10144049	3	1	268	11 24 114 3	EXHAUST GAS SYSTEM
SCRAPER	10352319	60	1	669	59 21 826 14	SUPPORT CYL
SCRAPER	592031814	9	1	690	59 20 008 14	DOUBLE-ACTING CYL
SCRAPER	592181614	18	1	548	59 21 280 14	SINGLE-ACTING CYL
SCRAPER	749073614	90	1	669	59 21 826 14	SUPPORT CYL
SCRAPER RING	726054214	13	1	403	51 33 141 14	DOUBLE-ACTING CYL
SCRAPER RING	726054414	9	1	23	51 33 139 14	DOUBLE-ACTING CYL
SCREW	592287514	15	1	373	59 22 871 14	FRONT WINDOW CPL
SCREW CARABINER	10473040	22	1	522	99 30 800 14	HOIST LIMIT SWITCH INSTAL.
SCREW DIN 931 M8X050	11236106	19	12	586	79 04 112 14	BOTTOM HOOK BLOCK
SCREW DIN 931 M8X050	11236106	19	12	593	79 04 871 14	BOTTOM HOOK BLOCK
SCREW FITTING CPL	11253240	900	1	101	90 74 418	REGULATING VALVE
SCREW LOCKING	10547904	10	1	324	10 55 156 3	WINCH
SCREW LOCKING	811205708	104	1	97	10 11 835 0	CONNECTION HOUSING
SCREW LOCKING	811205708	104	1	104	10 13 975 2	REPAIR SET SWIVEL YOKE
SCREW LOCKING	811205708	105	1	226	10 14 286 0	AIR COND. COMPRESSOR A
SCREW LOCKING	8655016	105	1	99	10 11 835 7	REPAIR KIT CONNECTION HO
SCREW LOCKING	8655016	105	1	100	92 74 731	SEAL KIT CONNECTING HOUS
SCREW LOCKING	8655016	105	1	129	10 14 131 6	TERMINAL BOARD PRE-ASS.
SCREW LOCKING	8655016	109	1	240	10 12 037 2	STARTER INSTALLATION
SCREW LOCKING	870000814	200	1	512	11 28 629 9	MOUNTING PARTS
SCREW LOCKING	8700012	106	1	110	98 89 832	RK CYLINDER+CONTROL PLAT
SCREW M12X30	11249772	10	3	395	10 55 097 0	ROTARY FEED THROUGH HYD
SCREW M30X1.5X150	10590183	12	4	410	10 55 716 2	GUIDE WHEEL CPL
SCREW PLUG	10041903	10	5	175	10 14 768 6	POWER UNIT SUPPORT ATT
SCREW PLUG	10097983	8	1	413	79 05 233 14	CARRYING ROLLER CPL
SCREW PLUG	10115232	13	1	399	11 22 473 8	ADJUSTMENT
SCREW PLUG	10116078	4	1	215	10 14 675 3	FUEL FINE FILTER
SCREW PLUG	10137108	29	3	129	10 14 131 6	TERMINAL BOARD PRE-ASS.
SCREW PLUG	10137108	19	1	134	10 13 803 3	SEAL KIT CPL.
SCREW PLUG	10137108	30	3	135	10 13 803 4	GASKET KIT INT.FLANGE
SCREW PLUG	10137113	20	3	134	10 13 803 3	SEAL KIT CPL.
SCREW PLUG	10137113	24	4	135	10 13 803 4	GASKET KIT INT.FLANGE
SCREW PLUG	10137115	27	2	129	10 14 131 6	TERMINAL BOARD PRE-ASS.
SCREW PLUG	10137115	27	2	135	10 13 803 4	GASKET KIT INT.FLANGE
SCREW PLUG	10137121	28	2	95	10 11 834 9	DOUBLE V-PUMP
SCREW PLUG	10137121	29	2	114	92 76 408	SEAL KIT DOUBLE PUMP
SCREW PLUG	10137312	20	1	129	10 14 131 6	TERMINAL BOARD PRE-ASS.

Description	Item	Pos.	Quantity	Sheet	Assembly	Description
SCREW PLUG	10137312	20	1	135	10 13 803 4	GASKET KIT INT.FLANGE
SCREW PLUG	10519025	30	1	399	11 22 473 8	ADJUSTMENT
SCREW PLUG	10598295	55	4	261	11 24 114 1	COOLER INSTALLATION CHA
SCREW PLUG	11217837	30	1	144	11 22 127 4	PUMP ELEMENT
SCREW PLUG	11224761	7	1	399	11 22 473 8	ADJUSTMENT
SCREW PLUG	11267402	20	1	86	11 21 993 0	PUMP HOUSING
SCREW PLUG	11267403	28	1	86	11 21 993 0	PUMP HOUSING
SCREW PLUG	11267415	1	1	87	10 59 347 4	PRESSURE LIMITING VALVE
SCREW PLUG	11267421	1	1	88	11 21 936 9	LOCKING SET
SCREW PLUG	11267439	1	1	89	11 06 730 4	SHUTDOWN VALVE
SCREW PLUG	11267451	1	1	91	11 26 744 7	SHUTTLE VALVE
SCREW PLUG	592316314	210	1	78	11 24 682 0	DISTRIBUTOR GEARBOX
SCREW PLUG	7020821	4	1	148	10 35 160 3	CONTROL VALVE
SCREW PLUG	7380177	4	3	174	10 15 438 6	CRANKCASE CPL.
SCREW PLUG	7380566	6	3	174	10 15 438 6	CRANKCASE CPL.
SCREW PLUG	7380566	12	1	200	10 12 948 0	OIL COOLER, PRE-ASSEMBLE
SCREW PLUG	7380566	7	1	221	10 14 736 9	INTAKE STACK ASSEMBLY
SCREW PLUG	7380566	20	1	236	10 14 013 6	EXHAUST TC MOUNTING
SCREW PLUG	7380688	3	2	215	10 14 675 3	FUEL FINE FILTER
SCREW PLUG	7381457	7	2	174	10 15 438 6	CRANKCASE CPL.
SCREW PLUG	7381457	17	1	221	10 14 736 9	INTAKE STACK ASSEMBLY
SCREW PLUG	7381457	21	1	236	10 14 013 6	EXHAUST TC MOUNTING
SCREW PLUG	7381638	11	1	200	10 12 948 0	OIL COOLER, PRE-ASSEMBLE
SCREW PLUG	7381638	10	2	242	10 11 557 7	FLYWHEEL HOUSING MOUNT
SCREW PLUG	7381638	4	1	252	10 14 637 4	LOCKING PIECES
SCREW PLUG	7382203	5	2	252	10 14 637 4	LOCKING PIECES
SCREW PLUG	7382204	8	2	200	10 12 948 0	OIL COOLER, PRE-ASSEMBLE
SCREW PLUG	7414500	24	3	399	11 22 473 8	ADJUSTMENT
SCREW PLUG 11SMNPB30+C	10137918	2	1	176	10 13 845 0	FINAL CONTROL VALVE
SCREW PLUG 3/4"-16UNF	7370843	30	1	154	11 21 593 6	PUMP ELEMENT
SCREW PLUG 9SMNPB28K	10134944	2	1	201	10 12 949 9	FINAL CONTROL VALVE
SCREW PLUG AEHNL.DIN 908	409710601	67	3	412	96 93 178 01	TRACTION DRIVE
SCREW PLUG D26X26 G1/2"	505105814	250	2	78	11 24 682 0	DISTRIBUTOR GEARBOX
SCREW PLUG DIN 906 M10X1	403900101	80	1	615	54 02 703 14	FLANGE CPL
SCREW PLUG DIN 906 M10X1	403900101	34	4	665	11 89 568 6	SELF-LOADING SYSTEM RFK
SCREW PLUG DIN 906 ST	403900501	22	1	129	10 14 131 6	TERMINAL BOARD PRE-ASS.
SCREW PLUG DIN 908 G1/2	11239915	3	1	655	51 16 404 14	LOWERING BRAKE VALVE
SCREW PLUG DIN 908 G1/8	11239904	5	1	657	59 21 584 14	LOWERING BRAKE VALVE
SCREW PLUG DIN 908 G3/8	11239897	4	1	657	59 21 584 14	LOWERING BRAKE VALVE
SCREW PLUG DIN 908 M10X1	502027614	60	2	339	99 04 645 14	DRIVE
SCREW PLUG DIN 908 M12X1.	502027514	122	1	339	99 04 645 14	DRIVE
SCREW PLUG DIN 908 M18X1.	4600320	64	1	339	99 04 645 14	DRIVE
SCREW PLUG DIN 908 M22X1.5	404101608	30	2	614	54 02 702 14	ROPE DRUM CPL
SCREW PLUG DIN 910 R1/2" 5.	4000898	480	9	78	11 24 682 0	DISTRIBUTOR GEARBOX
SCREW PLUG G1/2"-ED	11226023	60	2	346	51 14 347 14	SG SAFETY BLOCK
SCREW PLUG G1/4"-ED	11226129	150	1	346	51 14 347 14	SG SAFETY BLOCK
SCREW PLUG G1/8"-ED	11226130	160	1	346	51 14 347 14	SG SAFETY BLOCK
SCREW PLUG G3/8"-ED	11226133	165	1	346	51 14 347 14	SG SAFETY BLOCK
SCREW PLUG M10X1	10115237	28	2	154	11 21 593 6	PUMP ELEMENT
SCREW PLUG M10X1	10115237	25	4	399	11 22 473 8	ADJUSTMENT
SCREW PLUG M14X1.5 NBR	10337050	4	1	82	11 21 992 7	COVER
SCREW PLUG M14X1.5 NBR	10337050	4	1	83	11 21 992 9	COVER
SCREW PLUG M14X1.5 NBR	10337050	12	1	86	11 21 993 0	PUMP HOUSING
SCREW PLUG M14X1.5 NBR	10337050	13	1	86	11 21 993 0	PUMP HOUSING
SCREW PLUG M14X1.5 NBR	10337050	14	1	86	11 21 993 0	PUMP HOUSING
SCREW PLUG M14X1.5 NBR	10337050	15	1	86	11 21 993 0	PUMP HOUSING
SCREW PLUG M14X1.5 NBR	10337050	16	1	86	11 21 993 0	PUMP HOUSING
SCREW PLUG M14X1.5 NBR	10337050	17	1	86	11 21 993 0	PUMP HOUSING
SCREW PLUG M14X1.5 NBR	10337050	18	1	86	11 21 993 0	PUMP HOUSING
SCREW PLUG M14X1.5 NBR	10337050	26	1	94	11 21 991 8	BEARING FLANGE

Description	Item	Pos.	Quantity	Sheet	Assembly	Description
SCREW PLUG M18X1.5 NBR	10337052	21	1	86	11 21 993 0	PUMP HOUSING
SCREW PLUG M22X1.5	10340236	19	2	273	10 30 300 7	FUEL PREFILTER
SCREW PLUG M22X1.5	10349193	22	1	86	11 21 993 0	PUMP HOUSING
SCREW PLUG M22X1.5	10349193	23	1	86	11 21 993 0	PUMP HOUSING
SCREW PLUG M26X1.5	10503477	13	1	397	51 24 059 14	VARIABLE DISPLACEMENT MO
SCREW PLUG M33X2 NBR	10289931	24	1	86	11 21 993 0	PUMP HOUSING
SCREW PLUG M48X2	10525039	42	1	86	11 21 993 0	PUMP HOUSING
SCREW PLUG M48X2	9885660	16	2	97	10 11 835 0	CONNECTION HOUSING
SCREW PLUG M6	9268441	8	3	102	92 73 644	SEAL KIT REGULATING VALVE
SCREW PLUG M6	9268441	8	5	129	10 14 131 6	TERMINAL BOARD PRE-ASS.
SCREW PLUG M6	9268441	8	5	135	10 13 803 4	GASKET KIT INT.FLANGE
SCREW PLUG M8X1	9881609	7	2	129	10 14 131 6	TERMINAL BOARD PRE-ASS.
SCREW PLUG M8X1	9881609	8	2	134	10 13 803 3	SEAL KIT CPL.
SCREW PLUG M8X1	9881609	7	2	135	10 13 803 4	GASKET KIT INT.FLANGE
SCREW UN 1206 M10X30	10502692	5	1	31	10 53 048 9	FUSE HOLDER
SCREW UN 1206 M10X30	10502692	55	1	708	10 56 013 7	MAINS SUPPLY BATTERY
SCREW-ON CONNECTION	7402493	19	1	236	10 14 013 6	EXHAUST TC MOUNTING
SEAL	10115623	18	1	236	10 14 013 6	EXHAUST TC MOUNTING
SEAL	10117891	2	1	199	10 12 948 1	OIL COOLER ADD-ON
SEAL	10118556	2	6	220	10 14 736 6	AIR INTAKE PIPE ASS.
SEAL	10119923	3	2	200	10 12 948 0	OIL COOLER, PRE-ASSEMBLE
SEAL	10125740	3	1	236	10 14 013 6	EXHAUST TC MOUNTING
SEAL	10126427	3	1	181	10 14 844 4	OIL SUMP WITH FASTENING
SEAL	10126510	2	1	195	10 13 475 1	CYLINDER HEAD COVER ASS
SEAL	10126510	2	1	196	10 12 653 5	CYLINDER HEAD COVER ASS
SEAL	10126510	3	1	198	10 13 469 6	CYLINDER HEAD COVER ASS
SEAL	10126738	2	1	175	10 14 768 6	POWER UNIT SUPPORT ATT
SEAL	10135885	2	6	234	10 14 144 4	EXHAUST PIPE ASSEMBLY
SEAL	10137721	5	1	242	10 11 557 7	FLYWHEEL HOUSING MOUNT
SEAL	10142813	3	1	269	10 14 404 9	SCR CPL.
SEAL	10144102	31	2	268	11 24 114 3	EXHAUST GAS SYSTEM
SEAL	10144861	14	1	275	11 24 114 5	ASSEMBLY INSTAL.
SEAL	10294171	4	1	273	10 30 300 7	FUEL PREFILTER
SEAL	10297876	2	1	148	10 35 160 3	CONTROL VALVE
SEAL	10297876	2	1	157	10 11 497 5	CONTROL VALVE
SEAL	11251434	6	1	396	11 89 617 8	SEALING SET
SEAL	552006114	26	2	44	10 56 070 1	TANK HYDR CPL
SEAL	592290914	93	1	367	10 35 250 8	CABIN
SEAL	7011131	2	1	183	50 04 624	OIL DRAIN PLUG
SEAL	7412935	18	1	273	10 30 300 7	FUEL PREFILTER
SEAL	790230014	9	2	689	10 51 728 1	TUBING HYDR
SEAL	9079130	2	1	243	10 11 912 8	LOCKING PIECES
SEAL	9144762	3	1	197	91 44 757	END COVER
SEAL	9275428	76	1	102	92 73 644	SEAL KIT REGULATING VALVE
SEAL	9882207	15	2	95	10 11 834 9	DOUBLE V-PUMP
SEAL	9882207	15	2	114	92 76 408	SEAL KIT DOUBLE PUMP
SEAL KIT CONNECTING HOUS	9274731	91	1	97	10 11 835 0	CONNECTION HOUSING
SEAL KIT CPL.	10138033	90	1	116	10 12 878 7	V PUMP
SEAL KIT CPL.	512402214	990	1	322	51 22 942 14	OIL MOTOR
SEAL KIT DOUBLE PUMP	9276408	98	1	96	10 11 834 9	DOUBLE V-PUMP
SEAL KIT INJECTOR	10141215	6	1	207	10 15 286 7	INJECTOR WITH FASTENING
SEAL KIT PRESSUR.CONTROL	10123210	4	2	135	10 13 803 4	GASKET KIT INT.FLANGE
SEAL KIT PRESSUR.CONTROL	10123214	90	1	118	10 12 942 0	PRESSURE REDUCTION VALV
SEAL KIT PRESSURE ADAPTE	10141216	6	1	208	10 15 315 1	PRESSURE ADAPTER
SEAL KIT PRESSURE ADAPTE	10141216	12	1	209	10 14 114 0	RK PRESSURE ADAPTER
SEAL KIT PRESSURE VALVE	10332095	90	1	131	10 12 323 6	PRESSURE FEEDER VALVE
SEAL KIT PRESSURE VALVE	10332095	2	2	135	10 13 803 4	GASKET KIT INT.FLANGE
SEAL KIT REGULATING VALVE	10122265	4	1	134	10 13 803 3	SEAL KIT CPL.
SEAL KIT REGULATING VALVE	9273644	89	1	95	10 11 834 9	DOUBLE V-PUMP
SEAL KIT REGULATING VALVE	9273644	90	1	101	90 74 418	REGULATING VALVE

Description	Item	Pos.	Quantity	Sheet	Assembly	Description
SEALANT	8627609	109	1	182	10 14 861 5	OIL SUMP PRE-ASS.
SEALING FLANGE SAE	510705314	43	2	10	11 29 618 6	SUPERSTRUCTURE HYDR
SEALING FLANGE SAE	510710814	44	4	10	11 29 618 6	SUPERSTRUCTURE HYDR
SEALING FLANGE SAE	510710814	15	1	167	10 57 532 2	INTAKE PIPE OIL CPL
SEALING MODULE	602453214	5	2	363	91 65 251 14	CABLE DUCT CABINET 1
SEALING MODULE	602453914	8	2	363	91 65 251 14	CABLE DUCT CABINET 1
SEALING MODULE	602454614	2	2	363	91 65 251 14	CABLE DUCT CABINET 1
SEALING MODULE	602454714	4	2	363	91 65 251 14	CABLE DUCT CABINET 1
SEALING MODULE	602457014	3	2	363	91 65 251 14	CABLE DUCT CABINET 1
SEALING MODULE	602457114	6	2	363	91 65 251 14	CABLE DUCT CABINET 1
SEALING MODULE	602457214	7	2	363	91 65 251 14	CABLE DUCT CABINET 1
SEALING NUT BN 1226 M12	7381226	5	1	201	10 12 949 9	FINAL CONTROL VALVE
SEALING NUT M12X1.75	7005072	18	2	397	51 24 059 14	VARIABLE DISPLACEMENT MO
SEALING PLUG	10030837	14	14	174	10 15 438 6	CRANKCASE CPL.
SEALING PLUG	10134753	3	2	218	10 14 382 8	INJECTION LINES
SEALING PLUG	605614714	14	2	712	10 52 957 6	REFUELLING PUMP CPL
SEALING PLUG	7008121	24	4	129	10 14 131 6	TERMINAL BOARD PRE-ASS.
SEALING PLUG	7380480	7	1	412	96 93 178 01	TRACTION DRIVE
SEALING PLUG	7380490	23	2	129	10 14 131 6	TERMINAL BOARD PRE-ASS.
SEALING PLUG	7380779	16	2	204	10 13 382 3	SUCTION PUMP PRE-ASS.
SEALING PLUG	7382069	8	1	174	10 15 438 6	CRANKCASE CPL.
SEALING PROFILE	10351728	148	1	367	10 35 250 8	CABIN
SEALING PROFILE	10351729	149	1	367	10 35 250 8	CABIN
SEALING PROFILE	262107714	13	4	290	10 57 883 5	DOOR
SEALING PROFILE	262107714	11	4.1	292	10 57 897 6	DOOR
SEALING PROFILE	262107714	13	2.6	294	10 57 940 0	DOOR
SEALING PROFILE	262107714	13	1.35	295	10 56 623 7	DOOR
SEALING PROFILE	262107714	11	2.8	296	10 56 580 8	DOOR
SEALING RING	10011864	6	17	217	10 14 588 5	LEAK OIL RETURN LINE
SEALING RING	10011864	7	2	238	10 14 622 4	CYCLE VALVE
SEALING RING	10011865	11	2	217	10 14 588 5	LEAK OIL RETURN LINE
SEALING RING	10011866	19	3	217	10 14 588 5	LEAK OIL RETURN LINE
SEALING RING	10011866	2	11	231	10 14 821 7	PIPELINE INSTALLATION
SEALING RING	10011866	6	1	233	10 14 274 4	COOLING WATER AIR BLEED
SEALING RING	10011867	16	2	237	10 14 511 2	EXHAUST NOZZLE ATTACHM
SEALING RING	10011868	2	1	185	10 13 451 7	LEVEL SENSOR
SEALING RING	10011868	7	14	216	10 14 333 9	FUEL LINES
SEALING RING	10011870	8	1	221	10 14 736 9	INTAKE STACK ASSEMBLY
SEALING RING	10011870	27	1	236	10 14 013 6	EXHAUST TC MOUNTING
SEALING RING	10011871	14	2	217	10 14 588 5	LEAK OIL RETURN LINE
SEALING RING	10113731	3	1	201	10 12 949 9	FINAL CONTROL VALVE
SEALING RING	10285620	25	2	99	10 11 835 7	REPAIR KIT CONNECTION HO
SEALING RING	10285620	27	2	100	92 74 731	SEAL KIT CONNECTING HOUS
SEALING RING	11226035	80	1	346	51 14 347 14	SG SAFETY BLOCK
SEALING RING	11226086	92	1	346	51 14 347 14	SG SAFETY BLOCK
SEALING RING	4900262	32	7	254	11 24 114 0	COOLER INSTALLATION WATE
SEALING RING	7013116	22	1	102	92 73 644	SEAL KIT REGULATING VALVE
SEALING RING	710004514	5	4	513	11 28 610 5	RETAINING DEVICE CPL
SEALING RING	710020114	15	1	617	54 02 705 14	DRIVE UNIT CPL
SEALING RING	710031014	10	1	616	54 02 704 14	POWER TAKE-OFF CPL
SEALING RING	710069314	11	1	435	11 26 260 6	WINCH 1 HYDR
SEALING RING	710069314	11	1	441	11 26 261 1	WINCH 2 HYDR
SEALING RING	7101008	5	1	182	10 14 861 5	OIL SUMP PRE-ASS.
SEALING RING	7101021	3	1	176	10 13 845 0	FINAL CONTROL VALVE
SEALING RING	7101021	7	1	182	10 14 861 5	OIL SUMP PRE-ASS.
SEALING RING	7101021	10	1	183	50 04 624	OIL DRAIN PLUG
SEALING RING	7101022	23	4	44	10 56 070 1	TANK HYDR CPL
SEALING RING	7101022	33	1	254	11 24 114 0	COOLER INSTALLATION WATE
SEALING RING	710102514	56	4	261	11 24 114 1	COOLER INSTALLATION CHA
SEALING RING	710103008	29	1	275	11 24 114 5	ASSEMBLY INSTAL.

Description	Item	Pos.	Quantity	Sheet	Assembly	Description
SEALING RING	710103714	34	1	254	11 24 114 0	COOLER INSTALLATION WATE
SEALING RING	710103814	5	4	66	10 51 969 5	A-FRAME ERECTION HYDR
SEALING RING	710104514	31	2	614	54 02 702 14	ROPE DRUM CPL
SEALING RING	710121014	123	1	339	99 04 645 14	DRIVE
SEALING RING	7381225	14	1	175	10 14 768 6	POWER UNIT SUPPORT ATT
SEALING RING	7381225	13	1	200	10 12 948 0	OIL COOLER, PRE-ASSEMBLE
SEALING RING	7381367	2	1	101	90 74 418	REGULATING VALVE
SEALING RING	7381367	94	2	102	92 73 644	SEAL KIT REGULATING VALVE
SEALING RING	790295414	61	2	339	99 04 645 14	DRIVE
SEALING RING	790297914	40	1	548	59 21 280 14	SINGLE-ACTING CYL
SEALING RING	790347114	550	11	78	11 24 682 0	DISTRIBUTOR GEARBOX
SEALING RING	790347214	560	1	78	11 24 682 0	DISTRIBUTOR GEARBOX
SEALING RING	790403914	310	1	78	11 24 682 0	DISTRIBUTOR GEARBOX
SEALING RING	790444514	65	1	339	99 04 645 14	DRIVE
SEALING RING COVER	592178514	20	1	78	11 24 682 0	DISTRIBUTOR GEARBOX
SEALING SCREW	11100007	5	1	152	10 22 601 3	V PUMP
SEALING SCREW	11220932	4	1	142	10 22 650 5	V PUMP
SEALING SCREW	11221267	5	1	142	10 22 650 5	V PUMP
SEALING SET	10423993	900	1	20	10 59 143 5	DIRECTIONAL CONTROL VALV
SEALING SET	10524595	1	1	17	10 35 148 6	VALVE BLOCK
SEALING SET	11219356	4	1	80	11 21 990 2	DRIVING GEAR
SEALING SET	11896178	900	1	395	10 55 097 0	ROTARY FEED THROUGH HYD
SEALING SET	511493914	51	2	313	51 22 527 14	OIL MOTOR
SEALING SET	511614214	61	1	322	51 22 942 14	OIL MOTOR
SEALING SET	512259414	990	1	313	51 22 527 14	OIL MOTOR
SEALING SET	512259514	61	1	313	51 22 527 14	OIL MOTOR
SEALING SET	512401514	51	2	322	51 22 942 14	OIL MOTOR
SEALING SET CPL	10224159	3	1	159	10 22 358 1	PRESSURE FILTER
SEALING SET CPL	10351610	99	1	142	10 22 650 5	V PUMP
SEALING SET CPL	10595126	200	1	324	10 55 156 3	WINCH
SEALING SET CPL	502050814	990	1	258	51 22 501 14	OIL MOTOR
SEALING SET CPL	512256614	250	1	346	51 14 347 14	SG SAFETY BLOCK
SEALING SET CPL	512299214	990	1	347	51 22 991 14	OIL MOTOR
SEALING SET CPL	981967114	990	1	609	51 02 322 14	OIL MOTOR
SEALING SET CPL CYL	10352446	1	1	466	10 09 917 3	DOUBLE-ACTING CYL
SEALING SET CPL CYL	10352447	1	1	646	10 22 785 5	DOUBLE-ACTING CYL
SEALING SET CPL CYL	513319014	99	1	403	51 33 141 14	DOUBLE-ACTING CYL
SEALING SET CPL CYL	513319214	99	1	23	51 33 139 14	DOUBLE-ACTING CYL
SEALING SET CPL CYL	790230614	900	1	690	59 20 008 14	DOUBLE-ACTING CYL
SEALING SET CPL CYL	790401414	900	1	548	59 21 280 14	SINGLE-ACTING CYL
SEALING SET CPL CYL	790407714	900	1	67	59 21 041 14	DOUBLE-ACTING CYL
SEALING SET CPL CYL	790407814	900	1	653	59 21 042 14	DOUBLE-ACTING CYL
SEALING SET MOTOR	10493890	901	1	27	55 09 453 14	OIL MOTOR
SEAT	11226118	130	1	346	51 14 347 14	SG SAFETY BLOCK
SEAT FRAME	7024996	15	1	380	10 22 506 8	OPERATOR SEAT
SEAT FRAME	7028516	15	1	692	10 04 363 3	DRIVERS SEAT AIR-SUSPEN
SEAT FRAME	7029878	10	1	693	70 28 516	SEAT FRAME
SEAT PART CPL	7024981	12	1	380	10 22 506 8	OPERATOR SEAT
SEAT PART CPL	7027139	12	1	692	10 04 363 3	DRIVERS SEAT AIR-SUSPEN
SEAT VAT	10165637	65	1	380	10 22 506 8	OPERATOR SEAT
SECURING CHAIN	592291614	2	1	376	59 22 914 14	PLATFORM FIXATION CPL
SELF-LOADING SYSTEM HYD	10519712	2	1	644	10 51 971 3	SELF-LOADING SYSTEM RFK
SELF-LOADING SYSTEM HYD	10519738	2	1	650	11 23 619 7	SELF-LOADING SYSTEM RFK
SELF-LOADING SYSTEM RFK	10519713	642	1	4	01 38 281 14	LR 1300 SX
SELF-LOADING SYSTEM RFK	11236197	644	1	4	01 38 281 14	LR 1300 SX
SELF-LOADING SYSTEM RFK	11242988	647	1	4	01 38 281 14	LR 1300 SX
SELF-LOADING SYSTEM RFK	11895685	10	1	659	11 24 298 8	SELF-LOADING SYSTEM RFK
SELF-LOADING SYSTEM RFK	11895686	10	1	660	11 89 568 5	SELF-LOADING SYSTEM RFK
SELF-LOADING SYSTEM RFK	11895687	11	1	659	11 24 298 8	SELF-LOADING SYSTEM RFK
SELF-LOADING SYSTEM RFK	11895688	10	1	666	11 89 568 7	SELF-LOADING SYSTEM RFK

Description	Item	Pos.	Quantity	Sheet	Assembly	Description
SENSOR	10144038	7	1	275	11 24 114 5	ASSEMBLY INSTAL.
SENSOR	11008787	9	2	275	11 24 114 5	ASSEMBLY INSTAL.
SERIES TERMINAL	10550739	75	22	354	10 55 963 5	SWITCH CABINET X1
SERIES TERMINAL	602125114	22	7	34	10 56 645 8	TERMINAL BOX
SERIES TERMINAL	602151914	86	4	354	10 55 963 5	SWITCH CABINET X1
SERIES TERMINAL	602153214	51	2	708	10 56 013 7	MAINS SUPPLY BATTERY
SERIES TERMINAL	602153814	23	39	34	10 56 645 8	TERMINAL BOX
SERIES TERMINAL	602153814	74	13	354	10 55 963 5	SWITCH CABINET X1
SERIES TERMINAL	602153814	80	4	354	10 55 963 5	SWITCH CABINET X1
SERIES TERMINAL	693181114	71	3	354	10 55 963 5	SWITCH CABINET X1
SERRATED LOCK WASHER DI	425221314	9	1	31	10 53 048 9	FUSE HOLDER
SERRATED LOCK WASHER DI	425221314	16	4	311	10 51 969 7	NEEDLE LUFFING WINCH
SERRATED LOCK WASHER DI	425221314	20	2	633	10 51 176 9	NEEDLE BOOM CPL
SERRATED LOCK WASHER D	425225414	21	8	633	10 51 176 9	NEEDLE BOOM CPL
SERRATED LOCK WASHER DI	425225614	51	4	633	10 51 176 9	NEEDLE BOOM CPL
SET MAIN BEARINGS	10147362	51	1	171	10 14 032 7	DIESEL ENGINE
SG	90013762	10	2	341	10 51 968 2	SG SUPERSTRUCTURE
SG HYDR	10519683	2	1	341	10 51 968 2	SG SUPERSTRUCTURE
SG SAFETY BLOCK	511434714	2	1	344	10 55 216 1	TUBING HYDR
SG SUPERSTRUCTURE	10519682	27	1	2	01 38 281 14	LR 1300 SX
SG TACHOGENERATOR RFK	10522930	828	1	4	01 38 281 14	LR 1300 SX
SG TACHOGENERATOR RFK	10529522	3	1	706	10 52 293 0	SG TACHOGENERATOR RFK
SHACKLE	773930114	19	1	444	10 56 183 8	TOOL
SHACKLE	773930114	13	1	606	10 51 743 9	ROPE LUG CPL RFK
SHACKLE	773931314	20	1	531	11 24 475 9	A-FRAME 2 CPL
SHACKLE	773935814	28	4	650	11 23 619 7	SELF-LOADING SYSTEM RFK
SHACKLE	773939214	15	1	522	99 30 800 14	HOIST LIMIT SWITCH INSTAL.
SHACKLE	773954514	94	2	443	10 56 187 5	TOOL EQUIPMENT
SHACKLE	773954714	3	2	415	99 08 357 14	ATTACHMENT CHAIN
SHACKLE	773959914	21	1	531	11 24 475 9	A-FRAME 2 CPL
SHAFT	540272014	30	1	615	54 02 703 14	FLANGE CPL
SHAFT	957511614	16	1	541	11 29 938 4	MOUNTING PARTS
SHAFT	957714914	13	1	533	11 29 426 7	MOUNTING PARTS
SHAFT SEAL	10564158	14	1	313	51 22 527 14	OIL MOTOR
SHAFT SEAL	710069514	20	1	144	11 22 127 4	PUMP ELEMENT
SHAFT SEAL	710069514	20	1	151	10 35 161 0	SEALING SET CPL
SHAFT SEAL	790246414	20	1	154	11 21 593 6	PUMP ELEMENT
SHAFT SEAL	790295314	53	1	339	99 04 645 14	DRIVE
SHAFT SEAL	790563914	10	1	397	51 24 059 14	VARIABLE DISPLACEMENT MO
SHEET	10098789	22	1	300	11 24 922 2	COVER UNDERSIDE
SHEET	10099005	1	1	332	99 29 389 14	SIDE COMPONENT
SHEET	10099005	1	1	333	99 29 392 14	SIDE COMPONENT
SHEET	10099009	3	10	335	99 29 386 14	BRACKET CPL
SHEET	10099009	3	10	336	99 29 434 14	BRACKET CPL
SHEET	10119129	1	1	243	10 11 912 8	LOCKING PIECES
SHEET	10225695	37	2	282	11 24 409 0	PANELLING SUPERSTR. INSTA
SHEET	10226477	24	1	370	10 50 133 3	SLIDING DOOR
SHEET	10336707	1	3	335	99 29 386 14	BRACKET CPL
SHEET	10336707	1	3	336	99 29 434 14	BRACKET CPL
SHEET	10336708	2	8	335	99 29 386 14	BRACKET CPL
SHEET	10336708	2	8	336	99 29 434 14	BRACKET CPL
SHEET	10336722	4	3	335	99 29 386 14	BRACKET CPL
SHEET	10336722	4	3	336	99 29 434 14	BRACKET CPL
SHEET	10447259	39	1	368	10 22 645 4	DOOR ACCESSORIES
SHEET	10522189	7	1	373	59 22 871 14	FRONT WINDOW CPL
SHEET	10540513	24	2	650	11 23 619 7	SELF-LOADING SYSTEM RFK
SHEET	10545918	10	1	282	11 24 409 0	PANELLING SUPERSTR. INSTA
SHEET	10560687	10	1	300	11 24 922 2	COVER UNDERSIDE
SHEET	10560688	17	1	300	11 24 922 2	COVER UNDERSIDE
SHEET	10560690	16	1	300	11 24 922 2	COVER UNDERSIDE

Description	Item	Pos.	Quantity	Sheet	Assembly	Description
SHEET	10560691	11	1	300	11 24 922 2	COVER UNDERSIDE
SHEET	10560692	12	1	300	11 24 922 2	COVER UNDERSIDE
SHEET	10583559	15	1	300	11 24 922 2	COVER UNDERSIDE
SHEET	10583611	19	1	300	11 24 922 2	COVER UNDERSIDE
SHEET	10583612	20	1	300	11 24 922 2	COVER UNDERSIDE
SHEET	10583642	51	1	284	11 24 409 0	PANELLING SUPERSTR. INSTA
SHEET	10589204	58	2	450	11 23 820 3	PIVOT PIECE CPL
SHEET	11219851	12	2	495	11 23 292 2	SUPPORT CPL
SHEET	11219851	11	2	579	11 25 204 2	SUPPORT CPL
SHEET	11228227	25	1	650	11 23 619 7	SELF-LOADING SYSTEM RFK
SHEET	11231673	19	2	512	11 28 629 9	MOUNTING PARTS
SHEET	11244094	28	1	282	11 24 409 0	PANELLING SUPERSTR. INSTA
SHEET	11249223	13	1	300	11 24 922 2	COVER UNDERSIDE
SHEET	11249224	18	1	300	11 24 922 2	COVER UNDERSIDE
SHEET	11249225	21	1	300	11 24 922 2	COVER UNDERSIDE
SHEET	11249678	24	1	300	11 24 922 2	COVER UNDERSIDE
SHEET	971216403	44	2	541	11 29 938 4	MOUNTING PARTS
SHEET GASKET	592288114	31	1	373	59 22 871 14	FRONT WINDOW CPL
SHIM RING 55X65X1.5 ST	7380531	44	1	112	92 68 016	REPAIR KIT LOCK RING
SHIM RING DIN 988 16X22X1 S	422014001	23	3	617	54 02 705 14	DRIVE UNIT CPL
SHIM RING DIN 988 50X62X1.5	4002229	44	1	132	10 13 803 2	REPAIR KIT LOCK RING
SHOCK ABSORBER	10289994	55	1	382	10 28 999 3	VIBRATING SYSTEM
SHOCK ABSORBER	10289994	55	1	694	10 28 999 2	VIBRATING SYSTEM
SHUT OFF DEVICE	10526733	11	1	44	10 56 070 1	TANK HYDR CPL
SHUTDOWN VALVE	11067304	5	1	84	11 21 991 0	PUMP HOUSING
SHUTTLE VALVE	10124239	4	1	129	10 14 131 6	TERMINAL BOARD PRE-ASS.
SHUTTLE VALVE	10446566	14	1	399	11 22 473 8	ADJUSTMENT
SHUTTLE VALVE	11067305	6	1	84	11 21 991 0	PUMP HOUSING
SHUTTLE VALVE	11267447	1	1	90	11 06 730 5	SHUTTLE VALVE
SHUTTLE VALVE	511491914	7	2	8	11 29 618 6	SUPERSTRUCTURE HYDR
SHUTTLE VALVE	511491914	11	2	392	11 25 903 1	TUBING HYDR
SIDE COMPONENT	992938914	1	1	331	99 33 537 14	ROPE GUARD LUG CPL
SIDE COMPONENT	992939214	2	1	331	99 33 537 14	ROPE GUARD LUG CPL
SIDE PANE LEFT	592288514	43	1	366	10 35 250 8	CABIN
SIDE PANE RIGHT	592289114	49	1	366	10 35 250 8	CABIN
SIDE PANE RIGHT	592289214	50	1	366	10 35 250 8	CABIN
SIDE PLATE	11271456	2	2	593	79 04 871 14	BOTTOM HOOK BLOCK
SIDE PLATE	11274624	2	2	586	79 04 112 14	BOTTOM HOOK BLOCK
SIEVE	11239595	6	1	277	11 24 240 8	UREA CONTAINER
SIGN	10099300	8	1	608	10 51 726 2	TUBING HYDR
SIGN	10224930	11	1	582	99 38 329 14	TIP BOOM CPL
SIGN	10523125	38	2	450	11 23 820 3	PIVOT PIECE CPL
SIGN	10533589	12	1	340	11 22 703 7	ROPES LUG MAIN BOOM
SIGN	10575705	38	1	714	10 52 155 9	MODULE REFUELLING SYSTE
SIGN	10584544	15	1	44	10 56 070 1	TANK HYDR CPL
SIGN	11227046	11	1	340	11 22 703 7	ROPES LUG MAIN BOOM
SIGN	11232788	22	1	699	11 23 189 1	AIR CONDITIONING UNIT RFK
SIGN	11274707	17	1	275	11 24 114 5	ASSEMBLY INSTAL.
SIGN	11274708	18	1	275	11 24 114 5	ASSEMBLY INSTAL.
SIGN	606644414	27	1	566	10 57 624 5	CABLE LOOM
SIGN	773193414	39	1	450	11 23 820 3	PIVOT PIECE CPL
SIGN	773193414	23	1	459	10 58 193 7	GRATING CPL
SIGN	773194314	40	2	450	11 23 820 3	PIVOT PIECE CPL
SIGN	773195214	317	1	311	10 51 969 7	NEEDLE LUFFING WINCH
SIGN	773195214	317	1	606	10 51 743 9	ROPE LUG CPL RFK
SIGN	790282814	2	1	580	91 89 071 14	TIP BOOM MODIFICATION
SIGN	790380214	22	1	544	10 53 145 5	TILTING-BACK SUPPORT NEE
SIGN	790422414	50	1	577	99 48 521 14	TIP BOOM CPL
SIGN LOCATIONS	11218695	52	1	2	01 38 281 14	LR 1300 SX
SIGN LOCATIONS	11266901	110	1	482	11 24 570 3	BOOM INTERMEDIATE SECTIO

Description	Item	Pos.	Quantity	Sheet	Assembly	Description
SIGN LOCATIONS	11266901	110	1	498	11 24 570 9	BOOM INTERMEDIATE SECTIO
SIGN LOCATIONS	11266901	110	1	504	11 24 571 5	BOOM INTERMEDIATE SECTIO
SIGN LOCATIONS	11266901	110	1	552	11 24 084 8	BOOM INTERMEDIATE SECTIO
SIGN LOCATIONS	11266901	110	1	559	11 24 162 5	BOOM INTERMEDIATE SECTIO
SIGN LOCATIONS	11266901	110	1	562	11 24 163 0	BOOM INTERMEDIATE SECTIO
SIGN LOCATIONS	11266945	110	1	451	11 23 820 3	PIVOT PIECE CPL
SIGN LOCATIONS	11266945	110	1	523	11 24 618 2	NEEDLE ADD-ON PARTS
SIGN LOCATIONS	11269727	110	1	509	11 24 132 4	BOOM HEAD CPL
SIGN LOCATIONS	11269727	110	1	564	11 24 263 6	NEEDLE HEAD CPL
SIGN LOCATIONS	11269906	110	1	633	10 51 176 9	NEEDLE BOOM CPL
SIGNAL LAMP	10524927	100	1	352	11 27 973 6	CABIN EL
SIGNAL LAMP	10524927	37	2	474	10 53 120 7	A-FRAME ELECTRICS
SINGLE HOOK	10522845	1	1	584	79 03 862 14	LOAD HOOK
SINGLE HOOK	11481162	1	1	589	11 27 463 8	HANGER
SINGLE-ACTING CYL	592128014	2	2	547	10 53 146 1	TUBING HYDR
SIPHON PIPE	11236511	45	1	167	10 57 532 2	INTAKE PIPE OIL CPL
SIPHON PIPE	11236513	47	1	167	10 57 532 2	INTAKE PIPE OIL CPL
SIPHON PIPE	11236514	43	1	167	10 57 532 2	INTAKE PIPE OIL CPL
SIPHON PIPE	11236515	41	1	167	10 57 532 2	INTAKE PIPE OIL CPL
SIPHON PIPE	11236517	40	1	167	10 57 532 2	INTAKE PIPE OIL CPL
SIPHON PIPE	11236518	46	1	167	10 57 532 2	INTAKE PIPE OIL CPL
SIPHON PIPE	592257814	44	1	167	10 57 532 2	INTAKE PIPE OIL CPL
SLACK ROPE PROTECTION	993584114	45	1	633	10 51 176 9	NEEDLE BOOM CPL
SLEDGE HAMMER 5000G	885040114	13	1	444	10 56 183 8	TOOL
SLEEVE	10123532	2	1	193	10 13 728 5	CYLINDER HEAD
SLEEVE	10447748	4	6	25	10 44 510 5	QUICK RELEASE FITTING
SLEEVE	10447748	4	4	400	10 44 510 2	QUICK RELEASE FITTING
SLEEVE	10447748	4	4	401	10 44 510 1	QUICK RELEASE FITTING
SLEEVE	11267440	2	1	89	11 06 730 4	SHUTDOWN VALVE
SLEEVE	11267453	3	1	91	11 26 744 7	SHUTTLE VALVE
SLEEVE	9267340	10	1	98	92 67 343	VENTILATION VALVE
SLEEVE 14/25X26 S235JRH;EN	11276612	5	1	261	11 24 114 1	COOLER INSTALLATION CHA
SLEEVE 20/13.5X44 AISI 316	10571340	14	2	254	11 24 114 0	COOLER INSTALLATION WATE
SLEEVE 8X0.4	501507314	15	1	614	54 02 702 14	ROPE DRUM CPL
SLEEVE CONTACT	6003031	47	6	351	11 27 973 6	CABIN EL
SLEEVE CONTACT	6003031	95	6	352	11 27 973 6	CABIN EL
SLEEVE NG32/RD60/23X85	11226016	20	1	346	51 14 347 14	SG SAFETY BLOCK
SLEW RING ROLLER BEARING	990706901	10	1	51	10 51 963 1	SUPERSTR. SLEWING RING IN
SLEWING ANGLE TRANSDUCE	10528626	31	1	707	10 52 952 2	SG TACHOGENERATOR RFK
SLIDE SEAT GUIDE	10289990	70	1	380	10 22 506 8	OPERATOR SEAT
SLIDE SEAT GUIDE	10289991	70	1	692	10 04 363 3	DRIVERS SEAT AIR-SUSPEN
SLIDE SEAT GUIDE	7024987	71	1	380	10 22 506 8	OPERATOR SEAT
SLIDEWAY 8/14X35 POM	11273242	17	4	282	11 24 409 0	PANELLING SUPERSTR. INSTA
SLIDING DISC	9889809	15	1	104	10 13 975 2	REPAIR SET SWIVEL YOKE
SLIDING DISC	9889809	15	1	105	98 89 984	REPAIR KIT DRIVING MECHAN
SLIDING DISC	9889809	15	1	109	98 89 983	REPAIR KIT DRIVING MECHAN
SLIDING DOOR	10501333	3	1	366	10 35 250 8	CABIN
SLIDING WINDOW	10224413	1	1	370	10 50 133 3	SLIDING DOOR
SLIDING WINDOW	11250970	3	1	372	11 27 901 2	DOOR PANE
SLING	805090714	18	1	531	11 24 475 9	A-FRAME 2 CPL
SLING	805091714	19	1	531	11 24 475 9	A-FRAME 2 CPL
SLOTTED STRIP	11234375	57	2	302	11 24 483 7	MOUNTING PARTS SUPERST
SLOTTED STRIP	11244040	52	2	302	11 24 483 7	MOUNTING PARTS SUPERST
SLOTTED STRIP	11247029	28	1	302	11 24 483 7	MOUNTING PARTS SUPERST
SLOTTED STRIP	11247792	31	9	302	11 24 483 7	MOUNTING PARTS SUPERST
SLOTTED STRIP	11247799	32	2	302	11 24 483 7	MOUNTING PARTS SUPERST
SLOTTED TAPE STEEL	11234799	15	2	164	11 24 113 8	MOTOR BEARING CPL
SNAP HOOK	744010414	5	2	415	99 08 357 14	ATTACHMENT CHAIN
SNAP HOOK	744011114	12	5	286	11 24 409 1	COVERS
SNAP RING 140	747460514	3	2	638	91 49 419 14	ROPE PULLEY CPL

Description	Item	Pos.	Quantity	Sheet	Assembly	Description
SNAP RING 5 X 135	10352383	180	2	670	59 21 826 14	SUPPORT CYL
SNAP RING 52X2 FST	4980482	7	2	190	10 14 351 1	PISTON CPL.
SNAP RING 5X175	10352382	175	1	669	59 21 826 14	SUPPORT CYL
SNAP RING 6 X 172	10352384	185	1	670	59 21 826 14	SUPPORT CYL
SNIB	592291014	94	1	367	10 35 250 8	CABIN
SOCKET	10520078	131	1	29	11 24 519 0	SUPERSTRUCTURE EL
SOCKET	6205239	13	1	160	11 24 448 7	CENTRAL POWER UNIT EL
SOCKET DUST-PROOF	7364488	4	1	446	51 17 043 14	QUICK-FITTING THREAD COU
SOCKET DUST-PROOF	7615441	1	1	24	51 05 719 14	QUICK-FITTING THREAD COU
SOCKET HEAD SCREW	11215951	3	4	148	10 35 160 3	CONTROL VALVE
SOCKET HEAD SCREW	11215951	3	4	157	10 11 497 5	CONTROL VALVE
SOCKET HEAD SCREW	11217079	5	3	82	11 21 992 7	COVER
SOCKET HEAD SCREW	11217079	5	3	83	11 21 992 9	COVER
SOCKET HEAD SCREW	11219373	4	8	92	11 21 935 0	PUMP COVER
SOCKET HEAD SCREW	11219936	11	8	94	11 21 991 8	BEARING FLANGE
SOCKET HEAD SCREW	11220320	20	2	399	11 22 473 8	ADJUSTMENT
SOCKET HEAD SCREW	11220320	21	2	399	11 22 473 8	ADJUSTMENT
SOCKET HEAD SCREW	11224767	22	4	399	11 22 473 8	ADJUSTMENT
SOCKET HEAD SCREW DIN 6	4980750	46	1	104	10 13 975 2	REPAIR SET SWIVEL YOKE
SOCKET HEAD SCREW DIN 69	407203008	65	4	167	10 57 532 2	INTAKE PIPE OIL CPL
SOCKET HEAD SCREW DIN 6	407201308	37	4	570	11 28 774 6	MOUNTING PARTS
SOCKET HEAD SCREW DIN 79	4072083	61	32	44	10 56 070 1	TANK HYDR CPL
SOCKET HEAD SCREW DIN 7	408301208	7	8	365	11 22 369 1	FOOT PEDAL EL INSTALLATIO
SOCKET HEAD SCREW DIN 9	11223234	20	8	339	99 04 645 14	DRIVE
SOCKET HEAD SCREW DIN 9	11226139	190	4	346	51 14 347 14	SG SAFETY BLOCK
SOCKET HEAD SCREW DIN 91	10336668	8	30	408	10 55 876 0	CRAWLER CARRIER RIGHT CP
SOCKET HEAD SCREW DIN 91	10336668	8	30	417	10 55 876 1	CRAWLER CARRIER LEFT CP
SOCKET HEAD SCREW DIN 91	11226137	180	4	346	51 14 347 14	SG SAFETY BLOCK
SOCKET HEAD SCREW ISO 1	11600879	4	1	208	10 15 315 1	PRESSURE ADAPTER
SOCKET HEAD SCREW ISO 1	11600879	3	1	209	10 14 114 0	RK PRESSURE ADAPTER
SOCKET HEAD SCREW ISO 1	11600879	3	1	213	10 13 543 4	PRESSURE ADAPTER FASTEN
SOCKET HEAD SCREW ISO 1	4981218	43	8	99	10 11 835 7	REPAIR KIT CONNECTION HO
SOCKET HEAD SCREW ISO 1	4981218	43	4	106	98 89 833	RK CYLINDER+CONTROL PLAT
SOCKET HEAD SCREW ISO 1	4981218	43	4	110	98 89 832	RK CYLINDER+CONTROL PLAT
SOCKET HEAD SCREW ISO 1	11082116	3	1	207	10 15 286 7	INJECTOR WITH FASTENING
SOCKET HEAD SCREW ISO 1	11082116	2	1	212	10 13 543 2	INJECTOR FASTENING
SOCKET HEAD SCREW ISO 47	4002442	82	12	412	96 93 178 01	TRACTION DRIVE
SOCKET HEAD SCREW ISO 47	4002442	303	2	652	10 51 973 8	SELF-LOADING SYSTEM HYD
SOCKET HEAD SCREW ISO 47	4043014	300	2	652	10 51 973 8	SELF-LOADING SYSTEM HYD
SOCKET HEAD SCREW ISO 47	404208814	21	8	614	54 02 702 14	ROPE DRUM CPL
SOCKET HEAD SCREW ISO 4	4043124	60	4	75	11 24 773 5	HYDR POWER UNIT
SOCKET HEAD SCREW ISO 4	4043124	17	12	412	96 93 178 01	TRACTION DRIVE
SOCKET HEAD SCREW ISO 47	404208514	430	58	78	11 24 682 0	DISTRIBUTOR GEARBOX
SOCKET HEAD SCREW ISO 4	4900981	62	24	412	96 93 178 01	TRACTION DRIVE
SOCKET HEAD SCREW ISO 47	485558914	38	4	570	11 28 774 6	MOUNTING PARTS
SOCKET HEAD SCREW ISO 4	4001622	61	12	169	11 24 113 9	MOTOR PRE-ASSEMBLY
SOCKET HEAD SCREW ISO 4	4001622	3	4	206	10 15 360 6	REPAIR SET DRIVE
SOCKET HEAD SCREW ISO 47	10539505	86	4	276	11 24 114 5	ASSEMBLY INSTAL.
SOCKET HEAD SCREW ISO 47	10539505	15	8	308	10 52 656 0	MOUNTING PARTS
SOCKET HEAD SCREW ISO 4	4630200	63	4	44	10 56 070 1	TANK HYDR CPL
SOCKET HEAD SCREW ISO 4	4630200	8	8	344	10 55 216 1	TUBING HYDR
SOCKET HEAD SCREW ISO 4	4630200	11	15	412	96 93 178 01	TRACTION DRIVE
SOCKET HEAD SCREW ISO 4	4043133	53	4	75	11 24 773 5	HYDR POWER UNIT
SOCKET HEAD SCREW ISO 4	4900980	302	2	652	10 51 973 8	SELF-LOADING SYSTEM HYD
SOCKET HEAD SCREW ISO 47	10539508	22	6	614	54 02 702 14	ROPE DRUM CPL
SOCKET HEAD SCREW ISO 47	4600385	62	8	168	10 58 017 0	RETURN PIPE
SOCKET HEAD SCREW ISO 47	4600385	5	2	194	10 14 843 8	ROCKER ARM BRACKET CPL.
SOCKET HEAD SCREW ISO 47	4600385	7	15	242	10 11 557 7	FLYWHEEL HOUSING MOUNT
SOCKET HEAD SCREW ISO 47	404313401	58	4	10	11 29 618 6	SUPERSTRUCTURE HYDR
SOCKET HEAD SCREW ISO 4	10539530	22	12	339	99 04 645 14	DRIVE

Description	Item	Pos.	Quantity	Sheet	Assembly	Description
SOCKET HEAD SCREW ISO 47	4980938	20	2	103	10 13 333 4	COVER
SOCKET HEAD SCREW ISO 4	4043163	21	8	95	10 11 834 9	DOUBLE V-PUMP
SOCKET HEAD SCREW ISO 4	4043163	20	2	137	10 12 987 4	THROUGH DRIVE
SOCKET HEAD SCREW ISO 47	485555314	12	2	60	10 56 067 3	BATTERY INSTALLATION CPL
SOCKET HEAD SCREW ISO 4	4043003	30	8	320	10 51 968 6	LUG SUPERSTRUCTURE CPL
SOCKET HEAD SCREW ISO 4	4980012	6	2	242	10 11 557 7	FLYWHEEL HOUSING MOUNT
SOCKET HEAD SCREW ISO 4	10012659	23	8	95	10 11 834 9	DOUBLE V-PUMP
SOCKET HEAD SCREW ISO 47	10539520	45	8	541	11 29 938 4	MOUNTING PARTS
SOCKET HEAD SCREW ISO 4	4600505	57	16	10	11 29 618 6	SUPERSTRUCTURE HYDR
SOCKET HEAD SCREW ISO 47	10539524	29	1	58	10 58 163 4	CABIN SUSPENSION CPL
SOCKET HEAD SCREW ISO 4	4600513	20	4	138	10 13 000 5	THROUGH DRIVE
SOCKET HEAD SCREW ISO 4	4600513	20	4	139	10 13 235 7	CONSTRUCTION KIT OUTPUT
SOCKET HEAD SCREW ISO 4	4600513	20	4	140	10 13 452 1	THROUGH DRIVE
SOCKET HEAD SCREW ISO 4	4600513	20	4	141	10 13 806 8	CONSTRUCTION KIT OUTPUT
SOCKET HEAD SCREW ISO 4	10544044	751	4	435	11 26 260 6	WINCH 1 HYDR
SOCKET HEAD SCREW ISO 4	10544050	18	16	392	11 25 903 1	TUBING HYDR
SOCKET HEAD SCREW ISO 4	10544065	26	8	58	10 58 163 4	CABIN SUSPENSION CPL
SOCKET HEAD SCREW ISO 4	10544068	63	4	167	10 57 532 2	INTAKE PIPE OIL CPL
SOCKET HEAD SCREW ISO 47	10530200	440	12	78	11 24 682 0	DISTRIBUTOR GEARBOX
SOCKET HEAD SCREW ISO 4	10017870	25	4	129	10 14 131 6	TERMINAL BOARD PRE-ASS.
SOCKET HEAD SCREW ISO 47	10544105	12	48	341	10 51 968 2	SG SUPERSTRUCTURE
SOCKET HEAD SCREW ISO 4	10544092	63	4	75	11 24 773 5	HYDR POWER UNIT
SOCKET HEAD SCREW ISO 4	10544093	62	4	75	11 24 773 5	HYDR POWER UNIT
SOCKET HEAD SCREW ISO 47	10544121	17	8	644	10 51 971 3	SELF-LOADING SYSTEM RFK
SOCKET HEAD SCREW ISO 4	10544113	16	8	644	10 51 971 3	SELF-LOADING SYSTEM RFK
SOCKET HEAD SCREW ISO 47	10228541	20	2	118	10 12 942 0	PRESSURE REDUCTION VALV
SOCKET HEAD SCREW ISO 4	10539448	57	12	34	10 56 645 8	TERMINAL BOX
SOCKET HEAD SCREW ISO 4	10278936	6	40	62	10 56 069 4	MODULES INSTALLATION
SOCKET HEAD SCREW ISO 47	404214114	10	4	61	11 31 093 2	LIMIT SWITCH INSTALLATION
SOCKET HEAD SCREW ISO 4	10539454	26	4	512	11 28 629 9	MOUNTING PARTS
SOCKET HEAD SCREW ISO 4	10539454	9	8	513	11 28 610 5	RETAINING DEVICE CPL
SOCKET HEAD SCREW ISO 47	4600552	59	20	10	11 29 618 6	SUPERSTRUCTURE HYDR
SOCKET HEAD SCREW ISO 4	11250990	420	4	78	11 24 682 0	DISTRIBUTOR GEARBOX
SOCKET HEAD SCREW ISO 4	10539462	74	4	113	92 73 187	REPAIR KIT MAGNET
SOCKET HEAD SCREW ISO 47	404302914	6	4	312	10 51 969 8	NEEDLE LUFFING WINCH HYD
SOCKET HEAD SCREW ISO 47	404302914	7	4	321	10 51 968 7	MAIN LUG HYDR
SOCKET HEAD SCREW ISO 4	10539467	28	2	473	11 24 444 4	A-FRAME 1 CPL
SOCKET HEAD SCREW ISO 4	404203514	13	4	465	10 51 959 1	TUBING HYDR
SOCKET HEAD SCREW ISO 4	10446871	47	6	408	10 55 876 0	CRAWLER CARRIER RIGHT CP
SOCKET HEAD SCREW ISO 4	10446871	47	6	417	10 55 876 1	CRAWLER CARRIER LEFT CP
SOCKET HEAD SCREW ISO 4	404250914	3	1	245	10 12 797 9	LOCKING PIECES
SOCKET HEAD SCREW ISO 4	404250914	3	1	251	10 13 307 7	ROTATIONAL SPEED SENSOR
SOCKET HEAD SCREW ISO 4	404250914	51	3	615	54 02 703 14	FLANGE CPL
SOCKET HEAD SCREW ISO 4	404251014	60	3	254	11 24 114 0	COOLER INSTALLATION WATE
SOCKET HEAD SCREW ISO 4	404251014	91	4	451	11 23 820 3	PIVOT PIECE CPL
SOCKET HEAD SCREW ISO 4	404251014	40	4	525	11 24 336 5	PIVOT PIECE NEEDLE CPL
SOCKET HEAD SCREW ISO 4	404251014	22	4	526	10 53 140 9	PIVOT PIECE EL
SOCKET HEAD SCREW ISO 4	404251014	36	4	570	11 28 774 6	MOUNTING PARTS
SOCKET HEAD SCREW ISO 4	404251414	61	6	254	11 24 114 0	COOLER INSTALLATION WATE
SOCKET HEAD SCREW ISO 4	10219869	22	4	126	10 14 360 7	REPAIR SET SWIVEL BEARIN
SOCKET HEAD SCREW ISO 4	10539482	43	8	533	11 29 426 7	MOUNTING PARTS
SOCKET HEAD SCREW ISO 4	10539482	36	8	541	11 29 938 4	MOUNTING PARTS
SOCKET HEAD SCREW ISO 4	10539483	40	8	284	11 24 409 0	PANELLING SUPERSTR. INSTA
SOCKET HEAD SCREW ISO 4	10539483	9	4	363	91 65 251 14	CABLE DUCT CABINET 1
SOCKET HEAD SCREW ISO 47	4043082	14	2	236	10 14 013 6	EXHAUST TC MOUNTING
SOCKET HEAD SCREW ISO 4	404206414	31	8	350	11 29 327 3	CABIN CPL
SOCKET HEAD SCREW ISO 4	485556314	23	4	614	54 02 702 14	ROPE DRUM CPL
SOCKET HEAD SCREW ISO 4	404206614	2	1	206	10 15 360 6	REPAIR SET DRIVE
SOCKET HEAD SCREW ISO 4	404206614	8	4	698	11 22 037 2	FOOT PEDAL EL INSTALLATIO
SOCKET HEAD SCREW ISO 47	4980920	21	8	133	10 12 226 2	REGULATION REPAIR KIT

Description	Item	Pos.	Quantity	Sheet	Assembly	Description
SOCKET HEAD SCREW ISO 47	4980840	20	4	101	90 74 418	REGULATING VALVE
SOCKET HEAD SCREW ISO 4	10539485	18	6	617	54 02 705 14	DRIVE UNIT CPL
SOCKET HEAD SCREW ISO 4	10539486	50	1	615	54 02 703 14	FLANGE CPL
SOCKET HEAD SCREW ISO 4	10539488	25	4	320	10 51 968 6	LUG SUPERSTRUCTURE CPL
SOCKET HEAD SCREW ISO 47	11170484	26	2	129	10 14 131 6	TERMINAL BOARD PRE-ASS.
SOCKET HEAD SCREW ISO 47	11170484	26	2	135	10 13 803 4	GASKET KIT INT.FLANGE
SOCKET HEAD SCREW ISO 4	10539492	23	2	485	11 28 390 8	BOOM ACCESS
SOCKET HEAD SCREW ISO 4	10539492	23	2	499	11 28 583 8	BOOM ACCESS
SOCKET HEAD SCREW ISO 4	10539492	23	2	505	11 28 626 1	BOOM ACCESS
SOCKET HEAD SCREW ISO 4	10514797	17	6	617	54 02 705 14	DRIVE UNIT CPL
SOCKET HEAD SCREW ISO 47	404333614	61	12	75	11 24 773 5	HYDR POWER UNIT
SOCKET HEAD SCREW ISO476	11290853	460	1	78	11 24 682 0	DISTRIBUTOR GEARBOX
SOCKET HEAD SCREW ISO476	11290854	465	1	78	11 24 682 0	DISTRIBUTOR GEARBOX
SOCKET HEAD SCREW M10X3	10355735	27	4	154	11 21 593 6	PUMP ELEMENT
SOCKET HEAD SCREW M5X55	11219069	5	2	272	10 55 091 1	ADD-ON PRELIMINARY FUEL F
SOCKET HEAD SCREW UN 120	10225045	4	4	31	10 53 048 9	FUSE HOLDER
SOCKET SHELL	10021236	35	2	628	99 24 978 14	BOOM ELECTRICS
SOCKET SHELL	693155014	50	1	566	10 57 624 5	CABLE LOOM
SOCKET SHELL	693155014	30	1	578	97 14 959 03	HOIST LIMIT SWITCH EL
SOCKET SHELL	693155014	30	1	583	91 95 871 14	HOIST LIMIT SWITCH EL
SOCKET SHELL	693155014	30	1	634	10 51 167 1	LIMIT SWITCH EL
SOFT FACE HAMMER 60G	885045214	18	1	444	10 56 183 8	TOOL
SOFTWARE	10524422	401	1	3	01 38 281 14	LR 1300 SX
SOLENOID VALVE	10336968	120	1	346	51 14 347 14	SG SAFETY BLOCK
SOLENOID VALVE	11226980	6	1	657	59 21 584 14	LOWERING BRAKE VALVE
SOLENOID VALVE	11254299	1	1	702	10 56 536 7	SOLENOID VALVE BUILT-IN KI
SOLENOID VALVE BUILT-IN KI	10565367	1	1	701	10 56 536 8	SOLENOIDVALVE BUILT-IN KIT
SOLENOIDVALVE BUILT-IN KIT	10565368	12	1	699	11 23 189 1	AIR CONDITIONING UNIT RFK
SOUND REDUCTION	981953714	992	1	4	01 38 281 14	LR 1300 SX
SOUNDER	11226627	83	1	352	11 27 973 6	CABIN EL
SPACER	11262039	10	1	705	11 26 771 6	MOUNTING PARTS
SPACER PIECE	10227757	17	4	422	99 26 718 14	PEDESTAL
SPACER PIECE	11216088	32	1	58	10 58 163 4	CABIN SUSPENSION CPL
SPACER PIECE	289064214	24	4	320	10 51 968 6	LUG SUPERSTRUCTURE CPL
SPARE ELEMENT	10136801	1	1	180	10 13 680 0	CRANKCASE BREATHER
SPECIAL THREADED UNION	10446305	28	1	75	11 24 773 5	HYDR POWER UNIT
SPECIAL THREADED UNION	289031614	13	1	435	11 26 260 6	WINCH 1 HYDR
SPECIAL THREADED UNION	289031614	13	1	441	11 26 261 1	WINCH 2 HYDR
SPHERICAL BEARING	746911614	18	4	512	11 28 629 9	MOUNTING PARTS
SPHERICAL BEARING	746913614	17	1	650	11 23 619 7	SELF-LOADING SYSTEM RFK
SPHERICAL BEARING	746925314	13	1	690	59 20 008 14	DOUBLE-ACTING CYL
SPHERICAL BEARING	746925314	14	1	690	59 20 008 14	DOUBLE-ACTING CYL
SPHERICAL BEARING	790401014	25	1	548	59 21 280 14	SINGLE-ACTING CYL
SPHERICAL WASHER DIN 631	11622278	3	1	208	10 15 315 1	PRESSURE ADAPTER
SPHERICAL WASHER DIN 631	11622278	2	1	213	10 13 543 4	PRESSURE ADAPTER FASTEN
SPHERICAL WASHER DIN 631	10036473	4	1	207	10 15 286 7	INJECTOR WITH FASTENING
SPHERICAL WASHER DIN 631	10036473	2	1	209	10 14 114 0	RK PRESSURE ADAPTER
SPHERICAL WASHER DIN 631	10036473	3	1	212	10 13 543 2	INJECTOR FASTENING
SPIRAL BACK-UP RING	540273214	20	1	617	54 02 705 14	DRIVE UNIT CPL
SPIRAL DOWEL PIN DIN 7344 5	11306379	6	1	677	11 23 623 3	POCKET LOCK
SPIRAL SPRING HINGE PLATE	10509153	32	4	619	10 55 372 1	ROOF RAILING RFK
SPIRIT LEVEL	714000808	5	1	384	97 07 857 03	SPIRIT LEVEL ASSY.
SPIRIT LEVEL	714000808	12	1	665	11 89 568 6	SELF-LOADING SYSTEM RFK
SPIRIT LEVEL ASSY.	970785703	44	1	350	11 29 327 3	CABIN CPL
SPLINE SHAFT	790346614	120	1	78	11 24 682 0	DISTRIBUTOR GEARBOX
SPLIT PIN ISO 1234 10X100 A4	433010614	30	3	582	99 38 329 14	TIP BOOM CPL
SPLIT PIN ISO 1234 10X63 A4	433014214	21	2	473	11 24 444 4	A-FRAME 1 CPL
SPLIT PIN ISO 1234 10X80 A4	433010314	20	2	64	10 51 969 4	A-FRAME ERECTION CYL INST
SPLIT PIN ISO 1234 10X80 A4	433010314	2	2	493	91 85 910 14	ANCHORING ROD CPL
SPLIT PIN ISO 1234 10X80 A4	433010314	2	2	501	91 85 911 14	ANCHORING ROD CPL

Description	Item	Pos.	Quantity	Sheet	Assembly	Description
SPLIT PIN ISO 1234 10X80 A4	433010314	2	6	507	99 03 609 14	ANCHORING ROD CPL
SPLIT PIN ISO 1234 10X80 A4	433010314	50	2	512	11 28 629 9	MOUNTING PARTS
SPLIT PIN ISO 1234 10X80 A4	433010314	33	10	535	99 26 359 14	ANCHORING ROD CPL
SPLIT PIN ISO 1234 10X80 A4	433010314	20	12	542	10 59 968 1	ANCHORING ROD CPL
SPLIT PIN ISO 1234 10X80 A4	433010314	18	10	571	99 26 362 14	ANCHORING ROD CPL
SPLIT PIN ISO 1234 10X80 A4	433010314	32	4	577	99 48 521 14	TIP BOOM CPL
SPLIT PIN ISO 1234 10X80 A4	433010314	25	4	644	10 51 971 3	SELF-LOADING SYSTEM RFK
SPLIT PIN ISO 1234 10X80 A4	433010314	21	1	650	11 23 619 7	SELF-LOADING SYSTEM RFK
SPLIT PIN ISO 1234 13X112 A4	433011114	21	2	644	10 51 971 3	SELF-LOADING SYSTEM RFK
SPLIT PIN ISO 1234 5X32	433006314	4	2	414	10 50 179 5	ACCESS CPL
SPLIT PIN ISO 1234 5X32	433006314	7	2	516	11 28 357 6	MOUNTING PARTS
SPLIT PIN ISO 1234 5X45	433006614	4	4	63	99 23 451 14	PIVOT BOLT INSTALLATION
SPLIT PIN ISO 1234 5X50	433006714	12	8	311	10 51 969 7	NEEDLE LUFFING WINCH
SPLIT PIN ISO 1234 6.3X32 ST	433007508	31	4	58	10 58 163 4	CABIN SUSPENSION CPL
SPLIT PIN ISO 1234 6.3X45	433007708	25	4	58	10 58 163 4	CABIN SUSPENSION CPL
SPLIT PIN ISO 1234 6.3X45 A4	433007714	47	2	633	10 51 176 9	NEEDLE BOOM CPL
SPLIT PIN ISO 1234 6.3X50 A4	433007814	22	2	633	10 51 176 9	NEEDLE BOOM CPL
SPLIT PIN ISO 1234 6.3X56 A4	433007914	18	8	544	10 53 145 5	TILTING-BACK SUPPORT NEE
SPLIT PIN ISO 1234 6.3X56 A4	433007914	28	1	570	11 28 774 6	MOUNTING PARTS
SPLIT PIN ISO 1234 6.3X63	433008108	26	4	473	11 24 444 4	A-FRAME 1 CPL
SPLIT PIN ISO 1234 6.3X63	433008108	33	2	521	99 23 398 14	ROLLER SET
SPLIT PIN ISO 1234 6.3X63	433008108	29	4	570	11 28 774 6	MOUNTING PARTS
SPLIT PIN ISO 1234 6.3X71 A4	433008214	16	4	64	10 51 969 4	A-FRAME ERECTION CYL INST
SPLIT PIN ISO 1234 8X100 A4	433009514	14	2	460	99 30 060 14	ANCHORING ROD CPL
SPLIT PIN ISO 1234 8X100 A4	433009514	15	8	476	99 26 417 14	ANCHORING ROD CPL
SPLIT PIN ISO 1234 8X100 A4	433009514	14	2	492	99 24 404 14	ANCHORING ROD CPL
SPLIT PIN ISO 1234 8X100 A4	433009514	14	2	500	99 24 405 14	ANCHORING ROD CPL
SPLIT PIN ISO 1234 8X100 A4	433009514	14	6	506	99 24 406 14	ANCHORING ROD CPL
SPLIT PIN ISO 1234 8X100 A4	433009514	14	6	519	99 24 594 14	ANCHORING ROD CPL
SPLIT PIN ISO 1234 8X50 A4	433008814	48	2	512	11 28 629 9	MOUNTING PARTS
SPLIT PIN ISO 1234 8X50 A4	433008814	25	4	582	99 38 329 14	TIP BOOM CPL
SPLIT PIN ISO 1234 8X56 A4	433009014	31	4	164	11 24 113 8	MOTOR BEARING CPL
SPLIT PIN ISO 1234 8X56 A4	433009014	30	2	637	99 10 116 14	ROPE GUIDE
SPLIT PIN ISO 1234 8X63 A4	433009114	15	2	58	10 58 163 4	CABIN SUSPENSION CPL
SPLIT PIN ISO 1234 8X63 A4	433009114	49	2	512	11 28 629 9	MOUNTING PARTS
SPLIT PIN ISO 1234 8X63 A4	433009114	38	1	533	11 29 426 7	MOUNTING PARTS
SPLIT PIN ISO 1234 8X63 A4	433009114	19	2	577	99 48 521 14	TIP BOOM CPL
SPLIT PIN ISO 1234 8X80 A4	433009414	32	4	535	99 26 359 14	ANCHORING ROD CPL
SPLIT PIN ISO 1234 8X80 A4	433009414	12	1	537	99 35 031 14	ROPE GUARD CPL
SPLIT PIN ISO 1234 8X90	433009714	33	4	644	10 51 971 3	SELF-LOADING SYSTEM RFK
SPOOL	11600281	3	1	89	11 06 730 4	SHUTDOWN VALVE
SPRING	10287741	6	1	156	10 28 766 5	ADJUSTING PIECE
SPRING	10324860	2	1	147	11 49 032 3	CYLINDER
SPRING CUP ABOVE	9074480	7	4	192	10 13 728 6	CYLINDER HEAD PRE-ASS.
SPRING ELEMENT	10032001	7	1	273	10 30 300 7	FUEL PREFILTER
SPRING LOADED MULTI-DISC	502037201	80	1	412	96 93 178 01	TRACTION DRIVE
SPRING PLUG	592291714	3	1	376	59 22 914 14	PLATFORM FIXATION CPL
SPRING PLUG DIN 11024 2.5	433206014	14	1	522	99 30 800 14	HOIST LIMIT SWITCH INSTAL.
SPRING PLUG DIN 11024 2.5	433206014	21	1	574	10 55 753 7	HOIST LIMITSWITCH LEFT IN
SPRING PLUG DIN 11024 2.5	433206014	21	1	575	10 55 757 6	HOIST LIMITSWITCH RIGHT I
SPRING PLUG DIN 11024 2.5	433206014	48	1	577	99 48 521 14	TIP BOOM CPL
SPRING PLUG DIN 11024 2.5	433206014	51	8	621	10 55 372 1	ROOF RAILING RFK
SPRING PLUG DIN 11024 2.5	433206014	26	1	633	10 51 176 9	NEEDLE BOOM CPL
SPRING PLUG DIN 11024 4	433206214	33	2	450	11 23 820 3	PIVOT PIECE CPL
SPRING PLUG DIN 11024 4	433206214	52	10	621	10 55 372 1	ROOF RAILING RFK
SPRING PLUG DIN 11024 4	433206214	27	2	633	10 51 176 9	NEEDLE BOOM CPL
SPRING PLUG DIN 11024 5	433206314	21	6	309	99 29 803 14	LASHING BALLAST
SPRING PLUG DIN 11024 5	433206314	31	2	637	99 10 116 14	ROPE GUIDE
SPRING SUPPORT	11267441	4	2	89	11 06 730 4	SHUTDOWN VALVE
SPRING SUPPORT	9076178	12	2	133	10 12 226 2	REGULATION REPAIR KIT

Description	Item	Pos.	Quantity	Sheet	Assembly	Description
SPROCKET	10521183	12	1	408	10 55 876 0	CRAWLER CARRIER RIGHT CP
SPROCKET	10521183	12	1	417	10 55 876 1	CRAWLER CARRIER LEFT CP
SPUR WHEEL	11294362	100	1	78	11 24 682 0	DISTRIBUTOR GEARBOX
SPUR WHEEL	11294363	110	4	78	11 24 682 0	DISTRIBUTOR GEARBOX
SQUARE TUBE	10557117	5	1	650	11 23 619 7	SELF-LOADING SYSTEM RFK
SQUARE TUBE	11278507	1	1	516	11 28 357 6	MOUNTING PARTS
STAR GRIP	11242422	23	2	680	11 22 344 2	CAMERA INSTALLATION
STARTER	10410932	1	1	240	10 12 037 2	STARTER INSTALLATION
STARTER INSTALLATION	10120372	450	1	172	10 14 032 7	DIESEL ENGINE
STEEL BALL	11226127	140	1	346	51 14 347 14	SG SAFETY BLOCK
STEEL WIRE ROPE	773400308	73	0.25	29	11 24 519 0	SUPERSTRUCTURE EL
STEEL WIRE ROPE	773400308	25	0.9	515	10 59 863 3	PENDULUM CPL
STEEL WIRE ROPE	773400308	12	0.62	579	11 25 204 2	SUPPORT CPL
STEEL WIRE ROPE	773400314	22	2	637	99 10 116 14	ROPE GUIDE
STEERING CONSOLE LEFT CP	10223224	16	1	350	11 29 327 3	CABIN CPL
STEERING CONSOLE RIGHT	11260956	17	1	350	11 29 327 3	CABIN CPL
STEP	10501783	1	1	414	10 50 179 5	ACCESS CPL
STICKER	10541838	32	1	598	10 51 118 5	MODEM RFK
STICKER	11295194	100	2	604	11 29 444 5	HEATING RFK
STICKER SOUND VOLUME LE	9874345	12	1	6	11 24 047 9	SUPERSTRUCTURE CPL
STOP BOLT M10X1	540272414	60	1	615	54 02 703 14	FLANGE CPL
STOP PLUG	10123528	3	1	129	10 14 131 6	TERMINAL BOARD PRE-ASS.
STOPPER PLUG	602458214	15	8	359	10 53 171 8	KEYBOARD
STOPPER PLUG	606907114	37	1	714	10 52 155 9	MODULE REFUELLING SYSTE
STOPPER PLUG	693061214	26	4	566	10 57 624 5	CABLE LOOM
STOPPER PLUG	693061314	29	1	34	10 56 645 8	TERMINAL BOX
STOPPER PLUG	693061314	25	4	566	10 57 624 5	CABLE LOOM
STOPPER PLUG	693061414	24	1	566	10 57 624 5	CABLE LOOM
STOPPER PLUG	693061414	52	1	566	10 57 624 5	CABLE LOOM
STOPPER PLUG	693061514	52	2	578	97 14 959 03	HOIST LIMIT SWITCH EL
STOPPER PLUG	693061514	52	2	583	91 95 871 14	HOIST LIMIT SWITCH EL
STOPPER PLUG	693061514	52	2	634	10 51 167 1	LIMIT SWITCH EL
STRIP	10349434	21	4	302	11 24 483 7	MOUNTING PARTS SUPERST
STRIP	10546407	9	2	298	10 54 591 0	MOTOR COWLING
STRIP	10590801	10	1	536	11 29 488 4	ROPE GUARD CPL
STRIP	289003214	10	1	572	11 29 457 3	ROPE GUARD CPL
STRIP	289008514	21	1	541	11 29 938 4	MOUNTING PARTS
STRIP	289012914	10	1	530	11 29 451 7	ROPE GUARD CPL
STRIP	289016714	10	1	573	11 29 462 6	ROPE GUARD CPL
STRIP	592287014	26	1	366	10 35 250 8	CABIN
STRIP	948282314	6	1	60	10 56 067 3	BATTERY INSTALLATION CPL
STRIP	967559503	11	2	570	11 28 774 6	MOUNTING PARTS
STRIP	971303203	34	1	450	11 23 820 3	PIVOT PIECE CPL
STRIP	971303203	10	1	484	11 28 725 5	ROPE GUARD CPL
SUBPLATE	10526962	21	1	354	10 55 963 5	SWITCH CABINET X1
SUCTION MODUL	10146538	5	1	277	11 24 240 8	UREA CONTAINER
SUCTION PIPE AIR	11247162	11	1	264	11 24 114 2	SUCTION UNIT AIR
SUCTION PIPE AIR	11252578	15	1	280	11 24 114 6	COVER
SUCTION PIPE OIL	10519481	15	1	73	11 24 048 0	CENTRAL POWER UNIT
SUCTION PIPE OIL ST.CONST.	10575323	3	1	167	10 57 532 2	INTAKE PIPE OIL CPL
SUCTION PUMP PRE-ASS.	10133823	1	1	203	10 13 394 7	SUCTION PUMP WITH FASTEN
SUCTION PUMP WITH FASTEN	10133947	141	1	171	10 14 032 7	DIESEL ENGINE
SUCTION UNIT AIR	11241142	30	1	73	11 24 048 0	CENTRAL POWER UNIT
SUMP PAN CPL	11283977	15	1	482	11 24 570 3	BOOM INTERMEDIATE SECTIO
SUMP PAN CPL	11283977	15	1	498	11 24 570 9	BOOM INTERMEDIATE SECTIO
SUMP PAN CPL	11283977	15	1	504	11 24 571 5	BOOM INTERMEDIATE SECTIO
SUMP PAN CPL	11283978	16	1	482	11 24 570 3	BOOM INTERMEDIATE SECTIO
SUMP PAN CPL	11283978	16	1	498	11 24 570 9	BOOM INTERMEDIATE SECTIO
SUMP PAN CPL	11283978	16	1	504	11 24 571 5	BOOM INTERMEDIATE SECTIO
SUMP PAN CPL	11283995	17	1	482	11 24 570 3	BOOM INTERMEDIATE SECTIO

Description	Item	Pos.	Quantity	Sheet	Assembly	Description
SUMP PAN CPL	11283995	17	1	498	11 24 570 9	BOOM INTERMEDIATE SECTIO
SUMP PAN CPL	11283995	17	1	504	11 24 571 5	BOOM INTERMEDIATE SECTIO
SUMP PAN CPL	11283997	18	1	482	11 24 570 3	BOOM INTERMEDIATE SECTIO
SUMP PAN CPL	11283997	18	1	498	11 24 570 9	BOOM INTERMEDIATE SECTIO
SUMP PAN CPL	11283997	18	1	504	11 24 571 5	BOOM INTERMEDIATE SECTIO
SUN VISOR	592290714	6	1	375	59 22 905 14	MIRROR + SUNN VISOR
SUN WHEEL	540270714	13	1	613	54 02 701 14	PLANETARY STAGE
SUN WHEEL	540270914	23	1	613	54 02 701 14	PLANETARY STAGE
SUN WHEEL	9443784	40	1	412	96 93 178 01	TRACTION DRIVE
SUN WHEEL	944404503	20	1	412	96 93 178 01	TRACTION DRIVE
SUN WHEEL	944405203	30	1	412	96 93 178 01	TRACTION DRIVE
SUNSHADE	592291214	102	1	367	10 35 250 8	CABIN
SUPERSTR. SLEWING RING IN	10519631	21	1	6	11 24 047 9	SUPERSTRUCTURE CPL
SUPERSTRUCTURE CPL	11240479	5	1	2	01 38 281 14	LR 1300 SX
SUPERSTRUCTURE EL	11245190	3	1	6	11 24 047 9	SUPERSTRUCTURE CPL
SUPERSTRUCTURE HYDR	11296186	2	1	6	11 24 047 9	SUPERSTRUCTURE CPL
SUPPORT	11219265	10	2	477	11 23 749 8	SUPPORT CPL
SUPPORT	11219265	10	2	494	11 23 290 7	SUPPORT CPL
SUPPORT	11219265	11	2	495	11 23 292 2	SUPPORT CPL
SUPPORT	11219265	10	2	579	11 25 204 2	SUPPORT CPL
SUPPORT	11260806	44	2	577	99 48 521 14	TIP BOOM CPL
SUPPORT	289035314	10	1	479	99 29 588 14	SUPPORT
SUPPORT	992958814	10	4	478	11 28 594 7	SUPPORT CPL
SUPPORT	992958814	10	6	496	11 28 619 1	SUPPORT CPL
SUPPORT	992958814	10	6	502	11 28 653 4	SUPPORT CPL
SUPPORT CPL	11232907	14	8	481	11 24 570 5	INTERMEDIATE PIECE ASSE
SUPPORT CPL	11232907	14	8	497	11 24 571 1	INTERMEDIATE PIECE ASSE
SUPPORT CPL	11232907	14	16	503	11 24 571 7	INTERMEDIATE PIECE ASSE
SUPPORT CPL	11232907	15	2	509	11 24 132 4	BOOM HEAD CPL
SUPPORT CPL	11232907	59	2	525	11 24 336 5	PIVOT PIECE NEEDLE CPL
SUPPORT CPL	11232907	13	4	551	11 24 084 9	INTERMEDIATE PIECE ASSE
SUPPORT CPL	11232907	13	4	558	11 24 162 7	INTERMEDIATE PIECE ASSE
SUPPORT CPL	11232907	13	8	561	11 24 163 1	INTERMEDIATE PIECE ASSE
SUPPORT CPL	11232907	14	6	564	11 24 263 6	NEEDLE HEAD CPL
SUPPORT CPL	11232922	15	4	481	11 24 570 5	INTERMEDIATE PIECE ASSE
SUPPORT CPL	11232922	15	4	497	11 24 571 1	INTERMEDIATE PIECE ASSE
SUPPORT CPL	11232922	15	4	503	11 24 571 7	INTERMEDIATE PIECE ASSE
SUPPORT CPL	11232922	16	4	509	11 24 132 4	BOOM HEAD CPL
SUPPORT CPL	11232922	14	2	551	11 24 084 9	INTERMEDIATE PIECE ASSE
SUPPORT CPL	11232922	14	2	558	11 24 162 7	INTERMEDIATE PIECE ASSE
SUPPORT CPL	11232922	14	2	561	11 24 163 1	INTERMEDIATE PIECE ASSE
SUPPORT CPL	11232922	15	2	564	11 24 263 6	NEEDLE HEAD CPL
SUPPORT CPL	11237498	13	4	471	11 23 937 8	A-FRAME 1 ASSEMBLY UNIT
SUPPORT CPL	11237498	13	6	531	11 24 475 9	A-FRAME 2 CPL
SUPPORT CPL	11252042	51	2	577	99 48 521 14	TIP BOOM CPL
SUPPORT CPL	11285947	65	1	2	01 38 281 14	LR 1300 SX
SUPPORT CPL	11286191	69	1	2	01 38 281 14	LR 1300 SX
SUPPORT CPL	11286534	77	4	2	01 38 281 14	LR 1300 SX
SUPPORT CPL	991606114	63	1	6	11 24 047 9	SUPERSTRUCTURE CPL
SUPPORT CPL	991873614	43	4	473	11 24 444 4	A-FRAME 1 CPL
SUPPORT CYL	592182614	1	4	668	11 23 524 8	TUBING HYDR
SUPPORT PLATE CPL	990759714	12	4	671	11 89 568 8	SELF-LOADING SYSTEM RFK
SUPPORT SHEET	10349598	81	2	451	11 23 820 3	PIVOT PIECE CPL
SUPPORT SHEET	10349598	10	1	488	11 28 397 8	SUMP PAN CPL
SUPPORT SHEET	10349598	10	1	490	11 28 399 7	SUMP PAN CPL
SUPPORT SHEET	10349599	82	2	451	11 23 820 3	PIVOT PIECE CPL
SUPPORT SHEET	10349599	10	1	487	11 28 397 7	SUMP PAN CPL
SUPPORT SHEET	10349599	10	1	489	11 28 399 5	SUMP PAN CPL
SUPPORT SYSTEM CPL	11285443	14	5	553	11 28 978 7	BOOM ACCESS
SUPPORT SYSTEM CPL	11285443	14	6	560	11 28 979 2	BOOM ACCESS

Description	Item	Pos.	Quantity	Sheet	Assembly	Description
SUPPORT SYSTEM CPL	993167914	12	1	544	10 53 145 5	TILTING-BACK SUPPORT NEE
SUPPORT SYSTEM ST.CONST	992403814	3	1	550	99 31 679 14	SUPPORT SYSTEM CPL
SUPPORT SYSTEM ST.CONST	993317814	4	1	550	99 31 679 14	SUPPORT SYSTEM CPL
SUPPORTING RING	10352368	140	1	669	59 21 826 14	SUPPORT CYL
SUPPORTING RING	511710214	1	1	22	51 17 042 14	QUICK-FITTING THREAD COU
SUPPORTING RING	511710214	1	1	446	51 17 043 14	QUICK-FITTING THREAD COU
SUPPORTING RING	511710314	13	1	24	51 05 719 14	QUICK-FITTING THREAD COU
SUPPORTING WASHER 45X5	10123256	10	2	125	98 85 937	WASHER SET
SUPPORTING WASHER 45X5	10123257	11	2	125	98 85 937	WASHER SET
SUPPORTING WASHER 45X5	10123258	12	2	125	98 85 937	WASHER SET
SUPPORTING WASHER S32X4	7380815	21	4	99	10 11 835 7	REPAIR KIT CONNECTION HO
SUPPORTING WASHER S32X4	7380815	21	4	100	92 74 731	SEAL KIT CONNECTING HOUS
SUPPORTING WASHER S32X4	7380586	22	2	99	10 11 835 7	REPAIR KIT CONNECTION HO
SUPPORTING WASHER S32X4	7380586	20	2	100	92 74 731	SEAL KIT CONNECTING HOUS
SUPPORTING WASHER S32X4	7380291	19	2	99	10 11 835 7	REPAIR KIT CONNECTION HO
SUPPORTING WASHER S32X4	7380291	19	2	100	92 74 731	SEAL KIT CONNECTING HOUS
SUPPORTING WASHER S52X7	7380698	10	1	108	98 85 924	WASHER SET
SUPPORTING WASHER S52X7	7380697	11	1	108	98 85 924	WASHER SET
SUPPORTING WASHER S52X7	7380696	12	1	108	98 85 924	WASHER SET
SUPPORTING WASHER S52X7	7380695	13	1	108	98 85 924	WASHER SET
SWITCH	10013575	35	1	693	70 28 516	SEAT FRAME
SWITCH	10445976	1	1	361	69 31 685 14	SAFETY LEVER CPL
SWITCH	592291814	121	1	367	10 35 250 8	CABIN
SWITCH CABINET X1	10559635	8	1	351	11 27 973 6	CABIN EL
SWITCHING HOUSING	385094414	5	1	359	10 53 171 8	KEYBOARD
SWITCHING JACKET	540272214	32	1	615	54 02 703 14	FLANGE CPL
SWIVEL BOLT BRACKET CLAM	10355006	23	2	268	11 24 114 3	EXHAUST GAS SYSTEM
SYNCHRONIZING HYDR RFK	10536350	650	1	4	01 38 281 14	LR 1300 SX
SYNCHRONIZING HYDR RFK	10536351	2	1	672	10 53 635 0	SYNCHRONIZING HYDR RFK
T-NUT M10X12	890035314	59	21	284	11 24 409 0	PANELLING SUPERSTR. INSTA
TALLOW-DROP SCREW 10.9	10137839	43	4	123	10 13 802 6	RK CYL.+CONTROL PLATE+SH
TALLOW-DROP SCREW 10.9	10137839	43	4	129	10 14 131 6	TERMINAL BOARD PRE-ASS.
TANK HYDR CPL	10560701	3	1	42	10 56 070 0	TANK INSTALLATION HYDR
TANK HYDR ST.CONST.	10560703	3	1	44	10 56 070 1	TANK HYDR CPL
TANK INSTALLATION HYDR	10560700	15	1	6	11 24 047 9	SUPERSTRUCTURE CPL
TAPERED ROLLER BEARING	10355730	15	1	154	11 21 593 6	PUMP ELEMENT
TAPERED ROLLER BEARING	10355731	16	1	154	11 21 593 6	PUMP ELEMENT
TAPERED ROLLER BEARING	746225801	4	1	412	96 93 178 01	TRACTION DRIVE
TAPERED ROLLER BEARING	761008703	3	1	412	96 93 178 01	TRACTION DRIVE
TEE	553087814	37	1	275	11 24 114 5	ASSEMBLY INSTAL.
TEMP SENSOR	10493626	50	1	28	11 24 519 0	SUPERSTRUCTURE EL
TEMP SENSOR	10493626	1	2	250	10 14 297 7	ENGINE CONTROL SENSORS
TEMPERATURE PROBE CPL.	10152036	2	1	250	10 14 297 7	ENGINE CONTROL SENSORS
TEMPERATURE SENSOR	10424276	85	1	352	11 27 973 6	CABIN EL
TEMPERATURE SENSOR	11241756	40	1	28	11 24 519 0	SUPERSTRUCTURE EL
TEMPERATURE SENSOR	11349182	8	2	275	11 24 114 5	ASSEMBLY INSTAL.
TEMPERATURE SWITCH	10513459	17	1	75	11 24 773 5	HYDR POWER UNIT
TENSION JACK HYDR CPL	10557163	2	1	409	10 55 716 1	GUIDE WHEEL UNIT CPL
TENSION PIN	616155514	11	1	457	61 61 541 14	CABLE DRUM
TENSION PLATE	950735414	13	2	582	99 38 329 14	TIP BOOM CPL
TENSION PLATE	950735714	40	2	582	99 38 329 14	TIP BOOM CPL
TENSION SPRING	7617520	51	2	382	10 28 999 3	VIBRATING SYSTEM
TERMINAL BOARD PRE-ASS.	10141316	1	1	128	10 14 131 7	REPAIR KIT CONNECTING PL
TERMINAL BOX	10566458	103	1	29	11 24 519 0	SUPERSTRUCTURE EL
TERMINAL CAP	11229635	30	3	28	11 24 519 0	SUPERSTRUCTURE EL
TERMINAL HOLDER B30	10537558	1	1	385	10 53 756 0	LAMP HOLDER CPL
TERMINAL HOUSING	540271614	2	1	614	54 02 702 14	ROPE DRUM CPL
THERMOREGULATOR	511657614	13	1	8	11 29 618 6	SUPERSTRUCTURE HYDR
THERMOSTAT	10146029	2	1	230	10 14 821 5	THERMOSTAT HOUSING ASS
THERMOSTAT	592293814	260	1	378	59 22 930 14	AIR CONDITIONER

Description	Item	Pos.	Quantity	Sheet	Assembly	Description
THERMOSTAT HOUSING	10148200	1	1	230	10 14 821 5	THERMOSTAT HOUSING ASS
THERMOSTAT HOUSING ASS	10148215	380	1	172	10 14 032 7	DIESEL ENGINE
THREADED BUSHING	9079078	9	1	193	10 13 728 5	CYLINDER HEAD
THREADED ELBOW JOINT	11268711	610	1	78	11 24 682 0	DISTRIBUTOR GEARBOX
THREADED ELBOW JOINT	592317014	600	1	78	11 24 682 0	DISTRIBUTOR GEARBOX
THREADED PIPE	592316114	150	1	78	11 24 682 0	DISTRIBUTOR GEARBOX
THREADED ROD	11240099	16	2	680	11 22 344 2	CAMERA INSTALLATION
THREADED ROD	11285441	10	1	556	11 28 544 3	SUPPORT SYSTEM CPL
THREE PHASE CURRENT GE	10148088	1	1	239	10 14 584 5	GENERATOR, PRE-ASSEMBLE
THROTTLE SCREW	7615603	8	1	399	11 22 473 8	ADJUSTMENT
THROTTLE SCREW	7615604	9	1	399	11 22 473 8	ADJUSTMENT
THROUGH DRIVE	10129874	12	1	75	11 24 773 5	HYDR POWER UNIT
THROUGH DRIVE	10129874	300	1	116	10 12 878 7	V PUMP
THROUGH DRIVE	10130005	301	1	116	10 12 878 7	V PUMP
THROUGH DRIVE	10134521	304	1	116	10 12 878 7	V PUMP
THROUGH DRIVE	10553922	11	1	75	11 24 773 5	HYDR POWER UNIT
THROUGH-VALVE	7402781	12	1	270	11 24 114 4	FUEL SYSTEM
THRUST PIECE M12X26 X8C	790550914	15	1	290	10 57 883 5	DOOR
THRUST PIECE M12X26 X8C	790550914	13	1	292	10 57 897 6	DOOR
THRUST PIECE M12X26 X8C	790550914	4	1	294	10 57 940 0	DOOR
THRUST PIECE M12X26 X8C	790550914	4	1	295	10 56 623 7	DOOR
THRUST PIECE M12X26 X8C	790550914	13	1	296	10 56 580 8	DOOR
TIGHT FIT SLEEVE 16.5X20X2	9074798	9	12	174	10 15 438 6	CRANKCASE CPL.
TIGHT FIT SLEEVE 16.5X20X2	9074798	3	2	242	10 11 557 7	FLYWHEEL HOUSING MOUNT
TIGHT FIT SLEEVE 16X20X20	10134348	3	2	175	10 14 768 6	POWER UNIT SUPPORT ATT
TIGHTENING STRAP HINGE PI	10530689	23	2	450	11 23 820 3	PIVOT PIECE CPL
TIGHTENING STRAP HINGE PI	10530689	12	4	461	99 34 198 14	LIEBHERR SIGN
TIGHTENING STRAP HINGE PI	10530689	10	1	486	11 28 391 3	FIXING CLAMP
TIGHTENING STRAP HINGE PI	10531873	15	2	450	11 23 820 3	PIVOT PIECE CPL
TIGHTENING STRAP HINGE PI	10531873	16	1	485	11 28 390 8	BOOM ACCESS
TIGHTENING STRAP HINGE PI	10531873	16	1	499	11 28 583 8	BOOM ACCESS
TIGHTENING STRAP HINGE PI	10531873	16	1	505	11 28 626 1	BOOM ACCESS
TIGHTENING STRAP HINGE PI	10531889	10	1	555	11 28 667 9	FIXING CLAMP
TIGHTENING STRAP HINGE PI	11271451	10	2	554	11 28 979 0	GRATING CARRIER
TIGTENING STRAP	10581173	20	2	275	11 24 114 5	ASSEMBLY INSTAL.
TILT-BACK SUPPORT	11292598	60	1	2	01 38 281 14	LR 1300 SX
TILT-BACK SUPPORT	919590114	10	1	544	10 53 145 5	TILTING-BACK SUPPORT NEE
TILT-BACK SUPPORT	919590214	11	1	544	10 53 145 5	TILTING-BACK SUPPORT NEE
TILT-BACK SUPPORTS INSTAL	11275365	10	1	462	11 29 259 8	TILT-BACK SUPPORT
TILTING-BACK SUPPORT NEE	10531455	13	1	523	11 24 618 2	NEEDLE ADD-ON PARTS
TILTING-BACK SUPPORTS H	10531456	2	1	544	10 53 145 5	TILTING-BACK SUPPORT NEE
TILTING-BACK SUPPORTS H	10585108	2	1	462	11 29 259 8	TILT-BACK SUPPORT
TIME RELAY	630170014	85	1	354	10 55 963 5	SWITCH CABINET X1
TIME RELAY	630170014	32	1	708	10 56 013 7	MAINS SUPPLY BATTERY
TIP BOOM CPL	993832914	119	1	3	01 38 281 14	LR 1300 SX
TIP BOOM CPL	994852114	115	1	3	01 38 281 14	LR 1300 SX
TIP BOOM MODIFICATION	918907114	116	1	3	01 38 281 14	LR 1300 SX
TIP BOOM ST.CONST.	993877114	10	1	582	99 38 329 14	TIP BOOM CPL
TIP BOOM ST.CONST.	994852014	1	1	577	99 48 521 14	TIP BOOM CPL
TOGGLE	956049414	21	4	637	99 10 116 14	ROPE GUIDE
TOOL	10560228	1	1	444	10 56 183 8	TOOL
TOOL	10561838	1	1	443	10 56 187 5	TOOL EQUIPMENT
TOOL BOX	790042514	2	1	444	10 56 183 8	TOOL
TOOL EQUIPMENT	10561875	50	1	2	01 38 281 14	LR 1300 SX
TRACTION DRIVE	969317801	6	1	408	10 55 876 0	CRAWLER CARRIER RIGHT CP
TRACTION DRIVE	969317801	6	1	417	10 55 876 1	CRAWLER CARRIER LEFT CP
TRANSPORT BRACKET CPL	971333503	20	3	408	10 55 876 0	CRAWLER CARRIER RIGHT CP
TRANSPORT BRACKET CPL	971333503	20	3	417	10 55 876 1	CRAWLER CARRIER LEFT CP
TRANSPORT DEVICE ATTACH	10142864	481	1	172	10 14 032 7	DIESEL ENGINE
TRANSPORT DEVICE ATTACH	9079823	480	1	172	10 14 032 7	DIESEL ENGINE

Description	Item	Pos.	Quantity	Sheet	Assembly	Description
TRANSPORT LASHING	11287946	11	1	481	11 24 570 5	INTERMEDIATE PIECE ASSE
TRANSPORT LASHING	11287946	11	1	497	11 24 571 1	INTERMEDIATE PIECE ASSE
TRANSPORT LASHING	11287946	11	1	503	11 24 571 7	INTERMEDIATE PIECE ASSE
TRANSPORT LASHING	11289827	11	1	551	11 24 084 9	INTERMEDIATE PIECE ASSE
TRANSPORT LASHING	11289827	11	1	558	11 24 162 7	INTERMEDIATE PIECE ASSE
TRANSPORT LASHING	11289827	11	1	561	11 24 163 1	INTERMEDIATE PIECE ASSE
TRANSPORTER CONSOLE	10145229	1	1	241	10 14 286 4	TRANSPORT DEVICE ATTACH
TRAVERSE	10589483	14	1	410	10 55 716 2	GUIDE WHEEL CPL
TRAVERSE	919075014	2	1	577	99 48 521 14	TIP BOOM CPL
TRAVERSE	993081414	10	2	535	99 26 359 14	ANCHORING ROD CPL
TUBE	10098601	15	4	570	11 28 774 6	MOUNTING PARTS
TUBE	11250564	23	1	254	11 24 114 0	COOLER INSTALLATION WATE
TUBE	11287715	24	1	254	11 24 114 0	COOLER INSTALLATION WATE
TUBE	11290847	170	1	78	11 24 682 0	DISTRIBUTOR GEARBOX
TUBE	289052014	12	1	557	11 28 982 7	TRANSPORT LASHING
TUBE	289057714	55	1	450	11 23 820 3	PIVOT PIECE CPL
TUBE	289057714	12	1	491	11 28 794 6	TRANSPORT LASHING
TUBE	592316414	220	1	78	11 24 682 0	DISTRIBUTOR GEARBOX
TUBE	9080660	6	1	182	10 14 861 5	OIL SUMP PRE-ASS.
TUBE	950343514	5	1	550	99 31 679 14	SUPPORT SYSTEM CPL
TUBE	956064714	7	2	577	99 48 521 14	TIP BOOM CPL
TUBE	956213814	22	1	521	99 23 398 14	ROLLER SET
TUBE	956374914	26	1	582	99 38 329 14	TIP BOOM CPL
TUBE	957104414	11	2	633	10 51 176 9	NEEDLE BOOM CPL
TUBE	957336914	17	1	512	11 28 629 9	MOUNTING PARTS
TUBING HYDR	10517262	2	1	607	10 54 251 6	ROPE REEVING WINCH HYDR
TUBING HYDR	10517281	2	1	688	10 51 728 0	CABIN INCLINATION RFK
TUBING HYDR	10519591	2	1	463	10 58 510 8	TILTING-BACK SUPPORTS H
TUBING HYDR	10531461	2	1	545	10 53 145 6	TILTING-BACK SUPPORTS H
TUBING HYDR	10552161	2	1	342	10 51 968 3	SG HYDR
TUBING HYDR	10554594	2	1	673	10 53 635 1	SYNCHRONIZING HYDR RFK
TUBING HYDR	11235248	2	1	667	11 23 524 6	JACK-UP SYSTEM HYDR RFK
TUBING HYDR	11259031	2	1	390	11 25 981 5	UC HYDR
TUBING HYDR	11894083	2	1	661	11 89 408 0	JACK-UP SYSTEM HYDR RFK
TURBOCHARGER	10139624	1	1	236	10 14 013 6	EXHAUST TC MOUNTING
TURNBUCKLE		10	-1	688	10 51 728 0	CABIN INCLINATION RFK
TURNBUCKLE	790306414	64	1	58	10 58 163 4	CABIN SUSPENSION CPL
TURNING KNOB	10687925	80	1	358	10 03 610 7	KEYBOARD OPERATING PANE
TWIN HOOK	11271489	1	1	595	11 27 148 8	HANGER
TWIST PIVOT	10529080	14	1	686	10 58 064 7	VIDEO MONITORING SYSTEM
TWO-HOLE NUT AL	11005554	17	1	273	10 30 300 7	FUEL PREFILTER
TYPE PLATE	11226148	220	1	346	51 14 347 14	SG SAFETY BLOCK
TYPE PLATE	11276851	53	1	2	01 38 281 14	LR 1300 SX
U-PROFILE	11225259	23	3	300	11 24 922 2	COVER UNDERSIDE
U-STEEL	10222995	59	2	450	11 23 820 3	PIVOT PIECE CPL
U-STEEL	10565639	11	2	459	10 58 193 7	GRATING CPL
U-STEEL	10581999	21	2	459	10 58 193 7	GRATING CPL
U-STEEL	10582001	77	1	451	11 23 820 3	PIVOT PIECE CPL
U-STEEL	10582001	22	1	459	10 58 193 7	GRATING CPL
U-STEEL	10582020	50	2	450	11 23 820 3	PIVOT PIECE CPL
UC CPL	11235478	33	1	2	01 38 281 14	LR 1300 SX
UC HYDR	11259815	2	1	389	11 23 547 8	UC CPL
UC PLATFORM	11241478	554	1	3	01 38 281 14	LR 1300 SX
UC PLATFORM	992338914	38	1	2	01 38 281 14	LR 1300 SX
UNIVERSAL LABEL	605756914	2	1	30	10 35 167 4	CAN MODULE
UNLOCKING TOOL	11621284	120	1	276	11 24 114 5	ASSEMBLY INSTAL.
UREA CONTAINER	11242408	6	1	275	11 24 114 5	ASSEMBLY INSTAL.
V PUMP	10128787	6	1	75	11 24 773 5	HYDR POWER UNIT
V PUMP	10226013	9	1	75	11 24 773 5	HYDR POWER UNIT
V PUMP	10226505	8	1	75	11 24 773 5	HYDR POWER UNIT

Description	Item	Pos.	Quantity	Sheet	Assembly	Description
V PUMP	10530653	5	2	75	11 24 773 5	HYDR POWER UNIT
V PUMP	10534307	3	2	75	11 24 773 5	HYDR POWER UNIT
V-RING	10324881	4	1	147	11 49 032 3	CYLINDER
V-RING	11251437	5	1	396	11 89 617 8	SEALING SET
V-RIPPED BELT	11482412	7	1	226	10 14 286 0	AIR COND. COMPRESSOR A
VALVE	10011832	13	1	175	10 14 768 6	POWER UNIT SUPPORT ATT
VALVE	10011832	14	1	200	10 12 948 0	OIL COOLER, PRE-ASSEMBLE
VALVE	10445040	220	1	466	10 09 917 3	DOUBLE-ACTING CYL
VALVE	11224762	12	2	399	11 22 473 8	ADJUSTMENT
VALVE	592293314	70	1	378	59 22 930 14	AIR CONDITIONER
VALVE BLOCK	10225408	4	1	66	10 51 969 5	A-FRAME ERECTION HYDR
VALVE BLOCK	10351486	3	1	8	11 29 618 6	SUPERSTRUCTURE HYDR
VALVE BLOCK	11286476	1	1	8	11 29 618 6	SUPERSTRUCTURE HYDR
VALVE BLOCK	592145814	4	1	8	11 29 618 6	SUPERSTRUCTURE HYDR
VALVE BLOCK FEED PRESSUR	511637714	15	1	75	11 24 773 5	HYDR POWER UNIT
VALVE BLOCK SINGLE DISK	10541514	6	1	8	11 29 618 6	SUPERSTRUCTURE HYDR
VALVE BRIDGE	10119695	2	2	194	10 14 843 8	ROCKER ARM BRACKET CPL.
VALVE COLLET	10004331	8	8	192	10 13 728 6	CYLINDER HEAD PRE-ASS.
VALVE HOLDER	954598503	12	2	302	11 24 483 7	MOUNTING PARTS SUPERST
VALVE HOLDER	954598503	13	1	311	10 51 969 7	NEEDLE LUFFING WINCH
VALVE MOUNTING	994001014	28	1	606	10 51 743 9	ROPE LUG CPL RFK
VALVE PLATE	10575966	17	1	302	11 24 483 7	MOUNTING PARTS SUPERST
VALVE ROCKER PRINTED	7025990	32	1	693	70 28 516	SEAT FRAME
VALVE ROCKER PRINTED	7025991	33	1	693	70 28 516	SEAT FRAME
VALVE ROCKER PRINTED	7025992	34	1	693	70 28 516	SEAT FRAME
VALVE STEM GUIDE	10139064	4	4	193	10 13 728 5	CYLINDER HEAD
VALVE STEM SEAL RING	10120334	5	4	192	10 13 728 6	CYLINDER HEAD PRE-ASS.
VARIABLE DISPLACEMENT MO	11251232	2	1	435	11 26 260 6	WINCH 1 HYDR
VARIABLE DISPLACEMENT MO	11251232	2	1	441	11 26 261 1	WINCH 2 HYDR
VARIABLE DISPLACEMENT MO	512405914	3	2	392	11 25 903 1	TUBING HYDR
VARNISH SPRAY	890045314	16	1	444	10 56 183 8	TOOL
VARNISH SPRAY	890063714	17	1	444	10 56 183 8	TOOL
VENTILATION FILTER	505104914	260	1	78	11 24 682 0	DISTRIBUTOR GEARBOX
VENTILATION FILTER	693113814	485	1	78	11 24 682 0	DISTRIBUTOR GEARBOX
VENTILATION SCREW	485581914	54	1	34	10 56 645 8	TERMINAL BOX
VENTILATION SCREW	7412942	1	1	273	10 30 300 7	FUEL PREFILTER
VENTILATION VALVE	10351239	205	2	670	59 21 826 14	SUPPORT CYL
VENTILATION VALVE	540136314	3	4	66	10 51 969 5	A-FRAME ERECTION HYDR
VENTILATION VALVE	592089814	69	1	339	99 04 645 14	DRIVE
VENTILATION VALVE	9267343	6	2	97	10 11 835 0	CONNECTION HOUSING
VENTILATOR RING	10352187	3	1	26	10 22 592 5	COOLER MOTOR
VIBRATING SYSTEM	10289992	50	1	692	10 04 363 3	DRIVERS SEAT AIR-SUSPEN
VIBRATING SYSTEM	10289993	50	1	380	10 22 506 8	OPERATOR SEAT
VIDEO MONITORING SYSTEM	10580647	11	1	682	11 89 400 8	VIDEO MONITORING SYSTEM
VIDEO MONITORING SYSTEM	11219907	702	1	4	01 38 281 14	LR 1300 SX
VIDEO MONITORING SYSTEM	11894008	704	1	4	01 38 281 14	LR 1300 SX
VOLTAGE TRANSFORMER	693183914	91	1	354	10 55 963 5	SWITCH CABINET X1
VORTEX WHEEL	11238878	10	1	518	69 28 155 14	WIND TRANSMITTER
WAGON CHASSIS CPL	7023347	4	1	691	99 21 973 14	DRIVER'S SEAT RFK
WARNING LIGHT EL RFK	11215298	3	1	625	11 21 546 1	WARNING LIGHT RFK
WARNING LIGHT INSTALL RFK	11215462	1	1	625	11 21 546 1	WARNING LIGHT RFK
WARNING LIGHT RFK	11215461	566	1	3	01 38 281 14	LR 1300 SX
WASHER	10522188	4	1	373	59 22 871 14	FRONT WINDOW CPL
WASHER	10687926	81	1	358	10 03 610 7	KEYBOARD OPERATING PANE
WASHER	11293195	7	1	400	10 44 510 2	QUICK RELEASE FITTING
WASHER	540271214	25	6	613	54 02 701 14	PLANETARY STAGE
WASHER	540271514	29	1	613	54 02 701 14	PLANETARY STAGE
WASHER	540271914	3	1	615	54 02 703 14	FLANGE CPL
WASHER	540273114	11	1	617	54 02 705 14	DRIVE UNIT CPL
WASHER	592288214	32	1	373	59 22 871 14	FRONT WINDOW CPL

Description	Item	Pos.	Quantity	Sheet	Assembly	Description
WASHER 10/20X11 S355J2+AR	10562095	70	4	604	11 29 444 5	HEATING RFK
WASHER 10/30X50 S355J2;EN	11249738	11	2	270	11 24 114 4	FUEL SYSTEM
WASHER 12/30X30 S355J2;EN	10519789	74	4	264	11 24 114 2	SUCTION UNIT AIR
WASHER 129/102X2 ST 12.03	385151114	6	1	329	99 29 258 14	LUG SHEAVE SET
WASHER 142/180X2 PA 6 G	11282810	45	8	582	99 38 329 14	TIP BOOM CPL
WASHER 165/132X1 ST 12.03	385123814	13	2	329	99 29 258 14	LUG SHEAVE SET
WASHER 165/132X2 ST 12.03	949352914	12	4	329	99 29 258 14	LUG SHEAVE SET
WASHER 200/103X1 DC01;EN	385255414	22	4	665	11 89 568 6	SELF-LOADING SYSTEM RFK
WASHER 200/103X2 DC01;EN	385255314	21	4	665	11 89 568 6	SELF-LOADING SYSTEM RFK
WASHER 200/103X4 S235JR;E	385255514	23	4	665	11 89 568 6	SELF-LOADING SYSTEM RFK
WASHER 21/37X4 PA 6 G	948967314	3	4	516	11 28 357 6	MOUNTING PARTS
WASHER 225/81X26 PA 6 G	970855603	6	2	475	99 14 137 14	DEFLECTION PULLEY CPL
WASHER 25.2/32X3 POM	958471614	18	1	290	10 57 883 5	DOOR
WASHER 25.2/32X3 POM	958471614	18	1	292	10 57 897 6	DOOR
WASHER 25.2/32X3 POM	958471614	7	1	294	10 57 940 0	DOOR
WASHER 25.2/32X3 POM	958471614	7	1	295	10 56 623 7	DOOR
WASHER 25.2/32X3 POM	958471614	15	1	296	10 56 580 8	DOOR
WASHER 36/50X3 PA 6 G	11223999	20	2	544	10 53 145 5	TILTING-BACK SUPPORT NEE
WASHER 36X40X12 S355J2H;E	956858014	45	3	570	11 28 774 6	MOUNTING PARTS
WASHER 46/70X2 POLYAMID	10593096	23	8	64	10 51 969 4	A-FRAME ERECTION CYL INST
WASHER 52/92X1 PA 6 G	11241005	22	16	64	10 51 969 4	A-FRAME ERECTION CYL INST
WASHER 52/92X3 PA 6 G	949740514	15	20	64	10 51 969 4	A-FRAME ERECTION CYL INST
WASHER 53/10X5 AISI 316	10567619	13	2	254	11 24 114 0	COOLER INSTALLATION WATE
WASHER 58/90X2 GUMMI NBR	949942814	7	8	493	91 85 910 14	ANCHORING ROD CPL
WASHER 58/90X2 GUMMI NBR	949942814	7	8	501	91 85 911 14	ANCHORING ROD CPL
WASHER 58/90X2 GUMMI NBR	949942814	7	16	507	99 03 609 14	ANCHORING ROD CPL
WASHER 58/90X2 GUMMI NBR	949942814	39	4	512	11 28 629 9	MOUNTING PARTS
WASHER 58/90X2 GUMMI NBR	949942814	17	20	571	99 26 362 14	ANCHORING ROD CPL
WASHER 81/105X2 PA 6 G	957900214	35	16	582	99 38 329 14	TIP BOOM CPL
WASHER 81/120X15 PA 6 G	289022714	37	2	582	99 38 329 14	TIP BOOM CPL
WASHER 81/200X74 PA 6 G	948773814	5	16	475	99 14 137 14	DEFLECTION PULLEY CPL
WASHER 9/16X25 S355J2C;EN	10553403	46	6	275	11 24 114 5	ASSEMBLY INSTAL.
WASHER 96/120X2 PA 6 G	289073714	13	5	529	11 29 649 2	PIN CPL
WASHER 96/140X5 PA 6 G	289073814	14	3	529	11 29 649 2	PIN CPL
WASHER AEHNL.ISO 7089 16 P	420053101	50	20	621	10 55 372 1	ROOF RAILING RFK
WASHER DIN 34816 10.5 PA 6.	485568514	9	4	333	99 29 392 14	SIDE COMPONENT
WASHER DIN 34816 10.5 PA 6.	485568514	17	12	335	99 29 386 14	BRACKET CPL
WASHER DIN 34816 10.5 PA 6.	485568514	17	12	336	99 29 434 14	BRACKET CPL
WASHER DIN 34816 10.5 PA 6.	485568514	14	2	491	11 28 794 6	TRANSPORT LASHING
WASHER DIN 34816 10.5 PA 6.	485568514	14	2	557	11 28 982 7	TRANSPORT LASHING
WASHER DIN 440 R11 ST	420600408	13	6	60	10 56 067 3	BATTERY INSTALLATION CPL
WASHER DIN 6340 10.5 C35	421300214	72	4	44	10 56 070 1	TANK HYDR CPL
WASHER DIN 6340 10.5 C35	421300214	71	4	165	10 51 948 1	SUCTION PIPE OIL
WASHER DIN 6340 10.5 C35	421300214	74	24	255	11 24 114 0	COOLER INSTALLATION WATE
WASHER DIN 6340 10.5 C35	421300214	71	22	261	11 24 114 1	COOLER INSTALLATION CHA
WASHER DIN 6340 10.5 C35	421300214	72	6	264	11 24 114 2	SUCTION UNIT AIR
WASHER DIN 6340 10.5 C35	421300214	71	28	268	11 24 114 3	EXHAUST GAS SYSTEM
WASHER DIN 6340 10.5 C35	421300214	94	12	276	11 24 114 5	ASSEMBLY INSTAL.
WASHER DIN 6340 10.5 C35	421300214	72	2	280	11 24 114 6	COVER
WASHER DIN 6340 13 ST	4635283	73	12	165	10 51 948 1	SUCTION PIPE OIL
WASHER DIN 6340 13 ST	4635283	72	8	268	11 24 114 3	EXHAUST GAS SYSTEM
WASHER DIN 6340 13 ST	4635283	95	2	276	11 24 114 5	ASSEMBLY INSTAL.
WASHER DIN 6340 17 C35	421300414	70	3	42	10 56 070 0	TANK INSTALLATION HYDR
WASHER DIN 6340 17 C35	421300414	70	3	47	10 56 073 2	FUEL TANK ASSY.
WASHER DIN 6340 21 C35	10567956	5	8	408	10 55 876 0	CRAWLER CARRIER RIGHT CP
WASHER DIN 6340 21 C35	10567956	5	8	417	10 55 876 1	CRAWLER CARRIER LEFT CP
WASHER DIN 6340 25	883203014	73	2	164	11 24 113 8	MOTOR BEARING CPL
WASHER DIN 6340 8.4 C35	421300514	77	4	164	11 24 113 8	MOTOR BEARING CPL
WASHER DIN 6340 8.4 C35	421300514	72	20	255	11 24 114 0	COOLER INSTALLATION WATE
WASHER DIN 6340 8.4 C35	421300514	70	28	261	11 24 114 1	COOLER INSTALLATION CHA

Description	Item	Pos.	Quantity	Sheet	Assembly	Description
WASHER DIN 6340 8.4 C35	421300514	70	4	262	11 28 574 7	WP
WASHER DIN 6340 8.4 C35	421300514	71	4	264	11 24 114 2	SUCTION UNIT AIR
WASHER DIN 6340 8.4 C35	421300514	73	4	604	11 29 444 5	HEATING RFK
WASHER DIN 6916 17 C45	460024203	16	2	320	10 51 968 6	LUG SUPERSTRUCTURE CPL
WASHER DIN 6916 17 C45	460024203	8	8	333	99 29 392 14	SIDE COMPONENT
WASHER DIN 6916 17 C45	460024203	15	6	335	99 29 386 14	BRACKET CPL
WASHER DIN 6916 17 C45	460024203	15	6	336	99 29 434 14	BRACKET CPL
WASHER DIN 6916 21 C45	460022203	11	48	341	10 51 968 2	SG SUPERSTRUCTURE
WASHER DIN 6916 21 C45	460022203	42	2	582	99 38 329 14	TIP BOOM CPL
WASHER DIN 6916 25 C45	460014603	74	2	164	11 24 113 8	MOTOR BEARING CPL
WASHER DIN 6916 25 C45	460014603	9	45	408	10 55 876 0	CRAWLER CARRIER RIGHT CP
WASHER DIN 6916 25 C45	460014603	9	45	417	10 55 876 1	CRAWLER CARRIER LEFT CP
WASHER DIN 7349 17 ST	421600901	53	54	408	10 55 876 0	CRAWLER CARRIER RIGHT CP
WASHER DIN 7349 17 ST	421600901	53	54	417	10 55 876 1	CRAWLER CARRIER LEFT CP
WASHER DIN 7349 31	4600667	48	2	541	11 29 938 4	MOUNTING PARTS
WASHER DIN 7349 6.4	4000648	70	9	254	11 24 114 0	COOLER INSTALLATION WATE
WASHER DIN 7989 11 ST	421700508	88	48	304	11 24 483 7	MOUNTING PARTS SUPERST
WASHER DIN 7989-B 18 ST;	421700314	36	4	75	11 24 773 5	HYDR POWER UNIT
WASHER DIN EN 28738 20 ST;	421101714	5	2	516	11 28 357 6	MOUNTING PARTS
WASHER DIN EN 28738 20 ST;	421101714	36	2	637	99 10 116 14	ROPE GUIDE
WASHER DIN EN 28738 20 ST;	421101714	4	1	642	99 06 789 14	FORK
WASHER DIN EN 28738 22 ST;	421101814	3	2	414	10 50 179 5	ACCESS CPL
WASHER DIN EN 28738 26 ST;	421102214	24	8	58	10 58 163 4	CABIN SUSPENSION CPL
WASHER DIN EN 28738 26 ST;	421102214	3	4	63	99 23 451 14	PIVOT BOLT INSTALLATION
WASHER DIN EN 28738 26 ST;	421102214	36	2	512	11 28 629 9	MOUNTING PARTS
WASHER DIN EN 28738 30 ST;	421102414	20	10	473	11 24 444 4	A-FRAME 1 CPL
WASHER DIN EN 28738 30 ST;	421102414	33	2	582	99 38 329 14	TIP BOOM CPL
WASHER DIN EN 28738 32 ST;	421102614	16	2	544	10 53 145 5	TILTING-BACK SUPPORT NEE
WASHER DIN EN 28738 35 ST;	421102814	51	2	570	11 28 774 6	MOUNTING PARTS
WASHER DIN EN 28738 35 ST;	421102814	18	2	633	10 51 176 9	NEEDLE BOOM CPL
WASHER DIN EN 28738 36 ST;	421102914	46	2	637	99 10 116 14	ROPE GUIDE
WASHER DIN EN 28738 36 ST;	421102914	3	12	639	99 23 405 14	INTERMEDIATE TENSIONING
WASHER DIN EN 28738 36 ST;	421102914	3	12	641	99 23 420 14	INTERMEDIATE TENSIONING
WASHER DIN EN 28738 36 ST;	421102914	6	14	643	97 05 997 03	INTERMEDIATE TENSIONING
WASHER DIN EN 28738 40 ST	421103014	14	3	58	10 58 163 4	CABIN SUSPENSION CPL
WASHER DIN EN 28738 40 ST	421103014	78	4	164	11 24 113 8	MOTOR BEARING CPL
WASHER DIN EN 28738 40 ST	421103014	18	8	311	10 51 969 7	NEEDLE LUFFING WINCH
WASHER DIN EN 28738 40 ST	421103014	27	6	535	99 26 359 14	ANCHORING ROD CPL
WASHER DIN EN 28738 40 ST	421103014	17	8	544	10 53 145 5	TILTING-BACK SUPPORT NEE
WASHER DIN EN 28738 40 ST	421103014	12	2	577	99 48 521 14	TIP BOOM CPL
WASHER DIN EN 28738 45 ST;	421103214	19	2	64	10 51 969 4	A-FRAME ERECTION CYL INST
WASHER DIN EN 28738 45 ST;	421103214	37	4	512	11 28 629 9	MOUNTING PARTS
WASHER DIN EN 28738 45 ST;	421103214	53	1	533	11 29 426 7	MOUNTING PARTS
WASHER DIN EN 28738 45 ST;	421103214	37	2	541	11 29 938 4	MOUNTING PARTS
WASHER DIN EN 28738 45 ST;	421103214	52	8	570	11 28 774 6	MOUNTING PARTS
WASHER DIN EN 28738 45 ST;	421103214	13	4	577	99 48 521 14	TIP BOOM CPL
WASHER DIN EN 28738 50 ST;	421103314	28	12	577	99 48 521 14	TIP BOOM CPL
WASHER DIN EN 28738 50 ST;	421103314	20	1	650	11 23 619 7	SELF-LOADING SYSTEM RFK
WASHER DIN EN 28738 55 ST;	421103414	1	4	493	91 85 910 14	ANCHORING ROD CPL
WASHER DIN EN 28738 55 ST;	421103414	1	2	501	91 85 911 14	ANCHORING ROD CPL
WASHER DIN EN 28738 55 ST;	421103414	1	8	507	99 03 609 14	ANCHORING ROD CPL
WASHER DIN EN 28738 55 ST;	421103414	38	16	512	11 28 629 9	MOUNTING PARTS
WASHER DIN EN 28738 55 ST;	421103414	71	2	525	11 24 336 5	PIVOT PIECE NEEDLE CPL
WASHER DIN EN 28738 55 ST;	421103414	28	12	535	99 26 359 14	ANCHORING ROD CPL
WASHER DIN EN 28738 55 ST;	421103414	19	4	542	10 59 968 1	ANCHORING ROD CPL
WASHER DIN EN 28738 55 ST;	421103414	14	12	571	99 26 362 14	ANCHORING ROD CPL
WASHER DIN EN 28738 55 ST;	421103414	14	1	577	99 48 521 14	TIP BOOM CPL
WASHER DIN EN 28738 60 ST;	421103514	29	4	535	99 26 359 14	ANCHORING ROD CPL
WASHER DIN EN 28738 60 ST;	421103514	21	12	542	10 59 968 1	ANCHORING ROD CPL
WASHER DIN EN 28738 60 ST;	421103514	22	4	571	99 26 362 14	ANCHORING ROD CPL

Description	Item	Pos.	Quantity	Sheet	Assembly	Description
WASHER DIN EN 28738 60 ST;	421103514	42	2	637	99 10 116 14	ROPE GUIDE
WASHER DIN EN 28738 60 ST;	421103514	24	12	644	10 51 971 3	SELF-LOADING SYSTEM RFK
WASHER DIN EN 28738 65 ST;	421103614	18	6	309	99 29 803 14	LASHING BALLAST
WASHER DIN EN 28738 65 ST;	421103614	13	4	460	99 30 060 14	ANCHORING ROD CPL
WASHER DIN EN 28738 65 ST;	421103614	13	4	492	99 24 404 14	ANCHORING ROD CPL
WASHER DIN EN 28738 65 ST;	421103614	13	4	500	99 24 405 14	ANCHORING ROD CPL
WASHER DIN EN 28738 65 ST;	421103614	13	8	506	99 24 406 14	ANCHORING ROD CPL
WASHER DIN EN 28738 65 ST;	421103614	13	4	519	99 24 594 14	ANCHORING ROD CPL
WASHER DIN EN 28738 65 ST;	421103614	11	2	528	11 28 852 3	PIN CPL
WASHER DIN EN 28738 65 ST;	421103614	19	8	633	10 51 176 9	NEEDLE BOOM CPL
WASHER DIN EN 28738 75 ST;	421103714	14	8	476	99 26 417 14	ANCHORING ROD CPL
WASHER DIN EN 28738 75 ST;	421103714	16	16	519	99 24 594 14	ANCHORING ROD CPL
WASHER DIN EN 28738 80 ST;	421103814	12	8	450	11 23 820 3	PIVOT PIECE CPL
WASHER DIN EN 28738 80 ST;	421103814	11	2	483	11 28 726 4	PIN CPL
WASHER DIN EN 28738 80 ST;	421103814	29	1	582	99 38 329 14	TIP BOOM CPL
WASHER DIN EN 28738 80 ST;	421103814	20	2	644	10 51 971 3	SELF-LOADING SYSTEM RFK
WASHER EN 14399-6 12 C45	460022703	37	14	75	11 24 773 5	HYDR POWER UNIT
WASHER EN 14399-6 12 C45	460022703	89	34	304	11 24 483 7	MOUNTING PARTS SUPERST
WASHER EN 14399-6 12 C45	460022703	5	4	332	99 29 389 14	SIDE COMPONENT
WASHER EN 14399-6 12 C45	460022703	5	4	333	99 29 392 14	SIDE COMPONENT
WASHER EN 14399-6 12 C45	460022703	14	16	335	99 29 386 14	BRACKET CPL
WASHER EN 14399-6 12 C45	460022703	14	16	336	99 29 434 14	BRACKET CPL
WASHER EN 14399-6 30 ST	421500614	7	30	408	10 55 876 0	CRAWLER CARRIER RIGHT CP
WASHER EN 14399-6 30 ST	421500614	7	30	417	10 55 876 1	CRAWLER CARRIER LEFT CP
WASHER ISO 7089	11219067	7	2	272	10 55 091 1	ADD-ON PRELIMINARY FUEL F
WASHER ISO 7089 10 A4	420001114	15	8	41	10 51 961 6	OIL COOLER INSTALLATION
WASHER ISO 7089 10 A4	420001114	70	44	44	10 56 070 1	TANK HYDR CPL
WASHER ISO 7089 10 A4	420001114	70	6	48	10 56 073 3	FUEL TANK CPL
WASHER ISO 7089 10 A4	420001114	18	4	60	10 56 067 3	BATTERY INSTALLATION CPL
WASHER ISO 7089 10 A4	420001114	4	8	62	10 56 069 4	MODULES INSTALLATION
WASHER ISO 7089 10 A4	420001114	70	42	164	11 24 113 8	MOTOR BEARING CPL
WASHER ISO 7089 10 A4	420001114	70	4	165	10 51 948 1	SUCTION PIPE OIL
WASHER ISO 7089 10 A4	420001114	70	6	167	10 57 532 2	INTAKE PIPE OIL CPL
WASHER ISO 7089 10 A4	420001114	73	28	255	11 24 114 0	COOLER INSTALLATION WATE
WASHER ISO 7089 10 A4	420001114	70	2	268	11 24 114 3	EXHAUST GAS SYSTEM
WASHER ISO 7089 10 A4	420001114	97	4	276	11 24 114 5	ASSEMBLY INSTAL.
WASHER ISO 7089 10 A4	420001114	71	11	280	11 24 114 6	COVER
WASHER ISO 7089 10 A4	420001114	55	40	284	11 24 409 0	PANELLING SUPERSTR. INSTA
WASHER ISO 7089 10 A4	420001114	12	36	298	10 54 591 0	MOTOR COWLING
WASHER ISO 7089 10 A4	420001114	78	53	304	11 24 483 7	MOUNTING PARTS SUPERST
WASHER ISO 7089 10 A4	420001114	14	16	308	10 52 656 0	MOUNTING PARTS
WASHER ISO 7089 10 A4	420001114	27	6	350	11 29 327 3	CABIN CPL
WASHER ISO 7089 10 A4	420001114	65	36	450	11 23 820 3	PIVOT PIECE CPL
WASHER ISO 7089 10 A4	420001114	13	2	479	99 29 588 14	SUPPORT
WASHER ISO 7089 10 A4	420001114	13	4	480	10 35 063 3	FASTENER
WASHER ISO 7089 10 A4	420001114	16	4	487	11 28 397 7	SUMP PAN CPL
WASHER ISO 7089 10 A4	420001114	16	4	488	11 28 397 8	SUMP PAN CPL
WASHER ISO 7089 10 A4	420001114	16	8	489	11 28 399 5	SUMP PAN CPL
WASHER ISO 7089 10 A4	420001114	16	8	490	11 28 399 7	SUMP PAN CPL
WASHER ISO 7089 10 A4	420001114	15	4	491	11 28 794 6	TRANSPORT LASHING
WASHER ISO 7089 10 A4	420001114	22	1	515	10 59 863 3	PENDULUM CPL
WASHER ISO 7089 10 A4	420001114	4	8	516	11 28 357 6	MOUNTING PARTS
WASHER ISO 7089 10 A4	420001114	10	2	522	99 30 800 14	HOIST LIMIT SWITCH INSTAL.
WASHER ISO 7089 10 A4	420001114	15	4	557	11 28 982 7	TRANSPORT LASHING
WASHER ISO 7089 10 A4	420001114	49	4	570	11 28 774 6	MOUNTING PARTS
WASHER ISO 7089 10 A4	420001114	17	8	577	99 48 521 14	TIP BOOM CPL
WASHER ISO 7089 10 A4	420001114	37	32	621	10 55 372 1	ROOF RAILING RFK
WASHER ISO 7089 10 A4	420001114	16	6	637	99 10 116 14	ROPE GUIDE
WASHER ISO 7089 10 A4	420001114	12	6	705	11 26 771 6	MOUNTING PARTS
WASHER ISO 7089 10 ST	10554336	70	1	169	11 24 113 9	MOTOR PRE-ASSEMBLY

Description	Item	Pos.	Quantity	Sheet	Assembly	Description
WASHER ISO 7089 12 A4	420001514	10	1	31	10 53 048 9	FUSE HOLDER
WASHER ISO 7089 12 A4	420001514	71	12	44	10 56 070 1	TANK HYDR CPL
WASHER ISO 7089 12 A4	420001514	20	2	58	10 58 163 4	CABIN SUSPENSION CPL
WASHER ISO 7089 12 A4	420001514	11	2	60	10 56 067 3	BATTERY INSTALLATION CPL
WASHER ISO 7089 12 A4	420001514	76	4	164	11 24 113 8	MOTOR BEARING CPL
WASHER ISO 7089 12 A4	420001514	70	20	168	10 58 017 0	RETURN PIPE
WASHER ISO 7089 12 A4	420001514	72	3	261	11 24 114 1	COOLER INSTALLATION CHA
WASHER ISO 7089 12 A4	420001514	8	2	385	10 53 756 0	LAMP HOLDER CPL
WASHER ISO 7089 12 A4	420001514	23	15	408	10 55 876 0	CRAWLER CARRIER RIGHT CP
WASHER ISO 7089 12 A4	420001514	23	15	417	10 55 876 1	CRAWLER CARRIER LEFT CP
WASHER ISO 7089 12 A4	420001514	23	24	419	11 23 548 1	CENTRE PART CPL
WASHER ISO 7089 12 A4	420001514	22	16	450	11 23 820 3	PIVOT PIECE CPL
WASHER ISO 7089 12 A4	420001514	25	12	525	11 24 336 5	PIVOT PIECE NEEDLE CPL
WASHER ISO 7089 12 A4	420001514	34	8	526	10 53 140 9	PIVOT PIECE EL
WASHER ISO 7089 12 A4	420001514	47	8	541	11 29 938 4	MOUNTING PARTS
WASHER ISO 7089 12 A4	420001514	18	2	577	99 48 521 14	TIP BOOM CPL
WASHER ISO 7089 12 A4	420001514	49	10	621	10 55 372 1	ROOF RAILING RFK
WASHER ISO 7089 12 A4	420001514	25	2	686	10 58 064 7	VIDEO MONITORING SYSTEM
WASHER ISO 7089 13	10289804	8	17	242	10 11 557 7	FLYWHEEL HOUSING MOUNT
WASHER ISO 7089 16	10544172	72	48	164	11 24 113 8	MOTOR BEARING CPL
WASHER ISO 7089 16	10544172	102	2	304	11 24 483 7	MOUNTING PARTS SUPERST
WASHER ISO 7089 16	10544172	14	4	341	10 51 968 2	SG SUPERSTRUCTURE
WASHER ISO 7089 16	10544172	36	12	408	10 55 876 0	CRAWLER CARRIER RIGHT CP
WASHER ISO 7089 16	10544172	36	12	417	10 55 876 1	CRAWLER CARRIER LEFT CP
WASHER ISO 7089 16	10544172	15	28	419	11 23 548 1	CENTRE PART CPL
WASHER ISO 7089 16	10544172	43	8	450	11 23 820 3	PIVOT PIECE CPL
WASHER ISO 7089 16	10544172	26	4	485	11 28 390 8	BOOM ACCESS
WASHER ISO 7089 16	10544172	26	4	499	11 28 583 8	BOOM ACCESS
WASHER ISO 7089 16	10544172	26	4	505	11 28 626 1	BOOM ACCESS
WASHER ISO 7089 16	10544172	51	2	533	11 29 426 7	MOUNTING PARTS
WASHER ISO 7089 16	10544172	20	8	665	11 89 568 6	SELF-LOADING SYSTEM RFK
WASHER ISO 7089 17/30X3 A4	4901893	71	4	169	11 24 113 9	MOTOR PRE-ASSEMBLY
WASHER ISO 7089 20	10544174	75	2	264	11 24 114 2	SUCTION UNIT AIR
WASHER ISO 7089 20	10544174	21	2	408	10 55 876 0	CRAWLER CARRIER RIGHT CP
WASHER ISO 7089 20	10544174	21	2	417	10 55 876 1	CRAWLER CARRIER LEFT CP
WASHER ISO 7089 20	10544174	19	4	419	11 23 548 1	CENTRE PART CPL
WASHER ISO 7089 20	10544174	14	4	424	11 22 050 0	WINCHES INSTALLATION
WASHER ISO 7089 20	10544174	14	4	439	11 22 050 1	WINCHES INSTALLATION
WASHER ISO 7089 20	10544174	15	8	473	11 24 444 4	A-FRAME 1 CPL
WASHER ISO 7089 20	10544174	17	8	606	10 51 743 9	ROPE LUG CPL RFK
WASHER ISO 7089 20	10544174	4	1	640	99 10 125 14	FORK
WASHER ISO 7089 24	10544176	33	12	408	10 55 876 0	CRAWLER CARRIER RIGHT CP
WASHER ISO 7089 24	10544176	33	12	417	10 55 876 1	CRAWLER CARRIER LEFT CP
WASHER ISO 7089 27	420002601	29	4	637	99 10 116 14	ROPE GUIDE
WASHER ISO 7089 3 A4	485546414	6	4	386	11 30 962 5	HOLDER CPL
WASHER ISO 7089 30	10544177	28	64	408	10 55 876 0	CRAWLER CARRIER RIGHT CP
WASHER ISO 7089 30	10544177	13	4	410	10 55 716 2	GUIDE WHEEL CPL
WASHER ISO 7089 30	10544177	28	64	417	10 55 876 1	CRAWLER CARRIER LEFT CP
WASHER ISO 7089 36 MS;	420051514	24	4	582	99 38 329 14	TIP BOOM CPL
WASHER ISO 7089 4 A4	420000314	4	3	384	97 07 857 03	SPIRIT LEVEL ASSY.
WASHER ISO 7089 42	420003714	36	4	473	11 24 444 4	A-FRAME 1 CPL
WASHER ISO 7089 42	420003714	13	2	491	11 28 794 6	TRANSPORT LASHING
WASHER ISO 7089 42	420003714	27	10	521	99 23 398 14	ROLLER SET
WASHER ISO 7089 42	420003714	13	2	557	11 28 982 7	TRANSPORT LASHING
WASHER ISO 7089 48	420004001	53	2	570	11 28 774 6	MOUNTING PARTS
WASHER ISO 7089 48	420004001	15	2	582	99 38 329 14	TIP BOOM CPL
WASHER ISO 7089 48	420004001	15	2	631	91 92 763 14	HOOK 2 RFK
WASHER ISO 7089 5 A4	420005214	13	2	53	11 26 557 2	MOUNTING PARTS
WASHER ISO 7089 5 A4	420005214	11	8	61	11 31 093 2	LIMIT SWITCH INSTALLATION
WASHER ISO 7089 5 A4	420005214	5	40	62	10 56 069 4	MODULES INSTALLATION

Description	Item	Pos.	Quantity	Sheet	Assembly	Description
WASHER ISO 7089 5 A4	420005214	90	2	276	11 24 114 5	ASSEMBLY INSTAL.
WASHER ISO 7089 5 A4	420005214	63	16	450	11 23 820 3	PIVOT PIECE CPL
WASHER ISO 7089 5 A4	420005214	33	8	512	11 28 629 9	MOUNTING PARTS
WASHER ISO 7089 5 A4	420005214	14	16	513	11 28 610 5	RETAINING DEVICE CPL
WASHER ISO 7089 5 A4	420005214	32	9	665	11 89 568 6	SELF-LOADING SYSTEM RFK
WASHER ISO 7089 56	420004501	18	8	542	10 59 968 1	ANCHORING ROD CPL
WASHER ISO 7089 6 A4	420000414	60	4	34	10 56 645 8	TERMINAL BOX
WASHER ISO 7089 6 A4	420000414	91	33	276	11 24 114 5	ASSEMBLY INSTAL.
WASHER ISO 7089 6 A4	420000414	44	10	284	11 24 409 0	PANELLING SUPERSTR. INSTA
WASHER ISO 7089 6 A4	420000414	23	18	350	11 29 327 3	CABIN CPL
WASHER ISO 7089 6 A4	420000414	7	8	385	10 53 756 0	LAMP HOLDER CPL
WASHER ISO 7089 6 A4	420000414	50	6	408	10 55 876 0	CRAWLER CARRIER RIGHT CP
WASHER ISO 7089 6 A4	420000414	50	6	417	10 55 876 1	CRAWLER CARRIER LEFT CP
WASHER ISO 7089 6 A4	420000414	30	24	419	11 23 548 1	CENTRE PART CPL
WASHER ISO 7089 6 A4	420000414	12	3	424	11 22 050 0	WINCHES INSTALLATION
WASHER ISO 7089 6 A4	420000414	12	3	439	11 22 050 1	WINCHES INSTALLATION
WASHER ISO 7089 6 A4	420000414	64	56	450	11 23 820 3	PIVOT PIECE CPL
WASHER ISO 7089 6 A4	420000414	12	36	459	10 58 193 7	GRATING CPL
WASHER ISO 7089 6 A4	420000414	29	18	473	11 24 444 4	A-FRAME 1 CPL
WASHER ISO 7089 6 A4	420000414	17	1	487	11 28 397 7	SUMP PAN CPL
WASHER ISO 7089 6 A4	420000414	17	1	488	11 28 397 8	SUMP PAN CPL
WASHER ISO 7089 6 A4	420000414	17	1	489	11 28 399 5	SUMP PAN CPL
WASHER ISO 7089 6 A4	420000414	17	1	490	11 28 399 7	SUMP PAN CPL
WASHER ISO 7089 6 A4	420000414	69	12	525	11 24 336 5	PIVOT PIECE NEEDLE CPL
WASHER ISO 7089 6 A4	420000414	24	4	526	10 53 140 9	PIVOT PIECE EL
WASHER ISO 7089 6 A4	420000414	12	8	550	99 31 679 14	SUPPORT SYSTEM CPL
WASHER ISO 7089 6 A4	420000414	46	4	570	11 28 774 6	MOUNTING PARTS
WASHER ISO 7089 6 A4	420000414	3	10	599	11 22 322 6	MODEM CPL RFK
WASHER ISO 7089 6 A4	420000414	71	2	604	11 29 444 5	HEATING RFK
WASHER ISO 7089 6 A4	420000414	26	2	606	10 51 743 9	ROPE LUG CPL RFK
WASHER ISO 7089 6 A4	420000414	34	34	621	10 55 372 1	ROOF RAILING RFK
WASHER ISO 7089 6 A4	420000414	18	6	680	11 22 344 2	CAMERA INSTALLATION
WASHER ISO 7089 8 A4	420001014	14	4	53	11 26 557 2	MOUNTING PARTS
WASHER ISO 7089 8 A4	420001014	67	6	58	10 58 163 4	CABIN SUSPENSION CPL
WASHER ISO 7089 8 A4	420001014	75	16	164	11 24 113 8	MOTOR BEARING CPL
WASHER ISO 7089 8 A4	420001014	71	6	255	11 24 114 0	COOLER INSTALLATION WATE
WASHER ISO 7089 8 A4	420001014	70	4	264	11 24 114 2	SUCTION UNIT AIR
WASHER ISO 7089 8 A4	420001014	70	4	270	11 24 114 4	FUEL SYSTEM
WASHER ISO 7089 8 A4	420001014	92	26	276	11 24 114 5	ASSEMBLY INSTAL.
WASHER ISO 7089 8 A4	420001014	34	21	282	11 24 409 0	PANELLING SUPERSTR. INSTA
WASHER ISO 7089 8 A4	420001014	16	12	298	10 54 591 0	MOTOR COWLING
WASHER ISO 7089 8 A4	420001014	87	26	304	11 24 483 7	MOUNTING PARTS SUPERST
WASHER ISO 7089 8 A4	420001014	14	2	311	10 51 969 7	NEEDLE LUFFING WINCH
WASHER ISO 7089 8 A4	420001014	17	6	341	10 51 968 2	SG SUPERSTRUCTURE
WASHER ISO 7089 8 A4	420001014	20	28	350	11 29 327 3	CABIN CPL
WASHER ISO 7089 8 A4	420001014	5	2	386	11 30 962 5	HOLDER CPL
WASHER ISO 7089 8 A4	420001014	12	6	419	11 23 548 1	CENTRE PART CPL
WASHER ISO 7089 8 A4	420001014	44	18	450	11 23 820 3	PIVOT PIECE CPL
WASHER ISO 7089 8 A4	420001014	14	8	461	99 34 198 14	LIEBHERR SIGN
WASHER ISO 7089 8 A4	420001014	22	4	470	11 27 536 5	TILT-BACK SUPPORTS INSTAL
WASHER ISO 7089 8 A4	420001014	15	4	495	11 23 292 2	SUPPORT CPL
WASHER ISO 7089 8 A4	420001014	13	4	522	99 30 800 14	HOIST LIMIT SWITCH INSTAL.
WASHER ISO 7089 8 A4	420001014	61	4	525	11 24 336 5	PIVOT PIECE NEEDLE CPL
WASHER ISO 7089 8 A4	420001014	38	2	541	11 29 938 4	MOUNTING PARTS
WASHER ISO 7089 8 A4	420001014	48	6	570	11 28 774 6	MOUNTING PARTS
WASHER ISO 7089 8 A4	420001014	35	14	577	99 48 521 14	TIP BOOM CPL
WASHER ISO 7089 8 A4	420001014	72	10	604	11 29 444 5	HEATING RFK
WASHER ISO 7089 8 A4	420001014	48	82	621	10 55 372 1	ROOF RAILING RFK
WASHER ISO 7089 8 A4	420001014	13	12	623	11 24 147 8	UC PLATFORM
WASHER ISO 7089 8 A4	420001014	19	4	665	11 89 568 6	SELF-LOADING SYSTEM RFK

Description	Item	Pos.	Quantity	Sheet	Assembly	Description
WASHER ISO 7089 8 A4	420001014	28	6	686	10 58 064 7	VIDEO MONITORING SYSTEM
WASHER ISO 7089 8 A4	420001014	7	1	687	10 57 848 6	MONITOR CABIN ADD-ON
WASHER ISO 7089 8 A4	420001014	7	4	698	11 22 037 2	FOOT PEDAL EL INSTALLATIO
WASHER ISO 7089 8 A4	420001014	15	3	706	10 52 293 0	SG TACHOGENERATOR RFK
WASHER ISO 7089 8 A4	420001014	14	2	710	10 52 155 4	REFUELLING SYSTEM RFK
WASHER ISO 7092 6 CU;	420250114	6	4	706	10 52 293 0	SG TACHOGENERATOR RFK
WASHER ISO 7093-1 10 A4	10540511	14	14	41	10 51 961 6	OIL COOLER INSTALLATION
WASHER ISO 7093-1 10 A4	10540511	7	2	50	10 55 268 1	DRIVER INSTALLATION
WASHER ISO 7093-1 10 A4	10540511	55	4	58	10 58 163 4	CABIN SUSPENSION CPL
WASHER ISO 7093-1 10 A4	10540511	4	4	60	10 56 067 3	BATTERY INSTALLATION CPL
WASHER ISO 7093-1 10 A4	10540511	70	51	280	11 24 114 6	COVER
WASHER ISO 7093-1 10 A4	10540511	26	134	282	11 24 409 0	PANELLING SUPERSTR. INSTA
WASHER ISO 7093-1 10 A4	10540511	26	89	300	11 24 922 2	COVER UNDERSIDE
WASHER ISO 7093-1 10 A4	10540511	77	125	304	11 24 483 7	MOUNTING PARTS SUPERST
WASHER ISO 7093-1 10 A4	10540511	40	8	350	11 29 327 3	CABIN CPL
WASHER ISO 7093-1 10 A4	10540511	86	16	451	11 23 820 3	PIVOT PIECE CPL
WASHER ISO 7093-1 10 A4	10540511	16	2	479	99 29 588 14	SUPPORT
WASHER ISO 7093-1 10 A4	10540511	15	2	487	11 28 397 7	SUMP PAN CPL
WASHER ISO 7093-1 10 A4	10540511	15	2	488	11 28 397 8	SUMP PAN CPL
WASHER ISO 7093-1 10 A4	10540511	15	4	489	11 28 399 5	SUMP PAN CPL
WASHER ISO 7093-1 10 A4	10540511	15	4	490	11 28 399 7	SUMP PAN CPL
WASHER ISO 7093-1 10 A4	10540511	35	8	512	11 28 629 9	MOUNTING PARTS
WASHER ISO 7093-1 10 A4	10540511	16	8	554	11 28 979 0	GRATING CARRIER
WASHER ISO 7093-1 10 A4	10540511	14	2	556	11 28 544 3	SUPPORT SYSTEM CPL
WASHER ISO 7093-1 10 A4	10540511	46	2	577	99 48 521 14	TIP BOOM CPL
WASHER ISO 7093-1 10 A4	10540511	44	78	621	10 55 372 1	ROOF RAILING RFK
WASHER ISO 7093-1 10 A4	10540511	12	2	648	99 35 606 14	MOUNTING LINK CPL
WASHER ISO 7093-1 10 A4	10540511	7	4	650	11 23 619 7	SELF-LOADING SYSTEM RFK
WASHER ISO 7093-1 10 A4	10540511	15	4	705	11 26 771 6	MOUNTING PARTS
WASHER ISO 7093-1 12 A4	10540512	34	9	58	10 58 163 4	CABIN SUSPENSION CPL
WASHER ISO 7093-1 12 A4	10540512	71	11	304	11 24 483 7	MOUNTING PARTS SUPERST
WASHER ISO 7093-1 12 A4	10540512	14	2	388	99 18 041 14	LASHING SUPERSTRUCTURE
WASHER ISO 7093-1 16	10544173	6	4	50	10 55 268 1	DRIVER INSTALLATION
WASHER ISO 7093-1 16	10544173	74	8	451	11 23 820 3	PIVOT PIECE CPL
WASHER ISO 7093-1 16	10544173	27	4	485	11 28 390 8	BOOM ACCESS
WASHER ISO 7093-1 16	10544173	27	4	499	11 28 583 8	BOOM ACCESS
WASHER ISO 7093-1 16	10544173	27	4	505	11 28 626 1	BOOM ACCESS
WASHER ISO 7093-1 20	10544175	3	1	433	10 57 462 9	PIN CPL
WASHER ISO 7093-1 4 A4	10540497	44	2	715	10 52 155 9	MODULE REFUELLING SYSTE
WASHER ISO 7093-1 5 A4	485570714	23	4	60	10 56 067 3	BATTERY INSTALLATION CPL
WASHER ISO 7093-1 6 A4	10540500	73	6	268	11 24 114 3	EXHAUST GAS SYSTEM
WASHER ISO 7093-1 6 A4	10540500	67	6	304	11 24 483 7	MOUNTING PARTS SUPERST
WASHER ISO 7093-1 6 A4	10540500	27	9	686	10 58 064 7	VIDEO MONITORING SYSTEM
WASHER ISO 7093-1 8 A4	10540510	12	2	56	92 65 477 14	FIRE EXTINGUISHER RFK
WASHER ISO 7093-1 8 A4	10540510	16	4	58	10 58 163 4	CABIN SUSPENSION CPL
WASHER ISO 7093-1 8 A4	10540510	43	13	284	11 24 409 0	PANELLING SUPERSTR. INSTA
WASHER ISO 7093-1 8 A4	10540510	86	34	304	11 24 483 7	MOUNTING PARTS SUPERST
WASHER ISO 7093-1 8 A4	10540510	27	4	320	10 51 968 6	LUG SUPERSTRUCTURE CPL
WASHER ISO 7093-1 8 A4	10540510	12	2	335	99 29 386 14	BRACKET CPL
WASHER ISO 7093-1 8 A4	10540510	12	2	336	99 29 434 14	BRACKET CPL
WASHER ISO 7093-1 8 A4	10540510	79	49	451	11 23 820 3	PIVOT PIECE CPL
WASHER ISO 7093-1 8 A4	10540510	28	5	485	11 28 390 8	BOOM ACCESS
WASHER ISO 7093-1 8 A4	10540510	28	5	499	11 28 583 8	BOOM ACCESS
WASHER ISO 7093-1 8 A4	10540510	28	5	505	11 28 626 1	BOOM ACCESS
WASHER ISO 7093-1 8 A4	10540510	34	4	512	11 28 629 9	MOUNTING PARTS
WASHER ISO 7093-1 8 A4	10540510	15	4	513	11 28 610 5	RETAINING DEVICE CPL
WASHER ISO 7093-1 8 A4	10540510	26	12	525	11 24 336 5	PIVOT PIECE NEEDLE CPL
WASHER ISO 7093-1 8 A4	10540510	14	6	526	10 53 140 9	PIVOT PIECE EL
WASHER ISO 7093-1 8 A4	10540510	17	4	554	11 28 979 0	GRATING CARRIER
WASHER ISO 7093-1 8 A4	10540510	47	2	570	11 28 774 6	MOUNTING PARTS

Description	Item	Pos.	Quantity	Sheet	Assembly	Description
WASHER ISO 7093-1 8 A4	10540510	26	8	650	11 23 619 7	SELF-LOADING SYSTEM RFK
WASHER ISO 7093-1 8 A4	10540510	32	4	686	10 58 064 7	VIDEO MONITORING SYSTEM
WASHER RD 34/20.4X5 30 CRM	422010414	38	20	75	11 24 773 5	HYDR POWER UNIT
WASHER SET	9885924	39	1	105	98 89 984	REPAIR KIT DRIVING MECHAN
WASHER SET	9885924	39	1	109	98 89 983	REPAIR KIT DRIVING MECHAN
WASHER SET	9885937	29	1	123	10 13 802 6	RK CYL.+CONTROL PLATE+SH
WATER DRAIN PLUG	602501208	55	1	34	10 56 645 8	TERMINAL BOX
WATER HEATING SYSTEM	11080525	3	1	604	11 29 444 5	HEATING RFK
WATER PUMP WITH FASTENIN	10142734	370	1	172	10 14 032 7	DIESEL ENGINE
WATER PUMP, PRE-ASSEMB	10150386	1	1	229	10 14 273 4	WATER PUMP WITH FASTENIN
WATER SENSOR	10331335	13	1	273	10 30 300 7	FUEL PREFILTER
WATER VALVE	10584671	50	1	378	59 22 930 14	AIR CONDITIONER
WATER VALVE	11082158	12	2	275	11 24 114 5	ASSEMBLY INSTAL.
WATER VALVE	592293114	51	1	379	10 58 467 1	WATER VALVE
WEIGHT	388283108	18	1	522	99 30 800 14	HOIST LIMIT SWITCH INSTAL.
WEIGHT	388283208	19	1	522	99 30 800 14	HOIST LIMIT SWITCH INSTAL.
WELD PLATE	11275578	21	2	470	11 27 536 5	TILT-BACK SUPPORTS INSTAL
WELD PLATE	949741314	31	1	533	11 29 426 7	MOUNTING PARTS
WELD PLATE	949742714	32	4	533	11 29 426 7	MOUNTING PARTS
WELD PLATE	949752914	18	2	541	11 29 938 4	MOUNTING PARTS
WELD PLATE	969329314	40	1	8	11 29 618 6	SUPERSTRUCTURE HYDR
WHEEL ST.CONST.	385260014	2	2	570	11 28 774 6	MOUNTING PARTS
WINCH	10530398	10	1	424	11 22 050 0	WINCHES INSTALLATION
WINCH	10530398	10	1	439	11 22 050 1	WINCHES INSTALLATION
WINCH	10551563	10	1	320	10 51 968 6	LUG SUPERSTRUCTURE CPL
WINCH	592069414	27	1	606	10 51 743 9	ROPE LUG CPL RFK
WINCH	969624801	10	1	311	10 51 969 7	NEEDLE LUFFING WINCH
WINCH 1 CRANE	11262605	41	1	2	01 38 281 14	LR 1300 SX
WINCH 1 EL	11216342	3	1	423	11 26 260 5	WINCH 1 CRANE
WINCH 1 EL	11216342	3	1	438	11 26 261 0	WINCH 2 CRANE
WINCH 1 HYDR	11262606	2	1	423	11 26 260 5	WINCH 1 CRANE
WINCH 2 CRANE	11262610	45	1	2	01 38 281 14	LR 1300 SX
WINCH 2 HYDR	11262611	2	1	438	11 26 261 0	WINCH 2 CRANE
WINCH FRAME	918678214	29	1	606	10 51 743 9	ROPE LUG CPL RFK
WINCH FRAME	969654301	20	1	315	96 96 248 01	WINCH
WINCH SYNCHRONIZATION E	971460103	651	1	4	01 38 281 14	LR 1300 SX
WINCH TRESTLE	11893215	5	1	425	10 53 039 8	WINCH
WINCHES INSTALLATION	11220500	1	1	423	11 26 260 5	WINCH 1 CRANE
WINCHES INSTALLATION	11220501	1	1	438	11 26 261 0	WINCH 2 CRANE
WIND TRANSMITTER	692815514	31	1	517	97 07 204 03	ANEMOMETER EL RFK
WING SCREW DIN 316 M10X80	485559814	14	2	60	10 56 067 3	BATTERY INSTALLATION CPL
WIPER ARM	592287914	19	1	373	59 22 871 14	FRONT WINDOW CPL
WIPER ARM	592288814	46	1	366	10 35 250 8	CABIN
WIPER BLADE	592288014	20	1	373	59 22 871 14	FRONT WINDOW CPL
WIPER BLADE	592288914	47	1	366	10 35 250 8	CABIN
WIPER MOTOR	592287614	16	1	373	59 22 871 14	FRONT WINDOW CPL
WIPER MOTOR	592288714	45	1	366	10 35 250 8	CABIN
WIRED END FERRULE	602307708	100	2	34	10 56 645 8	TERMINAL BOX
WIRING HARNESS	10226573	3	1	311	10 51 969 7	NEEDLE LUFFING WINCH
WIRING HARNESS	10226574	3	1	606	10 51 743 9	ROPE LUG CPL RFK
WIRING HARNESS	10519084	203	1	352	11 27 973 6	CABIN EL
WIRING HARNESS	10540846	98	1	352	11 27 973 6	CABIN EL
WIRING HARNESS	10564279	11	1	695	99 21 473 14	DRIVERS SEAT EL RFK
WIRING HARNESS	11239085	11	1	35	11 23 908 2	CONTROL CONSOLE
WIRING HARNESS	11265111	11	1	456	91 92 528 14	CABLE DRUM
WIRING HARNESS	11266528	11	1	602	11 26 652 6	AUXILIARY HEATING EL RFK
WIRING HARNESS ASSEMBLY	10135553	8	1	248	10 15 028 8	CABLE HARNESS MOUNTING
WIRING HARNESS ASSEMBLY	10150287	2	1	248	10 15 028 8	CABLE HARNESS MOUNTING
WORK LIGHT	10224500	100	4	29	11 24 519 0	SUPERSTRUCTURE EL
WORK LIGHT	7027205	60	2	29	11 24 519 0	SUPERSTRUCTURE EL

Description	Item	Pos.	Quantity	Sheet	Assembly	Description
WORK LIGHT	7027205	50	3	351	11 27 973 6	CABIN EL
WORK LIGHT	7027205	32	1	681	10 50 775 0	CAMERA MONITORING
WORK LIGHT	7027205	37	1	683	10 53 246 1	CAMERA MONITORING
WP	10223446	19	1	290	10 57 883 5	DOOR
WP	10223447	3	1	290	10 57 883 5	DOOR
WP	10223448	11	1	290	10 57 883 5	DOOR
WP	10223449	16	1	290	10 57 883 5	DOOR
WP	10336682	4	1	282	11 24 409 0	PANELLING SUPERSTR. INSTA
WP	10351547	7	7	286	11 24 409 1	COVERS
WP	10351548	8	1	286	11 24 409 1	COVERS
WP	10537566	3	1	385	10 53 756 0	LAMP HOLDER CPL
WP	10572706	2	2	50	10 55 268 1	DRIVER INSTALLATION
WP	10573951	10	1	706	10 52 293 0	SG TACHOGENERATOR RFK
WP	10574631	2	1	433	10 57 462 9	PIN CPL
WP	10575306	4	1	254	11 24 114 0	COOLER INSTALLATION WATE
WP	10575307	5	1	254	11 24 114 0	COOLER INSTALLATION WATE
WP	10575566	10	1	261	11 24 114 1	COOLER INSTALLATION CHA
WP	10575567	11	1	261	11 24 114 1	COOLER INSTALLATION CHA
WP	10577229	40	1	275	11 24 114 5	ASSEMBLY INSTAL.
WP	10586253	50	1	58	10 58 163 4	CABIN SUSPENSION CPL
WP	10599571	46	1	302	11 24 483 7	MOUNTING PARTS SUPERST
WP	10599757	6	1	254	11 24 114 0	COOLER INSTALLATION WATE
WP	10599758	7	1	254	11 24 114 0	COOLER INSTALLATION WATE
WP	10599759	8	1	254	11 24 114 0	COOLER INSTALLATION WATE
WP	10599854	49	1	302	11 24 483 7	MOUNTING PARTS SUPERST
WP	11223086	1	1	599	11 22 322 6	MODEM CPL RFK
WP	11245760	4	4	624	11 24 575 5	PEDESTAL
WP	11248432	10	1	268	11 24 114 3	EXHAUST GAS SYSTEM
WP	11248433	11	1	268	11 24 114 3	EXHAUST GAS SYSTEM
WP	11250985	3	1	262	11 28 574 7	WP
WP	11261002	5	2	169	11 24 113 9	MOTOR PRE-ASSEMBLY
WP	11270062	15	1	604	11 29 444 5	HEATING RFK
WP	11271007	6	1	604	11 29 444 5	HEATING RFK
WP	11279013	43	1	275	11 24 114 5	ASSEMBLY INSTAL.
WP	11285709	4	1	262	11 28 574 7	WP
WP	11285747	3	1	261	11 24 114 1	COOLER INSTALLATION CHA
WP	11309628	2	1	386	11 30 962 5	HOLDER CPL
WP	289059414	13	1	389	11 23 547 8	UC CPL
WP	385031714	15	2	606	10 51 743 9	ROPE LUG CPL RFK
WP	949892214	20	1	320	10 51 968 6	LUG SUPERSTRUCTURE CPL
WP	953431803	3	2	635	95 34 317 03	CABLE HOLDER RFK
WP	953431903	2	4	635	95 34 317 03	CABLE HOLDER RFK
WP	953432003	1	1	635	95 34 317 03	CABLE HOLDER RFK
WP	954229003	101	1	304	11 24 483 7	MOUNTING PARTS SUPERST
WP	954373603	31	2	408	10 55 876 0	CRAWLER CARRIER RIGHT CP
WP	954373603	31	2	417	10 55 876 1	CRAWLER CARRIER LEFT CP
WP	956033214	3	2	513	11 28 610 5	RETAINING DEVICE CPL
WP	956067414	5	2	577	99 48 521 14	TIP BOOM CPL
WP	956319314	30	4	577	99 48 521 14	TIP BOOM CPL
WP	956810314	26	1	521	99 23 398 14	ROLLER SET
WP	957104314	38	1	633	10 51 176 9	NEEDLE BOOM CPL
WP	959332514	90	1	451	11 23 820 3	PIVOT PIECE CPL
WP	970831503	14	2	450	11 23 820 3	PIVOT PIECE CPL
WP	970854303	16	2	512	11 28 629 9	MOUNTING PARTS
WP	970854303	53	2	525	11 24 336 5	PIVOT PIECE NEEDLE CPL
WP	971323803	28	1	637	99 10 116 14	ROPE GUIDE
WP	971508203	10	1	574	10 55 753 7	HOIST LIMITSWITCH LEFT IN
WP	971508203	11	1	577	99 48 521 14	TIP BOOM CPL
WP	971508203	43	1	633	10 51 176 9	NEEDLE BOOM CPL
WP	971511703	10	1	575	10 55 757 6	HOIST LIMITSWITCH RIGHT I

Description	Item	Pos.	Quantity	Sheet	Assembly	Description
WRENCH SOCKET 36 X 1 "	885380314	55	1	443	10 56 187 5	TOOL EQUIPMENT

Bezeichnung	Artikel	Pos.	Menge	Blatt	Baugruppe	Bezeichnung
A-BOCK 1 KPL	11244444	10	1	471	11 23 937 8	A-BOCK 1 MONTAGEEINHEIT
A-BOCK 1 MONTAGEEINHEIT	11239378	63	1	2	01 38 281 14	LR 1300 SX
A-BOCK 2 KPL	11244759	11	1	523	11 24 618 2	NADELANBAUTEILE
A-BOCK 3 KPL	11246116	12	1	523	11 24 618 2	NADELANBAUTEILE
A-BOCK AUFRICHTZYL EINBA	10519694	51	1	6	11 24 047 9	OW KPL
A-BOCK AUFRICHTZYL HYDR	10519695	2	1	64	10 51 969 4	A-BOCK AUFRICHTZYL EINBA
A-BOCK EL	10531207	3	1	473	11 24 444 4	A-BOCK 1 KPL
A-BOCK EL	11313817	3	1	538	11 24 611 6	A-BOCK 3 KPL
ABDECKKAPPE	10036950	17	1	381	70 24 996	SITZRAHMEN
ABDECKKAPPE	10036950	17	2	693	70 28 516	SITZRAHMEN
ABDECKKAPPE	10129382	7	1	210	10 13 508 0	DRUCKROHRSTUTZEN
ABDECKKAPPE	10129383	8	1	210	10 13 508 0	DRUCKROHRSTUTZEN
ABDECKKAPPE	10129385	10	1	210	10 13 508 0	DRUCKROHRSTUTZEN
ABDECKKAPPE	11694640	9	1	210	10 13 508 0	DRUCKROHRSTUTZEN
ABDECKKAPPE	605618014	82	2	566	10 57 624 5	KABELSATZ
ABDECKUNG	10530487	7	1	31	10 53 048 9	SICHERUNGSHALTER
ABDECKUNG	10583346	10	1	280	11 24 114 6	ABDECKUNG
ABDECKUNG	10583347	11	1	280	11 24 114 6	ABDECKUNG
ABDECKUNG	11236709	3	1	700	11 21 750 0	VERFLUESSIGER
ABDECKUNG	11241146	90	1	73	11 24 048 0	ZENTRALAGGREGAT
ABDECKUNG	11252203	1	1	280	11 24 114 6	ABDECKUNG
ABDECKUNG	11252205	16	1	280	11 24 114 6	ABDECKUNG
ABDECKUNG	11252206	17	1	280	11 24 114 6	ABDECKUNG
ABDECKUNG	11252207	2	1	280	11 24 114 6	ABDECKUNG
ABDECKUNG	11252208	8	1	280	11 24 114 6	ABDECKUNG
ABDECKUNG	11252211	3	1	280	11 24 114 6	ABDECKUNG
ABDECKUNG	11252213	9	1	280	11 24 114 6	ABDECKUNG
ABDECKUNG	11252214	4	1	280	11 24 114 6	ABDECKUNG
ABDECKUNG	11252215	5	1	280	11 24 114 6	ABDECKUNG
ABDECKUNG	11252216	6	1	280	11 24 114 6	ABDECKUNG
ABDECKUNG	11262861	12	1	280	11 24 114 6	ABDECKUNG
ABDECKUNG	592287814	18	1	373	59 22 871 14	FRONTSCHEIBE KPL
ABDECKUNG ANBAU	10146117	342	1	172	10 14 032 7	DIESELMOTOR
ABDECKUNG ANBAU	10146120	1	1	228	10 14 611 7	ABDECKUNG ANBAU
ABDECKUNG UNTERSEITE	11249222	12	1	71	11 26 560 6	AGGREGAT DIESELMOTOR
ABGASANLAGE	11241143	40	1	73	11 24 048 0	ZENTRALAGGREGAT
ABGASENDROHR	11248175	7	1	268	11 24 114 3	ABGASANLAGE
ABGASKLAPPE	10153118	1	1	237	10 14 511 2	ABGASSTUTZEN ANBAU
ABGASKRUEMMER	10141440	1	1	235	10 14 144 3	ABGASROHR VORM.
ABGASKRUEMMER	10141442	2	2	235	10 14 144 3	ABGASROHR VORM.
ABGASMISCHROHR	10148669	4	1	268	11 24 114 3	ABGASANLAGE
ABGASROHR ANBAU	10141444	410	1	172	10 14 032 7	DIESELMOTOR
ABGASROHR KPL	11248166	6	1	268	11 24 114 3	ABGASANLAGE
ABGASROHR KPL	11271008	8	1	604	11 29 444 5	HEIZUNG NRS
ABGASROHR KPL	11271011	9	1	604	11 29 444 5	HEIZUNG NRS
ABGASROHR VORM.	10141443	1	1	234	10 14 144 4	ABGASROHR ANBAU
ABGASSTUTZEN	10146274	3	1	237	10 14 511 2	ABGASSTUTZEN ANBAU
ABGASSTUTZEN ANBAU	10145112	432	1	172	10 14 032 7	DIESELMOTOR
ABLAGE	10349600	6	2	550	99 31 679 14	ABSTUETZUNG KPL
ABLASSHAHN	11696074	16	1	273	10 30 300 7	KRAFTSTOFFVORFILTER
ABLASSSCHLAUCH KPL	917665814	31	1	443	10 56 187 5	WERKZEUGAUSRUESTUNG
ABSAUGPUMPE MIT BEFEST.	10133947	141	1	171	10 14 032 7	DIESELMOTOR
ABSAUGPUMPE VORM.	10133823	1	1	203	10 13 394 7	ABSAUGPUMPE MIT BEFEST.
ABSCHALTVENTIL	11067304	5	1	84	11 21 991 0	PUMPENGEHAEUSE
ABSCHLUSSPLATTE	602153014	53	1	708	10 56 013 7	FREMDEINSPEISUNG BATTERI
ABSCHLUSSPLATTE	602730714	25	3	34	10 56 645 8	KLEMMKASTEN
ABSCHLUSSPLATTE	602812714	26	1	34	10 56 645 8	KLEMMKASTEN
ABSCHLUSSPLATTE	602812714	87	1	354	10 55 963 5	SCHALTSCHR X1
ABSCHLUSSPLATTE	693182314	78	2	354	10 55 963 5	SCHALTSCHR X1
ABSPERRORGAN	10526733	11	1	44	10 56 070 1	TANK HYDR KPL

Bezeichnung	Artikel	Pos.	Menge	Blatt	Baugruppe	Bezeichnung
ABSTANDHALTER	11262039	10	1	705	11 26 771 6	MONTAGETEILE
ABSTREIFER	10352319	60	1	669	59 21 826 14	ABSTUETZZYL
ABSTREIFER	592031814	9	1	690	59 20 008 14	DOPPELWIRKZYL
ABSTREIFER	592181614	18	1	548	59 21 280 14	EINFACHWIRKZYL
ABSTREIFER	749073614	90	1	669	59 21 826 14	ABSTUETZZYL
ABSTREIFRING	726054214	13	1	403	51 33 141 14	DOPPELWIRKZYL
ABSTREIFRING	726054414	9	1	23	51 33 139 14	DOPPELWIRKZYL
ABSTUETZPLATTE KPL	990759714	12	4	671	11 89 568 8	SELBSTVERLADESYSTEM NR
ABSTUETZUNG	919014814	23	1	637	99 10 116 14	SEILFUEHRUNG
ABSTUETZUNG	919017314	24	1	637	99 10 116 14	SEILFUEHRUNG
ABSTUETZUNG KPL	11285443	14	5	553	11 28 978 7	AL BEGEHUNG
ABSTUETZUNG KPL	11285443	14	6	560	11 28 979 2	AL BEGEHUNG
ABSTUETZUNG KPL	993167914	12	1	544	10 53 145 5	RUECKFALLSTUETZE NADEL
ABSTUETZUNG SCHWK	992403814	3	1	550	99 31 679 14	ABSTUETZUNG KPL
ABSTUETZUNG SCHWK	993317814	4	1	550	99 31 679 14	ABSTUETZUNG KPL
ABSTUETZZYL	592182614	1	4	668	11 23 524 8	VERROHRUNG HYDR
ABTRIEB KPL	540270414	23	1	612	59 20 694 14	WINDE
ACHSE	10097986	4	1	413	79 05 233 14	TRAGROLLE KPL
ACHSE	11310955	13	2	485	11 28 390 8	AL BEGEHUNG
ACHSE	11310955	13	2	499	11 28 583 8	AL BEGEHUNG
ACHSE	11310955	13	2	505	11 28 626 1	AL BEGEHUNG
ACHSE	918539614	17	1	320	10 51 968 6	EZW OW EINBAU KPL
ACHSE KPL	991413814	1	1	475	99 14 137 14	UMLENKROLLE KPL
ACHSE SCHWK	918684114	3	2	533	11 29 426 7	MONTAGETEILE
ACHSE SCHWK	918684114	14	1	541	11 29 938 4	MONTAGETEILE
ACHSE SCHWK	970901603	14	2	637	99 10 116 14	SEILFUEHRUNG
ACHSE SCHWK	993191014	2	1	533	11 29 426 7	MONTAGETEILE
ACHSHALTER	703003014	28	1	450	11 23 820 3	ANLENKSTUECK KPL
ACHSHALTER	703003014	6	2	513	11 28 610 5	ARRETIERUNG KPL
ACHSHALTER	954372503	14	4	419	11 23 548 1	MITTELTEIL KPL
ACHSHALTER	956378214	27	2	450	11 23 820 3	ANLENKSTUECK KPL
ADAPTER	10121091	1	1	101	90 74 418	REGELVENTIL
ADAPTER	11221276	5	1	143	11 22 126 8	PUMPENELEMENT
ADAPTER	570950308	1	1	149	70 19 834	ADAPTER
ADAPTER	7019834	4	1	143	11 22 126 8	PUMPENELEMENT
ADAPTER 5X84X90 PA 6	10549545	53	1	350	11 29 327 3	KABINE KPL
ADAPTERBLECH	11220468	5	1	698	11 22 037 2	FUSSPEDAL EL EINBAU
ADAPTERBLECH	11223693	5	2	365	11 22 369 1	FUSSPEDAL EL EINBAU
ADAPTERBLECH	959571914	14	2	644	10 51 971 3	SELBSTVERLADESYSTEM NR
ADAPTERRAHMEN	10599215	32	1	356	10 51 907 9	STEUERSTAND LI
ADERENDHUELSE	602307708	100	2	34	10 56 645 8	KLEMMKASTEN
AGGREGAT DIESELMOTOR	11265606	6	1	2	01 38 281 14	LR 1300 SX
AGGREGAT HYDR	11247735	2	1	73	11 24 048 0	ZENTRALAGGREGAT
AGGREGATETRAEGER ANBA	10147686	12	1	171	10 14 032 7	DIESELMOTOR
AGGREGATETRAEGER VORM	10148254	1	1	175	10 14 768 6	AGGREGATETRAEGER ANBA
AL BEGEHUNG	11283908	14	1	482	11 24 570 3	AL ZWISCHENSTUECK KPL
AL BEGEHUNG	11285838	14	1	498	11 24 570 9	AL ZWISCHENSTUECK KPL
AL BEGEHUNG	11286261	14	1	504	11 24 571 5	AL ZWISCHENSTUECK KPL
AL BEGEHUNG	11289787	14	1	552	11 24 084 8	AL ZWISCHENSTUECK KPL
AL BEGEHUNG	11289792	14	1	559	11 24 162 5	AL ZWISCHENSTUECK KPL
AL BEGEHUNG	11289792	14	1	562	11 24 163 0	AL ZWISCHENSTUECK KPL
AL EL	992497814	17	1	627	11 21 529 8	WARNLICHT EL NRS
AL KOPF EL	10531413	3	1	509	11 24 132 4	AL KOPF KPL
AL KOPF KPL	11241324	81	1	2	01 38 281 14	LR 1300 SX
AL ZWISCHENSTUECK KPL	11240848	10	1	551	11 24 084 9	ZWISCHENSTUECK MONTAGE
AL ZWISCHENSTUECK KPL	11241625	10	1	558	11 24 162 7	ZWISCHENSTUECK MONTAGE
AL ZWISCHENSTUECK KPL	11241630	10	1	561	11 24 163 1	ZWISCHENSTUECK MONTAGE
AL ZWISCHENSTUECK KPL	11245703	10	1	481	11 24 570 5	ZWISCHENSTUECK MONTAGE
AL ZWISCHENSTUECK KPL	11245709	10	1	497	11 24 571 1	ZWISCHENSTUECK MONTAGE
AL ZWISCHENSTUECK KPL	11245715	10	1	503	11 24 571 7	ZWISCHENSTUECK MONTAGE

Bezeichnung	Artikel	Pos.	Menge	Blatt	Baugruppe	Bezeichnung
ANBAUFLANSCH	11250972	30	1	78	11 24 682 0	VERTEILERGETRIEBE
ANBAUFLANSCH	11250974	70	3	78	11 24 682 0	VERTEILERGETRIEBE
ANBAUFLANSCH	11290845	80	1	78	11 24 682 0	VERTEILERGETRIEBE
ANBAUFLANSCH	790403714	40	1	78	11 24 682 0	VERTEILERGETRIEBE
ANBAUGEHAEUSE	605613701	41	1	34	10 56 645 8	KLEMMKASTEN
ANBAUGEHAEUSE	693149814	45	1	34	10 56 645 8	KLEMMKASTEN
ANBAUSATZ DURCHTRIEB	10132357	302	1	116	10 12 878 7	V.PUMPE
ANBAUSATZ DURCHTRIEB	10138068	305	1	116	10 12 878 7	V.PUMPE
ANHAENGEKETTE	990835714	40	1	408	10 55 876 0	RAUPENTRAEGER RE KPL
ANHAENGEKETTE	990835714	40	1	417	10 55 876 1	RAUPENTRAEGER LI KPL
ANLAGE HARNSTOFF EINBAU	11241145	60	1	73	11 24 048 0	ZENTRALAGGREGAT
ANLENKBOLZEN EINBAU	992345114	50	1	6	11 24 047 9	OW KPL
ANLENKSTUECK EL	10530446	3	1	448	11 23 820 3	ANLENKSTUECK KPL
ANLENKSTUECK EL	10531409	3	1	525	11 24 336 5	ANLENKSTUECK NADEL KPL
ANLENKSTUECK HYDR	10518261	2	1	448	11 23 820 3	ANLENKSTUECK KPL
ANLENKSTUECK KPL	11238203	59	1	2	01 38 281 14	LR 1300 SX
ANLENKSTUECK NADEL KPL	11243365	10	1	523	11 24 618 2	NADELANBAUTEILE
ANSAUGANLAGE LUFT	11241142	30	1	73	11 24 048 0	ZENTRALAGGREGAT
ANSAUGROHR	953466003	10	1	168	10 58 017 0	RUECKLAUFROHR
ANSAUGROHR KPL	10350932	9	1	167	10 57 532 2	ANSAUGROHR OEL KPL
ANSAUGROHR KPL	10579155	11	2	167	10 57 532 2	ANSAUGROHR OEL KPL
ANSAUGROHR KPL	10598537	8	1	167	10 57 532 2	ANSAUGROHR OEL KPL
ANSAUGROHR KPL	592070414	7	1	167	10 57 532 2	ANSAUGROHR OEL KPL
ANSAUGROHR KPL	592330814	14	1	167	10 57 532 2	ANSAUGROHR OEL KPL
ANSAUGROHR KPL	916526414	13	1	167	10 57 532 2	ANSAUGROHR OEL KPL
ANSAUGROHR LUFT	11247162	11	1	264	11 24 114 2	ANSAUGANLAGE LUFT
ANSAUGROHR LUFT	11252578	15	1	280	11 24 114 6	ABDECKUNG
ANSAUGROHR OEL	10519481	15	1	73	11 24 048 0	ZENTRALAGGREGAT
ANSAUGROHR OEL KPL	10575322	3	1	165	10 51 948 1	ANSAUGROHR OEL
ANSAUGROHR OEL SCHWK	10575323	3	1	167	10 57 532 2	ANSAUGROHR OEL KPL
ANSAUGSTUTZEN	10141453	1	1	221	10 14 736 9	ANSAUGSTUTZEN ANBAU
ANSAUGSTUTZEN ANBAU	10147369	221	1	172	10 14 032 7	DIESELMOTOR
ANSCHLAG	10539631	45	2	408	10 55 876 0	RAUPENTRAEGER RE KPL
ANSCHLAG	10539631	45	2	417	10 55 876 1	RAUPENTRAEGER LI KPL
ANSCHLAG	990443514	8	2	290	10 57 883 5	TUER
ANSCHLAG	990443514	8	2	292	10 57 897 6	TUER
ANSCHLAG	990443514	3	2	294	10 57 940 0	TUER
ANSCHLAG	990443514	3	2	295	10 56 623 7	TUER
ANSCHLAG	990443514	8	2	296	10 56 580 8	TUER
ANSCHLAG SCHWK	919916514	8	2	533	11 29 426 7	MONTAGETEILE
ANSCHLAGPLATTE	958908914	17	1	459	10 58 193 7	GITTERROST KPL
ANSCHLAGPUFFER	592291314	108	1	367	10 35 250 8	KABINE
ANSCHLAGSCHRAUBE	11267448	2	1	90	11 06 730 5	WECHSELVENTIL
ANSCHLAGSCHRAUBE M12X3	9885661	17	2	97	10 11 835 0	ANSCHLUSSGEHAEUSE
ANSCHLUSSFLANSCH	10132074	3	1	204	10 13 382 3	ABSAUGPUMPE VORM.
ANSCHLUSSFLANSCH	9268423	13	1	95	10 11 834 9	DOPPELV.PUMPE
ANSCHLUSSFLANSCH	9276385	11	1	95	10 11 834 9	DOPPELV.PUMPE
ANSCHLUSSGEHAEUSE	10118350	3	1	95	10 11 834 9	DOPPELV.PUMPE
ANSCHLUSSPLATTE	510427914	5	1	465	10 51 959 1	VERROHRUNG HYDR
ANSCHLUSSPLATTE	510662614	12	2	8	11 29 618 6	OW HYDR
ANSCHLUSSPLATTE	510662914	23	3	8	11 29 618 6	OW HYDR
ANSCHLUSSPLATTE	510662914	5	1	312	10 51 969 8	NADELEINZIEHWINDE HYDR
ANSCHLUSSPLATTE	510662914	5	1	321	10 51 968 7	HAUPT EZW HYDR
ANSCHLUSSPLATTE	511455014	3	1	608	10 51 726 2	VERROHRUNG HYDR
ANSCHLUSSPLATTE VORM.	10141316	1	1	128	10 14 131 7	RS ANSCHLUSSPLATTE
ANSCHLUSSSTUECK	10139391	6	1	179	10 14 201 8	KURBELGEHAEUSEENTLUEF
ANSCHLUSSSTUECK	10139393	5	1	179	10 14 201 8	KURBELGEHAEUSEENTLUEF
ANSCHLUSSSTUECK	11297647	12	1	704	11 28 423 6	ZENTRALSCHMIERUNG NRS
ANSCHLUSSSTUECK VORM.	10141790	217	1	172	10 14 032 7	DIESELMOTOR
ANSCHLUSSSTUTZEN	10128100	4	1	210	10 13 508 0	DRUCKROHRSTUTZEN

Bezeichnung	Artikel	Pos.	Menge	Blatt	Baugruppe	Bezeichnung
ANSCHLUSSTEILE	11280481	10	1	704	11 28 423 6	ZENTRALSCHMIERUNG NRS
ANSCHLUSSTEILE	11280482	10	2	52	11 27 315 5	ZENTRALSCHMIERUNG
ANSCHWEISSPLATTE	11275578	21	2	470	11 27 536 5	RUECKFALLSTUETZEN EINBA
ANSCHWEISSPLATTE	949741314	31	1	533	11 29 426 7	MONTAGETEILE
ANSCHWEISSPLATTE	949742714	32	4	533	11 29 426 7	MONTAGETEILE
ANSCHWEISSPLATTE	949752914	18	2	541	11 29 938 4	MONTAGETEILE
ANSCHWEISSPLATTE	969329314	40	1	8	11 29 618 6	OW HYDR
ANSTEUERGERAET	11219934	1	1	93	11 21 991 7	STEUERGERAET
ANSTRICH SONDER	11892033	55	1	2	01 38 281 14	LR 1300 SX
ANTENNE	11645490	76	1	351	11 27 973 6	KABINE EL
ANTRIEB	11893214	4	1	425	10 53 039 8	WINDE
ANTRIEB	990464514	10	1	337	99 04 941 14	ANTRIEBSEINHEIT
ANTRIEB KPL	540270514	24	1	612	59 20 694 14	WINDE
ANTRIEBSEINHEIT	990494114	2	1	318	10 51 969 1	EZW OW EINBAU KPL
ANTRIEBSFLANSCH	606279014	20	1	424	11 22 050 0	WINDEN EINBAU
ANTRIEBSFLANSCH	606279014	20	1	439	11 22 050 1	WINDEN EINBAU
ANTRIEBSFLANSCH	606281114	46	1	28	11 24 519 0	OW EL
ANTRIEBSHUELSE	11223233	4	1	339	99 04 645 14	ANTRIEB
ANTRIEBSHUELSE	540272914	4	1	617	54 02 705 14	ANTRIEB KPL
ANTRIEBSWELLE	944434903	50	1	412	96 93 178 01	FAHRANTRIEB
ARBEITSSCHEINWERFER	10224500	100	4	29	11 24 519 0	OW EL
ARBEITSSCHEINWERFER	7027205	60	2	29	11 24 519 0	OW EL
ARBEITSSCHEINWERFER	7027205	50	3	351	11 27 973 6	KABINE EL
ARBEITSSCHEINWERFER	7027205	32	1	681	10 50 775 0	KAMERAUEBERWACHUNG
ARBEITSSCHEINWERFER	7027205	37	1	683	10 53 246 1	KAMERAUEBERWACHUNG
ARMLEHNE LINKS	10036948	90	1	692	10 04 363 3	FAHRERSITZ LUFTGEFEDERT
ARMLEHNE LINKS	7024982	90	1	380	10 22 506 8	FAHRERSITZ
ARMLEHNE RE	10036949	91	1	692	10 04 363 3	FAHRERSITZ LUFTGEFEDERT
ARMLEHNE RE	7024983	91	1	380	10 22 506 8	FAHRERSITZ
ARRETIERUNG	10227128	7	1	457	61 61 541 14	KABELTROMMEL
ARRETIERUNG	919617914	1	2	513	11 28 610 5	ARRETIERUNG KPL
ARRETIERUNG KPL	11286105	12	1	509	11 24 132 4	AL KOPF KPL
ATL-ANBAU	10140136	430	1	172	10 14 032 7	DIESELMOTOR
AUFFANGWANNE KPL	11283977	15	1	482	11 24 570 3	AL ZWISCHENSTUECK KPL
AUFFANGWANNE KPL	11283977	15	1	498	11 24 570 9	AL ZWISCHENSTUECK KPL
AUFFANGWANNE KPL	11283977	15	1	504	11 24 571 5	AL ZWISCHENSTUECK KPL
AUFFANGWANNE KPL	11283978	16	1	482	11 24 570 3	AL ZWISCHENSTUECK KPL
AUFFANGWANNE KPL	11283978	16	1	498	11 24 570 9	AL ZWISCHENSTUECK KPL
AUFFANGWANNE KPL	11283978	16	1	504	11 24 571 5	AL ZWISCHENSTUECK KPL
AUFFANGWANNE KPL	11283995	17	1	482	11 24 570 3	AL ZWISCHENSTUECK KPL
AUFFANGWANNE KPL	11283995	17	1	498	11 24 570 9	AL ZWISCHENSTUECK KPL
AUFFANGWANNE KPL	11283995	17	1	504	11 24 571 5	AL ZWISCHENSTUECK KPL
AUFFANGWANNE KPL	11283997	18	1	482	11 24 570 3	AL ZWISCHENSTUECK KPL
AUFFANGWANNE KPL	11283997	18	1	498	11 24 570 9	AL ZWISCHENSTUECK KPL
AUFFANGWANNE KPL	11283997	18	1	504	11 24 571 5	AL ZWISCHENSTUECK KPL
AUFHAENGUNG	11271488	22	1	593	79 04 871 14	UNTERFLASCHE
AUFHAENGUNG	11274638	21	1	586	79 04 112 14	UNTERFLASCHE
AUFKLEBER	10541838	32	1	598	10 51 118 5	MODEM NRS
AUFKLEBER	11295194	100	2	604	11 29 444 5	HEIZUNG NRS
AUFKLEBER SCHALLEISTUN	9874345	12	1	6	11 24 047 9	OW KPL
AUFLAGE	11219265	10	2	477	11 23 749 8	AUFLAGE KPL
AUFLAGE	11219265	10	2	494	11 23 290 7	AUFLAGE KPL
AUFLAGE	11219265	11	2	495	11 23 292 2	AUFLAGE KPL
AUFLAGE	11219265	10	2	579	11 25 204 2	AUFLAGE KPL
AUFLAGE	11260806	44	2	577	99 48 521 14	SPITZEN AL KPL
AUFLAGE	289035314	10	1	479	99 29 588 14	AUFLAGE
AUFLAGE	992958814	10	4	478	11 28 594 7	AUFLAGE KPL
AUFLAGE	992958814	10	6	496	11 28 619 1	AUFLAGE KPL
AUFLAGE	992958814	10	6	502	11 28 653 4	AUFLAGE KPL
AUFLAGE KPL	11232907	14	8	481	11 24 570 5	ZWISCHENSTUECK MONTAGE

Bezeichnung	Artikel	Pos.	Menge	Blatt	Baugruppe	Bezeichnung
AUFLAGE KPL	11232907	14	8	497	11 24 571 1	ZWISCHENSTUECK MONTAGE
AUFLAGE KPL	11232907	14	16	503	11 24 571 7	ZWISCHENSTUECK MONTAGE
AUFLAGE KPL	11232907	15	2	509	11 24 132 4	AL KOPF KPL
AUFLAGE KPL	11232907	59	2	525	11 24 336 5	ANLENKSTUECK NADEL KPL
AUFLAGE KPL	11232907	13	4	551	11 24 084 9	ZWISCHENSTUECK MONTAGE
AUFLAGE KPL	11232907	13	4	558	11 24 162 7	ZWISCHENSTUECK MONTAGE
AUFLAGE KPL	11232907	13	8	561	11 24 163 1	ZWISCHENSTUECK MONTAGE
AUFLAGE KPL	11232907	14	6	564	11 24 263 6	NADELKOPF KPL
AUFLAGE KPL	11232922	15	4	481	11 24 570 5	ZWISCHENSTUECK MONTAGE
AUFLAGE KPL	11232922	15	4	497	11 24 571 1	ZWISCHENSTUECK MONTAGE
AUFLAGE KPL	11232922	15	4	503	11 24 571 7	ZWISCHENSTUECK MONTAGE
AUFLAGE KPL	11232922	16	4	509	11 24 132 4	AL KOPF KPL
AUFLAGE KPL	11232922	14	2	551	11 24 084 9	ZWISCHENSTUECK MONTAGE
AUFLAGE KPL	11232922	14	2	558	11 24 162 7	ZWISCHENSTUECK MONTAGE
AUFLAGE KPL	11232922	14	2	561	11 24 163 1	ZWISCHENSTUECK MONTAGE
AUFLAGE KPL	11232922	15	2	564	11 24 263 6	NADELKOPF KPL
AUFLAGE KPL	11237498	13	4	471	11 23 937 8	A-BOCK 1 MONTAGEEINHEIT
AUFLAGE KPL	11237498	13	6	531	11 24 475 9	A-BOCK 2 KPL
AUFLAGE KPL	11252042	51	2	577	99 48 521 14	SPITZEN AL KPL
AUFLAGE KPL	11285947	65	1	2	01 38 281 14	LR 1300 SX
AUFLAGE KPL	11286191	69	1	2	01 38 281 14	LR 1300 SX
AUFLAGE KPL	11286534	77	4	2	01 38 281 14	LR 1300 SX
AUFLAGE KPL	991606114	63	1	6	11 24 047 9	OW KPL
AUFLAGE KPL	991873614	43	4	473	11 24 444 4	A-BOCK 1 KPL
AUFLAGEBLECH	10349598	81	2	451	11 23 820 3	ANLENKSTUECK KPL
AUFLAGEBLECH	10349598	10	1	488	11 28 397 8	AUFFANGWANNE KPL
AUFLAGEBLECH	10349598	10	1	490	11 28 399 7	AUFFANGWANNE KPL
AUFLAGEBLECH	10349599	82	2	451	11 23 820 3	ANLENKSTUECK KPL
AUFLAGEBLECH	10349599	10	1	487	11 28 397 7	AUFFANGWANNE KPL
AUFLAGEBLECH	10349599	10	1	489	11 28 399 5	AUFFANGWANNE KPL
AUFLAGEPLATTE	10098143	1	2	70	99 16 061 14	AUFLAGE KPL
AUFNAHMEGEHAEUSE	605127914	1000	2	697	10 56 427 9	KABELSTRANG
AUFSTIEG KPL	10501795	32	6	408	10 55 876 0	RAUPENTRAEGER RE KPL
AUFSTIEG KPL	10501795	32	6	417	10 55 876 1	RAUPENTRAEGER LI KPL
AUSGANGSMODUL	10143994	2	1	269	10 14 404 9	SCR KPL.
AUSGLEICHSBEHAELTER	11287347	11	1	254	11 24 114 0	KUEHLER EINBAU WASSER
AUSGLEICHSBEHAELTER	502800014	7	1	547	10 53 146 1	VERROHRUNG HYDR
AUSLASSVENTIL	10136751	4	2	192	10 13 728 6	ZYLINDERKOPF VORM.
AUSPUFFKLAPPE	11299163	13	1	268	11 24 114 3	ABGASANLAGE
AUSSENLAMELLE	501540414	97	8	339	99 04 645 14	ANTRIEB
AUSSENSPIEGEL	779002114	43	1	350	11 29 327 3	KABINE KPL
AXIALSCHEIBE	540270814	15	6	613	54 02 701 14	PLANETENSTUFE
BACK-UP-ALARM	10288438	52	1	29	11 24 519 0	OW EL
BACKRING	10352355	110	1	669	59 21 826 14	ABSTUETZZYL
BACKRING	10352359	130	4	669	59 21 826 14	ABSTUETZZYL
BACKRING	513325614	22	1	548	59 21 280 14	EINFACHWIRKZYL
BACKRING	790400714	23	1	548	59 21 280 14	EINFACHWIRKZYL
BALLASTGEWICHT ANORD	992338614	18	1	2	01 38 281 14	LR 1300 SX
BALLASTIERGEHAENGE	797027814	23	1	650	11 23 619 7	SELBSTVERLADESYSTEM NR
BATTERIE	10664204	31	2	28	11 24 519 0	OW EL
BATTERIE EINBAU KPL	10560673	45	1	6	11 24 047 9	OW KPL
BATTERIEABDECKUNG	10560674	1	1	60	10 56 067 3	BATTERIE EINBAU KPL
BATTERIEHAUPTSCHALTER	606070908	35	1	28	11 24 519 0	OW EL
BATTERIEKLEMME	10224316	33	1	28	11 24 519 0	OW EL
BATTERIEKLEMME	10224316	3	1	31	10 53 048 9	SICHERUNGSHALTER
BATTERIEKLEMME	10547876	32	2	28	11 24 519 0	OW EL
BECKENGURT	7371746	80	1	380	10 22 506 8	FAHRERSITZ
BECKENGURT	7371746	80	1	692	10 04 363 3	FAHRERSITZ LUFTGEFEDERT
BEDIENELEMENT	592291914	123	1	367	10 35 250 8	KABINE
BEDIENFELD	612436814	11	1	358	10 03 610 7	TASTATUR BEDIENPULT X11

Bezeichnung	Artikel	Pos.	Menge	Blatt	Baugruppe	Bezeichnung
BEF BAND	501507214	14	1	614	54 02 702 14	SEILTROMMEL KPL
BEF BUEGEL	11219861	10	1	495	11 23 292 2	AUFLAGE KPL
BEF SCHELLE	10350978	32	1	75	11 24 773 5	AGGREGAT HYDR
BEF SCHRAUBE	602134114	59	4	34	10 56 645 8	KLEMMKASTEN
BEF SOCKEL	11230237	44	9	473	11 24 444 4	A-BOCK 1 KPL
BEF-TEILE OW	11244837	14	1	71	11 26 560 6	AGGREGAT DIESELMOTOR
BEFESTIGUNG DRUCKROHR	10135434	193	6	172	10 14 032 7	DIESELMOTOR
BEFESTIGUNG INJEKTOR	10135432	192	6	171	10 14 032 7	DIESELMOTOR
BEFESTIGUNGSBLECH	10149477	2	1	239	10 14 584 5	GENERATOR VORM.
BEFESTIGUNGSBUEGEL	10578343	33	1	58	10 58 163 4	KABINENAUFHAENGUNG KPL
BEFESTIGUNGSCHELLE	11283913	18	8	485	11 28 390 8	AL BEGEHUNG
BEFESTIGUNGSCHELLE	11283913	18	9	499	11 28 583 8	AL BEGEHUNG
BEFESTIGUNGSCHELLE	11283913	18	9	505	11 28 626 1	AL BEGEHUNG
BEFESTIGUNGSCHELLE	11283913	17	12	509	11 24 132 4	AL KOPF KPL
BEFESTIGUNGSCHELLE	11283913	52	8	525	11 24 336 5	ANLENKSTUECK NADEL KPL
BEFESTIGUNGSCHELLE	11286679	11	7	553	11 28 978 7	AL BEGEHUNG
BEFESTIGUNGSCHELLE	11286679	11	6	560	11 28 979 2	AL BEGEHUNG
BEFESTIGUNGSTEILE	10289973	41	1	380	10 22 506 8	FAHRERSITZ
BEFESTIGUNGSTEILE	10289973	41	1	692	10 04 363 3	FAHRERSITZ LUFTGEFEDERT
BEFESTIGUNGSTEILE	10289974	43	1	692	10 04 363 3	FAHRERSITZ LUFTGEFEDERT
BEHAELTER	592286714	9	2	366	10 35 250 8	KABINE
BELUEFTUNGSFILTER	11280868	12	1	48	10 56 073 3	KRAFTSTOFFTANK KPL
BELUEFTUNGSFILTER	510690614	13	1	44	10 56 070 1	TANK HYDR KPL
BEREICHSBEGRENZUNG KPL	10529523	829	1	4	01 38 281 14	LR 1300 SX
BERUEHRUNGSSCHUTZ	10351108	59	2	354	10 55 963 5	SCHALTSCHR X1
BESEILUNG EZW HAUPT AL	11227037	26	1	2	01 38 281 14	LR 1300 SX
BESEILUNG EZW NADEL AL	992338714	24	1	2	01 38 281 14	LR 1300 SX
BETAETIGUNG	7028257	30	1	693	70 28 516	SITZRAHMEN
BETANKUNGSANLAGE NRS	10521554	858	1	4	01 38 281 14	LR 1300 SX
BETANKUNGSPUMPE	510095914	10	1	712	10 52 957 6	BETANKUNGSPUMPE KPL
BETANKUNGSPUMPE KPL	10529576	10	1	710	10 52 155 4	BETANKUNGSANLAGE NRS
BETRIEBSSTUNDENZAEHLER	10599206	31	1	356	10 51 907 9	STEUERSTAND LI
BEZEICHNUNGSKARTE	602835914	52	1	34	10 56 645 8	KLEMMKASTEN
BILDSCHIRMGEHAEUSE	11262812	2	1	383	11 26 095 6	STEUERKONSOLE RE KPL
BLASENSPEICHER	510641214	16	1	75	11 24 773 5	AGGREGAT HYDR
BLECH	10142763	2	1	233	10 14 274 4	KUEHLWASSERENTLUEFTUN
BLECH	10529071	11	1	686	10 58 064 7	VIDEOUEBERWACHUNGSANL
BLECH	10529074	12	1	686	10 58 064 7	VIDEOUEBERWACHUNGSANL
BLECH	10574357	19	2	288	11 24 409 1	VERKLEIDUNG
BLECH	10581590	21	1	288	11 24 409 1	VERKLEIDUNG
BLECH	11217232	18	4	282	11 24 409 0	VERKLEIDUNG OW EINBAU KP
BLECH	11271486	16	4	593	79 04 871 14	UNTERFLASCHE
BLECH	11271972	12	2	554	11 28 979 0	GITTERROSTTRAEGER
BLECH	11271973	11	1	554	11 28 979 0	GITTERROSTTRAEGER
BLECH	11274636	16	4	586	79 04 112 14	UNTERFLASCHE
BLECH	11310952	12	2	485	11 28 390 8	AL BEGEHUNG
BLECH	11310952	12	2	499	11 28 583 8	AL BEGEHUNG
BLECH	11310952	12	2	505	11 28 626 1	AL BEGEHUNG
BLECH	11311241	10	1	485	11 28 390 8	AL BEGEHUNG
BLECH	11311241	10	1	499	11 28 583 8	AL BEGEHUNG
BLECH	11311241	10	1	505	11 28 626 1	AL BEGEHUNG
BLECH	11311262	11	1	485	11 28 390 8	AL BEGEHUNG
BLECH	11311336	11	1	499	11 28 583 8	AL BEGEHUNG
BLECH	11311393	11	1	505	11 28 626 1	AL BEGEHUNG
BLECH	950102914	16	1	522	99 30 800 14	SPITZENENDSCHALTER EINBA
BLECH	950143914	37	2	521	99 23 398 14	ROLLENSATZ
BLECH	950161014	6	2	533	11 29 426 7	MONTAGETEILE
BLECH	950285614	11	1	527	11 29 648 5	BOLZEN KPL
BLECH	950287214	7	1	533	11 29 426 7	MONTAGETEILE
BLECH	950562214	10	2	537	99 35 031 14	SEILSCHUTZ KPL

Bezeichnung	Artikel	Pos.	Menge	Blatt	Baugruppe	Bezeichnung
BLECH	954432003	17	10	424	11 22 050 0	WINDEN EINBAU
BLECH	954432003	17	10	439	11 22 050 1	WINDEN EINBAU
BLECH	954486503	18	6	424	11 22 050 0	WINDEN EINBAU
BLECH	954486503	18	6	439	11 22 050 1	WINDEN EINBAU
BLECH	971363403	93	1	451	11 23 820 3	ANLENKSTUECK KPL
BLENDE	10143665	2	1	116	10 12 878 7	V.PUMPE
BLENDE	10226479	5	1	370	10 50 133 3	SCHIEBETUER
BLENDE	11248964	21	1	282	11 24 409 0	VERKLEIDUNG OW EINBAU KP
BLENDE	11248966	22	1	282	11 24 409 0	VERKLEIDUNG OW EINBAU KP
BLENDE	11248990	19	2	282	11 24 409 0	VERKLEIDUNG OW EINBAU KP
BLENDE	11248991	15	2	282	11 24 409 0	VERKLEIDUNG OW EINBAU KP
BLENDE	11248992	20	2	282	11 24 409 0	VERKLEIDUNG OW EINBAU KP
BLENDENSCHRAUBE	11219933	8	1	84	11 21 991 0	PUMPENGEHAEUSE
BLINDSTOPFEN	602458214	15	8	359	10 53 171 8	TASTATUR
BLINDSTOPFEN	606907114	37	1	714	10 52 155 9	MODUL BETANKUNGSANLAG
BLINDSTOPFEN	693061214	26	4	566	10 57 624 5	KABELSATZ
BLINDSTOPFEN	693061314	29	1	34	10 56 645 8	KLEMMKASTEN
BLINDSTOPFEN	693061314	25	4	566	10 57 624 5	KABELSATZ
BLINDSTOPFEN	693061414	24	1	566	10 57 624 5	KABELSATZ
BLINDSTOPFEN	693061414	52	1	566	10 57 624 5	KABELSATZ
BLINDSTOPFEN	693061514	52	2	578	97 14 959 03	SPITZENENDSCHALTER EL
BLINDSTOPFEN	693061514	52	2	583	91 95 871 14	SPITZENENDSCHALTER EL
BLINDSTOPFEN	693061514	52	2	634	10 51 167 1	ENDSCHALTER EL
BLITZLEUCHTE	10524928	90	1	352	11 27 973 6	KABINE EL
BLITZLEUCHTE	10524928	35	2	474	10 53 120 7	A-BOCK EL
BLOCK	11226015	10	1	346	51 14 347 14	DW SICHERUNGSBLOCK
BLOCK	943958914	30	1	8	11 29 618 6	OW HYDR
BLOCK	943958914	5	1	453	10 51 826 1	ANLENKSTUECK HYDR
BLOCK	943958914	5	1	547	10 53 146 1	VERROHRUNG HYDR
BODEN	11289833	25	1	669	59 21 826 14	ABSTUETZZYL
BODENMATTE	592286914	25	1	366	10 35 250 8	KABINE
BODENPLATTE	388291208	16	72	408	10 55 876 0	RAUPENTRAEGER RE KPL
BODENPLATTE	388291208	16	72	417	10 55 876 1	RAUPENTRAEGER LI KPL
BOLZEN	10529084	15	1	686	10 58 064 7	VIDEOUEBERWACHUNGSANL
BOLZEN	10529086	16	1	686	10 58 064 7	VIDEOUEBERWACHUNGSANL
BOLZEN	10572058	25	4	665	11 89 568 6	SELBSTVERLADESYSTEM NR
BOLZEN	10574630	1	1	433	10 57 462 9	BOLZEN KPL
BOLZEN	11215962	4	1	570	11 28 774 6	MONTAGETEILE
BOLZEN	11240009	98	3	451	11 23 820 3	ANLENKSTUECK KPL
BOLZEN	11250329	30	4	164	11 24 113 8	MOTORLAGER KPL
BOLZEN	11271461	4	1	593	79 04 871 14	UNTERFLASCHE
BOLZEN	11301479	42	1	58	10 58 163 4	KABINENAUFHAENGUNG KPL
BOLZEN	11493575	4	1	586	79 04 112 14	UNTERFLASCHE
BOLZEN	592291514	1	1	376	59 22 914 14	PODESTSICHERUNG KPL
BOLZEN	9477439	13	2	97	10 11 835 0	ANSCHLUSSGEHAEUSE
BOLZEN	950290614	10	1	529	11 29 649 2	BOLZEN KPL
BOLZEN	950387314	59	10	621	10 55 372 1	DACHGELAENDER NRS
BOLZEN	950735914	18	1	582	99 38 329 14	SPITZEN AL KPL
BOLZEN	956067614	3	1	577	99 48 521 14	SPITZEN AL KPL
BOLZEN	956070214	9	1	577	99 48 521 14	SPITZEN AL KPL
BOLZEN	956374714	31	2	582	99 38 329 14	SPITZEN AL KPL
BOLZEN	956536214	37	2	633	10 51 176 9	ZWISCHENHUB NADEL AL KP
BOLZEN	956711314	23	8	644	10 51 971 3	SELBSTVERLADESYSTEM NR
BOLZEN	956802414	13	1	521	99 23 398 14	ROLLENSATZ
BOLZEN	956802514	14	1	521	99 23 398 14	ROLLENSATZ
BOLZEN	956859714	4	4	639	99 23 405 14	ZWISCHENABSPANNUNG NR
BOLZEN	957104814	39	1	633	10 51 176 9	ZWISCHENHUB NADEL AL KP
BOLZEN	957563914	15	2	544	10 53 145 5	RUECKFALLSTUETZE NADEL
BOLZEN	959483514	3	1	570	11 28 774 6	MONTAGETEILE
BOLZEN	959643514	11	4	512	11 28 629 9	MONTAGETEILE

Bezeichnung	Artikel	Pos.	Menge	Blatt	Baugruppe	Bezeichnung
BOLZEN	959866614	7	1	329	99 29 258 14	EZW ROLLENPAKET
BOLZEN	959912614	16	6	309	99 29 803 14	VERZURRUNG BALLAST
BOLZEN	966429214	28	1	582	99 38 329 14	SPITZEN AL KPL
BOLZEN	968523914	27	1	58	10 58 163 4	KABINENAUFHAENGUNG KPL
BOLZEN	970883003	27	2	302	11 24 483 7	BEF-TEILE OW
BOLZEN 100X1606 LHRD900-40	11239740	22	1	473	11 24 444 4	A-BOCK 1 KPL
BOLZEN 110X198 LHRD900-40	959912214	13	6	309	99 29 803 14	VERZURRUNG BALLAST
BOLZEN 115X200 LHRD900-40	949389914	12	2	473	11 24 444 4	A-BOCK 1 KPL
BOLZEN 120X270 35NICRMOV	959712214	1	2	63	99 23 451 14	ANLENKBOLZEN EINBAU
BOLZEN 150X330	11230438	4	1	403	51 33 141 14	DOPPELWIRKZYL
BOLZEN 30X46 LHRD750-30;1	945877814	37	2	637	99 10 116 14	SEILFUEHRUNG
BOLZEN 30X46 LHRD750-30;1	945877814	3	1	640	99 10 125 14	GABEL
BOLZEN 30X46 LHRD750-30;1	945877814	3	1	642	99 06 789 14	GABEL
BOLZEN 35X 120 LHRD750-30;1	953305103	27	1	637	99 10 116 14	SEILFUEHRUNG
BOLZEN 40X143 34CRNIMO6;E	956929614	14	2	544	10 53 145 5	RUECKFALLSTUETZE NADEL
BOLZEN 40X182 LHRD900-40;1	10351894	11	4	311	10 51 969 7	NADELEINZIEHWINDE
BOLZEN 48X58 LHRD900-40;1	485568414	38	2	637	99 10 116 14	SEILFUEHRUNG
BOLZEN 50X138 LHRD900-40;1	10534039	13	4	64	10 51 969 4	A-BOCK AUFRICHTZYL EINBA
BOLZEN 50X157 LHRD900-40;1	956847814	2	2	513	11 28 610 5	ARRETIERUNG KPL
BOLZEN 50X95 LHRD750-30;1	956047514	11	2	388	99 18 041 14	VERZURRUNG OW
BOLZEN 53X67 LHRD900-40;1	10550993	12	2	512	11 28 629 9	MONTAGETEILE
BOLZEN 53X82 LHRD900-40;1	949946714	13	2	512	11 28 629 9	MONTAGETEILE
BOLZEN 55X85X66 LHRD900-	945931614	20	4	535	99 26 359 14	HALTESTANGE KPL
BOLZEN 55X92 LHRD900-40;1	956215014	13	4	544	10 53 145 5	RUECKFALLSTUETZE NADEL
BOLZEN 58X113 LHRD900-40;1	949174814	26	2	577	99 48 521 14	SPITZEN AL KPL
BOLZEN 58X140 LHRD900-40;1	957261514	14	1	582	99 38 329 14	SPITZEN AL KPL
BOLZEN 58X140 LHRD900-40;1	957261514	41	1	633	10 51 176 9	ZWISCHENHUB NADEL AL KP
BOLZEN 58X95 LHRD900-40;1	948959414	31	4	577	99 48 521 14	SPITZEN AL KPL
BOLZEN 60X110 LHRD750-30;1	950663614	17	2	64	10 51 969 4	A-BOCK AUFRICHTZYL EINBA
BOLZEN 60X120 LHRD900-40;1	942804914	10	2	577	99 48 521 14	SPITZEN AL KPL
BOLZEN 63X110 LHRD900-40;1	949982414	23	2	535	99 26 359 14	HALTESTANGE KPL
BOLZEN 63X110 LHRD900-40;1	949982414	20	2	571	99 26 362 14	HALTESTANGE KPL
BOLZEN 63X120 LHRD900-40;1	949351814	5	4	641	99 23 420 14	ZWISCHENABSPANNUNG NR
BOLZEN 63X120 LHRD900-40;1	949351814	10	1	650	11 23 619 7	SELBSTVERLADESYSTEM NR
BOLZEN 63X95 LHRD900-40;1	949196614	3	4	493	91 85 910 14	HALTESTANGE KPL
BOLZEN 63X95 LHRD900-40;1	949196614	3	4	501	91 85 911 14	HALTESTANGE KPL
BOLZEN 63X95 LHRD900-40;1	949196614	3	8	507	99 03 609 14	HALTESTANGE KPL
BOLZEN 63X95 LHRD900-40;1	949196614	22	8	535	99 26 359 14	HALTESTANGE KPL
BOLZEN 63X95 LHRD900-40;1	949196614	15	4	542	10 59 968 1	HALTESTANGE KPL
BOLZEN 63X95 LHRD900-40;1	949196614	16	8	571	99 26 362 14	HALTESTANGE KPL
BOLZEN 65X193 LHRD900-40;1	957831614	10	4	308	10 52 656 0	MONTAGETEILE
BOLZEN 65X284 LHRD900-40;1	949886314	10	1	528	11 28 852 3	BOLZEN KPL
BOLZEN 65X284 LHRD900-40;1	949886314	33	4	633	10 51 176 9	ZWISCHENHUB NADEL AL KP
BOLZEN 68X105 LHRD750-30;1	948545514	39	2	637	99 10 116 14	SEILFUEHRUNG
BOLZEN 68X105 LHRD900-40;1	942976214	21	2	535	99 26 359 14	HALTESTANGE KPL
BOLZEN 68X105 LHRD900-40;1	942976214	21	2	571	99 26 362 14	HALTESTANGE KPL
BOLZEN 68X115 LHRD900-40;1	950365014	16	4	542	10 59 968 1	HALTESTANGE KPL
BOLZEN 73X95 LHRD900-40;1	959575714	12	4	460	99 30 060 14	HALTESTANGE KPL
BOLZEN 73X95 LHRD900-40;1	959575714	12	4	492	99 24 404 14	HALTESTANGE KPL
BOLZEN 73X95 LHRD900-40;1	959575714	12	4	500	99 24 405 14	HALTESTANGE KPL
BOLZEN 73X95 LHRD900-40;1	959575714	12	8	506	99 24 406 14	HALTESTANGE KPL
BOLZEN 73X95 LHRD900-40;1	959575714	12	4	519	99 24 594 14	HALTESTANGE KPL
BOLZEN 73X95 LHRD900-40;1	959575714	39	2	582	99 38 329 14	SPITZEN AL KPL
BOLZEN 75X125 LHRD900-40;1	957896414	17	4	542	10 59 968 1	HALTESTANGE KPL
BOLZEN 75X240 LHRD900-40;1	959912114	12	6	309	99 29 803 14	VERZURRUNG BALLAST
BOLZEN 80X371 LHRD900-40;1	950581614	11	4	450	11 23 820 3	ANLENKSTUECK KPL
BOLZEN 80X371 LHRD900-40;1	950581614	10	1	483	11 28 726 4	BOLZEN KPL
BOLZEN 83X131 LHRD900-40;1	959921514	12	8	476	99 26 417 14	HALTESTANGE KPL
BOLZEN 83X131 LHRD900-40;1	959921514	17	4	519	99 24 594 14	HALTESTANGE KPL
BOLZEN 90X1022.5 LHRD900-	10349222	33	1	541	11 29 938 4	MONTAGETEILE

Bezeichnung	Artikel	Pos.	Menge	Blatt	Baugruppe	Bezeichnung
BOLZEN 90X1079.5 LHRD900-	10349125	1	1	533	11 29 426 7	MONTAGETEILE
BOLZEN 90X205 LHRD900-40;1	10349207	10	1	527	11 29 648 5	BOLZEN KPL
BOLZEN DIN 1435-B 35H11X90	453050914	5	12	639	99 23 405 14	ZWISCHENABSPANNUNG NR
BOLZEN DIN 1435-B 35H11X90	453050914	4	12	641	99 23 420 14	ZWISCHENABSPANNUNG NR
BOLZEN DIN 1435-B 35H11X90	453050914	5	14	643	97 05 997 03	ZWISCHENABSPANNUNG NR
BOLZEN DIN EN 22340-B 25F7X	485501714	23	2	58	10 58 163 4	KABINENAUFHAENGUNG KPL
BOLZEN DIN EN 22340-B 25F8	450052114	30	2	58	10 58 163 4	KABINENAUFHAENGUNG KPL
BOLZEN DIN EN 22340-B 25F8	450052114	2	2	63	99 23 451 14	ANLENKBOLZEN EINBAU
BOLZEN DIN EN 22341-B 40H1	451436614	13	1	58	10 58 163 4	KABINENAUFHAENGUNG KPL
BOLZEN DIN EN 22341-B 50H11	485519214	19	1	650	11 23 619 7	SELBSTVERLADESYSTEM NR
BOLZEN DIN EN 22341-B 80H11	485518914	19	2	644	10 51 971 3	SELBSTVERLADESYSTEM NR
BOLZEN EN 10060 28X220X192	942594714	26	2	637	99 10 116 14	SEILFUEHRUNG
BOLZEN EN 10278 20X144 S3	958214314	2	1	516	11 28 357 6	MONTAGETEILE
BOLZEN KPL	10574629	11	4	424	11 22 050 0	WINDEN EINBAU
BOLZEN KPL	10574629	11	4	439	11 22 050 1	WINDEN EINBAU
BOLZEN KPL	11262110	13	4	671	11 89 568 8	SELBSTVERLADESYSTEM NR
BOLZEN KPL	11287264	11	4	482	11 24 570 3	AL ZWISCHENSTUECK KPL
BOLZEN KPL	11287264	11	4	498	11 24 570 9	AL ZWISCHENSTUECK KPL
BOLZEN KPL	11287264	11	4	504	11 24 571 5	AL ZWISCHENSTUECK KPL
BOLZEN KPL	11288523	13	4	525	11 24 336 5	ANLENKSTUECK NADEL KPL
BOLZEN KPL	11288523	11	4	552	11 24 084 8	AL ZWISCHENSTUECK KPL
BOLZEN KPL	11288523	11	4	559	11 24 162 5	AL ZWISCHENSTUECK KPL
BOLZEN KPL	11288523	11	4	562	11 24 163 0	AL ZWISCHENSTUECK KPL
BOLZEN KPL	11296485	12	2	525	11 24 336 5	ANLENKSTUECK NADEL KPL
BOLZEN KPL	11296492	14	2	525	11 24 336 5	ANLENKSTUECK NADEL KPL
BOLZEN KPL	959835714	14	4	671	11 89 568 8	SELBSTVERLADESYSTEM NR
BOLZEN KPL	992921714	29	2	408	10 55 876 0	RAUPENTRAEGER RE KPL
BOLZEN KPL	992921714	29	2	417	10 55 876 1	RAUPENTRAEGER LI KPL
BOLZEN M12X1.5 NIROSTA	10227129	9	1	457	61 61 541 14	KABELTROMMEL
BOLZEN RD20X394 LHRD750-	10501796	2	1	414	10 50 179 5	AUFSTIEG KPL
BOLZEN RD20X54 ST 37 K	956247414	36	1	633	10 51 176 9	ZWISCHENHUB NADEL AL KP
BOLZEN RD68X175 LHRD900-	959799614	27	8	644	10 51 971 3	SELBSTVERLADESYSTEM NR
BOLZEN SCHWK	992387314	1	1	570	11 28 774 6	MONTAGETEILE
BOLZEN X	9477429	18	1	104	10 13 975 2	RS SCHWENKJOCH
BOLZENVERBINDUNG	910353714	8	2	512	11 28 629 9	MONTAGETEILE
BOLZENVERBINDUNG	910362714	5	1	570	11 28 774 6	MONTAGETEILE
BOLZENVERBINDUNG	910362714	14	1	631	91 92 763 14	HAKENBETRIEB 2 NRS
BOWLE	10331395	14	1	273	10 30 300 7	KRAFTSTOFFVORFILTER
BOWLENDICHTUNG	10294170	9	1	273	10 30 300 7	KRAFTSTOFFVORFILTER
BRECHSTANGE 1200 MM	790036914	12	1	444	10 56 183 8	WERKZEUG
BRECHSTANGE 600 MM	885400114	14	1	444	10 56 183 8	WERKZEUG
BREMSFLANSCH	540272814	1	1	617	54 02 705 14	ANTRIEB KPL
BREMSVENTIL	10227399	60	1	313	51 22 527 14	OELMOTOR
BREMSVENTIL	512401414	60	1	322	51 22 942 14	OELMOTOR
BREMSVENTIL	512411914	10	1	399	11 22 473 8	VERSTELLUNG
BUCHSE	10097992	2	2	413	79 05 233 14	TRAGROLLE KPL
BUCHSE	10145395	6	1	239	10 14 584 5	GENERATOR VORM.
BUCHSE	10227126	8	1	457	61 61 541 14	KABELTROMMEL
BUCHSE	10546993	20	2	470	11 27 536 5	RUECKFALLSTUETZEN EINBA
BUCHSE	11239698	37	2	473	11 24 444 4	A-BOCK 1 KPL
BUCHSE	11890145	2	2	410	10 55 716 2	LEITRAD KPL
BUCHSE	9269136	11	9	107	90 75 894	ZYLINDER MIT BUCHSE
BUCHSE	956070614	6	2	577	99 48 521 14	SPITZEN AL KPL
BUCHSE	956648114	44	1	582	99 38 329 14	SPITZEN AL KPL
BUCHSE	959001414	10	1	329	99 29 258 14	EZW ROLLENPAKET
BUCHSE	959019014	11	3	47	10 56 073 2	KRAFTSTOFFTANK EINBAU
BUCHSE	959841114	39	4	473	11 24 444 4	A-BOCK 1 KPL
BUCHSE 100/130X33 S770QL;E	10336763	5	3	329	99 29 258 14	EZW ROLLENPAKET
BUCHSE 100/130X36 S770QL;E	959869314	3	3	329	99 29 258 14	EZW ROLLENPAKET
BUCHSE 100/80X40 E470;EN 10	954398803	15	2	512	11 28 629 9	MONTAGETEILE

Bezeichnung	Artikel	Pos.	Menge	Blatt	Baugruppe	Bezeichnung
BUCHSE 100/90X22 S355J2H;E	949721314	21	5	533	11 29 426 7	MONTAGETEILE
BUCHSE 100/90X22 S355J2H;E	949721314	28	2	541	11 29 938 4	MONTAGETEILE
BUCHSE 110/75.5X10 POM	10336924	16	8	476	99 26 417 14	HALTESTANGE KPL
BUCHSE 110/75.5X2.5 POM	10336928	18	4	476	99 26 417 14	HALTESTANGE KPL
BUCHSE 110/75.5X5 POM	10336926	17	8	476	99 26 417 14	HALTESTANGE KPL
BUCHSE 115/135X21 E470;EN	970859103	40	4	473	11 24 444 4	A-BOCK 1 KPL
BUCHSE 115/135X56 E470;EN	970588503	61	2	6	11 24 047 9	OW KPL
BUCHSE 120/150X88 E470;EN	954398703	60	2	6	11 24 047 9	OW KPL
BUCHSE 13/28X15 S355J2;EN	970726703	19	4	424	11 22 050 0	WINDEN EINBAU
BUCHSE 13/28X15 S355J2;EN	970726703	19	4	439	11 22 050 1	WINDEN EINBAU
BUCHSE 140/150X72 S355J2H	956627714	17	1	570	11 28 774 6	MONTAGETEILE
BUCHSE 140/160X100 GZ-CU	11233062	42	1	521	99 23 398 14	ROLLENSATZ
BUCHSE 140/160X55 LHR355-	956803414	16	2	521	99 23 398 14	ROLLENSATZ
BUCHSE 140/160X77 LHR355-	956070514	4	2	577	99 48 521 14	SPITZEN AL KPL
BUCHSE 140/168.3X40 LHR355-	956092714	25	2	577	99 48 521 14	SPITZEN AL KPL
BUCHSE 141/152.4X40 S355J		13	-2	631	91 92 763 14	HAKENBETRIEB 2 NRS
BUCHSE 150/140X27 KUNSTST	959476114	19	2	570	11 28 774 6	MONTAGETEILE
BUCHSE 25/40X56	790212314	39	2	58	10 58 163 4	KABINENAUFHAENGUNG KPL
BUCHSE 26.5/20X30 POM	797029114	7	1	290	10 57 883 5	TUER
BUCHSE 26.5/20X30 POM	797029114	7	1	292	10 57 897 6	TUER
BUCHSE 26.5/20X30 POM	797029114	5	1	294	10 57 940 0	TUER
BUCHSE 26.5/20X30 POM	797029114	5	1	295	10 56 623 7	TUER
BUCHSE 26.5/20X30 POM	797029114	7	1	296	10 56 580 8	TUER
BUCHSE 30/20X32 POM	958471514	17	1	290	10 57 883 5	TUER
BUCHSE 30/20X32 POM	958471514	17	1	292	10 57 897 6	TUER
BUCHSE 30/20X32 POM	958471514	6	1	294	10 57 940 0	TUER
BUCHSE 30/20X32 POM	958471514	6	1	295	10 56 623 7	TUER
BUCHSE 30/20X32 POM	958471514	14	1	296	10 56 580 8	TUER
BUCHSE 30/40X38 GZ-CUSN7Z	967216303	2	1	611	96 72 161 03	SEILROLLE KPL
BUCHSE 50/55X30	708014114	4	4	513	11 28 610 5	ARRETIERUNG KPL
BUCHSE 50/60X35 CUZN25AL5	10504737	19	1	67	59 21 041 14	DOPPELWIRKZYL
BUCHSE 50/60X42	11230849	18	2	473	11 24 444 4	A-BOCK 1 KPL
BUCHSE 51/70X13.5 POLYAMI	10534042	14	8	64	10 51 969 4	A-BOCK AUFRICHTZYL EINBA
BUCHSE 90.5/101.6X120 LHR35	949748414	23	2	533	11 29 426 7	MONTAGETEILE
BUCHSE 90.5/101.6X120 LHR35	949748414	23	1	541	11 29 938 4	MONTAGETEILE
BUCHSE 90.5/101.6X173 LHR35	949740814	22	1	533	11 29 426 7	MONTAGETEILE
BUCHSE 90.5/101.6X26 LHR35	949740614	11	10	637	99 10 116 14	SEILFUEHRUNG
BUCHSE 90.5/101.6X27 LHR35	957140114	25	2	541	11 29 938 4	MONTAGETEILE
BUCHSE 90.5/101.6X67 LHR35		11	-2	631	91 92 763 14	HAKENBETRIEB 2 NRS
BUCHSE 90.5/101.6X67 LHR35	949740914	24	1	533	11 29 426 7	MONTAGETEILE
BUCHSE 90.5/101.6X67 LHR35	949740914	22	1	541	11 29 938 4	MONTAGETEILE
BUCHSE 90/100X33 S355J2H;E	949741014	25	4	533	11 29 426 7	MONTAGETEILE
BUCHSE 90/110X36 S355J2H;E	949988214	19	2	521	99 23 398 14	ROLLENSATZ
BUCHSE 90/110X50 E470;EN 10	385037314	14	2	512	11 28 629 9	MONTAGETEILE
BUCHSE 90/130X29 PA 6 G	289007114	7	24	550	99 31 679 14	ABSTUETZUNG KPL
BUCHSE 91/101.6X145 LHR355-	956805414	18	2	521	99 23 398 14	ROLLENSATZ
BUCHSE 91/101.6X5 LHR355-20	956803714	25	2	521	99 23 398 14	ROLLENSATZ
BUCHSE 91/101.6X60 LHR355-	956805314	17	2	521	99 23 398 14	ROLLENSATZ
BUCHSE 96.2/110X80 PA 6 G	11245109	27	1	533	11 29 426 7	MONTAGETEILE
BUCHSE DIN 1850,ISO 4379 95/	10561944	28	2	533	11 29 426 7	MONTAGETEILE
BUCHSE EN 10060 RD44X26.5	10588730	12	3	42	10 56 070 0	TANK HYDR EINBAU
BUCHSE EN 10210-2 140.5/159	956803214	32	2	521	99 23 398 14	ROLLENSATZ
BUCHSE EN 10210-2 90/145X33	949752814	24	2	541	11 29 938 4	MONTAGETEILE
BUCHSE RD100/90.5X64.5 PO	10349225	16	7	533	11 29 426 7	MONTAGETEILE
BUCHSE RD100/90.5X64.5 PO	10349225	26	6	541	11 29 938 4	MONTAGETEILE
BUCHSE RD110/90.5X13 POM	10224403	17	3	533	11 29 426 7	MONTAGETEILE
BUCHSE RD110/90.5X13 POM	10224403	32	2	541	11 29 938 4	MONTAGETEILE
BUCHSE RD110/90.5X4.85 PO	10224407	20	4	533	11 29 426 7	MONTAGETEILE
BUCHSE RD110/90.5X4.85 PO	10224407	29	1	541	11 29 938 4	MONTAGETEILE
BUCHSE RD110/90.5X6 POM	10224406	19	4	533	11 29 426 7	MONTAGETEILE

Bezeichnung	Artikel	Pos.	Menge	Blatt	Baugruppe	Bezeichnung
BUCHSE RD110/90.5X6 POM	10224406	30	2	541	11 29 938 4	MONTAGETEILE
BUCHSE RD130/120X26 KUNST	10349224	26	2	533	11 29 426 7	MONTAGETEILE
BUCHSE RD130/120X26 KUNST	10349224	27	2	541	11 29 938 4	MONTAGETEILE
BUCHSE RD130/120X30 KUNST	10223371	11	1	329	99 29 258 14	EZW ROLLENPAKET
BUCHSE RD130/90.5X8.5 POM	10224404	18	2	533	11 29 426 7	MONTAGETEILE
BUCHSE RD130/90.5X8.5 POM	10224404	31	1	541	11 29 938 4	MONTAGETEILE
BUCHSE RD160/140.5X40 POM	10349289	18	4	570	11 28 774 6	MONTAGETEILE
BUCHSENEINSATZ	605609514	94	1	29	11 24 519 0	OW EL
BUCHSENEINSATZ	605609514	32	1	34	10 56 645 8	KLEMMKASTEN
BUCHSENEINSATZ	605609514	51	1	578	97 14 959 03	SPITZENENDSCHALTER EL
BUCHSENEINSATZ	605609514	51	1	583	91 95 871 14	SPITZENENDSCHALTER EL
BUCHSENEINSATZ	605609514	51	1	634	10 51 167 1	ENDSCHALTER EL
BUCHSENEINSATZ	605612014	42	1	34	10 56 645 8	KLEMMKASTEN
BUCHSENEINSATZ	605616114	81	2	566	10 57 624 5	KABELSATZ
BUCHSENGEHAEUSE	6203137	93	1	352	11 27 973 6	KABINE EL
BUCHSENKONTAKT	6003031	47	6	351	11 27 973 6	KABINE EL
BUCHSENKONTAKT	6003031	95	6	352	11 27 973 6	KABINE EL
BUEGEL	10099007	5	1	334	99 29 388 14	BUEGEL KPL
BUEGEL	10099010	6	1	331	99 33 537 14	SEILSCHUTZ EZW KPL
BUEGEL	10289976	72	1	380	10 22 506 8	FAHRERSITZ
BUEGEL	10289976	72	1	692	10 04 363 3	FAHRERSITZ LUFTGEFEDERT
BUEGEL	10336583	10	2	41	10 51 961 6	OELKUEHLER EINBAU
BUEGEL	10336584	11	2	41	10 51 961 6	OELKUEHLER EINBAU
BUEGEL	10336709	1	1	334	99 29 388 14	BUEGEL KPL
BUEGEL	10336711	2	2	332	99 29 389 14	SEITENTEIL
BUEGEL	10336711	2	2	333	99 29 392 14	SEITENTEIL
BUEGEL	10349206	7	8	298	10 54 591 0	MOTORABDECKUNG
BUEGEL	10445651	39	2	302	11 24 483 7	BEF-TEILE OW
BUEGEL	10555261	8	2	641	99 23 420 14	ZWISCHENABSPANNUNG NR
BUEGEL	10575967	13	1	302	11 24 483 7	BEF-TEILE OW
BUEGEL	10575968	15	1	302	11 24 483 7	BEF-TEILE OW
BUEGEL	10575969	18	1	302	11 24 483 7	BEF-TEILE OW
BUEGEL	10575970	23	8	302	11 24 483 7	BEF-TEILE OW
BUEGEL	10575971	37	3	302	11 24 483 7	BEF-TEILE OW
BUEGEL	10575985	20	2	302	11 24 483 7	BEF-TEILE OW
BUEGEL	10579757	26	1	302	11 24 483 7	BEF-TEILE OW
BUEGEL	10592334	19	1	515	10 59 863 3	PENDEL KPL
BUEGEL	10592619	43	1	302	11 24 483 7	BEF-TEILE OW
BUEGEL	10592621	44	1	302	11 24 483 7	BEF-TEILE OW
BUEGEL	10597981	2	2	60	10 56 067 3	BATTERIE EINBAU KPL
BUEGEL	11234405	58	1	302	11 24 483 7	BEF-TEILE OW
BUEGEL	11234413	59	1	302	11 24 483 7	BEF-TEILE OW
BUEGEL	11247011	38	1	302	11 24 483 7	BEF-TEILE OW
BUEGEL	11247375	22	1	302	11 24 483 7	BEF-TEILE OW
BUEGEL	11247791	29	1	302	11 24 483 7	BEF-TEILE OW
BUEGEL	11247808	33	1	302	11 24 483 7	BEF-TEILE OW
BUEGEL	11248460	12	1	268	11 24 114 3	ABGASANLAGE
BUEGEL	11248969	9	2	282	11 24 409 0	VERKLEIDUNG OW EINBAU KP
BUEGEL	11257849	72	1	304	11 24 483 7	BEF-TEILE OW
BUEGEL	11257851	75	3	304	11 24 483 7	BEF-TEILE OW
BUEGEL	11263413	16	1	164	11 24 113 8	MOTORLAGER KPL
BUEGEL	11265945	35	1	302	11 24 483 7	BEF-TEILE OW
BUEGEL	11279036	44	1	275	11 24 114 5	ANLAGE HARNSTOFF EINBAU
BUEGEL	11279237	48	1	275	11 24 114 5	ANLAGE HARNSTOFF EINBAU
BUEGEL	11308593	14	1	268	11 24 114 3	ABGASANLAGE
BUEGEL	11308594	15	1	268	11 24 114 3	ABGASANLAGE
BUEGEL	7370581	73	1	380	10 22 506 8	FAHRERSITZ
BUEGEL	949758314	24	1	302	11 24 483 7	BEF-TEILE OW
BUEGEL	958478414	56	2	284	11 24 409 0	VERKLEIDUNG OW EINBAU KP
BUEGEL	958478414	10	10	298	10 54 591 0	MOTORABDECKUNG

Bezeichnung	Artikel	Pos.	Menge	Blatt	Baugruppe	Bezeichnung
BUEGEL	958478414	15	4	422	99 26 718 14	PODEST
BUEGEL	958478414	5	2	624	11 24 575 5	PODEST
BUEGEL	959465714	38	2	282	11 24 409 0	VERKLEIDUNG OW EINBAU KP
BUEGEL	967313703	25	1	302	11 24 483 7	BEF-TEILE OW
BUEGEL	971304903	1	2	415	99 08 357 14	ANHAENGEKETTE
BUEGEL	993334214	36	2	525	11 24 336 5	ANLENKSTUECK NADEL KPL
BUEGEL KPL	992938814	3	4	331	99 33 537 14	SEILSCHUTZ EZW KPL
BUEGEL SCHWK	10574837	15	1	619	10 55 372 1	DACHGELAENDER NRS
BUEGEL SCHWK	10575981	11	1	302	11 24 483 7	BEF-TEILE OW
BUEGEL SCHWK	10575984	14	1	302	11 24 483 7	BEF-TEILE OW
BUEGEL SCHWK	10576104	19	1	302	11 24 483 7	BEF-TEILE OW
BUEGEL SCHWK	10585933	16	2	619	10 55 372 1	DACHGELAENDER NRS
BUEGEL SCHWK	10585936	17	1	619	10 55 372 1	DACHGELAENDER NRS
BUEGELSCHELLE	10144699	20	1	268	11 24 114 3	ABGASANLAGE
BUNDBOLZEN	11297460	2	1	677	11 23 623 3	TASCHENSCHLOSS
BUNDBUCHSE	592290614	4	1	375	59 22 905 14	SPIEGEL + SONNENBLENDE
BUNDBUCHSE 40/80X51 CUSN	790519814	11	2	58	10 58 163 4	KABINENAUFHAENGUNG KPL
BUNDBUCHSE 90/140X18 S35	950298014	15	4	533	11 29 426 7	MONTAGETEILE
BUNDBUCHSE 90/140X18 S35	950298014	13	4	541	11 29 938 4	MONTAGETEILE
BUNDMUTTER M14X1.5	514618508	47	1	86	11 21 993 0	PUMPENGEHAEUSE
BUNDSCHRAUBE M33X220 10.	11266734	12	76	51	10 51 963 1	OW DREHVERBINDUNG EINBA
BUNDSCHRAUBE M33X245 10.	10512966	10	80	387	10 51 969 6	VERBINDUNG OW UW
BUNDSCHRAUBE MO90X4108	10522847	2	1	584	79 03 862 14	LASTHAKEN
C-SCHIENE SCHWK	10599614	47	1	302	11 24 483 7	BEF-TEILE OW
CAN MODUL	10347554	1	1	30	10 35 167 4	CAN MODUL
CAN MODUL	10351656	21	1	28	11 24 519 0	OW EL
CAN MODUL	10351660	23	1	28	11 24 519 0	OW EL
CAN MODUL	10351667	22	1	28	11 24 519 0	OW EL
CAN MODUL	10351668	26	1	28	11 24 519 0	OW EL
CAN MODUL	10351671	24	1	28	11 24 519 0	OW EL
CAN MODUL	10351672	27	1	28	11 24 519 0	OW EL
CAN MODUL	10351674	28	1	28	11 24 519 0	OW EL
CAN MODUL	10677274	23	1	362	11 26 095 7	STEUERSTAND RE
DACH	10545911	3	1	282	11 24 409 0	VERKLEIDUNG OW EINBAU KP
DACH	10545914	5	1	282	11 24 409 0	VERKLEIDUNG OW EINBAU KP
DACH	10545916	7	1	282	11 24 409 0	VERKLEIDUNG OW EINBAU KP
DACH	10545917	8	1	282	11 24 409 0	VERKLEIDUNG OW EINBAU KP
DACH	10545957	11	1	282	11 24 409 0	VERKLEIDUNG OW EINBAU KP
DACH	10545958	12	1	282	11 24 409 0	VERKLEIDUNG OW EINBAU KP
DACH	10545968	3	1	298	10 54 591 0	MOTORABDECKUNG
DACH	10545969	4	1	298	10 54 591 0	MOTORABDECKUNG
DACH	10545970	5	1	298	10 54 591 0	MOTORABDECKUNG
DACH	10546335	6	1	298	10 54 591 0	MOTORABDECKUNG
DACH	10563073	16	1	282	11 24 409 0	VERKLEIDUNG OW EINBAU KP
DACH	10563099	1	1	298	10 54 591 0	MOTORABDECKUNG
DACH	11244758	14	1	282	11 24 409 0	VERKLEIDUNG OW EINBAU KP
DACH	11244865	13	1	282	11 24 409 0	VERKLEIDUNG OW EINBAU KP
DACHGELAENDER NRS	10553721	553	1	3	01 38 281 14	LR 1300 SX
DACHSCHEIBE	592288614	44	1	366	10 35 250 8	KABINE
DATEN KARTE CF2	10541109	32	1	354	10 55 963 5	SCHALTSCHR X1
DECKEL	10122317	1	1	252	10 14 637 4	VERSCHLUSSTEILE
DECKEL	10127967	1	1	245	10 12 797 9	VERSCHLUSSTEILE
DECKEL	10133334	8	1	95	10 11 834 9	DOPPELV.PUMPE
DECKEL	10134561	12	1	103	10 13 333 4	DECKEL
DECKEL	10149013	11	1	182	10 14 861 5	OELWANNE VORM.
DECKEL	10520927	14	1	48	10 56 073 3	KRAFTSTOFFTANK KPL
DECKEL	10572054	27	4	665	11 89 568 6	SELBSTVERLADESYSTEM NR
DECKEL	10572241	3	1	402	10 55 154 8	SCHNELLVERSCHLUSSKUPPL
DECKEL	10572242	3	1	454	10 55 157 6	SCHNELLVERSCHLUSSKUPPL
DECKEL	10593544	48	2	350	11 29 327 3	KABINE KPL

Bezeichnung	Artikel	Pos.	Menge	Blatt	Baugruppe	Bezeichnung
DECKEL	10593554	49	1	350	11 29 327 3	KABINE KPL
DECKEL	10595280	12	2	168	10 58 017 0	RUECKLAUFROHR
DECKEL	10687924	82	1	358	10 03 610 7	TASTATUR BEDIENPULT X11
DECKEL	11217289	5	1	167	10 57 532 2	ANSAUGROHR OEL KPL
DECKEL	11219927	2	1	81	11 21 990 5	VERSTELLUNG
DECKEL	11219929	3	1	81	11 21 990 5	VERSTELLUNG
DECKEL	11226090	110	1	346	51 14 347 14	DW SICHERUNGSBLOCK
DECKEL	11267378	1	1	82	11 21 992 7	DECKEL
DECKEL	11267396	1	1	83	11 21 992 9	DECKEL
DECKEL	385072014	65	2	58	10 58 163 4	KABINENAUFHAENGUNG KPL
DECKEL	7027755	3	1	273	10 30 300 7	KRAFTSTOFFVORFILTER
DECKEL	934756014	20	1	582	99 38 329 14	SPITZEN AL KPL
DECKEL	942264714	21	2	44	10 56 070 1	TANK HYDR KPL
DECKEL	949196514	8	2	329	99 29 258 14	EZW ROLLENPAKET
DECKEL	949724114	23	2	521	99 23 398 14	ROLLENSATZ
DECKEL	949741114	30	1	533	11 29 426 7	MONTAGETEILE
DECKEL	949940914	12	2	570	11 28 774 6	MONTAGETEILE
DECKEL	949943614	14	1	570	11 28 774 6	MONTAGETEILE
DECKEL	949944514	13	2	570	11 28 774 6	MONTAGETEILE
DECKEL	956856614	11	1	529	11 29 649 2	BOLZEN KPL
DECKEL	970553303	29	1	533	11 29 426 7	MONTAGETEILE
DECKEL	970553303	19	1	541	11 29 938 4	MONTAGETEILE
DECKEL	971333403	13	1	408	10 55 876 0	RAUPENTRAEGER RE KPL
DECKEL	971333403	13	1	417	10 55 876 1	RAUPENTRAEGER LI KPL
DECKEL KPL	10501620	1	1	27	55 09 453 14	OELMOTOR
DECKEL KPL	10548543	35	1	8	11 29 618 6	OW HYDR
DECKEL KPL	10551191	21	2	392	11 25 903 1	VERROHRUNG HYDR
DECKPLATTE	5005525	41	4	419	11 23 548 1	MITTELTEIL KPL
DECKPLATTE	602016514	73	4	451	11 23 820 3	ANLENKSTUECK KPL
DECKPLATTE	602025814	93	3	255	11 24 114 0	KUEHLER EINBAU WASSER
DECKPLATTE	602026414	48	3	408	10 55 876 0	RAUPENTRAEGER RE KPL
DECKPLATTE	602026414	48	3	417	10 55 876 1	RAUPENTRAEGER LI KPL
DECKPLATTE	7005053	92	3	255	11 24 114 0	KUEHLER EINBAU WASSER
DECKPLATTE	7005053	39	2	419	11 23 548 1	MITTELTEIL KPL
DECKPLATTE	7008583	40	2	419	11 23 548 1	MITTELTEIL KPL
DICHTKANTENRING	10588729	5	1	467	59 20 224 14	LASTHALTEVENTIL
DICHTMUTTER BN 1226 M12	7381226	5	1	201	10 12 949 9	ENDREGELVENTIL
DICHTMUTTER M12X1.75	7005072	18	2	397	51 24 059 14	V.MOTOR
DICHTRING	10011864	6	17	217	10 14 588 5	LECKOELRUECKLAUF
DICHTRING	10011864	7	2	238	10 14 622 4	TAKTVENTIL
DICHTRING	10011865	11	2	217	10 14 588 5	LECKOELRUECKLAUF
DICHTRING	10011866	19	3	217	10 14 588 5	LECKOELRUECKLAUF
DICHTRING	10011866	2	11	231	10 14 821 7	ROHRLEITUNG ANBAU
DICHTRING	10011866	6	1	233	10 14 274 4	KUEHLWASSERENTLUEFTUN
DICHTRING	10011867	16	2	237	10 14 511 2	ABGASSTUTZEN ANBAU
DICHTRING	10011868	2	1	185	10 13 451 7	NIVEAUGEBER
DICHTRING	10011868	7	14	216	10 14 333 9	KRAFTSTOFFLEITUNGEN
DICHTRING	10011870	8	1	221	10 14 736 9	ANSAUGSTUTZEN ANBAU
DICHTRING	10011870	27	1	236	10 14 013 6	ATL-ANBAU
DICHTRING	10011871	14	2	217	10 14 588 5	LECKOELRUECKLAUF
DICHTRING	10113731	3	1	201	10 12 949 9	ENDREGELVENTIL
DICHTRING	11226035	80	1	346	51 14 347 14	DW SICHERUNGSBLOCK
DICHTRING	11226086	92	1	346	51 14 347 14	DW SICHERUNGSBLOCK
DICHTRING	4900262	32	7	254	11 24 114 0	KUEHLER EINBAU WASSER
DICHTRING	7013116	22	1	102	92 73 644	DS REGELVENTIL
DICHTRING	710004514	5	4	513	11 28 610 5	ARRETIERUNG KPL
DICHTRING	710020114	15	1	617	54 02 705 14	ANTRIEB KPL
DICHTRING	710031014	10	1	616	54 02 704 14	ABTRIEB KPL
DICHTRING	710069314	11	1	435	11 26 260 6	WINDE 1 HYDR
DICHTRING	710069314	11	1	441	11 26 261 1	WINDE 2 HYDR

Bezeichnung	Artikel	Pos.	Menge	Blatt	Baugruppe	Bezeichnung
DICHTRING	7101008	5	1	182	10 14 861 5	OELWANNE VORM.
DICHTRING	7101021	3	1	176	10 13 845 0	ENDREGELVENTIL
DICHTRING	7101021	7	1	182	10 14 861 5	OELWANNE VORM.
DICHTRING	7101021	10	1	183	50 04 624	OELABLASSSCHRAUBE
DICHTRING	7101022	23	4	44	10 56 070 1	TANK HYDR KPL
DICHTRING	7101022	33	1	254	11 24 114 0	KUEHLER EINBAU WASSER
DICHTRING	710102514	56	4	261	11 24 114 1	KUEHLER EINBAU LADELUFT
DICHTRING	710103008	29	1	275	11 24 114 5	ANLAGE HARNSTOFF EINBAU
DICHTRING	710103714	34	1	254	11 24 114 0	KUEHLER EINBAU WASSER
DICHTRING	710103814	5	4	66	10 51 969 5	A-BOCK AUFRICHTZYL HYDR
DICHTRING	710104514	31	2	614	54 02 702 14	SEILTROMMEL KPL
DICHTRING	710121014	123	1	339	99 04 645 14	ANTRIEB
DICHTRING	7381225	14	1	175	10 14 768 6	AGGREGATETRAEGER ANBA
DICHTRING	7381225	13	1	200	10 12 948 0	OELKUEHLER VORM.
DICHTRING	7381367	2	1	101	90 74 418	REGELVENTIL
DICHTRING	7381367	94	2	102	92 73 644	DS REGELVENTIL
DICHTRING	790295414	61	2	339	99 04 645 14	ANTRIEB
DICHTRING	790297914	40	1	548	59 21 280 14	EINFACHWIRKZYL
DICHTRING	790347114	550	11	78	11 24 682 0	VERTEILERGETRIEBE
DICHTRING	790347214	560	1	78	11 24 682 0	VERTEILERGETRIEBE
DICHTRING	790403914	310	1	78	11 24 682 0	VERTEILERGETRIEBE
DICHTRING	790444514	65	1	339	99 04 645 14	ANTRIEB
DICHTRINGDECKEL	592178514	20	1	78	11 24 682 0	VERTEILERGETRIEBE
DICHTSATZ KPL.	10138033	90	1	116	10 12 878 7	V.PUMPE
DICHTSATZ KPL.	512402214	990	1	322	51 22 942 14	OELMOTOR
DICHTSCHEIBE	592288114	31	1	373	59 22 871 14	FRONTSCHEIBE KPL
DICHTSCHRAUBE	11100007	5	1	152	10 22 601 3	V.PUMPE
DICHTSCHRAUBE	11220932	4	1	142	10 22 650 5	V.PUMPE
DICHTSCHRAUBE	11221267	5	1	142	10 22 650 5	V.PUMPE
DICHTSTOPFEN	10030837	14	14	174	10 15 438 6	KURBELGEHAEUSE KPL.
DICHTSTOPFEN	10134753	3	2	218	10 14 382 8	EINSPRITZLEITUNGEN
DICHTSTOPFEN	605614714	14	2	712	10 52 957 6	BETANKUNGSPUMPE KPL
DICHTSTOPFEN	7008121	24	4	129	10 14 131 6	ANSCHLUSSPLATTE VORM.
DICHTSTOPFEN	7380480	7	1	412	96 93 178 01	FAHRANTRIEB
DICHTSTOPFEN	7380490	23	2	129	10 14 131 6	ANSCHLUSSPLATTE VORM.
DICHTSTOPFEN	7380779	16	2	204	10 13 382 3	ABSAUGPUMPE VORM.
DICHTSTOPFEN	7382069	8	1	174	10 15 438 6	KURBELGEHAEUSE KPL.
DICHTUNG	10115623	18	1	236	10 14 013 6	ATL-ANBAU
DICHTUNG	10117891	2	1	199	10 12 948 1	OELKUEHLER ANBAU
DICHTUNG	10118556	2	6	220	10 14 736 6	LUFTANSAUGROHR ANBAU
DICHTUNG	10119923	3	2	200	10 12 948 0	OELKUEHLER VORM.
DICHTUNG	10125740	3	1	236	10 14 013 6	ATL-ANBAU
DICHTUNG	10126427	3	1	181	10 14 844 4	OELWANNE MIT BEFEST.
DICHTUNG	10126510	2	1	195	10 13 475 1	ZYLINDERKOPFDECKEL ANBA
DICHTUNG	10126510	2	1	196	10 12 653 5	ZYLINDERKOPFDECKEL ANBA
DICHTUNG	10126510	3	1	198	10 13 469 6	ZYLINDERKOPFDECKEL ANBA
DICHTUNG	10126738	2	1	175	10 14 768 6	AGGREGATETRAEGER ANBA
DICHTUNG	10135885	2	6	234	10 14 144 4	ABGASROHR ANBAU
DICHTUNG	10137721	5	1	242	10 11 557 7	SCHWUNGRADGEHAEUSE AN
DICHTUNG	10142813	3	1	269	10 14 404 9	SCR KPL.
DICHTUNG	10144102	31	2	268	11 24 114 3	ABGASANLAGE
DICHTUNG	10144861	14	1	275	11 24 114 5	ANLAGE HARNSTOFF EINBAU
DICHTUNG	10294171	4	1	273	10 30 300 7	KRAFTSTOFFVORFILTER
DICHTUNG	10297876	2	1	148	10 35 160 3	STEUERVENTIL
DICHTUNG	10297876	2	1	157	10 11 497 5	STEUERVENTIL
DICHTUNG	11251434	6	1	396	11 89 617 8	DS
DICHTUNG	552006114	26	2	44	10 56 070 1	TANK HYDR KPL
DICHTUNG	592290914	93	1	367	10 35 250 8	KABINE
DICHTUNG	7011131	2	1	183	50 04 624	OELABLASSSCHRAUBE
DICHTUNG	7412935	18	1	273	10 30 300 7	KRAFTSTOFFVORFILTER

Bezeichnung	Artikel	Pos.	Menge	Blatt	Baugruppe	Bezeichnung
DICHTUNG	790230014	9	2	689	10 51 728 1	VERROHRUNG HYDR
DICHTUNG	9079130	2	1	243	10 11 912 8	VERSCHLUSSTEILE
DICHTUNG	9144762	3	1	197	91 44 757	VERSCHLUSSDECKEL
DICHTUNG	9275428	76	1	102	92 73 644	DS REGELVENTIL
DICHTUNG	9882207	15	2	95	10 11 834 9	DOPPELV.PUMPE
DICHTUNG	9882207	15	2	114	92 76 408	DS DOPPELPUMPE
DICHTUNGSMITTEL	8627609	109	1	182	10 14 861 5	OELWANNE VORM.
DICHTUNGSMODUL	602453214	5	2	363	91 65 251 14	KABELDURCHFUEHRUNG KAB
DICHTUNGSMODUL	602453914	8	2	363	91 65 251 14	KABELDURCHFUEHRUNG KAB
DICHTUNGSMODUL	602454614	2	2	363	91 65 251 14	KABELDURCHFUEHRUNG KAB
DICHTUNGSMODUL	602454714	4	2	363	91 65 251 14	KABELDURCHFUEHRUNG KAB
DICHTUNGSMODUL	602457014	3	2	363	91 65 251 14	KABELDURCHFUEHRUNG KAB
DICHTUNGSMODUL	602457114	6	2	363	91 65 251 14	KABELDURCHFUEHRUNG KAB
DICHTUNGSMODUL	602457214	7	2	363	91 65 251 14	KABELDURCHFUEHRUNG KAB
DICHTUNGSMUTTER M6	7361600	21	1	102	92 73 644	DS REGELVENTIL
DICHTUNGSMUTTER M8	7361601	11	1	89	11 06 730 4	ABSCHALTVENTIL
DICHTUNGSMUTTER M8	7361601	37	2	102	92 73 644	DS REGELVENTIL
DICHTUNGSPROFIL	10351728	148	1	367	10 35 250 8	KABINE
DICHTUNGSPROFIL	10351729	149	1	367	10 35 250 8	KABINE
DICHTUNGSPROFIL	262107714	13	4	290	10 57 883 5	TUER
DICHTUNGSPROFIL	262107714	11	4.1	292	10 57 897 6	TUER
DICHTUNGSPROFIL	262107714	13	2.6	294	10 57 940 0	TUER
DICHTUNGSPROFIL	262107714	13	1.35	295	10 56 623 7	TUER
DICHTUNGSPROFIL	262107714	11	2.8	296	10 56 580 8	TUER
DIESELMOTOR	10140327	1	1	169	11 24 113 9	MOTORVORMONTAGE
DISTANZHUELSE	10141438	7	24	234	10 14 144 4	ABGASROHR ANBAU
DISTANZHUELSE	11217169	47	6	275	11 24 114 5	ANLAGE HARNSTOFF EINBAU
DISTANZRING 91/127X8 S355J	956803514	24	2	521	99 23 398 14	ROLLENSATZ
DISTANZROHR	10517047	8	2	593	79 04 871 14	UNTERFLASCHE
DISTANZROHR	11493578	14	2	586	79 04 112 14	UNTERFLASCHE
DISTANZSCHEIBE	10226471	14	1	373	59 22 871 14	FRONTSCHEIBE KPL
DISTANZSCHEIBE RD30X1 AL	10349263	52	24	284	11 24 409 0	VERKLEIDUNG OW EINBAU KP
DISTANZSTUECK	10227757	17	4	422	99 26 718 14	PODEST
DISTANZSTUECK	11216088	32	1	58	10 58 163 4	KABINENAUFHAENGUNG KPL
DISTANZSTUECK	289064214	24	4	320	10 51 968 6	EZW OW EINBAU KPL
DOPPEL T-MEISTERSCH EIN	10511274	15	1	2	01 38 281 14	LR 1300 SX
DOPPELABREISSSTOPFEN	10337055	31	1	144	11 22 127 4	PUMPENELEMENT
DOPPELABREISSSTOPFEN	10337055	31	1	154	11 21 593 6	PUMPENELEMENT
DOPPELABREISSSTOPFEN	10337055	28	5	399	11 22 473 8	VERSTELLUNG
DOPPELABREISSSTOPFEN	10424238	30	3	86	11 21 993 0	PUMPENGEHAEUSE
DOPPELABREISSSTOPFEN	7012971	29	3	86	11 21 993 0	PUMPENGEHAEUSE
DOPPELABREISSSTOPFEN	7012971	31	1	399	11 22 473 8	VERSTELLUNG
DOPPELDRUCKBEGRENZUNG	10537607	10	2	17	10 35 148 6	VENTILBLOCK
DOPPELHAKEN	11271489	1	1	595	11 27 148 8	AUFHAENGUNG
DOPPELHOHLSCHRAUBE 6X6	10014864	7	1	217	10 14 588 5	LECKOELRUECKLAUF
DOPPELRUECKSCHLAGVENTI	511607014	6	1	465	10 51 959 1	VERROHRUNG HYDR
DOPPELV.PUMPE	10118349	4	1	75	11 24 773 5	AGGREGAT HYDR
DOPPELWIRKZYL	10099173	2	2	465	10 51 959 1	VERROHRUNG HYDR
DOPPELWIRKZYL	10227855	1	2	645	10 51 971 2	SELBSTVERLADESYSTEM H
DOPPELWIRKZYL	513313914	10	2	8	11 29 618 6	OW HYDR
DOPPELWIRKZYL	513314114	13	4	392	11 25 903 1	VERROHRUNG HYDR
DOPPELWIRKZYL	592000814	3	1	689	10 51 728 1	VERROHRUNG HYDR
DOPPELWIRKZYL	592104114	2	2	66	10 51 969 5	A-BOCK AUFRICHTZYL HYDR
DOPPELWIRKZYL	592104214	2	1	652	10 51 973 8	SELBSTVERLADESYSTEM H
DOSIERPUMPE	11110051	4	1	604	11 29 444 5	HEIZUNG NRS
DREHDURCHFUEHRUNG HYD	10550970	2	1	392	11 25 903 1	VERROHRUNG HYDR
DREHGELENK	10529080	14	1	686	10 58 064 7	VIDEOUEBERWACHUNGSANL
DREHKNOPF	10687925	80	1	358	10 03 610 7	TASTATUR BEDIENPULT X11
DREHRIEGEL KPL	10020161	6	2	290	10 57 883 5	TUER
DREHRIEGEL KPL	10020161	12	2	292	10 57 897 6	TUER

Bezeichnung	Artikel	Pos.	Menge	Blatt	Baugruppe	Bezeichnung
DREHRIEGEL KPL	10020161	9	1	294	10 57 940 0	TUER
DREHRIEGEL KPL	10020161	9	2	295	10 56 623 7	TUER
DREHRIEGEL KPL	10020161	12	2	296	10 56 580 8	TUER
DREHSCHLOSS	592285814	4	1	370	10 50 133 3	SCHIEBETUER
DREHSTROMGENERATOR	10148088	1	1	239	10 14 584 5	GENERATOR VORM.
DREHWINKELMESSUMFORME	10528626	31	1	707	10 52 952 2	DW GEBER NRS
DREHZAHLGEBER	10800265	1	1	251	10 13 307 7	DREHZAHLGEBER KPL.
DREHZAHLGEBER KPL.	10133077	20	2	250	10 14 297 7	MOTORREGELUNGSENSORIK
DROSSELKOERPER	11253687	2	1	75	11 24 773 5	AGGREGAT HYDR
DROSSELKOERPER	11253689	26	2	75	11 24 773 5	AGGREGAT HYDR
DROSSELKOERPER	917906414	3	1	674	10 55 459 4	VERROHRUNG HYDR
DROSSELKOERPER	917906414	4	1	689	10 51 728 1	VERROHRUNG HYDR
DROSSELKOERPER	929796914	6	1	608	10 51 726 2	VERROHRUNG HYDR
DROSSELKOERPER	946293614	9	1	8	11 29 618 6	OW HYDR
DROSSELKOERPER	991487414	26	1	8	11 29 618 6	OW HYDR
DROSSELKOERPER	991867414	37	1	8	11 29 618 6	OW HYDR
DROSSELRUECKSCHLAGVEN	11233730	4	1	68	10 22 540 8	VENTILBLOCK
DROSSELSCHRAUBE	7615603	8	1	399	11 22 473 8	VERSTELLUNG
DROSSELSCHRAUBE	7615604	9	1	399	11 22 473 8	VERSTELLUNG
DROSSELVENTIL	592178314	5	1	652	10 51 973 8	SELBSTVERLADESYSTEM H
DRUCKAUFNEHMER	10515473	66	2	29	11 24 519 0	OW EL
DRUCKAUFNEHMER	11219179	65	2	29	11 24 519 0	OW EL
DRUCKAUFNEHMER	693126214	11	2	526	10 53 140 9	ANLENKSTUECK EL
DRUCKBEGRENZUNGSVENTI	10350546	2	1	68	10 22 540 8	VENTILBLOCK
DRUCKBEGRENZUNGSVENTI	10593474	3	1	84	11 21 991 0	PUMPENGEHAEUSE
DRUCKBEGRENZUNGSVENTI	11219368	2	1	84	11 21 991 0	PUMPENGEHAEUSE
DRUCKBEGRENZUNGSVENTI	11233731	5	1	68	10 22 540 8	VENTILBLOCK
DRUCKBEGRENZUNGSVENTI	11233731	6	1	68	10 22 540 8	VENTILBLOCK
DRUCKBEGRENZUNGSVENTI	11233731	2	1	467	59 20 224 14	LASTHALTEVENTIL
DRUCKBEGRENZUNGSVENTI	11293250	3	2	21	59 21 458 14	VENTILBLOCK
DRUCKBEGRENZUNGSVENTI	511414514	18	1	75	11 24 773 5	AGGREGAT HYDR
DRUCKBEGRENZUNGSVENTI	511467914	4	1	608	10 51 726 2	VERROHRUNG HYDR
DRUCKBEGRENZUNGSVENTI	511475514	7	1	465	10 51 959 1	VERROHRUNG HYDR
DRUCKBEGRENZUNGSVENTI	511619614	50	2	313	51 22 527 14	OELMOTOR
DRUCKBEGRENZUNGSVENTI	511639114	6	1	547	10 53 146 1	VERROHRUNG HYDR
DRUCKBEGRENZUNGSVENTI	511639714	50	2	322	51 22 942 14	OELMOTOR
DRUCKBEGRENZUNGSVENTI	511655114	50	2	399	11 22 473 8	VERSTELLUNG
DRUCKBEGRENZUNGSVENTI	592323114	5	4	392	11 25 903 1	VERROHRUNG HYDR
DRUCKEINSPEISEVENTIL	10123236	2	2	128	10 14 131 7	RS ANSCHLUSSPLATTE
DRUCKEINSPEISEVENTIL	10135472	10	1	118	10 12 942 0	DRUCKREDUZIERVENTIL
DRUCKFEDER	10115224	6	1	399	11 22 473 8	VERSTELLUNG
DRUCKFEDER	10129501	6	1	201	10 12 949 9	ENDREGELVENTIL
DRUCKFEDER	10529089	17	1	686	10 58 064 7	VIDEOUEBERWACHUNGSANL
DRUCKFEDER	11118160	6	1	176	10 13 845 0	ENDREGELVENTIL
DRUCKFEDER	11226019	40	1	346	51 14 347 14	DW SICHERUNGSBLOCK
DRUCKFEDER	11267416	6	1	87	10 59 347 4	DRUCKBEGRENZUNGSVENTI
DRUCKFEDER	11267442	5	1	89	11 06 730 4	ABSCHALTVENTIL
DRUCKFEDER	11305568	75	16	339	99 04 645 14	ANTRIEB
DRUCKFEDER	11305579	76	16	339	99 04 645 14	ANTRIEB
DRUCKFEDER	7028143	5	1	87	10 59 347 4	DRUCKBEGRENZUNGSVENTI
DRUCKFEDER	7381699	30	21	123	10 13 802 6	RS ZYL.+STEUERPL.+WELLE
DRUCKFEDER	7382167	31	24	105	98 89 984	RS TRIEBWERK
DRUCKFEDER	7382167	31	24	109	98 89 983	RS TRIEBWERK
DRUCKFEDER	9074481	9	4	192	10 13 728 6	ZYLINDERKOPF VORM.
DRUCKFEDER	9267342	12	1	98	92 67 343	ENTLUEFTUNGSVENTIL
DRUCKFEDER	9886756	7	1	200	10 12 948 0	OELKUEHLER VORM.
DRUCKFILTER	10223581	19	1	75	11 24 773 5	AGGREGAT HYDR
DRUCKGEBER	9076531	10	2	250	10 14 297 7	MOTORREGELUNGSENSORIK
DRUCKGEBER KPL.	9076550	11	1	250	10 14 297 7	MOTORREGELUNGSENSORIK
DRUCKREDUZIERVENTIL	10129420	9	2	117	10 14 131 8	REGELVENTIL

Bezeichnung	Artikel	Pos.	Menge	Blatt	Baugruppe	Bezeichnung
DRUCKREDUZIERVENTIL	510438514	4	2	392	11 25 903 1	VERROHRUNG HYDR
DRUCKREDUZIERVENTIL	511476914	3	1	312	10 51 969 8	NADELEINZIEHWINDE HYDR
DRUCKREDUZIERVENTIL	511476914	4	1	321	10 51 968 7	HAUPT EZW HYDR
DRUCKREGELVENTIL	10115241	49	1	399	11 22 473 8	VERSTELLUNG
DRUCKROHRSTUTZEN	10131081	1	1	210	10 13 508 0	DRUCKROHRSTUTZEN
DRUCKROHRSTUTZEN	10135080	1	1	209	10 14 114 0	RS DRUCKROHRSTUTZEN
DRUCKROHRSTUTZEN	10153151	191	6	171	10 14 032 7	DIESELMOTOR
DRUCKSCHALTER	10352111	16	1	44	10 56 070 1	TANK HYDR KPL
DRUCKSCHALTER	11236712	5	1	700	11 21 750 0	VERFLUESSIGER
DRUCKSCHALTER EINSCHAL	10352119	12	1	435	11 26 260 6	WINDE 1 HYDR
DRUCKSCHALTER EINSCHAL	10352119	12	1	441	11 26 261 1	WINDE 2 HYDR
DRUCKSTAB	993081514	12	1	535	99 26 359 14	HALTESTANGE KPL
DRUCKSTIFT	10101458	3	3	147	11 49 032 3	ZYLINDER
DRUCKSTUECK M12X26 X8C	790550914	15	1	290	10 57 883 5	TUER
DRUCKSTUECK M12X26 X8C	790550914	13	1	292	10 57 897 6	TUER
DRUCKSTUECK M12X26 X8C	790550914	4	1	294	10 57 940 0	TUER
DRUCKSTUECK M12X26 X8C	790550914	4	1	295	10 56 623 7	TUER
DRUCKSTUECK M12X26 X8C	790550914	13	1	296	10 56 580 8	TUER
DRUCKTASTER	693003414	32	1	714	10 52 155 9	MODUL BETANKUNGSANLAG
DRUCKVENTIL	11229183	5	1	17	10 35 148 6	VENTILBLOCK
DRUCKVENTIL	11229185	9	1	17	10 35 148 6	VENTILBLOCK
DS	10423993	900	1	20	10 59 143 5	WEGEVENTIL
DS	10524595	1	1	17	10 35 148 6	VENTILBLOCK
DS	11219356	4	1	80	11 21 990 2	TRIEBWERK
DS	11896178	900	1	395	10 55 097 0	DREHDURCHFUEHRUNG HYD
DS	511493914	51	2	313	51 22 527 14	OELMOTOR
DS	511614214	61	1	322	51 22 942 14	OELMOTOR
DS	512259414	990	1	313	51 22 527 14	OELMOTOR
DS	512259514	61	1	313	51 22 527 14	OELMOTOR
DS	512401514	51	2	322	51 22 942 14	OELMOTOR
DS ANSCHLUSSGEHAEUSE	9274731	91	1	97	10 11 835 0	ANSCHLUSSGEHAEUSE
DS ANSCHLUSSPLATTE	10138034	3	1	134	10 13 803 3	DICHTSATZ KPL.
DS DOPPELPUMPE	9276408	98	1	96	10 11 834 9	DOPPELV.PUMPE
DS DRUCKREDUZIERVENTIL	10123210	4	2	135	10 13 803 4	DS ANSCHLUSSPLATTE
DS DRUCKREDUZIERVENTIL	10123214	90	1	118	10 12 942 0	DRUCKREDUZIERVENTIL
DS DRUCKROHRSTUTZEN	10141216	6	1	208	10 15 315 1	DRUCKROHRSTUTZEN
DS DRUCKROHRSTUTZEN	10141216	12	1	209	10 14 114 0	RS DRUCKROHRSTUTZEN
DS DRUCKVENTIL	10332095	90	1	131	10 12 323 6	DRUCKEINSPEISEVENTIL
DS DRUCKVENTIL	10332095	2	2	135	10 13 803 4	DS ANSCHLUSSPLATTE
DS INJEKTOR	10141215	6	1	207	10 15 286 7	INJEKTOR MIT BEFEST.
DS KPL	10224159	3	1	159	10 22 358 1	DRUCKFILTER
DS KPL	10351610	99	1	142	10 22 650 5	V.PUMPE
DS KPL	10595126	200	1	324	10 55 156 3	WINDE
DS KPL	502050814	990	1	258	51 22 501 14	OELMOTOR
DS KPL	512256614	250	1	346	51 14 347 14	DW SICHERUNGSBLOCK
DS KPL	512299214	990	1	347	51 22 991 14	OELMOTOR
DS KPL	981967114	990	1	609	51 02 322 14	OELMOTOR
DS KPL ZYL	10352446	1	1	466	10 09 917 3	DOPPELWIRKZYL
DS KPL ZYL	10352447	1	1	646	10 22 785 5	DOPPELWIRKZYL
DS KPL ZYL	513319014	99	1	403	51 33 141 14	DOPPELWIRKZYL
DS KPL ZYL	513319214	99	1	23	51 33 139 14	DOPPELWIRKZYL
DS KPL ZYL	790230614	900	1	690	59 20 008 14	DOPPELWIRKZYL
DS KPL ZYL	790401414	900	1	548	59 21 280 14	EINFACHWIRKZYL
DS KPL ZYL	790407714	900	1	67	59 21 041 14	DOPPELWIRKZYL
DS KPL ZYL	790407814	900	1	653	59 21 042 14	DOPPELWIRKZYL
DS MOTOR	10493890	901	1	27	55 09 453 14	OELMOTOR
DS REGELVENTIL	10122265	4	1	134	10 13 803 3	DICHTSATZ KPL.
DS REGELVENTIL	9273644	89	1	95	10 11 834 9	DOPPELV.PUMPE
DS REGELVENTIL	9273644	90	1	101	90 74 418	REGELVENTIL
DSF-RING	10142429	5	1	190	10 14 351 1	KOLBEN KPL.

Bezeichnung	Artikel	Pos.	Menge	Blatt	Baugruppe	Bezeichnung
DUESE	11226142	200	1	346	51 14 347 14	DW SICHERUNGSBLOCK
DUESE	11233732	7	1	68	10 22 540 8	VENTILBLOCK
DUESE	11239895	3	1	657	59 21 584 14	SENKBREMSVENTIL
DUESE	11249191	27	1	67	59 21 041 14	DOPPELWIRKZYL
DURCHFUEHRUNGSTUELLE	11225402	63	2	284	11 24 409 0	VERKLEIDUNG OW EINBAU KP
DURCHGANGSVENTIL	7402781	12	1	270	11 24 114 4	KRAFTSTOFFANLAGE
DURCHTRIEB	10129874	12	1	75	11 24 773 5	AGGREGAT HYDR
DURCHTRIEB	10129874	300	1	116	10 12 878 7	V.PUMPE
DURCHTRIEB	10130005	301	1	116	10 12 878 7	V.PUMPE
DURCHTRIEB	10134521	304	1	116	10 12 878 7	V.PUMPE
DURCHTRIEB	10553922	11	1	75	11 24 773 5	AGGREGAT HYDR
DW	90013762	10	2	341	10 51 968 2	DW OW
DW GEBER NRS	10522930	828	1	4	01 38 281 14	LR 1300 SX
DW GEBER NRS	10529522	3	1	706	10 52 293 0	DW GEBER NRS
DW HYDR	10519683	2	1	341	10 51 968 2	DW OW
DW OW	10519682	27	1	2	01 38 281 14	LR 1300 SX
DW SICHERUNGSBLOCK	511434714	2	1	344	10 55 216 1	VERROHRUNG HYDR
E-BAUGRUPPE	10685952	31	1	598	10 51 118 5	MODEM NRS
EINBAUVENTIL	511640714	2	1	158	51 16 377 14	VENTILBLOCKSPEISEDRUCK
EINFACHHAKEN	10522845	1	1	584	79 03 862 14	LASTHAKEN
EINFACHHAKEN	11481162	1	1	589	11 27 463 8	AUFHAENGUNG
EINFACHWIRKZYL	592128014	2	2	547	10 53 146 1	VERROHRUNG HYDR
EINFUELLSIEB	10296919	13	1	48	10 56 073 3	KRAFTSTOFFTANK KPL
EINGANGSMODUL	10144034	1	1	269	10 14 404 9	SCR KPL.
EINLASSVENTIL	10136752	2	2	192	10 13 728 6	ZYLINDERKOPF VORM.
EINSCHRAUBSTUTZEN	7402493	19	1	236	10 14 013 6	ATL-ANBAU
EINSPRITZLEITUNG	10143827	2	4	218	10 14 382 8	EINSPRITZLEITUNGEN
EINSPRITZLEITUNG	10143829	1	1	218	10 14 382 8	EINSPRITZLEITUNGEN
EINSPRITZLEITUNG	10143831	4	1	218	10 14 382 8	EINSPRITZLEITUNGEN
EINSPRITZLEITUNGEN	10143828	215	1	172	10 14 032 7	DIESELMOTOR
EINSTECKHUELSE	10871759	21	4	275	11 24 114 5	ANLAGE HARNSTOFF EINBAU
EINSTELLMUTTER	944403703	8	1	412	96 93 178 01	FAHRANTRIEB
EINSTELLSCHRAUBE	10599567	6	1	89	11 06 730 4	ABSCHALTVENTIL
EINSTELLSCHRAUBE M12X46	10129505	4	1	201	10 12 949 9	ENDREGELVENTIL
ENDGEHAEUSE	540271614	2	1	614	54 02 702 14	SEILTROMMEL KPL
ENDKAPPE	11282707	18	1	604	11 29 444 5	HEIZUNG NRS
ENDPOL KAPPE	11229635	30	3	28	11 24 519 0	OW EL
ENDREGELVENTIL	10129499	10	1	200	10 12 948 0	OELKUEHLER VORM.
ENDREGELVENTIL	10138450	14	1	171	10 14 032 7	DIESELMOTOR
ENDSCHALTER EINBAU	11310932	46	1	6	11 24 047 9	OW KPL
ENDSCHALTER EL	10511671	5	1	633	10 51 176 9	ZWISCHENHUB NADEL AL KP
ENDSCHALTER HALTER	950563214	17	1	525	11 24 336 5	ANLENKSTUECK NADEL KPL
ENDSCHALTER HUB OBEN	927521808	30	2	566	10 57 624 5	KABELSATZ
ENDSCHALTER HUB OBEN	927521808	36	1	578	97 14 959 03	SPITZENENDSCHALTER EL
ENDSCHALTER HUB OBEN	927521808	36	1	583	91 95 871 14	SPITZENENDSCHALTER EL
ENDSCHALTER HUB OBEN	927521808	36	1	634	10 51 167 1	ENDSCHALTER EL
ENDSTUECK	10097985	3	2	413	79 05 233 14	TRAGROLLE KPL
ENDWINKEL	602720514	28	4	34	10 56 645 8	KLEMMKASTEN
ENDWINKEL	602832214	54	1	708	10 56 013 7	FREMDEINSPEISUNG BATTERI
ENTLUEFTUNGSFILTER	505104914	260	1	78	11 24 682 0	VERTEILERGETRIEBE
ENTLUEFTUNGSFILTER	693113814	485	1	78	11 24 682 0	VERTEILERGETRIEBE
ENTLUEFTUNGSSCHRAUBE	485581914	54	1	34	10 56 645 8	KLEMMKASTEN
ENTLUEFTUNGSSCHRAUBE	7412942	1	1	273	10 30 300 7	KRAFTSTOFFVORFILTER
ENTLUEFTUNGSVENTIL	10351239	205	2	670	59 21 826 14	ABSTUETZZYL
ENTLUEFTUNGSVENTIL	540136314	3	4	66	10 51 969 5	A-BOCK AUFRICHTZYL HYDR
ENTLUEFTUNGSVENTIL	592089814	69	1	339	99 04 645 14	ANTRIEB
ENTLUEFTUNGSVENTIL	9267343	6	2	97	10 11 835 0	ANSCHLUSSGEHAEUSE
ENTNAHMEMODUL	10146538	5	1	277	11 24 240 8	HARNSTOFFBEHAELTER
ENTRIEGELUNGSWERKZEUG	11621284	120	1	276	11 24 114 5	ANLAGE HARNSTOFF EINBAU
ENTWAESSERUNGSSTOPFEN	602501208	55	1	34	10 56 645 8	KLEMMKASTEN

Bezeichnung	Artikel	Pos.	Menge	Blatt	Baugruppe	Bezeichnung
ERSATZELEMENT	10136801	1	1	180	10 13 680 0	KURBELGEHAEUSEENTLUEFT
ETIKETT UNIVERSAL	605756914	2	1	30	10 35 167 4	CAN MODUL
EXPANSIONSVENTIL	10223210	170	1	378	59 22 930 14	KLIMAGERAET
EXZENTERSCHRAUBE	11267405	46	1	86	11 21 993 0	PUMPENGEHAEUSE
EZW OW EINBAU KPL	10519686	1	1	318	10 51 969 1	EZW OW EINBAU KPL
EZW OW EINBAU KPL	10519691	25	1	2	01 38 281 14	LR 1300 SX
EZW ROLLENPAKET	992925814	11	1	320	10 51 968 6	EZW OW EINBAU KPL
FAECHERSCHEIBE DIN 6798 1	425221314	9	1	31	10 53 048 9	SICHERUNGSHALTER
FAECHERSCHEIBE DIN 6798 1	425221314	16	4	311	10 51 969 7	NADELEINZIEHWINDE
FAECHERSCHEIBE DIN 6798 1	425221314	20	2	633	10 51 176 9	ZWISCHENHUB NADEL AL KP
FAECHERSCHEIBE DIN 6798	425225414	21	8	633	10 51 176 9	ZWISCHENHUB NADEL AL KP
FAECHERSCHEIBE DIN 6798 5	425225614	51	4	633	10 51 176 9	ZWISCHENHUB NADEL AL KP
FAHRANTRIEB	969317801	6	1	408	10 55 876 0	RAUPENTRAEGER RE KPL
FAHRANTRIEB	969317801	6	1	417	10 55 876 1	RAUPENTRAEGER LI KPL
FAHRERSITZ	10225068	11	1	350	11 29 327 3	KABINE KPL
FAHRERSITZ EL NRS	992147314	3	1	691	99 21 973 14	FAHRERSITZ NRS
FAHRERSITZ LUFTGEFEDERT	10043633	2	1	691	99 21 973 14	FAHRERSITZ NRS
FAHRERSITZ NRS	992197314	721	1	4	01 38 281 14	LR 1300 SX
FALTENBALG	10289977	42	1	692	10 04 363 3	FAHRERSITZ LUFTGEFEDERT
FALTENBALG	10289978	40	1	692	10 04 363 3	FAHRERSITZ LUFTGEFEDERT
FALTENBALG	606272314	1	1	357	11 21 481 8	MEISTERSCHALTER
FALTENBALG	7025004	40	1	380	10 22 506 8	FAHRERSITZ
FALTENBALG	7366620	42	1	380	10 22 506 8	FAHRERSITZ
FEDER	10287741	6	1	156	10 28 766 5	VERSTELLTEIL
FEDER	10324860	2	1	147	11 49 032 3	ZYLINDER
FEDERDRUCKLAMELLENBRE	502037201	80	1	412	96 93 178 01	FAHRANTRIEB
FEDERELEMENT	10032001	7	1	273	10 30 300 7	KRAFTSTOFFVORFILTER
FEDERRING DIN 128 10	460000903	6	2	635	95 34 317 03	KABELHALTER NRS
FEDERRING DIN 7980 12 FST	4980013	25	16	95	10 11 834 9	DOPPELV.PUMPE
FEDERSTECKER	592291714	3	1	376	59 22 914 14	PODESTSICHERUNG KPL
FEDERSTECKER DIN 11024 2.	433206014	14	1	522	99 30 800 14	SPITZENENDSCHALTER EINBA
FEDERSTECKER DIN 11024 2.	433206014	21	1	574	10 55 753 7	SPITZENENDSCHALTER LI EIN
FEDERSTECKER DIN 11024 2.	433206014	21	1	575	10 55 757 6	SPITZENENDSCHALTER RE E
FEDERSTECKER DIN 11024 2.	433206014	48	1	577	99 48 521 14	SPITZEN AL KPL
FEDERSTECKER DIN 11024 2.	433206014	51	8	621	10 55 372 1	DACHGELAENDER NRS
FEDERSTECKER DIN 11024 2.	433206014	26	1	633	10 51 176 9	ZWISCHENHUB NADEL AL KP
FEDERSTECKER DIN 11024 4	433206214	33	2	450	11 23 820 3	ANLENKSTUECK KPL
FEDERSTECKER DIN 11024 4	433206214	52	10	621	10 55 372 1	DACHGELAENDER NRS
FEDERSTECKER DIN 11024 4	433206214	27	2	633	10 51 176 9	ZWISCHENHUB NADEL AL KP
FEDERSTECKER DIN 11024 5	433206314	21	6	309	99 29 803 14	VERZURRUNG BALLAST
FEDERSTECKER DIN 11024 5	433206314	31	2	637	99 10 116 14	SEILFUEHRUNG
FEDERTELLER	11267441	4	2	89	11 06 730 4	ABSCHALTVENTIL
FEDERTELLER	9076178	12	2	133	10 12 226 2	RS VERSTELLUNG
FEDERTELLER OBEN	9074480	7	4	192	10 13 728 6	ZYLINDERKOPF VORM.
FESTSTELLER	592291014	94	1	367	10 35 250 8	KABINE
FETT	10282622	100	1	202	10 13 394 5	SCHMIEROELPUMPE
FETT	10282622	100	1	203	10 13 394 7	ABSAUGPUMPE MIT BEFEST.
FETT	10282622	100	1	242	10 11 557 7	SCHWUNGRADGEHAEUSE AN
FETT	10282622	100	1	245	10 12 797 9	VERSCHLUSSTEILE
FETT	10285708	100	1	175	10 14 768 6	AGGREGATETRAEGER ANBA
FETT	10285708	100	1	187	10 14 275 8	ZYLINDER
FETT	10285708	100	1	221	10 14 736 9	ANSAUGSTUTZEN ANBAU
FETT	10285708	100	1	222	10 14 736 4	LUFTANSAUGUNG ANBAU
FETT	10285708	100	1	229	10 14 273 4	WASSERPUMPE MIT BEFEST.
FETT	10285708	100	1	230	10 14 821 5	THERMOSTATGEHAEUSE AN
FETT	10285708	100	1	232	10 14 274 2	KUEHLMITTELKRUEMMER AN
FETT	10285708	100	1	252	10 14 637 4	VERSCHLUSSTEILE
FETT	8655008	126	1	112	92 68 016	RS VERSCHLUSSRING
FETT	8655008	126	1	124	10 13 802 7	RS WELLE
FETT	8655008	126	1	132	10 13 803 2	RS VERSCHLUSSRING

Bezeichnung	Artikel	Pos.	Menge	Blatt	Baugruppe	Bezeichnung
FEUCHTESENSOR	10141261	15	1	275	11 24 114 5	ANLAGE HARNSTOFF EINBAU
FEUERLOESCHER	890100814	10	1	56	92 65 477 14	FEUERLOESCHER NRS
FEUERLOESCHER EINBAU	10578845	31	2	6	11 24 047 9	OW KPL
FEUERLOESCHER NRS	926547714	10	1	55	10 57 884 5	FEUERLOESCHER EINBAU
FILTER	11490265	38	1	86	11 21 993 0	PUMPENGEHAEUSE
FILTER	11490265	39	1	86	11 21 993 0	PUMPENGEHAEUSE
FILTER	11490265	40	1	86	11 21 993 0	PUMPENGEHAEUSE
FILTER	592293714	240	2	378	59 22 930 14	KLIMAGERAET
FILTEREINSATZ	10037623	1	1	159	10 22 358 1	DRUCKFILTER
FILTEREINSATZ	11227203	2	1	45	10 51 572 4	RUECKLAUFFILTER
FILTERELEMENT	11291031	1	1	266	11 24 679 0	LUFTFILTER
FILTERELEMENT	510713814	1	1	46	51 06 906 14	BELUEFTUNGSFILTER
FILTERELEMENT	553183708	6	1	273	10 30 300 7	KRAFTSTOFFVORFILTER
FILTERKONSOLE	10152786	1	1	215	10 14 675 3	KRAFTSTOFFFEINFILTER
FILTERLUEFTER EINBAU	611052614	61	1	351	11 27 973 6	KABINE EL
FILTERMATTE	611124514	1	1	364	61 10 526 14	FILTERLUEFTER EINBAU
FILZSTREIFEN	261100714	12	2	614	54 02 702 14	SEILTROMMEL KPL
FLACHDICHTRING	10588725	4	1	467	59 20 224 14	LASTHALTEVENTIL
FLACHDICHTUNG	9276860	37	2	95	10 11 834 9	DOPPELV.PUMPE
FLACHDICHTUNG	9276860	37	2	114	92 76 408	DS DOPPELPUMPE
FLACHKAEFIG	501532014	9	1	614	54 02 702 14	SEILTROMMEL KPL
FLACHKOPFSCHRAUBE ISO 7	10541536	19	20	350	11 29 327 3	KABINE KPL
FLACHKOPFSCHRAUBE ISO 70	10541540	4	11	383	11 26 095 6	STEUERKONSOLE RE KPL
FLACHKOPFSCHRAUBE ISO 7	10541561	28	16	350	11 29 327 3	KABINE KPL
FLACHKOPFSCHRAUBE ISO 7	10541561	6	3	384	97 07 857 03	LIBELLE EINBAU
FLACHKOPFSCHRAUBE ISO 7	400180214	35	8	350	11 29 327 3	KABINE KPL
FLACHKOPFSCHRAUBE ISO 7	400180214	30	4	359	10 53 171 8	TASTATUR
FLACHKOPFSCHRAUBE ISO 7	10541563	16	2	710	10 52 155 4	BETANKUNGSANLAGE NRS
FLACHKOPFSCHRAUBE ISO 7	400180314	36	15	350	11 29 327 3	KABINE KPL
FLACHKUPFER EL	10530486	6	1	31	10 53 048 9	SICHERUNGSHALTER
FLACHRUNDSCHRAUBE DIN	11314349	11	3	477	11 23 749 8	AUFLAGE KPL
FLACHRUNDSCHRAUBE DIN	11314349	14	3	494	11 23 290 7	AUFLAGE KPL
FLACHRUNDSCHRAUBE DIN	11314349	14	4	495	11 23 292 2	AUFLAGE KPL
FLACHRUNDSCHRAUBE DIN	11314349	14	4	579	11 25 204 2	AUFLAGE KPL
FLACHSTECKER	602203914	55	6	351	11 27 973 6	KABINE EL
FLACHSTECKER	602203914	92	6	352	11 27 973 6	KABINE EL
FLACHSTECKER	602203914	71	2	715	10 52 155 9	MODUL BETANKUNGSANLAG
FLACHSTECKERGEHAEUSE	602208714	92	1	354	10 55 963 5	SCHALTSCHR X1
FLACHSTECKERGEHAEUSE	602209014	91	1	352	11 27 973 6	KABINE EL
FLACHSTECKERGEHAEUSE	602305914	54	3	351	11 27 973 6	KABINE EL
FLACHSTECKERGEHAEUSE	602305914	70	1	715	10 52 155 9	MODUL BETANKUNGSANLAG
FLANSCH	10583864	1	1	324	10 55 156 3	WINDE
FLANSCH	540271814	1	1	615	54 02 703 14	FLANSCH KPL
FLANSCH	552066514	22	2	44	10 56 070 1	TANK HYDR KPL
FLANSCH	944137814	24	1	75	11 24 773 5	AGGREGAT HYDR
FLANSCH	944813514	25	1	75	11 24 773 5	AGGREGAT HYDR
FLANSCH	956274314	28	4	8	11 29 618 6	OW HYDR
FLANSCH	959712714	21	1	706	10 52 293 0	DW GEBER NRS
FLANSCH KPL	540270314	22	1	612	59 20 694 14	WINDE
FLANSCHABDECKUNG	11215698	2	1	152	10 22 601 3	V.PUMPE
FLANSCHABDECKUNG	11215699	3	1	152	10 22 601 3	V.PUMPE
FLANSCHHAELFTE	510548714	105	8	10	11 29 618 6	OW HYDR
FLANSCHHAELFTE	510574414	100	8	10	11 29 618 6	OW HYDR
FLANSCHHAELFTE	510574414	21	2	167	10 57 532 2	ANSAUGROHR OEL KPL
FLANSCHHAELFTE	510586614	103	12	10	11 29 618 6	OW HYDR
FLANSCHHAELFTE	510586614	617	4	321	10 51 968 7	HAUPT EZW HYDR
FLANSCHHAELFTE	510586614	646	16	394	11 25 903 1	VERROHRUNG HYDR
FLANSCHHAELFTE	510586614	730	8	435	11 26 260 6	WINDE 1 HYDR
FLANSCHHAELFTE	510586614	730	8	441	11 26 261 1	WINDE 2 HYDR
FLANSCHHAELFTE	510586914	104	18	10	11 29 618 6	OW HYDR

Bezeichnung	Artikel	Pos.	Menge	Blatt	Baugruppe	Bezeichnung
FLANSCHHAELFTE	510586914	611	4	312	10 51 969 8	NADELEINZIEHWINDE HYDR
FLANSCHHAELFTE	510586914	630	4	344	10 55 216 1	VERROHRUNG HYDR
FLANSCHHAELFTE	510587514	101	8	10	11 29 618 6	OW HYDR
FLANSCHHAELFTE	510587514	312	2	76	11 24 773 5	AGGREGAT HYDR
FLANSCHHAELFTE	510587514	631	8	344	10 55 216 1	VERROHRUNG HYDR
FLANSCHHAELFTE	510587514	650	2	465	10 51 959 1	VERROHRUNG HYDR
FLANSCHHAELFTE	510587514	614	2	652	10 51 973 8	SELBSTVERLADESYSTEM H
FLANSCHHAELFTE	511502414	102	24	10	11 29 618 6	OW HYDR
FLANSCHHAELFTE	511502414	310	6	76	11 24 773 5	AGGREGAT HYDR
FLANSCHHAELFTE	511502414	20	6	167	10 57 532 2	ANSAUGROHR OEL KPL
FLANSCHHAELFTE	511598114	22	2	167	10 57 532 2	ANSAUGROHR OEL KPL
FLANSCHLAGER	11231270	3	1	425	10 53 039 8	WINDE
FLANSCHVERBINDUNG SAE	790227714	32	1	8	11 29 618 6	OW HYDR
FLUEGELSCHRAUBE DIN 316	485559814	14	2	60	10 56 067 3	BATTERIE EINBAU KPL
FORMSCHLAUCH	10337090	45	1	254	11 24 114 0	KUEHLER EINBAU WASSER
FORMSCHLAUCH	10350439	46	1	254	11 24 114 0	KUEHLER EINBAU WASSER
FORMSCHLAUCH	11238170	19	1	604	11 29 444 5	HEIZUNG NRS
FORMSCHLAUCH	11270026	44	1	254	11 24 114 0	KUEHLER EINBAU WASSER
FORMSCHLAUCH	11287796	25	1	254	11 24 114 0	KUEHLER EINBAU WASSER
FORMSCHLAUCH	550930514	21	1	604	11 29 444 5	HEIZUNG NRS
FORMSCHLAUCH	550936214	94	1	255	11 24 114 0	KUEHLER EINBAU WASSER
FREMDEINSPEISUNG BATTERI	10560137	843	1	4	01 38 281 14	LR 1300 SX
FRONTSCHEIBE	592287214	10	1	373	59 22 871 14	FRONTSCHEIBE KPL
FRONTSCHEIBE KPL	592287114	28	1	366	10 35 250 8	KABINE
FRONTSCHEIBE KPL	592288414	34	1	366	10 35 250 8	KABINE
FUEHRUNG	10512821	88	2	367	10 35 250 8	KABINE
FUEHRUNG	11292956	17	1	400	10 44 510 2	SCHNELLVERSCHLUSSKUPPL
FUEHRUNG KPL	959576314	100	1	368	10 22 645 4	TUERE ZUBEHOEHR
FUEHRUNGSBOLZEN	10572236	1	1	402	10 55 154 8	SCHNELLVERSCHLUSSKUPPL
FUEHRUNGSBOLZEN	10572236	1	2	454	10 55 157 6	SCHNELLVERSCHLUSSKUPPL
FUEHRUNGSBUCHSE 145/10	11310567	4	1	466	10 09 917 3	DOPPELWIRKZYL
FUEHRUNGSBUCHSE M30 X 1.	10352312	35	1	669	59 21 826 14	ABSTUETZZYL
FUEHRUNGSBUCHSE M40 X 1.	10352313	40	1	669	59 21 826 14	ABSTUETZZYL
FUEHRUNGSKONSOLE MITTE	10226458	15	1	369	95 95 763 14	FUEHRUNG KPL
FUEHRUNGSKONSOLE OBEN	10226463	305	1	368	10 22 645 4	TUERE ZUBEHOEHR
FUEHRUNGSKONSOLE UNTE	10226461	228	1	368	10 22 645 4	TUERE ZUBEHOEHR
FUEHRUNGSRING	10351499	120	2	669	59 21 826 14	ABSTUETZZYL
FUEHRUNGSRING	10352344	65	1	669	59 21 826 14	ABSTUETZZYL
FUEHRUNGSRING	10352349	70	2	669	59 21 826 14	ABSTUETZZYL
FUEHRUNGSRING	10352352	75	2	669	59 21 826 14	ABSTUETZZYL
FUEHRUNGSRING	10352354	95	1	669	59 21 826 14	ABSTUETZZYL
FUEHRUNGSRING	11267401	11	2	86	11 21 993 0	PUMPENGEHAEUSE
FUEHRUNGSRING	726206214	100	3	669	59 21 826 14	ABSTUETZZYL
FUEHRUNGSRING	790400414	10	3	548	59 21 280 14	EINFACHWIRKZYL
FUEHRUNGSRING	9266680	18	2	99	10 11 835 7	RS ANSCHLUSSGEHAEUSE
FUEHRUNGSRING	9881114	33	2	99	10 11 835 7	RS ANSCHLUSSGEHAEUSE
FUEHRUNGSROHR	9266847	1	1	184	10 14 591 9	OELMESSSTAB MIT ROHR
FUEHRUNGSSCHIENE	10226457	9	1	369	95 95 763 14	FUEHRUNG KPL
FUEHRUNGSSCHIENE	10226459	222	1	368	10 22 645 4	TUERE ZUBEHOEHR
FUEHRUNGSSCHIENE	10226462	300	1	368	10 22 645 4	TUERE ZUBEHOEHR
FUEHRUNGSSCHIENE SCHW	10537682	1	1	512	11 28 629 9	MONTAGETEILE
FUEHRUNGSSCHIENE SCHW	919956014	2	2	512	11 28 629 9	MONTAGETEILE
FUEHRUNGSSCHIENE SCHW	919956114	3	2	512	11 28 629 9	MONTAGETEILE
FUELLANSCHLUSS	10448187	14	1	52	11 27 315 5	ZENTRALSCHMIERUNG
FUSS SCHWK	990954814	31	2	450	11 23 820 3	ANLENKSTUECK KPL
FUSSLEISTE	10585909	20	1	619	10 55 372 1	DACHGELAENDER NRS
FUSSLEISTE	10585910	21	1	619	10 55 372 1	DACHGELAENDER NRS
FUSSLEISTE	10585911	22	1	619	10 55 372 1	DACHGELAENDER NRS
FUSSLEISTE	10585912	23	1	619	10 55 372 1	DACHGELAENDER NRS
FUSSLEISTE	10585913	24	2	619	10 55 372 1	DACHGELAENDER NRS

Bezeichnung	Artikel	Pos.	Menge	Blatt	Baugruppe	Bezeichnung
FUSSLEISTE	10585914	25	1	619	10 55 372 1	DACHGELAENDER NRS
FUSSLEISTE	10585915	26	1	619	10 55 372 1	DACHGELAENDER NRS
FUSSLEISTE	10585916	27	1	619	10 55 372 1	DACHGELAENDER NRS
FUSSLEISTE	10585917	28	1	619	10 55 372 1	DACHGELAENDER NRS
FUSSLEISTE	10585919	30	1	619	10 55 372 1	DACHGELAENDER NRS
FUSSLEISTE	10585920	31	1	619	10 55 372 1	DACHGELAENDER NRS
FUSSLEISTE	10586854	62	1	621	10 55 372 1	DACHGELAENDER NRS
FUSSPEDAL	11219883	1	1	698	11 22 037 2	FUSSPEDAL EL EINBAU
FUSSPEDAL	11223717	210	2	352	11 27 973 6	KABINE EL
FUSSPEDAL EL EINBAU	11220372	723	1	4	01 38 281 14	LR 1300 SX
FUSSPEDAL EL EINBAU	11223691	211	1	352	11 27 973 6	KABINE EL
GABEL	970591503	1	4	641	99 23 420 14	ZWISCHENABSPANNUNG NR
GABEL	990678914	2	4	641	99 23 420 14	ZWISCHENABSPANNUNG NR
GABEL	991012514	2	4	639	99 23 405 14	ZWISCHENABSPANNUNG NR
GABEL	993034714	1	4	639	99 23 405 14	ZWISCHENABSPANNUNG NR
GABEL SCHWK	990678714	1	1	642	99 06 789 14	GABEL
GABEL SCHWK	990678814	2	1	642	99 06 789 14	GABEL
GABEL SCHWK	991011914	40	2	637	99 10 116 14	SEILFUEHRUNG
GABEL SCHWK	991012214	41	2	637	99 10 116 14	SEILFUEHRUNG
GABEL SCHWK	991012214	2	1	640	99 10 125 14	GABEL
GABEL SCHWK	991012614	1	1	640	99 10 125 14	GABEL
GARDEROBEHAKEN	592290014	76	1	367	10 35 250 8	KABINE
GASDRUCKFEDER	10800103	2	1	361	69 31 685 14	SICHERHEITSHEBEL KPL
GASFEDER	592287414	13	1	373	59 22 871 14	FRONTSCHEIBE KPL
GASFEDER	592323514	11	7	286	11 24 409 1	VERKLEIDUNG
GASFEDER	592323514	22	3	298	10 54 591 0	MOTORABDECKUNG
GEFAHRENSCHALTER	606214914	39	3	28	11 24 519 0	OW EL
GEHAEUSE	10447743	1	1	401	10 44 510 1	SCHNELLVERSCHLUSSKUPPL
GEHAEUSE	10447744	1	1	400	10 44 510 2	SCHNELLVERSCHLUSSKUPPL
GEHAEUSE	10447745	1	1	25	10 44 510 5	SCHNELLVERSCHLUSSKUPPL
GEHAEUSE	11239912	1	1	655	51 16 404 14	SENKBREMSVENTIL
GEHAEUSE	11290844	10	1	78	11 24 682 0	VERTEILERGETRIEBE
GEHAEUSE	611039214	21	1	714	10 52 155 9	MODUL BETANKUNGSANLAG
GEHAEUSE	7027989	40	1	693	70 28 516	SITZRAHMEN
GEHAEUSE ANBAU	605600401	31	1	34	10 56 645 8	KLEMMKASTEN
GEHAEUSE GEBOHRT	918975514	21	1	34	10 56 645 8	KLEMMKASTEN
GEHAEUSE KPL	10445126	3	1	453	10 51 826 1	ANLENKSTUECK HYDR
GEHAEUSE KPL	10445127	20	2	392	11 25 903 1	VERROHRUNG HYDR
GELAENDER SCHWK	10559163	18	2	619	10 55 372 1	DACHGELAENDER NRS
GELAENDER SCHWK	10585923	10	1	619	10 55 372 1	DACHGELAENDER NRS
GELAENDER SCHWK	10585924	11	1	619	10 55 372 1	DACHGELAENDER NRS
GELAENDER SCHWK	10585925	12	1	619	10 55 372 1	DACHGELAENDER NRS
GELAENDER SCHWK	10585926	13	1	619	10 55 372 1	DACHGELAENDER NRS
GELAENDERFUSS	10349402	19	10	619	10 55 372 1	DACHGELAENDER NRS
GELENKBANDKONSOLENSC	10355006	23	2	268	11 24 114 3	ABGASANLAGE
GELENKBOLZENSPANNBAND	10530689	23	2	450	11 23 820 3	ANLENKSTUECK KPL
GELENKBOLZENSPANNBAND	10530689	12	4	461	99 34 198 14	SCHILD LIEBHERR
GELENKBOLZENSPANNBAND	10530689	10	1	486	11 28 391 3	BEFESTIGUNGSCHELLE
GELENKBOLZENSPANNBAND	10531873	15	2	450	11 23 820 3	ANLENKSTUECK KPL
GELENKBOLZENSPANNBAND	10531873	16	1	485	11 28 390 8	AL BEGEHUNG
GELENKBOLZENSPANNBAND	10531873	16	1	499	11 28 583 8	AL BEGEHUNG
GELENKBOLZENSPANNBAND	10531873	16	1	505	11 28 626 1	AL BEGEHUNG
GELENKBOLZENSPANNBAND	10531889	10	1	555	11 28 667 9	BEFESTIGUNGSCHELLE
GELENKBOLZENSPANNBAND	11271451	10	2	554	11 28 979 0	GITTERROSTTRAEGER
GELENKKOPF	513319614	13	1	23	51 33 139 14	DOPPELWIRKZYL
GELENKLAGER	746911614	18	4	512	11 28 629 9	MONTAGETEILE
GELENKLAGER	746913614	17	1	650	11 23 619 7	SELBSTVERLADESYSTEM NR
GELENKLAGER	746925314	13	1	690	59 20 008 14	DOPPELWIRKZYL
GELENKLAGER	746925314	14	1	690	59 20 008 14	DOPPELWIRKZYL
GELENKLAGER	790401014	25	1	548	59 21 280 14	EINFACHWIRKZYL

Bezeichnung	Artikel	Pos.	Menge	Blatt	Baugruppe	Bezeichnung
GENERATOR VORM.	10145845	440	1	172	10 14 032 7	DIESELMOTOR
GERAETEHALTER	10445629	1	2	386	11 30 962 5	HALTER KPL
GERAETESTECKER	605010314	41	1	708	10 56 013 7	FREMDEINSPEISUNG BATTERI
GETRIEBE	10583865	3	1	324	10 55 156 3	WINDE
GETRIEBE	11893213	1	1	425	10 53 039 8	WINDE
GETRIEBENOCKENENDSCHAL	606279214	1	1	436	11 21 634 2	WINDE 1 EL
GETRIEBEOEL	11282715	990	8.3	78	11 24 682 0	VERTEILERGETRIEBE
GEWICHT	388283108	18	1	522	99 30 800 14	SPITZENENDSCHALTER EINBA
GEWICHT	388283208	19	1	522	99 30 800 14	SPITZENENDSCHALTER EINBA
GEWINDEBUCHSE	9079078	9	1	193	10 13 728 5	ZYLINDERKOPF
GEWINDEROHR	592316114	150	1	78	11 24 682 0	VERTEILERGETRIEBE
GEWINDESTANGE	11240099	16	2	680	11 22 344 2	KAMERA EINBAU
GEWINDESTANGE	11285441	10	1	556	11 28 544 3	ABSTUETZUNG KPL
GEWINDESTIFT	11267417	7	1	87	10 59 347 4	DRUCKBEGRENZUNGSVENTI
GEWINDESTIFT	7373597	17	2	397	51 24 059 14	V.MOTOR
GEWINDESTIFT DIN 913 M6X6	4980082	21	1	129	10 14 131 6	ANSCHLUSSPLATTE VORM.
GEWINDESTIFT ISO 4026 M10	404403114	21	1	350	11 29 327 3	KABINE KPL
GITTERROST	10222994	46	1	450	11 23 820 3	ANLENKSTUECK KPL
GITTERROST	10227124	11	1	422	99 26 718 14	PODEST
GITTERROST	10530418	14	1	485	11 28 390 8	AL BEGEHUNG
GITTERROST	10530418	14	1	499	11 28 583 8	AL BEGEHUNG
GITTERROST	10545915	6	1	282	11 24 409 0	VERKLEIDUNG OW EINBAU KP
GITTERROST	10581980	84	1	451	11 23 820 3	ANLENKSTUECK KPL
GITTERROST	10581981	85	1	451	11 23 820 3	ANLENKSTUECK KPL
GITTERROST	10581982	95	1	451	11 23 820 3	ANLENKSTUECK KPL
GITTERROST	10584105	50	1	284	11 24 409 0	VERKLEIDUNG OW EINBAU KP
GITTERROST	10598959	10	1	459	10 58 193 7	GITTERROST KPL
GITTERROST	10599053	24	1	459	10 58 193 7	GITTERROST KPL
GITTERROST	11239010	92	1	451	11 23 820 3	ANLENKSTUECK KPL
GITTERROST	11245758	3	1	624	11 24 575 5	PODEST
GITTERROST	11245766	5	2	623	11 24 147 8	UW PODEST
GITTERROST	11245767	6	2	623	11 24 147 8	UW PODEST
GITTERROST	11263492	6	1	512	11 28 629 9	MONTAGETEILE
GITTERROST	11275747	41	1	450	11 23 820 3	ANLENKSTUECK KPL
GITTERROST	11289788	12	1	560	11 28 979 2	AL BEGEHUNG
GITTERROST	11289789	13	2	560	11 28 979 2	AL BEGEHUNG
GITTERROST	11311245	15	2	485	11 28 390 8	AL BEGEHUNG
GITTERROST	11311245	15	1	499	11 28 583 8	AL BEGEHUNG
GITTERROST	11311245	14	1	505	11 28 626 1	AL BEGEHUNG
GITTERROST	11311371	20	1	499	11 28 583 8	AL BEGEHUNG
GITTERROST	11311371	15	1	505	11 28 626 1	AL BEGEHUNG
GITTERROST	11311390	20	1	505	11 28 626 1	AL BEGEHUNG
GITTERROST	11894306	13	2	553	11 28 978 7	AL BEGEHUNG
GITTERROST	11894307	12	1	553	11 28 978 7	AL BEGEHUNG
GITTERROST	790512314	5	1	512	11 28 629 9	MONTAGETEILE
GITTERROST	790512414	4	1	512	11 28 629 9	MONTAGETEILE
GITTERROST	790512414	51	2	525	11 24 336 5	ANLENKSTUECK NADEL KPL
GITTERROST KPL	10581937	48	1	450	11 23 820 3	ANLENKSTUECK KPL
GITTERROSTTRAEGER	11289790	10	1	553	11 28 978 7	AL BEGEHUNG
GITTERROSTTRAEGER	11289790	10	1	560	11 28 979 2	AL BEGEHUNG
GLEICHLAUF HYDR NRS	10536350	650	1	4	01 38 281 14	LR 1300 SX
GLEICHLAUF HYDR NRS	10536351	2	1	672	10 53 635 0	GLEICHLAUF HYDR NRS
GLEITDICHTRING	10352364	150	1	669	59 21 826 14	ABSTUETZZYL
GLEITDICHTRING	10352365	155	1	669	59 21 826 14	ABSTUETZZYL
GLEITDICHTRING	11253456	7	7	396	11 89 617 8	DS
GLEITFUEHRUNG 8/14X35 PO	11273242	17	4	282	11 24 409 0	VERKLEIDUNG OW EINBAU KP
GLEITRINGDICHTUNG	10097987	5	2	413	79 05 233 14	TRAGROLLE KPL
GLEITRINGDICHTUNG	7610244	2	1	412	96 93 178 01	FAHRANTRIEB
GLEITSCHEIBE	9889809	15	1	104	10 13 975 2	RS SCHWENKJOCH
GLEITSCHEIBE	9889809	15	1	105	98 89 984	RS TRIEBWERK

Bezeichnung	Artikel	Pos.	Menge	Blatt	Baugruppe	Bezeichnung
GLEITSCHEIBE	9889809	15	1	109	98 89 983	RS TRIEBWERK
GLUEHLAMPE	607021114	15	1	32	70 27 205	ARBEITSSCHEINWERFER
GLUEHLAMPE	607021714	42	1	351	11 27 973 6	KABINE EL
GLUEHLAMPE	607021714	42	1	354	10 55 963 5	SCHALTSCHR X1
GLUEHLAMPE	607023214	43	1	351	11 27 973 6	KABINE EL
GLUEHLAMPE	607023214	43	1	354	10 55 963 5	SCHALTSCHR X1
GRENZTASTER	606655108	43	1	28	11 24 519 0	OW EL
GRIFF	10020487	4	1	290	10 57 883 5	TUER
GRIFF	10020487	4	1	292	10 57 897 6	TUER
GRIFF	10020487	4	1	296	10 56 580 8	TUER
GRIFF	10579145	2	1	295	10 56 623 7	TUER
GRIFF	10579454	2	1	294	10 57 940 0	TUER
GRIFF	7025006	20	1	381	70 24 996	SITZRAHMEN
GRIFF	7025006	20	2	693	70 28 516	SITZRAHMEN
GRIFFSCHALE	10226472	18	1	370	10 50 133 3	SCHIEBETUER
GRIFFSCHALE	592289614	2	1	374	10 35 267 2	KLAPPE KPL
GRUNDPLATTE KPL	992757214	10	1	306	99 23 386 14	BALLASTGEWICHT ANORD
GRUNDPLATTE SCHWK	992741214	10	1	307	99 27 572 14	GRUNDPLATTE KPL
GUMMI	10522190	5	1	373	59 22 871 14	FRONTSCHEIBE KPL
GUMMI	10535526	12	1	479	99 29 588 14	AUFLAGE
GUMMI	10535526	12	2	480	10 35 063 3	HALTERUNG
GUMMI	10540082	68	2	450	11 23 820 3	ANLENKSTUECK KPL
GUMMI	11269800	9	1	254	11 24 114 0	KUEHLER EINBAU WASSER
GUMMI	11285382	11	1	486	11 28 391 3	BEFESTIGUNGSCHELLE
GUMMI	11285382	15	2	525	11 24 336 5	ANLENKSTUECK NADEL KPL
GUMMI	11285382	11	1	555	11 28 667 9	BEFESTIGUNGSCHELLE
GUMMI	289040314	17	4	537	99 35 031 14	SEILSCHUTZ KPL
GUMMI	289062814	13	0.1	554	11 28 979 0	GITTERROSTTRAEGER
GUMMI	950840114	46	1	582	99 38 329 14	SPITZEN AL KPL
GUMMIMUFFE	10123671	3	1	186	10 14 671 6	OELLEITUNG VORM.
GUMMIMUFFE	10126090	4	1	179	10 14 201 8	KURBELGEHAEUSEENTLUEF
GUMMIMUFFE	10126091	2	1	179	10 14 201 8	KURBELGEHAEUSEENTLUEF
GUMMIMUFFE	10126317	7	1	186	10 14 671 6	OELLEITUNG VORM.
GUMMIMUFFE	10128228	9	4	238	10 14 622 4	TAKTVENTIL
GUMMIMUFFE	10128875	24	1	236	10 14 013 6	ATL-ANBAU
GUMMIMUFFE	10133641	3	1	179	10 14 201 8	KURBELGEHAEUSEENTLUEF
GUMMIMUFFE	9271340	13	1	221	10 14 736 9	ANSAUGSTUTZEN ANBAU
GUMMIRING	10123876	103	2	248	10 15 028 8	KABELBAUM ANBAU
GUMMIRING	10123877	12	2	160	11 24 448 7	ZENTRALAGGREGAT EL
GW-LAGER	990706901	10	1	51	10 51 963 1	OW DREHVERBINDUNG EINBA
HAFTETIKETTE	10518558	1	1	610	10 52 439 2	SCHLAUCHLISTE
HAFTETIKETTE	10518558	2	5	610	10 52 439 2	SCHLAUCHLISTE
HAFTETIKETTE	10518558	1	3	658	99 27 747 14	SCHLAUCHLISTE
HAFTETIKETTE	10518558	1	2	675	10 53 635 2	SCHLAUCHLISTE
HAKENBETRIEB 2 NRS	919276314	598	1	3	01 38 281 14	LR 1300 SX
HALTEBLECH	11236318	11	1	557	11 28 982 7	TRANSPORTSICHERUNG
HALTEBLECH	11241209	10	1	557	11 28 982 7	TRANSPORTSICHERUNG
HALTEBLECH	11243383	10	1	491	11 28 794 6	TRANSPORTSICHERUNG
HALTEBLECH	11285055	11	1	491	11 28 794 6	TRANSPORTSICHERUNG
HALTEKLAMMER OT	725810414	54	2	621	10 55 372 1	DACHGELAENDER NRS
HALTEPLATTE	11259704	200	1	378	59 22 930 14	KLIMAGERAET
HALTEPLATTE	11259705	210	1	378	59 22 930 14	KLIMAGERAET
HALTER	10041876	17	1	226	10 14 286 0	KLIMAKOMPRESSOR ANBAU
HALTER	10041876	21	1	248	10 15 028 8	KABELBAUM ANBAU
HALTER	10132619	17	1	248	10 15 028 8	KABELBAUM ANBAU
HALTER	10133758	14	1	248	10 15 028 8	KABELBAUM ANBAU
HALTER	10136834	16	1	248	10 15 028 8	KABELBAUM ANBAU
HALTER	10138079	3	1	214	10 14 679 7	KRAFTSTOFF-FEINFILTERAN
HALTER	10145373	2	1	238	10 14 622 4	TAKTVENTIL
HALTER	10146836	3	1	238	10 14 622 4	TAKTVENTIL

Bezeichnung	Artikel	Pos.	Menge	Blatt	Baugruppe	Bezeichnung
HALTER	10223693	33	2	282	11 24 409 0	VERKLEIDUNG OW EINBAU KP
HALTER	10224272	61	2	29	11 24 519 0	OW EL
HALTER	10224272	49	3	351	11 27 973 6	KABINE EL
HALTER	10527391	1	1	687	10 57 848 6	MONITOR KABINE ANBAU
HALTER	10556597	12	1	254	11 24 114 0	KUEHLER EINBAU WASSER
HALTER	10575980	30	3	302	11 24 483 7	BEF-TEILE OW
HALTER	10579104	10	1	165	10 51 948 1	ANSAUGROHR OEL
HALTER	10584123	47	1	284	11 24 409 0	VERKLEIDUNG OW EINBAU KP
HALTER	10584124	48	1	284	11 24 409 0	VERKLEIDUNG OW EINBAU KP
HALTER	10591343	54	1	350	11 29 327 3	KABINE KPL
HALTER	11007215	15	1	248	10 15 028 8	KABELBAUM ANBAU
HALTER	11218236	70	1	450	11 23 820 3	ANLENKSTUECK KPL
HALTER	11242757	42	1	275	11 24 114 5	ANLAGE HARNSTOFF EINBAU
HALTER	11250382	3	1	254	11 24 114 0	KUEHLER EINBAU WASSER
HALTER	11251056	8	1	261	11 24 114 1	KUEHLER EINBAU LADELUFT
HALTER	11262894	3	1	383	11 26 095 6	STEUERKONSOLE RE KPL
HALTER	11272006	7	1	604	11 29 444 5	HEIZUNG NRS
HALTER	592290214	81	1	367	10 35 250 8	KABINE
HALTER	592290314	82	1	367	10 35 250 8	KABINE
HALTER	592290414	84	1	367	10 35 250 8	KABINE
HALTER	969641501	50	1	316	96 96 543 01	WINDENRAHMEN
HALTER	992415314	10	1	628	99 24 978 14	AL EL
HALTER ANBAU	10146587	10	1	248	10 15 028 8	KABELBAUM ANBAU
HALTER KAMERA	385137114	13	1	686	10 58 064 7	VIDEOUEBERWACHUNGSANL
HALTER KPL	10584210	49	1	284	11 24 409 0	VERKLEIDUNG OW EINBAU KP
HALTER KPL	11309625	57	1	350	11 29 327 3	KABINE KPL
HALTER SCHWK	10579806	41	1	275	11 24 114 5	ANLAGE HARNSTOFF EINBAU
HALTER SCHWK	11223490	12	1	680	11 22 344 2	KAMERA EINBAU
HALTER SCHWK	11247880	14	1	264	11 24 114 2	ANSAUGANLAGE LUFT
HALTERUNG	10350632	10	1	480	10 35 063 3	HALTERUNG
HALTERUNG	10350633	11	2	478	11 28 594 7	AUFLAGE KPL
HALTERUNG	10350633	11	2	496	11 28 619 1	AUFLAGE KPL
HALTERUNG	10350633	11	2	502	11 28 653 4	AUFLAGE KPL
HALTERUNG	10588168	18	1	58	10 58 163 4	KABINENAUFHAENGUNG KPL
HALTERUNGSSCHELLE	7362546	55	16	275	11 24 114 5	ANLAGE HARNSTOFF EINBAU
HALTERUNGSSCHELLE	7362551	32	1	604	11 29 444 5	HEIZUNG NRS
HALTESEIL	10350539	10	2	643	97 05 997 03	ZWISCHENABSPANNUNG NR
HALTESEIL	774760214	1	6	643	97 05 997 03	ZWISCHENABSPANNUNG NR
HALTESEIL	774760314	4	6	643	97 05 997 03	ZWISCHENABSPANNUNG NR
HALTESEIL	774760414	3	6	643	97 05 997 03	ZWISCHENABSPANNUNG NR
HALTESEIL	774760514	2	8	643	97 05 997 03	ZWISCHENABSPANNUNG NR
HALTESEIL	790538014	9	2	643	97 05 997 03	ZWISCHENABSPANNUNG NR
HALTESTANGE	10226400	10	2	492	99 24 404 14	HALTESTANGE KPL
HALTESTANGE	10226401	10	2	500	99 24 405 14	HALTESTANGE KPL
HALTESTANGE	10226401	10	4	506	99 24 406 14	HALTESTANGE KPL
HALTESTANGE	10336904	10	2	476	99 26 417 14	HALTESTANGE KPL
HALTESTANGE	10336970	10	2	460	99 30 060 14	HALTESTANGE KPL
HALTESTANGE	10337309	10	2	519	99 24 594 14	HALTESTANGE KPL
HALTESTANGE	10349541	11	2	542	10 59 968 1	HALTESTANGE KPL
HALTESTANGE	949910614	4	2	501	91 85 911 14	HALTESTANGE KPL
HALTESTANGE	949910614	4	4	507	99 03 609 14	HALTESTANGE KPL
HALTESTANGE	949910614	10	2	571	99 26 362 14	HALTESTANGE KPL
HALTESTANGE	949910714	4	2	493	91 85 910 14	HALTESTANGE KPL
HALTESTANGE	949910714	11	2	535	99 26 359 14	HALTESTANGE KPL
HALTESTANGE	949910714	11	2	571	99 26 362 14	HALTESTANGE KPL
HALTESTANGE	949912814	10	2	542	10 59 968 1	HALTESTANGE KPL
HALTESTANGE	950735514	36	2	582	99 38 329 14	SPITZEN AL KPL
HALTESTANGE	950735614	38	1	582	99 38 329 14	SPITZEN AL KPL
HALTESTANGE KPL	10599681	12	1	538	11 24 611 6	A-BOCK 3 KPL
HALTESTANGE KPL	918591014	13	1	481	11 24 570 5	ZWISCHENSTUECK MONTAGE

Bezeichnung	Artikel	Pos.	Menge	Blatt	Baugruppe	Bezeichnung
HALTESTANGE KPL	918591014	45	1	525	11 24 336 5	ANLENKSTUECK NADEL KPL
HALTESTANGE KPL	918591014	12	1	551	11 24 084 9	ZWISCHENSTUECK MONTAGE
HALTESTANGE KPL	918591114	13	1	497	11 24 571 1	ZWISCHENSTUECK MONTAGE
HALTESTANGE KPL	918591114	12	1	558	11 24 162 7	ZWISCHENSTUECK MONTAGE
HALTESTANGE KPL	990360914	13	1	503	11 24 571 7	ZWISCHENSTUECK MONTAGE
HALTESTANGE KPL	990360914	12	1	561	11 24 163 1	ZWISCHENSTUECK MONTAGE
HALTESTANGE KPL	992440414	12	1	481	11 24 570 5	ZWISCHENSTUECK MONTAGE
HALTESTANGE KPL	992440514	12	1	497	11 24 571 1	ZWISCHENSTUECK MONTAGE
HALTESTANGE KPL	992440614	12	1	503	11 24 571 7	ZWISCHENSTUECK MONTAGE
HALTESTANGE KPL	992459414	14	1	509	11 24 132 4	AL KOPF KPL
HALTESTANGE KPL	992635914	12	1	531	11 24 475 9	A-BOCK 2 KPL
HALTESTANGE KPL	992636214	13	1	564	11 24 263 6	NADELKOPF KPL
HALTESTANGE KPL	992641714	11	1	471	11 23 937 8	A-BOCK 1 MONTAGEEINHEIT
HALTESTANGE KPL	993006014	57	1	450	11 23 820 3	ANLENKSTUECK KPL
HANDENTLUEFTUNGSPUMPE	10129218	4	1	272	10 55 091 1	KRAFTSTOFFVORFILTER AN
HANDHEBELFETTPRESSE	10445635	13	1	52	11 27 315 5	ZENTRALSCHMIERUNG
HANDHEBELPRESSE 400B	885602114	4	1	444	10 56 183 8	WERKZEUG
HANDKURBEL	616155414	10	1	457	61 61 541 14	KABELTROMMEL
HANDLAUF	10518461	41	1	408	10 55 876 0	RAUPENTRAEGER RE KPL
HANDLAUF	10518461	42	1	417	10 55 876 1	RAUPENTRAEGER LI KPL
HANDLAUF	10523559	11	1	408	10 55 876 0	RAUPENTRAEGER RE KPL
HANDLAUF	10523559	11	1	417	10 55 876 1	RAUPENTRAEGER LI KPL
HANDRAD	5609144	53	1	382	10 28 999 3	SCHWINGSYSTEM
HARNSTOFFBEHAELTER	11242408	6	1	275	11 24 114 5	ANLAGE HARNSTOFF EINBAU
HAUPT EZW HYDR	10519687	2	1	320	10 51 968 6	EZW OW EINBAU KPL
HAUPTDUESE SOLEX 0.8MM	714001914	38	2	8	11 29 618 6	OW HYDR
HAUPTDUESE SOLEX 0.8MM	714001914	5	1	689	10 51 728 1	VERROHRUNG HYDR
HAUPTDUESE SOLEX 1.2MM	714002114	7	1	608	10 51 726 2	VERROHRUNG HYDR
HEBEL	10447749	5	1	25	10 44 510 5	SCHNELLVERSCHLUSSKUPPL
HEBEL	10447749	5	1	400	10 44 510 2	SCHNELLVERSCHLUSSKUPPL
HEBEL	10447749	5	1	401	10 44 510 1	SCHNELLVERSCHLUSSKUPPL
HEBEL SCHWK	992751514	18	2	644	10 51 971 3	SELBSTVERLADESYSTEM NR
HECKSCHEIBE	592289014	48	1	366	10 35 250 8	KABINE
HEIZFLANSCH ANBAU	9078314	260	1	172	10 14 032 7	DIESELMOTOR
HEIZFLANSCH VORM.	10299988	1	1	223	90 78 314	HEIZFLANSCH ANBAU
HEIZUNG NRS	11294445	10	1	601	11 29 551 4	KAELTEPAKET NRS
HELILAMPE EINBAU NRS	11215462	1	1	625	11 21 546 1	HELILEUCHTE NRS
HELILEUCHTE NRS	11215461	566	1	3	01 38 281 14	LR 1300 SX
HILFSSEIL	606655308	2	1	567	92 75 218 08	ENDSCHALTER HUB OBEN
HINDERNISLEUCHTE	10226144	31	2	628	99 24 978 14	AL EL
HITZESCHUTZ MIT BEFEST.	10142591	415	1	172	10 14 032 7	DIESELMOTOR
HOCHDRUCKPUMPE MIT BEFE	10150857	171	1	171	10 14 032 7	DIESELMOTOR
HOHLSCHRAUBE	10151637	2	1	178	10 15 163 4	KOLBENKUEHLUNG VORM.
HOHLSCHRAUBE 10X1 9SMN	9080466	3	5	231	10 14 821 7	ROHRLEITUNG ANBAU
HOHLSCHRAUBE DIN 7643 10X	4079240	17	1	217	10 14 588 5	LECKOELRUECKLAUF
HOHLSCHRAUBE DIN 7643 12X	4980741	13	1	237	10 14 511 2	ABGASSTUTZEN ANBAU
HOHLSCHRAUBE DIN 7643 15	4981226	6	6	216	10 14 333 9	KRAFTSTOFFLEITUNGEN
HOHLSCHRAUBE DIN 7643 15X	10129819	8	1	216	10 14 333 9	KRAFTSTOFFLEITUNGEN
HOHLSCHRAUBE DIN 7643 8X	4980664	10	1	217	10 14 588 5	LECKOELRUECKLAUF
HOHLSCHRAUBE DIN 7643 M1	4079160	5	7	217	10 14 588 5	LECKOELRUECKLAUF
HOHLSCHRAUBE DIN 7643 M1	4079160	8	1	238	10 14 622 4	TAKTVENTIL
HOHLSCHRAUBE R1/2"	10588723	1	1	467	59 20 224 14	LASTHALTEVENTIL
HUBLASCHE KPL	11890636	16	1	650	11 23 619 7	SELBSTVERLADESYSTEM NR
HUELSE	10123532	2	1	193	10 13 728 5	ZYLINDERKOPF
HUELSE	11267440	2	1	89	11 06 730 4	ABSCHALTVENTIL
HUELSE	11267453	3	1	91	11 26 744 7	WECHSELVENTIL
HUELSE	9267340	10	1	98	92 67 343	ENTLUEFTUNGSVENTIL
HUELSE 14/25X26 S235JRH;E	11276612	5	1	261	11 24 114 1	KUEHLER EINBAU LADELUFT
HUELSE 20/13.5X44 AISI 316	10571340	14	2	254	11 24 114 0	KUEHLER EINBAU WASSER
HUELSE 8X0.4	501507314	15	1	614	54 02 702 14	SEILTROMMEL KPL

Bezeichnung	Artikel	Pos.	Menge	Blatt	Baugruppe	Bezeichnung
HUELSE NG32/RD60/23X85	11226016	20	1	346	51 14 347 14	DW SICHERUNGSBLOCK
HUPE	614046114	81	1	351	11 27 973 6	KABINE EL
HYDRAULIKOEL	10520522	10	26	547	10 53 146 1	VERROHRUNG HYDR
INJEKTOR KPL.	10144093	13	1	275	11 24 114 5	ANLAGE HARNSTOFF EINBAU
INJEKTOR MIT BEFEST.	10152867	190	6	171	10 14 032 7	DIESELMOTOR
INNENLAMELLE	501540514	98	7	339	99 04 645 14	ANTRIEB
INNENLEUCHTE	607147008	41	1	351	11 27 973 6	KABINE EL
INNENLEUCHTE	607147008	41	1	354	10 55 963 5	SCHALTSCHR X1
INNENRAD	512406114	11	1	613	54 02 701 14	PLANETENSTUFE
INNENRAD	512406214	21	1	613	54 02 701 14	PLANETENSTUFE
INNENRAD	944378903	60	1	412	96 93 178 01	FAHRANTRIEB
INNENRAD	944403803	10	1	412	96 93 178 01	FAHRANTRIEB
INNENRAD	944406703	65	1	412	96 93 178 01	FAHRANTRIEB
INNENSECHSKANTSCHRAUBE	11250990	420	4	78	11 24 682 0	VERTEILERGETRIEBE
INNENSECHSKANTSCHRAUB	11290853	460	1	78	11 24 682 0	VERTEILERGETRIEBE
INNENSECHSKANTSCHRAUB	11290854	465	1	78	11 24 682 0	VERTEILERGETRIEBE
ISOLIERMATTE	11272566	11	1	604	11 29 444 5	HEIZUNG NRS
ISOLIERSCHLAUCH	603000108	201	1.03	697	10 56 427 9	KABELSTRANG
ISOLIERSCHLAUCH	603000308	86	1.2	566	10 57 624 5	KABELSATZ
ISOLIERSCHLAUCH	603000408	17	2.3	288	11 24 409 1	VERKLEIDUNG
ISOLIERSTUECK	10227563	79	2	354	10 55 963 5	SCHALTSCHR X1
JACK-UP SYSTEM HYDR NRS	11235246	2	1	666	11 89 568 7	SELBSTVERLADESYSTEM NR
JACK-UP SYSTEM HYDR NRS	11894080	2	1	660	11 89 568 5	SELBSTVERLADESYSTEM NR
KABEL	11234650	150	4	352	11 27 973 6	KABINE EL
KABEL	11240499	3	1	684	10 53 352 4	KABINE EL
KABEL	993856014	40	1	566	10 57 624 5	KABELSATZ
KABEL WINDGEBER	918361414	41	1	566	10 57 624 5	KABELSATZ
KABELBAUM	10145895	1	1	248	10 15 028 8	KABELBAUM ANBAU
KABELBAUM	10153986	1	1	171	10 14 032 7	DIESELMOTOR
KABELBAUM ANBAU	10150288	580	1	173	10 14 032 7	DIESELMOTOR
KABELBINDER	11234767	130	30	29	11 24 519 0	OW EL
KABELBINDER	11234767	125	20	276	11 24 114 5	ANLAGE HARNSTOFF EINBAU
KABELDURCHFUEHRUNG KAB	916525114	31	1	351	11 27 973 6	KABINE EL
KABELHALTER NRS	953431703	35	1	633	10 51 176 9	ZWISCHENHUB NADEL AL KP
KABELLEITER SCHWK	11246919	42	1	302	11 24 483 7	BEF-TEILE OW
KABELLEITER SCHWK	11247023	61	1	304	11 24 483 7	BEF-TEILE OW
KABELLEITER SCHWK	11247131	62	1	304	11 24 483 7	BEF-TEILE OW
KABELLEITER SCHWK	11247158	48	1	302	11 24 483 7	BEF-TEILE OW
KABELLEITER SCHWK	11247207	50	1	302	11 24 483 7	BEF-TEILE OW
KABELLEITER SCHWK	11265089	65	1	304	11 24 483 7	BEF-TEILE OW
KABELSATZ	10151665	582	1	173	10 14 032 7	DIESELMOTOR
KABELSATZ	10223208	30	1	378	59 22 930 14	KLIMAGERAET
KABELSATZ	10289980	75	1	692	10 04 363 3	FAHRERSITZ LUFTGEFEDERT
KABELSATZ	10289981	76	1	692	10 04 363 3	FAHRERSITZ LUFTGEFEDERT
KABELSATZ	10575599	21	1	510	10 53 141 3	AL KOPF EL
KABELSATZ	10576212	21	1	526	10 53 140 9	ANLENKSTUECK EL
KABELSATZ	10576245	21	1	565	10 53 141 0	KOPF WIPPSPITZE EL
KABELSATZ	11100081	1	1	249	10 13 555 3	KABELSATZ ANBAU
KABELSATZ 1 ANLENKSTUECK	10572939	21	1	455	10 53 044 6	ANLENKSTUECK EL
KABELSATZ ANBAU	10135553	8	1	248	10 15 028 8	KABELBAUM ANBAU
KABELSATZ ANBAU	10150287	2	1	248	10 15 028 8	KABELBAUM ANBAU
KABELSCHUH	602206114	24	1	34	10 56 645 8	KLEMMKASTEN
KABELSCHUH	602206514	74	2	29	11 24 519 0	OW EL
KABELSTRANG	10226573	3	1	311	10 51 969 7	NADELEINZIEHWINDE
KABELSTRANG	10226574	3	1	606	10 51 743 9	SEILEINZIEHWINDE KPL NRS
KABELSTRANG	10519084	203	1	352	11 27 973 6	KABINE EL
KABELSTRANG	10540846	98	1	352	11 27 973 6	KABINE EL
KABELSTRANG	10564279	11	1	695	99 21 473 14	FAHRERSITZ EL NRS
KABELSTRANG	11239085	11	1	35	11 23 908 2	STEUERPULT
KABELSTRANG	11265111	11	1	456	91 92 528 14	KABELTROMMEL

Bezeichnung	Artikel	Pos.	Menge	Blatt	Baugruppe	Bezeichnung
KABELSTRANG	11266528	11	1	602	11 26 652 6	STANDHEIZUNG EL NRS
KABELSTRANG BETANKUNG	10521560	60	1	715	10 52 155 9	MODUL BETANKUNGSANLAG
KABELSTRANG W 1	11247122	11	1	160	11 24 448 7	ZENTRALAGGREGAT EL
KABELSTRANG W 10	10559638	25	1	354	10 55 963 5	SCHALTSCHR X1
KABELSTRANG W 19	10519082	201	1	352	11 27 973 6	KABINE EL
KABELSTRANG W 2	11247121	11	1	28	11 24 519 0	OW EL
KABELSTRANG W 20	11261603	202	1	352	11 27 973 6	KABINE EL
KABELSTRANG W 22	10519085	204	1	352	11 27 973 6	KABINE EL
KABELSTRANG W 3	10563643	13	1	28	11 24 519 0	OW EL
KABELSTRANG W 40	10563800	41	1	474	10 53 120 7	A-BOCK EL
KABELSTRANG W 40	11314473	50	1	474	10 53 120 7	A-BOCK EL
KABELSTRUMPF	602707214	90	1	443	10 56 187 5	WERKZEUGAUSRUESTUNG
KABELSTRUMPF	602707414	91	1	443	10 56 187 5	WERKZEUGAUSRUESTUNG
KABELTROMMEL	616154114	21	1	456	91 92 528 14	KABELTROMMEL
KABELTROMMEL	919252814	31	1	455	10 53 044 6	ANLENKSTUECK EL
KABELTROMMEL	919252814	31	1	526	10 53 140 9	ANLENKSTUECK EL
KABELVERSCHRAUBUNG	10045155	21	5	566	10 57 624 5	KABELSATZ
KABELVERSCHRAUBUNG	10045155	34	1	578	97 14 959 03	SPITZENENDSCHALTER EL
KABELVERSCHRAUBUNG	10045155	34	1	583	91 95 871 14	SPITZENENDSCHALTER EL
KABELVERSCHRAUBUNG	10045155	34	1	634	10 51 167 1	ENDSCHALTER EL
KABELVERSCHRAUBUNG	602440101	37	2	628	99 24 978 14	AL EL
KABELVERSCHRAUBUNG	693148214	55	1	715	10 52 155 9	MODUL BETANKUNGSANLAG
KABINE	10352508	10	1	350	11 29 327 3	KABINE KPL
KABINE EL	10533524	50	1	683	10 53 246 1	KAMERAUEBERWACHUNG
KABINE EL	11279736	3	1	350	11 29 327 3	KABINE KPL
KABINE KPL	11293273	30	1	2	01 38 281 14	LR 1300 SX
KABINE REST EL	11215302	50	1	627	11 21 529 8	WARNLICHT EL NRS
KABINENAUFHAENGUNG KPL	10581634	35	1	6	11 24 047 9	OW KPL
KABINENNEIGUNG EL NRS	10531224	3	1	688	10 51 728 0	KABINENNEIGUNG NRS
KABINENNEIGUNG NRS	10517280	719	1	4	01 38 281 14	LR 1300 SX
KAEFIGMUTTER M10-R-140-32	413003308	80	32	280	11 24 114 6	ABDECKUNG
KAEFIGMUTTER M10-R-140-32	413003308	38	18	300	11 24 922 2	ABDECKUNG UNTERSEITE
KAEFIGMUTTER M10-R-140-47	413003508	82	10	280	11 24 114 6	ABDECKUNG
KAEFIGMUTTER M10-R-140-47	413003508	58	4	284	11 24 409 0	VERKLEIDUNG OW EINBAU KP
KAEFIGMUTTER M10-R-140-62	413013314	81	8	280	11 24 114 6	ABDECKUNG
KAEFIGMUTTER M10-R-140-62	413013314	13	24	298	10 54 591 0	MOTORABDECKUNG
KAEFIGMUTTER M10-RR-140-4	485549914	21	2	41	10 51 961 6	OELKUEHLER EINBAU
KAEFIGMUTTER M10-RR-140-4	485549914	2	8	62	10 56 069 4	MODULE EINBAU
KAEFIGMUTTER M10-RR-140-4	485549914	32	53	300	11 24 922 2	ABDECKUNG UNTERSEITE
KAEFIGMUTTER M10-RR-140-6	485550014	19	4	60	10 56 067 3	BATTERIE EINBAU KPL
KAEFIGMUTTER M10-RR-140-6	485550014	29	21	282	11 24 409 0	VERKLEIDUNG OW EINBAU KP
KAEFIGMUTTER M10-RR-140-6	485550014	25	2	300	11 24 922 2	ABDECKUNG UNTERSEITE
KAEFIGMUTTER M8-R-123-47 S	413003208	9	2	698	11 22 037 2	FUSSPEDAL EL EINBAU
KAEFIGMUTTER M8-RR-123-4	485550114	61	5	284	11 24 409 0	VERKLEIDUNG OW EINBAU KP
KAEFIGMUTTER M8-RR-123-4	485550114	4	4	332	99 29 389 14	SEITENTEIL
KAEFIGMUTTER M8-RR-123-4	485550114	4	4	333	99 29 392 14	SEITENTEIL
KAEFIGMUTTER M8-RR-123-4	485550114	16	2	335	99 29 386 14	KONSOLE KPL
KAEFIGMUTTER M8-RR-123-4	485550114	16	2	336	99 29 434 14	KONSOLE KPL
KAEFIGMUTTER M8-RR-123-4	485550114	30	3	350	11 29 327 3	KABINE KPL
KAEFIGMUTTER M8-RR-123-4	485550114	82	1	604	11 29 444 5	HEIZUNG NRS
KAEFIGMUTTER M8-RR-123-4	485550114	43	2	621	10 55 372 1	DACHGELAENDER NRS
KAELTEPAKET NRS	11295514	514	1	3	01 38 281 14	LR 1300 SX
KAMERA CCD	10024012	31	1	681	10 50 775 0	KAMERAUEBERWACHUNG
KAMERA CCD	10024012	31	1	683	10 53 246 1	KAMERAUEBERWACHUNG
KAMERA EINBAU	11223442	1	1	678	11 21 990 7	VIDEOUEBERWACHUNGSANL
KAMERAUEBERWACHUNG	10507750	3	1	678	11 21 990 7	VIDEOUEBERWACHUNGSANL
KAMERAUEBERWACHUNG	10507750	8	1	682	11 89 400 8	VIDEOUEBERWACHUNGSANL
KAMERAUEBERWACHUNG	10532461	7	1	682	11 89 400 8	VIDEOUEBERWACHUNGSANL
KAMERAUEBERWACHUNG	11893352	3	1	682	11 89 400 8	VIDEOUEBERWACHUNGSANL
KANTENSCHUTZ FLEXIBEL	10352462	17	0.422	485	11 28 390 8	AL BEGEHUNG

Bezeichnung	Artikel	Pos.	Menge	Blatt	Baugruppe	Bezeichnung
KANTENSCHUTZ FLEXIBEL	10352462	17	0.422	499	11 28 583 8	AL BEGEHUNG
KANTENSCHUTZ FLEXIBEL	10352462	17	0.422	505	11 28 626 1	AL BEGEHUNG
KANTENSCHUTZ FLEXIBEL	262103101	16	0.16	480	10 35 063 3	HALTERUNG
KANTENSCHUTZ FLEXIBEL	262103101	62	0.92	525	11 24 336 5	ANLENKSTUECK NADEL KPL
KANTENSCHUTZ FLEXIBEL	262103101	13	0.93	552	11 24 084 8	AL ZWISCHENSTUECK KPL
KANTENSCHUTZ FLEXIBEL	262103101	13	0.93	559	11 24 162 5	AL ZWISCHENSTUECK KPL
KANTENSCHUTZ FLEXIBEL	262103101	13	0.93	562	11 24 163 0	AL ZWISCHENSTUECK KPL
KANTENSCHUTZ FLEXIBEL	262105314	14	9	288	11 24 409 1	VERKLEIDUNG
KANTENSCHUTZ FLEXIBEL	262105314	2	1.1	290	10 57 883 5	TUER
KANTENSCHUTZ METERWAR	226016702	29	2.18	300	11 24 922 2	ABDECKUNG UNTERSEITE
KANTENSCHUTZ METERWAR	226016702	30	1.11	300	11 24 922 2	ABDECKUNG UNTERSEITE
KANTENSCHUTZ METERWAR	226016702	31	1.19	300	11 24 922 2	ABDECKUNG UNTERSEITE
KANTENSCHUTZ METERWAR	226016702	33	1.24	300	11 24 922 2	ABDECKUNG UNTERSEITE
KANTENSCHUTZ METERWAR	226016702	34	1.29	300	11 24 922 2	ABDECKUNG UNTERSEITE
KANTENSCHUTZ METERWAR	226016702	35	0.57	300	11 24 922 2	ABDECKUNG UNTERSEITE
KANTENSCHUTZ METERWAR	226016702	36	0.85	300	11 24 922 2	ABDECKUNG UNTERSEITE
KANTENSCHUTZ METERWAR	226016702	37	1.2	300	11 24 922 2	ABDECKUNG UNTERSEITE
KANTENSCHUTZ METERWAR	226016702	39	0.36	300	11 24 922 2	ABDECKUNG UNTERSEITE
KANTENSCHUTZ METERWAR	226016702	40	0.35	300	11 24 922 2	ABDECKUNG UNTERSEITE
KANTENSCHUTZ METERWAR	226016702	22	0.45	456	91 92 528 14	KABELTROMMEL
KANTENSCHUTZ METERWAR	226017802	76	4	451	11 23 820 3	ANLENKSTUECK KPL
KANTENSCHUTZ METERWAR	226017802	13	1.132	482	11 24 570 3	AL ZWISCHENSTUECK KPL
KANTENSCHUTZ METERWAR	226017802	13	1.132	498	11 24 570 9	AL ZWISCHENSTUECK KPL
KANTENSCHUTZ METERWAR	226017802	13	1.132	504	11 24 571 5	AL ZWISCHENSTUECK KPL
KAPPE	11239908	7	1	657	59 21 584 14	SENKBREMSVENTIL
KARABINERHAKEN	744010414	5	2	415	99 08 357 14	ANHAENGEKETTE
KARABINERHAKEN	744011114	12	5	286	11 24 409 1	VERKLEIDUNG
KBA-RING	10143512	3	1	190	10 14 351 1	KOLBEN KPL.
KEGELROLLENLAGER	10355730	15	1	154	11 21 593 6	PUMPENELEMENT
KEGELROLLENLAGER	10355731	16	1	154	11 21 593 6	PUMPENELEMENT
KEGELROLLENLAGER	746225801	4	1	412	96 93 178 01	FAHRANTRIEB
KEGELROLLENLAGER	761008703	3	1	412	96 93 178 01	FAHRANTRIEB
KEGELSCHMIERNIPPEL	7001228	18	2	64	10 51 969 4	A-BOCK AUFRICHTZYL EINBA
KEGELSCHMIERNIPPEL	774301614	44	2	633	10 51 176 9	ZWISCHENHUB NADEL AL KP
KEGELSCHMIERNIPPEL	7743240	65	1	612	59 20 694 14	WINDE
KEGELSCHMIERNIPPEL	7743242	5	2	63	99 23 451 14	ANLENKBOLZEN EINBAU
KEGELSCHMIERNIPPEL	7743242	16	2	473	11 24 444 4	A-BOCK 1 KPL
KEGELSCHMIERNIPPEL	7743242	12	1	527	11 29 648 5	BOLZEN KPL
KEGELSCHMIERNIPPEL	7743242	12	2	529	11 29 649 2	BOLZEN KPL
KEGELSCHMIERNIPPEL	7743242	19	1	582	99 38 329 14	SPITZEN AL KPL
KEGELSCHMIERNIPPEL	7743242	16	4	665	11 89 568 6	SELBSTVERLADESYSTEM NR
KEGELSTOPFEN	779006901	85	1	412	96 93 178 01	FAHRANTRIEB
KEILRIPPENRIEMEN	11482412	7	1	226	10 14 286 0	KLIMAKOMPRESSOR ANBAU
KETTE	740000208	20	3	522	99 30 800 14	SPITZENENDSCHALTER EINBA
KETTE	740000208	20	1	570	11 28 774 6	MONTAGETEILE
KETTE	740000908	4	0.624	415	99 08 357 14	ANHAENGEKETTE
KETTE KPL	10350940	22	4	644	10 51 971 3	SELBSTVERLADESYSTEM NR
KETTENSCHLOSS	773947708	21	2	570	11 28 774 6	MONTAGETEILE
KETTENVERBINDUNGSSCHL	773967214	2	4	415	99 08 357 14	ANHAENGEKETTE
KFZ-LEITUNG	10870540	251	10.7	34	10 56 645 8	KLEMMKASTEN
KFZ-LEITUNG	10870540	251	3.42	697	10 56 427 9	KABELSTRANG
KIPPHEBELBOCK KPL.	10148438	81	6	171	10 14 032 7	DIESELMOTOR
KIPPHEBELBOCK VORM.	10142641	1	1	194	10 14 843 8	KIPPHEBELBOCK KPL.
KLAPPE KPL	10352672	57	1	366	10 35 250 8	KABINE
KLAPPKONSOLE	10564433	10	4	665	11 89 568 6	SELBSTVERLADESYSTEM NR
KLAPPSTECKER DIN 11023 6	433200208	46	2	633	10 51 176 9	ZWISCHENHUB NADEL AL KP
KLEBSTOFF	811208201	118	1	129	10 14 131 6	ANSCHLUSSPLATTE VORM.
KLEBSTOFF	8655023	118	1	97	10 11 835 0	ANSCHLUSSGEHAEUSE
KLEBSTOFF	8655023	104	1	174	10 15 438 6	KURBELGEHAEUSE KPL.
KLEBSTOFF	8655023	104	1	193	10 13 728 5	ZYLINDERKOPF

Bezeichnung	Artikel	Pos.	Menge	Blatt	Baugruppe	Bezeichnung
KLEBSTOFF	8655032	119	1	99	10 11 835 7	RS ANSCHLUSSGEHAEUSE
KLEMMBUEGEL	10509133	3	2	60	10 56 067 3	BATTERIE EINBAU KPL
KLEMMDOSE	10576251	20	1	566	10 57 624 5	KABELSATZ
KLEMMHAELFTE	602008508	57	6	254	11 24 114 0	KUEHLER EINBAU WASSER
KLEMMHAELFTE	602008808	38	4	419	11 23 548 1	MITTELTEIL KPL
KLEMMHAELFTE	602010114	36	8	419	11 23 548 1	MITTELTEIL KPL
KLEMMHAELFTE	602017114	72	4	450	11 23 820 3	ANLENKSTUECK KPL
KLEMMHAELFTE	602017114	19	4	485	11 28 390 8	AL BEGEHUNG
KLEMMHAELFTE	602017114	19	4	499	11 28 583 8	AL BEGEHUNG
KLEMMHAELFTE	602017114	19	4	505	11 28 626 1	AL BEGEHUNG
KLEMMHAELFTE	7365090	56	6	254	11 24 114 0	KUEHLER EINBAU WASSER
KLEMMHAELFTE	7404678	37	4	419	11 23 548 1	MITTELTEIL KPL
KLEMMHAELFTE	7413103	38	12	408	10 55 876 0	RAUPENTRAEGER RE KPL
KLEMMHAELFTE	7413103	38	12	417	10 55 876 1	RAUPENTRAEGER LI KPL
KLEMMHALTER B30	10537558	1	1	385	10 53 756 0	LEUCHTENHALTER KPL
KLEMMHEBEL	10555411	9	1	385	10 53 756 0	LEUCHTENHALTER KPL
KLEMMKASTEN	10566458	103	1	29	11 24 519 0	OW EL
KLEMMPROFIL	7014524	42	5	254	11 24 114 0	KUEHLER EINBAU WASSER
KLEMMPROFIL	7014524	30	4.5	280	11 24 114 6	ABDECKUNG
KLEMMRING	979896808	30	2	268	11 24 114 3	ABGASANLAGE
KLIMAANLAGE NRS	11231891	724	1	4	01 38 281 14	LR 1300 SX
KLIMAGERAET	592293014	124	1	367	10 35 250 8	KABINE
KLIMAKOMPRESSOR	10116767	1	1	226	10 14 286 0	KLIMAKOMPRESSOR ANBAU
KLIMAKOMPRESSOR ANBAU	10142860	340	1	172	10 14 032 7	DIESELMOTOR
KNEBEL	956049414	21	4	637	99 10 116 14	SEILFUEHRUNG
KNOPF	10289975	43	4	380	10 22 506 8	FAHRERSITZ
KNOPF	10504994	9	1	677	11 23 623 3	TASCHENSCHLOSS
KNOTENKETTE	740000801	16	2.3	288	11 24 409 1	VERKLEIDUNG
KOLBEN	10129500	1	1	201	10 12 949 9	ENDREGELVENTIL
KOLBEN	10143510	1	1	190	10 14 351 1	KOLBEN KPL.
KOLBEN	10149655	1	1	176	10 13 845 0	ENDREGELVENTIL
KOLBEN	11226017	30	1	346	51 14 347 14	DW SICHERUNGSBLOCK
KOLBEN	9886591	6	1	200	10 12 948 0	OELKUEHLER VORM.
KOLBEN DS	10352353	80	1	669	59 21 826 14	ABSTUETZZYL
KOLBEN DS	10352357	115	1	669	59 21 826 14	ABSTUETZZYL
KOLBEN KPL.	10143511	70	6	171	10 14 032 7	DIESELMOTOR
KOLBENBOLZEN 16MNCR5	10282849	6	1	190	10 14 351 1	KOLBEN KPL.
KOLBENKUEHLDUESE	10151636	1	1	178	10 15 163 4	KOLBENKUEHLUNG VORM.
KOLBENKUEHLUNG	10142749	15	6	171	10 14 032 7	DIESELMOTOR
KOLBENKUEHLUNG VORM.	10151634	1	1	177	10 14 274 9	KOLBENKUEHLUNG
KOLBENSPEICHER	592128514	8	1	547	10 53 146 1	VERROHRUNG HYDR
KOLBENSTANGE	11897433	5	1	548	59 21 280 14	EINFACHWIRKZYL
KOMPENSATOR	10141520	5	2	235	10 14 144 3	ABGASROHR VORM.
KOMPENSATOR	10149145	2	1	237	10 14 511 2	ABGASSTUTZEN ANBAU
KOMPRESSOR	11374417	4	1	275	11 24 114 5	ANLAGE HARNSTOFF EINBAU
KOMPRESSOR	7415342	54	1	694	10 28 999 2	SCHWINGSYSTEM
KONSOLE	10552306	1	1	50	10 55 268 1	MITNEHMER EINBAU
KONSOLE	10579755	3	2	164	11 24 113 8	MOTORLAGER KPL
KONSOLE	10579779	5	1	164	11 24 113 8	MOTORLAGER KPL
KONSOLE	10579979	7	1	60	10 56 067 3	BATTERIE EINBAU KPL
KONSOLE	11215384	6	1	164	11 24 113 8	MOTORLAGER KPL
KONSOLE	11215385	13	1	264	11 24 114 2	ANSAUGANLAGE LUFT
KONSOLE	11247208	12	1	264	11 24 114 2	ANSAUGANLAGE LUFT
KONSOLE	11247464	9	1	268	11 24 114 3	ABGASANLAGE
KONSOLE	11247607	8	1	268	11 24 114 3	ABGASANLAGE
KONSOLE	11249800	2	2	164	11 24 113 8	MOTORLAGER KPL
KONSOLE	11249889	9	2	164	11 24 113 8	MOTORLAGER KPL
KONSOLE	11250222	4	2	164	11 24 113 8	MOTORLAGER KPL
KONSOLE	11263501	17	1	164	11 24 113 8	MOTORLAGER KPL
KONSOLE	918585114	22	2	58	10 58 163 4	KABINENAUFHAENGUNG KPL

Bezeichnung	Artikel	Pos.	Menge	Blatt	Baugruppe	Bezeichnung
KONSOLE	954485303	64	1	304	11 24 483 7	BEF-TEILE OW
KONSOLE	992757514	11	4	308	10 52 656 0	MONTAGETEILE
KONSOLE HINTEN	11262893	1	1	383	11 26 095 6	STEUERKONSOLE RE KPL
KONSOLE KPL	992938614	4	1	331	99 33 537 14	SEILSCHUTZ EZW KPL
KONSOLE KPL	992943414	5	1	331	99 33 537 14	SEILSCHUTZ EZW KPL
KONSOLE SCHWK	10551670	33	2	577	99 48 521 14	SPITZEN AL KPL
KONSOLE SCHWK	11245759	2	2	623	11 24 147 8	UW PODEST
KONSOLE SCHWK	11245922	3	2	623	11 24 147 8	UW PODEST
KONTAKTBUCHSE	605601801	427	24	34	10 56 645 8	KLEMMKASTEN
KONTAKTBUCHSE	605610301	426	24	34	10 56 645 8	KLEMMKASTEN
KONTAKTSTIFT	605601701	32	6	578	97 14 959 03	SPITZENENDSCHALTER EL
KONTAKTSTIFT	605601701	32	8	583	91 95 871 14	SPITZENENDSCHALTER EL
KONTAKTSTIFT	605601701	32	8	634	10 51 167 1	ENDSCHALTER EL
KONTAKTVERRIEGELUNG	693013414	12	1	712	10 52 957 6	BETANKUNGSPUMPE KPL
KONTAKTVERRIEGELUNG	7368242	52	3	351	11 27 973 6	KABINE EL
KONTAKTVERRIEGELUNG	7368248	94	1	352	11 27 973 6	KABINE EL
KONTROLLLEUCHTE	11258086	41	1	28	11 24 519 0	OW EL
KONUSLAGER	746923314	21	2	164	11 24 113 8	MOTORLAGER KPL
KOPF WIPPSPITZE EL	10531410	3	1	564	11 24 263 6	NADELKOPF KPL
KOPFSTUETZE	7370221	1	1	692	10 04 363 3	FAHRERSITZ LUFTGEFEDERT
KOPFSTUETZE	737022103	12	1	350	11 29 327 3	KABINE KPL
KOPPELLASCHE	10226402	11	4	460	99 30 060 14	HALTESTANGE KPL
KOPPELLASCHE	10226402	11	4	492	99 24 404 14	HALTESTANGE KPL
KOPPELLASCHE	10226402	11	4	500	99 24 405 14	HALTESTANGE KPL
KOPPELLASCHE	10226402	11	8	506	99 24 406 14	HALTESTANGE KPL
KOPPELLASCHE	10226402	18	4	519	99 24 594 14	HALTESTANGE KPL
KOPPELLASCHE	10336761	11	8	476	99 26 417 14	HALTESTANGE KPL
KOPPELLASCHE	10348662	12	4	633	10 51 176 9	ZWISCHENHUB NADEL AL KP
KOPPELLASCHE	10348694	11	4	519	99 24 594 14	HALTESTANGE KPL
KOPPELLASCHE	949911014	5	4	493	91 85 910 14	HALTESTANGE KPL
KOPPELLASCHE	949911014	7	4	512	11 28 629 9	MONTAGETEILE
KOPPELLASCHE	949911014	15	8	535	99 26 359 14	HALTESTANGE KPL
KOPPELLASCHE	949911014	12	4	571	99 26 362 14	HALTESTANGE KPL
KOPPELLASCHE	950113314	16	2	535	99 26 359 14	HALTESTANGE KPL
KOPPELLASCHE	950275414	13	4	571	99 26 362 14	HALTESTANGE KPL
KOPPELLASCHE	950361114	14	4	542	10 59 968 1	HALTESTANGE KPL
KOPPELLASCHE	956814114	13	4	542	10 59 968 1	HALTESTANGE KPL
KOPPELLASCHE	958145214	5	4	501	91 85 911 14	HALTESTANGE KPL
KOPPELLASCHE	958145214	5	8	507	99 03 609 14	HALTESTANGE KPL
KOPPELLASCHE	958281314	14	4	535	99 26 359 14	HALTESTANGE KPL
KOPPELLASCHE	958281314	19	4	571	99 26 362 14	HALTESTANGE KPL
KRAFTMESSACHSE	11261289	1	2	468	11 29 259 6	KRAFTMESSACHSE EL
KRAFTMESSACHSE EL	11292596	3	1	462	11 29 259 8	RUECKFALLSTUETZE
KRAFTMESSLASCHE	10525837	1	2	539	11 31 381 7	A-BOCK EL
KRAFTMESSLASCHE	10530243	31	2	474	10 53 120 7	A-BOCK EL
KRAFTSTOFF-FEINFILTERAN	10146797	201	1	172	10 14 032 7	DIESELMOTOR
KRAFTSTOFFANLAGE	11241144	50	1	73	11 24 048 0	ZENTRALAGGREGAT
KRAFTSTOFFFEINFILTER	10146753	1	1	214	10 14 679 7	KRAFTSTOFF-FEINFILTERAN
KRAFTSTOFFFEINFILTER	10429946	2	2	215	10 14 675 3	KRAFTSTOFFFEINFILTER
KRAFTSTOFFLEITUNG	9076621	4	1	217	10 14 588 5	LECKOELRUECKLAUF
KRAFTSTOFFLEITUNGEN	10143339	212	1	172	10 14 032 7	DIESELMOTOR
KRAFTSTOFFSCHLAUCH	553128608	70	1.5	275	11 24 114 5	ANLAGE HARNSTOFF EINBAU
KRAFTSTOFFSCHLAUCH	553191108	20	2	604	11 29 444 5	HEIZUNG NRS
KRAFTSTOFFTANK EINBAU	10560732	16	1	6	11 24 047 9	OW KPL
KRAFTSTOFFTANK KPL	10560733	10	1	47	10 56 073 2	KRAFTSTOFFTANK EINBAU
KRAFTSTOFFTANK SCHWK	10560734	10	1	48	10 56 073 3	KRAFTSTOFFTANK KPL
KRAFTSTOFFVORFILTER	10303007	1	1	272	10 55 091 1	KRAFTSTOFFVORFILTER AN
KRAFTSTOFFVORFILTER AN	10550911	10	1	270	11 24 114 4	KRAFTSTOFFANLAGE
KREUZLASCHE	956507814	10	1	676	11 23 626 6	SEILHALTERUNG NRS
KRONENMUTTER DIN 937 M48	411805514	57	2	533	11 29 426 7	MONTAGETEILE

Bezeichnung	Artikel	Pos.	Menge	Blatt	Baugruppe	Bezeichnung
KRUEMMER	10153669	1	1	232	10 14 274 2	KUEHLMITTELKRUEMMER AN
KRUEMMER	11246836	15	1	264	11 24 114 2	ANSAUGANLAGE LUFT
KRUEMMER	550900914	16	1	264	11 24 114 2	ANSAUGANLAGE LUFT
KUEHLER	11267560	29	1	257	10 57 423 7	KUEHLER MOTOR
KUEHLER EINBAU LADELUFT	11241141	29	1	73	11 24 048 0	ZENTRALAGGREGAT
KUEHLER EINBAU WASSER	11241140	28	1	73	11 24 048 0	ZENTRALAGGREGAT
KUEHLER MOTOR	10225925	21	1	8	11 29 618 6	OW HYDR
KUEHLER MOTOR	10574237	10	1	254	11 24 114 0	KUEHLER EINBAU WASSER
KUEHLER MOTOR	10574239	1	1	261	11 24 114 1	KUEHLER EINBAU LADELUFT
KUEHLMITTEL	553078814	15	2.2	699	11 23 189 1	KLIMAANLAGE NRS
KUEHLMITTELKRUEMMER AN	10142742	382	1	172	10 14 032 7	DIESELMOTOR
KUEHLWASSERENTLUEFTUN	10142744	387	1	172	10 14 032 7	DIESELMOTOR
KUEHLWASSERROHR	11250555	20	1	254	11 24 114 0	KUEHLER EINBAU WASSER
KUEHLWASSERROHR	11250556	21	1	254	11 24 114 0	KUEHLER EINBAU WASSER
KUEHLWASSERROHR	11269259	19	1	254	11 24 114 0	KUEHLER EINBAU WASSER
KUEHLWASSERROHR	11287692	18	1	254	11 24 114 0	KUEHLER EINBAU WASSER
KUEHLWASSERSCHLAUCH	11621769	49	1	254	11 24 114 0	KUEHLER EINBAU WASSER
KUEHLWASSERSCHLAUCH	11621769	50	1	254	11 24 114 0	KUEHLER EINBAU WASSER
KUEHLWASSERSCHLAUCH	11621769	5	0.5	270	11 24 114 4	KRAFTSTOFFANLAGE
KUEHLWASSERSCHLAUCH	11621769	61	6.5	275	11 24 114 5	ANLAGE HARNSTOFF EINBAU
KUEHLWASSERSCHLAUCH	11621772	51	1	254	11 24 114 0	KUEHLER EINBAU WASSER
KUEHLWASSERSCHLAUCH	11621772	62	2	275	11 24 114 5	ANLAGE HARNSTOFF EINBAU
KUEHLWASSERSCHLAUCH	11621772	24	5	604	11 29 444 5	HEIZUNG NRS
KUEHLWASSERSCHLAUCH	11621777	48	1	254	11 24 114 0	KUEHLER EINBAU WASSER
KUEHLWASSERSCHLAUCH	11621783	2	21.55	39	99 14 627 14	WARMWASSERHEIZUNG OW
KUEHLWASSERSCHLAUCH	11656331	47	1	254	11 24 114 0	KUEHLER EINBAU WASSER
KUGEL	4901195	13	1	98	92 67 343	ENTLUEFTUNGSVENTIL
KUGELGELENK	10286648	4	1	684	10 53 352 4	KABINE EL
KUGELGELENK	10505322	2	1	466	10 09 917 3	DOPPELWIRKZYL
KUGELHAHN	11270955	17	1	604	11 29 444 5	HEIZUNG NRS
KUGELHAHN	510682014	39	1	8	11 29 618 6	OW HYDR
KUGELHAHN	510682014	1	1	445	91 90 239 14	LEITUNG HYDR
KUGELSCHEIBE DIN 6319	11622278	3	1	208	10 15 315 1	DRUCKROHRSTUTZEN
KUGELSCHEIBE DIN 6319	11622278	2	1	213	10 13 543 4	BEFESTIGUNG DRUCKROHR
KUGELSCHEIBE DIN 6319 8.4X	10036473	4	1	207	10 15 286 7	INJEKTOR MIT BEFEST.
KUGELSCHEIBE DIN 6319 8.4X	10036473	2	1	209	10 14 114 0	RS DRUCKROHRSTUTZEN
KUGELSCHEIBE DIN 6319 8.4X	10036473	3	1	212	10 13 543 2	BEFESTIGUNG INJEKTOR
KUGELZAPFEN	592288314	33	1	366	10 35 250 8	KABINE
KUGELZAPFEN	592288314	12	1	373	59 22 871 14	FRONTSCHEIBE KPL
KUPFERPASTE	10002552	132	1	236	10 14 013 6	ATL-ANBAU
KUPPLUNG	10348619	20	1	706	10 52 293 0	DW GEBER NRS
KUPPLUNG	11249334	2	1	169	11 24 113 9	MOTORVORMONTAGE
KUPPLUNG KPL	10115770	1	1	227	10 11 676 7	KLIMAKOMPRESSOR
KUPPLUNGSDOSE	605612214	42	1	708	10 56 013 7	FREMDEINSPEISUNG BATTERI
KUPPLUNGSHUELSE	10117768	11	1	140	10 13 452 1	DURCHTRIEB
KUPPLUNGSHUELSE	10129873	11	1	137	10 12 987 4	DURCHTRIEB
KUPPLUNGSHUELSE	10130007	11	1	138	10 13 000 5	DURCHTRIEB
KUPPLUNGSHUELSE	10132360	11	1	139	10 13 235 7	ANBAUSATZ DURCHTRIEB
KUPPLUNGSHUELSE	10138069	11	1	141	10 13 806 8	ANBAUSATZ DURCHTRIEB
KUPPLUNGSHUELSE	9073827	15	1	99	10 11 835 7	RS ANSCHLUSSGEHAEUSE
KUPPLUNGSSTUECK	10594064	13	1	75	11 24 773 5	AGGREGAT HYDR
KUPPLUNGSSTUECK	11290850	200	2	78	11 24 682 0	VERTEILERGETRIEBE
KURBELGEHAEUSE KPL.	10154386	10	1	171	10 14 032 7	DIESELMOTOR
KURBELGEHAEUSE VORM.	10154385	1	1	174	10 15 438 6	KURBELGEHAEUSE KPL.
KURBELGEHAEUSEENTLUEF	10142018	16	1	171	10 14 032 7	DIESELMOTOR
KURBELGEHAEUSEENTLUEFT	10136800	1	1	179	10 14 201 8	KURBELGEHAEUSEENTLUEF
KURBELWELLE MIT ZAHNRAD	10147437	50	1	171	10 14 032 7	DIESELMOTOR
KURBELWELLENANBAUTEILE	10141983	53	1	171	10 14 032 7	DIESELMOTOR
KURBELWELLENLAGERSATZ	10147362	51	1	171	10 14 032 7	DIESELMOTOR
L-PROFIL	10581992	51	2	450	11 23 820 3	ANLENKSTUECK KPL

Bezeichnung	Artikel	Pos.	Menge	Blatt	Baugruppe	Bezeichnung
L-RING JL50X2	429612001	57	1	412	96 93 178 01	FAHRANTRIEB
LACKSPRAY	890045314	16	1	444	10 56 183 8	WERKZEUG
LACKSPRAY	890063714	17	1	444	10 56 183 8	WERKZEUG
LADEGERAET	10567084	31	1	708	10 56 013 7	FREMDEINSPEISUNG BATTERI
LADELUFTROHR	10562107	28	1	261	11 24 114 1	KUEHLER EINBAU LADELUFT
LADELUFTROHR	11250430	20	1	261	11 24 114 1	KUEHLER EINBAU LADELUFT
LADELUFTROHR	11250438	21	1	261	11 24 114 1	KUEHLER EINBAU LADELUFT
LADELUFTROHR	11250439	25	1	261	11 24 114 1	KUEHLER EINBAU LADELUFT
LADELUFTWELLSCHLAUCH	10521397	35	4	261	11 24 114 1	KUEHLER EINBAU LADELUFT
LAGER	11278605	10	1	614	54 02 702 14	SEILTROMMEL KPL
LAGER	7025010	59	1	694	10 28 999 2	SCHWINGSYSTEM
LAGER GUMMI	726611214	18	4	422	99 26 718 14	PODEST
LAGER GUMMI	726612114	50	4	261	11 24 114 1	KUEHLER EINBAU LADELUFT
LAGER GUMMI	726612214	88	4	451	11 23 820 3	ANLENKSTUECK KPL
LAGER GUMMI	726612214	13	1	487	11 28 397 7	AUFFANGWANNE KPL
LAGER GUMMI	726612214	13	1	488	11 28 397 8	AUFFANGWANNE KPL
LAGER GUMMI	726612214	13	1	489	11 28 399 5	AUFFANGWANNE KPL
LAGER GUMMI	726612214	13	1	490	11 28 399 7	AUFFANGWANNE KPL
LAGER GUMMI	726613014	20	1	515	10 59 863 3	PENDEL KPL
LAGER GUMMI	726613614	30	4	254	11 24 114 0	KUEHLER EINBAU WASSER
LAGER GUMMI	726616208	23	2	570	11 28 774 6	MONTAGETEILE
LAGER GUMMI	726616208	55	2	621	10 55 372 1	DACHGELAENDER NRS
LAGER GUMMI	726616614	58	10	621	10 55 372 1	DACHGELAENDER NRS
LAGER GUMMI	726902614	21	4	290	10 57 883 5	TUER
LAGER GUMMI	726904014	37	1	58	10 58 163 4	KABINENAUFHAENGUNG KPL
LAGER GUMMI	726910114	19	3	58	10 58 163 4	KABINENAUFHAENGUNG KPL
LAGER GUMMI	726922114	37	2	577	99 48 521 14	SPITZEN AL KPL
LAGER GUMMI	726922214	13	4	41	10 51 961 6	OELKUEHLER EINBAU
LAGERBUCHSE	10121971	2	4	204	10 13 382 3	ABSAUGPUMPE VORM.
LAGERDECKEL	9072908	3	1	225	90 72 906	ZWISCHENRAD KPL
LAGERFLANSCH	11219918	6	1	79	10 53 430 7	V.PUMPE
LAGERHALTER	9887948	14	2	126	10 14 360 7	RS SCHWENKLAGER
LAGERRING	540272714	3	1	616	54 02 704 14	ABTRIEB KPL
LAGERSCHALE	7025904	17	2	154	11 21 593 6	PUMPENELEMENT
LAMELLENTRAEGER	501559414	96	1	339	99 04 645 14	ANTRIEB
LAMELLENTRAEGER	944406203	75	1	412	96 93 178 01	FAHRANTRIEB
LASCHE	10591681	50	4	586	79 04 112 14	UNTERFLASCHE
LASCHE	10591682	18	4	586	79 04 112 14	UNTERFLASCHE
LASCHE	11271487	18	8	593	79 04 871 14	UNTERFLASCHE
LASCHE	950610714	10	2	648	99 35 606 14	LASCHE KPL
LASCHE	953580303	10	1	388	99 18 041 14	VERZURRUNG OW
LASCHE	959476014	7	2	570	11 28 774 6	MONTAGETEILE
LASCHE	959912014	11	6	309	99 29 803 14	VERZURRUNG BALLAST
LASCHE	959912514	15	12	309	99 29 803 14	VERZURRUNG BALLAST
LASCHE FIXPUNKT EINZIEHS	970827603	9	1	329	99 29 258 14	EZW ROLLENPAKET
LASCHE KPL	993560614	26	4	644	10 51 971 3	SELBSTVERLADESYSTEM NR
LASCHE LI KPL	11235361	11	1	64	10 51 969 4	A-BOCK AUFRICHTZYL EINBA
LASCHE RE KPL	11235382	21	1	64	10 51 969 4	A-BOCK AUFRICHTZYL EINBA
LASCHE SCHWK	992982314	14	6	309	99 29 803 14	VERZURRUNG BALLAST
LASTHAKEN	790386214	129	1	3	01 38 281 14	LR 1300 SX
LASTHALTEVENTIL	592022414	3	2	465	10 51 959 1	VERROHRUNG HYDR
LAUFROLLE KPL	10552633	14	16	408	10 55 876 0	RAUPENTRAEGER RE KPL
LAUFROLLE KPL	10552633	14	16	417	10 55 876 1	RAUPENTRAEGER LI KPL
LAUTSPRECHER	10350334	71	2	351	11 27 973 6	KABINE EL
LECKOELRUECKLAUF	10145885	214	1	172	10 14 032 7	DIESELMOTOR
LED-LAMPE	260514602	25	7	359	10 53 171 8	TASTATUR
LED-LAMPE	260514602	38	1	629	11 21 530 2	KABINE REST EL
LEISTE	10349434	21	4	302	11 24 483 7	BEF-TEILE OW
LEISTE	10546407	9	2	298	10 54 591 0	MOTORABDECKUNG
LEISTE	10590801	10	1	536	11 29 488 4	SEILSCHUTZ KPL

Bezeichnung	Artikel	Pos.	Menge	Blatt	Baugruppe	Bezeichnung
LEISTE	289003214	10	1	572	11 29 457 3	SEILSCHUTZ KPL
LEISTE	289008514	21	1	541	11 29 938 4	MONTAGETEILE
LEISTE	289012914	10	1	530	11 29 451 7	SEILSCHUTZ KPL
LEISTE	289016714	10	1	573	11 29 462 6	SEILSCHUTZ KPL
LEISTE	592287014	26	1	366	10 35 250 8	KABINE
LEISTE	948282314	6	1	60	10 56 067 3	BATTERIE EINBAU KPL
LEISTE	967559503	11	2	570	11 28 774 6	MONTAGETEILE
LEISTE	971303203	34	1	450	11 23 820 3	ANLENKSTUECK KPL
LEISTE	971303203	10	1	484	11 28 725 5	SEILSCHUTZ KPL
LEITER	789038114	15	1	444	10 56 183 8	WERKZEUG
LEITER EINBAU	990870614	555	1	3	01 38 281 14	LR 1300 SX
LEITER EINBAU	990870614	40	1	6	11 24 047 9	OW KPL
LEITER EINBAU	994078814	583	1	3	01 38 281 14	LR 1300 SX
LEITER KPL	10226190	1	1	59	99 08 706 14	LEITER EINBAU
LEITER KPL	10349798	1	1	630	99 40 788 14	LEITER EINBAU
LEITRAD	11299752	1	1	410	10 55 716 2	LEITRAD KPL
LEITRAD KPL	10557162	1	1	409	10 55 716 1	LEITRADEINHEIT KPL
LEITRADEINHEIT KPL	10557161	2	1	408	10 55 876 0	RAUPENTRAEGER RE KPL
LEITRADEINHEIT KPL	10557161	2	1	417	10 55 876 1	RAUPENTRAEGER LI KPL
LEITUNG	11236713	6	1	700	11 21 750 0	VERFLUESSIGER
LEITUNG	600204105	45	5	708	10 56 013 7	FREMDEINSPEISUNG BATTERI
LEITUNG HYDR	919023914	29	1	443	10 56 187 5	WERKZEUGAUSRUESTUNG
LEITUNGSBRUCHSICHERUNG	592179114	3	2	547	10 53 146 1	VERROHRUNG HYDR
LEITUNGSSCHUTZSCHALTER	10351100	21	1	629	11 21 530 2	KABINE REST EL
LEITUNGSSCHUTZSCHALTER	10351101	60	1	354	10 55 963 5	SCHALTSCHR X1
LEITUNGSSCHUTZSCHALTER	10351102	61	3	354	10 55 963 5	SCHALTSCHR X1
LEITUNGSSCHUTZSCHALTER	10351103	62	1	354	10 55 963 5	SCHALTSCHR X1
LEITUNGSSCHUTZSCHALTER	10351104	63	2	354	10 55 963 5	SCHALTSCHR X1
LEITUNGSSCHUTZSCHALTER	10351105	64	1	354	10 55 963 5	SCHALTSCHR X1
LEITUNGSSCHUTZSCHALTER	10351106	65	3	354	10 55 963 5	SCHALTSCHR X1
LEUCHTDRUCKTASTER	693003614	31	1	714	10 52 155 9	MODUL BETANKUNGSANLAG
LEUCHTENHALTER	10537562	2	1	385	10 53 756 0	LEUCHTENHALTER KPL
LEUCHTENHALTER KPL	10537560	45	1	350	11 29 327 3	KABINE KPL
LEUCHTSCHALTKONTAKTGE	6001593	21	5	359	10 53 171 8	TASTATUR
LEUCHTSCHALTKONTAKTGE	6001593	36	1	629	11 21 530 2	KABINE REST EL
LEUCHTTASTER	606667214	37	1	629	11 21 530 2	KABINE REST EL
LEUCHTTASTER	606667814	12	1	359	10 53 171 8	TASTATUR
LEUCHTTASTER	606672114	10	2	359	10 53 171 8	TASTATUR
LEUCHTTASTER	606674714	11	4	359	10 53 171 8	TASTATUR
LEUCHTTASTKONTAKTGEBE	6204372	20	2	359	10 53 171 8	TASTATUR
LIBELLE EINBAU	970785703	44	1	350	11 29 327 3	KABINE KPL
LINSENKOPFSCHRAUBE 10.9	10137839	43	4	123	10 13 802 6	RS ZYL.+STEUERPL.+WELLE
LINSENKOPFSCHRAUBE 10.9	10137839	43	4	129	10 14 131 6	ANSCHLUSSPLATTE VORM.
LOCHBLECH	10135441	2	1	182	10 14 861 5	OELWANNE VORM.
LOCHBLECH	10565879	10	1	296	10 56 580 8	TUER
LOCHBLECH	10566239	12	1	295	10 56 623 7	TUER
LOCHBLECH	10578841	12	1	290	10 57 883 5	TUER
LOCHBLECH	10578971	10	1	292	10 57 897 6	TUER
LOCHBLECH	10579423	12	1	294	10 57 940 0	TUER
LOCHBLECH	11290846	165	2	78	11 24 682 0	VERTEILERGETRIEBE
LOEFFELRAD	11238878	10	1	518	69 28 155 14	WINDGEBER
LUEFTER	10223209	80	1	378	59 22 930 14	KLIMAGERAET
LUEFTER	10352188	5	1	26	10 22 592 5	KUEHLER MOTOR
LUEFTER	11267555	10	1	257	10 57 423 7	KUEHLER MOTOR
LUEFTERABDECKUNG	10223362	10	1	290	10 57 883 5	TUER
LUEFTERABDECKUNG	10565889	2	1	296	10 56 580 8	TUER
LUEFTERHAUBE	10352186	2	1	26	10 22 592 5	KUEHLER MOTOR
LUEFTERMOTOR	11236708	2	1	700	11 21 750 0	VERFLUESSIGER
LUEFTERRING	10352187	3	1	26	10 22 592 5	KUEHLER MOTOR
LUFTANSAUGROHR	10146758	1	1	220	10 14 736 6	LUFTANSAUGROHR ANBAU

Bezeichnung	Artikel	Pos.	Menge	Blatt	Baugruppe	Bezeichnung
LUFTANSAUGROHR ANBAU	10147366	220	1	172	10 14 032 7	DIESELMOTOR
LUFTANSAUGUNG ANBAU	10147364	224	1	172	10 14 032 7	DIESELMOTOR
LUFTDUESE	10352465	53	1	366	10 35 250 8	KABINE
LUFTDUESE	592289314	52	1	366	10 35 250 8	KABINE
LUFTFEDER	10289982	51	1	694	10 28 999 2	SCHWINGSYSTEM
LUFTFILTER	11246790	10	1	264	11 24 114 2	ANSAUGANLAGE LUFT
M-RING	10140968	4	1	190	10 14 351 1	KOLBEN KPL.
MAGNETSPULE	11229186	1	2	20	10 59 143 5	WEGEVENTIL
MAGNETSPULE	693208614	1	2	19	11 22 918 4	WEGEVENTIL
MAGNETVENTIL	10336968	120	1	346	51 14 347 14	DW SICHERUNGSBLOCK
MAGNETVENTIL	11226980	6	1	657	59 21 584 14	SENKBREMSVENTIL
MAGNETVENTIL	11254299	1	1	702	10 56 536 7	MAGNETVENTIL EINBAUSATZ
MAGNETVENTIL EINBAUSATZ	10565367	1	1	701	10 56 536 8	MAGNETVENTIL EINBAUSATZ
MAGNETVENTIL EINBAUSATZ	10565368	12	1	699	11 23 189 1	KLIMAANLAGE NRS
MANOMETER	750001114	7	1	444	10 56 183 8	WERKZEUG
MANOMETER	750001414	11	1	547	10 53 146 1	VERROHRUNG HYDR
MANOMETER	750003414	8	1	444	10 56 183 8	WERKZEUG
MANOMETERANSCHLUSS	7363730	9	2	444	10 56 183 8	WERKZEUG
MANOMETERDIREKTANSCHL	510694314	10	2	444	10 56 183 8	WERKZEUG
MANOMETERDIREKTANSCHL	510694314	12	3	547	10 53 146 1	VERROHRUNG HYDR
MANTELRING	10285620	25	2	99	10 11 835 7	RS ANSCHLUSSGEHAEUSE
MANTELRING	10285620	27	2	100	92 74 731	DS ANSCHLUSSGEHAEUSE
MASSEVERBINDUNGSBLECH	9080911	4	1	223	90 78 314	HEIZFLANSCH ANBAU
MEISTERSCHALTER	11214818	10	1	356	10 51 907 9	STEUERSTAND LI
MEISTERSCHALTER	11214820	10	1	305	10 51 127 4	DOPPEL T-MEISTERSCH EIN
MEMBRANSPEICHER	592274714	6	2	392	11 25 903 1	VERROHRUNG HYDR
MEMBRANSPEICHER	592274714	4	1	453	10 51 826 1	ANLENKSTUECK HYDR
MESSSCHLAUCH	7002475	11	2	444	10 56 183 8	WERKZEUG
MESSSTUTZEN	510629008	205	2	392	11 25 903 1	VERROHRUNG HYDR
MESSSTUTZEN	510664814	200	2	12	11 29 618 6	OW HYDR
MESSSTUTZEN	510664814	701	2	435	11 26 260 6	WINDE 1 HYDR
MESSSTUTZEN	510664814	701	2	441	11 26 261 1	WINDE 2 HYDR
MESSSTUTZEN	510664814	613	2	608	10 51 726 2	VERROHRUNG HYDR
MESSSTUTZEN	510694514	202	19	12	11 29 618 6	OW HYDR
MESSSTUTZEN	510694514	201	2	66	10 51 969 5	A-BOCK AUFRICHTZYL HYDR
MESSSTUTZEN	510694514	671	14	76	11 24 773 5	AGGREGAT HYDR
MESSSTUTZEN	510694514	201	2	312	10 51 969 8	NADELEINZIEHWINDE HYDR
MESSSTUTZEN	510694514	201	2	321	10 51 968 7	HAUPT EZW HYDR
MESSSTUTZEN	510694514	203	2	344	10 55 216 1	VERROHRUNG HYDR
MESSSTUTZEN	510694514	204	8	392	11 25 903 1	VERROHRUNG HYDR
MESSSTUTZEN	510694514	700	2	435	11 26 260 6	WINDE 1 HYDR
MESSSTUTZEN	510694514	700	2	441	11 26 261 1	WINDE 2 HYDR
MESSSTUTZEN	510694514	201	1	465	10 51 959 1	VERROHRUNG HYDR
MESSSTUTZEN	510694514	205	2	547	10 53 146 1	VERROHRUNG HYDR
MESSSTUTZEN	510694514	202	1	652	10 51 973 8	SELBSTVERLADESYSTEM H
MESSSTUTZEN	510695314	204	1	547	10 53 146 1	VERROHRUNG HYDR
MESSSTUTZEN	510695314	201	2	652	10 51 973 8	SELBSTVERLADESYSTEM H
MESSSTUTZEN	510695314	706	1	662	11 89 408 3	VERROHRUNG HYDR
MESSSTUTZEN	7409720	201	1	12	11 29 618 6	OW HYDR
MESSSTUTZEN	7409720	304	2	75	11 24 773 5	AGGREGAT HYDR
MESSSTUTZEN	7409720	200	2	344	10 55 216 1	VERROHRUNG HYDR
MISCHER	10144086	5	1	268	11 24 114 3	ABGASANLAGE
MITNEHMER	10348618	13	1	706	10 52 293 0	DW GEBER NRS
MITNEHMER EINBAU	10552681	20	1	6	11 24 047 9	OW KPL
MITTELTEIL KPL	11235481	12	1	389	11 23 547 8	UW KPL
MODEM KPL NRS	11223226	10	1	598	10 51 118 5	MODEM NRS
MODEM NRS	10511185	438	1	3	01 38 281 14	LR 1300 SX
MODUL BETANKUNGSANLAG	10521559	11	1	710	10 52 155 4	BETANKUNGSANLAGE NRS
MODULBAUGRUPPENTRAEGE	916793914	1	2	62	10 56 069 4	MODULE EINBAU
MODULE EINBAU	10560694	49	1	6	11 24 047 9	OW KPL

Bezeichnung	Artikel	Pos.	Menge	Blatt	Baugruppe	Bezeichnung
MONITOR KABINE ANBAU	10578486	10	1	686	10 58 064 7	VIDEOUEBERWACHUNGSANL
MONITOR LCD	11240503	1	1	684	10 53 352 4	KABINE EL
MONITOR LCD KPL	11260077	24	1	362	11 26 095 7	STEUERSTAND RE
MONTAGEPLATTE	10526962	21	1	354	10 55 963 5	SCHALTSCHR X1
MONTAGETEILE	10014275	92	1	692	10 04 363 3	FAHRERSITZ LUFTGEFEDERT
MONTAGETEILE	10014276	93	1	692	10 04 363 3	FAHRERSITZ LUFTGEFEDERT
MONTAGETEILE	10526560	11	1	306	99 23 386 14	BALLASTGEWICHT ANORD
MONTAGETEILE	11265572	11	1	52	11 27 315 5	ZENTRALSCHMIERUNG
MONTAGETEILE	11267716	11	1	704	11 28 423 6	ZENTRALSCHMIERUNG NRS
MONTAGETEILE	11283576	2	1	514	99 06 461 14	WINDMESSER KPL
MONTAGETEILE	11286299	11	1	509	11 24 132 4	AL KOPF KPL
MONTAGETEILE	11287746	11	1	564	11 24 263 6	NADELKOPF KPL
MONTAGETEILE	11294267	11	1	531	11 24 475 9	A-BOCK 2 KPL
MONTAGETEILE	11299384	11	1	538	11 24 611 6	A-BOCK 3 KPL
MOTOR	592293214	60	1	379	10 58 467 1	WASSERVENTIL
MOTORABDECKUNG	10545910	2	1	282	11 24 409 0	VERKLEIDUNG OW EINBAU KP
MOTORFLANSCH	540273014	7	1	617	54 02 705 14	ANTRIEB KPL
MOTORHALTER	11267559	26	1	257	10 57 423 7	KUEHLER MOTOR
MOTORLAGER KPL	11241138	12	1	73	11 24 048 0	ZENTRALAGGREGAT
MOTORREGELUNGSENSORIK	10142977	581	1	173	10 14 032 7	DIESELMOTOR
MOTORSCHUTZSCHALTER	606271314	33	1	708	10 56 013 7	FREMDEINSPEISUNG BATTERI
MOTORSTEUERGERAET	10145725	570	1	173	10 14 032 7	DIESELMOTOR
MOTORSTEUERGERAET	10883842	1	1	247	10 14 572 5	MOTORSTEUERGERAET
MOTORVORMONTAGE	11241139	20	1	73	11 24 048 0	ZENTRALAGGREGAT
MUFFE	10447748	4	6	25	10 44 510 5	SCHNELLVERSCHLUSSKUPPL
MUFFE	10447748	4	4	400	10 44 510 2	SCHNELLVERSCHLUSSKUPPL
MUFFE	10447748	4	4	401	10 44 510 1	SCHNELLVERSCHLUSSKUPPL
MUTTER DIN 934 M30	10584965	11	4	586	79 04 112 14	UNTERFLASCHE
MUTTER DIN 934 M30	10584965	11	4	593	79 04 871 14	UNTERFLASCHE
MUTTER LWN 8-60-106 M33 10	412705014	12	80	387	10 51 969 6	VERBINDUNG OW UW
MUTTER M22X1.5 11SMNPB30	9072969	13	1	136	10 12 226 5	DS REGELVENTIL
MUTTER M24X1 9SMNPB28K	9077401	28	1	136	10 12 226 5	DS REGELVENTIL
NABE	10120188	7	1	204	10 13 382 3	ABSAUGPUMPE VORM.
NABE	11293193	6	1	400	10 44 510 2	SCHNELLVERSCHLUSSKUPPL
NADELANBAUTEILE	11246182	90	1	3	01 38 281 14	LR 1300 SX
NADELEINZIEHWINDE	10519697	23	1	2	01 38 281 14	LR 1300 SX
NADELEINZIEHWINDE HYDR	10519698	2	1	311	10 51 969 7	NADELEINZIEHWINDE
NADELKAEFIG	747462814	20	1	616	54 02 704 14	ABTRIEB KPL
NADELKOPF KPL	11242636	105	1	3	01 38 281 14	LR 1300 SX
NADELN	540244214	14	72	613	54 02 701 14	PLANETENSTUFE
NADELN	540271114	24	48	613	54 02 701 14	PLANETENSTUFE
NAEHERUNGSSCHALTER	693067614	11	2	510	10 53 141 3	AL KOPF EL
NIVEAUGEBER	10134517	22	1	171	10 14 032 7	DIESELMOTOR
NIVEAUGEBER	10528589	18	1	48	10 56 073 3	KRAFTSTOFFTANK KPL
NIVEAUGEBER	10529210	14	1	44	10 56 070 1	TANK HYDR KPL
NIVEAUGEBER	11088130	1	1	185	10 13 451 7	NIVEAUGEBER
NIVEAUSONDE	10517426	81	1	29	11 24 519 0	OW EL
NOCKENENDSCHALTER	606281014	45	1	28	11 24 519 0	OW EL
NOCKENWELLE KPL.	10138231	100	1	171	10 14 032 7	DIESELMOTOR
NOT-AUS TASTER	693073014	33	1	362	11 26 095 7	STEUERSTAND RE
NOT-AUS TASTER	693073014	33	1	714	10 52 155 9	MODUL BETANKUNGSANLAG
NOTBETRIEB EL NRS	11250162	447	1	3	01 38 281 14	LR 1300 SX
NUTENSTEIN	9076196	18	1	127	10 12 224 5	RS HEBEL
NUTRING	10352315	55	1	669	59 21 826 14	ABSTUETZZYL
NUTRING	726306414	10	1	690	59 20 008 14	DOPPELWIRKZYL
NUTRING	726307914	10	1	23	51 33 139 14	DOPPELWIRKZYL
NUTRING	726308514	85	1	669	59 21 826 14	ABSTUETZZYL
NUTRING	790400514	14	1	548	59 21 280 14	EINFACHWIRKZYL
O-RING	10002167	4	2	230	10 14 821 5	THERMOSTATGEHAEUSE AN
O-RING	10002309	24	1	121	10 12 224 8	RS ZUSATZTEILE

Bezeichnung	Artikel	Pos.	Menge	Blatt	Baugruppe	Bezeichnung
O-RING	10002309	24	1	134	10 13 803 3	DICHTSATZ KPL.
O-RING	10004261	9	1	175	10 14 768 6	AGGREGATETRAEGER ANBA
O-RING	10016874	17	2	133	10 12 226 2	RS VERSTELLUNG
O-RING	10016947	28	2	135	10 13 803 4	DS ANSCHLUSSPLATTE
O-RING	10097551	4	1	91	11 26 744 7	WECHSELVENTIL
O-RING	10097988	6	2	413	79 05 233 14	TRAGROLLE KPL
O-RING	10099094	24	1	144	11 22 127 4	PUMPENELEMENT
O-RING	10099094	24	1	151	10 35 161 0	DS KPL
O-RING	10115240	27	1	399	11 22 473 8	VERSTELLUNG
O-RING	10116255	1	1	224	10 29 998 8	HEIZFLANSCH VORM.
O-RING	10130757	2	1	210	10 13 508 0	DRUCKROHRSTUTZEN
O-RING	10130757	1	1	211	10 14 121 6	DS DRUCKROHRSTUTZEN
O-RING	10217777	2	1	244	10 12 843 9	VERSCHLUSSTEILE
O-RING	10218953	3	1	45	10 51 572 4	RUECKLAUFFILTER
O-RING	10282774	4	2	187	10 14 275 8	ZYLINDER
O-RING	10340226	20	2	273	10 30 300 7	KRAFTSTOFFVORFILTER
O-RING	10342770	3	1	193	10 13 728 5	ZYLINDERKOPF
O-RING	10350604	2	1	159	10 22 358 1	DRUCKFILTER
O-RING	10351605	22	1	144	11 22 127 4	PUMPENELEMENT
O-RING	10351605	22	1	151	10 35 161 0	DS KPL
O-RING	10351608	23	4	144	11 22 127 4	PUMPENELEMENT
O-RING	10351608	23	4	151	10 35 161 0	DS KPL
O-RING	10352356	105	3	669	59 21 826 14	ABSTUETZZYL
O-RING	10352361	135	1	669	59 21 826 14	ABSTUETZZYL
O-RING	10352362	145	1	669	59 21 826 14	ABSTUETZZYL
O-RING	10548553	59	1	339	99 04 645 14	ANTRIEB
O-RING	10593504	320	2	78	11 24 682 0	VERTEILERGETRIEBE
O-RING	10802833	22	1	154	11 21 593 6	PUMPENELEMENT
O-RING	11008055	3	1	221	10 14 736 9	ANSAUGSTUTZEN ANBAU
O-RING	11066168	4	1	202	10 13 394 5	SCHMIEROELPUMPE
O-RING	11212730	10	1	89	11 06 730 4	ABSCHALTVENTIL
O-RING	11215707	23	4	154	11 21 593 6	PUMPENELEMENT
O-RING	11219374	8	1	92	11 21 935 0	PUMPENDECKEL
O-RING	11219376	10	1	94	11 21 991 8	LAGERFLANSCH
O-RING	11221283	2	1	150	11 22 127 6	ADAPTER
O-RING	11224740	25	1	397	51 24 059 14	V.MOTOR
O-RING	11226084	90	1	346	51 14 347 14	DW SICHERUNGSBLOCK
O-RING	11226144	210	4	346	51 14 347 14	DW SICHERUNGSBLOCK
O-RING	11239916	4	1	655	51 16 404 14	SENKBREMSVENTIL
O-RING	11249804	9	1	396	11 89 617 8	DS
O-RING	11251423	8	2	396	11 89 617 8	DS
O-RING	11267377	6	1	82	11 21 992 7	DECKEL
O-RING	11267377	6	1	83	11 21 992 9	DECKEL
O-RING	11267418	9	1	87	10 59 347 4	DRUCKBEGRENZUNGSVENTI
O-RING	11267418	8	1	88	11 21 936 9	VERSCHLUSSATZ
O-RING	510587908	26	1	167	10 57 532 2	ANSAUGROHR OEL KPL
O-RING	592293414	180	1	378	59 22 930 14	KLIMAGERAET
O-RING	592293514	190	1	378	59 22 930 14	KLIMAGERAET
O-RING	7000329	23	2	100	92 74 731	DS ANSCHLUSSGEHAEUSE
O-RING	7004512	32	1	95	10 11 834 9	DOPPELV.PUMPE
O-RING	7004512	32	1	114	92 76 408	DS DOPPELPUMPE
O-RING	7006213	9	1	88	11 21 936 9	VERSCHLUSSATZ
O-RING	7007492	10	1	87	10 59 347 4	DRUCKBEGRENZUNGSVENTI
O-RING	7009080	5	1	230	10 14 821 5	THERMOSTATGEHAEUSE AN
O-RING	7019733	2	1	149	70 19 834	ADAPTER
O-RING	7022118	29	2	135	10 13 803 4	DS ANSCHLUSSPLATTE
O-RING	7022118	14	1	397	51 24 059 14	V.MOTOR
O-RING	7028151	26	1	399	11 22 473 8	VERSTELLUNG
O-RING	726401514	15	1	48	10 56 073 3	KRAFTSTOFFTANK KPL
O-RING	726403201	89	1	412	96 93 178 01	FAHRANTRIEB

Bezeichnung	Artikel	Pos.	Menge	Blatt	Baugruppe	Bezeichnung
O-RING	726403514	18	1	24	51 05 719 14	SCHNELLVERSCHRAUBUNG
O-RING	726404414	20	4	168	10 58 017 0	RUECKLAUFROHR
O-RING	726408414	19	1	24	51 05 719 14	SCHNELLVERSCHRAUBUNG
O-RING	726409714	27	1	167	10 57 532 2	ANSAUGROHR OEL KPL
O-RING	726409814	24	3	44	10 56 070 1	TANK HYDR KPL
O-RING	726410201	79	1	412	96 93 178 01	FAHRANTRIEB
O-RING	726411214	29	3	75	11 24 773 5	AGGREGAT HYDR
O-RING	726411614	2	1	22	51 17 042 14	SCHNELLVERSCHRAUBUNG
O-RING	726411614	2	1	446	51 17 043 14	SCHNELLVERSCHRAUBUNG
O-RING	726424214	16	1	617	54 02 705 14	ANTRIEB KPL
O-RING	726428401	91	1	412	96 93 178 01	FAHRANTRIEB
O-RING	726428714	25	2	44	10 56 070 1	TANK HYDR KPL
O-RING	726429814	5	1	91	11 26 744 7	WECHSELVENTIL
O-RING	726431414	25	2	167	10 57 532 2	ANSAUGROHR OEL KPL
O-RING	726431414	29	1	167	10 57 532 2	ANSAUGROHR OEL KPL
O-RING	726450601	6	2	412	96 93 178 01	FAHRANTRIEB
O-RING	726456214	58	1	339	99 04 645 14	ANTRIEB
O-RING	726456914	8	1	23	51 33 139 14	DOPPELWIRKZYL
O-RING	726456914	8	1	690	59 20 008 14	DOPPELWIRKZYL
O-RING	726459414	12	1	397	51 24 059 14	V.MOTOR
O-RING	726461014	24	2	392	11 25 903 1	VERROHRUNG HYDR
O-RING	726461714	9	2	344	10 55 216 1	VERROHRUNG HYDR
O-RING	7264625	1	1	183	50 04 624	OELABLASSSCHRAUBE
O-RING	726464214	3	1	22	51 17 042 14	SCHNELLVERSCHRAUBUNG
O-RING	726464214	3	1	446	51 17 043 14	SCHNELLVERSCHRAUBUNG
O-RING	726468814	20	1	548	59 21 280 14	EINFACHWIRKZYL
O-RING	726469014	70	1	615	54 02 703 14	FLANSCH KPL
O-RING	7380015	22	2	100	92 74 731	DS ANSCHLUSSGEHAEUSE
O-RING	7380083	3	1	232	10 14 274 2	KUEHLMITTELKRUEMMER AN
O-RING	7380120	28	2	100	92 74 731	DS ANSCHLUSSGEHAEUSE
O-RING	7380297	39	1	124	10 13 802 7	RS WELLE
O-RING	7380297	39	1	132	10 13 803 2	RS VERSCHLUSSRING
O-RING	7380297	31	1	134	10 13 803 3	DICHTSATZ KPL.
O-RING	7380297	21	1	140	10 13 452 1	DURCHTRIEB
O-RING	7380348	24	2	100	92 74 731	DS ANSCHLUSSGEHAEUSE
O-RING	7380423	12	1	182	10 14 861 5	OELWANNE VORM.
O-RING	7380574	18	1	133	10 12 226 2	RS VERSTELLUNG
O-RING	7380576	27	1	136	10 12 226 5	DS REGELVENTIL
O-RING	7380596	81	1	102	92 73 644	DS REGELVENTIL
O-RING	7380601	22	1	138	10 13 000 5	DURCHTRIEB
O-RING	7380601	22	1	140	10 13 452 1	DURCHTRIEB
O-RING	7380605	22	1	137	10 12 987 4	DURCHTRIEB
O-RING	7380605	5	1	222	10 14 736 4	LUFTANSAUGUNG ANBAU
O-RING	7380605	40	1	261	11 24 114 1	KUEHLER EINBAU LADELUFT
O-RING	7380608	26	1	136	10 12 226 5	DS REGELVENTIL
O-RING	7380610	23	2	135	10 13 803 4	DS ANSCHLUSSPLATTE
O-RING	7380612	65	1	102	92 73 644	DS REGELVENTIL
O-RING	7380648	32	10	100	92 74 731	DS ANSCHLUSSGEHAEUSE
O-RING	7380648	64	5	101	90 74 418	REGELVENTIL
O-RING	7380648	64	5	102	92 73 644	DS REGELVENTIL
O-RING	7380653	8	2	175	10 14 768 6	AGGREGATETRAEGER ANBA
O-RING	7380653	9	1	242	10 11 557 7	SCHWUNGRADGEHAEUSE AN
O-RING	7380656	18	4	114	92 76 408	DS DOPPELPUMPE
O-RING	7380657	36	1	112	92 68 016	RS VERSCHLUSSRING
O-RING	7380657	2	1	252	10 14 637 4	VERSCHLUSSTEILE
O-RING	7380691	22	1	139	10 13 235 7	ANBAUSATZ DURCHTRIEB
O-RING	7380691	22	1	141	10 13 806 8	ANBAUSATZ DURCHTRIEB
O-RING	7380865	62	1	102	92 73 644	DS REGELVENTIL
O-RING	7380868	70	1	102	92 73 644	DS REGELVENTIL
O-RING	7380888	56	2	100	92 74 731	DS ANSCHLUSSGEHAEUSE

Bezeichnung	Artikel	Pos.	Menge	Blatt	Baugruppe	Bezeichnung
O-RING	7380888	61	1	101	90 74 418	REGELVENTIL
O-RING	7380888	61	1	102	92 73 644	DS REGELVENTIL
O-RING	7380955	9	2	200	10 12 948 0	OELKUEHLER VORM.
O-RING	7380970	41	1	261	11 24 114 1	KUEHLER EINBAU LADELUFT
O-RING	7380986	12	1	273	10 30 300 7	KRAFTSTOFFVORFILTER
O-RING	7380987	21	1	136	10 12 226 5	DS REGELVENTIL
O-RING	7381004	70	1	113	92 73 187	RS MAGNET
O-RING	7381013	23	2	121	10 12 224 8	RS ZUSATZTEILE
O-RING	7381013	23	2	134	10 13 803 3	DICHTSATZ KPL.
O-RING	7381056	24	1	102	92 73 644	DS REGELVENTIL
O-RING	7381082	82	1	102	92 73 644	DS REGELVENTIL
O-RING	7381087	63	1	102	92 73 644	DS REGELVENTIL
O-RING	7381103	60	1	102	92 73 644	DS REGELVENTIL
O-RING	7381103	2	1	245	10 12 797 9	VERSCHLUSSTEILE
O-RING	7381103	2	1	251	10 13 307 7	DREHZAHLGEBER KPL.
O-RING	7381127	21	1	130	10 12 352 8	STOPFEN
O-RING	7381127	21	1	135	10 13 803 4	DS ANSCHLUSSPLATTE
O-RING	7381128	20	1	130	10 12 352 8	STOPFEN
O-RING	7381128	22	1	135	10 13 803 4	DS ANSCHLUSSPLATTE
O-RING	7381438	12	1	119	10 12 321 4	DS DRUCKREDUZIERVENTIL
O-RING	7381439	11	1	119	10 12 321 4	DS DRUCKREDUZIERVENTIL
O-RING	7381440	10	1	119	10 12 321 4	DS DRUCKREDUZIERVENTIL
O-RING	7381442	23	1	102	92 73 644	DS REGELVENTIL
O-RING	7381446	22	1	136	10 12 226 5	DS REGELVENTIL
O-RING	7381526	4	1	233	10 14 274 4	KUEHLWASSERENTLUEFTUN
O-RING	7381593	7	2	179	10 14 201 8	KURBELGEHAEUSEENTLUEF
O-RING	7381685	4	1	203	10 13 394 7	ABSAUGPUMPE MIT BEFEST.
O-RING	7381779	7	2	175	10 14 768 6	AGGREGATETRAEGER ANBA
O-RING	7382059	5	1	202	10 13 394 5	SCHMIEROELPUMPE
O-RING	7412937	15	1	273	10 30 300 7	KRAFTSTOFFVORFILTER
O-RING	790311914	30	1	75	11 24 773 5	AGGREGAT HYDR
O-RING	790347014	330	1	78	11 24 682 0	VERTEILERGETRIEBE
O-RING	790400614	19	1	548	59 21 280 14	EINFACHWIRKZYL
O-RING	9177947	28	1	167	10 57 532 2	ANSAUGROHR OEL KPL
OELABLASSSCHRAUBE	5004624	8	1	182	10 14 861 5	OELWANNE VORM.
OELABLASSSCHRAUBE G1"X	403900714	17	4	44	10 56 070 1	TANK HYDR KPL
OELABLASSSCHRAUBE G1"X	403900714	16	1	48	10 56 073 3	KRAFTSTOFFTANK KPL
OELABLASSSCHRAUBE G1"X	403900714	33	2	167	10 57 532 2	ANSAUGROHR OEL KPL
OELABLASSSCHRAUBE G1"X	403900714	41	1	254	11 24 114 0	KUEHLER EINBAU WASSER
OELABLASSSCHRAUBE M22X	511442214	27	1	75	11 24 773 5	AGGREGAT HYDR
OELDRUCKEINHEIT	592054714	95	1	339	99 04 645 14	ANTRIEB
OELKUEHLER	10352185	1	1	26	10 22 592 5	KUEHLER MOTOR
OELKUEHLER	5700088	2	1	200	10 12 948 0	OELKUEHLER VORM.
OELKUEHLER ANBAU	10129481	130	1	171	10 14 032 7	DIESELMOTOR
OELKUEHLER EINBAU	10519616	14	1	6	11 24 047 9	OW KPL
OELKUEHLER VORM.	10129480	1	1	199	10 12 948 1	OELKUEHLER ANBAU
OELKUEHLERGEHAEUSE	10129479	1	1	200	10 12 948 0	OELKUEHLER VORM.
OELLEITUNG	10583845	4	1	324	10 55 156 3	WINDE
OELLEITUNG	11893216	6	1	425	10 53 039 8	WINDE
OELLEITUNG VORM.	10146716	25	1	171	10 14 032 7	DIESELMOTOR
OELMESSEINRICHTUNG	933675501	980	1	315	96 96 248 01	WINDE
OELMESSSTAB	10145918	2	1	184	10 14 591 9	OELMESSSTAB MIT ROHR
OELMESSSTAB	11294364	180	1	78	11 24 682 0	VERTEILERGETRIEBE
OELMESSSTAB KPL.	10142567	4	1	169	11 24 113 9	MOTORVORMONTAGE
OELMESSSTAB MIT ROHR	10145919	21	1	171	10 14 032 7	DIESELMOTOR
OELMOTOR	510232214	2	1	608	10 51 726 2	VERROHRUNG HYDR
OELMOTOR	512250114	6	1	257	10 57 423 7	KUEHLER MOTOR
OELMOTOR	512252714	2	1	312	10 51 969 8	NADELEINZIEHWINDE HYDR
OELMOTOR	512294214	2	1	321	10 51 968 7	HAUPT EZW HYDR
OELMOTOR	512299114	3	2	344	10 55 216 1	VERROHRUNG HYDR

Bezeichnung	Artikel	Pos.	Menge	Blatt	Baugruppe	Bezeichnung
OELMOTOR	550945314	6	1	26	10 22 592 5	KUEHLER MOTOR
OELRUECKLAUFLEITUNG	10131350	1	1	186	10 14 671 6	OELLEITUNG VORM.
OELRUECKLAUFLEITUNG	10140138	17	1	236	10 14 013 6	ATL-ANBAU
OELSCHAUGLAS	11287761	16	1	259	11 28 734 7	AUSGLEICHSBEHAELTER
OELSTANDSAUGE	5106280	18	4	44	10 56 070 1	TANK HYDR KPL
OELWANNE	10148614	1	1	182	10 14 861 5	OELWANNE VORM.
OELWANNE MIT BEFEST.	10148444	20	1	171	10 14 032 7	DIESELMOTOR
OELWANNE VORM.	10148615	1	1	181	10 14 844 4	OELWANNE MIT BEFEST.
OMNIFIT	7016208	106	1	123	10 13 802 6	RS ZYL.+STEUERPL.+WELLE
OMNIFIT	7016208	106	1	129	10 14 131 6	ANSCHLUSSPLATTE VORM.
OW DREHVERBINDUNG EINBA	10519631	21	1	6	11 24 047 9	OW KPL
OW EL	11245190	3	1	6	11 24 047 9	OW KPL
OW HYDR	11296186	2	1	6	11 24 047 9	OW KPL
OW KPL	11240479	5	1	2	01 38 281 14	LR 1300 SX
PASSFEDER DIN 6885 B28X1	571827308	400	8	78	11 24 682 0	VERTEILERGETRIEBE
PASSFEDER DIN 6885 B32X18	485529814	410	2	78	11 24 682 0	VERTEILERGETRIEBE
PASSFEDER DIN 6885 B8X7X1	10567120	450	1	78	11 24 682 0	VERTEILERGETRIEBE
PASSHUELSE 16.5X20X20 S2	9074798	9	12	174	10 15 438 6	KURBELGEHAEUSE KPL.
PASSHUELSE 16.5X20X20 S2	9074798	3	2	242	10 11 557 7	SCHWUNGRADGEHAEUSE AN
PASSHUELSE 16X20X20	10134348	3	2	175	10 14 768 6	AGGREGATETRAEGER ANBA
PASSSCHEIBE 55X65X1.5 ST	7380531	44	1	112	92 68 016	RS VERSCHLUSSRING
PASSSCHEIBE DIN 988 16X22	422014001	23	3	617	54 02 705 14	ANTRIEB KPL
PASSSCHEIBE DIN 988 50X62X	4002229	44	1	132	10 13 803 2	RS VERSCHLUSSRING
PASSSCHRAUBE DIN 609 M1	485506014	8	2	550	99 31 679 14	ABSTUETZUNG KPL
PENDEL	990627014	23	1	515	10 59 863 3	PENDEL KPL
PENDEL KPL	10598633	1	1	514	99 06 461 14	WINDMESSER KPL
PILZKNOPF	592289914	73	1	367	10 35 250 8	KABINE
PL FALLE	10348527	13	1	584	79 03 862 14	LASTHAKEN
PL FALLE	10348635	134	1	3	01 38 281 14	LR 1300 SX
PL FALLE	10501398	138	2	3	01 38 281 14	LR 1300 SX
PLANETENACHSE	540271414	28	3	613	54 02 701 14	PLANETENSTUFE
PLANETENACHSE	540272614	2	3	616	54 02 704 14	ABTRIEB KPL
PLANETENRAD	540270614	12	3	613	54 02 701 14	PLANETENSTUFE
PLANETENRAD	540271014	22	3	613	54 02 701 14	PLANETENSTUFE
PLANETENRAD	944404303	18	5	412	96 93 178 01	FAHRANTRIEB
PLANETENRAD	944404803	28	3	412	96 93 178 01	FAHRANTRIEB
PLANETENRAD	944406503	38	3	412	96 93 178 01	FAHRANTRIEB
PLANETENRAD	944434703	48	3	412	96 93 178 01	FAHRANTRIEB
PLANETENSTUFE	11893250	2	1	427	11 89 322 8	REPARATURSATZ
PLANETENSTUFE	11893252	4	1	427	11 89 322 8	REPARATURSATZ
PLANETENSTUFE	540270114	1	1	612	59 20 694 14	WINDE
PLANETENTRAEGER	540271314	27	1	613	54 02 701 14	PLANETENSTUFE
PLANETENTRAEGER	540272514	1	1	616	54 02 704 14	ABTRIEB KPL
PLANETENTRAEGER	944403903	15	1	412	96 93 178 01	FAHRANTRIEB
PLANETENTRAEGER	944404603	25	1	412	96 93 178 01	FAHRANTRIEB
PLANETENTRAEGER	944406403	35	1	412	96 93 178 01	FAHRANTRIEB
PLANETENTRAEGER	969392201	45	1	412	96 93 178 01	FAHRANTRIEB
PLATTE	10098789	22	1	300	11 24 922 2	ABDECKUNG UNTERSEITE
PLATTE	10099005	1	1	332	99 29 389 14	SEITENTEIL
PLATTE	10099005	1	1	333	99 29 392 14	SEITENTEIL
PLATTE	10099009	3	10	335	99 29 386 14	KONSOLE KPL
PLATTE	10099009	3	10	336	99 29 434 14	KONSOLE KPL
PLATTE	10119129	1	1	243	10 11 912 8	VERSCHLUSSTEILE
PLATTE	10225695	37	2	282	11 24 409 0	VERKLEIDUNG OW EINBAU KP
PLATTE	10226477	24	1	370	10 50 133 3	SCHIEBETUER
PLATTE	10336707	1	3	335	99 29 386 14	KONSOLE KPL
PLATTE	10336707	1	3	336	99 29 434 14	KONSOLE KPL
PLATTE	10336708	2	8	335	99 29 386 14	KONSOLE KPL
PLATTE	10336708	2	8	336	99 29 434 14	KONSOLE KPL
PLATTE	10336722	4	3	335	99 29 386 14	KONSOLE KPL

Bezeichnung	Artikel	Pos.	Menge	Blatt	Baugruppe	Bezeichnung
PLATTE	10336722	4	3	336	99 29 434 14	KONSOLE KPL
PLATTE	10447259	39	1	368	10 22 645 4	TUERE ZUBEHOEHR
PLATTE	10522189	7	1	373	59 22 871 14	FRONTSCHEIBE KPL
PLATTE	10540513	24	2	650	11 23 619 7	SELBSTVERLADESYSTEM NR
PLATTE	10545918	10	1	282	11 24 409 0	VERKLEIDUNG OW EINBAU KP
PLATTE	10560687	10	1	300	11 24 922 2	ABDECKUNG UNTERSEITE
PLATTE	10560688	17	1	300	11 24 922 2	ABDECKUNG UNTERSEITE
PLATTE	10560690	16	1	300	11 24 922 2	ABDECKUNG UNTERSEITE
PLATTE	10560691	11	1	300	11 24 922 2	ABDECKUNG UNTERSEITE
PLATTE	10560692	12	1	300	11 24 922 2	ABDECKUNG UNTERSEITE
PLATTE	10583559	15	1	300	11 24 922 2	ABDECKUNG UNTERSEITE
PLATTE	10583611	19	1	300	11 24 922 2	ABDECKUNG UNTERSEITE
PLATTE	10583612	20	1	300	11 24 922 2	ABDECKUNG UNTERSEITE
PLATTE	10583642	51	1	284	11 24 409 0	VERKLEIDUNG OW EINBAU KP
PLATTE	10589204	58	2	450	11 23 820 3	ANLENKSTUECK KPL
PLATTE	11219851	12	2	495	11 23 292 2	AUFLAGE KPL
PLATTE	11219851	11	2	579	11 25 204 2	AUFLAGE KPL
PLATTE	11228227	25	1	650	11 23 619 7	SELBSTVERLADESYSTEM NR
PLATTE	11231673	19	2	512	11 28 629 9	MONTAGETEILE
PLATTE	11244094	28	1	282	11 24 409 0	VERKLEIDUNG OW EINBAU KP
PLATTE	11249223	13	1	300	11 24 922 2	ABDECKUNG UNTERSEITE
PLATTE	11249224	18	1	300	11 24 922 2	ABDECKUNG UNTERSEITE
PLATTE	11249225	21	1	300	11 24 922 2	ABDECKUNG UNTERSEITE
PLATTE	11249678	24	1	300	11 24 922 2	ABDECKUNG UNTERSEITE
PLATTE	971216403	44	2	541	11 29 938 4	MONTAGETEILE
PLEUELLAGER	9073699	3	1	189	11 34 807 2	PLEUELSTANGE
PLEUELLAGER	9075607	2	1	189	11 34 807 2	PLEUELSTANGE
PLEUELSTANGE	11348054	1	1	189	11 34 807 2	PLEUELSTANGE
PLEUELSTANGE	11348072	60	6	171	10 14 032 7	DIESELMOTOR
PODEST	10512048	101	1	367	10 35 250 8	KABINE
PODEST	10512061	89	1	367	10 35 250 8	KABINE
PODEST	11245755	1	2	623	11 24 147 8	UW PODEST
PODEST	992671814	1	2	421	99 23 389 14	UW PODEST
PODESTSICHERUNG KPL	592291414	116	1	367	10 35 250 8	KABINE
PRATZE	10142030	2	1	207	10 15 286 7	INJEKTOR MIT BEFEST.
PRATZE	10142030	1	1	212	10 13 543 2	BEFESTIGUNG INJEKTOR
PRATZE	10146415	1	1	213	10 13 543 4	BEFESTIGUNG DRUCKROHR
PRATZE	10150144	2	1	208	10 15 315 1	DRUCKROHRSTUTZEN
PRESSKLEMME	773920008	26	6	515	10 59 863 3	PENDEL KPL
PRESSKLEMME	773920008	13	4	579	11 25 204 2	AUFLAGE KPL
PROFIL	592291114	97	1	367	10 35 250 8	KABINE
PROFILHOHLWELLE	10350230	130	2	78	11 24 682 0	VERTEILERGETRIEBE
PROFILHOHLWELLE	11253077	140	2	78	11 24 682 0	VERTEILERGETRIEBE
PROFILRING	477100208	26	3	275	11 24 114 5	ANLAGE HARNSTOFF EINBAU
PROFILSCHELLE	10141051	4	1	269	10 14 404 9	SCR KPL.
PROFILSCHELLE	10494116	21	4	268	11 24 114 3	ABGASANLAGE
PROFILSCHELLE	10494117	22	2	268	11 24 114 3	ABGASANLAGE
PROFILSCHNUR	501507014	13	1	614	54 02 702 14	SEILTROMMEL KPL
PROPORTIONALMAGNET	11219375	2	2	93	11 21 991 7	STEUERGERAET
PUFFER	10567622	31	4	254	11 24 114 0	KUEHLER EINBAU WASSER
PUFFER	592286814	13	1	366	10 35 250 8	KABINE
PULTABLAGE	970857103	32	1	282	11 24 409 0	VERKLEIDUNG OW EINBAU KP
PUMPE	10144100	3	1	275	11 24 114 5	ANLAGE HARNSTOFF EINBAU
PUMPENDECKEL	11219350	4	1	79	10 53 430 7	V.PUMPE
PUMPENELEMENT	11215913	1	1	152	10 22 601 3	V.PUMPE
PUMPENELEMENT	11215936	1	1	153	11 21 591 3	PUMPENELEMENT
PUMPENELEMENT	11221268	1	1	142	10 22 650 5	V.PUMPE
PUMPENELEMENT	11221274	1	1	143	11 22 126 8	PUMPENELEMENT
PUMPENGEHAEUSE	10132069	1	1	204	10 13 382 3	ABSAUGPUMPE VORM.
PUMPENGEHAEUSE	11219910	3	1	79	10 53 430 7	V.PUMPE

Bezeichnung	Artikel	Pos.	Menge	Blatt	Baugruppe	Bezeichnung
PUMPENGEHAEUSE	11219930	1	1	84	11 21 991 0	PUMPENGEHAEUSE
QUERGRIFF 1 "	885391814	50	1	443	10 56 187 5	WERKZEUGAUSRUESTUNG
QUERVERBINDER	602731714	51	1	34	10 56 645 8	KLEMMKASTEN
QUERVERBINDER	602812414	88	1	354	10 55 963 5	SCHALTSCHR X1
QUERVERBINDER	693138614	73	1	354	10 55 963 5	SCHALTSCHR X1
RAD SCHWK	385260014	2	2	570	11 28 774 6	MONTAGETEILE
RADIALWELLENDICHTRING	10014510	35	1	112	92 68 016	RS VERSCHLUSSRING
RADIALWELLENDICHTRING	571360008	50	1	339	99 04 645 14	ANTRIEB
RADIO NRS	10592569	14	1	2	01 38 281 14	LR 1300 SX
RAHMEN	10566842	1	1	286	11 24 409 1	VERKLEIDUNG
RAHMEN	11236714	7	1	700	11 21 750 0	VERFLUESSIGER
RAHMEN	11244092	2	1	286	11 24 409 1	VERKLEIDUNG
RAHMEN	11281448	1	1	373	59 22 871 14	FRONTSCHEIBE KPL
RAHMEN	602481914	1	1	363	91 65 251 14	KABELDURCHFUEHRUNG KAB
RAHMEN KPL	11247688	1	1	164	11 24 113 8	MOTORLAGER KPL
RAHMEN SCHWK	10578321	12	1	58	10 58 163 4	KABINENAUFHAENGUNG KPL
RASTBOLZEN M10X1	540272414	60	1	615	54 02 703 14	FLANSCH KPL
RASTHUELSE	540272314	33	1	615	54 02 703 14	FLANSCH KPL
RASTVORRICHTUNG KPL	7025007	23	1	381	70 24 996	SITZRAHMEN
RASTVORRICHTUNG KPL	7025007	23	1	693	70 28 516	SITZRAHMEN
RAUPENTRAEGER LI KPL	10558761	11	1	389	11 23 547 8	UW KPL
RAUPENTRAEGER RE KPL	10558760	10	1	389	11 23 547 8	UW KPL
RECHTECKRING	10472425	109	18	10	11 29 618 6	OW HYDR
RECHTECKRING	10472425	70	3	75	11 24 773 5	AGGREGAT HYDR
RECHTECKRING	10472425	616	2	321	10 51 968 7	HAUPT EZW HYDR
RECHTECKRING	10472425	631	10	394	11 25 903 1	VERROHRUNG HYDR
RECHTECKRING	10472425	740	5	435	11 26 260 6	WINDE 1 HYDR
RECHTECKRING	10472425	740	5	441	11 26 261 1	WINDE 2 HYDR
RECHTECKRING	10490781	110	19	10	11 29 618 6	OW HYDR
RECHTECKRING	10490781	72	2	75	11 24 773 5	AGGREGAT HYDR
RECHTECKRING	10490781	612	2	312	10 51 969 8	NADELEINZIEHWINDE HYDR
RECHTECKRING	10490781	641	2	344	10 55 216 1	VERROHRUNG HYDR
RECHTECKRING	10490784	106	4	10	11 29 618 6	OW HYDR
RECHTECKRING	10490784	71	13	75	11 24 773 5	AGGREGAT HYDR
RECHTECKRING	10490784	640	4	344	10 55 216 1	VERROHRUNG HYDR
RECHTECKRING	10490784	660	1	465	10 51 959 1	VERROHRUNG HYDR
RECHTECKRING	10490784	615	1	652	10 51 973 8	SELBSTVERLADESYSTEM H
RECHTECKRING	10490785	107	4	10	11 29 618 6	OW HYDR
RECHTECKRING	10490787	108	5	10	11 29 618 6	OW HYDR
REDUZIERSTUECK	602604314	56	1	715	10 52 155 9	MODUL BETANKUNGSANLAG
REDUZIERSTUTZEN	11290857	540	1	78	11 24 682 0	VERTEILERGETRIEBE
REDUZIERUNG	260493402	33	1	578	97 14 959 03	SPITZENENDSCHALTER EL
REDUZIERUNG	260493402	33	1	583	91 95 871 14	SPITZENENDSCHALTER EL
REDUZIERUNG	260493402	33	1	634	10 51 167 1	ENDSCHALTER EL
REDUZIERUNG	602620201	84	2	566	10 57 624 5	KABELSATZ
REDUZIERUNG	602620201	38	2	628	99 24 978 14	AL EL
REGELVENTIL	10127478	7	1	116	10 12 878 7	V.PUMPE
REGELVENTIL	10127479	10	1	120	10 12 747 8	REGELVENTIL
REGELVENTIL	10141318	4	1	116	10 12 878 7	V.PUMPE
REGELVENTIL	9074418	4	2	95	10 11 834 9	DOPPELV.PUMPE
REIHENKLEMME	10550739	75	22	354	10 55 963 5	SCHALTSCHR X1
REIHENKLEMME	602125114	22	7	34	10 56 645 8	KLEMMKASTEN
REIHENKLEMME	602151914	86	4	354	10 55 963 5	SCHALTSCHR X1
REIHENKLEMME	602153214	51	2	708	10 56 013 7	FREMDEINSPEISUNG BATTERI
REIHENKLEMME	602153814	23	39	34	10 56 645 8	KLEMMKASTEN
REIHENKLEMME	602153814	74	13	354	10 55 963 5	SCHALTSCHR X1
REIHENKLEMME	602153814	80	4	354	10 55 963 5	SCHALTSCHR X1
REIHENKLEMME	693181114	71	3	354	10 55 963 5	SCHALTSCHR X1
RELAIS	10226635	21	1	160	11 24 448 7	ZENTRALAGGREGAT EL
RELAIS	6202973	53	1	694	10 28 999 2	SCHWINGSYSTEM

Bezeichnung	Artikel	Pos.	Menge	Blatt	Baugruppe	Bezeichnung
RELAIS	630160214	41	2	714	10 52 155 9	MODUL BETANKUNGSANLAG
RELAIS STECKSOCKEL	630122908	84	1	354	10 55 963 5	SCHALTSCHR X1
REPARATURSATZ	10289984	100	1	692	10 04 363 3	FAHRERSITZ LUFTGEFEDERT
REPARATURSATZ	11231317	3	1	427	11 89 322 8	REPARATURSATZ
REPARATURSATZ	11231319	5	1	427	11 89 322 8	REPARATURSATZ
REPARATURSATZ	11231322	1	1	428	11 23 126 9	SEILTROMMEL
REPARATURSATZ	11231336	1	1	429	11 23 127 0	FLANSCHLAGER
REPARATURSATZ	11233487	1	1	427	11 89 322 8	REPARATURSATZ
REPARATURSATZ	11253394	1	1	325	10 58 386 4	FLANSCH
REPARATURSATZ	11253398	1	1	326	10 55 597 3	SEILTROMMEL
REPARATURSATZ	11253401	1	1	327	10 58 386 5	GETRIEBE
REPARATURSATZ	11253440	1	1	328	10 58 384 5	OELLEITUNG
REPARATURSATZ	11893228	1	1	426	11 89 321 3	GETRIEBE
REPARATURSATZ	11893254	1	1	431	11 89 321 5	WINDENBOCK
REPARATURSATZ	11893255	1	1	432	11 89 321 6	OELLEITUNG
RESERVESICHERUNGEN	992081114	56	1	354	10 55 963 5	SCHALTSCHR X1
RIEGEL	10351784	14	1	290	10 57 883 5	TUER
RIEGEL	10351784	14	1	292	10 57 897 6	TUER
RIEGEL	10351784	14	1	294	10 57 940 0	TUER
RIEGEL	10351784	14	1	295	10 56 623 7	TUER
RIEGEL	10351784	16	1	296	10 56 580 8	TUER
RILLENKUGELLAGER	10350232	290	4	78	11 24 682 0	VERTEILERGETRIEBE
RILLENKUGELLAGER	10592555	30	1	339	99 04 645 14	ANTRIEB
RILLENKUGELLAGER	616155214	4	2	457	61 61 541 14	KABELTROMMEL
RILLENKUGELLAGER	745120514	22	8	570	11 28 774 6	MONTAGETEILE
RILLENKUGELLAGER	745120514	30	2	633	10 51 176 9	ZWISCHENHUB NADEL AL KP
RILLENKUGELLAGER	745120514	20	2	637	99 10 116 14	SEILFUEHRUNG
RILLENKUGELLAGER	745128314	40	1	615	54 02 703 14	FLANSCH KPL
RILLENKUGELLAGER	745141814	280	6	78	11 24 682 0	VERTEILERGETRIEBE
RILLENKUGELLAGER	745194714	12	1	617	54 02 705 14	ANTRIEB KPL
RILLENKUGELLAGER	745906614	6	1	615	54 02 703 14	FLANSCH KPL
RILLENKUGELLAGER	745907514	23	1	616	54 02 704 14	ABTRIEB KPL
RILLENKUGELLAGER	746171514	18	2	320	10 51 968 6	EZW OW EINBAU KPL
RING	11220477	10	1	698	11 22 037 2	FUSSPEDAL EL EINBAU
RING	11267455	10	1	92	11 21 935 0	PUMPENDECKEL
RING	9267341	11	1	98	92 67 343	ENTLUEFTUNGSVENTIL
RINGSCHRAUBE DIN 580 M12	402600314	32	2	582	99 38 329 14	SPITZEN AL KPL
RINGSCHRAUBE DIN 580 M12	402600314	34	2	637	99 10 116 14	SEILFUEHRUNG
RINGSCHRAUBE DIN 580 M16	402600514	10	6	309	99 29 803 14	VERZURRUNG BALLAST
RINGSCHRAUBE DIN 580 M8	402600114	62	1	284	11 24 409 0	VERKLEIDUNG OW EINBAU KP
RITZELSCHUTZ	10099140	16	2	341	10 51 968 2	DW OW
RITZELSCHUTZ	10227120	13	1	705	11 26 771 6	MONTAGETEILE
ROHR	10098601	15	4	570	11 28 774 6	MONTAGETEILE
ROHR	11250564	23	1	254	11 24 114 0	KUEHLER EINBAU WASSER
ROHR	11287715	24	1	254	11 24 114 0	KUEHLER EINBAU WASSER
ROHR	11290847	170	1	78	11 24 682 0	VERTEILERGETRIEBE
ROHR	289052014	12	1	557	11 28 982 7	TRANSPORTSICHERUNG
ROHR	289057714	55	1	450	11 23 820 3	ANLENKSTUECK KPL
ROHR	289057714	12	1	491	11 28 794 6	TRANSPORTSICHERUNG
ROHR	592316414	220	1	78	11 24 682 0	VERTEILERGETRIEBE
ROHR	9080660	6	1	182	10 14 861 5	OELWANNE VORM.
ROHR	950343514	5	1	550	99 31 679 14	ABSTUETZUNG KPL
ROHR	956064714	7	2	577	99 48 521 14	SPITZEN AL KPL
ROHR	956213814	22	1	521	99 23 398 14	ROLLENSATZ
ROHR	956374914	26	1	582	99 38 329 14	SPITZEN AL KPL
ROHR	957104414	11	2	633	10 51 176 9	ZWISCHENHUB NADEL AL KP
ROHR	957336914	17	1	512	11 28 629 9	MONTAGETEILE
ROHRLEITUNG	10132170	3	1	217	10 14 588 5	LECKOELRUECKLAUF
ROHRLEITUNG	10132180	20	1	217	10 14 588 5	LECKOELRUECKLAUF
ROHRLEITUNG	10141986	4	1	216	10 14 333 9	KRAFTSTOFFLEITUNGEN

Bezeichnung	Artikel	Pos.	Menge	Blatt	Baugruppe	Bezeichnung
ROHRLEITUNG	10141988	1	1	216	10 14 333 9	KRAFTSTOFFLEITUNGEN
ROHRLEITUNG	10141989	2	1	216	10 14 333 9	KRAFTSTOFFLEITUNGEN
ROHRLEITUNG	10142006	8	1	217	10 14 588 5	LECKOELRUECKLAUF
ROHRLEITUNG	10142080	3	1	216	10 14 333 9	KRAFTSTOFFLEITUNGEN
ROHRLEITUNG	10143235	1	1	217	10 14 588 5	LECKOELRUECKLAUF
ROHRLEITUNG	10143819	20	1	237	10 14 511 2	ABGASSTUTZEN ANBAU
ROHRLEITUNG	10145889	13	1	217	10 14 588 5	LECKOELRUECKLAUF
ROHRLEITUNG	10145914	12	1	237	10 14 511 2	ABGASSTUTZEN ANBAU
ROHRLEITUNG	10146838	4	1	238	10 14 622 4	TAKTVENTIL
ROHRLEITUNG	10146839	5	1	238	10 14 622 4	TAKTVENTIL
ROHRLEITUNG	10146840	6	1	238	10 14 622 4	TAKTVENTIL
ROHRLEITUNG	10147368	2	1	221	10 14 736 9	ANSAUGSTUTZEN ANBAU
ROHRLEITUNG	10149699	1	1	231	10 14 821 7	ROHRLEITUNG ANBAU
ROHRLEITUNG ANBAU	10139539	7	1	181	10 14 844 4	OELWANNE MIT BEFEST.
ROHRLEITUNG ANBAU	10148217	381	1	172	10 14 032 7	DIESELMOTOR
ROHRSATZ	10227437	30	1	650	11 23 619 7	SELBSTVERLADESYSTEM NR
ROHRSATZ	10588224	10	1	689	10 51 728 1	VERROHRUNG HYDR
ROHRSCHELLE	10579877	7	1	689	10 51 728 1	VERROHRUNG HYDR
ROHRSCHELLE	11290856	530	1	78	11 24 682 0	VERTEILERGETRIEBE
ROHRSCHELLE	9077164	14	1	238	10 14 622 4	TAKTVENTIL
ROLLE	11256217	19	2	473	11 24 444 4	A-BOCK 1 KPL
ROLLE	289058014	13	1	633	10 51 176 9	ZWISCHENHUB NADEL AL KP
ROLLE	970961303	16	4	570	11 28 774 6	MONTAGETEILE
ROLLE	970961303	23	4	582	99 38 329 14	SPITZEN AL KPL
ROLLE	970961303	19	1	637	99 10 116 14	SEILFUEHRUNG
ROLLE SCHWK	971361703	19	1	320	10 51 968 6	EZW OW EINBAU KPL
ROLLENKOERPER	10097984	1	1	413	79 05 233 14	TRAGROLLE KPL
ROLLENSATZ	992339814	82	1	3	01 38 281 14	LR 1300 SX
ROLLENTRAEGER	919022714	25	1	637	99 10 116 14	SEILFUEHRUNG
RS ANSCHLUSSGEHAEUSE	10118357	90	1	97	10 11 835 0	ANSCHLUSSGEHAEUSE
RS ANSCHLUSSPLATTE	10141317	83	1	116	10 12 878 7	V.PUMPE
RS ANTRIEB	10153606	180	1	171	10 14 032 7	DIESELMOTOR
RS ANTRIEB	11893253	1	1	430	11 89 321 4	ANTRIEB
RS DECKEL	9275443	85	1	95	10 11 834 9	DOPPELV.PUMPE
RS DRUCKABSCHNEIDUNG	10118367	83	1	95	10 11 834 9	DOPPELV.PUMPE
RS DRUCKROHRSTUTZEN	10141140	5	1	208	10 15 315 1	DRUCKROHRSTUTZEN
RS FLANSCH	9077464	1	2	104	10 13 975 2	RS SCHWENKJOCH
RS HEBEL	10122245	7	1	122	10 13 802 5	RS TRIEBWERK
RS INJEKTOR	10152874	5	1	207	10 15 286 7	INJEKTOR MIT BEFEST.
RS KOLBEN MIT GLEITSCHUH	10122692	4	1	122	10 13 802 5	RS TRIEBWERK
RS KOLBEN MIT GLEITSCHUH	9889831	1	9	105	98 89 984	RS TRIEBWERK
RS KOLBEN MIT GLEITSCHUH	9889831	1	1	109	98 89 983	RS TRIEBWERK
RS KURBELWELLENDICHTUN	10121335	2	1	188	10 12 134 5	RS KURBELWELLENDICHTUN
RS KURBELWELLENDICHTUN	10121345	52	1	171	10 14 032 7	DIESELMOTOR
RS KURBELWELLENDICHTUN	10121952	1	1	188	10 12 134 5	RS KURBELWELLENDICHTUN
RS MAGNET	9273187	97	1	96	10 11 834 9	DOPPELV.PUMPE
RS RUECKZUGKUGEL+RUEC	9078214	3	1	122	10 13 802 5	RS TRIEBWERK
RS RUECKZUGKUGEL+RUEC	9889988	14	1	105	98 89 984	RS TRIEBWERK
RS RUECKZUGKUGEL+RUEC	9889988	14	1	109	98 89 983	RS TRIEBWERK
RS SCHWENKJOCH	10122246	8	1	122	10 13 802 5	RS TRIEBWERK
RS SCHWENKJOCH	10139752	84	1	95	10 11 834 9	DOPPELV.PUMPE
RS SCHWENKLAGER	10143607	6	1	122	10 13 802 5	RS TRIEBWERK
RS TRIEBWERK	10138025	81	1	116	10 12 878 7	V.PUMPE
RS TRIEBWERK	9889983	94	1	96	10 11 834 9	DOPPELV.PUMPE
RS TRIEBWERK	9889984	92	1	95	10 11 834 9	DOPPELV.PUMPE
RS VERSCHLUSSRING	10138032	84	1	116	10 12 878 7	V.PUMPE
RS VERSCHLUSSRING	10138032	6	1	134	10 13 803 3	DICHTSATZ KPL.
RS VERSCHLUSSRING	9268016	96	1	96	10 11 834 9	DOPPELV.PUMPE
RS VERSCHLUSSRING	9268016	96	1	114	92 76 408	DS DOPPELPUMPE
RS VERSTELLUNG	10122262	85	1	116	10 12 878 7	V.PUMPE

Bezeichnung	Artikel	Pos.	Menge	Blatt	Baugruppe	Bezeichnung
RS WELLE	10138027	1	1	123	10 13 802 6	RS ZYL.+STEUERPL.+WELLE
RS WELLE	9884402	95	1	96	10 11 834 9	DOPPELV.PUMPE
RS WELLE	9889977	93	1	95	10 11 834 9	DOPPELV.PUMPE
RS ZUSATZTEILE	10122248	80	1	116	10 12 878 7	V.PUMPE
RS ZYL.+STEUERPL.+WELLE	10138026	2	1	122	10 13 802 5	RS TRIEBWERK
RS ZYLINDER+STEUERPLATT	9889832	2	1	109	98 89 983	RS TRIEBWERK
RS ZYLINDER+STEUERPLATT	9889833	2	1	105	98 89 984	RS TRIEBWERK
RUECKENTEIL	10289987	2	1	692	10 04 363 3	FAHRERSITZ LUFTGEFEDERT
RUECKENTEIL	10289988	2	1	380	10 22 506 8	FAHRERSITZ
RUECKFALLSTUETZE	11292598	60	1	2	01 38 281 14	LR 1300 SX
RUECKFALLSTUETZE	919590114	10	1	544	10 53 145 5	RUECKFALLSTUETZE NADEL
RUECKFALLSTUETZE	919590214	11	1	544	10 53 145 5	RUECKFALLSTUETZE NADEL
RUECKFALLSTUETZE NADEL	10531455	13	1	523	11 24 618 2	NADELANBAUTEILE
RUECKFALLSTUETZEN EINBA	11275365	10	1	462	11 29 259 8	RUECKFALLSTUETZE
RUECKFALLSTUETZEN HYDR	10531456	2	1	544	10 53 145 5	RUECKFALLSTUETZE NADEL
RUECKFALLSTUETZEN HYDR	10585108	2	1	462	11 29 259 8	RUECKFALLSTUETZE
RUECKLAUFFILTER	10515724	12	1	44	10 56 070 1	TANK HYDR KPL
RUECKLAUFROHR	10580170	19	1	73	11 24 048 0	ZENTRALAGGREGAT
RUECKSCHLAGVENTIL	10099055	12	2	392	11 25 903 1	VERROHRUNG HYDR
RUECKSCHLAGVENTIL	10119971	9	1	186	10 14 671 6	OELLEITUNG VORM.
RUECKSCHLAGVENTIL	10352371	170	1	669	59 21 826 14	ABSTUETZZYL
RUECKSCHLAGVENTIL	11229182	4	1	17	10 35 148 6	VENTILBLOCK
RUECKSCHLAGVENTIL	11233729	3	2	68	10 22 540 8	VENTILBLOCK
RUECKSCHLAGVENTIL	11233742	9	1	68	10 22 540 8	VENTILBLOCK
RUECKSCHLAGVENTIL	11233749	10	1	68	10 22 540 8	VENTILBLOCK
RUECKSCHLAGVENTIL	11233751	11	1	68	10 22 540 8	VENTILBLOCK
RUECKSCHLAGVENTIL	11270155	3	1	467	59 20 224 14	LASTHALTEVENTIL
RUECKSCHLAGVENTIL	510411614	10	1	465	10 51 959 1	VERROHRUNG HYDR
RUECKSCHLAGVENTIL	510493714	4	1	435	11 26 260 6	WINDE 1 HYDR
RUECKSCHLAGVENTIL	510493714	4	1	441	11 26 261 1	WINDE 2 HYDR
RUECKSCHLAGVENTIL	511419314	22	1	75	11 24 773 5	AGGREGAT HYDR
RUECKSCHLAGVENTIL	511458114	16	4	392	11 25 903 1	VERROHRUNG HYDR
RUECKSCHLAGVENTIL	511458814	5	1	435	11 26 260 6	WINDE 1 HYDR
RUECKSCHLAGVENTIL	511458814	5	1	441	11 26 261 1	WINDE 2 HYDR
RUECKSCHLAGVENTIL	511458814	13	1	547	10 53 146 1	VERROHRUNG HYDR
RUECKSCHLAGVENTIL	511607214	31	1	8	11 29 618 6	OW HYDR
RUECKSCHLAGVENTIL	511631514	41	1	10	11 29 618 6	OW HYDR
RUECKSCHLAGVENTIL	592044714	33	1	8	11 29 618 6	OW HYDR
RUECKSCHLAGVENTIL	592052914	29	1	713	51 00 959 14	BETANKUNGSPUMPE
RUECKSCHLAGVENTIL ENTS	510466114	2	1	689	10 51 728 1	VERROHRUNG HYDR
RUNDSCHLINGE	10222935	92	2	443	10 56 187 5	WERKZEUGAUSRUESTUNG
RUNDSCHLINGE	10280543	27	4	650	11 23 619 7	SELBSTVERLADESYSTEM NR
RUNDSCHLINGE	10350540	17	1	531	11 24 475 9	A-BOCK 2 KPL
RUNDSCHLINGE	790269114	93	1	443	10 56 187 5	WERKZEUGAUSRUESTUNG
RUNDSCHLINGE	790365114	29	1	650	11 23 619 7	SELBSTVERLADESYSTEM NR
RUNDSTAHL	954584908	17	144	408	10 55 876 0	RAUPENTRAEGER RE KPL
RUNDSTAHL	954584908	17	144	417	10 55 876 1	RAUPENTRAEGER LI KPL
SAMMELSCHIENE	10529597	57	1	354	10 55 963 5	SCHALTSCHR X1
SAMMELSCHIENE	11219647	58	1	354	10 55 963 5	SCHALTSCHR X1
SAUGSCHLAUCH	11236511	45	1	167	10 57 532 2	ANSAUGROHR OEL KPL
SAUGSCHLAUCH	11236513	47	1	167	10 57 532 2	ANSAUGROHR OEL KPL
SAUGSCHLAUCH	11236514	43	1	167	10 57 532 2	ANSAUGROHR OEL KPL
SAUGSCHLAUCH	11236515	41	1	167	10 57 532 2	ANSAUGROHR OEL KPL
SAUGSCHLAUCH	11236517	40	1	167	10 57 532 2	ANSAUGROHR OEL KPL
SAUGSCHLAUCH	11236518	46	1	167	10 57 532 2	ANSAUGROHR OEL KPL
SAUGSCHLAUCH	592257814	44	1	167	10 57 532 2	ANSAUGROHR OEL KPL
SCHAEKEL	773930114	19	1	444	10 56 183 8	WERKZEUG
SCHAEKEL	773930114	13	1	606	10 51 743 9	SEILEINZIEHWINDE KPL NRS
SCHAEKEL	773931314	20	1	531	11 24 475 9	A-BOCK 2 KPL
SCHAEKEL	773935814	28	4	650	11 23 619 7	SELBSTVERLADESYSTEM NR

Bezeichnung	Artikel	Pos.	Menge	Blatt	Baugruppe	Bezeichnung
SCHAEKEL	773939214	15	1	522	99 30 800 14	SPITZENENDSCHALTER EINBA
SCHAEKEL	773954514	94	2	443	10 56 187 5	WERKZEUGAUSRUESTUNG
SCHAEKEL	773954714	3	2	415	99 08 357 14	ANHAENGEKETTE
SCHAEKEL	773959914	21	1	531	11 24 475 9	A-BOCK 2 KPL
SCHALLABNAHME	981953714	992	1	4	01 38 281 14	LR 1300 SX
SCHALLDAEMPFER	553187208	10	1	604	11 29 444 5	HEIZUNG NRS
SCHALLGEBER	11226627	83	1	352	11 27 973 6	KABINE EL
SCHALTELEMENT KPL	606655208	1	1	567	92 75 218 08	ENDSCHALTER HUB OBEN
SCHALTER	10013575	35	1	693	70 28 516	SITZRAHMEN
SCHALTER	10445976	1	1	361	69 31 685 14	SICHERHEITSHEBEL KPL
SCHALTER	592291814	121	1	367	10 35 250 8	KABINE
SCHALTERGEHAEUSE	385094414	5	1	359	10 53 171 8	TASTATUR
SCHALTHUELSE	540272214	32	1	615	54 02 703 14	FLANSCH KPL
SCHALTSCHR X1	10559635	8	1	351	11 27 973 6	KABINE EL
SCHARNIER	385204714	5	2	290	10 57 883 5	TUER
SCHARNIER	385204714	5	2	292	10 57 897 6	TUER
SCHARNIER	385204714	8	2	294	10 57 940 0	TUER
SCHARNIER	385204714	8	2	295	10 56 623 7	TUER
SCHARNIER	385204714	5	2	296	10 56 580 8	TUER
SCHARNIER	954560603	15	2	459	10 58 193 7	GITTERROST KPL
SCHEIBE	10522188	4	1	373	59 22 871 14	FRONTSCHEIBE KPL
SCHEIBE	10687926	81	1	358	10 03 610 7	TASTATUR BEDIENPULT X11
SCHEIBE	11293195	7	1	400	10 44 510 2	SCHNELLVERSCHLUSSKUPPL
SCHEIBE	540271214	25	6	613	54 02 701 14	PLANETENSTUFE
SCHEIBE	540271514	29	1	613	54 02 701 14	PLANETENSTUFE
SCHEIBE	540271914	3	1	615	54 02 703 14	FLANSCH KPL
SCHEIBE	540273114	11	1	617	54 02 705 14	ANTRIEB KPL
SCHEIBE	592288214	32	1	373	59 22 871 14	FRONTSCHEIBE KPL
SCHEIBE 10/20X11 S355J2+AR	10562095	70	4	604	11 29 444 5	HEIZUNG NRS
SCHEIBE 10/30X50 S355J2;EN	11249738	11	2	270	11 24 114 4	KRAFTSTOFFANLAGE
SCHEIBE 12/30X30 S355J2;EN	10519789	74	4	264	11 24 114 2	ANSAUGANLAGE LUFT
SCHEIBE 129/102X2 ST 12.03	385151114	6	1	329	99 29 258 14	EZW ROLLENPAKET
SCHEIBE 142/180X2 PA 6 G	11282810	45	8	582	99 38 329 14	SPITZEN AL KPL
SCHEIBE 165/132X1 ST 12.03	385123814	13	2	329	99 29 258 14	EZW ROLLENPAKET
SCHEIBE 165/132X2 ST 12.03	949352914	12	4	329	99 29 258 14	EZW ROLLENPAKET
SCHEIBE 200/103X1 DC01;EN	385255414	22	4	665	11 89 568 6	SELBSTVERLADESYSTEM NR
SCHEIBE 200/103X2 DC01;EN	385255314	21	4	665	11 89 568 6	SELBSTVERLADESYSTEM NR
SCHEIBE 200/103X4 S235JR;E	385255514	23	4	665	11 89 568 6	SELBSTVERLADESYSTEM NR
SCHEIBE 21/37X4 PA 6 G	948967314	3	4	516	11 28 357 6	MONTAGETEILE
SCHEIBE 225/81X26 PA 6 G	970855603	6	2	475	99 14 137 14	UMLENKROLLE KPL
SCHEIBE 25.2/32X3 POM	958471614	18	1	290	10 57 883 5	TUER
SCHEIBE 25.2/32X3 POM	958471614	18	1	292	10 57 897 6	TUER
SCHEIBE 25.2/32X3 POM	958471614	7	1	294	10 57 940 0	TUER
SCHEIBE 25.2/32X3 POM	958471614	7	1	295	10 56 623 7	TUER
SCHEIBE 25.2/32X3 POM	958471614	15	1	296	10 56 580 8	TUER
SCHEIBE 36/50X3 PA 6 G	11223999	20	2	544	10 53 145 5	RUECKFALLSTUETZE NADEL
SCHEIBE 36X40X12 S355J2H;E	956858014	45	3	570	11 28 774 6	MONTAGETEILE
SCHEIBE 46/70X2 POLYAMID	10593096	23	8	64	10 51 969 4	A-BOCK AUFRICHTZYL EINBA
SCHEIBE 52/92X1 PA 6 G	11241005	22	16	64	10 51 969 4	A-BOCK AUFRICHTZYL EINBA
SCHEIBE 52/92X3 PA 6 G	949740514	15	20	64	10 51 969 4	A-BOCK AUFRICHTZYL EINBA
SCHEIBE 53/10X5 AISI 316	10567619	13	2	254	11 24 114 0	KUEHLER EINBAU WASSER
SCHEIBE 58/90X2 GUMMI NBR	949942814	7	8	493	91 85 910 14	HALTESTANGE KPL
SCHEIBE 58/90X2 GUMMI NBR	949942814	7	8	501	91 85 911 14	HALTESTANGE KPL
SCHEIBE 58/90X2 GUMMI NBR	949942814	7	16	507	99 03 609 14	HALTESTANGE KPL
SCHEIBE 58/90X2 GUMMI NBR	949942814	39	4	512	11 28 629 9	MONTAGETEILE
SCHEIBE 58/90X2 GUMMI NBR	949942814	17	20	571	99 26 362 14	HALTESTANGE KPL
SCHEIBE 81/105X2 PA 6 G	957900214	35	16	582	99 38 329 14	SPITZEN AL KPL
SCHEIBE 81/120X15 PA 6 G	289022714	37	2	582	99 38 329 14	SPITZEN AL KPL
SCHEIBE 81/200X74 PA 6 G	948773814	5	16	475	99 14 137 14	UMLENKROLLE KPL
SCHEIBE 9/16X25 S355J2C;EN	10553403	46	6	275	11 24 114 5	ANLAGE HARNSTOFF EINBAU

Bezeichnung	Artikel	Pos.	Menge	Blatt	Baugruppe	Bezeichnung
SCHEIBE 96/120X2 PA 6 G	289073714	13	5	529	11 29 649 2	BOLZEN KPL
SCHEIBE 96/140X5 PA 6 G	289073814	14	3	529	11 29 649 2	BOLZEN KPL
SCHEIBE AEHNL.ISO 7089 16 P	420053101	50	20	621	10 55 372 1	DACHGELAENDER NRS
SCHEIBE DIN 34816 10.5 PA 6.	485568514	9	4	333	99 29 392 14	SEITENTEIL
SCHEIBE DIN 34816 10.5 PA 6.	485568514	17	12	335	99 29 386 14	KONSOLE KPL
SCHEIBE DIN 34816 10.5 PA 6.	485568514	17	12	336	99 29 434 14	KONSOLE KPL
SCHEIBE DIN 34816 10.5 PA 6.	485568514	14	2	491	11 28 794 6	TRANSPORTSICHERUNG
SCHEIBE DIN 34816 10.5 PA 6.	485568514	14	2	557	11 28 982 7	TRANSPORTSICHERUNG
SCHEIBE DIN 440 R11 ST	420600408	13	6	60	10 56 067 3	BATTERIE EINBAU KPL
SCHEIBE DIN 6340 10.5 C35	421300214	72	4	44	10 56 070 1	TANK HYDR KPL
SCHEIBE DIN 6340 10.5 C35	421300214	71	4	165	10 51 948 1	ANSAUGROHR OEL
SCHEIBE DIN 6340 10.5 C35	421300214	74	24	255	11 24 114 0	KUEHLER EINBAU WASSER
SCHEIBE DIN 6340 10.5 C35	421300214	71	22	261	11 24 114 1	KUEHLER EINBAU LADELUFT
SCHEIBE DIN 6340 10.5 C35	421300214	72	6	264	11 24 114 2	ANSAUGANLAGE LUFT
SCHEIBE DIN 6340 10.5 C35	421300214	71	28	268	11 24 114 3	ABGASANLAGE
SCHEIBE DIN 6340 10.5 C35	421300214	94	12	276	11 24 114 5	ANLAGE HARNSTOFF EINBAU
SCHEIBE DIN 6340 10.5 C35	421300214	72	2	280	11 24 114 6	ABDECKUNG
SCHEIBE DIN 6340 13 ST	4635283	73	12	165	10 51 948 1	ANSAUGROHR OEL
SCHEIBE DIN 6340 13 ST	4635283	72	8	268	11 24 114 3	ABGASANLAGE
SCHEIBE DIN 6340 13 ST	4635283	95	2	276	11 24 114 5	ANLAGE HARNSTOFF EINBAU
SCHEIBE DIN 6340 17 C35	421300414	70	3	42	10 56 070 0	TANK HYDR EINBAU
SCHEIBE DIN 6340 17 C35	421300414	70	3	47	10 56 073 2	KRAFTSTOFFTANK EINBAU
SCHEIBE DIN 6340 21 C35	10567956	5	8	408	10 55 876 0	RAUPENTRAEGER RE KPL
SCHEIBE DIN 6340 21 C35	10567956	5	8	417	10 55 876 1	RAUPENTRAEGER LI KPL
SCHEIBE DIN 6340 25	883203014	73	2	164	11 24 113 8	MOTORLAGER KPL
SCHEIBE DIN 6340 8.4 C35	421300514	77	4	164	11 24 113 8	MOTORLAGER KPL
SCHEIBE DIN 6340 8.4 C35	421300514	72	20	255	11 24 114 0	KUEHLER EINBAU WASSER
SCHEIBE DIN 6340 8.4 C35	421300514	70	28	261	11 24 114 1	KUEHLER EINBAU LADELUFT
SCHEIBE DIN 6340 8.4 C35	421300514	70	4	262	11 28 574 7	WP
SCHEIBE DIN 6340 8.4 C35	421300514	71	4	264	11 24 114 2	ANSAUGANLAGE LUFT
SCHEIBE DIN 6340 8.4 C35	421300514	73	4	604	11 29 444 5	HEIZUNG NRS
SCHEIBE DIN 6916 17 C45	460024203	16	2	320	10 51 968 6	EZW OW EINBAU KPL
SCHEIBE DIN 6916 17 C45	460024203	8	8	333	99 29 392 14	SEITENTEIL
SCHEIBE DIN 6916 17 C45	460024203	15	6	335	99 29 386 14	KONSOLE KPL
SCHEIBE DIN 6916 17 C45	460024203	15	6	336	99 29 434 14	KONSOLE KPL
SCHEIBE DIN 6916 21 C45	460022203	11	48	341	10 51 968 2	DW OW
SCHEIBE DIN 6916 21 C45	460022203	42	2	582	99 38 329 14	SPITZEN AL KPL
SCHEIBE DIN 6916 25 C45	460014603	74	2	164	11 24 113 8	MOTORLAGER KPL
SCHEIBE DIN 6916 25 C45	460014603	9	45	408	10 55 876 0	RAUPENTRAEGER RE KPL
SCHEIBE DIN 6916 25 C45	460014603	9	45	417	10 55 876 1	RAUPENTRAEGER LI KPL
SCHEIBE DIN 7349 17 ST	421600901	53	54	408	10 55 876 0	RAUPENTRAEGER RE KPL
SCHEIBE DIN 7349 17 ST	421600901	53	54	417	10 55 876 1	RAUPENTRAEGER LI KPL
SCHEIBE DIN 7349 31	4600667	48	2	541	11 29 938 4	MONTAGETEILE
SCHEIBE DIN 7349 6.4	4000648	70	9	254	11 24 114 0	KUEHLER EINBAU WASSER
SCHEIBE DIN 7989 11 ST	421700508	88	48	304	11 24 483 7	BEF-TEILE OW
SCHEIBE DIN 7989-B 18 ST;	421700314	36	4	75	11 24 773 5	AGGREGAT HYDR
SCHEIBE DIN EN 28738 20 ST;	421101714	5	2	516	11 28 357 6	MONTAGETEILE
SCHEIBE DIN EN 28738 20 ST;	421101714	36	2	637	99 10 116 14	SEILFUEHRUNG
SCHEIBE DIN EN 28738 20 ST;	421101714	4	1	642	99 06 789 14	GABEL
SCHEIBE DIN EN 28738 22 ST;	421101814	3	2	414	10 50 179 5	AUFSTIEG KPL
SCHEIBE DIN EN 28738 26 ST;	421102214	24	8	58	10 58 163 4	KABINENAUFHAENGUNG KPL
SCHEIBE DIN EN 28738 26 ST;	421102214	3	4	63	99 23 451 14	ANLENKBOLZEN EINBAU
SCHEIBE DIN EN 28738 26 ST;	421102214	36	2	512	11 28 629 9	MONTAGETEILE
SCHEIBE DIN EN 28738 30 ST;	421102414	20	10	473	11 24 444 4	A-BOCK 1 KPL
SCHEIBE DIN EN 28738 30 ST;	421102414	33	2	582	99 38 329 14	SPITZEN AL KPL
SCHEIBE DIN EN 28738 32 ST;	421102614	16	2	544	10 53 145 5	RUECKFALLSTUETZE NADEL
SCHEIBE DIN EN 28738 35 ST;	421102814	51	2	570	11 28 774 6	MONTAGETEILE
SCHEIBE DIN EN 28738 35 ST;	421102814	18	2	633	10 51 176 9	ZWISCHENHUB NADEL AL KP
SCHEIBE DIN EN 28738 36 ST;	421102914	46	2	637	99 10 116 14	SEILFUEHRUNG
SCHEIBE DIN EN 28738 36 ST;	421102914	3	12	639	99 23 405 14	ZWISCHENABSPANNUNG NR

Bezeichnung	Artikel	Pos.	Menge	Blatt	Baugruppe	Bezeichnung
SCHEIBE DIN EN 28738 36 ST;	421102914	3	12	641	99 23 420 14	ZWISCHENABSPANNUNG NR
SCHEIBE DIN EN 28738 36 ST;	421102914	6	14	643	97 05 997 03	ZWISCHENABSPANNUNG NR
SCHEIBE DIN EN 28738 40 ST	421103014	14	3	58	10 58 163 4	KABINENAUFHAENGUNG KPL
SCHEIBE DIN EN 28738 40 ST	421103014	78	4	164	11 24 113 8	MOTORLAGER KPL
SCHEIBE DIN EN 28738 40 ST	421103014	18	8	311	10 51 969 7	NADELEINZIEHWINDE
SCHEIBE DIN EN 28738 40 ST	421103014	27	6	535	99 26 359 14	HALTESTANGE KPL
SCHEIBE DIN EN 28738 40 ST	421103014	17	8	544	10 53 145 5	RUECKFALLSTUETZE NADEL
SCHEIBE DIN EN 28738 40 ST	421103014	12	2	577	99 48 521 14	SPITZEN AL KPL
SCHEIBE DIN EN 28738 45 ST;	421103214	19	2	64	10 51 969 4	A-BOCK AUFRICHTZYL EINBA
SCHEIBE DIN EN 28738 45 ST;	421103214	37	4	512	11 28 629 9	MONTAGETEILE
SCHEIBE DIN EN 28738 45 ST;	421103214	53	1	533	11 29 426 7	MONTAGETEILE
SCHEIBE DIN EN 28738 45 ST;	421103214	37	2	541	11 29 938 4	MONTAGETEILE
SCHEIBE DIN EN 28738 45 ST;	421103214	52	8	570	11 28 774 6	MONTAGETEILE
SCHEIBE DIN EN 28738 45 ST;	421103214	13	4	577	99 48 521 14	SPITZEN AL KPL
SCHEIBE DIN EN 28738 50 ST;	421103314	28	12	577	99 48 521 14	SPITZEN AL KPL
SCHEIBE DIN EN 28738 50 ST;	421103314	20	1	650	11 23 619 7	SELBSTVERLADESYSTEM NR
SCHEIBE DIN EN 28738 55 ST;	421103414	1	4	493	91 85 910 14	HALTESTANGE KPL
SCHEIBE DIN EN 28738 55 ST;	421103414	1	2	501	91 85 911 14	HALTESTANGE KPL
SCHEIBE DIN EN 28738 55 ST;	421103414	1	8	507	99 03 609 14	HALTESTANGE KPL
SCHEIBE DIN EN 28738 55 ST;	421103414	38	16	512	11 28 629 9	MONTAGETEILE
SCHEIBE DIN EN 28738 55 ST;	421103414	71	2	525	11 24 336 5	ANLENKSTUECK NADEL KPL
SCHEIBE DIN EN 28738 55 ST;	421103414	28	12	535	99 26 359 14	HALTESTANGE KPL
SCHEIBE DIN EN 28738 55 ST;	421103414	19	4	542	10 59 968 1	HALTESTANGE KPL
SCHEIBE DIN EN 28738 55 ST;	421103414	14	12	571	99 26 362 14	HALTESTANGE KPL
SCHEIBE DIN EN 28738 55 ST;	421103414	14	1	577	99 48 521 14	SPITZEN AL KPL
SCHEIBE DIN EN 28738 60 ST;	421103514	29	4	535	99 26 359 14	HALTESTANGE KPL
SCHEIBE DIN EN 28738 60 ST;	421103514	21	12	542	10 59 968 1	HALTESTANGE KPL
SCHEIBE DIN EN 28738 60 ST;	421103514	22	4	571	99 26 362 14	HALTESTANGE KPL
SCHEIBE DIN EN 28738 60 ST;	421103514	42	2	637	99 10 116 14	SEILFUEHRUNG
SCHEIBE DIN EN 28738 60 ST;	421103514	24	12	644	10 51 971 3	SELBSTVERLADESYSTEM NR
SCHEIBE DIN EN 28738 65 ST;	421103614	18	6	309	99 29 803 14	VERZURRUNG BALLAST
SCHEIBE DIN EN 28738 65 ST;	421103614	13	4	460	99 30 060 14	HALTESTANGE KPL
SCHEIBE DIN EN 28738 65 ST;	421103614	13	4	492	99 24 404 14	HALTESTANGE KPL
SCHEIBE DIN EN 28738 65 ST;	421103614	13	4	500	99 24 405 14	HALTESTANGE KPL
SCHEIBE DIN EN 28738 65 ST;	421103614	13	8	506	99 24 406 14	HALTESTANGE KPL
SCHEIBE DIN EN 28738 65 ST;	421103614	13	4	519	99 24 594 14	HALTESTANGE KPL
SCHEIBE DIN EN 28738 65 ST;	421103614	11	2	528	11 28 852 3	BOLZEN KPL
SCHEIBE DIN EN 28738 65 ST;	421103614	19	8	633	10 51 176 9	ZWISCHENHUB NADEL AL KP
SCHEIBE DIN EN 28738 75 ST;	421103714	14	8	476	99 26 417 14	HALTESTANGE KPL
SCHEIBE DIN EN 28738 75 ST;	421103714	16	16	519	99 24 594 14	HALTESTANGE KPL
SCHEIBE DIN EN 28738 80 ST;	421103814	12	8	450	11 23 820 3	ANLENKSTUECK KPL
SCHEIBE DIN EN 28738 80 ST;	421103814	11	2	483	11 28 726 4	BOLZEN KPL
SCHEIBE DIN EN 28738 80 ST;	421103814	29	1	582	99 38 329 14	SPITZEN AL KPL
SCHEIBE DIN EN 28738 80 ST;	421103814	20	2	644	10 51 971 3	SELBSTVERLADESYSTEM NR
SCHEIBE EN 14399-6 12 C45	460022703	37	14	75	11 24 773 5	AGGREGAT HYDR
SCHEIBE EN 14399-6 12 C45	460022703	89	34	304	11 24 483 7	BEF-TEILE OW
SCHEIBE EN 14399-6 12 C45	460022703	5	4	332	99 29 389 14	SEITENTEIL
SCHEIBE EN 14399-6 12 C45	460022703	5	4	333	99 29 392 14	SEITENTEIL
SCHEIBE EN 14399-6 12 C45	460022703	14	16	335	99 29 386 14	KONSOLE KPL
SCHEIBE EN 14399-6 12 C45	460022703	14	16	336	99 29 434 14	KONSOLE KPL
SCHEIBE EN 14399-6 30 ST	421500614	7	30	408	10 55 876 0	RAUPENTRAEGER RE KPL
SCHEIBE EN 14399-6 30 ST	421500614	7	30	417	10 55 876 1	RAUPENTRAEGER LI KPL
SCHEIBE ISO 7089	11219067	7	2	272	10 55 091 1	KRAFTSTOFFVORFILTER AN
SCHEIBE ISO 7089 10 A4	420001114	15	8	41	10 51 961 6	OELKUEHLER EINBAU
SCHEIBE ISO 7089 10 A4	420001114	70	44	44	10 56 070 1	TANK HYDR KPL
SCHEIBE ISO 7089 10 A4	420001114	70	6	48	10 56 073 3	KRAFTSTOFFTANK KPL
SCHEIBE ISO 7089 10 A4	420001114	18	4	60	10 56 067 3	BATTERIE EINBAU KPL
SCHEIBE ISO 7089 10 A4	420001114	4	8	62	10 56 069 4	MODULE EINBAU
SCHEIBE ISO 7089 10 A4	420001114	70	42	164	11 24 113 8	MOTORLAGER KPL
SCHEIBE ISO 7089 10 A4	420001114	70	4	165	10 51 948 1	ANSAUGROHR OEL

Bezeichnung	Artikel	Pos.	Menge	Blatt	Baugruppe	Bezeichnung
SCHEIBE ISO 7089 10 A4	420001114	70	6	167	10 57 532 2	ANSAUGROHR OEL KPL
SCHEIBE ISO 7089 10 A4	420001114	73	28	255	11 24 114 0	KUEHLER EINBAU WASSER
SCHEIBE ISO 7089 10 A4	420001114	70	2	268	11 24 114 3	ABGASANLAGE
SCHEIBE ISO 7089 10 A4	420001114	97	4	276	11 24 114 5	ANLAGE HARNSTOFF EINBAU
SCHEIBE ISO 7089 10 A4	420001114	71	11	280	11 24 114 6	ABDECKUNG
SCHEIBE ISO 7089 10 A4	420001114	55	40	284	11 24 409 0	VERKLEIDUNG OW EINBAU KP
SCHEIBE ISO 7089 10 A4	420001114	12	36	298	10 54 591 0	MOTORABDECKUNG
SCHEIBE ISO 7089 10 A4	420001114	78	53	304	11 24 483 7	BEF-TEILE OW
SCHEIBE ISO 7089 10 A4	420001114	14	16	308	10 52 656 0	MONTAGETEILE
SCHEIBE ISO 7089 10 A4	420001114	27	6	350	11 29 327 3	KABINE KPL
SCHEIBE ISO 7089 10 A4	420001114	65	36	450	11 23 820 3	ANLENKSTUECK KPL
SCHEIBE ISO 7089 10 A4	420001114	13	2	479	99 29 588 14	AUFLAGE
SCHEIBE ISO 7089 10 A4	420001114	13	4	480	10 35 063 3	HALTERUNG
SCHEIBE ISO 7089 10 A4	420001114	16	4	487	11 28 397 7	AUFFANGWANNE KPL
SCHEIBE ISO 7089 10 A4	420001114	16	4	488	11 28 397 8	AUFFANGWANNE KPL
SCHEIBE ISO 7089 10 A4	420001114	16	8	489	11 28 399 5	AUFFANGWANNE KPL
SCHEIBE ISO 7089 10 A4	420001114	16	8	490	11 28 399 7	AUFFANGWANNE KPL
SCHEIBE ISO 7089 10 A4	420001114	15	4	491	11 28 794 6	TRANSPORTSICHERUNG
SCHEIBE ISO 7089 10 A4	420001114	22	1	515	10 59 863 3	PENDEL KPL
SCHEIBE ISO 7089 10 A4	420001114	4	8	516	11 28 357 6	MONTAGETEILE
SCHEIBE ISO 7089 10 A4	420001114	10	2	522	99 30 800 14	SPITZENENDSCHALTER EINBA
SCHEIBE ISO 7089 10 A4	420001114	15	4	557	11 28 982 7	TRANSPORTSICHERUNG
SCHEIBE ISO 7089 10 A4	420001114	49	4	570	11 28 774 6	MONTAGETEILE
SCHEIBE ISO 7089 10 A4	420001114	17	8	577	99 48 521 14	SPITZEN AL KPL
SCHEIBE ISO 7089 10 A4	420001114	37	32	621	10 55 372 1	DACHGELAENDER NRS
SCHEIBE ISO 7089 10 A4	420001114	16	6	637	99 10 116 14	SEILFUEHRUNG
SCHEIBE ISO 7089 10 A4	420001114	12	6	705	11 26 771 6	MONTAGETEILE
SCHEIBE ISO 7089 10 ST	10554336	70	1	169	11 24 113 9	MOTORVORMONTAGE
SCHEIBE ISO 7089 12 A4	420001514	10	1	31	10 53 048 9	SICHERUNGSHALTER
SCHEIBE ISO 7089 12 A4	420001514	71	12	44	10 56 070 1	TANK HYDR KPL
SCHEIBE ISO 7089 12 A4	420001514	20	2	58	10 58 163 4	KABINENAUFHAENGUNG KPL
SCHEIBE ISO 7089 12 A4	420001514	11	2	60	10 56 067 3	BATTERIE EINBAU KPL
SCHEIBE ISO 7089 12 A4	420001514	76	4	164	11 24 113 8	MOTORLAGER KPL
SCHEIBE ISO 7089 12 A4	420001514	70	20	168	10 58 017 0	RUECKLAUFROHR
SCHEIBE ISO 7089 12 A4	420001514	72	3	261	11 24 114 1	KUEHLER EINBAU LADELUFT
SCHEIBE ISO 7089 12 A4	420001514	8	2	385	10 53 756 0	LEUCHTENHALTER KPL
SCHEIBE ISO 7089 12 A4	420001514	23	15	408	10 55 876 0	RAUPENTRAEGER RE KPL
SCHEIBE ISO 7089 12 A4	420001514	23	15	417	10 55 876 1	RAUPENTRAEGER LI KPL
SCHEIBE ISO 7089 12 A4	420001514	23	24	419	11 23 548 1	MITTELTEIL KPL
SCHEIBE ISO 7089 12 A4	420001514	22	16	450	11 23 820 3	ANLENKSTUECK KPL
SCHEIBE ISO 7089 12 A4	420001514	25	12	525	11 24 336 5	ANLENKSTUECK NADEL KPL
SCHEIBE ISO 7089 12 A4	420001514	34	8	526	10 53 140 9	ANLENKSTUECK EL
SCHEIBE ISO 7089 12 A4	420001514	47	8	541	11 29 938 4	MONTAGETEILE
SCHEIBE ISO 7089 12 A4	420001514	18	2	577	99 48 521 14	SPITZEN AL KPL
SCHEIBE ISO 7089 12 A4	420001514	49	10	621	10 55 372 1	DACHGELAENDER NRS
SCHEIBE ISO 7089 12 A4	420001514	25	2	686	10 58 064 7	VIDEOUEBERWACHUNGSANL
SCHEIBE ISO 7089 13	10289804	8	17	242	10 11 557 7	SCHWUNGRADGEHAEUSE AN
SCHEIBE ISO 7089 16	10544172	72	48	164	11 24 113 8	MOTORLAGER KPL
SCHEIBE ISO 7089 16	10544172	102	2	304	11 24 483 7	BEF-TEILE OW
SCHEIBE ISO 7089 16	10544172	14	4	341	10 51 968 2	DW OW
SCHEIBE ISO 7089 16	10544172	36	12	408	10 55 876 0	RAUPENTRAEGER RE KPL
SCHEIBE ISO 7089 16	10544172	36	12	417	10 55 876 1	RAUPENTRAEGER LI KPL
SCHEIBE ISO 7089 16	10544172	15	28	419	11 23 548 1	MITTELTEIL KPL
SCHEIBE ISO 7089 16	10544172	43	8	450	11 23 820 3	ANLENKSTUECK KPL
SCHEIBE ISO 7089 16	10544172	26	4	485	11 28 390 8	AL BEGEHUNG
SCHEIBE ISO 7089 16	10544172	26	4	499	11 28 583 8	AL BEGEHUNG
SCHEIBE ISO 7089 16	10544172	26	4	505	11 28 626 1	AL BEGEHUNG
SCHEIBE ISO 7089 16	10544172	51	2	533	11 29 426 7	MONTAGETEILE
SCHEIBE ISO 7089 16	10544172	20	8	665	11 89 568 6	SELBSTVERLADESYSTEM NR
SCHEIBE ISO 7089 17/30X3 A4	4901893	71	4	169	11 24 113 9	MOTORVORMONTAGE

Bezeichnung	Artikel	Pos.	Menge	Blatt	Baugruppe	Bezeichnung
SCHEIBE ISO 7089 20	10544174	75	2	264	11 24 114 2	ANSAUGANLAGE LUFT
SCHEIBE ISO 7089 20	10544174	21	2	408	10 55 876 0	RAUPENTRAEGER RE KPL
SCHEIBE ISO 7089 20	10544174	21	2	417	10 55 876 1	RAUPENTRAEGER LI KPL
SCHEIBE ISO 7089 20	10544174	19	4	419	11 23 548 1	MITTELTEIL KPL
SCHEIBE ISO 7089 20	10544174	14	4	424	11 22 050 0	WINDEN EINBAU
SCHEIBE ISO 7089 20	10544174	14	4	439	11 22 050 1	WINDEN EINBAU
SCHEIBE ISO 7089 20	10544174	15	8	473	11 24 444 4	A-BOCK 1 KPL
SCHEIBE ISO 7089 20	10544174	17	8	606	10 51 743 9	SEILEINZIEHWINDE KPL NRS
SCHEIBE ISO 7089 20	10544174	4	1	640	99 10 125 14	GABEL
SCHEIBE ISO 7089 24	10544176	33	12	408	10 55 876 0	RAUPENTRAEGER RE KPL
SCHEIBE ISO 7089 24	10544176	33	12	417	10 55 876 1	RAUPENTRAEGER LI KPL
SCHEIBE ISO 7089 27	420002601	29	4	637	99 10 116 14	SEILFUEHRUNG
SCHEIBE ISO 7089 3 A4	485546414	6	4	386	11 30 962 5	HALTER KPL
SCHEIBE ISO 7089 30	10544177	28	64	408	10 55 876 0	RAUPENTRAEGER RE KPL
SCHEIBE ISO 7089 30	10544177	13	4	410	10 55 716 2	LEITRAD KPL
SCHEIBE ISO 7089 30	10544177	28	64	417	10 55 876 1	RAUPENTRAEGER LI KPL
SCHEIBE ISO 7089 36 MS;	420051514	24	4	582	99 38 329 14	SPITZEN AL KPL
SCHEIBE ISO 7089 4 A4	420000314	4	3	384	97 07 857 03	LIBELLE EINBAU
SCHEIBE ISO 7089 42	420003714	36	4	473	11 24 444 4	A-BOCK 1 KPL
SCHEIBE ISO 7089 42	420003714	13	2	491	11 28 794 6	TRANSPORTSICHERUNG
SCHEIBE ISO 7089 42	420003714	27	10	521	99 23 398 14	ROLLENSATZ
SCHEIBE ISO 7089 42	420003714	13	2	557	11 28 982 7	TRANSPORTSICHERUNG
SCHEIBE ISO 7089 48	420004001	53	2	570	11 28 774 6	MONTAGETEILE
SCHEIBE ISO 7089 48	420004001	15	2	582	99 38 329 14	SPITZEN AL KPL
SCHEIBE ISO 7089 48	420004001	15	2	631	91 92 763 14	HAKENBETRIEB 2 NRS
SCHEIBE ISO 7089 5 A4	420005214	13	2	53	11 26 557 2	MONTAGETEILE
SCHEIBE ISO 7089 5 A4	420005214	11	8	61	11 31 093 2	ENDSCHALTER EINBAU
SCHEIBE ISO 7089 5 A4	420005214	5	40	62	10 56 069 4	MODULE EINBAU
SCHEIBE ISO 7089 5 A4	420005214	90	2	276	11 24 114 5	ANLAGE HARNSTOFF EINBAU
SCHEIBE ISO 7089 5 A4	420005214	63	16	450	11 23 820 3	ANLENKSTUECK KPL
SCHEIBE ISO 7089 5 A4	420005214	33	8	512	11 28 629 9	MONTAGETEILE
SCHEIBE ISO 7089 5 A4	420005214	14	16	513	11 28 610 5	ARRETIERUNG KPL
SCHEIBE ISO 7089 5 A4	420005214	32	9	665	11 89 568 6	SELBSTVERLADESYSTEM NR
SCHEIBE ISO 7089 56	420004501	18	8	542	10 59 968 1	HALTESTANGE KPL
SCHEIBE ISO 7089 6 A4	420000414	60	4	34	10 56 645 8	KLEMMKASTEN
SCHEIBE ISO 7089 6 A4	420000414	91	33	276	11 24 114 5	ANLAGE HARNSTOFF EINBAU
SCHEIBE ISO 7089 6 A4	420000414	44	10	284	11 24 409 0	VERKLEIDUNG OW EINBAU KP
SCHEIBE ISO 7089 6 A4	420000414	23	18	350	11 29 327 3	KABINE KPL
SCHEIBE ISO 7089 6 A4	420000414	7	8	385	10 53 756 0	LEUCHTENHALTER KPL
SCHEIBE ISO 7089 6 A4	420000414	50	6	408	10 55 876 0	RAUPENTRAEGER RE KPL
SCHEIBE ISO 7089 6 A4	420000414	50	6	417	10 55 876 1	RAUPENTRAEGER LI KPL
SCHEIBE ISO 7089 6 A4	420000414	30	24	419	11 23 548 1	MITTELTEIL KPL
SCHEIBE ISO 7089 6 A4	420000414	12	3	424	11 22 050 0	WINDEN EINBAU
SCHEIBE ISO 7089 6 A4	420000414	12	3	439	11 22 050 1	WINDEN EINBAU
SCHEIBE ISO 7089 6 A4	420000414	64	56	450	11 23 820 3	ANLENKSTUECK KPL
SCHEIBE ISO 7089 6 A4	420000414	12	36	459	10 58 193 7	GITTERROST KPL
SCHEIBE ISO 7089 6 A4	420000414	29	18	473	11 24 444 4	A-BOCK 1 KPL
SCHEIBE ISO 7089 6 A4	420000414	17	1	487	11 28 397 7	AUFFANGWANNE KPL
SCHEIBE ISO 7089 6 A4	420000414	17	1	488	11 28 397 8	AUFFANGWANNE KPL
SCHEIBE ISO 7089 6 A4	420000414	17	1	489	11 28 399 5	AUFFANGWANNE KPL
SCHEIBE ISO 7089 6 A4	420000414	17	1	490	11 28 399 7	AUFFANGWANNE KPL
SCHEIBE ISO 7089 6 A4	420000414	69	12	525	11 24 336 5	ANLENKSTUECK NADEL KPL
SCHEIBE ISO 7089 6 A4	420000414	24	4	526	10 53 140 9	ANLENKSTUECK EL
SCHEIBE ISO 7089 6 A4	420000414	12	8	550	99 31 679 14	ABSTUETZUNG KPL
SCHEIBE ISO 7089 6 A4	420000414	46	4	570	11 28 774 6	MONTAGETEILE
SCHEIBE ISO 7089 6 A4	420000414	3	10	599	11 22 322 6	MODEM KPL NRS
SCHEIBE ISO 7089 6 A4	420000414	71	2	604	11 29 444 5	HEIZUNG NRS
SCHEIBE ISO 7089 6 A4	420000414	26	2	606	10 51 743 9	SEILEINZIEHWINDE KPL NRS
SCHEIBE ISO 7089 6 A4	420000414	34	34	621	10 55 372 1	DACHGELAENDER NRS
SCHEIBE ISO 7089 6 A4	420000414	18	6	680	11 22 344 2	KAMERA EINBAU

Bezeichnung	Artikel	Pos.	Menge	Blatt	Baugruppe	Bezeichnung
SCHEIBE ISO 7089 8 A4	420001014	14	4	53	11 26 557 2	MONTAGETEILE
SCHEIBE ISO 7089 8 A4	420001014	67	6	58	10 58 163 4	KABINENAUFHAENGUNG KPL
SCHEIBE ISO 7089 8 A4	420001014	75	16	164	11 24 113 8	MOTORLAGER KPL
SCHEIBE ISO 7089 8 A4	420001014	71	6	255	11 24 114 0	KUEHLER EINBAU WASSER
SCHEIBE ISO 7089 8 A4	420001014	70	4	264	11 24 114 2	ANSAUGANLAGE LUFT
SCHEIBE ISO 7089 8 A4	420001014	70	4	270	11 24 114 4	KRAFTSTOFFANLAGE
SCHEIBE ISO 7089 8 A4	420001014	92	26	276	11 24 114 5	ANLAGE HARNSTOFF EINBAU
SCHEIBE ISO 7089 8 A4	420001014	34	21	282	11 24 409 0	VERKLEIDUNG OW EINBAU KP
SCHEIBE ISO 7089 8 A4	420001014	16	12	298	10 54 591 0	MOTORABDECKUNG
SCHEIBE ISO 7089 8 A4	420001014	87	26	304	11 24 483 7	BEF-TEILE OW
SCHEIBE ISO 7089 8 A4	420001014	14	2	311	10 51 969 7	NADELEINZIEHWINDE
SCHEIBE ISO 7089 8 A4	420001014	17	6	341	10 51 968 2	DW OW
SCHEIBE ISO 7089 8 A4	420001014	20	28	350	11 29 327 3	KABINE KPL
SCHEIBE ISO 7089 8 A4	420001014	5	2	386	11 30 962 5	HALTER KPL
SCHEIBE ISO 7089 8 A4	420001014	12	6	419	11 23 548 1	MITTELTEIL KPL
SCHEIBE ISO 7089 8 A4	420001014	44	18	450	11 23 820 3	ANLENKSTUECK KPL
SCHEIBE ISO 7089 8 A4	420001014	14	8	461	99 34 198 14	SCHILD LIEBHERR
SCHEIBE ISO 7089 8 A4	420001014	22	4	470	11 27 536 5	RUECKFALLSTUETZEN EINBA
SCHEIBE ISO 7089 8 A4	420001014	15	4	495	11 23 292 2	AUFLAGE KPL
SCHEIBE ISO 7089 8 A4	420001014	13	4	522	99 30 800 14	SPITZENENDSCHALTER EINBA
SCHEIBE ISO 7089 8 A4	420001014	61	4	525	11 24 336 5	ANLENKSTUECK NADEL KPL
SCHEIBE ISO 7089 8 A4	420001014	38	2	541	11 29 938 4	MONTAGETEILE
SCHEIBE ISO 7089 8 A4	420001014	48	6	570	11 28 774 6	MONTAGETEILE
SCHEIBE ISO 7089 8 A4	420001014	35	14	577	99 48 521 14	SPITZEN AL KPL
SCHEIBE ISO 7089 8 A4	420001014	72	10	604	11 29 444 5	HEIZUNG NRS
SCHEIBE ISO 7089 8 A4	420001014	48	82	621	10 55 372 1	DACHGELAENDER NRS
SCHEIBE ISO 7089 8 A4	420001014	13	12	623	11 24 147 8	UW PODEST
SCHEIBE ISO 7089 8 A4	420001014	19	4	665	11 89 568 6	SELBSTVERLADESYSTEM NR
SCHEIBE ISO 7089 8 A4	420001014	28	6	686	10 58 064 7	VIDEOUEBERWACHUNGSANL
SCHEIBE ISO 7089 8 A4	420001014	7	1	687	10 57 848 6	MONITOR KABINE ANBAU
SCHEIBE ISO 7089 8 A4	420001014	7	4	698	11 22 037 2	FUSSPEDAL EL EINBAU
SCHEIBE ISO 7089 8 A4	420001014	15	3	706	10 52 293 0	DW GEBER NRS
SCHEIBE ISO 7089 8 A4	420001014	14	2	710	10 52 155 4	BETANKUNGSANLAGE NRS
SCHEIBE ISO 7092 6 CU;	420250114	6	4	706	10 52 293 0	DW GEBER NRS
SCHEIBE ISO 7093-1 10 A4	10540511	14	14	41	10 51 961 6	OELKUEHLER EINBAU
SCHEIBE ISO 7093-1 10 A4	10540511	7	2	50	10 55 268 1	MITNEHMER EINBAU
SCHEIBE ISO 7093-1 10 A4	10540511	55	4	58	10 58 163 4	KABINENAUFHAENGUNG KPL
SCHEIBE ISO 7093-1 10 A4	10540511	4	4	60	10 56 067 3	BATTERIE EINBAU KPL
SCHEIBE ISO 7093-1 10 A4	10540511	70	51	280	11 24 114 6	ABDECKUNG
SCHEIBE ISO 7093-1 10 A4	10540511	26	134	282	11 24 409 0	VERKLEIDUNG OW EINBAU KP
SCHEIBE ISO 7093-1 10 A4	10540511	26	89	300	11 24 922 2	ABDECKUNG UNTERSEITE
SCHEIBE ISO 7093-1 10 A4	10540511	77	125	304	11 24 483 7	BEF-TEILE OW
SCHEIBE ISO 7093-1 10 A4	10540511	40	8	350	11 29 327 3	KABINE KPL
SCHEIBE ISO 7093-1 10 A4	10540511	86	16	451	11 23 820 3	ANLENKSTUECK KPL
SCHEIBE ISO 7093-1 10 A4	10540511	16	2	479	99 29 588 14	AUFLAGE
SCHEIBE ISO 7093-1 10 A4	10540511	15	2	487	11 28 397 7	AUFFANGWANNE KPL
SCHEIBE ISO 7093-1 10 A4	10540511	15	2	488	11 28 397 8	AUFFANGWANNE KPL
SCHEIBE ISO 7093-1 10 A4	10540511	15	4	489	11 28 399 5	AUFFANGWANNE KPL
SCHEIBE ISO 7093-1 10 A4	10540511	15	4	490	11 28 399 7	AUFFANGWANNE KPL
SCHEIBE ISO 7093-1 10 A4	10540511	35	8	512	11 28 629 9	MONTAGETEILE
SCHEIBE ISO 7093-1 10 A4	10540511	16	8	554	11 28 979 0	GITTERROSTTRAEGER
SCHEIBE ISO 7093-1 10 A4	10540511	14	2	556	11 28 544 3	ABSTUETZUNG KPL
SCHEIBE ISO 7093-1 10 A4	10540511	46	2	577	99 48 521 14	SPITZEN AL KPL
SCHEIBE ISO 7093-1 10 A4	10540511	44	78	621	10 55 372 1	DACHGELAENDER NRS
SCHEIBE ISO 7093-1 10 A4	10540511	12	2	648	99 35 606 14	LASCHE KPL
SCHEIBE ISO 7093-1 10 A4	10540511	7	4	650	11 23 619 7	SELBSTVERLADESYSTEM NR
SCHEIBE ISO 7093-1 10 A4	10540511	15	4	705	11 26 771 6	MONTAGETEILE
SCHEIBE ISO 7093-1 12 A4	10540512	34	9	58	10 58 163 4	KABINENAUFHAENGUNG KPL
SCHEIBE ISO 7093-1 12 A4	10540512	71	11	304	11 24 483 7	BEF-TEILE OW
SCHEIBE ISO 7093-1 12 A4	10540512	14	2	388	99 18 041 14	VERZURRUNG OW

Bezeichnung	Artikel	Pos.	Menge	Blatt	Baugruppe	Bezeichnung
SCHEIBE ISO 7093-1 16	10544173	6	4	50	10 55 268 1	MITNEHMER EINBAU
SCHEIBE ISO 7093-1 16	10544173	74	8	451	11 23 820 3	ANLENKSTUECK KPL
SCHEIBE ISO 7093-1 16	10544173	27	4	485	11 28 390 8	AL BEGEHUNG
SCHEIBE ISO 7093-1 16	10544173	27	4	499	11 28 583 8	AL BEGEHUNG
SCHEIBE ISO 7093-1 16	10544173	27	4	505	11 28 626 1	AL BEGEHUNG
SCHEIBE ISO 7093-1 20	10544175	3	1	433	10 57 462 9	BOLZEN KPL
SCHEIBE ISO 7093-1 4 A4	10540497	44	2	715	10 52 155 9	MODUL BETANKUNGSANLAG
SCHEIBE ISO 7093-1 5 A4	485570714	23	4	60	10 56 067 3	BATTERIE EINBAU KPL
SCHEIBE ISO 7093-1 6 A4	10540500	73	6	268	11 24 114 3	ABGASANLAGE
SCHEIBE ISO 7093-1 6 A4	10540500	67	6	304	11 24 483 7	BEF-TEILE OW
SCHEIBE ISO 7093-1 6 A4	10540500	27	9	686	10 58 064 7	VIDEOUEBERWACHUNGSANL
SCHEIBE ISO 7093-1 8 A4	10540510	12	2	56	92 65 477 14	FEUERLOESCHER NRS
SCHEIBE ISO 7093-1 8 A4	10540510	16	4	58	10 58 163 4	KABINENAUFHAENGUNG KPL
SCHEIBE ISO 7093-1 8 A4	10540510	43	13	284	11 24 409 0	VERKLEIDUNG OW EINBAU KP
SCHEIBE ISO 7093-1 8 A4	10540510	86	34	304	11 24 483 7	BEF-TEILE OW
SCHEIBE ISO 7093-1 8 A4	10540510	27	4	320	10 51 968 6	EZW OW EINBAU KPL
SCHEIBE ISO 7093-1 8 A4	10540510	12	2	335	99 29 386 14	KONSOLE KPL
SCHEIBE ISO 7093-1 8 A4	10540510	12	2	336	99 29 434 14	KONSOLE KPL
SCHEIBE ISO 7093-1 8 A4	10540510	79	49	451	11 23 820 3	ANLENKSTUECK KPL
SCHEIBE ISO 7093-1 8 A4	10540510	28	5	485	11 28 390 8	AL BEGEHUNG
SCHEIBE ISO 7093-1 8 A4	10540510	28	5	499	11 28 583 8	AL BEGEHUNG
SCHEIBE ISO 7093-1 8 A4	10540510	28	5	505	11 28 626 1	AL BEGEHUNG
SCHEIBE ISO 7093-1 8 A4	10540510	34	4	512	11 28 629 9	MONTAGETEILE
SCHEIBE ISO 7093-1 8 A4	10540510	15	4	513	11 28 610 5	ARRETIERUNG KPL
SCHEIBE ISO 7093-1 8 A4	10540510	26	12	525	11 24 336 5	ANLENKSTUECK NADEL KPL
SCHEIBE ISO 7093-1 8 A4	10540510	14	6	526	10 53 140 9	ANLENKSTUECK EL
SCHEIBE ISO 7093-1 8 A4	10540510	17	4	554	11 28 979 0	GITTERROSTTRAEGER
SCHEIBE ISO 7093-1 8 A4	10540510	47	2	570	11 28 774 6	MONTAGETEILE
SCHEIBE ISO 7093-1 8 A4	10540510	26	8	650	11 23 619 7	SELBSTVERLADESYSTEM NR
SCHEIBE ISO 7093-1 8 A4	10540510	32	4	686	10 58 064 7	VIDEOUEBERWACHUNGSANL
SCHEIBE RD 34/20.4X5 30 CRM	422010414	38	20	75	11 24 773 5	AGGREGAT HYDR
SCHEIBENSATZ	9885924	39	1	105	98 89 984	RS TRIEBWERK
SCHEIBENSATZ	9885924	39	1	109	98 89 983	RS TRIEBWERK
SCHEIBENSATZ	9885937	29	1	123	10 13 802 6	RS ZYL.+STEUERPL.+WELLE
SCHELLE	10122693	10	1	182	10 14 861 5	OELWANNE VORM.
SCHELLE	10127614	4	1	221	10 14 736 9	ANSAUGSTUTZEN ANBAU
SCHELLE	10129179	5	1	210	10 13 508 0	DRUCKROHRSTUTZEN
SCHELLE	10336774	11	1	479	99 29 588 14	AUFLAGE
SCHELLE	10336774	11	2	480	10 35 063 3	HALTERUNG
SCHELLE	10513605	31	5	261	11 24 114 1	KUEHLER EINBAU LADELUFT
SCHELLE	11000593	13	2	238	10 14 622 4	TAKTVENTIL
SCHELLE	11215976	28	1	604	11 29 444 5	HEIZUNG NRS
SCHELLE	11229805	30	2	264	11 24 114 2	ANSAUGANLAGE LUFT
SCHELLE	7004780	27	1	604	11 29 444 5	HEIZUNG NRS
SCHELLE	7381292	21	1	217	10 14 588 5	LECKOELRUECKLAUF
SCHELLE	7381292	12	7	238	10 14 622 4	TAKTVENTIL
SCHELLE	7381629	5	3	186	10 14 671 6	OELLEITUNG VORM.
SCHELLE	7381631	14	1	221	10 14 736 9	ANSAUGSTUTZEN ANBAU
SCHELLE	7381631	16	1	221	10 14 736 9	ANSAUGSTUTZEN ANBAU
SCHELLE	7382088	15	1	217	10 14 588 5	LECKOELRUECKLAUF
SCHELLE	774212914	31	2	75	11 24 773 5	AGGREGAT HYDR
SCHELLE	774255714	54	4	254	11 24 114 0	KUEHLER EINBAU WASSER
SCHELLE	774259914	9	6	547	10 53 146 1	VERROHRUNG HYDR
SCHERENLAGERUNG	7025009	59	1	382	10 28 999 3	SCHWINGSYSTEM
SCHIEBEFENSTER	10224413	1	1	370	10 50 133 3	SCHIEBETUER
SCHIEBEFENSTER	11250970	3	1	372	11 27 901 2	TUERSCHEIBE
SCHIEBESITZFUEHRUNG	10289990	70	1	380	10 22 506 8	FAHRERSITZ
SCHIEBESITZFUEHRUNG	10289991	70	1	692	10 04 363 3	FAHRERSITZ LUFTGEFEDERT
SCHIEBESITZFUEHRUNG	7024987	71	1	380	10 22 506 8	FAHRERSITZ
SCHIEBETUER	10501333	3	1	366	10 35 250 8	KABINE

Bezeichnung	Artikel	Pos.	Menge	Blatt	Baugruppe	Bezeichnung
SCHILD	10099300	8	1	608	10 51 726 2	VERROHRUNG HYDR
SCHILD	10224930	11	1	582	99 38 329 14	SPITZEN AL KPL
SCHILD	10523125	38	2	450	11 23 820 3	ANLENKSTUECK KPL
SCHILD	10533589	12	1	340	11 22 703 7	BESEILUNG EZW HAUPT AL
SCHILD	10575705	38	1	714	10 52 155 9	MODUL BETANKUNGSANLAG
SCHILD	10584544	15	1	44	10 56 070 1	TANK HYDR KPL
SCHILD	11227046	11	1	340	11 22 703 7	BESEILUNG EZW HAUPT AL
SCHILD	11232788	22	1	699	11 23 189 1	KLIMAANLAGE NRS
SCHILD	11274707	17	1	275	11 24 114 5	ANLAGE HARNSTOFF EINBAU
SCHILD	11274708	18	1	275	11 24 114 5	ANLAGE HARNSTOFF EINBAU
SCHILD	606644414	27	1	566	10 57 624 5	KABELSATZ
SCHILD	773193414	39	1	450	11 23 820 3	ANLENKSTUECK KPL
SCHILD	773193414	23	1	459	10 58 193 7	GITTERROST KPL
SCHILD	773194314	40	2	450	11 23 820 3	ANLENKSTUECK KPL
SCHILD	773195214	317	1	311	10 51 969 7	NADELEINZIEHWINDE
SCHILD	773195214	317	1	606	10 51 743 9	SEILEINZIEHWINDE KPL NRS
SCHILD	790282814	2	1	580	91 89 071 14	SPITZEN AL UMBAU
SCHILD	790380214	22	1	544	10 53 145 5	RUECKFALLSTUETZE NADEL
SCHILD	790422414	50	1	577	99 48 521 14	SPITZEN AL KPL
SCHILD LIEBHERR	993419814	80	2	451	11 23 820 3	ANLENKSTUECK KPL
SCHILD NOT-AUS	606718408	35	1	362	11 26 095 7	STEUERSTAND RE
SCHILD STEUERPLATTE	10549547	51	1	350	11 29 327 3	KABINE KPL
SCHILD STEUERPLATTE	10549800	52	1	350	11 29 327 3	KABINE KPL
SCHILD STEUERPLATTE	10579680	12	1	601	11 29 551 4	KAELTEPAKET NRS
SCHILD UNFALLVERHUETUN	11461533	42	1	28	11 24 519 0	OW EL
SCHILD UVV	773195614	460	2	311	10 51 969 7	NADELEINZIEHWINDE
SCHILD UVV	773195614	460	2	606	10 51 743 9	SEILEINZIEHWINDE KPL NRS
SCHILDER ANORD	11218695	52	1	2	01 38 281 14	LR 1300 SX
SCHILDER ANORD	11266901	110	1	482	11 24 570 3	AL ZWISCHENSTUECK KPL
SCHILDER ANORD	11266901	110	1	498	11 24 570 9	AL ZWISCHENSTUECK KPL
SCHILDER ANORD	11266901	110	1	504	11 24 571 5	AL ZWISCHENSTUECK KPL
SCHILDER ANORD	11266901	110	1	552	11 24 084 8	AL ZWISCHENSTUECK KPL
SCHILDER ANORD	11266901	110	1	559	11 24 162 5	AL ZWISCHENSTUECK KPL
SCHILDER ANORD	11266901	110	1	562	11 24 163 0	AL ZWISCHENSTUECK KPL
SCHILDER ANORD	11266945	110	1	451	11 23 820 3	ANLENKSTUECK KPL
SCHILDER ANORD	11266945	110	1	523	11 24 618 2	NADELANBAUTEILE
SCHILDER ANORD	11269727	110	1	509	11 24 132 4	AL KOPF KPL
SCHILDER ANORD	11269727	110	1	564	11 24 263 6	NADELKOPF KPL
SCHILDER ANORD	11269906	110	1	633	10 51 176 9	ZWISCHENHUB NADEL AL KP
SCHLAPPSEILSICHERUNG	993584114	45	1	633	10 51 176 9	ZWISCHENHUB NADEL AL KP
SCHLAUCH	10352453	17	1	264	11 24 114 2	ANSAUGANLAGE LUFT
SCHLAUCH	11267556	11	1	257	10 57 423 7	KUEHLER MOTOR
SCHLAUCH	11267557	12	1	257	10 57 423 7	KUEHLER MOTOR
SCHLAUCH	11267558	13	1	257	10 57 423 7	KUEHLER MOTOR
SCHLAUCH	11271411	23	1	604	11 29 444 5	HEIZUNG NRS
SCHLAUCH	11621764	65	9	275	11 24 114 5	ANLAGE HARNSTOFF EINBAU
SCHLAUCH	510511814	37	2	408	10 55 876 0	RAUPENTRAEGER RE KPL
SCHLAUCH	510511814	37	2	417	10 55 876 1	RAUPENTRAEGER LI KPL
SCHLAUCH	510559314	43	2.5	254	11 24 114 0	KUEHLER EINBAU WASSER
SCHLAUCH	553084214	22	1	604	11 29 444 5	HEIZUNG NRS
SCHLAUCH	7362451	3	2.5	447	91 76 658 14	ABLASSSCHLAUCH KPL
SCHLAUCH	886002814	68	1.3	275	11 24 114 5	ANLAGE HARNSTOFF EINBAU
SCHLAUCH KPL	11222864	200	1	713	51 00 959 14	BETANKUNGSPUMPE
SCHLAUCH KPL	553079914	13	1	350	11 29 327 3	KABINE KPL
SCHLAUCH KPL	592007514	14	1	350	11 29 327 3	KABINE KPL
SCHLAUCH KPL	911108414	605	1	437	11 26 260 9	SCHLAUCHLISTE
SCHLAUCH KPL	911247914	112	1	405	11 23 548 0	SCHLAUCHLISTE
SCHLAUCH KPL	911247914	116	1	405	11 23 548 0	SCHLAUCHLISTE
SCHLAUCH KPL	911256414	596	1	38	11 26 995 4	SCHLAUCHLISTE
SCHLAUCH KPL	911292114	138	1	405	11 23 548 0	SCHLAUCHLISTE

Bezeichnung	Artikel	Pos.	Menge	Blatt	Baugruppe	Bezeichnung
SCHLAUCH KPL	914757914	404	1	161	11 24 113 7	SCHLAUCHLISTE
SCHLAUCH KPL	914762914	592	1	38	11 26 995 4	SCHLAUCHLISTE
SCHLAUCH KPL	914763014	655	1	323	10 55 208 5	SCHLAUCHLISTE
SCHLAUCH KPL	914792514	5022	1	38	11 26 995 4	SCHLAUCHLISTE
SCHLAUCH KPL	914794514	575	1	37	11 26 995 4	SCHLAUCHLISTE
SCHLAUCH KPL	914798914	551	1	37	11 26 995 4	SCHLAUCHLISTE
SCHLAUCH KPL	918245214	572	1	37	11 26 995 4	SCHLAUCHLISTE
SCHLAUCH KPL	918248414	280	1	647	11 22 970 9	SCHLAUCHLISTE
SCHLAUCH KPL	918269214	430	1	161	11 24 113 7	SCHLAUCHLISTE
SCHLAUCH KPL	918272514	127	1	405	11 23 548 0	SCHLAUCHLISTE
SCHLAUCH KPL	918285814	598	1	38	11 26 995 4	SCHLAUCHLISTE
SCHLAUCH KPL	918803414	130	1	405	11 23 548 0	SCHLAUCHLISTE
SCHLAUCH KPL	918803414	135	1	405	11 23 548 0	SCHLAUCHLISTE
SCHLAUCH KPL	918803414	142	1	405	11 23 548 0	SCHLAUCHLISTE
SCHLAUCH KPL	918803414	145	1	406	11 23 548 0	SCHLAUCHLISTE
SCHLAUCH KPL	918805114	707	1	69	10 54 545 1	SCHLAUCHLISTE
SCHLAUCH KPL	918810914	595	1	38	11 26 995 4	SCHLAUCHLISTE
SCHLAUCH KPL	918819414	380	1	348	10 56 178 0	SCHLAUCHLISTE
SCHLAUCH KPL	918820914	162	1	406	11 23 548 0	SCHLAUCHLISTE
SCHLAUCH KPL	918849914	827	1	610	10 52 439 2	SCHLAUCHLISTE
SCHLAUCH KPL	918870314	903	1	469	11 22 970 6	SCHLAUCHLISTE
SCHLAUCH KPL	918870914	826	1	314	99 33 241 14	SCHLAUCHLISTE
SCHLAUCH KPL	918873814	556	1	37	11 26 995 4	SCHLAUCHLISTE
SCHLAUCH KPL	918874514	432	1	161	11 24 113 7	SCHLAUCHLISTE
SCHLAUCH KPL	918882614	824	1	314	99 33 241 14	SCHLAUCHLISTE
SCHLAUCH KPL	919126414	364	1	658	99 27 747 14	SCHLAUCHLISTE
SCHLAUCH KPL	919126414	365	1	658	99 27 747 14	SCHLAUCHLISTE
SCHLAUCH KPL	919127514	708	1	69	10 54 545 1	SCHLAUCHLISTE
SCHLAUCH KPL	919140514	533	1	37	11 26 995 4	SCHLAUCHLISTE
SCHLAUCH KPL	919143414	421	1	161	11 24 113 7	SCHLAUCHLISTE
SCHLAUCH KPL	919144714	181	1	663	11 24 779 0	SCHLAUCHLISTE
SCHLAUCH KPL	919145114	805	1	716	11 28 825 7	SCHLAUCHLISTE
SCHLAUCH KPL	919158314	113	1	405	11 23 548 0	SCHLAUCHLISTE
SCHLAUCH KPL	919158314	117	1	405	11 23 548 0	SCHLAUCHLISTE
SCHLAUCH KPL	919167714	422	1	161	11 24 113 7	SCHLAUCHLISTE
SCHLAUCH KPL	919706714	527	1	36	11 26 995 4	SCHLAUCHLISTE
SCHLAUCH KPL	919714914	581	1	38	11 26 995 4	SCHLAUCHLISTE
SCHLAUCH KPL	919735014	524	1	36	11 26 995 4	SCHLAUCHLISTE
SCHLAUCH KPL	919736714	185	1	663	11 24 779 0	SCHLAUCHLISTE
SCHLAUCH KPL	919736714	186	1	663	11 24 779 0	SCHLAUCHLISTE
SCHLAUCH KPL	919757114	635	1	442	11 26 261 2	SCHLAUCHLISTE
SCHLAUCH KPL	919778814	902	1	469	11 22 970 6	SCHLAUCHLISTE
SCHLAUCH KPL	919791614	706	1	69	10 54 545 1	SCHLAUCHLISTE
SCHLAUCH KPL	928003714	163	1	406	11 23 548 0	SCHLAUCHLISTE
SCHLAUCH KPL	928009314	428	1	161	11 24 113 7	SCHLAUCHLISTE
SCHLAUCH KPL	928010214	511	1	36	11 26 995 4	SCHLAUCHLISTE
SCHLAUCH KPL	928010214	512	1	36	11 26 995 4	SCHLAUCHLISTE
SCHLAUCH KPL	928010214	513	1	36	11 26 995 4	SCHLAUCHLISTE
SCHLAUCH KPL	928010214	514	1	36	11 26 995 4	SCHLAUCHLISTE
SCHLAUCH KPL	928014714	904	1	469	11 22 970 6	SCHLAUCHLISTE
SCHLAUCH KPL	928020314	546	1	37	11 26 995 4	SCHLAUCHLISTE
SCHLAUCH KPL	928029714	906	1	469	11 22 970 6	SCHLAUCHLISTE
SCHLAUCH KPL	928029714	914	1	469	11 22 970 6	SCHLAUCHLISTE
SCHLAUCH KPL	928032214	547	1	37	11 26 995 4	SCHLAUCHLISTE
SCHLAUCH KPL	928044014	390	1	348	10 56 178 0	SCHLAUCHLISTE
SCHLAUCH KPL	928110014	584	1	38	11 26 995 4	SCHLAUCHLISTE
SCHLAUCH KPL	928113314	381	1	348	10 56 178 0	SCHLAUCHLISTE
SCHLAUCH KPL	928121514	917	1	469	11 22 970 6	SCHLAUCHLISTE
SCHLAUCH KPL	928123014	580	1	38	11 26 995 4	SCHLAUCHLISTE
SCHLAUCH KPL	928127314	131	1	405	11 23 548 0	SCHLAUCHLISTE

Bezeichnung	Artikel	Pos.	Menge	Blatt	Baugruppe	Bezeichnung
SCHLAUCH KPL	928127314	136	1	405	11 23 548 0	SCHLAUCHLISTE
SCHLAUCH KPL	928127314	143	1	406	11 23 548 0	SCHLAUCHLISTE
SCHLAUCH KPL	928127314	144	1	406	11 23 548 0	SCHLAUCHLISTE
SCHLAUCH KPL	928130914	800	1	271	11 24 972 9	SCHLAUCHLISTE
SCHLAUCH KPL	928130914	801	1	271	11 24 972 9	SCHLAUCHLISTE
SCHLAUCH KPL	928135714	822	1	40	11 23 110 9	SCHLAUCHLISTE
SCHLAUCH KPL	928137514	122	1	405	11 23 548 0	SCHLAUCHLISTE
SCHLAUCH KPL	928137714	702	1	69	10 54 545 1	SCHLAUCHLISTE
SCHLAUCH KPL	928152414	118	1	405	11 23 548 0	SCHLAUCHLISTE
SCHLAUCH KPL	928166714	909	1	469	11 22 970 6	SCHLAUCHLISTE
SCHLAUCH KPL	928166714	913	1	469	11 22 970 6	SCHLAUCHLISTE
SCHLAUCH KPL	928169614	151	1	406	11 23 548 0	SCHLAUCHLISTE
SCHLAUCH KPL	928169614	159	1	406	11 23 548 0	SCHLAUCHLISTE
SCHLAUCH KPL	928183014	506	1	36	11 26 995 4	SCHLAUCHLISTE
SCHLAUCH KPL	928204714	278	1	647	11 22 970 9	SCHLAUCHLISTE
SCHLAUCH KPL	928209814	102	1	405	11 23 548 0	SCHLAUCHLISTE
SCHLAUCH KPL	928209814	107	1	405	11 23 548 0	SCHLAUCHLISTE
SCHLAUCH KPL	928266514	403	1	161	11 24 113 7	SCHLAUCHLISTE
SCHLAUCH KPL	928272714	411	1	161	11 24 113 7	SCHLAUCHLISTE
SCHLAUCH KPL	928293114	133	1	405	11 23 548 0	SCHLAUCHLISTE
SCHLAUCH KPL	928293114	134	1	405	11 23 548 0	SCHLAUCHLISTE
SCHLAUCH KPL	928318214	802	1	458	11 23 239 9	SCHLAUCHLISTE
SCHLAUCH KPL	928318214	807	1	458	11 23 239 9	SCHLAUCHLISTE
SCHLAUCH KPL	928326514	825	1	314	99 33 241 14	SCHLAUCHLISTE
SCHLAUCH KPL	928348514	201	1	549	10 53 147 2	SCHLAUCHLISTE
SCHLAUCH KPL	928357214	585	1	38	11 26 995 4	SCHLAUCHLISTE
SCHLAUCH KPL	928443714	522	1	36	11 26 995 4	SCHLAUCHLISTE
SCHLAUCH KPL	928445414	536	1	37	11 26 995 4	SCHLAUCHLISTE
SCHLAUCH KPL	928456714	526	1	36	11 26 995 4	SCHLAUCHLISTE
SCHLAUCH KPL	928461114	525	1	36	11 26 995 4	SCHLAUCHLISTE
SCHLAUCH KPL	928536514	606	1	437	11 26 260 9	SCHLAUCHLISTE
SCHLAUCH KPL	928538414	704	1	69	10 54 545 1	SCHLAUCHLISTE
SCHLAUCH KPL	928538414	139	1	405	11 23 548 0	SCHLAUCHLISTE
SCHLAUCH KPL	928589814	431	1	161	11 24 113 7	SCHLAUCHLISTE
SCHLAUCH KPL	928591114	703	1	69	10 54 545 1	SCHLAUCHLISTE
SCHLAUCH KPL	928611014	435	1	162	11 24 113 7	SCHLAUCHLISTE
SCHLAUCH KPL	928619114	360	1	658	99 27 747 14	SCHLAUCHLISTE
SCHLAUCH KPL	928712614	597	1	38	11 26 995 4	SCHLAUCHLISTE
SCHLAUCH KPL	928763814	908	1	469	11 22 970 6	SCHLAUCHLISTE
SCHLAUCH KPL	928763814	912	1	469	11 22 970 6	SCHLAUCHLISTE
SCHLAUCH KPL	928764814	548	1	37	11 26 995 4	SCHLAUCHLISTE
SCHLAUCH KPL	928765014	508	1	36	11 26 995 4	SCHLAUCHLISTE
SCHLAUCH KPL	928815314	295	1	445	91 90 239 14	LEITUNG HYDR
SCHLAUCH KPL	928857314	407	1	161	11 24 113 7	SCHLAUCHLISTE
SCHLAUCH KPL	928861314	823	1	314	99 33 241 14	SCHLAUCHLISTE
SCHLAUCH KPL	928861414	824	1	40	11 23 110 9	SCHLAUCHLISTE
SCHLAUCH KPL	928865914	154	1	406	11 23 548 0	SCHLAUCHLISTE
SCHLAUCH KPL	928865914	158	1	406	11 23 548 0	SCHLAUCHLISTE
SCHLAUCH KPL	928868414	418	1	161	11 24 113 7	SCHLAUCHLISTE
SCHLAUCH KPL	928872514	103	1	405	11 23 548 0	SCHLAUCHLISTE
SCHLAUCH KPL	928872814	108	1	405	11 23 548 0	SCHLAUCHLISTE
SCHLAUCH KPL	928880614	427	1	161	11 24 113 7	SCHLAUCHLISTE
SCHLAUCH KPL	928885614	559	1	37	11 26 995 4	SCHLAUCHLISTE
SCHLAUCH KPL	928950414	656	1	323	10 55 208 5	SCHLAUCHLISTE
SCHLAUCH KPL	928952714	420	1	161	11 24 113 7	SCHLAUCHLISTE
SCHLAUCH KPL	928973314	150	1	406	11 23 548 0	SCHLAUCHLISTE
SCHLAUCH KPL	928973314	156	1	406	11 23 548 0	SCHLAUCHLISTE
SCHLAUCH KPL	929376814	705	1	69	10 54 545 1	SCHLAUCHLISTE
SCHLAUCH KPL	929381114	415	1	161	11 24 113 7	SCHLAUCHLISTE
SCHLAUCH KPL	929390914	132	1	405	11 23 548 0	SCHLAUCHLISTE

Bezeichnung	Artikel	Pos.	Menge	Blatt	Baugruppe	Bezeichnung
SCHLAUCH KPL	929390914	137	1	405	11 23 548 0	SCHLAUCHLISTE
SCHLAUCH KPL	929399714	166	1	406	11 23 548 0	SCHLAUCHLISTE
SCHLAUCH KPL	929414814	555	1	37	11 26 995 4	SCHLAUCHLISTE
SCHLAUCH KPL	929443814	828	1	610	10 52 439 2	SCHLAUCHLISTE
SCHLAUCH KPL	929459114	823	1	40	11 23 110 9	SCHLAUCHLISTE
SCHLAUCH KPL	929467714	153	1	406	11 23 548 0	SCHLAUCHLISTE
SCHLAUCH KPL	929467714	157	1	406	11 23 548 0	SCHLAUCHLISTE
SCHLAUCH KPL	929473314	582	1	38	11 26 995 4	SCHLAUCHLISTE
SCHLAUCH KPL	929491914	825	1	40	11 23 110 9	SCHLAUCHLISTE
SCHLAUCH KPL	990038114	583	1	38	11 26 995 4	SCHLAUCHLISTE
SCHLAUCH KPL	990053014	408	1	161	11 24 113 7	SCHLAUCHLISTE
SCHLAUCH KPL	990055814	361	1	658	99 27 747 14	SCHLAUCHLISTE
SCHLAUCH KPL	990055914	362	1	658	99 27 747 14	SCHLAUCHLISTE
SCHLAUCH KPL	991109014	282	1	647	11 22 970 9	SCHLAUCHLISTE
SCHLAUCH KPL	991109014	283	1	647	11 22 970 9	SCHLAUCHLISTE
SCHLAUCH KPL	991139814	401	1	161	11 24 113 7	SCHLAUCHLISTE
SCHLAUCH KPL	991168714	509	1	36	11 26 995 4	SCHLAUCHLISTE
SCHLAUCH KPL	991170814	652	1	323	10 55 208 5	SCHLAUCHLISTE
SCHLAUCH KPL	991195514	367	1	610	10 52 439 2	SCHLAUCHLISTE
SCHLAUCH KPL	991198814	810	1	458	11 23 239 9	SCHLAUCHLISTE
SCHLAUCH KPL	991198814	811	1	458	11 23 239 9	SCHLAUCHLISTE
SCHLAUCH KPL	991205314	364	1	610	10 52 439 2	SCHLAUCHLISTE
SCHLAUCH KPL	991209514	5020	1	38	11 26 995 4	SCHLAUCHLISTE
SCHLAUCH KPL	991242714	915	1	469	11 22 970 6	SCHLAUCHLISTE
SCHLAUCH KPL	991253814	579	1	38	11 26 995 4	SCHLAUCHLISTE
SCHLAUCH KPL	991285814	918	1	469	11 22 970 6	SCHLAUCHLISTE
SCHLAUCH KPL	991312114	152	1	406	11 23 548 0	SCHLAUCHLISTE
SCHLAUCH KPL	991312114	155	1	406	11 23 548 0	SCHLAUCHLISTE
SCHLAUCH KPL	991362714	826	1	40	11 23 110 9	SCHLAUCHLISTE
SCHLAUCH KPL	991375814	587	1	38	11 26 995 4	SCHLAUCHLISTE
SCHLAUCH KPL	991384314	388	1	348	10 56 178 0	SCHLAUCHLISTE
SCHLAUCH KPL	991390514	570	1	37	11 26 995 4	SCHLAUCHLISTE
SCHLAUCH KPL	991391814	602	1	437	11 26 260 9	SCHLAUCHLISTE
SCHLAUCH KPL	991528514	586	1	38	11 26 995 4	SCHLAUCHLISTE
SCHLAUCH KPL	991547014	419	1	161	11 24 113 7	SCHLAUCHLISTE
SCHLAUCH KPL	991563114	812	1	458	11 23 239 9	SCHLAUCHLISTE
SCHLAUCH KPL	991563114	817	1	458	11 23 239 9	SCHLAUCHLISTE
SCHLAUCH KPL	991587514	552	1	37	11 26 995 4	SCHLAUCHLISTE
SCHLAUCH KPL	991964414	406	1	161	11 24 113 7	SCHLAUCHLISTE
SCHLAUCH KPL	992258514	569	1	37	11 26 995 4	SCHLAUCHLISTE
SCHLAUCH KPL	992261314	577	1	37	11 26 995 4	SCHLAUCHLISTE
SCHLAUCH KPL	992261414	520	1	36	11 26 995 4	SCHLAUCHLISTE
SCHLAUCH KPL	992273614	180	1	663	11 24 779 0	SCHLAUCHLISTE
SCHLAUCH KPL	992296514	279	1	647	11 22 970 9	SCHLAUCHLISTE
SCHLAUCH KPL	992298714	591	1	38	11 26 995 4	SCHLAUCHLISTE
SCHLAUCH KPL	992504214	813	1	458	11 23 239 9	SCHLAUCHLISTE
SCHLAUCH KPL	992511514	604	1	437	11 26 260 9	SCHLAUCHLISTE
SCHLAUCH KPL	992519014	594	1	38	11 26 995 4	SCHLAUCHLISTE
SCHLAUCH KPL	992552014	389	1	348	10 56 178 0	SCHLAUCHLISTE
SCHLAUCH KPL	992561114	203	1	549	10 53 147 2	SCHLAUCHLISTE
SCHLAUCH KPL	992569114	557	1	37	11 26 995 4	SCHLAUCHLISTE
SCHLAUCH KPL	992835314	400	1	161	11 24 113 7	SCHLAUCHLISTE
SCHLAUCH KPL	992837314	367	1	658	99 27 747 14	SCHLAUCHLISTE
SCHLAUCH KPL	992857714	366	1	658	99 27 747 14	SCHLAUCHLISTE
SCHLAUCH KPL	992879314	634	1	442	11 26 261 2	SCHLAUCHLISTE
SCHLAUCH KPL	992893114	803	1	458	11 23 239 9	SCHLAUCHLISTE
SCHLAUCH KPL	993204614	104	1	405	11 23 548 0	SCHLAUCHLISTE
SCHLAUCH KPL	993204614	109	1	405	11 23 548 0	SCHLAUCHLISTE
SCHLAUCH KPL	993213714	653	1	323	10 55 208 5	SCHLAUCHLISTE
SCHLAUCH KPL	993226114	800	1	458	11 23 239 9	SCHLAUCHLISTE

Bezeichnung	Artikel	Pos.	Menge	Blatt	Baugruppe	Bezeichnung
SCHLAUCH KPL	993226114	801	1	458	11 23 239 9	SCHLAUCHLISTE
SCHLAUCH KPL	993227714	650	1	675	10 53 635 2	SCHLAUCHLISTE
SCHLAUCH KPL	993249414	200	1	549	10 53 147 2	SCHLAUCHLISTE
SCHLAUCH KPL	993249514	202	1	549	10 53 147 2	SCHLAUCHLISTE
SCHLAUCH KPL	993623814	822	1	314	99 33 241 14	SCHLAUCHLISTE
SCHLAUCH KPL	993643514	409	1	161	11 24 113 7	SCHLAUCHLISTE
SCHLAUCH KPL	993657714	516	1	36	11 26 995 4	SCHLAUCHLISTE
SCHLAUCH KPL	993685614	633	1	442	11 26 261 2	SCHLAUCHLISTE
SCHLAUCH KPL	993734014	535	1	37	11 26 995 4	SCHLAUCHLISTE
SCHLAUCH KPL	993751514	654	1	323	10 55 208 5	SCHLAUCHLISTE
SCHLAUCH KPL	993758914	182	1	663	11 24 779 0	SCHLAUCHLISTE
SCHLAUCH KPL	993758914	183	1	663	11 24 779 0	SCHLAUCHLISTE
SCHLAUCH KPL	993758914	188	1	663	11 24 779 0	SCHLAUCHLISTE
SCHLAUCH KPL	993758914	189	1	663	11 24 779 0	SCHLAUCHLISTE
SCHLAUCH KPL	993759614	651	1	675	10 53 635 2	SCHLAUCHLISTE
SCHLAUCH KPL	993774614	537	1	37	11 26 995 4	SCHLAUCHLISTE
SCHLAUCH KPL	993775014	5021	1	38	11 26 995 4	SCHLAUCHLISTE
SCHLAUCH KPL	994460114	545	1	37	11 26 995 4	SCHLAUCHLISTE
SCHLAUCH KPL	994465914	519	1	36	11 26 995 4	SCHLAUCHLISTE
SCHLAUCH KPL	994486214	900	1	469	11 22 970 6	SCHLAUCHLISTE
SCHLAUCH KPL	994486214	901	1	469	11 22 970 6	SCHLAUCHLISTE
SCHLAUCH KPL	994486214	910	1	469	11 22 970 6	SCHLAUCHLISTE
SCHLAUCH KPL	994905314	636	1	442	11 26 261 2	SCHLAUCHLISTE
SCHLAUCH KPL	995006114	578	1	38	11 26 995 4	SCHLAUCHLISTE
SCHLAUCH KPL	995027514	532	1	37	11 26 995 4	SCHLAUCHLISTE
SCHLAUCH KPL	995060114	521	1	36	11 26 995 4	SCHLAUCHLISTE
SCHLAUCH KPL	995082614	382	1	348	10 56 178 0	SCHLAUCHLISTE
SCHLAUCH KPL	995174014	905	1	469	11 22 970 6	SCHLAUCHLISTE
SCHLAUCH KPL	995175314	281	1	647	11 22 970 9	SCHLAUCHLISTE
SCHLAUCH KPL	995176314	538	1	37	11 26 995 4	SCHLAUCHLISTE
SCHLAUCH KPL	995180714	416	1	161	11 24 113 7	SCHLAUCHLISTE
SCHLAUCH KPL	995207914	540	1	37	11 26 995 4	SCHLAUCHLISTE
SCHLAUCH KPL	995219914	140	1	405	11 23 548 0	SCHLAUCHLISTE
SCHLAUCH KPL	995226814	184	1	663	11 24 779 0	SCHLAUCHLISTE
SCHLAUCH KPL	995226814	187	1	663	11 24 779 0	SCHLAUCHLISTE
SCHLAUCH KPL	995240114	167	1	406	11 23 548 0	SCHLAUCHLISTE
SCHLAUCH KPL	995263914	425	1	161	11 24 113 7	SCHLAUCHLISTE
SCHLAUCH KPL	995264214	566	1	37	11 26 995 4	SCHLAUCHLISTE
SCHLAUCH KPL	995285414	361	1	610	10 52 439 2	SCHLAUCHLISTE
SCHLAUCH KPL	995421014	402	1	161	11 24 113 7	SCHLAUCHLISTE
SCHLAUCH KPL	995437214	119	1	405	11 23 548 0	SCHLAUCHLISTE
SCHLAUCH KPL	995440614	576	1	37	11 26 995 4	SCHLAUCHLISTE
SCHLAUCH KPL	995550714	429	1	161	11 24 113 7	SCHLAUCHLISTE
SCHLAUCH KPL	995830614	804	1	711	10 57 089 4	SCHLAUCHLISTE
SCHLAUCH KPL	995865114	907	1	469	11 22 970 6	SCHLAUCHLISTE
SCHLAUCH KPL	995865114	911	1	469	11 22 970 6	SCHLAUCHLISTE
SCHLAUCH KPL	995943114	600	1	437	11 26 260 9	SCHLAUCHLISTE
SCHLAUCH KPL	995943514	619	1	437	11 26 260 9	SCHLAUCHLISTE
SCHLAUCH KPL	995943614	620	1	437	11 26 260 9	SCHLAUCHLISTE
SCHLAUCH KPL	995943714	628	1	442	11 26 261 2	SCHLAUCHLISTE
SCHLAUCH KPL	995943814	629	1	442	11 26 261 2	SCHLAUCHLISTE
SCHLAUCH KPL	995944014	631	1	442	11 26 261 2	SCHLAUCHLISTE
SCHLAUCH KPL	995944114	632	1	442	11 26 261 2	SCHLAUCHLISTE
SCHLAUCH KPL	995944214	384	1	348	10 56 178 0	SCHLAUCHLISTE
SCHLAUCH KPL	995944314	387	1	348	10 56 178 0	SCHLAUCHLISTE
SCHLAUCH KPL	995944414	391	1	348	10 56 178 0	SCHLAUCHLISTE
SCHLAUCH KPL	995951214	392	1	348	10 56 178 0	SCHLAUCHLISTE
SCHLAUCH KPL	995951314	650	1	323	10 55 208 5	SCHLAUCHLISTE
SCHLAUCH KPL	995951414	651	1	323	10 55 208 5	SCHLAUCHLISTE
SCHLAUCH KPL	995959114	916	1	469	11 22 970 6	SCHLAUCHLISTE

Bezeichnung	Artikel	Pos.	Menge	Blatt	Baugruppe	Bezeichnung
SCHLAUCH KPL	995961914	424	1	161	11 24 113 7	SCHLAUCHLISTE
SCHLAUCH KPL	995962014	426	1	161	11 24 113 7	SCHLAUCHLISTE
SCHLAUCH KPL	995972114	500	1	36	11 26 995 4	SCHLAUCHLISTE
SCHLAUCH KPL	995972214	501	1	36	11 26 995 4	SCHLAUCHLISTE
SCHLAUCH KPL	995972314	502	1	36	11 26 995 4	SCHLAUCHLISTE
SCHLAUCH KPL	995972414	503	1	36	11 26 995 4	SCHLAUCHLISTE
SCHLAUCH KPL	995972514	504	1	36	11 26 995 4	SCHLAUCHLISTE
SCHLAUCH KPL	995972614	505	1	36	11 26 995 4	SCHLAUCHLISTE
SCHLAUCH KPL	995972814	510	1	36	11 26 995 4	SCHLAUCHLISTE
SCHLAUCH KPL	995972914	515	1	36	11 26 995 4	SCHLAUCHLISTE
SCHLAUCH KPL	995973014	518	1	36	11 26 995 4	SCHLAUCHLISTE
SCHLAUCH KPL	995973214	523	1	36	11 26 995 4	SCHLAUCHLISTE
SCHLAUCH KPL	995991314	630	1	442	11 26 261 2	SCHLAUCHLISTE
SCHLAUCH KPL	996467014	567	1	37	11 26 995 4	SCHLAUCHLISTE
SCHLAUCH KPL	996467114	590	1	38	11 26 995 4	SCHLAUCHLISTE
SCHLAUCH KPL	996625314	820	1	314	99 33 241 14	SCHLAUCHLISTE
SCHLAUCH KPL	996625414	821	1	314	99 33 241 14	SCHLAUCHLISTE
SCHLAUCH KPL	996770614	822	1	278	11 26 949 8	SCHLAUCHLISTE
SCHLAUCH KPL	996770614	825	1	278	11 26 949 8	SCHLAUCHLISTE
SCHLAUCH KPL	996770714	823	1	278	11 26 949 8	SCHLAUCHLISTE
SCHLAUCH KPL	996770814	824	1	278	11 26 949 8	SCHLAUCHLISTE
SCHLAUCH KPL	996771014	826	1	278	11 26 949 8	SCHLAUCHLISTE
SCHLAUCH KPL	996771114	827	1	278	11 26 949 8	SCHLAUCHLISTE
SCHLAUCH KPL	996778614	541	1	37	11 26 995 4	SCHLAUCHLISTE
SCHLAUCH KPL	996779714	803	1	271	11 24 972 9	SCHLAUCHLISTE
SCHLAUCHARMATUR	7402657	1	1	447	91 76 658 14	ABLASSSCHLAUCH KPL
SCHLAUCHHALTER SCHWK H	916183314	78	1	451	11 23 820 3	ANLENKSTUECK KPL
SCHLAUCHHALTER SCHWK	949401114	16	1	302	11 24 483 7	BEF-TEILE OW
SCHLAUCHLEITUNG	10144282	66	1	275	11 24 114 5	ANLAGE HARNSTOFF EINBAU
SCHLAUCHLEITUNG	10144297	67	1	275	11 24 114 5	ANLAGE HARNSTOFF EINBAU
SCHLAUCHLEITUNG	790042214	5	1	444	10 56 183 8	WERKZEUG
SCHLAUCHLEITUNG	790042914	6	1	444	10 56 183 8	WERKZEUG
SCHLAUCHLISTE	10524392	4	1	606	10 51 743 9	SEILEINZIEHWINDE KPL NRS
SCHLAUCHLISTE	10527642	20	1	699	11 23 189 1	KLIMAANLAGE NRS
SCHLAUCHLISTE	10531472	4	1	544	10 53 145 5	RUECKFALLSTUETZE NADEL
SCHLAUCHLISTE	10536352	4	1	672	10 53 635 0	GLEICHLAUF HYDR NRS
SCHLAUCHLISTE	10545451	4	1	64	10 51 969 4	A-BOCK AUFRICHTZYL EINBA
SCHLAUCHLISTE	10552085	4	1	320	10 51 968 6	EZW OW EINBAU KPL
SCHLAUCHLISTE	10561780	4	1	341	10 51 968 2	DW OW
SCHLAUCHLISTE	10570894	4	1	710	10 52 155 4	BETANKUNGSANLAGE NRS
SCHLAUCHLISTE	11229706	4	1	462	11 29 259 8	RUECKFALLSTUETZE
SCHLAUCHLISTE	11229709	4	1	644	10 51 971 3	SELBSTVERLADESYSTEM NR
SCHLAUCHLISTE	11231109	4	1	39	99 14 627 14	WARMWASSERHEIZUNG OW
SCHLAUCHLISTE	11232399	4	1	448	11 23 820 3	ANLENKSTUECK KPL
SCHLAUCHLISTE	11235480	4	1	389	11 23 547 8	UW KPL
SCHLAUCHLISTE	11241137	4	1	73	11 24 048 0	ZENTRALAGGREGAT
SCHLAUCHLISTE	11247790	4	1	660	11 89 568 5	SELBSTVERLADESYSTEM NR
SCHLAUCHLISTE	11249729	4	1	270	11 24 114 4	KRAFTSTOFFANLAGE
SCHLAUCHLISTE	11262609	4	1	423	11 26 260 5	WINDE 1 KRAN
SCHLAUCHLISTE	11262612	4	1	438	11 26 261 0	WINDE 2 KRAN
SCHLAUCHLISTE	11269498	126	1	276	11 24 114 5	ANLAGE HARNSTOFF EINBAU
SCHLAUCHLISTE	11269954	4	1	6	11 24 047 9	OW KPL
SCHLAUCHLISTE	11288257	103	1	710	10 52 155 4	BETANKUNGSANLAGE NRS
SCHLAUCHLISTE	11310079	108	1	710	10 52 155 4	BETANKUNGSANLAGE NRS
SCHLAUCHLISTE	992774714	4	1	650	11 23 619 7	SELBSTVERLADESYSTEM NR
SCHLAUCHLISTE	993324114	4	1	311	10 51 969 7	NADELEINZIEHWINDE
SCHLAUCHNIPPEL	10121893	10	1	221	10 14 736 9	ANSAUGSTUTZEN ANBAU
SCHLAUCHNIPPEL	10140969	5	1	233	10 14 274 4	KUEHLWASSERENTLUEFTUN
SCHLAUCHNIPPEL	10142668	1	1	233	10 14 274 4	KUEHLWASSERENTLUEFTUN
SCHLAUCHNIPPEL	9140351	26	1	236	10 14 013 6	ATL-ANBAU

Bezeichnung	Artikel	Pos.	Menge	Blatt	Baugruppe	Bezeichnung
SCHLAUCHSATZ KPL	10527912	1	1	703	10 52 764 2	SCHLAUCHLISTE
SCHLAUCHSATZ KPL	10527916	2	1	703	10 52 764 2	SCHLAUCHLISTE
SCHLAUCHSATZ KPL	10527918	3	1	703	10 52 764 2	SCHLAUCHLISTE
SCHLAUCHSCHELLE	10579070	50	6	167	10 57 532 2	ANSAUGROHR OEL KPL
SCHLAUCHSCHELLE	10581765	58	1	254	11 24 114 0	KUEHLER EINBAU WASSER
SCHLAUCHSCHELLE	10581765	50	1	275	11 24 114 5	ANLAGE HARNSTOFF EINBAU
SCHLAUCHSCHELLE	11005281	10	7	238	10 14 622 4	TAKTVENTIL
SCHLAUCHSCHELLE	11067863	54	4	275	11 24 114 5	ANLAGE HARNSTOFF EINBAU
SCHLAUCHSCHELLE	482000814	25	8	604	11 29 444 5	HEIZUNG NRS
SCHLAUCHSCHELLE	4900778	3	4	39	99 14 627 14	WARMWASSERHEIZUNG OW
SCHLAUCHSCHELLE	4900778	11	2	221	10 14 736 9	ANSAUGSTUTZEN ANBAU
SCHLAUCHSCHELLE	4900778	25	2	236	10 14 013 6	ATL-ANBAU
SCHLAUCHSCHELLE	4900778	91	4	255	11 24 114 0	KUEHLER EINBAU WASSER
SCHLAUCHSCHELLE	4900778	2	1	447	91 76 658 14	ABLASSSCHLAUCH KPL
SCHLAUCHSCHELLE	4901138	2	1	186	10 14 671 6	OELLEITUNG VORM.
SCHLAUCHSCHELLE	4981029	8	3	186	10 14 671 6	OELLEITUNG VORM.
SCHLAUCHSCHELLE	5004927	9	1	179	10 14 201 8	KURBELGEHAEUSEENTLUEF
SCHLAUCHSCHELLE	550838008	31	2	604	11 29 444 5	HEIZUNG NRS
SCHLAUCHSCHELLE	550849508	26	5	604	11 29 444 5	HEIZUNG NRS
SCHLAUCHSCHELLE	553102308	29	6	604	11 29 444 5	HEIZUNG NRS
SCHLAUCHSCHELLE	5700024	8	5	179	10 14 201 8	KURBELGEHAEUSEENTLUEF
SCHLAUCHSCHELLE	774204914	55	6	254	11 24 114 0	KUEHLER EINBAU WASSER
SCHLAUCHSCHELLE	774204914	15	1	270	11 24 114 4	KRAFTSTOFFANLAGE
SCHLAUCHSCHELLE	774204914	51	14	275	11 24 114 5	ANLAGE HARNSTOFF EINBAU
SCHLAUCHSCHELLE	774206408	52	4	254	11 24 114 0	KUEHLER EINBAU WASSER
SCHLAUCHSCHELLE	774209908	31	2	264	11 24 114 2	ANSAUGANLAGE LUFT
SCHLAUCHSCHELLE	774214308	8	1	689	10 51 728 1	VERROHRUNG HYDR
SCHLAUCHSCHELLE	774217108	34	1	264	11 24 114 2	ANSAUGANLAGE LUFT
SCHLAUCHSCHELLE	774218808	53	9	254	11 24 114 0	KUEHLER EINBAU WASSER
SCHLAUCHSCHELLE	774241914	32	1	264	11 24 114 2	ANSAUGANLAGE LUFT
SCHLAUCHSCHELLE	774247214	33	2	264	11 24 114 2	ANSAUGANLAGE LUFT
SCHLAUCHSCHELLE	774256114	52	2	167	10 57 532 2	ANSAUGROHR OEL KPL
SCHLAUCHSCHELLE	790208814	51	6	167	10 57 532 2	ANSAUGROHR OEL KPL
SCHLAUCHSCHELLE	790244814	53	1	275	11 24 114 5	ANLAGE HARNSTOFF EINBAU
SCHLAUCHSCHELLENVERSCH	693152314	83	2	566	10 57 624 5	KABELSATZ
SCHLAUCHSTUTZEN	11271905	46	1	604	11 29 444 5	HEIZUNG NRS
SCHLAUCHSTUTZEN	511713914	40	1	254	11 24 114 0	KUEHLER EINBAU WASSER
SCHLAUCHSTUTZEN	511713914	36	4	275	11 24 114 5	ANLAGE HARNSTOFF EINBAU
SCHLIESSBOLZEN	592333714	6	1	373	59 22 871 14	FRONTSCHEIBE KPL
SCHLIESSBOLZEN	7615720	2	1	368	10 22 645 4	TUERE ZUBEHOEHR
SCHLIESSKEIL	10447258	47	1	370	10 50 133 3	SCHIEBETUER
SCHLINGE	805090714	18	1	531	11 24 475 9	A-BOCK 2 KPL
SCHLINGE	805091714	19	1	531	11 24 475 9	A-BOCK 2 KPL
SCHLITZBAND	11234375	57	2	302	11 24 483 7	BEF-TEILE OW
SCHLITZBAND	11244040	52	2	302	11 24 483 7	BEF-TEILE OW
SCHLITZBAND	11247029	28	1	302	11 24 483 7	BEF-TEILE OW
SCHLITZBAND	11247792	31	9	302	11 24 483 7	BEF-TEILE OW
SCHLITZBAND	11247799	32	2	302	11 24 483 7	BEF-TEILE OW
SCHLITZBANDSTAHL	11234799	15	2	164	11 24 113 8	MOTORLAGER KPL
SCHLUESSEL	10663954	50	2	362	11 26 095 7	STEUERSTAND RE
SCHLUESSEL	981809914	999	1	4	01 38 281 14	LR 1300 SX
SCHLUESSELANHAENGER	10595399	72	1	29	11 24 519 0	OW EL
SCHLUESSELRING RD 25	704214114	20	2	288	11 24 409 1	VERKLEIDUNG
SCHLUESSELSCHALTER	10539250	71	1	29	11 24 519 0	OW EL
SCHMIERNIPPEL	10571619	7	1	595	11 27 148 8	AUFHAENGUNG
SCHMIERNIPPEL	11312502	4	1	587	10 50 435 2	SEILROLLE
SCHMIEROELFILTER ANBAU	10142942	150	1	171	10 14 032 7	DIESELMOTOR
SCHMIEROELLEITUNG	10140137	7	1	236	10 14 013 6	ATL-ANBAU
SCHMIEROELPUMPE	10133945	140	1	171	10 14 032 7	DIESELMOTOR
SCHMIEROELPUMPE	10138565	1	1	202	10 13 394 5	SCHMIEROELPUMPE

Bezeichnung	Artikel	Pos.	Menge	Blatt	Baugruppe	Bezeichnung
SCHMIEROELPUMPE	592178914	580	1	78	11 24 682 0	VERTEILERGETRIEBE
SCHNELLVERSCHLUSSKUPPL	10445101	8	1	392	11 25 903 1	VERROHRUNG HYDR
SCHNELLVERSCHLUSSKUPPL	10445102	7	1	392	11 25 903 1	VERROHRUNG HYDR
SCHNELLVERSCHLUSSKUPPL	10445105	19	1	8	11 29 618 6	OW HYDR
SCHNELLVERSCHLUSSKUPPL	10551548	9	2	392	11 25 903 1	VERROHRUNG HYDR
SCHNELLVERSCHLUSSKUPPL	10551576	2	1	453	10 51 826 1	ANLENKSTUECK HYDR
SCHNELLVERSCHRAUBUNG	510571914	15	1	8	11 29 618 6	OW HYDR
SCHNELLVERSCHRAUBUNG	510571914	9	1	465	10 51 959 1	VERROHRUNG HYDR
SCHNELLVERSCHRAUBUNG	510572214	14	2	8	11 29 618 6	OW HYDR
SCHNELLVERSCHRAUBUNG	510572214	8	1	465	10 51 959 1	VERROHRUNG HYDR
SCHNELLVERSCHRAUBUNG	511511214	18	1	8	11 29 618 6	OW HYDR
SCHNELLVERSCHRAUBUNG	511511314	17	1	8	11 29 618 6	OW HYDR
SCHNELLVERSCHRAUBUNG	511704214	8	1	8	11 29 618 6	OW HYDR
SCHNELLVERSCHRAUBUNG	511704314	2	1	445	91 90 239 14	LEITUNG HYDR
SCHNELLVERSCHRAUBUNG	511708414	16	1	8	11 29 618 6	OW HYDR
SCHONHAMMER 60G	885045214	18	1	444	10 56 183 8	WERKZEUG
SCHOTTBLECH	10558762	34	1	408	10 55 876 0	RAUPENTRAEGER RE KPL
SCHOTTBLECH	10558762	34	1	417	10 55 876 1	RAUPENTRAEGER LI KPL
SCHOTTBLECH	11235482	35	2	419	11 23 548 1	MITTELTEIL KPL
SCHOTTPLATTE	10020512	9	1	286	11 24 409 1	VERKLEIDUNG
SCHOTTPLATTE	10226510	15	1	350	11 29 327 3	KABINE KPL
SCHOTTPLATTE	10445043	47	1	450	11 23 820 3	ANLENKSTUECK KPL
SCHRAUBE	592287514	15	1	373	59 22 871 14	FRONTSCHEIBE KPL
SCHRAUBE DIN 931 M8X050	11236106	19	12	586	79 04 112 14	UNTERFLASCHE
SCHRAUBE DIN 931 M8X050	11236106	19	12	593	79 04 871 14	UNTERFLASCHE
SCHRAUBE M12X30	11249772	10	3	395	10 55 097 0	DREHDURCHFUEHRUNG HYD
SCHRAUBE M30X1.5X150	10590183	12	4	410	10 55 716 2	LEITRAD KPL
SCHRAUBE UN 1206 M10X30	10502692	5	1	31	10 53 048 9	SICHERUNGSHALTER
SCHRAUBE UN 1206 M10X30	10502692	55	1	708	10 56 013 7	FREMDEINSPEISUNG BATTERI
SCHRAUBENSICHERUNG	10547904	10	1	324	10 55 156 3	WINDE
SCHRAUBENSICHERUNG	811205708	104	1	97	10 11 835 0	ANSCHLUSSGEHAEUSE
SCHRAUBENSICHERUNG	811205708	104	1	104	10 13 975 2	RS SCHWENKJOCH
SCHRAUBENSICHERUNG	811205708	105	1	226	10 14 286 0	KLIMAKOMPRESSOR ANBAU
SCHRAUBENSICHERUNG	8655016	105	1	99	10 11 835 7	RS ANSCHLUSSGEHAEUSE
SCHRAUBENSICHERUNG	8655016	105	1	100	92 74 731	DS ANSCHLUSSGEHAEUSE
SCHRAUBENSICHERUNG	8655016	105	1	129	10 14 131 6	ANSCHLUSSPLATTE VORM.
SCHRAUBENSICHERUNG	8655016	109	1	240	10 12 037 2	STARTER ANBAU
SCHRAUBENSICHERUNG	870000814	200	1	512	11 28 629 9	MONTAGETEILE
SCHRAUBENSICHERUNG	8700012	106	1	110	98 89 832	RS ZYLINDER+STEUERPLATT
SCHRAUBKARABINER	10473040	22	1	522	99 30 800 14	SPITZENENDSCHALTER EINBA
SCHRIFTZUG	10351188	8	2	2	01 38 281 14	LR 1300 SX
SCHRUMPFSCHLAUCH	603018114	18	0.2	515	10 59 863 3	PENDEL KPL
SCHUTZBLECH	10580585	12	1	41	10 51 961 6	OELKUEHLER EINBAU
SCHUTZGITTER	10566030	4	1	26	10 22 592 5	KUEHLER MOTOR
SCHUTZGITTER	11267554	9	1	257	10 57 423 7	KUEHLER MOTOR
SCHUTZKAPPE	10542325	96	1	352	11 27 973 6	KABINE EL
SCHUTZKAPPE	10801869	16	1	131	10 12 323 6	DRUCKEINSPEISEVENTIL
SCHUTZKAPPE	11266978	14	80	387	10 51 969 6	VERBINDUNG OW UW
SCHUTZKAPPE	7013456	3	1	183	50 04 624	OELABLASSSCHRAUBE
SCHUTZKAPPE	779013014	31	2	633	10 51 176 9	ZWISCHENHUB NADEL AL KP
SCHUTZLEITERKLEMME	10337303	50	1	708	10 56 013 7	FREMDEINSPEISUNG BATTERI
SCHUTZRING	10120443	3	1	188	10 12 134 5	RS KURBELWELLENDICHTUN
SCHUTZWALZE	939662601	26	1	450	11 23 820 3	ANLENKSTUECK KPL
SCHUTZWALZE	969641401	40	1	316	96 96 543 01	WINDENRAHMEN
SCHWENKTRAVERSE	11271490	2	1	595	11 27 148 8	AUFHAENGUNG
SCHWENKTRAVERSE	11274675	2	1	589	11 27 463 8	AUFHAENGUNG
SCHWERSPANNSTIFT	616155514	11	1	457	61 61 541 14	KABELTROMMEL
SCHWINGSYSTEM	10289992	50	1	692	10 04 363 3	FAHRERSITZ LUFTGEFEDERT
SCHWINGSYSTEM	10289993	50	1	380	10 22 506 8	FAHRERSITZ
SCHWUNGRAD ANBAU	10118929	530	1	173	10 14 032 7	DIESELMOTOR

Bezeichnung	Artikel	Pos.	Menge	Blatt	Baugruppe	Bezeichnung
SCHWUNGRAD VORM.	10118928	1	1	246	10 11 892 9	SCHWUNGRAD ANBAU
SCHWUNGRADGEHAEUSE AN	10115577	520	1	172	10 14 032 7	DIESELMOTOR
SCHWUNGRADGEHAEUSE VO	10115576	1	1	242	10 11 557 7	SCHWUNGRADGEHAEUSE AN
SCR KPL.	10144049	3	1	268	11 24 114 3	ABGASANLAGE
SECHSKANTMUTTER AEHNL.I	7381182	11	2	237	10 14 511 2	ABGASSTUTZEN ANBAU
SECHSKANTMUTTER DIN 439	10297942	6	1	81	11 21 990 5	VERSTELLUNG
SECHSKANTMUTTER DIN 985	11236108	20	12	586	79 04 112 14	UNTERFLASCHE
SECHSKANTMUTTER DIN 985	11236108	20	12	593	79 04 871 14	UNTERFLASCHE
SECHSKANTMUTTER DIN EN 1	11314341	12	3	477	11 23 749 8	AUFLAGE KPL
SECHSKANTMUTTER DIN EN 1	11314341	13	3	494	11 23 290 7	AUFLAGE KPL
SECHSKANTMUTTER DIN EN 1	11314341	17	4	495	11 23 292 2	AUFLAGE KPL
SECHSKANTMUTTER DIN EN 1	11314341	15	4	579	11 25 204 2	AUFLAGE KPL
SECHSKANTMUTTER EN 1661	4980805	15	1	204	10 13 382 3	ABSAUGPUMPE VORM.
SECHSKANTMUTTER EN 1661	4980805	4	3	222	10 14 736 4	LUFTANSAUGUNG ANBAU
SECHSKANTMUTTER EN 1661	4980805	7	1	239	10 14 584 5	GENERATOR VORM.
SECHSKANTMUTTER EN 1661	4980805	3	3	240	10 12 037 2	STARTER ANBAU
SECHSKANTMUTTER EN 1661	485569314	14	16	422	99 26 718 14	PODEST
SECHSKANTMUTTER EN 1661	485569314	14	16	624	11 24 575 5	PODEST
SECHSKANTMUTTER ISO 105	411901114	8	1	31	10 53 048 9	SICHERUNGSHALTER
SECHSKANTMUTTER ISO 105	411901114	80	4	165	10 51 948 1	ANSAUGROHR OEL
SECHSKANTMUTTER ISO 105	10540494	20	2	41	10 51 961 6	OELKUEHLER EINBAU
SECHSKANTMUTTER ISO 105	10540494	80	4	44	10 56 070 1	TANK HYDR KPL
SECHSKANTMUTTER ISO 105	10540494	5	1	50	10 55 268 1	MITNEHMER EINBAU
SECHSKANTMUTTER ISO 105	10540494	15	4	60	10 56 067 3	BATTERIE EINBAU KPL
SECHSKANTMUTTER ISO 105	10540494	82	18	255	11 24 114 0	KUEHLER EINBAU WASSER
SECHSKANTMUTTER ISO 105	10540494	81	10	261	11 24 114 1	KUEHLER EINBAU LADELUFT
SECHSKANTMUTTER ISO 105	10540494	80	2	268	11 24 114 3	ABGASANLAGE
SECHSKANTMUTTER ISO 105	10540494	106	2	276	11 24 114 5	ANLAGE HARNSTOFF EINBAU
SECHSKANTMUTTER ISO 105	10540494	83	6	280	11 24 114 6	ABDECKUNG
SECHSKANTMUTTER ISO 105	10540494	30	54	282	11 24 409 0	VERKLEIDUNG OW EINBAU KP
SECHSKANTMUTTER ISO 105	10540494	8	4	298	10 54 591 0	MOTORABDECKUNG
SECHSKANTMUTTER ISO 105	10540494	28	12	300	11 24 922 2	ABDECKUNG UNTERSEITE
SECHSKANTMUTTER ISO 105	10540494	76	83	304	11 24 483 7	BEF-TEILE OW
SECHSKANTMUTTER ISO 105	10540494	53	22	450	11 23 820 3	ANLENKSTUECK KPL
SECHSKANTMUTTER ISO 105	10540494	15	2	479	99 29 588 14	AUFLAGE
SECHSKANTMUTTER ISO 105	10540494	15	2	480	10 35 063 3	HALTERUNG
SECHSKANTMUTTER ISO 105	10540494	18	2	487	11 28 397 7	AUFFANGWANNE KPL
SECHSKANTMUTTER ISO 105	10540494	18	2	488	11 28 397 8	AUFFANGWANNE KPL
SECHSKANTMUTTER ISO 105	10540494	18	4	489	11 28 399 5	AUFFANGWANNE KPL
SECHSKANTMUTTER ISO 105	10540494	18	4	490	11 28 399 7	AUFFANGWANNE KPL
SECHSKANTMUTTER ISO 105	10540494	17	2	491	11 28 794 6	TRANSPORTSICHERUNG
SECHSKANTMUTTER ISO 105	10540494	21	1	515	10 59 863 3	PENDEL KPL
SECHSKANTMUTTER ISO 105	10540494	11	4	516	11 28 357 6	MONTAGETEILE
SECHSKANTMUTTER ISO 105	10540494	12	1	522	99 30 800 14	SPITZENENDSCHALTER EINBA
SECHSKANTMUTTER ISO 105	10540494	18	4	554	11 28 979 0	GITTERROSTTRAEGER
SECHSKANTMUTTER ISO 105	10540494	13	2	556	11 28 544 3	ABSTUETZUNG KPL
SECHSKANTMUTTER ISO 105	10540494	17	2	557	11 28 982 7	TRANSPORTSICHERUNG
SECHSKANTMUTTER ISO 105	10540494	59	4	570	11 28 774 6	MONTAGETEILE
SECHSKANTMUTTER ISO 105	10540494	47	1	577	99 48 521 14	SPITZEN AL KPL
SECHSKANTMUTTER ISO 105	10540494	39	54	621	10 55 372 1	DACHGELAENDER NRS
SECHSKANTMUTTER ISO 105	10540494	15	1	633	10 51 176 9	ZWISCHENHUB NADEL AL KP
SECHSKANTMUTTER ISO 105	10540494	14	1	648	99 35 606 14	LASCHE KPL
SECHSKANTMUTTER ISO 105	10540494	9	2	650	11 23 619 7	SELBSTVERLADESYSTEM NR
SECHSKANTMUTTER ISO 105	10540494	21	1	680	11 22 344 2	KAMERA EINBAU
SECHSKANTMUTTER ISO 105	10540494	16	5	705	11 26 771 6	MONTAGETEILE
SECHSKANTMUTTER ISO 105	10540495	36	4	58	10 58 163 4	KABINENAUFHAENGUNG KPL
SECHSKANTMUTTER ISO 105	10540495	20	2	60	10 56 067 3	BATTERIE EINBAU KPL
SECHSKANTMUTTER ISO 105	10540495	81	6	165	10 51 948 1	ANSAUGROHR OEL
SECHSKANTMUTTER ISO 105	10540495	82	4	268	11 24 114 3	ABGASANLAGE
SECHSKANTMUTTER ISO 105	10540495	105	1	276	11 24 114 5	ANLAGE HARNSTOFF EINBAU

Bezeichnung	Artikel	Pos.	Menge	Blatt	Baugruppe	Bezeichnung
SECHSKANTMUTTER ISO 105	10540495	70	8	304	11 24 483 7	BEF-TEILE OW
SECHSKANTMUTTER ISO 105	10540495	23	2	320	10 51 968 6	EZW OW EINBAU KPL
SECHSKANTMUTTER ISO 105	10540495	19	144	408	10 55 876 0	RAUPENTRAEGER RE KPL
SECHSKANTMUTTER ISO 105	10540495	19	144	417	10 55 876 1	RAUPENTRAEGER LI KPL
SECHSKANTMUTTER ISO 105	10540495	24	2	450	11 23 820 3	ANLENKSTUECK KPL
SECHSKANTMUTTER ISO 105	10540495	33	4	525	11 24 336 5	ANLENKSTUECK NADEL KPL
SECHSKANTMUTTER ISO 105	10540495	33	4	526	10 53 140 9	ANLENKSTUECK EL
SECHSKANTMUTTER ISO 105	10540495	46	8	541	11 29 938 4	MONTAGETEILE
SECHSKANTMUTTER ISO 105	10540495	56	10	621	10 55 372 1	DACHGELAENDER NRS
SECHSKANTMUTTER ISO 105	10540495	16	4	633	10 51 176 9	ZWISCHENHUB NADEL AL KP
SECHSKANTMUTTER ISO 105	10540495	26	2	686	10 58 064 7	VIDEOUEBERWACHUNGSANL
SECHSKANTMUTTER ISO 105	10544155	36	8	450	11 23 820 3	ANLENKSTUECK KPL
SECHSKANTMUTTER ISO 105	10544155	29	4	485	11 28 390 8	AL BEGEHUNG
SECHSKANTMUTTER ISO 105	10544155	29	4	499	11 28 583 8	AL BEGEHUNG
SECHSKANTMUTTER ISO 105	10544155	29	4	505	11 28 626 1	AL BEGEHUNG
SECHSKANTMUTTER ISO 105	10544155	58	2	533	11 29 426 7	MONTAGETEILE
SECHSKANTMUTTER ISO 105	10544157	18	4	606	10 51 743 9	SEILEINZIEHWINDE KPL NRS
SECHSKANTMUTTER ISO 105	10544159	30	8	644	10 51 971 3	SELBSTVERLADESYSTEM NR
SECHSKANTMUTTER ISO 1051	10540484	15	2	53	11 26 557 2	MONTAGETEILE
SECHSKANTMUTTER ISO 1051	10540484	21	2	60	10 56 067 3	BATTERIE EINBAU KPL
SECHSKANTMUTTER ISO 1051	10540484	12	4	61	11 31 093 2	ENDSCHALTER EINBAU
SECHSKANTMUTTER ISO 1051	10540484	47	4	350	11 29 327 3	KABINE KPL
SECHSKANTMUTTER ISO 1051	10540484	67	8	450	11 23 820 3	ANLENKSTUECK KPL
SECHSKANTMUTTER ISO 1051	10540484	43	4	512	11 28 629 9	MONTAGETEILE
SECHSKANTMUTTER ISO 1051	10540484	19	8	513	11 28 610 5	ARRETIERUNG KPL
SECHSKANTMUTTER ISO 1051	10540484	52	4	633	10 51 176 9	ZWISCHENHUB NADEL AL KP
SECHSKANTMUTTER ISO 1051	10540492	80	9	255	11 24 114 0	KUEHLER EINBAU WASSER
SECHSKANTMUTTER ISO 1051	10540492	84	3	268	11 24 114 3	ABGASANLAGE
SECHSKANTMUTTER ISO 1051	10540492	101	14	276	11 24 114 5	ANLAGE HARNSTOFF EINBAU
SECHSKANTMUTTER ISO 1051	10540492	46	10	284	11 24 409 0	VERKLEIDUNG OW EINBAU KP
SECHSKANTMUTTER ISO 1051	10540492	84	3	304	11 24 483 7	BEF-TEILE OW
SECHSKANTMUTTER ISO 1051	10540492	39	6	408	10 55 876 0	RAUPENTRAEGER RE KPL
SECHSKANTMUTTER ISO 1051	10540492	39	6	417	10 55 876 1	RAUPENTRAEGER LI KPL
SECHSKANTMUTTER ISO 1051	10540492	83	32	451	11 23 820 3	ANLENKSTUECK KPL
SECHSKANTMUTTER ISO 1051	10540492	14	18	459	10 58 193 7	GITTERROST KPL
SECHSKANTMUTTER ISO 1051	10540492	31	8	473	11 24 444 4	A-BOCK 1 KPL
SECHSKANTMUTTER ISO 1051	10540492	19	1	487	11 28 397 7	AUFFANGWANNE KPL
SECHSKANTMUTTER ISO 1051	10540492	19	1	488	11 28 397 8	AUFFANGWANNE KPL
SECHSKANTMUTTER ISO 1051	10540492	19	1	489	11 28 399 5	AUFFANGWANNE KPL
SECHSKANTMUTTER ISO 1051	10540492	19	1	490	11 28 399 7	AUFFANGWANNE KPL
SECHSKANTMUTTER ISO 1051	10540492	70	8	525	11 24 336 5	ANLENKSTUECK NADEL KPL
SECHSKANTMUTTER ISO 1051	10540492	23	4	526	10 53 140 9	ANLENKSTUECK EL
SECHSKANTMUTTER ISO 1051	10540492	11	4	550	99 31 679 14	ABSTUETZUNG KPL
SECHSKANTMUTTER ISO 1051	10540492	57	4	570	11 28 774 6	MONTAGETEILE
SECHSKANTMUTTER ISO 1051	10540492	35	24	621	10 55 372 1	DACHGELAENDER NRS
SECHSKANTMUTTER ISO 1051	10540492	19	3	680	11 22 344 2	KAMERA EINBAU
SECHSKANTMUTTER ISO 1051	10540492	23	6	686	10 58 064 7	VIDEOUEBERWACHUNGSANL
SECHSKANTMUTTER ISO 1051	10540493	16	2	53	11 26 557 2	MONTAGETEILE
SECHSKANTMUTTER ISO 1051	10540493	17	2	58	10 58 163 4	KABINENAUFHAENGUNG KPL
SECHSKANTMUTTER ISO 1051	10540493	84	8	164	11 24 113 8	MOTORLAGER KPL
SECHSKANTMUTTER ISO 1051	10540493	81	12	255	11 24 114 0	KUEHLER EINBAU WASSER
SECHSKANTMUTTER ISO 1051	10540493	80	14	261	11 24 114 1	KUEHLER EINBAU LADELUFT
SECHSKANTMUTTER ISO 1051	10540493	80	2	262	11 28 574 7	WP
SECHSKANTMUTTER ISO 1051	10540493	80	4	264	11 24 114 2	ANSAUGANLAGE LUFT
SECHSKANTMUTTER ISO 1051	10540493	80	2	270	11 24 114 4	KRAFTSTOFFANLAGE
SECHSKANTMUTTER ISO 1051	10540493	102	6	276	11 24 114 5	ANLAGE HARNSTOFF EINBAU
SECHSKANTMUTTER ISO 1051	10540493	41	23	284	11 24 409 0	VERKLEIDUNG OW EINBAU KP
SECHSKANTMUTTER ISO 1051	10540493	85	37	304	11 24 483 7	BEF-TEILE OW
SECHSKANTMUTTER ISO 1051	10540493	26	4	320	10 51 968 6	EZW OW EINBAU KPL
SECHSKANTMUTTER ISO 1051	10540493	13	2	335	99 29 386 14	KONSOLE KPL

Bezeichnung	Artikel	Pos.	Menge	Blatt	Baugruppe	Bezeichnung
SECHSKANTMUTTER ISO 1051	10540493	13	2	336	99 29 434 14	KONSOLE KPL
SECHSKANTMUTTER ISO 1051	10540493	16	8	422	99 26 718 14	PODEST
SECHSKANTMUTTER ISO 1051	10540493	25	64	450	11 23 820 3	ANLENKSTUECK KPL
SECHSKANTMUTTER ISO 1051	10540493	19	6	459	10 58 193 7	GITTERROST KPL
SECHSKANTMUTTER ISO 1051	10540493	15	8	461	99 34 198 14	SCHILD LIEBHERR
SECHSKANTMUTTER ISO 1051	10540493	30	6	485	11 28 390 8	AL BEGEHUNG
SECHSKANTMUTTER ISO 1051	10540493	14	2	486	11 28 391 3	BEFESTIGUNGSCHELLE
SECHSKANTMUTTER ISO 1051	10540493	16	2	495	11 23 292 2	AUFLAGE KPL
SECHSKANTMUTTER ISO 1051	10540493	30	6	499	11 28 583 8	AL BEGEHUNG
SECHSKANTMUTTER ISO 1051	10540493	30	6	505	11 28 626 1	AL BEGEHUNG
SECHSKANTMUTTER ISO 1051	10540493	44	4	512	11 28 629 9	MONTAGETEILE
SECHSKANTMUTTER ISO 1051	10540493	24	2	522	99 30 800 14	SPITZENENDSCHALTER EINBA
SECHSKANTMUTTER ISO 1051	10540493	21	11	525	11 24 336 5	ANLENKSTUECK NADEL KPL
SECHSKANTMUTTER ISO 1051	10540493	13	3	526	10 53 140 9	ANLENKSTUECK EL
SECHSKANTMUTTER ISO 1051	10540493	40	2	541	11 29 938 4	MONTAGETEILE
SECHSKANTMUTTER ISO 1051	10540493	19	4	554	11 28 979 0	GITTERROSTTRAEGER
SECHSKANTMUTTER ISO 1051	10540493	14	2	555	11 28 667 9	BEFESTIGUNGSCHELLE
SECHSKANTMUTTER ISO 1051	10540493	58	5	570	11 28 774 6	MONTAGETEILE
SECHSKANTMUTTER ISO 1051	10540493	39	12	577	99 48 521 14	SPITZEN AL KPL
SECHSKANTMUTTER ISO 1051	10540493	81	7	604	11 29 444 5	HEIZUNG NRS
SECHSKANTMUTTER ISO 1051	10540493	42	40	621	10 55 372 1	DACHGELAENDER NRS
SECHSKANTMUTTER ISO 1051	10540493	12	12	623	11 24 147 8	UW PODEST
SECHSKANTMUTTER ISO 1051	10540493	12	12	624	11 24 575 5	PODEST
SECHSKANTMUTTER ISO 1051	10540493	17	2	633	10 51 176 9	ZWISCHENHUB NADEL AL KP
SECHSKANTMUTTER ISO 1051	10540493	35	2	637	99 10 116 14	SEILFUEHRUNG
SECHSKANTMUTTER ISO 1051	10540493	6	4	650	11 23 619 7	SELBSTVERLADESYSTEM NR
SECHSKANTMUTTER ISO 1051	10540493	24	2	686	10 58 064 7	VIDEOUEBERWACHUNGSANL
SECHSKANTMUTTER ISO 4032	4000383	19	4	422	99 26 718 14	PODEST
SECHSKANTMUTTER ISO 4032	4000383	10	4	550	99 31 679 14	ABSTUETZUNG KPL
SECHSKANTMUTTER ISO 4032	4000383	5	2	635	95 34 317 03	KABELHALTER NRS
SECHSKANTMUTTER ISO 403	411514614	80	6	48	10 56 073 3	KRAFTSTOFFTANK KPL
SECHSKANTMUTTER ISO 403	411514614	82	8	164	11 24 113 8	MOTORLAGER KPL
SECHSKANTMUTTER ISO 403	411514614	81	8	268	11 24 114 3	ABGASANLAGE
SECHSKANTMUTTER ISO 403	411514614	104	6	276	11 24 114 5	ANLAGE HARNSTOFF EINBAU
SECHSKANTMUTTER ISO 403	411514614	20	4	298	10 54 591 0	MOTORABDECKUNG
SECHSKANTMUTTER ISO 403	411514614	32	1	350	11 29 327 3	KABINE KPL
SECHSKANTMUTTER ISO 403	411514614	12	2	556	11 28 544 3	ABSTUETZUNG KPL
SECHSKANTMUTTER ISO 403	411514614	19	1	574	10 55 753 7	SPITZENENDSCHALTER LI EIN
SECHSKANTMUTTER ISO 403	411514614	19	1	575	10 55 757 6	SPITZENENDSCHALTER RE E
SECHSKANTMUTTER ISO 403	411514614	5	2	706	10 52 293 0	DW GEBER NRS
SECHSKANTMUTTER ISO 403	411516914	85	8	164	11 24 113 8	MOTORLAGER KPL
SECHSKANTMUTTER ISO 403	411516914	43	8	408	10 55 876 0	RAUPENTRAEGER RE KPL
SECHSKANTMUTTER ISO 403	411516914	44	8	417	10 55 876 1	RAUPENTRAEGER LI KPL
SECHSKANTMUTTER ISO 403	411516914	25	8	419	11 23 548 1	MITTELTEIL KPL
SECHSKANTMUTTER ISO 403	411516914	15	2	537	99 35 031 14	SEILSCHUTZ KPL
SECHSKANTMUTTER ISO 403	411516914	15	2	574	10 55 753 7	SPITZENENDSCHALTER LI EIN
SECHSKANTMUTTER ISO 403	411516914	15	2	575	10 55 757 6	SPITZENENDSCHALTER RE E
SECHSKANTMUTTER ISO 403	411516914	43	2	577	99 48 521 14	SPITZEN AL KPL
SECHSKANTMUTTER ISO 4032	10544154	80	10	164	11 24 113 8	MOTORLAGER KPL
SECHSKANTMUTTER ISO 4032	10544158	81	2	164	11 24 113 8	MOTORLAGER KPL
SECHSKANTMUTTER ISO 4032	485546514	50	12	350	11 29 327 3	KABINE KPL
SECHSKANTMUTTER ISO 4032	485546514	7	4	386	11 30 962 5	HALTER KPL
SECHSKANTMUTTER ISO 4032	411551214	2	9	384	97 07 857 03	LIBELLE EINBAU
SECHSKANTMUTTER ISO 4032	411551214	43	2	715	10 52 155 9	MODUL BETANKUNGSANLAG
SECHSKANTMUTTER ISO 4032	411551114	100	2	276	11 24 114 5	ANLAGE HARNSTOFF EINBAU
SECHSKANTMUTTER ISO 4032	411551114	31	9	665	11 89 568 6	SELBSTVERLADESYSTEM NR
SECHSKANTMUTTER ISO 4032	411517114	56	1	350	11 29 327 3	KABINE KPL
SECHSKANTMUTTER ISO 4032	411517114	6	4	385	10 53 756 0	LEUCHTENHALTER KPL
SECHSKANTMUTTER ISO 4032	411517114	32	8	419	11 23 548 1	MITTELTEIL KPL
SECHSKANTMUTTER ISO 4032	411517114	4	4	599	11 22 322 6	MODEM KPL NRS

Bezeichnung	Artikel	Pos.	Menge	Blatt	Baugruppe	Bezeichnung
SECHSKANTMUTTER ISO 4032	411517114	80	1	604	11 29 444 5	HEIZUNG NRS
SECHSKANTMUTTER ISO 4032	411517114	47	10	621	10 55 372 1	DACHGELAENDER NRS
SECHSKANTMUTTER ISO 4032	411515014	83	4	164	11 24 113 8	MOTORLAGER KPL
SECHSKANTMUTTER ISO 4032	411515014	57	7	284	11 24 409 0	VERKLEIDUNG OW EINBAU KP
SECHSKANTMUTTER ISO 4032	411515014	15	26	298	10 54 591 0	MOTORABDECKUNG
SECHSKANTMUTTER ISO 4032	411515014	38	4	350	11 29 327 3	KABINE KPL
SECHSKANTMUTTER ISO 4032	411515014	20	2	574	10 55 753 7	SPITZENENDSCHALTER LI EIN
SECHSKANTMUTTER ISO 4032	411515014	20	2	575	10 55 757 6	SPITZENENDSCHALTER RE E
SECHSKANTMUTTER ISO 4032	411515014	61	2	621	10 55 372 1	DACHGELAENDER NRS
SECHSKANTMUTTER ISO 4032	411515014	15	4	624	11 24 575 5	PODEST
SECHSKANTMUTTER ISO 4032	411515014	15	2	710	10 52 155 4	BETANKUNGSANLAGE NRS
SECHSKANTMUTTER ISO 403	4900125	30	2	97	10 11 835 0	ANSCHLUSSGEHAEUSE
SECHSKANTMUTTER ISO 704	411880614	83	4	268	11 24 114 3	ABGASANLAGE
SECHSKANTMUTTER ISO 8673	4980548	26	8	95	10 11 834 9	DOPPELV.PUMPE
SECHSKANTMUTTER ISO 867	4980986	20	1	133	10 12 226 2	RS VERSTELLUNG
SECHSKANTMUTTER M6	11290855	470	2	78	11 24 682 0	VERTEILERGETRIEBE
SECHSKANTRIPPENMUTTER	10003366	3	1	223	90 78 314	HEIZFLANSCH ANBAU
SECHSKANTSCHRAUBE ASM	409878414	64	4	167	10 57 532 2	ANSAUGROHR OEL KPL
SECHSKANTSCHRAUBE ASME	409878214	62	12	167	10 57 532 2	ANSAUGROHR OEL KPL
SECHSKANTSCHRAUBE DIN 6	11004752	3	2	182	10 14 861 5	OELWANNE VORM.
SECHSKANTSCHRAUBE DIN 6	11004752	2	3	203	10 13 394 7	ABSAUGPUMPE MIT BEFEST.
SECHSKANTSCHRAUBE DIN	10336008	3	3	252	10 14 637 4	VERSCHLUSSTEILE
SECHSKANTSCHRAUBE DIN 6	10219458	7	4	237	10 14 511 2	ABGASSTUTZEN ANBAU
SECHSKANTSCHRAUBE DIN 6	10219458	3	2	239	10 14 584 5	GENERATOR VORM.
SECHSKANTSCHRAUBE DIN	10333464	2	3	214	10 14 679 7	KRAFTSTOFF-FEINFILTERAN
SECHSKANTSCHRAUBE DIN	10112497	17	1	204	10 13 382 3	ABSAUGPUMPE VORM.
SECHSKANTSCHRAUBE DIN	10112497	2	4	226	10 14 286 0	KLIMAKOMPRESSOR ANBAU
SECHSKANTSCHRAUBE DIN 6	10035580	6	1	175	10 14 768 6	AGGREGATETRAEGER ANBA
SECHSKANTSCHRAUBE DIN 6	10114153	5	9	175	10 14 768 6	AGGREGATETRAEGER ANBA
SECHSKANTSCHRAUBE DIN	10489016	4	6	220	10 14 736 6	LUFTANSAUGROHR ANBAU
SECHSKANTSCHRAUBE DIN	11181806	2	2	241	10 14 286 4	TRANSPORTVORRICHTUNG
SECHSKANTSCHRAUBE DIN 6	10018711	2	4	223	90 78 314	HEIZFLANSCH ANBAU
SECHSKANTSCHRAUBE DIN 6	10005713	2	1	202	10 13 394 5	SCHMIEROELPUMPE
SECHSKANTSCHRAUBE DIN 6	10218013	3	18	199	10 12 948 1	OELKUEHLER ANBAU
SECHSKANTSCHRAUBE DIN 6	11066361	3	2	202	10 13 394 5	SCHMIEROELPUMPE
SECHSKANTSCHRAUBE DIN	11237759	9	4	586	79 04 112 14	UNTERFLASCHE
SECHSKANTSCHRAUBE DIN	11490268	9	4	593	79 04 871 14	UNTERFLASCHE
SECHSKANTSCHRAUBE DIN	10005511	9	1	182	10 14 861 5	OELWANNE VORM.
SECHSKANTSCHRAUBE EN 16	10037312	4	8	175	10 14 768 6	AGGREGATETRAEGER ANBA
SECHSKANTSCHRAUBE EN 1	10113710	4	1	239	10 14 584 5	GENERATOR VORM.
SECHSKANTSCHRAUBE EN 16	10030518	2	4	228	10 14 611 7	ABDECKUNG ANBAU
SECHSKANTSCHRAUBE EN 16	10030518	18	1	238	10 14 622 4	TAKTVENTIL
SECHSKANTSCHRAUBE EN 16	10030518	46	1	249	10 13 555 3	KABELSATZ ANBAU
SECHSKANTSCHRAUBE EN 16	406550714	27	84	300	11 24 922 2	ABDECKUNG UNTERSEITE
SECHSKANTSCHRAUBE EN 16	10014638	3	6	220	10 14 736 6	LUFTANSAUGROHR ANBAU
SECHSKANTSCHRAUBE EN 16	10014638	4	2	226	10 14 286 0	KLIMAKOMPRESSOR ANBAU
SECHSKANTSCHRAUBE EN 16	10101657	6	1	226	10 14 286 0	KLIMAKOMPRESSOR ANBAU
SECHSKANTSCHRAUBE EN 16	10101657	3	4	228	10 14 611 7	ABDECKUNG ANBAU
SECHSKANTSCHRAUBE EN 1	10045355	5	2	239	10 14 584 5	GENERATOR VORM.
SECHSKANTSCHRAUBE EN 16	407350108	15	2	238	10 14 622 4	TAKTVENTIL
SECHSKANTSCHRAUBE EN 1	407350208	4	1	195	10 13 475 1	ZYLINDERKOPFDECKEL ANBA
SECHSKANTSCHRAUBE EN 1	407350208	6	1	196	10 12 653 5	ZYLINDERKOPFDECKEL ANBA
SECHSKANTSCHRAUBE EN 1	407350208	5	1	198	10 13 469 6	ZYLINDERKOPFDECKEL ANBA
SECHSKANTSCHRAUBE EN 1	407350208	22	1	217	10 14 588 5	LECKOELRUECKLAUF
SECHSKANTSCHRAUBE EN 1	407350208	16	8	238	10 14 622 4	TAKTVENTIL
SECHSKANTSCHRAUBE EN 16	10017158	5	1	181	10 14 844 4	OELWANNE MIT BEFEST.
SECHSKANTSCHRAUBE EN 1	10005078	12	3	186	10 14 671 6	OELLEITUNG VORM.
SECHSKANTSCHRAUBE EN 1	10005078	18	1	217	10 14 588 5	LECKOELRUECKLAUF
SECHSKANTSCHRAUBE EN 1	10005078	17	4	238	10 14 622 4	TAKTVENTIL
SECHSKANTSCHRAUBE EN 1	10016906	4	2	214	10 14 679 7	KRAFTSTOFF-FEINFILTERAN

Bezeichnung	Artikel	Pos.	Menge	Blatt	Baugruppe	Bezeichnung
SECHSKANTSCHRAUBE EN 1	10016906	15	2	221	10 14 736 9	ANSAUGSTUTZEN ANBAU
SECHSKANTSCHRAUBE EN 1	10016906	3	4	243	10 11 912 8	VERSCHLUSSTEILE
SECHSKANTSCHRAUBE EN 1	10016906	3	1	244	10 12 843 9	VERSCHLUSSTEILE
SECHSKANTSCHRAUBE EN 1	10009007	2	5	229	10 14 273 4	WASSERPUMPE MIT BEFEST.
SECHSKANTSCHRAUBE EN 1	10009007	3	1	233	10 14 274 4	KUEHLWASSERENTLUEFTUN
SECHSKANTSCHRAUBE EN 1	10007782	10	6	179	10 14 201 8	KURBELGEHAEUSEENTLUEF
SECHSKANTSCHRAUBE EN 1	10007782	13	3	182	10 14 861 5	OELWANNE VORM.
SECHSKANTSCHRAUBE EN 1	10007782	10	2	216	10 14 333 9	KRAFTSTOFFLEITUNGEN
SECHSKANTSCHRAUBE EN 1	10113711	2	33	181	10 14 844 4	OELWANNE MIT BEFEST.
SECHSKANTSCHRAUBE EN 1	10016907	11	3	179	10 14 201 8	KURBELGEHAEUSEENTLUEF
SECHSKANTSCHRAUBE EN 1	10005073	4	4	200	10 12 948 0	OELKUEHLER VORM.
SECHSKANTSCHRAUBE EN 1	10027420	6	1	221	10 14 736 9	ANSAUGSTUTZEN ANBAU
SECHSKANTSCHRAUBE EN 1	10100304	4	2	181	10 14 844 4	OELWANNE MIT BEFEST.
SECHSKANTSCHRAUBE EN 1	10100303	3	5	195	10 13 475 1	ZYLINDERKOPFDECKEL ANBA
SECHSKANTSCHRAUBE EN 1	10100303	3	5	196	10 12 653 5	ZYLINDERKOPFDECKEL ANBA
SECHSKANTSCHRAUBE EN 1	10100303	4	5	198	10 13 469 6	ZYLINDERKOPFDECKEL ANBA
SECHSKANTSCHRAUBE ISO	4002195	61	4	165	10 51 948 1	ANSAUGROHR OEL
SECHSKANTSCHRAUBE ISO	4002195	301	2	652	10 51 973 8	SELBSTVERLADESYSTEM H
SECHSKANTSCHRAUBE ISO 4	4062009	61	4	168	10 58 017 0	RUECKLAUFROHR
SECHSKANTSCHRAUBE ISO	10013916	4	1	225	90 72 906	ZWISCHENRAD KPL
SECHSKANTSCHRAUBE ISO 4	460023503	60	8	10	11 29 618 6	OW HYDR
SECHSKANTSCHRAUBE ISO	10543975	75	8	451	11 23 820 3	ANLENKSTUECK KPL
SECHSKANTSCHRAUBE ISO	10543975	22	4	485	11 28 390 8	AL BEGEHUNG
SECHSKANTSCHRAUBE ISO	10543975	22	4	499	11 28 583 8	AL BEGEHUNG
SECHSKANTSCHRAUBE ISO	10543975	22	4	505	11 28 626 1	AL BEGEHUNG
SECHSKANTSCHRAUBE ISO	10544017	63	2	164	11 24 113 8	MOTORLAGER KPL
SECHSKANTSCHRAUBE ISO	11246658	10	64	408	10 55 876 0	RAUPENTRAEGER RE KPL
SECHSKANTSCHRAUBE ISO	11246658	10	64	417	10 55 876 1	RAUPENTRAEGER LI KPL
SECHSKANTSCHRAUBE ISO 4	406144514	20	6	309	99 29 803 14	VERZURRUNG BALLAST
SECHSKANTSCHRAUBE ISO 4	10538824	51	6	164	11 24 113 8	MOTORLAGER KPL
SECHSKANTSCHRAUBE ISO 4	10538824	61	2	268	11 24 114 3	ABGASANLAGE
SECHSKANTSCHRAUBE ISO 4	10539960	13	1	648	99 35 606 14	LASCHE KPL
SECHSKANTSCHRAUBE ISO 4	10538826	40	4	621	10 55 372 1	DACHGELAENDER NRS
SECHSKANTSCHRAUBE ISO	406527314	64	2	164	11 24 113 8	MOTORLAGER KPL
SECHSKANTSCHRAUBE ISO	406527314	29	8	512	11 28 629 9	MONTAGETEILE
SECHSKANTSCHRAUBE ISO	406527314	11	4	513	11 28 610 5	ARRETIERUNG KPL
SECHSKANTSCHRAUBE ISO	406527414	16	8	41	10 51 961 6	OELKUEHLER EINBAU
SECHSKANTSCHRAUBE ISO	406527414	3	8	62	10 56 069 4	MODULE EINBAU
SECHSKANTSCHRAUBE ISO	406527414	57	16	164	11 24 113 8	MOTORLAGER KPL
SECHSKANTSCHRAUBE ISO	406518714	17	8	41	10 51 961 6	OELKUEHLER EINBAU
SECHSKANTSCHRAUBE ISO	406518714	56	4	58	10 58 163 4	KABINENAUFHAENGUNG KPL
SECHSKANTSCHRAUBE ISO	406518714	16	4	60	10 56 067 3	BATTERIE EINBAU KPL
SECHSKANTSCHRAUBE ISO	406518714	61	2	264	11 24 114 2	ANSAUGANLAGE LUFT
SECHSKANTSCHRAUBE ISO	406518714	62	10	280	11 24 114 6	ABDECKUNG
SECHSKANTSCHRAUBE ISO	406518714	25	12	350	11 29 327 3	KABINE KPL
SECHSKANTSCHRAUBE ISO	406518714	17	2	450	11 23 820 3	ANLENKSTUECK KPL
SECHSKANTSCHRAUBE ISO	406518714	3	3	475	99 14 137 14	UMLENKROLLE KPL
SECHSKANTSCHRAUBE ISO	406518714	16	8	577	99 48 521 14	SPITZEN AL KPL
SECHSKANTSCHRAUBE ISO	406518714	20	1	680	11 22 344 2	KAMERA EINBAU
SECHSKANTSCHRAUBE ISO 4	4066093	64	8	168	10 58 017 0	RUECKLAUFROHR
SECHSKANTSCHRAUBE ISO	406511914	60	12	44	10 56 070 1	TANK HYDR KPL
SECHSKANTSCHRAUBE ISO	406511914	60	6	167	10 57 532 2	ANSAUGROHR OEL KPL
SECHSKANTSCHRAUBE ISO	406511914	60	1	169	11 24 113 9	MOTORVORMONTAGE
SECHSKANTSCHRAUBE ISO	406511914	65	16	254	11 24 114 0	KUEHLER EINBAU WASSER
SECHSKANTSCHRAUBE ISO	406511914	63	8	261	11 24 114 1	KUEHLER EINBAU LADELUFT
SECHSKANTSCHRAUBE ISO	406511914	87	2	276	11 24 114 5	ANLAGE HARNSTOFF EINBAU
SECHSKANTSCHRAUBE ISO	406511914	61	40	280	11 24 114 6	ABDECKUNG
SECHSKANTSCHRAUBE ISO	406511914	23	35	282	11 24 409 0	VERKLEIDUNG OW EINBAU KP
SECHSKANTSCHRAUBE ISO	406511914	79	24	304	11 24 483 7	BEF-TEILE OW
SECHSKANTSCHRAUBE ISO	406511914	30	2	450	11 23 820 3	ANLENKSTUECK KPL

Bezeichnung	Artikel	Pos.	Menge	Blatt	Baugruppe	Bezeichnung
SECHSKANTSCHRAUBE ISO	406511914	44	4	533	11 29 426 7	MONTAGETEILE
SECHSKANTSCHRAUBE ISO	406511914	19	12	606	10 51 743 9	SEILEINZIEHWINDE KPL NRS
SECHSKANTSCHRAUBE ISO	406511914	4	2	635	95 34 317 03	KABELHALTER NRS
SECHSKANTSCHRAUBE ISO	406511914	11	3	705	11 26 771 6	MONTAGETEILE
SECHSKANTSCHRAUBE ISO 4	4066098	67	48	10	11 29 618 6	OW HYDR
SECHSKANTSCHRAUBE ISO 4	4066098	59	12	75	11 24 773 5	AGGREGAT HYDR
SECHSKANTSCHRAUBE ISO 4	4066098	63	12	168	10 58 017 0	RUECKLAUFROHR
SECHSKANTSCHRAUBE ISO	406511614	18	2	41	10 51 961 6	OELKUEHLER EINBAU
SECHSKANTSCHRAUBE ISO	406511614	53	2	164	11 24 113 8	MOTORLAGER KPL
SECHSKANTSCHRAUBE ISO	406511614	66	8	254	11 24 114 0	KUEHLER EINBAU WASSER
SECHSKANTSCHRAUBE ISO	406511614	60	14	268	11 24 114 3	ABGASANLAGE
SECHSKANTSCHRAUBE ISO	406511614	60	4	280	11 24 114 6	ABDECKUNG
SECHSKANTSCHRAUBE ISO	406511614	31	28	282	11 24 409 0	VERKLEIDUNG OW EINBAU KP
SECHSKANTSCHRAUBE ISO	406511614	80	46	304	11 24 483 7	BEF-TEILE OW
SECHSKANTSCHRAUBE ISO	406511614	13	16	308	10 52 656 0	MONTAGETEILE
SECHSKANTSCHRAUBE ISO	406511614	94	2	451	11 23 820 3	ANLENKSTUECK KPL
SECHSKANTSCHRAUBE ISO	406511614	16	2	491	11 28 794 6	TRANSPORTSICHERUNG
SECHSKANTSCHRAUBE ISO	406511614	14	4	554	11 28 979 0	GITTERROSTTRAEGER
SECHSKANTSCHRAUBE ISO	406511614	16	2	557	11 28 982 7	TRANSPORTSICHERUNG
SECHSKANTSCHRAUBE ISO 4	4001246	55	16	10	11 29 618 6	OW HYDR
SECHSKANTSCHRAUBE ISO 4	4001246	52	4	75	11 24 773 5	AGGREGAT HYDR
SECHSKANTSCHRAUBE ISO 4	4001246	6	16	344	10 55 216 1	VERROHRUNG HYDR
SECHSKANTSCHRAUBE ISO 4	4001246	670	4	465	10 51 959 1	VERROHRUNG HYDR
SECHSKANTSCHRAUBE ISO 4	4001246	616	4	652	10 51 973 8	SELBSTVERLADESYSTEM H
SECHSKANTSCHRAUBE ISO	406509314	67	6	254	11 24 114 0	KUEHLER EINBAU WASSER
SECHSKANTSCHRAUBE ISO	406509314	64	2	261	11 24 114 1	KUEHLER EINBAU LADELUFT
SECHSKANTSCHRAUBE ISO	406509314	63	2	280	11 24 114 6	ABDECKUNG
SECHSKANTSCHRAUBE ISO	406509314	17	12	298	10 54 591 0	MOTORABDECKUNG
SECHSKANTSCHRAUBE ISO	406509314	81	23	304	11 24 483 7	BEF-TEILE OW
SECHSKANTSCHRAUBE ISO	406509314	87	16	451	11 23 820 3	ANLENKSTUECK KPL
SECHSKANTSCHRAUBE ISO	406509314	14	2	487	11 28 397 7	AUFFANGWANNE KPL
SECHSKANTSCHRAUBE ISO	406509314	14	2	488	11 28 397 8	AUFFANGWANNE KPL
SECHSKANTSCHRAUBE ISO	406509314	14	4	489	11 28 399 5	AUFFANGWANNE KPL
SECHSKANTSCHRAUBE ISO	406509314	14	4	490	11 28 399 7	AUFFANGWANNE KPL
SECHSKANTSCHRAUBE ISO	406509314	12	2	706	10 52 293 0	DW GEBER NRS
SECHSKANTSCHRAUBE ISO	10539971	11	1	522	99 30 800 14	SPITZENENDSCHALTER EINBA
SECHSKANTSCHRAUBE ISO	10539971	14	1	574	10 55 753 7	SPITZENENDSCHALTER LI EIN
SECHSKANTSCHRAUBE ISO	10539971	14	1	575	10 55 757 6	SPITZENENDSCHALTER RE E
SECHSKANTSCHRAUBE ISO	10539971	45	1	577	99 48 521 14	SPITZEN AL KPL
SECHSKANTSCHRAUBE ISO	406527814	45	4	284	11 24 409 0	VERKLEIDUNG OW EINBAU KP
SECHSKANTSCHRAUBE ISO	406527814	82	8	304	11 24 483 7	BEF-TEILE OW
SECHSKANTSCHRAUBE ISO	406527814	4	3	475	99 14 137 14	UMLENKROLLE KPL
SECHSKANTSCHRAUBE ISO	406512014	19	2	41	10 51 961 6	OELKUEHLER EINBAU
SECHSKANTSCHRAUBE ISO	406512014	54	31	284	11 24 409 0	VERKLEIDUNG OW EINBAU KP
SECHSKANTSCHRAUBE ISO	406512014	19	8	298	10 54 591 0	MOTORABDECKUNG
SECHSKANTSCHRAUBE ISO	406512014	83	1	304	11 24 483 7	BEF-TEILE OW
SECHSKANTSCHRAUBE ISO	406518614	24	5	282	11 24 409 0	VERKLEIDUNG OW EINBAU KP
SECHSKANTSCHRAUBE ISO	406518614	21	2	298	10 54 591 0	MOTORABDECKUNG
SECHSKANTSCHRAUBE ISO	406518614	47	8	637	99 10 116 14	SEILFUEHRUNG
SECHSKANTSCHRAUBE ISO	10538822	50	8	637	99 10 116 14	SEILFUEHRUNG
SECHSKANTSCHRAUBE ISO	10538822	14	2	705	11 26 771 6	MONTAGETEILE
SECHSKANTSCHRAUBE ISO	10539959	14	8	298	10 54 591 0	MOTORABDECKUNG
SECHSKANTSCHRAUBE ISO	10539959	41	34	621	10 55 372 1	DACHGELAENDER NRS
SECHSKANTSCHRAUBE ISO	10538823	62	4	264	11 24 114 2	ANSAUGANLAGE LUFT
SECHSKANTSCHRAUBE ISO	10538823	9	4	516	11 28 357 6	MONTAGETEILE
SECHSKANTSCHRAUBE ISO	406511214	88	6	276	11 24 114 5	ANLAGE HARNSTOFF EINBAU
SECHSKANTSCHRAUBE ISO	10539293	17	6	60	10 56 067 3	BATTERIE EINBAU KPL
SECHSKANTSCHRAUBE ISO	10539293	100	1	304	11 24 483 7	BEF-TEILE OW
SECHSKANTSCHRAUBE ISO	10539293	63	2	604	11 29 444 5	HEIZUNG NRS
SECHSKANTSCHRAUBE ISO	10539293	8	2	650	11 23 619 7	SELBSTVERLADESYSTEM NR

Bezeichnung	Artikel	Pos.	Menge	Blatt	Baugruppe	Bezeichnung
SECHSKANTSCHRAUBE ISO	406527914	3	1	50	10 55 268 1	MITNEHMER EINBAU
SECHSKANTSCHRAUBE ISO	406527914	68	4	254	11 24 114 0	KUEHLER EINBAU WASSER
SECHSKANTSCHRAUBE ISO	406527914	14	2	480	10 35 063 3	HALTERUNG
SECHSKANTSCHRAUBE ISO	406527914	38	16	621	10 55 372 1	DACHGELAENDER NRS
SECHSKANTSCHRAUBE ISO	406512114	14	2	479	99 29 588 14	AUFLAGE
SECHSKANTSCHRAUBE ISO 4	10538834	24	8	419	11 23 548 1	MITTELTEIL KPL
SECHSKANTSCHRAUBE ISO	406528014	5	2	385	10 53 756 0	LEUCHTENHALTER KPL
SECHSKANTSCHRAUBE ISO	406517714	21	2	58	10 58 163 4	KABINENAUFHAENGUNG KPL
SECHSKANTSCHRAUBE ISO	406517714	65	2	261	11 24 114 1	KUEHLER EINBAU LADELUFT
SECHSKANTSCHRAUBE ISO	406517714	23	12	309	99 29 803 14	VERZURRUNG BALLAST
SECHSKANTSCHRAUBE ISO	406517714	38	4	525	11 24 336 5	ANLENKSTUECK NADEL KPL
SECHSKANTSCHRAUBE ISO 4	4980977	46	4	127	10 12 224 5	RS HEBEL
SECHSKANTSCHRAUBE ISO	406517914	56	4	164	11 24 113 8	MOTORLAGER KPL
SECHSKANTSCHRAUBE ISO	406517914	24	7	408	10 55 876 0	RAUPENTRAEGER RE KPL
SECHSKANTSCHRAUBE ISO	406517914	24	7	417	10 55 876 1	RAUPENTRAEGER LI KPL
SECHSKANTSCHRAUBE ISO	406517914	14	8	473	11 24 444 4	A-BOCK 1 KPL
SECHSKANTSCHRAUBE ISO	406517914	28	8	521	99 23 398 14	ROLLENSATZ
SECHSKANTSCHRAUBE ISO	406517914	24	8	633	10 51 176 9	ZWISCHENHUB NADEL AL KP
SECHSKANTSCHRAUBE ISO 4	4066124	56	12	75	11 24 773 5	AGGREGAT HYDR
SECHSKANTSCHRAUBE ISO	406517314	62	12	44	10 56 070 1	TANK HYDR KPL
SECHSKANTSCHRAUBE ISO	406517314	73	3	304	11 24 483 7	BEF-TEILE OW
SECHSKANTSCHRAUBE ISO	406517314	2	8	329	99 29 258 14	EZW ROLLENPAKET
SECHSKANTSCHRAUBE ISO	406517314	15	2	388	99 18 041 14	VERZURRUNG OW
SECHSKANTSCHRAUBE ISO	406517314	18	152	408	10 55 876 0	RAUPENTRAEGER RE KPL
SECHSKANTSCHRAUBE ISO	406517314	18	152	417	10 55 876 1	RAUPENTRAEGER LI KPL
SECHSKANTSCHRAUBE ISO	406517314	22	16	419	11 23 548 1	MITTELTEIL KPL
SECHSKANTSCHRAUBE ISO	406517314	16	4	424	11 22 050 0	WINDEN EINBAU
SECHSKANTSCHRAUBE ISO	406517314	16	4	439	11 22 050 1	WINDEN EINBAU
SECHSKANTSCHRAUBE ISO	406517314	16	4	450	11 23 820 3	ANLENKSTUECK KPL
SECHSKANTSCHRAUBE ISO	406517314	30	4	525	11 24 336 5	ANLENKSTUECK NADEL KPL
SECHSKANTSCHRAUBE ISO	406517314	32	4	526	10 53 140 9	ANLENKSTUECK EL
SECHSKANTSCHRAUBE ISO	406517314	41	12	570	11 28 774 6	MONTAGETEILE
SECHSKANTSCHRAUBE ISO	406517314	15	2	577	99 48 521 14	SPITZEN AL KPL
SECHSKANTSCHRAUBE ISO	406517314	29	6	633	10 51 176 9	ZWISCHENHUB NADEL AL KP
SECHSKANTSCHRAUBE ISO 4	4066122	65	8	10	11 29 618 6	OW HYDR
SECHSKANTSCHRAUBE ISO 4	4066122	65	6	168	10 58 017 0	RUECKLAUFROHR
SECHSKANTSCHRAUBE ISO	406518414	89	1	276	11 24 114 5	ANLAGE HARNSTOFF EINBAU
SECHSKANTSCHRAUBE ISO	406518414	18	4	450	11 23 820 3	ANLENKSTUECK KPL
SECHSKANTSCHRAUBE ISO	406518414	11	2	574	10 55 753 7	SPITZENENDSCHALTER LI EIN
SECHSKANTSCHRAUBE ISO	406518414	11	2	575	10 55 757 6	SPITZENENDSCHALTER RE E
SECHSKANTSCHRAUBE ISO 4	4600366	61	36	10	11 29 618 6	OW HYDR
SECHSKANTSCHRAUBE ISO 4	4600366	613	8	312	10 51 969 8	NADELEINZIEHWINDE HYDR
SECHSKANTSCHRAUBE ISO 4	4600366	7	8	344	10 55 216 1	VERROHRUNG HYDR
SECHSKANTSCHRAUBE ISO	406511414	67	8	164	11 24 113 8	MOTORLAGER KPL
SECHSKANTSCHRAUBE ISO	406511414	60	6	165	10 51 948 1	ANSAUGROHR OEL
SECHSKANTSCHRAUBE ISO	406511414	22	3	320	10 51 968 6	EZW OW EINBAU KPL
SECHSKANTSCHRAUBE ISO	406511414	49	2	450	11 23 820 3	ANLENKSTUECK KPL
SECHSKANTSCHRAUBE ISO	406511414	47	2	582	99 38 329 14	SPITZEN AL KPL
SECHSKANTSCHRAUBE ISO 4	4600706	17	4	311	10 51 969 7	NADELEINZIEHWINDE
SECHSKANTSCHRAUBE ISO	406519214	62	4	268	11 24 114 3	ABGASANLAGE
SECHSKANTSCHRAUBE ISO	406512614	66	1	261	11 24 114 1	KUEHLER EINBAU LADELUFT
SECHSKANTSCHRAUBE ISO	406512614	22	4	582	99 38 329 14	SPITZEN AL KPL
SECHSKANTSCHRAUBE ISO 4	4902260	60	10	168	10 58 017 0	RUECKLAUFROHR
SECHSKANTSCHRAUBE ISO	406527614	35	4	58	10 58 163 4	KABINENAUFHAENGUNG KPL
SECHSKANTSCHRAUBE ISO	10538828	16	2	537	99 35 031 14	SEILSCHUTZ KPL
SECHSKANTSCHRAUBE ISO 4	406606414	56	16	10	11 29 618 6	OW HYDR
SECHSKANTSCHRAUBE ISO	10538830	74	8	304	11 24 483 7	BEF-TEILE OW
SECHSKANTSCHRAUBE ISO	10539311	6	6	321	10 51 968 7	HAUPT EZW HYDR
SECHSKANTSCHRAUBE ISO 4	10539297	17	4	529	11 29 649 2	BOLZEN KPL
SECHSKANTSCHRAUBE ISO 4	10539300	62	24	10	11 29 618 6	OW HYDR

Bezeichnung	Artikel	Pos.	Menge	Blatt	Baugruppe	Bezeichnung
SECHSKANTSCHRAUBE ISO 4	10539300	615	2	321	10 51 968 7	HAUPT EZW HYDR
SECHSKANTSCHRAUBE ISO 4	10539300	19	16	392	11 25 903 1	VERROHRUNG HYDR
SECHSKANTSCHRAUBE ISO 4	10539300	750	8	435	11 26 260 6	WINDE 1 HYDR
SECHSKANTSCHRAUBE ISO 4	10539300	750	16	441	11 26 261 1	WINDE 2 HYDR
SECHSKANTSCHRAUBE ISO 4	10539305	17	8	392	11 25 903 1	VERROHRUNG HYDR
SECHSKANTSCHRAUBE ISO 4	10539307	10	4	435	11 26 260 6	WINDE 1 HYDR
SECHSKANTSCHRAUBE ISO 4	10539307	10	4	441	11 26 261 1	WINDE 2 HYDR
SECHSKANTSCHRAUBE ISO	10543914	62	2	164	11 24 113 8	MOTORLAGER KPL
SECHSKANTSCHRAUBE ISO 4	10539315	62	4	169	11 24 113 9	MOTORVORMONTAGE
SECHSKANTSCHRAUBE ISO 4	10539315	29	2	320	10 51 968 6	EZW OW EINBAU KPL
SECHSKANTSCHRAUBE ISO 4	10539315	35	4	408	10 55 876 0	RAUPENTRAEGER RE KPL
SECHSKANTSCHRAUBE ISO 4	10539315	35	4	417	10 55 876 1	RAUPENTRAEGER LI KPL
SECHSKANTSCHRAUBE ISO 4	10539316	4	4	50	10 55 268 1	MITNEHMER EINBAU
SECHSKANTSCHRAUBE ISO 4	10539316	35	4	533	11 29 426 7	MONTAGETEILE
SECHSKANTSCHRAUBE ISO 4	10539316	43	2	541	11 29 938 4	MONTAGETEILE
SECHSKANTSCHRAUBE ISO 4	10539316	29	8	665	11 89 568 6	SELBSTVERLADESYSTEM NR
SECHSKANTSCHRAUBE ISO 4	10539317	60	6	47	10 56 073 2	KRAFTSTOFFTANK EINBAU
SECHSKANTSCHRAUBE ISO 4	10539317	59	8	164	11 24 113 8	MOTORLAGER KPL
SECHSKANTSCHRAUBE ISO 4	10539317	103	2	304	11 24 483 7	BEF-TEILE OW
SECHSKANTSCHRAUBE ISO 4	10539317	52	54	408	10 55 876 0	RAUPENTRAEGER RE KPL
SECHSKANTSCHRAUBE ISO 4	10539317	52	54	417	10 55 876 1	RAUPENTRAEGER LI KPL
SECHSKANTSCHRAUBE ISO 4	10539317	31	2	521	99 23 398 14	ROLLENSATZ
SECHSKANTSCHRAUBE ISO 4	10539317	14	5	527	11 29 648 5	BOLZEN KPL
SECHSKANTSCHRAUBE ISO 4	10539317	45	8	533	11 29 426 7	MONTAGETEILE
SECHSKANTSCHRAUBE ISO 4	10539317	35	8	541	11 29 938 4	MONTAGETEILE
SECHSKANTSCHRAUBE ISO 4	10539318	58	8	164	11 24 113 8	MOTORLAGER KPL
SECHSKANTSCHRAUBE ISO 4	10539318	17	28	419	11 23 548 1	MITTELTEIL KPL
SECHSKANTSCHRAUBE ISO 4	10539318	38	2	521	99 23 398 14	ROLLENSATZ
SECHSKANTSCHRAUBE ISO 4	10543902	60	12	164	11 24 113 8	MOTORLAGER KPL
SECHSKANTSCHRAUBE ISO 4	10543902	15	4	341	10 51 968 2	DW OW
SECHSKANTSCHRAUBE ISO 4	10543902	39	4	521	99 23 398 14	ROLLENSATZ
SECHSKANTSCHRAUBE ISO 4	10543903	62	3	42	10 56 070 0	TANK HYDR EINBAU
SECHSKANTSCHRAUBE ISO 4	10543903	13	4	320	10 51 968 6	EZW OW EINBAU KPL
SECHSKANTSCHRAUBE ISO 4	10543904	63	3	42	10 56 070 0	TANK HYDR EINBAU
SECHSKANTSCHRAUBE ISO 4	10543905	61	8	164	11 24 113 8	MOTORLAGER KPL
SECHSKANTSCHRAUBE ISO 4	10543905	28	12	320	10 51 968 6	EZW OW EINBAU KPL
SECHSKANTSCHRAUBE ISO 4	10543907	57	4	75	11 24 773 5	AGGREGAT HYDR
SECHSKANTSCHRAUBE ISO 4	10543910	27	8	408	10 55 876 0	RAUPENTRAEGER RE KPL
SECHSKANTSCHRAUBE ISO 4	10543910	27	8	417	10 55 876 1	RAUPENTRAEGER LI KPL
SECHSKANTSCHRAUBE ISO	10543932	4	4	408	10 55 876 0	RAUPENTRAEGER RE KPL
SECHSKANTSCHRAUBE ISO	10543932	4	4	417	10 55 876 1	RAUPENTRAEGER LI KPL
SECHSKANTSCHRAUBE ISO 4	10543917	4	1	433	10 57 462 9	BOLZEN KPL
SECHSKANTSCHRAUBE ISO 4	10543918	48	2	637	99 10 116 14	SEILFUEHRUNG
SECHSKANTSCHRAUBE ISO 4	10543919	63	2	264	11 24 114 2	ANSAUGANLAGE LUFT
SECHSKANTSCHRAUBE ISO 4	10543919	48	2	473	11 24 444 4	A-BOCK 1 KPL
SECHSKANTSCHRAUBE ISO 4	10543919	43	1	582	99 38 329 14	SPITZEN AL KPL
SECHSKANTSCHRAUBE ISO 4	10543919	51	2	637	99 10 116 14	SEILFUEHRUNG
SECHSKANTSCHRAUBE ISO 4	10543920	14	22	320	10 51 968 6	EZW OW EINBAU KPL
SECHSKANTSCHRAUBE ISO 4	10543920	44	4	408	10 55 876 0	RAUPENTRAEGER RE KPL
SECHSKANTSCHRAUBE ISO 4	10543920	87	2	412	96 93 178 01	FAHRANTRIEB
SECHSKANTSCHRAUBE ISO 4	10543920	41	4	417	10 55 876 1	RAUPENTRAEGER LI KPL
SECHSKANTSCHRAUBE ISO 4	10543921	18	4	419	11 23 548 1	MITTELTEIL KPL
SECHSKANTSCHRAUBE ISO 4	10543921	49	2	473	11 24 444 4	A-BOCK 1 KPL
SECHSKANTSCHRAUBE ISO 4	10543922	58	4	75	11 24 773 5	AGGREGAT HYDR
SECHSKANTSCHRAUBE ISO 4	10543922	25	4	606	10 51 743 9	SEILEINZIEHWINDE KPL NRS
SECHSKANTSCHRAUBE ISO 4	10543924	15	4	424	11 22 050 0	WINDEN EINBAU
SECHSKANTSCHRAUBE ISO 4	10543924	15	4	439	11 22 050 1	WINDEN EINBAU
SECHSKANTSCHRAUBE ISO 4	10543925	68	12	412	96 93 178 01	FAHRANTRIEB
SECHSKANTSCHRAUBE ISO 4	10545854	22	2	408	10 55 876 0	RAUPENTRAEGER RE KPL
SECHSKANTSCHRAUBE ISO 4	10545854	22	2	417	10 55 876 1	RAUPENTRAEGER LI KPL

Bezeichnung	Artikel	Pos.	Menge	Blatt	Baugruppe	Bezeichnung
SECHSKANTSCHRAUBE ISO 4	10545854	47	4	473	11 24 444 4	A-BOCK 1 KPL
SECHSKANTSCHRAUBE ISO 4	10543944	25	12	408	10 55 876 0	RAUPENTRAEGER RE KPL
SECHSKANTSCHRAUBE ISO 4	10543944	25	12	417	10 55 876 1	RAUPENTRAEGER LI KPL
SECHSKANTSCHRAUBE ISO 4	11250998	468	8	78	11 24 682 0	VERTEILERGETRIEBE
SECHSKANTSCHRAUBE ISO 4	485553914	16	3	706	10 52 293 0	DW GEBER NRS
SECHSKANTSCHRAUBE ISO 4	406501914	50	4	633	10 51 176 9	ZWISCHENHUB NADEL AL KP
SECHSKANTSCHRAUBE ISO 4	406501814	22	2	60	10 56 067 3	BATTERIE EINBAU KPL
SECHSKANTSCHRAUBE ISO 4	406501814	62	8	450	11 23 820 3	ANLENKSTUECK KPL
SECHSKANTSCHRAUBE ISO 4	10567564	30	3	665	11 89 568 6	SELBSTVERLADESYSTEM NR
SECHSKANTSCHRAUBE ISO 4	485557714	29	12	350	11 29 327 3	KABINE KPL
SECHSKANTSCHRAUBE ISO 4	485557714	5	2	599	11 22 322 6	MODEM KPL NRS
SECHSKANTSCHRAUBE ISO 4	406501714	79	5	276	11 24 114 5	ANLAGE HARNSTOFF EINBAU
SECHSKANTSCHRAUBE ISO 4	406501714	22	14	350	11 29 327 3	KABINE KPL
SECHSKANTSCHRAUBE ISO 4	406501714	4	8	385	10 53 756 0	LEUCHTENHALTER KPL
SECHSKANTSCHRAUBE ISO 4	406501714	18	3	686	10 58 064 7	VIDEOUEBERWACHUNGSANL
SECHSKANTSCHRAUBE ISO 4	406532614	68	1	304	11 24 483 7	BEF-TEILE OW
SECHSKANTSCHRAUBE ISO 4	406532614	13	3	424	11 22 050 0	WINDEN EINBAU
SECHSKANTSCHRAUBE ISO 4	406532614	13	3	439	11 22 050 1	WINDEN EINBAU
SECHSKANTSCHRAUBE ISO 4	406532614	60	24	450	11 23 820 3	ANLENKSTUECK KPL
SECHSKANTSCHRAUBE ISO 4	406532614	13	18	459	10 58 193 7	GITTERROST KPL
SECHSKANTSCHRAUBE ISO 4	406532614	30	8	473	11 24 444 4	A-BOCK 1 KPL
SECHSKANTSCHRAUBE ISO 4	406532614	68	4	525	11 24 336 5	ANLENKSTUECK NADEL KPL
SECHSKANTSCHRAUBE ISO 4	406532614	24	2	606	10 51 743 9	SEILEINZIEHWINDE KPL NRS
SECHSKANTSCHRAUBE ISO 4	406532614	17	3	680	11 22 344 2	KAMERA EINBAU
SECHSKANTSCHRAUBE ISO 4	406532614	21	3	686	10 58 064 7	VIDEOUEBERWACHUNGSANL
SECHSKANTSCHRAUBE ISO 4	406532614	4	4	706	10 52 293 0	DW GEBER NRS
SECHSKANTSCHRAUBE ISO 4	406518514	63	3	268	11 24 114 3	ABGASANLAGE
SECHSKANTSCHRAUBE ISO 4	406518514	80	10	276	11 24 114 5	ANLAGE HARNSTOFF EINBAU
SECHSKANTSCHRAUBE ISO 4	10538797	2	4	599	11 22 322 6	MODEM KPL NRS
SECHSKANTSCHRAUBE ISO 4	10538797	60	1	604	11 29 444 5	HEIZUNG NRS
SECHSKANTSCHRAUBE ISO 4	406551114	69	2	304	11 24 483 7	BEF-TEILE OW
SECHSKANTSCHRAUBE ISO 4	10538799	83	4	276	11 24 114 5	ANLAGE HARNSTOFF EINBAU
SECHSKANTSCHRAUBE ISO 4	10538799	9	4	550	99 31 679 14	ABSTUETZUNG KPL
SECHSKANTSCHRAUBE ISO 4	10526837	55	1	350	11 29 327 3	KABINE KPL
SECHSKANTSCHRAUBE ISO 4	10526837	13	16	419	11 23 548 1	MITTELTEIL KPL
SECHSKANTSCHRAUBE ISO 4	10538801	31	8	419	11 23 548 1	MITTELTEIL KPL
SECHSKANTSCHRAUBE ISO 4	10538806	33	2	637	99 10 116 14	SEILFUEHRUNG
SECHSKANTSCHRAUBE ISO	10538812	29	4	450	11 23 820 3	ANLENKSTUECK KPL
SECHSKANTSCHRAUBE ISO 4	406501614	10	4	513	11 28 610 5	ARRETIERUNG KPL
SECHSKANTSCHRAUBE ISO 4	406501514	11	2	56	92 65 477 14	FEUERLOESCHER NRS
SECHSKANTSCHRAUBE ISO 4	406501514	66	6	58	10 58 163 4	KABINENAUFHAENGUNG KPL
SECHSKANTSCHRAUBE ISO 4	406501514	59	6	254	11 24 114 0	KUEHLER EINBAU WASSER
SECHSKANTSCHRAUBE ISO 4	406501514	18	6	341	10 51 968 2	DW OW
SECHSKANTSCHRAUBE ISO 4	406501514	39	5	350	11 29 327 3	KABINE KPL
SECHSKANTSCHRAUBE ISO 4	406501514	3	2	386	11 30 962 5	HALTER KPL
SECHSKANTSCHRAUBE ISO 4	406501514	26	4	665	11 89 568 6	SELBSTVERLADESYSTEM NR
SECHSKANTSCHRAUBE ISO 4	406501514	6	1	687	10 57 848 6	MONITOR KABINE ANBAU
SECHSKANTSCHRAUBE ISO 4	406518814	54	4	164	11 24 113 8	MOTORLAGER KPL
SECHSKANTSCHRAUBE ISO 4	406518814	81	4	276	11 24 114 5	ANLAGE HARNSTOFF EINBAU
SECHSKANTSCHRAUBE ISO 4	406518814	94	8	304	11 24 483 7	BEF-TEILE OW
SECHSKANTSCHRAUBE ISO 4	406518814	23	4	470	11 27 536 5	RUECKFALLSTUETZEN EINBA
SECHSKANTSCHRAUBE ISO 4	406518814	20	6	686	10 58 064 7	VIDEOUEBERWACHUNGSANL
SECHSKANTSCHRAUBE ISO 4	406518814	14	3	706	10 52 293 0	DW GEBER NRS
SECHSKANTSCHRAUBE ISO 4	406501414	65	8	164	11 24 113 8	MOTORLAGER KPL
SECHSKANTSCHRAUBE ISO 4	406501414	60	4	261	11 24 114 1	KUEHLER EINBAU LADELUFT
SECHSKANTSCHRAUBE ISO 4	406501414	60	2	262	11 28 574 7	WP
SECHSKANTSCHRAUBE ISO 4	406501414	60	4	264	11 24 114 2	ANSAUGANLAGE LUFT
SECHSKANTSCHRAUBE ISO 4	406501414	35	11	282	11 24 409 0	VERKLEIDUNG OW EINBAU KP
SECHSKANTSCHRAUBE ISO 4	406501414	95	2	304	11 24 483 7	BEF-TEILE OW
SECHSKANTSCHRAUBE ISO 4	406501414	15	2	311	10 51 969 7	NADELEINZIEHWINDE

Bezeichnung	Artikel	Pos.	Menge	Blatt	Baugruppe	Bezeichnung
SECHSKANTSCHRAUBE ISO 4	406501414	26	19	350	11 29 327 3	KABINE KPL
SECHSKANTSCHRAUBE ISO 4	406501414	11	6	419	11 23 548 1	MITTELTEIL KPL
SECHSKANTSCHRAUBE ISO 4	406501414	69	11	450	11 23 820 3	ANLENKSTUECK KPL
SECHSKANTSCHRAUBE ISO 4	406501414	25	1	485	11 28 390 8	AL BEGEHUNG
SECHSKANTSCHRAUBE ISO 4	406501414	25	1	499	11 28 583 8	AL BEGEHUNG
SECHSKANTSCHRAUBE ISO 4	406501414	25	1	505	11 28 626 1	AL BEGEHUNG
SECHSKANTSCHRAUBE ISO 4	406501414	32	5	525	11 24 336 5	ANLENKSTUECK NADEL KPL
SECHSKANTSCHRAUBE ISO 4	406501414	22	4	606	10 51 743 9	SEILEINZIEHWINDE KPL NRS
SECHSKANTSCHRAUBE ISO 4	406501414	45	40	621	10 55 372 1	DACHGELAENDER NRS
SECHSKANTSCHRAUBE ISO 4	406501414	33	2	686	10 58 064 7	VIDEOUEBERWACHUNGSANL
SECHSKANTSCHRAUBE ISO	4062002	64	16	10	11 29 618 6	OW HYDR
SECHSKANTSCHRAUBE ISO 4	406501314	12	2	53	11 26 557 2	MONTAGETEILE
SECHSKANTSCHRAUBE ISO 4	406501314	28	2	58	10 58 163 4	KABINENAUFHAENGUNG KPL
SECHSKANTSCHRAUBE ISO 4	406501314	66	2	164	11 24 113 8	MOTORLAGER KPL
SECHSKANTSCHRAUBE ISO 4	406501314	63	8	254	11 24 114 0	KUEHLER EINBAU WASSER
SECHSKANTSCHRAUBE ISO 4	406501314	61	6	261	11 24 114 1	KUEHLER EINBAU LADELUFT
SECHSKANTSCHRAUBE ISO 4	406501314	82	4	276	11 24 114 5	ANLAGE HARNSTOFF EINBAU
SECHSKANTSCHRAUBE ISO 4	406501314	96	10	304	11 24 483 7	BEF-TEILE OW
SECHSKANTSCHRAUBE ISO 4	406501314	20	4	422	99 26 718 14	PODEST
SECHSKANTSCHRAUBE ISO 4	406501314	21	10	450	11 23 820 3	ANLENKSTUECK KPL
SECHSKANTSCHRAUBE ISO 4	406501314	12	3	526	10 53 140 9	ANLENKSTUECK EL
SECHSKANTSCHRAUBE ISO 4	406501314	11	2	530	11 29 451 7	SEILSCHUTZ KPL
SECHSKANTSCHRAUBE ISO 4	406501314	11	2	536	11 29 488 4	SEILSCHUTZ KPL
SECHSKANTSCHRAUBE ISO 4	406501314	39	3	570	11 28 774 6	MONTAGETEILE
SECHSKANTSCHRAUBE ISO 4	406501314	11	2	572	11 29 457 3	SEILSCHUTZ KPL
SECHSKANTSCHRAUBE ISO 4	406501314	11	2	573	11 29 462 6	SEILSCHUTZ KPL
SECHSKANTSCHRAUBE ISO 4	406501314	34	4	577	99 48 521 14	SPITZEN AL KPL
SECHSKANTSCHRAUBE ISO 4	406501314	62	7	604	11 29 444 5	HEIZUNG NRS
SECHSKANTSCHRAUBE ISO 4	406501314	21	6	606	10 51 743 9	SEILEINZIEHWINDE KPL NRS
SECHSKANTSCHRAUBE ISO 4	406501314	32	2	637	99 10 116 14	SEILFUEHRUNG
SECHSKANTSCHRAUBE ISO 4	406501314	5	4	691	99 21 973 14	FAHRERSITZ NRS
SECHSKANTSCHRAUBE ISO 4	406517614	62	4	261	11 24 114 1	KUEHLER EINBAU LADELUFT
SECHSKANTSCHRAUBE ISO 4	406517614	97	2	304	11 24 483 7	BEF-TEILE OW
SECHSKANTSCHRAUBE ISO 4	406517614	13	2	495	11 23 292 2	AUFLAGE KPL
SECHSKANTSCHRAUBE ISO 4	406517614	13	2	710	10 52 155 4	BETANKUNGSANLAGE NRS
SECHSKANTSCHRAUBE ISO 4	406532914	98	1	304	11 24 483 7	BEF-TEILE OW
SECHSKANTSCHRAUBE ISO 4	406532914	18	2	459	10 58 193 7	GITTERROST KPL
SECHSKANTSCHRAUBE ISO 4	406532914	27	4	512	11 28 629 9	MONTAGETEILE
SECHSKANTSCHRAUBE ISO 4	406508014	61	3	450	11 23 820 3	ANLENKSTUECK KPL
SECHSKANTSCHRAUBE ISO 4	406508014	56	4	525	11 24 336 5	ANLENKSTUECK NADEL KPL
SECHSKANTSCHRAUBE ISO 4	406508014	46	2	621	10 55 372 1	DACHGELAENDER NRS
SECHSKANTSCHRAUBE ISO 4	10538807	36	5	282	11 24 409 0	VERKLEIDUNG OW EINBAU KP
SECHSKANTSCHRAUBE ISO 4	10538807	13	16	422	99 26 718 14	PODEST
SECHSKANTSCHRAUBE ISO 4	10538807	54	17	450	11 23 820 3	ANLENKSTUECK KPL
SECHSKANTSCHRAUBE ISO 4	10538807	24	3	485	11 28 390 8	AL BEGEHUNG
SECHSKANTSCHRAUBE ISO 4	10538807	24	3	499	11 28 583 8	AL BEGEHUNG
SECHSKANTSCHRAUBE ISO 4	10538807	24	3	505	11 28 626 1	AL BEGEHUNG
SECHSKANTSCHRAUBE ISO 4	10538807	11	2	525	11 24 336 5	ANLENKSTUECK NADEL KPL
SECHSKANTSCHRAUBE ISO 4	10538807	15	4	554	11 28 979 0	GITTERROSTTRAEGER
SECHSKANTSCHRAUBE ISO 4	10538807	11	12	623	11 24 147 8	UW PODEST
SECHSKANTSCHRAUBE ISO 4	10538807	11	16	624	11 24 575 5	PODEST
SECHSKANTSCHRAUBE ISO 4	10331506	39	6	282	11 24 409 0	VERKLEIDUNG OW EINBAU KP
SECHSKANTSCHRAUBE ISO 4	10331506	20	19	450	11 23 820 3	ANLENKSTUECK KPL
SECHSKANTSCHRAUBE ISO 4	10331506	13	8	461	99 34 198 14	SCHILD LIEBHERR
SECHSKANTSCHRAUBE ISO 4	10538808	34	2	541	11 29 938 4	MONTAGETEILE
SECHSKANTSCHRAUBE ISO 4	10538808	49	2	577	99 48 521 14	SPITZEN AL KPL
SECHSKANTSCHRAUBE ISO 4	10538808	14	2	633	10 51 176 9	ZWISCHENHUB NADEL AL KP
SECHSKANTSCHRAUBE ISO 4	10331507	11	6	298	10 54 591 0	MOTORABDECKUNG
SECHSKANTSCHRAUBE ISO 4	10331507	10	2	335	99 29 386 14	KONSOLE KPL
SECHSKANTSCHRAUBE ISO 4	10331507	10	2	336	99 29 434 14	KONSOLE KPL

Bezeichnung	Artikel	Pos.	Menge	Blatt	Baugruppe	Bezeichnung
SECHSKANTSCHRAUBE ISO 4	10331507	13	2	486	11 28 391 3	BEFESTIGUNGSCHELLE
SECHSKANTSCHRAUBE ISO 4	10331507	17	2	522	99 30 800 14	SPITZENENDSCHALTER EINBA
SECHSKANTSCHRAUBE ISO 4	10331507	13	2	555	11 28 667 9	BEFESTIGUNGSCHELLE
SECHSKANTSCHRAUBE ISO 4	10331507	13	2	574	10 55 753 7	SPITZENENDSCHALTER LI EIN
SECHSKANTSCHRAUBE ISO 4	10331507	13	2	575	10 55 757 6	SPITZENENDSCHALTER RE E
SECHSKANTSCHRAUBE ISO 4	10541592	22	4	650	11 23 619 7	SELBSTVERLADESYSTEM NR
SECHSKANTSCHRAUBE ISO 4	10538809	50	2	164	11 24 113 8	MOTORLAGER KPL
SECHSKANTSCHRAUBE ISO 4	10538809	64	2	254	11 24 114 0	KUEHLER EINBAU WASSER
SECHSKANTSCHRAUBE ISO 4	10538809	60	2	270	11 24 114 4	KRAFTSTOFFANLAGE
SECHSKANTSCHRAUBE ISO 4	10538809	13	2	484	11 28 725 5	SEILSCHUTZ KPL
SECHSKANTSCHRAUBE ISO 4	10541593	85	6	276	11 24 114 5	ANLAGE HARNSTOFF EINBAU
SECHSKANTSCHRAUBE ISO 4	10541593	42	4	577	99 48 521 14	SPITZEN AL KPL
SECHSKANTSCHRAUBE ISO 4	10538810	37	2	450	11 23 820 3	ANLENKSTUECK KPL
SECHSKANTSCHRAUBE ISO	406154014	30	45	408	10 55 876 0	RAUPENTRAEGER RE KPL
SECHSKANTSCHRAUBE ISO	406154014	30	45	417	10 55 876 1	RAUPENTRAEGER LI KPL
SECHSRUNDSCHRAUBE	10138772	5	24	234	10 14 144 4	ABGASROHR ANBAU
SECHSRUNDSCHRAUBE M16	10118912	4	10	246	10 11 892 9	SCHWUNGRAD ANBAU
SECHSRUNDSCHRAUBE M16	10125439	3	6	191	10 13 176 8	ZYL KOPF ANBAU
SECHSRUNDSCHRAUBE M8X	10127323	9	12	237	10 14 511 2	ABGASSTUTZEN ANBAU
SEIL	774730714	12	40	317	99 23 387 14	BESEILUNG EZW NADEL AL
SEIL	774762314	11	1	606	10 51 743 9	SEILEINZIEHWINDE KPL NRS
SEIL LI	11227045	10	1	340	11 22 703 7	BESEILUNG EZW HAUPT AL
SEIL LI	790517014	122	1	3	01 38 281 14	LR 1300 SX
SEIL LI	790517114	121	1	3	01 38 281 14	LR 1300 SX
SEIL RE	10227828	10	1	317	99 23 387 14	BESEILUNG EZW NADEL AL
SEILEINZIEHWINDE KPL NRS	10517439	550	1	3	01 38 281 14	LR 1300 SX
SEILEINZUGSWINDE HYDR NR	10542516	2	1	606	10 51 743 9	SEILEINZIEHWINDE KPL NRS
SEILFESTPUNKT	11210606	5	1	593	79 04 871 14	UNTERFLASCHE
SEILFESTPUNKT	11481158	5	1	586	79 04 112 14	UNTERFLASCHE
SEILFUEHRUNG	991011614	605	1	3	01 38 281 14	LR 1300 SX
SEILFUEHRUNG SCHWK	991011714	10	1	637	99 10 116 14	SEILFUEHRUNG
SEILHALTERUNG NRS	11236266	680	2	4	01 38 281 14	LR 1300 SX
SEILKLEMME	540271714	5	1	614	54 02 702 14	SEILTROMMEL KPL
SEILROLLE	10504352	1	1	586	79 04 112 14	UNTERFLASCHE
SEILROLLE	10504352	1	3	593	79 04 871 14	UNTERFLASCHE
SEILROLLE	947037314	1	1	638	91 49 419 14	SEILROLLE KPL
SEILROLLE	967217003	1	1	611	96 72 161 03	SEILROLLE KPL
SEILROLLE KPL	790202014	10	10	521	99 23 398 14	ROLLENSATZ
SEILROLLE KPL	790202014	6	5	570	11 28 774 6	MONTAGETEILE
SEILROLLE KPL	790202014	22	1	577	99 48 521 14	SPITZEN AL KPL
SEILROLLE KPL	790202014	1	1	580	91 89 071 14	SPITZEN AL UMBAU
SEILROLLE KPL	790202014	12	1	582	99 38 329 14	SPITZEN AL KPL
SEILROLLE KPL	790202014	12	1	631	91 92 763 14	HAKENBETRIEB 2 NRS
SEILROLLE KPL	914690714	4	12	329	99 29 258 14	EZW ROLLENPAKET
SEILROLLE KPL	914690714	13	13	473	11 24 444 4	A-BOCK 1 KPL
SEILROLLE KPL	914941914	13	4	637	99 10 116 14	SEILFUEHRUNG
SEILROLLE KPL	915523714	12	1	521	99 23 398 14	ROLLENSATZ
SEILROLLE KPL	915523714	5	9	533	11 29 426 7	MONTAGETEILE
SEILROLLE KPL	915523714	11	7	541	11 29 938 4	MONTAGETEILE
SEILROLLE KPL	915523714	12	1	637	99 10 116 14	SEILFUEHRUNG
SEILROLLE KPL	919279914	11	3	521	99 23 398 14	ROLLENSATZ
SEILROLLE KPL	919279914	4	1	533	11 29 426 7	MONTAGETEILE
SEILROLLE KPL	919279914	12	1	541	11 29 938 4	MONTAGETEILE
SEILROLLE KPL	919279914	10	2	631	91 92 763 14	HAKENBETRIEB 2 NRS
SEILROLLE KPL	919279914	32	2	633	10 51 176 9	ZWISCHENHUB NADEL AL KP
SEILROLLE KPL	967216103	14	2	606	10 51 743 9	SEILEINZIEHWINDE KPL NRS
SEILSCHEIBE	11271491	1	1	587	10 50 435 2	SEILROLLE
SEILSCHUTZ	10349201	10	1	533	11 29 426 7	MONTAGETEILE
SEILSCHUTZ	10349201	17	2	541	11 29 938 4	MONTAGETEILE
SEILSCHUTZ	10349202	11	1	533	11 29 426 7	MONTAGETEILE

Bezeichnung	Artikel	Pos.	Menge	Blatt	Baugruppe	Bezeichnung
SEILSCHUTZ	11271479	6	1	593	79 04 871 14	UNTERFLASCHE
SEILSCHUTZ	11481159	6	1	586	79 04 112 14	UNTERFLASCHE
SEILSCHUTZ EZW KPL	992925914	12	1	320	10 51 968 6	EZW OW EINBAU KPL
SEILSCHUTZ EZW KPL	993353714	1	1	330	99 29 259 14	SEILSCHUTZ EZW KPL
SEILSCHUTZ KPL	11287255	12	1	482	11 24 570 3	AL ZWISCHENSTUECK KPL
SEILSCHUTZ KPL	11287255	12	2	498	11 24 570 9	AL ZWISCHENSTUECK KPL
SEILSCHUTZ KPL	11287255	12	4	504	11 24 571 5	AL ZWISCHENSTUECK KPL
SEILSCHUTZ KPL	11287255	12	1	552	11 24 084 8	AL ZWISCHENSTUECK KPL
SEILSCHUTZ KPL	11287255	12	2	559	11 24 162 5	AL ZWISCHENSTUECK KPL
SEILSCHUTZ KPL	11287255	12	4	562	11 24 163 0	AL ZWISCHENSTUECK KPL
SEILSCHUTZ KPL	11294517	41	5	525	11 24 336 5	ANLENKSTUECK NADEL KPL
SEILSCHUTZ KPL	11294517	16	1	564	11 24 263 6	NADELKOPF KPL
SEILSCHUTZ KPL	11294573	17	2	564	11 24 263 6	NADELKOPF KPL
SEILSCHUTZ KPL	11294626	18	1	564	11 24 263 6	NADELKOPF KPL
SEILSCHUTZ KPL	11294884	14	2	531	11 24 475 9	A-BOCK 2 KPL
SEILSCHUTZ KPL	993503114	15	1	531	11 24 475 9	A-BOCK 2 KPL
SEILSCHUTZ SCHWK	993522914	20	1	521	99 23 398 14	ROLLENSATZ
SEILSCHUTZROHR	950562414	11	1	537	99 35 031 14	SEILSCHUTZ KPL
SEILSCHUTZROHR	951577814	12	1	533	11 29 426 7	MONTAGETEILE
SEILSCHUTZROHR	956809314	36	2	521	99 23 398 14	ROLLENSATZ
SEILSCHUTZROHR	956809514	21	1	521	99 23 398 14	ROLLENSATZ
SEILSCHUTZROHR	959841814	25	2	473	11 24 444 4	A-BOCK 1 KPL
SEILSCHUTZSTANGE	10814912	12	2	586	79 04 112 14	UNTERFLASCHE
SEILSCHUTZSTANGE	11271482	12	2	593	79 04 871 14	UNTERFLASCHE
SEILTROMMEL	10555972	900	1	326	10 55 597 3	SEILTROMMEL
SEILTROMMEL	10555973	2	1	324	10 55 156 3	WINDE
SEILTROMMEL	11231269	2	1	425	10 53 039 8	WINDE
SEILTROMMEL	540273314	1	1	614	54 02 702 14	SEILTROMMEL KPL
SEILTROMMEL KPL	540270214	21	1	612	59 20 694 14	WINDE
SEILZUG	592286314	26	1	370	10 50 133 3	SCHIEBETUER
SEITENBLECH	11271456	2	2	593	79 04 871 14	UNTERFLASCHE
SEITENBLECH	11274624	2	2	586	79 04 112 14	UNTERFLASCHE
SEITENSCHEIBE LI	592288514	43	1	366	10 35 250 8	KABINE
SEITENSCHEIBE RE	592289114	49	1	366	10 35 250 8	KABINE
SEITENSCHEIBE RE	592289214	50	1	366	10 35 250 8	KABINE
SEITENTEIL	992938914	1	1	331	99 33 537 14	SEILSCHUTZ EZW KPL
SEITENTEIL	992939214	2	1	331	99 33 537 14	SEILSCHUTZ EZW KPL
SELBSTVERLADESYSTEM H	10519712	2	1	644	10 51 971 3	SELBSTVERLADESYSTEM NR
SELBSTVERLADESYSTEM H	10519738	2	1	650	11 23 619 7	SELBSTVERLADESYSTEM NR
SELBSTVERLADESYSTEM NR	10519713	642	1	4	01 38 281 14	LR 1300 SX
SELBSTVERLADESYSTEM NR	11236197	644	1	4	01 38 281 14	LR 1300 SX
SELBSTVERLADESYSTEM NR	11242988	647	1	4	01 38 281 14	LR 1300 SX
SELBSTVERLADESYSTEM NR	11895685	10	1	659	11 24 298 8	SELBSTVERLADESYSTEM NR
SELBSTVERLADESYSTEM NR	11895686	10	1	660	11 89 568 5	SELBSTVERLADESYSTEM NR
SELBSTVERLADESYSTEM NR	11895687	11	1	659	11 24 298 8	SELBSTVERLADESYSTEM NR
SELBSTVERLADESYSTEM NR	11895688	10	1	666	11 89 568 7	SELBSTVERLADESYSTEM NR
SENKBREMSVENTIL	10226750	2	2	645	10 51 971 2	SELBSTVERLADESYSTEM H
SENKBREMSVENTIL	11239880	2	1	655	51 16 404 14	SENKBREMSVENTIL
SENKBREMSVENTIL	11239880	2	1	657	59 21 584 14	SENKBREMSVENTIL
SENKBREMSVENTIL	11300790	160	1	669	59 21 826 14	ABSTUETZZYL
SENKBREMSVENTIL	511640414	3	1	652	10 51 973 8	SELBSTVERLADESYSTEM H
SENKBREMSVENTIL	592158414	4	1	652	10 51 973 8	SELBSTVERLADESYSTEM H
SENKSCHRAUBE BN 4851 M8	10342191	4	3	188	10 12 134 5	RS KURBELWELLENDICHTUN
SENKSCHRAUBE DIN 7991 M1	4001967	24	2	350	11 29 327 3	KABINE KPL
SENKSCHRAUBE DIN 7991 M1	4001967	28	24	665	11 89 568 6	SELBSTVERLADESYSTEM NR
SENKSCHRAUBE DIN 7991 M1	4600170	7	8	333	99 29 392 14	SEITENTEIL
SENKSCHRAUBE DIN 7991 M1	4600170	20	12	335	99 29 386 14	KONSOLE KPL
SENKSCHRAUBE DIN 7991 M1	4600170	20	12	336	99 29 434 14	KONSOLE KPL
SENKSCHRAUBE DIN 7991 M	407071114	4	4	386	11 30 962 5	HALTER KPL
SENKSCHRAUBE DIN 7991 M6	408606314	33	24	619	10 55 372 1	DACHGELAENDER NRS

Bezeichnung	Artikel	Pos.	Menge	Blatt	Baugruppe	Bezeichnung
SENKSCHRAUBE DIN 7991 M8	4600257	4	7	334	99 29 388 14	BUEGEL KPL
SENKSCHRAUBE DIN 7991 M8	4001205	3	7	334	99 29 388 14	BUEGEL KPL
SENKSCHRAUBE DIN 7991 M	4600157	11	16	335	99 29 386 14	KONSOLE KPL
SENKSCHRAUBE DIN 7991 M	4600157	11	16	336	99 29 434 14	KONSOLE KPL
SENKSCHRAUBE DIN 7991 M8	408606214	37	4	350	11 29 327 3	KABINE KPL
SENKSCHRAUBE DIN 7991 M8	408606214	5	2	687	10 57 848 6	MONITOR KABINE ANBAU
SENKSCHRAUBE DIN 7991 M8	4002551	6	4	332	99 29 389 14	SEITENTEIL
SENKSCHRAUBE DIN 7991 M8	4002551	6	4	333	99 29 392 14	SEITENTEIL
SENKSCHRAUBE DIN 7991 M8	4002551	101	4	604	11 29 444 5	HEIZUNG NRS
SENKSCHRAUBE DIN 7991 M8	408606414	90	14	304	11 24 483 7	BEF-TEILE OW
SENKSCHRAUBE DIN 7991 M	408601008	16	4	459	10 58 193 7	GITTERROST KPL
SENKSCHRAUBE DIN 7991 M	408601008	13	8	624	11 24 575 5	PODEST
SENKSCHRAUBE DIN 7991 M	408601014	42	6	284	11 24 409 0	VERKLEIDUNG OW EINBAU KP
SENKSCHRAUBE ISO 10642	408602614	42	2	533	11 29 426 7	MONTAGETEILE
SENKSCHRAUBE ISO 10642	408600708	99	2	304	11 24 483 7	BEF-TEILE OW
SENKSCHRAUBE ISO 10642	408600708	6	8	365	11 22 369 1	FUSSPEDAL EL EINBAU
SENKSCHRAUBE ISO 10642	408600708	6	1	698	11 22 037 2	FUSSPEDAL EL EINBAU
SENKSCHRAUBE ISO 10642	10349756	93	6	304	11 24 483 7	BEF-TEILE OW
SENKSCHRAUBE ISO 10642	408600808	91	2	304	11 24 483 7	BEF-TEILE OW
SENKSCHRAUBE ISO 10642	4002655	92	10	304	11 24 483 7	BEF-TEILE OW
SENKSCHRAUBE ISO 2009 M4	407041214	3	3	384	97 07 857 03	LIBELLE EINBAU
SENKSCHRAUBE ISO 2009 M	4001266	42	2	715	10 52 155 9	MODUL BETANKUNGSANLAG
SENKSCHRAUBE ISO 7047 M4	4002871	34	24	350	11 29 327 3	KABINE KPL
SENKSCHRAUBE ISO 7047 M6	4002401	5	4	383	11 26 095 6	STEUERKONSOLE RE KPL
SENSOR	10144038	7	1	275	11 24 114 5	ANLAGE HARNSTOFF EINBAU
SENSOR	11008787	9	2	275	11 24 114 5	ANLAGE HARNSTOFF EINBAU
SICHERHEITSELEMENT	11291030	3	1	266	11 24 679 0	LUFTFILTER
SICHERHEITSHEBEL KPL	693168514	41	1	356	10 51 907 9	STEUERSTAND LI
SICHERHEITSKLAPPSTECKER	10098106	12	2	388	99 18 041 14	VERZURRUNG OW
SICHERHEITSKLAPPSTECKER	10098106	25	4	570	11 28 774 6	MONTAGETEILE
SICHERHEITSKLAPPSTECKER	10098106	45	2	637	99 10 116 14	SEILFUEHRUNG
SICHERHEITSKLAPPSTECKER	485544014	17	1	582	99 38 329 14	SPITZEN AL KPL
SICHERHEITSKLAPPSTECKER	485544014	28	1	633	10 51 176 9	ZWISCHENHUB NADEL AL KP
SICHERHEITSKLAPPSTECKER	485565814	2	2	59	99 08 706 14	LEITER EINBAU
SICHERHEITSKLAPPSTECKER	485565814	12	1	487	11 28 397 7	AUFFANGWANNE KPL
SICHERHEITSKLAPPSTECKER	485565814	12	1	488	11 28 397 8	AUFFANGWANNE KPL
SICHERHEITSKLAPPSTECKER	485565814	24	2	515	10 59 863 3	PENDEL KPL
SICHERHEITSKLAPPSTECKER	485565814	43	2	637	99 10 116 14	SEILFUEHRUNG
SICHERHEITSKLAPPSTECKER	485565814	5	1	640	99 10 125 14	GABEL
SICHERHEITSKLAPPSTECKER	485565814	5	1	642	99 06 789 14	GABEL
SICHERHEITSKLAPPSTECKER	432016214	40	1	58	10 58 163 4	KABINENAUFHAENGUNG KPL
SICHERHEITSKLAPPSTECKER	432016214	26	1	570	11 28 774 6	MONTAGETEILE
SICHERHEITSKLAPPSTECKER	432016214	34	2	582	99 38 329 14	SPITZEN AL KPL
SICHERUNGSBLECH	959912714	17	6	309	99 29 803 14	VERZURRUNG BALLAST
SICHERUNGSEINSATZ	10224306	1	1	31	10 53 048 9	SICHERUNGSHALTER
SICHERUNGSEINSATZ	10224306	21	2	355	99 20 811 14	RESERVESICHERUNGEN
SICHERUNGSEINSATZ	10224307	11	3	31	10 53 048 9	SICHERUNGSHALTER
SICHERUNGSEINSATZ	10224307	22	2	355	99 20 811 14	RESERVESICHERUNGEN
SICHERUNGSEINSATZ	604105314	68	5	354	10 55 963 5	SCHALTSCHR X1
SICHERUNGSEINSATZ	604105314	5	5	355	99 20 811 14	RESERVESICHERUNGEN
SICHERUNGSEINSATZ	604105414	7	5	355	99 20 811 14	RESERVESICHERUNGEN
SICHERUNGSEINSATZ	604105514	69	41	354	10 55 963 5	SCHALTSCHR X1
SICHERUNGSEINSATZ	604105514	10	10	355	99 20 811 14	RESERVESICHERUNGEN
SICHERUNGSEINSATZ	604105614	70	6	354	10 55 963 5	SCHALTSCHR X1
SICHERUNGSEINSATZ	604105614	15	5	355	99 20 811 14	RESERVESICHERUNGEN
SICHERUNGSFALLE	10350196	2	1	591	11 48 116 2	EINFACHHAKEN
SICHERUNGSFALLE	10599212	2	2	597	11 27 148 9	DOPPELHAKEN
SICHERUNGSFEDER 3MM	11297461	3	1	677	11 23 623 3	TASCHENSCHLOSS
SICHERUNGSFEDER 4.5 MM	433105414	12	4	308	10 52 656 0	MONTAGETEILE
SICHERUNGSFEDER 4.5 MM	433105414	27	2	582	99 38 329 14	SPITZEN AL KPL

Bezeichnung	Artikel	Pos.	Menge	Blatt	Baugruppe	Bezeichnung
SICHERUNGSFEDER 4.5 MM	433105414	12	2	606	10 51 743 9	SEILEINZIEHWINDE KPL NRS
SICHERUNGSFEDER 4.5 MM	433105414	11	1	626	11 21 546 2	HELILAMPE EINBAU NRS
SICHERUNGSFEDER 4MM	433101208	12	1	494	11 23 290 7	AUFLAGE KPL
SICHERUNGSFEDER 4MM	433101208	53	2	512	11 28 629 9	MONTAGETEILE
SICHERUNGSFEDER 4MM	433101208	34	8	521	99 23 398 14	ROLLENSATZ
SICHERUNGSFEDER 4MM	433101208	36	4	533	11 29 426 7	MONTAGETEILE
SICHERUNGSFEDER 4MM	433101208	41	6	541	11 29 938 4	MONTAGETEILE
SICHERUNGSFEDER 4MM	433101208	41	2	577	99 48 521 14	SPITZEN AL KPL
SICHERUNGSFEDER 4MM	433101208	23	8	633	10 51 176 9	ZWISCHENHUB NADEL AL KP
SICHERUNGSFEDER 4MM	433101208	6	12	639	99 23 405 14	ZWISCHENABSPANNUNG NR
SICHERUNGSFEDER 4MM	433101208	6	12	641	99 23 420 14	ZWISCHENABSPANNUNG NR
SICHERUNGSFEDER 4MM	433101208	7	14	643	97 05 997 03	ZWISCHENABSPANNUNG NR
SICHERUNGSFEDER 4MM	433101208	30	4	671	11 89 568 8	SELBSTVERLADESYSTEM NR
SICHERUNGSFEDER 5MM	433102508	56	2	450	11 23 820 3	ANLENKSTUECK KPL
SICHERUNGSFEDER 5MM	433102508	18	2	491	11 28 794 6	TRANSPORTSICHERUNG
SICHERUNGSFEDER 5MM	433102508	37	3	533	11 29 426 7	MONTAGETEILE
SICHERUNGSFEDER 5MM	433102508	13	1	537	99 35 031 14	SEILSCHUTZ KPL
SICHERUNGSFEDER 5MM	433102508	42	2	541	11 29 938 4	MONTAGETEILE
SICHERUNGSFEDER 5MM	433102508	19	2	544	10 53 145 5	RUECKFALLSTUETZE NADEL
SICHERUNGSFEDER 5MM	433102508	18	2	557	11 28 982 7	TRANSPORTSICHERUNG
SICHERUNGSFEDER 5MM	433102508	24	1	570	11 28 774 6	MONTAGETEILE
SICHERUNGSFEDER 5MM	433102508	20	2	577	99 48 521 14	SPITZEN AL KPL
SICHERUNGSFEDER 5MM	433102508	29	8	644	10 51 971 3	SELBSTVERLADESYSTEM NR
SICHERUNGSFEDER DIN 2194	433105008	19	6	309	99 29 803 14	VERZURRUNG BALLAST
SICHERUNGSFEDER DIN 2194	433105008	13	8	450	11 23 820 3	ANLENKSTUECK KPL
SICHERUNGSFEDER DIN 2194	433105008	15	2	460	99 30 060 14	HALTESTANGE KPL
SICHERUNGSFEDER DIN 2194	433105008	12	2	483	11 28 726 4	BOLZEN KPL
SICHERUNGSFEDER DIN 2194	433105008	15	2	492	99 24 404 14	HALTESTANGE KPL
SICHERUNGSFEDER DIN 2194	433105008	6	2	493	91 85 910 14	HALTESTANGE KPL
SICHERUNGSFEDER DIN 2194	433105008	15	2	500	99 24 405 14	HALTESTANGE KPL
SICHERUNGSFEDER DIN 2194	433105008	6	2	501	91 85 911 14	HALTESTANGE KPL
SICHERUNGSFEDER DIN 2194	433105008	15	2	506	99 24 406 14	HALTESTANGE KPL
SICHERUNGSFEDER DIN 2194	433105008	6	2	507	99 03 609 14	HALTESTANGE KPL
SICHERUNGSFEDER DIN 2194	433105008	54	2	512	11 28 629 9	MONTAGETEILE
SICHERUNGSFEDER DIN 2194	433105008	15	2	519	99 24 594 14	HALTESTANGE KPL
SICHERUNGSFEDER DIN 2194	433105008	20	2	525	11 24 336 5	ANLENKSTUECK NADEL KPL
SICHERUNGSFEDER DIN 2194	433105008	12	2	528	11 28 852 3	BOLZEN KPL
SICHERUNGSFEDER DIN 2194	433105008	25	2	535	99 26 359 14	HALTESTANGE KPL
SICHERUNGSFEDER DIN 2194	433105008	15	2	571	99 26 362 14	HALTESTANGE KPL
SICHERUNGSFEDER DIN 2194	433105008	21	3	577	99 48 521 14	SPITZEN AL KPL
SICHERUNGSFEDER DIN 2194	433105008	25	8	633	10 51 176 9	ZWISCHENHUB NADEL AL KP
SICHERUNGSFEDER DIN 2194	433105008	44	2	637	99 10 116 14	SEILFUEHRUNG
SICHERUNGSFEDER DIN 2194	433105008	11	1	650	11 23 619 7	SELBSTVERLADESYSTEM NR
SICHERUNGSHALTER	10530489	34	1	28	11 24 519 0	OW EL
SICHERUNGSKETTE	592291614	2	1	376	59 22 914 14	PODESTSICHERUNG KPL
SICHERUNGSMUTTER DIN 98	11219056	6	2	272	10 55 091 1	KRAFTSTOFFVORFILTER AN
SICHERUNGSMUTTER M8 A2-7	10443136	5	1	221	10 14 736 9	ANSAUGSTUTZEN ANBAU
SICHERUNGSPRUEFER	10227556	2	1	355	99 20 811 14	RESERVESICHERUNGEN
SICHERUNGSRING	10573893	3	2	587	10 50 435 2	SEILROLLE
SICHERUNGSRING	10598700	9	1	397	51 24 059 14	V.MOTOR
SICHERUNGSRING 10	10447016	7	6	475	99 14 137 14	UMLENKROLLE KPL
SICHERUNGSRING 10	10447016	23	12	606	10 51 743 9	SEILEINZIEHWINDE KPL NRS
SICHERUNGSRING 35X1.5	10008092	25	1	154	11 21 593 6	PUMPENELEMENT
SICHERUNGSRING 4	10507964	56	12	34	10 56 645 8	KLEMMKASTEN
SICHERUNGSRING 8	10447017	10	4	363	91 65 251 14	KABELDURCHFUEHRUNG KAB
SICHERUNGSRING 8	10447017	12	2	530	11 29 451 7	SEILSCHUTZ KPL
SICHERUNGSRING 8	10447017	12	2	536	11 29 488 4	SEILSCHUTZ KPL
SICHERUNGSRING 8	10447017	12	2	572	11 29 457 3	SEILSCHUTZ KPL
SICHERUNGSRING 8	10447017	12	2	573	11 29 462 6	SEILSCHUTZ KPL
SICHERUNGSRING 8	10447017	38	2	577	99 48 521 14	SPITZEN AL KPL

Bezeichnung	Artikel	Pos.	Menge	Blatt	Baugruppe	Bezeichnung
SICHERUNGSRING 8	10447017	20	10	606	10 51 743 9	SEILEINZIEHWINDE KPL NRS
SICHERUNGSRING 8 A2	10558857	45	2	450	11 23 820 3	ANLENKSTUECK KPL
SICHERUNGSRING 8 A2	10558857	12	2	484	11 28 725 5	SEILSCHUTZ KPL
SICHERUNGSRING AEHNL.DI	10220937	25	1	144	11 22 127 4	PUMPENELEMENT
SICHERUNGSRING DIN 471	10171594	29	3	412	96 93 178 01	FAHRANTRIEB
SICHERUNGSRING DIN 471	4280008	31	4	97	10 11 835 0	ANSCHLUSSGEHAEUSE
SICHERUNGSRING DIN 471 1	428011901	19	5	412	96 93 178 01	FAHRANTRIEB
SICHERUNGSRING DIN 471 14	11293196	8	1	400	10 44 510 2	SCHNELLVERSCHLUSSKUPPL
SICHERUNGSRING DIN 471 1	428001014	45	1	615	54 02 703 14	FLANSCH KPL
SICHERUNGSRING DIN 471 2	4280020	3	3	457	61 61 541 14	KABELTROMMEL
SICHERUNGSRING DIN 471 3	428002914	13	1	617	54 02 705 14	ANTRIEB KPL
SICHERUNGSRING DIN 471 45	10171583	49	3	412	96 93 178 01	FAHRANTRIEB
SICHERUNGSRING DIN 471 45	4280032	41	2	124	10 13 802 7	RS WELLE
SICHERUNGSRING DIN 471 5	4280034	41	1	111	98 84 402	RS WELLE
SICHERUNGSRING DIN 471 5	428004514	30	1	616	54 02 704 14	ABTRIEB KPL
SICHERUNGSRING DIN 471 5	400093303	39	3	412	96 93 178 01	FAHRANTRIEB
SICHERUNGSRING DIN 471 A	10530197	360	8	78	11 24 682 0	VERTEILERGETRIEBE
SICHERUNGSRING DIN 471 A	485529714	370	2	78	11 24 682 0	VERTEILERGETRIEBE
SICHERUNGSRING DIN 472	4281017	40	1	124	10 13 802 7	RS WELLE
SICHERUNGSRING DIN 472	4281017	40	1	132	10 13 803 2	RS VERSCHLUSSRING
SICHERUNGSRING DIN 472 11	10171636	73	1	412	96 93 178 01	FAHRANTRIEB
SICHERUNGSRING DIN 472 2	428107714	21	1	617	54 02 705 14	ANTRIEB KPL
SICHERUNGSRING DIN 472 3	428100914	46	1	615	54 02 703 14	FLANSCH KPL
SICHERUNGSRING DIN 472 46	428107101	76	1	412	96 93 178 01	FAHRANTRIEB
SICHERUNGSRING DIN 472 6	4281037	30	2	548	59 21 280 14	EINFACHWIRKZYL
SICHERUNGSRING DIN 472 6	4281037	14	1	617	54 02 705 14	ANTRIEB KPL
SICHERUNGSRING DIN 472 8	4281013	4	1	615	54 02 703 14	FLANSCH KPL
SICHERUNGSRING DIN 472 9	4281016	31	1	616	54 02 704 14	ABTRIEB KPL
SICHERUNGSRING DIN 472 J5	11268816	380	2	78	11 24 682 0	VERTEILERGETRIEBE
SICHERUNGSSCHEIBE 10 254	10536579	19	4	450	11 23 820 3	ANLENKSTUECK KPL
SICHERUNGSSCHEIBE 10 254	10536579	16	4	513	11 28 610 5	ARRETIERUNG KPL
SICHERUNGSSCHEIBE 10 254	10536579	33	4	533	11 29 426 7	MONTAGETEILE
SICHERUNGSSCHEIBE 10 254	10536580	17	2	574	10 55 753 7	SPITZENENDSCHALTER LI EIN
SICHERUNGSSCHEIBE 10 254	10536580	17	2	575	10 55 757 6	SPITZENENDSCHALTER RE E
SICHERUNGSSCHEIBE 10 254	10536580	52	16	637	99 10 116 14	SEILFUEHRUNG
SICHERUNGSSCHEIBE 10 254	10536580	11	4	706	10 52 293 0	DW GEBER NRS
SICHERUNGSSCHEIBE 12 254	10536581	24	8	473	11 24 444 4	A-BOCK 1 KPL
SICHERUNGSSCHEIBE 12 254	10536581	29	8	521	99 23 398 14	ROLLENSATZ
SICHERUNGSSCHEIBE 12 254	10536581	14	4	537	99 35 031 14	SEILSCHUTZ KPL
SICHERUNGSSCHEIBE 12 254	10536581	50	12	570	11 28 774 6	MONTAGETEILE
SICHERUNGSSCHEIBE 12 254	10536581	18	4	574	10 55 753 7	SPITZENENDSCHALTER LI EIN
SICHERUNGSSCHEIBE 12 254	10536581	18	4	575	10 55 757 6	SPITZENENDSCHALTER RE E
SICHERUNGSSCHEIBE 12 254	10536581	21	4	582	99 38 329 14	SPITZEN AL KPL
SICHERUNGSSCHEIBE 12 254	10536582	21	13	320	10 51 968 6	EZW OW EINBAU KPL
SICHERUNGSSCHEIBE 12 254	10536582	1	8	329	99 29 258 14	EZW ROLLENPAKET
SICHERUNGSSCHEIBE 12 254	10536582	48	2	582	99 38 329 14	SPITZEN AL KPL
SICHERUNGSSCHEIBE 14 27	10536583	16	4	529	11 29 649 2	BOLZEN KPL
SICHERUNGSSCHEIBE 16 27	10536597	30	8	521	99 23 398 14	ROLLENSATZ
SICHERUNGSSCHEIBE 16 27	10536597	13	5	527	11 29 648 5	BOLZEN KPL
SICHERUNGSSCHEIBE 16 27	10536597	52	12	533	11 29 426 7	MONTAGETEILE
SICHERUNGSSCHEIBE 16 27	10536597	39	10	541	11 29 938 4	MONTAGETEILE
SICHERUNGSSCHEIBE 16 27	10536598	31	16	320	10 51 968 6	EZW OW EINBAU KPL
SICHERUNGSSCHEIBE 17X24X	4239009	24	8	95	10 11 834 9	DOPPELV.PUMPE
SICHERUNGSSCHEIBE 20 27	10536600	15	22	320	10 51 968 6	EZW OW EINBAU KPL
SICHERUNGSSCHEIBE 20X21X	423912001	69	12	412	96 93 178 01	FAHRANTRIEB
SICHERUNGSSCHEIBE 8 254 S	10536577	16	4	574	10 55 753 7	SPITZENENDSCHALTER LI EIN
SICHERUNGSSCHEIBE 8 254 S	10536577	16	4	575	10 55 757 6	SPITZENENDSCHALTER RE E
SICHERUNGSSCHEIBE 8 254 S	10536577	22	2	680	11 22 344 2	KAMERA EINBAU
SIEB	11239595	6	1	277	11 24 240 8	HARNSTOFFBEHAELTER
SIGNALLEUCHTE	10524927	100	1	352	11 27 973 6	KABINE EL

Bezeichnung	Artikel	Pos.	Menge	Blatt	Baugruppe	Bezeichnung
SIGNALLEUCHTE	10524927	37	2	474	10 53 120 7	A-BOCK EL
SITZ	11226118	130	1	346	51 14 347 14	DW SICHERUNGSBLOCK
SITZRAHMEN	7024996	15	1	380	10 22 506 8	FAHRERSITZ
SITZRAHMEN	7028516	15	1	692	10 04 363 3	FAHRERSITZ LUFTGEFEDERT
SITZRAHMEN	7029878	10	1	693	70 28 516	SITZRAHMEN
SITZTEIL KPL	7024981	12	1	380	10 22 506 8	FAHRERSITZ
SITZTEIL KPL	7027139	12	1	692	10 04 363 3	FAHRERSITZ LUFTGEFEDERT
SITZWANNE	10165637	65	1	380	10 22 506 8	FAHRERSITZ
SOCKELGEHAEUSE	605604914	93	1	29	11 24 519 0	OW EL
SOCKELGEHAEUSE	693157014	80	2	566	10 57 624 5	KABELSATZ
SOCKELGEHAEUSE	693157114	50	1	578	97 14 959 03	SPITZENENDSCHALTER EL
SOCKELGEHAEUSE	693157114	50	1	583	91 95 871 14	SPITZENENDSCHALTER EL
SOCKELGEHAEUSE	693157114	50	1	634	10 51 167 1	ENDSCHALTER EL
SOFTWARE	10524422	401	1	3	01 38 281 14	LR 1300 SX
SONDERVERSCHRAUBUNG	10446305	28	1	75	11 24 773 5	AGGREGAT HYDR
SONDERVERSCHRAUBUNG	289031614	13	1	435	11 26 260 6	WINDE 1 HYDR
SONDERVERSCHRAUBUNG	289031614	13	1	441	11 26 261 1	WINDE 2 HYDR
SONNENBLENDE	592290714	6	1	375	59 22 905 14	SPIEGEL + SONNENBLENDE
SONNENRAD	540270714	13	1	613	54 02 701 14	PLANETENSTUFE
SONNENRAD	540270914	23	1	613	54 02 701 14	PLANETENSTUFE
SONNENRAD	9443784	40	1	412	96 93 178 01	FAHRANTRIEB
SONNENRAD	944404503	20	1	412	96 93 178 01	FAHRANTRIEB
SONNENRAD	944405203	30	1	412	96 93 178 01	FAHRANTRIEB
SONNENROLLO	592291214	102	1	367	10 35 250 8	KABINE
SPANNBAND	10581173	20	2	275	11 24 114 5	ANLAGE HARNSTOFF EINBAU
SPANNER HYDR KPL	10557163	2	1	409	10 55 716 1	LEITRADEINHEIT KPL
SPANNHUELSE	10097989	7	2	413	79 05 233 14	TRAGROLLE KPL
SPANNSCHELLE	10122841	2	1	232	10 14 274 2	KUEHLMITTELKRUEMMER AN
SPANNSCHELLE	10127984	2	1	222	10 14 736 4	LUFTANSAUGUNG ANBAU
SPANNSCHELLE	10127984	30	9	261	11 24 114 1	KUEHLER EINBAU LADELUFT
SPANNSCHELLE	10132073	10	4	235	10 14 144 3	ABGASROHR VORM.
SPANNSCHELLE	10138820	3	1	230	10 14 821 5	THERMOSTATGEHAEUSE AN
SPANNSCHELLE	10138820	4	1	237	10 14 511 2	ABGASSTUTZEN ANBAU
SPANNSCHLOSS		10	-1	688	10 51 728 0	KABINENNEIGUNG NRS
SPANNSCHLOSS	790306414	64	1	58	10 58 163 4	KABINENAUFHAENGUNG KPL
SPANNSTIFT DIN 1481 5X16 S	11226135	170	1	346	51 14 347 14	DW SICHERUNGSBLOCK
SPANNSTIFT ISO 13337 8X10 S	4980638	44	2	127	10 12 224 5	RS HEBEL
SPANNSTIFT ISO 8752 2X6 ST	11001743	6	1	210	10 13 508 0	DRUCKROHRSTUTZEN
SPANNSTIFT ISO 8752 5X16	432003714	97	2	451	11 23 820 3	ANLENKSTUECK KPL
SPANNSTIFT ISO 8752 5X16	432003714	35	2	525	11 24 336 5	ANLENKSTUECK NADEL KPL
SPANNSTIFT ISO 8752 8X16 S	432008001	78	1	412	96 93 178 01	FAHRANTRIEB
SPANNUNGSWANDLER	693183914	91	1	354	10 55 963 5	SCHALTSCHR X1
SPANNVORRICHTUNG	10153373	5	1	226	10 14 286 0	KLIMAKOMPRESSOR ANBAU
SPERRVENTIL	11226088	100	2	346	51 14 347 14	DW SICHERUNGSBLOCK
SPIEGEL	592290814	8	1	375	59 22 905 14	SPIEGEL + SONNENBLENDE
SPIEGEL + SONNENBLENDE	592290514	85	1	367	10 35 250 8	KABINE
SPIRALBACKRING	540273214	20	1	617	54 02 705 14	ANTRIEB KPL
SPIRALFEDER TUERBAND	10509153	32	4	619	10 55 372 1	DACHGELAENDER NRS
SPIRALSPANNSTIFT DIN 7344	11306379	6	1	677	11 23 623 3	TASCHENSCHLOSS
SPITZEN AL KPL	993832914	119	1	3	01 38 281 14	LR 1300 SX
SPITZEN AL KPL	994852114	115	1	3	01 38 281 14	LR 1300 SX
SPITZEN AL SCHWK	993877114	10	1	582	99 38 329 14	SPITZEN AL KPL
SPITZEN AL SCHWK	994852014	1	1	577	99 48 521 14	SPITZEN AL KPL
SPITZEN AL UMBAU	918907114	116	1	3	01 38 281 14	LR 1300 SX
SPITZENENDSCHALTER EINBA	993080014	15	2	521	99 23 398 14	ROLLENSATZ
SPITZENENDSCHALTER EL	919587114	3	1	582	99 38 329 14	SPITZEN AL KPL
SPITZENENDSCHALTER EL	971495903	29	1	577	99 48 521 14	SPITZEN AL KPL
SPITZENENDSCHALTER LI EIN	10557537	19	1	564	11 24 263 6	NADELKOPF KPL
SPITZENENDSCHALTER RE E	10557576	20	1	564	11 24 263 6	NADELKOPF KPL
SPLINT ISO 1234 10X100 A4	433010614	30	3	582	99 38 329 14	SPITZEN AL KPL

Bezeichnung	Artikel	Pos.	Menge	Blatt	Baugruppe	Bezeichnung
SPLINT ISO 1234 10X63 A4	433014214	21	2	473	11 24 444 4	A-BOCK 1 KPL
SPLINT ISO 1234 10X80 A4	433010314	20	2	64	10 51 969 4	A-BOCK AUFRICHTZYL EINBA
SPLINT ISO 1234 10X80 A4	433010314	2	2	493	91 85 910 14	HALTESTANGE KPL
SPLINT ISO 1234 10X80 A4	433010314	2	2	501	91 85 911 14	HALTESTANGE KPL
SPLINT ISO 1234 10X80 A4	433010314	2	6	507	99 03 609 14	HALTESTANGE KPL
SPLINT ISO 1234 10X80 A4	433010314	50	2	512	11 28 629 9	MONTAGETEILE
SPLINT ISO 1234 10X80 A4	433010314	33	10	535	99 26 359 14	HALTESTANGE KPL
SPLINT ISO 1234 10X80 A4	433010314	20	12	542	10 59 968 1	HALTESTANGE KPL
SPLINT ISO 1234 10X80 A4	433010314	18	10	571	99 26 362 14	HALTESTANGE KPL
SPLINT ISO 1234 10X80 A4	433010314	32	4	577	99 48 521 14	SPITZEN AL KPL
SPLINT ISO 1234 10X80 A4	433010314	25	4	644	10 51 971 3	SELBSTVERLADESYSTEM NR
SPLINT ISO 1234 10X80 A4	433010314	21	1	650	11 23 619 7	SELBSTVERLADESYSTEM NR
SPLINT ISO 1234 13X112 A4	433011114	21	2	644	10 51 971 3	SELBSTVERLADESYSTEM NR
SPLINT ISO 1234 5X32	433006314	4	2	414	10 50 179 5	AUFSTIEG KPL
SPLINT ISO 1234 5X32	433006314	7	2	516	11 28 357 6	MONTAGETEILE
SPLINT ISO 1234 5X45	433006614	4	4	63	99 23 451 14	ANLENKBOLZEN EINBAU
SPLINT ISO 1234 5X50	433006714	12	8	311	10 51 969 7	NADELEINZIEHWINDE
SPLINT ISO 1234 6.3X32 ST	433007508	31	4	58	10 58 163 4	KABINENAUFHAENGUNG KPL
SPLINT ISO 1234 6.3X45	433007708	25	4	58	10 58 163 4	KABINENAUFHAENGUNG KPL
SPLINT ISO 1234 6.3X45 A4	433007714	47	2	633	10 51 176 9	ZWISCHENHUB NADEL AL KP
SPLINT ISO 1234 6.3X50 A4	433007814	22	2	633	10 51 176 9	ZWISCHENHUB NADEL AL KP
SPLINT ISO 1234 6.3X56 A4	433007914	18	8	544	10 53 145 5	RUECKFALLSTUETZE NADEL
SPLINT ISO 1234 6.3X56 A4	433007914	28	1	570	11 28 774 6	MONTAGETEILE
SPLINT ISO 1234 6.3X63	433008108	26	4	473	11 24 444 4	A-BOCK 1 KPL
SPLINT ISO 1234 6.3X63	433008108	33	2	521	99 23 398 14	ROLLENSATZ
SPLINT ISO 1234 6.3X63	433008108	29	4	570	11 28 774 6	MONTAGETEILE
SPLINT ISO 1234 6.3X71 A4	433008214	16	4	64	10 51 969 4	A-BOCK AUFRICHTZYL EINBA
SPLINT ISO 1234 8X100 A4	433009514	14	2	460	99 30 060 14	HALTESTANGE KPL
SPLINT ISO 1234 8X100 A4	433009514	15	8	476	99 26 417 14	HALTESTANGE KPL
SPLINT ISO 1234 8X100 A4	433009514	14	2	492	99 24 404 14	HALTESTANGE KPL
SPLINT ISO 1234 8X100 A4	433009514	14	2	500	99 24 405 14	HALTESTANGE KPL
SPLINT ISO 1234 8X100 A4	433009514	14	6	506	99 24 406 14	HALTESTANGE KPL
SPLINT ISO 1234 8X100 A4	433009514	14	6	519	99 24 594 14	HALTESTANGE KPL
SPLINT ISO 1234 8X50 A4	433008814	48	2	512	11 28 629 9	MONTAGETEILE
SPLINT ISO 1234 8X50 A4	433008814	25	4	582	99 38 329 14	SPITZEN AL KPL
SPLINT ISO 1234 8X56 A4	433009014	31	4	164	11 24 113 8	MOTORLAGER KPL
SPLINT ISO 1234 8X56 A4	433009014	30	2	637	99 10 116 14	SEILFUEHRUNG
SPLINT ISO 1234 8X63 A4	433009114	15	2	58	10 58 163 4	KABINENAUFHAENGUNG KPL
SPLINT ISO 1234 8X63 A4	433009114	49	2	512	11 28 629 9	MONTAGETEILE
SPLINT ISO 1234 8X63 A4	433009114	38	1	533	11 29 426 7	MONTAGETEILE
SPLINT ISO 1234 8X63 A4	433009114	19	2	577	99 48 521 14	SPITZEN AL KPL
SPLINT ISO 1234 8X80 A4	433009414	32	4	535	99 26 359 14	HALTESTANGE KPL
SPLINT ISO 1234 8X80 A4	433009414	12	1	537	99 35 031 14	SEILSCHUTZ KPL
SPLINT ISO 1234 8X90	433009714	33	4	644	10 51 971 3	SELBSTVERLADESYSTEM NR
SPRENGRING 140	747460514	3	2	638	91 49 419 14	SEILROLLE KPL
SPRENGRING 5 X 135	10352383	180	2	670	59 21 826 14	ABSTUETZZYL
SPRENGRING 52X2 FST	4980482	7	2	190	10 14 351 1	KOLBEN KPL.
SPRENGRING 5X175	10352382	175	1	669	59 21 826 14	ABSTUETZZYL
SPRENGRING 6 X 172	10352384	185	1	670	59 21 826 14	ABSTUETZZYL
STAHLDRAHTSEIL	773400308	73	0.25	29	11 24 519 0	OW EL
STAHLDRAHTSEIL	773400308	25	0.9	515	10 59 863 3	PENDEL KPL
STAHLDRAHTSEIL	773400308	12	0.62	579	11 25 204 2	AUFLAGE KPL
STAHLDRAHTSEIL	773400314	22	2	637	99 10 116 14	SEILFUEHRUNG
STAHLKUGEL	11226127	140	1	346	51 14 347 14	DW SICHERUNGSBLOCK
STANDHEIZUNG EL NRS	11266526	3	1	601	11 29 551 4	KAELTEPAKET NRS
STANGE	919421714	8	2	639	99 23 405 14	ZWISCHENABSPANNUNG NR
STANGE KPL	11273458	212	2	352	11 27 973 6	KABINE EL
STANGENDICHTSATZ	11267400	10	2	86	11 21 993 0	PUMPENGEHAEUSE
STANGENFUEHRUNGSRING	513319814	17	1	403	51 33 141 14	DOPPELWIRKZYL
STARTER	10410932	1	1	240	10 12 037 2	STARTER ANBAU

Bezeichnung	Artikel	Pos.	Menge	Blatt	Baugruppe	Bezeichnung
STARTER ANBAU	10120372	450	1	172	10 14 032 7	DIESELMOTOR
STAUBKAPPE	605013508	51	2	474	10 53 120 7	A-BOCK EL
STAUBKAPPE	6203401	1001	1	568	99 38 560 14	KABEL
STAUBMUFFE	7364488	4	1	446	51 17 043 14	SCHNELLVERSCHRAUBUNG
STAUBMUFFE	7615441	1	1	24	51 05 719 14	SCHNELLVERSCHRAUBUNG
STAUBSCHUTZ	10040064	2	1	227	10 11 676 7	KLIMAKOMPRESSOR
STAUBSTECKER	7364491	4	1	22	51 17 042 14	SCHNELLVERSCHRAUBUNG
STECKDOSE	10520078	131	1	29	11 24 519 0	OW EL
STECKDOSE	6205239	13	1	160	11 24 448 7	ZENTRALAGGREGAT EL
STECKER	10447747	2	4	402	10 55 154 8	SCHNELLVERSCHLUSSKUPPL
STECKER	10447747	2	6	454	10 55 157 6	SCHNELLVERSCHLUSSKUPPL
STECKER	11247913	1	4	404	10 55 119 1	DECKEL KPL
STECKER	605253314	201	11	354	10 55 963 5	SCHALTSCHR X1
STECKER	605253414	211	1	354	10 55 963 5	SCHALTSCHR X1
STECKER	605254114	213	1	354	10 55 963 5	SCHALTSCHR X1
STECKER	605254214	203	11	354	10 55 963 5	SCHALTSCHR X1
STECKER	605260114	1000	1	568	99 38 560 14	KABEL
STECKER	605264814	51	3	351	11 27 973 6	KABINE EL
STECKER	693013014	11	1	712	10 52 957 6	BETANKUNGSPUMPE KPL
STECKER	950490414	11	1	487	11 28 397 7	AUFFANGWANNE KPL
STECKER	950490414	11	1	488	11 28 397 8	AUFFANGWANNE KPL
STECKER	970535203	42	2	633	10 51 176 9	ZWISCHENHUB NADEL AL KP
STECKER	971230303	60	10	621	10 55 372 1	DACHGELAENDER NRS
STECKER	993352014	53	8	621	10 55 372 1	DACHGELAENDER NRS
STECKER M.LEITUNG	11222783	120	3	29	11 24 519 0	OW EL
STECKER M.LEITUNG	11261378	121	3	29	11 24 519 0	OW EL
STECKEREINSATZ	605616014	36	2	628	99 24 978 14	AL EL
STECKHUELSE	602209314	80	42	34	10 56 645 8	KLEMMKASTEN
STECKHUELSE	602209314	80	3	568	99 38 560 14	KABEL
STECKHUELSE	602303214	73	1	34	10 56 645 8	KLEMMKASTEN
STECKHUELSENGEHAEUSE	602209714	93	1	354	10 55 963 5	SCHALTSCHR X1
STECKKARTE PLATINE 1	917585714	51	1	354	10 55 963 5	SCHALTSCHR X1
STECKKUPPLUNG	10678754	23	2	275	11 24 114 5	ANLAGE HARNSTOFF EINBAU
STECKKUPPLUNG	11082454	22	2	275	11 24 114 5	ANLAGE HARNSTOFF EINBAU
STECKKUPPLUNG	11482007	25	4	275	11 24 114 5	ANLAGE HARNSTOFF EINBAU
STECKNUSS 36 X 1 "	885380314	55	1	443	10 56 187 5	WERKZEUGAUSRUESTUNG
STECKROHR	10125386	6	1	181	10 14 844 4	OELWANNE MIT BEFEST.
STELLKOLBEN	11219925	1	1	81	11 21 990 5	VERSTELLUNG
STELLSCHRAUBE M10X101 31	9076176	13	1	133	10 12 226 2	RS VERSTELLUNG
STERNGRIFF	11242422	23	2	680	11 22 344 2	KAMERA EINBAU
STEUERBLOCK	511640614	1	1	158	51 16 377 14	VENTILBLOCKSPEISEDRUCK
STEUERDECKEL	511640814	3	1	158	51 16 377 14	VENTILBLOCKSPEISEDRUCK
STEUERGERAET	10144039	5	1	275	11 24 114 5	ANLAGE HARNSTOFF EINBAU
STEUERGERAET	11219917	5	1	79	10 53 430 7	V.PUMPE
STEUERGERAET ANBAU	10146795	571	1	173	10 14 032 7	DIESELMOTOR
STEUERKOLBEN	11600281	3	1	89	11 06 730 4	ABSCHALTVENTIL
STEUERKONSOLE LI KPL	10223224	16	1	350	11 29 327 3	KABINE KPL
STEUERKONSOLE RE KPL	11260956	17	1	350	11 29 327 3	KABINE KPL
STEUERLEITUNG	600454314	53	6.5	351	11 27 973 6	KABINE EL
STEUERLEITUNG	600454314	85	4.5	566	10 57 624 5	KABELSATZ
STEUERLEITUNG	600454314	1002	2	568	99 38 560 14	KABEL
STEUERLEITUNG	600454314	35	4	578	97 14 959 03	SPITZENENDSCHALTER EL
STEUERLEITUNG	600454314	35	4	583	91 95 871 14	SPITZENENDSCHALTER EL
STEUERLEITUNG	600454314	35	60	634	10 51 167 1	ENDSCHALTER EL
STEUERLEITUNG	693030914	97	2	352	11 27 973 6	KABINE EL
STEUERPLATTE LINKS	9887035	2	1	106	98 89 833	RS ZYLINDER+STEUERPLATT
STEUERPULT	11236557	10	1	600	11 25 016 2	NOTBETRIEB EL NRS
STEUERPULT	11236937	10	1	35	11 23 908 2	STEUERPULT
STEUERPULT	11239082	111	1	29	11 24 519 0	OW EL
STEUERRECHNER	10223180	31	1	354	10 55 963 5	SCHALTSCHR X1

Bezeichnung	Artikel	Pos.	Menge	Blatt	Baugruppe	Bezeichnung
STEUERSTAND LI	10519079	10	1	351	11 27 973 6	KABINE EL
STEUERSTAND RE	11260957	20	1	351	11 27 973 6	KABINE EL
STEUERUNGSTEIL	9079870	110	6	171	10 14 032 7	DIESELMOTOR
STEUERVENTIL	10114975	2	1	153	11 21 591 3	PUMPENELEMENT
STEUERVENTIL	10351603	2	1	143	11 22 126 8	PUMPENELEMENT
STEUERVENTIL	10409413	1	1	148	10 35 160 3	STEUERVENTIL
STEUERVENTIL	11215942	1	1	157	10 11 497 5	STEUERVENTIL
STIFT	10115230	11	1	399	11 22 473 8	VERSTELLUNG
STIFT	602331114	112	4	697	10 56 427 9	KABELSTRANG
STIFT	9888133	19	1	104	10 13 975 2	RS SCHWENKJOCH
STIFTEINSATZ	605604714	51	1	566	10 57 624 5	KABELSATZ
STIFTEINSATZ	605604714	31	1	578	97 14 959 03	SPITZENENDSCHALTER EL
STIFTEINSATZ	605604714	31	1	583	91 95 871 14	SPITZENENDSCHALTER EL
STIFTEINSATZ	605604714	31	1	634	10 51 167 1	ENDSCHALTER EL
STIFTKONTAKT	605619814	53	6	566	10 57 624 5	KABELSATZ
STIFTKONTAKT	6905271	13	2	712	10 52 957 6	BETANKUNGSPUMPE KPL
STIFTSCHRAUBE DIN 835 M10	10489376	3	3	222	10 14 736 4	LUFTANSAUGUNG ANBAU
STIFTSCHRAUBE DIN 835 M10	4901450	4	3	240	10 12 037 2	STARTER ANBAU
STIFTSCHRAUBE DIN 939 M10	4068017	60	6	48	10 56 073 3	KRAFTSTOFFTANK KPL
STIFTSCHRAUBE DIN 939 M8	11690424	10	2	237	10 14 511 2	ABGASSTUTZEN ANBAU
STIFTSCHRAUBE M16X1.5	9275003	20	8	99	10 11 835 7	RS ANSCHLUSSGEHAEUSE
STIRNRAD	11294362	100	1	78	11 24 682 0	VERTEILERGETRIEBE
STIRNRAD	11294363	110	4	78	11 24 682 0	VERTEILERGETRIEBE
STOPFEN	10123528	3	1	129	10 14 131 6	ANSCHLUSSPLATTE VORM.
STOSSDAEMPFER	10289994	55	1	382	10 28 999 3	SCHWINGSYSTEM
STOSSDAEMPFER	10289994	55	1	694	10 28 999 2	SCHWINGSYSTEM
STUETZRING	10352368	140	1	669	59 21 826 14	ABSTUETZZYL
STUETZRING	511710214	1	1	22	51 17 042 14	SCHNELLVERSCHRAUBUNG
STUETZRING	511710214	1	1	446	51 17 043 14	SCHNELLVERSCHRAUBUNG
STUETZRING	511710314	13	1	24	51 05 719 14	SCHNELLVERSCHRAUBUNG
STUETZRING GESCHL.	11007749	14	1	119	10 12 321 4	DS DRUCKREDUZIERVENTIL
STUETZRING GESCHL.	11007751	13	1	119	10 12 321 4	DS DRUCKREDUZIERVENTIL
STUETZRING GESCHL.	7382212	23	1	136	10 12 226 5	DS REGELVENTIL
STUETZSCHEIBE 45X56X0.3	10123256	10	2	125	98 85 937	SCHEIBENSATZ
STUETZSCHEIBE 45X56X0.4	10123257	11	2	125	98 85 937	SCHEIBENSATZ
STUETZSCHEIBE 45X56X0.5	10123258	12	2	125	98 85 937	SCHEIBENSATZ
STUETZSCHEIBE S32X44X0.5	7380815	21	4	99	10 11 835 7	RS ANSCHLUSSGEHAEUSE
STUETZSCHEIBE S32X44X0.5	7380815	21	4	100	92 74 731	DS ANSCHLUSSGEHAEUSE
STUETZSCHEIBE S32X44X1.3	7380586	22	2	99	10 11 835 7	RS ANSCHLUSSGEHAEUSE
STUETZSCHEIBE S32X44X1.3	7380586	20	2	100	92 74 731	DS ANSCHLUSSGEHAEUSE
STUETZSCHEIBE S32X44X2 FS	7380291	19	2	99	10 11 835 7	RS ANSCHLUSSGEHAEUSE
STUETZSCHEIBE S32X44X2 FS	7380291	19	2	100	92 74 731	DS ANSCHLUSSGEHAEUSE
STUETZSCHEIBE S52X70X0.4	7380698	10	1	108	98 85 924	SCHEIBENSATZ
STUETZSCHEIBE S52X70X0.5	7380697	11	1	108	98 85 924	SCHEIBENSATZ
STUETZSCHEIBE S52X70X0.6	7380696	12	1	108	98 85 924	SCHEIBENSATZ
STUETZSCHEIBE S52X70X0.7	7380695	13	1	108	98 85 924	SCHEIBENSATZ
STUTZEN	10334218	11	1	238	10 14 622 4	TAKTVENTIL
STUTZEN	9273271	2	2	205	10 14 294 2	SCHMIEROELFILTER ANBAU
STUTZEN	942430914	31	4	39	99 14 627 14	WARMWASSERHEIZUNG OW
STUTZEN	956385814	45	2	275	11 24 114 5	ANLAGE HARNSTOFF EINBAU
STUTZEN	956385814	35	2	604	11 29 444 5	HEIZUNG NRS
T-NUTENSTEIN M10X12	890035314	59	21	284	11 24 409 0	VERKLEIDUNG OW EINBAU KP
T-STUECK	553087814	37	1	275	11 24 114 5	ANLAGE HARNSTOFF EINBAU
TAKTVENTIL	10146224	436	1	172	10 14 032 7	DIESELMOTOR
TAKTVENTIL	10149191	1	1	238	10 14 622 4	TAKTVENTIL
TANK HYDR EINBAU	10560700	15	1	6	11 24 047 9	OW KPL
TANK HYDR KPL	10560701	3	1	42	10 56 070 0	TANK HYDR EINBAU
TANK HYDR SCHWK	10560703	3	1	44	10 56 070 1	TANK HYDR KPL
TANKVERSCHLUSS	11101351	4	1	277	11 24 240 8	HARNSTOFFBEHAELTER
TANKVERSCHLUSS	7365412	11	1	48	10 56 073 3	KRAFTSTOFFTANK KPL

Bezeichnung	Artikel	Pos.	Menge	Blatt	Baugruppe	Bezeichnung
TASCHENSCHLOSS	11236233	11	1	676	11 23 626 6	SEILHALTERUNG NRS
TASCHENSCHLOSS	773941308	11	1	317	99 23 387 14	BESEILUNG EZW NADEL AL
TASTATUR	10531718	12	1	356	10 51 907 9	STEUERSTAND LI
TASTATUR BEDIENPULT X11	10036107	11	1	356	10 51 907 9	STEUERSTAND LI
TELLER	10098157	60	11	284	11 24 409 0	VERKLEIDUNG OW EINBAU KP
TELLER	10098157	18	20	298	10 54 591 0	MOTORABDECKUNG
TELLER	10098157	12	28	422	99 26 718 14	PODEST
TELLER	10098157	42	53	450	11 23 820 3	ANLENKSTUECK KPL
TELLER	10098157	20	6	459	10 58 193 7	GITTERROST KPL
TELLER	10098157	21	3	485	11 28 390 8	AL BEGEHUNG
TELLER	10098157	12	2	486	11 28 391 3	BEFESTIGUNGSCHELLE
TELLER	10098157	21	3	499	11 28 583 8	AL BEGEHUNG
TELLER	10098157	21	3	505	11 28 626 1	AL BEGEHUNG
TELLER	10098157	21	4	512	11 28 629 9	MONTAGETEILE
TELLER	10098157	54	6	525	11 24 336 5	ANLENKSTUECK NADEL KPL
TELLER	10098157	12	2	555	11 28 667 9	BEFESTIGUNGSCHELLE
TELLER	10098157	10	12	623	11 24 147 8	UW PODEST
TELLER	10098157	10	28	624	11 24 575 5	PODEST
TELLER	10558629	11	2	556	11 28 544 3	ABSTUETZUNG KPL
TEMP FUEHLER	10493626	50	1	28	11 24 519 0	OW EL
TEMP FUEHLER	10493626	1	2	250	10 14 297 7	MOTORREGELUNGSENSORIK
TEMP REGLER	511657614	13	1	8	11 29 618 6	OW HYDR
TEMPERATURFUEHLER	10424276	85	1	352	11 27 973 6	KABINE EL
TEMPERATURFUEHLER	11241756	40	1	28	11 24 519 0	OW EL
TEMPERATURFUEHLER KPL.	10152036	2	1	250	10 14 297 7	MOTORREGELUNGSENSORIK
TEMPERATURSCHALTER	10513459	17	1	75	11 24 773 5	AGGREGAT HYDR
TEMPERATURSENSOR	11349182	8	2	275	11 24 114 5	ANLAGE HARNSTOFF EINBAU
THERMOSTAT	10146029	2	1	230	10 14 821 5	THERMOSTATGEHAEUSE AN
THERMOSTAT	592293814	260	1	378	59 22 930 14	KLIMAGERAET
THERMOSTATGEHAEUSE	10148200	1	1	230	10 14 821 5	THERMOSTATGEHAEUSE AN
THERMOSTATGEHAEUSE AN	10148215	380	1	172	10 14 032 7	DIESELMOTOR
TRAGROHR	11245756	1	1	624	11 24 575 5	PODEST
TRAGROHR	11245757	2	2	624	11 24 575 5	PODEST
TRAGROHR	958097914	10	2	422	99 26 718 14	PODEST
TRAGROLLE KPL	790523314	15	2	408	10 55 876 0	RAUPENTRAEGER RE KPL
TRAGROLLE KPL	790523314	15	2	417	10 55 876 1	RAUPENTRAEGER LI KPL
TRAGSCHIENE	602106714	58	0.37	34	10 56 645 8	KLEMMKASTEN
TRANSPORTARM KPL	971333503	20	3	408	10 55 876 0	RAUPENTRAEGER RE KPL
TRANSPORTARM KPL	971333503	20	3	417	10 55 876 1	RAUPENTRAEGER LI KPL
TRANSPORTKONSOLE	10145229	1	1	241	10 14 286 4	TRANSPORTVORRICHTUNG
TRANSPORTSICHERUNG	11287946	11	1	481	11 24 570 5	ZWISCHENSTUECK MONTAGE
TRANSPORTSICHERUNG	11287946	11	1	497	11 24 571 1	ZWISCHENSTUECK MONTAGE
TRANSPORTSICHERUNG	11287946	11	1	503	11 24 571 7	ZWISCHENSTUECK MONTAGE
TRANSPORTSICHERUNG	11289827	11	1	551	11 24 084 9	ZWISCHENSTUECK MONTAGE
TRANSPORTSICHERUNG	11289827	11	1	558	11 24 162 7	ZWISCHENSTUECK MONTAGE
TRANSPORTSICHERUNG	11289827	11	1	561	11 24 163 1	ZWISCHENSTUECK MONTAGE
TRANSPORTVORRICHTUNG	10142864	481	1	172	10 14 032 7	DIESELMOTOR
TRANSPORTVORRICHTUNG	9079823	480	1	172	10 14 032 7	DIESELMOTOR
TRAVERSE	10589483	14	1	410	10 55 716 2	LEITRAD KPL
TRAVERSE	919075014	2	1	577	99 48 521 14	SPITZEN AL KPL
TRAVERSE	993081414	10	2	535	99 26 359 14	HALTESTANGE KPL
TRENNRELAIS	630120108	81	4	354	10 55 963 5	SCHALTSCHR X1
TRENNWAND	602832314	72	1	354	10 55 963 5	SCHALTSCHR X1
TRIEBWELLE	11219920	1	1	80	11 21 990 2	TRIEBWERK
TRIEBWERK	10287664	1	1	154	11 21 593 6	PUMPENELEMENT
TRIEBWERK	10287725	1	1	155	10 28 766 4	TRIEBWERK
TRIEBWERK	10324889	1	1	144	11 22 127 4	PUMPENELEMENT
TRIEBWERK	10324892	1	1	145	10 32 488 9	TRIEBWERK
TRIEBWERK	10503513	1	1	397	51 24 059 14	V.MOTOR
TRIEBWERK	11219902	1	1	79	10 53 430 7	V.PUMPE

Bezeichnung	Artikel	Pos.	Menge	Blatt	Baugruppe	Bezeichnung
TRIEBWERK HYDRAULIKTEIL	11219924	3	1	80	11 21 990 2	TRIEBWERK
TRITTSTUFE	10501783	1	1	414	10 50 179 5	AUFSTIEG KPL
TROCKNER	11236711	4	1	700	11 21 750 0	VERFLUESSIGER
TROMMELKOERPER	10227104	1	1	457	61 61 541 14	KABELTROMMEL
TUELLENGEHAEUSE	10021236	35	2	628	99 24 978 14	AL EL
TUELLENGEHAEUSE	693155014	50	1	566	10 57 624 5	KABELSATZ
TUELLENGEHAEUSE	693155014	30	1	578	97 14 959 03	SPITZENENDSCHALTER EL
TUELLENGEHAEUSE	693155014	30	1	583	91 95 871 14	SPITZENENDSCHALTER EL
TUELLENGEHAEUSE	693155014	30	1	634	10 51 167 1	ENDSCHALTER EL
TUER	10565777	1	1	296	10 56 580 8	TUER
TUER	10565808	13	1	286	11 24 409 1	VERKLEIDUNG
TUER	10566237	6	1	286	11 24 409 1	VERKLEIDUNG
TUER	10566238	1	1	295	10 56 623 7	TUER
TUER	10578835	3	1	286	11 24 409 1	VERKLEIDUNG
TUER	10578836	1	1	290	10 57 883 5	TUER
TUER	10578972	1	1	292	10 57 897 6	TUER
TUER	10578976	4	5	286	11 24 409 1	VERKLEIDUNG
TUER	10579397	1	1	294	10 57 940 0	TUER
TUER	10579400	5	1	286	11 24 409 1	VERKLEIDUNG
TUERDICHTUNG	592285714	3	1	370	10 50 133 3	SCHIEBETUER
TUERE ZUBEHOEHR	10226454	2	1	366	10 35 250 8	KABINE
TUERGRIFF INNEN	10226473	19	1	370	10 50 133 3	SCHIEBETUER
TUERGRIFF INNEN	10226478	21	1	370	10 50 133 3	SCHIEBETUER
TUERKEIL	790549214	15	9	288	11 24 409 1	VERKLEIDUNG
TUERKEIL PUFFER	790549314	9	1	290	10 57 883 5	TUER
TUERKEIL PUFFER	790549314	9	1	292	10 57 897 6	TUER
TUERKEIL PUFFER	790549314	11	1	294	10 57 940 0	TUER
TUERKEIL PUFFER	790549314	11	1	295	10 56 623 7	TUER
TUERKEIL PUFFER	790549314	9	1	296	10 56 580 8	TUER
TUERSCHEIBE	11279012	1	1	371	10 22 441 3	SCHIEBEFENSTER
TUERSCHLOSS	10353879	20	1	290	10 57 883 5	TUER
TUERSCHLOSS	10353879	3	1	292	10 57 897 6	TUER
TUERSCHLOSS	10353879	10	1	294	10 57 940 0	TUER
TUERSCHLOSS	10353879	10	1	295	10 56 623 7	TUER
TUERSCHLOSS	10353879	6	1	296	10 56 580 8	TUER
TURAS	10521183	12	1	408	10 55 876 0	RAUPENTRAEGER RE KPL
TURAS	10521183	12	1	417	10 55 876 1	RAUPENTRAEGER LI KPL
TURBOLADER	10139624	1	1	236	10 14 013 6	ATL-ANBAU
TYPENSCHILD	11226148	220	1	346	51 14 347 14	DW SICHERUNGSBLOCK
TYPENSCHILD	11276851	53	1	2	01 38 281 14	LR 1300 SX
U-PROFIL	11225259	23	3	300	11 24 922 2	ABDECKUNG UNTERSEITE
U-STAHL	10222995	59	2	450	11 23 820 3	ANLENKSTUECK KPL
U-STAHL	10565639	11	2	459	10 58 193 7	GITTERROST KPL
U-STAHL	10581999	21	2	459	10 58 193 7	GITTERROST KPL
U-STAHL	10582001	77	1	451	11 23 820 3	ANLENKSTUECK KPL
U-STAHL	10582001	22	1	459	10 58 193 7	GITTERROST KPL
U-STAHL	10582020	50	2	450	11 23 820 3	ANLENKSTUECK KPL
UEBERBRUECKUNGSSTECKE	918365114	91	1	29	11 24 519 0	OW EL
UEBERWURFMUTTER DIN 38	11282770	45	1	604	11 29 444 5	HEIZUNG NRS
UMLENKROLLE KPL	991413714	32	1	473	11 24 444 4	A-BOCK 1 KPL
UMLENKROLLE VORM.	9077708	3	2	226	10 14 286 0	KLIMAKOMPRESSOR ANBAU
UNTERFLASCHE	790411214	133	1	3	01 38 281 14	LR 1300 SX
UNTERFLASCHE	790487114	137	1	3	01 38 281 14	LR 1300 SX
UW HYDR	11259815	2	1	389	11 23 547 8	UW KPL
UW KPL	11235478	33	1	2	01 38 281 14	LR 1300 SX
UW PODEST	11241478	554	1	3	01 38 281 14	LR 1300 SX
UW PODEST	992338914	38	1	2	01 38 281 14	LR 1300 SX
V-RING	10324881	4	1	147	11 49 032 3	ZYLINDER
V-RING	11251437	5	1	396	11 89 617 8	DS
V.MOTOR	11251232	2	1	435	11 26 260 6	WINDE 1 HYDR

Bezeichnung	Artikel	Pos.	Menge	Blatt	Baugruppe	Bezeichnung
V.MOTOR	11251232	2	1	441	11 26 261 1	WINDE 2 HYDR
V.MOTOR	512405914	3	2	392	11 25 903 1	VERROHRUNG HYDR
V.PUMPE	10128787	6	1	75	11 24 773 5	AGGREGAT HYDR
V.PUMPE	10226013	9	1	75	11 24 773 5	AGGREGAT HYDR
V.PUMPE	10226505	8	1	75	11 24 773 5	AGGREGAT HYDR
V.PUMPE	10530653	5	2	75	11 24 773 5	AGGREGAT HYDR
V.PUMPE	10534307	3	2	75	11 24 773 5	AGGREGAT HYDR
VENTIL	10011832	13	1	175	10 14 768 6	AGGREGATETRAEGER ANBA
VENTIL	10011832	14	1	200	10 12 948 0	OELKUEHLER VORM.
VENTIL	10445040	220	1	466	10 09 917 3	DOPPELWIRKZYL
VENTIL	11224762	12	2	399	11 22 473 8	VERSTELLUNG
VENTIL	592293314	70	1	378	59 22 930 14	KLIMAGERAET
VENTILBLOCK	10225408	4	1	66	10 51 969 5	A-BOCK AUFRICHTZYL HYDR
VENTILBLOCK	10351486	3	1	8	11 29 618 6	OW HYDR
VENTILBLOCK	11286476	1	1	8	11 29 618 6	OW HYDR
VENTILBLOCK	592145814	4	1	8	11 29 618 6	OW HYDR
VENTILBLOCKEINZELSCHEIB	10541514	6	1	8	11 29 618 6	OW HYDR
VENTILBLOCKSPEISEDRUCK	511637714	15	1	75	11 24 773 5	AGGREGAT HYDR
VENTILBRUECKE	10119695	2	2	194	10 14 843 8	KIPPHEBELBOCK KPL.
VENTILFUEHRUNG	10139064	4	4	193	10 13 728 5	ZYLINDERKOPF
VENTILHALTER	954598503	12	2	302	11 24 483 7	BEF-TEILE OW
VENTILHALTER	954598503	13	1	311	10 51 969 7	NADELEINZIEHWINDE
VENTILHALTERUNG	994001014	28	1	606	10 51 743 9	SEILEINZIEHWINDE KPL NRS
VENTILKEGELSTUECK	10004331	8	8	192	10 13 728 6	ZYLINDERKOPF VORM.
VENTILPLATTE	10575966	17	1	302	11 24 483 7	BEF-TEILE OW
VENTILSCHAFTDICHTRING	10120334	5	4	192	10 13 728 6	ZYLINDERKOPF VORM.
VENTILSITZRING AUSLASS	10128680	7	2	193	10 13 728 5	ZYLINDERKOPF
VENTILSITZRING EINLASS	9073725	6	2	193	10 13 728 5	ZYLINDERKOPF
VENTILWIPPE	7025990	32	1	693	70 28 516	SITZRAHMEN
VENTILWIPPE	7025991	33	1	693	70 28 516	SITZRAHMEN
VENTILWIPPE	7025992	34	1	693	70 28 516	SITZRAHMEN
VERBANDSKASSETTE	789011714	13	1	2	01 38 281 14	LR 1300 SX
VERBINDUNG OW UW	10519696	31	1	2	01 38 281 14	LR 1300 SX
VERBINDUNGSLASCHE	9887828	14	2	97	10 11 835 0	ANSCHLUSSGEHAEUSE
VERBINDUNGSLEITUNG	10141549	1	1	222	10 14 736 4	LUFTANSAUGUNG ANBAU
VERBINDUNGSLEITUNG ANBA	10141801	230	1	172	10 14 032 7	DIESELMOTOR
VERBINDUNGSROHR	10444797	75	1	276	11 24 114 5	ANLAGE HARNSTOFF EINBAU
VERBINDUNGSROHR	11272895	16	2	604	11 29 444 5	HEIZUNG NRS
VERDAMPFER	592293614	230	1	378	59 22 930 14	KLIMAGERAET
VERFLUESSIGER	11217500	11	1	699	11 23 189 1	KLIMAANLAGE NRS
VERKLEIDUNG	11244091	1	1	282	11 24 409 0	VERKLEIDUNG OW EINBAU KP
VERKLEIDUNG	592290114	78	1	367	10 35 250 8	KABINE
VERKLEIDUNG OW EINBAU KP	11244090	11	1	71	11 26 560 6	AGGREGAT DIESELMOTOR
VERKLEIDUNG RE	592289814	72	1	367	10 35 250 8	KABINE
VERLAENGERUNG 1 " X 410M	885392414	45	1	443	10 56 187 5	WERKZEUGAUSRUESTUNG
VERLAENGERUNGSKABEL	614027114	74	1	351	11 27 973 6	KABINE EL
VERRIEGELUNG	10572075	36	1	368	10 22 645 4	TUERE ZUBEHOEHR
VERROHRUNG HYDR	10517262	2	1	607	10 54 251 6	SEILEINZUGSWINDE HYDR NR
VERROHRUNG HYDR	10517281	2	1	688	10 51 728 0	KABINENNEIGUNG NRS
VERROHRUNG HYDR	10519591	2	1	463	10 58 510 8	RUECKFALLSTUETZEN HYDR
VERROHRUNG HYDR	10531461	2	1	545	10 53 145 6	RUECKFALLSTUETZEN HYDR
VERROHRUNG HYDR	10552161	2	1	342	10 51 968 3	DW HYDR
VERROHRUNG HYDR	10554594	2	1	673	10 53 635 1	GLEICHLAUF HYDR NRS
VERROHRUNG HYDR	11235248	2	1	667	11 23 524 6	JACK-UP SYSTEM HYDR NRS
VERROHRUNG HYDR	11259031	2	1	390	11 25 981 5	UW HYDR
VERROHRUNG HYDR	11894083	2	1	661	11 89 408 0	JACK-UP SYSTEM HYDR NRS
VERSCHLUSSATZ	11219369	4	1	84	11 21 991 0	PUMPENGEHAEUSE
VERSCHLUSSDECKEL	10599796	13	1	259	11 28 734 7	AUSGLEICHSBEHAELTER
VERSCHLUSSDECKEL	11241269	12	1	259	11 28 734 7	AUSGLEICHSBEHAELTER
VERSCHLUSSDECKEL	4001664	3	10	174	10 15 438 6	KURBELGEHAEUSE KPL.

Bezeichnung	Artikel	Pos.	Menge	Blatt	Baugruppe	Bezeichnung
VERSCHLUSSDECKEL	4980362	2	6	174	10 15 438 6	KURBELGEHAEUSE KPL.
VERSCHLUSSDECKEL	4980363	10	3	193	10 13 728 5	ZYLINDERKOPF
VERSCHLUSSDECKEL	9144757	4	1	196	10 12 653 5	ZYLINDERKOPFDECKEL ANBA
VERSCHLUSSFLANSCH	944672614	42	1	10	11 29 618 6	OW HYDR
VERSCHLUSSFLANSCH	949341514	45	1	10	11 29 618 6	OW HYDR
VERSCHLUSSFLANSCH SAE	510705314	43	2	10	11 29 618 6	OW HYDR
VERSCHLUSSFLANSCH SAE	510710814	44	4	10	11 29 618 6	OW HYDR
VERSCHLUSSFLANSCH SAE	510710814	15	1	167	10 57 532 2	ANSAUGROHR OEL KPL
VERSCHLUSSKLAPPE	11219856	11	1	494	11 23 290 7	AUFLAGE KPL
VERSCHLUSSRING	9885628	17	1	112	92 68 016	RS VERSCHLUSSRING
VERSCHLUSSSCHRAUBE	10041903	10	5	175	10 14 768 6	AGGREGATETRAEGER ANBA
VERSCHLUSSSCHRAUBE	10097983	8	1	413	79 05 233 14	TRAGROLLE KPL
VERSCHLUSSSCHRAUBE	10115232	13	1	399	11 22 473 8	VERSTELLUNG
VERSCHLUSSSCHRAUBE	10116078	4	1	215	10 14 675 3	KRAFTSTOFFFEINFILTER
VERSCHLUSSSCHRAUBE	10137108	29	3	129	10 14 131 6	ANSCHLUSSPLATTE VORM.
VERSCHLUSSSCHRAUBE	10137108	19	1	134	10 13 803 3	DICHTSATZ KPL.
VERSCHLUSSSCHRAUBE	10137108	30	3	135	10 13 803 4	DS ANSCHLUSSPLATTE
VERSCHLUSSSCHRAUBE	10137113	20	3	134	10 13 803 3	DICHTSATZ KPL.
VERSCHLUSSSCHRAUBE	10137113	24	4	135	10 13 803 4	DS ANSCHLUSSPLATTE
VERSCHLUSSSCHRAUBE	10137115	27	2	129	10 14 131 6	ANSCHLUSSPLATTE VORM.
VERSCHLUSSSCHRAUBE	10137115	27	2	135	10 13 803 4	DS ANSCHLUSSPLATTE
VERSCHLUSSSCHRAUBE	10137121	28	2	95	10 11 834 9	DOPPELV.PUMPE
VERSCHLUSSSCHRAUBE	10137121	29	2	114	92 76 408	DS DOPPELPUMPE
VERSCHLUSSSCHRAUBE	10137312	20	1	129	10 14 131 6	ANSCHLUSSPLATTE VORM.
VERSCHLUSSSCHRAUBE	10137312	20	1	135	10 13 803 4	DS ANSCHLUSSPLATTE
VERSCHLUSSSCHRAUBE	10519025	30	1	399	11 22 473 8	VERSTELLUNG
VERSCHLUSSSCHRAUBE	10598295	55	4	261	11 24 114 1	KUEHLER EINBAU LADELUFT
VERSCHLUSSSCHRAUBE	11217837	30	1	144	11 22 127 4	PUMPENELEMENT
VERSCHLUSSSCHRAUBE	11224761	7	1	399	11 22 473 8	VERSTELLUNG
VERSCHLUSSSCHRAUBE	11267402	20	1	86	11 21 993 0	PUMPENGEHAEUSE
VERSCHLUSSSCHRAUBE	11267403	28	1	86	11 21 993 0	PUMPENGEHAEUSE
VERSCHLUSSSCHRAUBE	11267415	1	1	87	10 59 347 4	DRUCKBEGRENZUNGSVENTI
VERSCHLUSSSCHRAUBE	11267421	1	1	88	11 21 936 9	VERSCHLUSSATZ
VERSCHLUSSSCHRAUBE	11267439	1	1	89	11 06 730 4	ABSCHALTVENTIL
VERSCHLUSSSCHRAUBE	11267451	1	1	91	11 26 744 7	WECHSELVENTIL
VERSCHLUSSSCHRAUBE	592316314	210	1	78	11 24 682 0	VERTEILERGETRIEBE
VERSCHLUSSSCHRAUBE	7020821	4	1	148	10 35 160 3	STEUERVENTIL
VERSCHLUSSSCHRAUBE	7380177	4	3	174	10 15 438 6	KURBELGEHAEUSE KPL.
VERSCHLUSSSCHRAUBE	7380566	6	3	174	10 15 438 6	KURBELGEHAEUSE KPL.
VERSCHLUSSSCHRAUBE	7380566	12	1	200	10 12 948 0	OELKUEHLER VORM.
VERSCHLUSSSCHRAUBE	7380566	7	1	221	10 14 736 9	ANSAUGSTUTZEN ANBAU
VERSCHLUSSSCHRAUBE	7380566	20	1	236	10 14 013 6	ATL-ANBAU
VERSCHLUSSSCHRAUBE	7380688	3	2	215	10 14 675 3	KRAFTSTOFFFEINFILTER
VERSCHLUSSSCHRAUBE	7381457	7	2	174	10 15 438 6	KURBELGEHAEUSE KPL.
VERSCHLUSSSCHRAUBE	7381457	17	1	221	10 14 736 9	ANSAUGSTUTZEN ANBAU
VERSCHLUSSSCHRAUBE	7381457	21	1	236	10 14 013 6	ATL-ANBAU
VERSCHLUSSSCHRAUBE	7381638	11	1	200	10 12 948 0	OELKUEHLER VORM.
VERSCHLUSSSCHRAUBE	7381638	10	2	242	10 11 557 7	SCHWUNGRADGEHAEUSE AN
VERSCHLUSSSCHRAUBE	7381638	4	1	252	10 14 637 4	VERSCHLUSSTEILE
VERSCHLUSSSCHRAUBE	7382203	5	2	252	10 14 637 4	VERSCHLUSSTEILE
VERSCHLUSSSCHRAUBE	7382204	8	2	200	10 12 948 0	OELKUEHLER VORM.
VERSCHLUSSSCHRAUBE	7414500	24	3	399	11 22 473 8	VERSTELLUNG
VERSCHLUSSSCHRAUBE 11S	10137918	2	1	176	10 13 845 0	ENDREGELVENTIL
VERSCHLUSSSCHRAUBE 3/4"-	7370843	30	1	154	11 21 593 6	PUMPENELEMENT
VERSCHLUSSSCHRAUBE 9S	10134944	2	1	201	10 12 949 9	ENDREGELVENTIL
VERSCHLUSSSCHRAUBE AEH	409710601	67	3	412	96 93 178 01	FAHRANTRIEB
VERSCHLUSSSCHRAUBE D26	505105814	250	2	78	11 24 682 0	VERTEILERGETRIEBE
VERSCHLUSSSCHRAUBE DIN	403900101	80	1	615	54 02 703 14	FLANSCH KPL
VERSCHLUSSSCHRAUBE DIN	403900101	34	4	665	11 89 568 6	SELBSTVERLADESYSTEM NR
VERSCHLUSSSCHRAUBE DIN	403900501	22	1	129	10 14 131 6	ANSCHLUSSPLATTE VORM.

Bezeichnung	Artikel	Pos.	Menge	Blatt	Baugruppe	Bezeichnung
VERSCHLUSSSCHRAUBE DIN	11239915	3	1	655	51 16 404 14	SENKBREMSVENTIL
VERSCHLUSSSCHRAUBE DIN	11239904	5	1	657	59 21 584 14	SENKBREMSVENTIL
VERSCHLUSSSCHRAUBE DIN	11239897	4	1	657	59 21 584 14	SENKBREMSVENTIL
VERSCHLUSSSCHRAUBE DIN	502027614	60	2	339	99 04 645 14	ANTRIEB
VERSCHLUSSSCHRAUBE DIN	502027514	122	1	339	99 04 645 14	ANTRIEB
VERSCHLUSSSCHRAUBE DIN	4600320	64	1	339	99 04 645 14	ANTRIEB
VERSCHLUSSSCHRAUBE DIN	404101608	30	2	614	54 02 702 14	SEILTROMMEL KPL
VERSCHLUSSSCHRAUBE DIN	4000898	480	9	78	11 24 682 0	VERTEILERGETRIEBE
VERSCHLUSSSCHRAUBE G1/	11226023	60	2	346	51 14 347 14	DW SICHERUNGSBLOCK
VERSCHLUSSSCHRAUBE G1/	11226129	150	1	346	51 14 347 14	DW SICHERUNGSBLOCK
VERSCHLUSSSCHRAUBE G1/	11226130	160	1	346	51 14 347 14	DW SICHERUNGSBLOCK
VERSCHLUSSSCHRAUBE G3/	11226133	165	1	346	51 14 347 14	DW SICHERUNGSBLOCK
VERSCHLUSSSCHRAUBE M1	10115237	28	2	154	11 21 593 6	PUMPENELEMENT
VERSCHLUSSSCHRAUBE M1	10115237	25	4	399	11 22 473 8	VERSTELLUNG
VERSCHLUSSSCHRAUBE M1	10337050	4	1	82	11 21 992 7	DECKEL
VERSCHLUSSSCHRAUBE M1	10337050	4	1	83	11 21 992 9	DECKEL
VERSCHLUSSSCHRAUBE M1	10337050	12	1	86	11 21 993 0	PUMPENGEHAEUSE
VERSCHLUSSSCHRAUBE M1	10337050	13	1	86	11 21 993 0	PUMPENGEHAEUSE
VERSCHLUSSSCHRAUBE M1	10337050	14	1	86	11 21 993 0	PUMPENGEHAEUSE
VERSCHLUSSSCHRAUBE M1	10337050	15	1	86	11 21 993 0	PUMPENGEHAEUSE
VERSCHLUSSSCHRAUBE M1	10337050	16	1	86	11 21 993 0	PUMPENGEHAEUSE
VERSCHLUSSSCHRAUBE M1	10337050	17	1	86	11 21 993 0	PUMPENGEHAEUSE
VERSCHLUSSSCHRAUBE M1	10337050	18	1	86	11 21 993 0	PUMPENGEHAEUSE
VERSCHLUSSSCHRAUBE M1	10337050	26	1	94	11 21 991 8	LAGERFLANSCH
VERSCHLUSSSCHRAUBE M1	10337052	21	1	86	11 21 993 0	PUMPENGEHAEUSE
VERSCHLUSSSCHRAUBE M2	10340236	19	2	273	10 30 300 7	KRAFTSTOFFVORFILTER
VERSCHLUSSSCHRAUBE M2	10349193	22	1	86	11 21 993 0	PUMPENGEHAEUSE
VERSCHLUSSSCHRAUBE M2	10349193	23	1	86	11 21 993 0	PUMPENGEHAEUSE
VERSCHLUSSSCHRAUBE M2	10503477	13	1	397	51 24 059 14	V.MOTOR
VERSCHLUSSSCHRAUBE M3	10289931	24	1	86	11 21 993 0	PUMPENGEHAEUSE
VERSCHLUSSSCHRAUBE M4	10525039	42	1	86	11 21 993 0	PUMPENGEHAEUSE
VERSCHLUSSSCHRAUBE M4	9885660	16	2	97	10 11 835 0	ANSCHLUSSGEHAEUSE
VERSCHLUSSSCHRAUBE M6	9268441	8	3	102	92 73 644	DS REGELVENTIL
VERSCHLUSSSCHRAUBE M6	9268441	8	5	129	10 14 131 6	ANSCHLUSSPLATTE VORM.
VERSCHLUSSSCHRAUBE M6	9268441	8	5	135	10 13 803 4	DS ANSCHLUSSPLATTE
VERSCHLUSSSCHRAUBE M8X	9881609	7	2	129	10 14 131 6	ANSCHLUSSPLATTE VORM.
VERSCHLUSSSCHRAUBE M8X	9881609	8	2	134	10 13 803 3	DICHTSATZ KPL.
VERSCHLUSSSCHRAUBE M8X	9881609	7	2	135	10 13 803 4	DS ANSCHLUSSPLATTE
VERSCHLUSSSTOPFEN	591645108	64	1	284	11 24 409 0	VERKLEIDUNG OW EINBAU KP
VERSCHLUSSSTOPFEN	779014014	65	2	284	11 24 409 0	VERKLEIDUNG OW EINBAU KP
VERSCHLUSSSTOPFEN	779016414	57	4	621	10 55 372 1	DACHGELAENDER NRS
VERSCHLUSSSTOPFEN	779016501	84	1	412	96 93 178 01	FAHRANTRIEB
VERSCHLUSSTEIL	10116110	521	1	172	10 14 032 7	DIESELMOTOR
VERSCHLUSSTEILE	10115664	452	1	172	10 14 032 7	DIESELMOTOR
VERSCHLUSSTEILE	10119128	522	1	172	10 14 032 7	DIESELMOTOR
VERSCHLUSSTEILE	10127979	526	1	173	10 14 032 7	DIESELMOTOR
VERSCHLUSSTEILE	10128439	524	1	173	10 14 032 7	DIESELMOTOR
VERSCHLUSSTEILE	10128440	1	1	244	10 12 843 9	VERSCHLUSSTEILE
VERSCHLUSSTEILE	10142747	630	1	173	10 14 032 7	DIESELMOTOR
VERSCHLUSSTEILE	10144027	652	1	173	10 14 032 7	DIESELMOTOR
VERSCHLUSSTEILE	10146374	656	1	173	10 14 032 7	DIESELMOTOR
VERSCHLUSSTEILE	9078249	650	1	173	10 14 032 7	DIESELMOTOR
VERSCHLUSSTEILE	9078301	654	1	173	10 14 032 7	DIESELMOTOR
VERSCHMUTZUNGSANZEIGE	592200514	20	1	75	11 24 773 5	AGGREGAT HYDR
VERSCHRAUBUNG	10035314	20	1	270	11 24 114 4	KRAFTSTOFFANLAGE
VERSCHRAUBUNG	10225291	710	3	14	11 29 618 6	OW HYDR
VERSCHRAUBUNG	10531725	616	1	76	11 24 773 5	AGGREGAT HYDR
VERSCHRAUBUNG	10597776	620	4	344	10 55 216 1	VERROHRUNG HYDR
VERSCHRAUBUNG	10801399	17	2	237	10 14 511 2	ABGASSTUTZEN ANBAU
VERSCHRAUBUNG	10813933	9	2	217	10 14 588 5	LECKOELRUECKLAUF

Bezeichnung	Artikel	Pos.	Menge	Blatt	Baugruppe	Bezeichnung
VERSCHRAUBUNG	10813934	18	1	237	10 14 511 2	ABGASSTUTZEN ANBAU
VERSCHRAUBUNG	10813935	12	2	217	10 14 588 5	LECKOELRUECKLAUF
VERSCHRAUBUNG	10816958	49	1	275	11 24 114 5	ANLAGE HARNSTOFF EINBAU
VERSCHRAUBUNG	11002988	9	1	216	10 14 333 9	KRAFTSTOFFLEITUNGEN
VERSCHRAUBUNG	11067653	8	2	272	10 55 091 1	KRAFTSTOFFVORFILTER AN
VERSCHRAUBUNG	11229464	3	1	272	10 55 091 1	KRAFTSTOFFVORFILTER AN
VERSCHRAUBUNG	11262806	10	1	53	11 26 557 2	MONTAGETEILE
VERSCHRAUBUNG	11657232	36	1	604	11 29 444 5	HEIZUNG NRS
VERSCHRAUBUNG	247000802	30	4	39	99 14 627 14	WARMWASSERHEIZUNG OW
VERSCHRAUBUNG	247000902	11	4	275	11 24 114 5	ANLAGE HARNSTOFF EINBAU
VERSCHRAUBUNG	247000902	37	2	604	11 29 444 5	HEIZUNG NRS
VERSCHRAUBUNG	247001802	613	2	652	10 51 973 8	SELBSTVERLADESYSTEM H
VERSCHRAUBUNG	247009202	649	6	14	11 29 618 6	OW HYDR
VERSCHRAUBUNG	247009202	606	2	76	11 24 773 5	AGGREGAT HYDR
VERSCHRAUBUNG	247009202	644	1	394	11 25 903 1	VERROHRUNG HYDR
VERSCHRAUBUNG	247009202	611	2	453	10 51 826 1	ANLENKSTUECK HYDR
VERSCHRAUBUNG	247009402	724	10	16	11 29 618 6	OW HYDR
VERSCHRAUBUNG	247009402	609	1	66	10 51 969 5	A-BOCK AUFRICHTZYL HYDR
VERSCHRAUBUNG	247009402	605	4	76	11 24 773 5	AGGREGAT HYDR
VERSCHRAUBUNG	247009402	606	1	312	10 51 969 8	NADELEINZIEHWINDE HYDR
VERSCHRAUBUNG	247009402	610	1	321	10 51 968 7	HAUPT EZW HYDR
VERSCHRAUBUNG	247009402	605	2	344	10 55 216 1	VERROHRUNG HYDR
VERSCHRAUBUNG	247009702	612	13	12	11 29 618 6	OW HYDR
VERSCHRAUBUNG	247009702	608	1	66	10 51 969 5	A-BOCK AUFRICHTZYL HYDR
VERSCHRAUBUNG	247009702	602	10	76	11 24 773 5	AGGREGAT HYDR
VERSCHRAUBUNG	247009702	21	1	270	11 24 114 4	KRAFTSTOFFANLAGE
VERSCHRAUBUNG	247009702	604	1	344	10 55 216 1	VERROHRUNG HYDR
VERSCHRAUBUNG	247009702	603	4	392	11 25 903 1	VERROHRUNG HYDR
VERSCHRAUBUNG	247009702	711	1	435	11 26 260 6	WINDE 1 HYDR
VERSCHRAUBUNG	247009702	711	1	441	11 26 261 1	WINDE 2 HYDR
VERSCHRAUBUNG	247009702	610	3	453	10 51 826 1	ANLENKSTUECK HYDR
VERSCHRAUBUNG	247009702	42	1	604	11 29 444 5	HEIZUNG NRS
VERSCHRAUBUNG	247009702	604	1	608	10 51 726 2	VERROHRUNG HYDR
VERSCHRAUBUNG	247009702	701	1	662	11 89 408 3	VERROHRUNG HYDR
VERSCHRAUBUNG	247009902	675	5	14	11 29 618 6	OW HYDR
VERSCHRAUBUNG	247009902	610	7	76	11 24 773 5	AGGREGAT HYDR
VERSCHRAUBUNG	247009902	601	6	392	11 25 903 1	VERROHRUNG HYDR
VERSCHRAUBUNG	247010102	611	4	12	11 29 618 6	OW HYDR
VERSCHRAUBUNG	247010102	604	4	76	11 24 773 5	AGGREGAT HYDR
VERSCHRAUBUNG	247010102	609	2	453	10 51 826 1	ANLENKSTUECK HYDR
VERSCHRAUBUNG	247011602	610	1	12	11 29 618 6	OW HYDR
VERSCHRAUBUNG	247011602	307	1	76	11 24 773 5	AGGREGAT HYDR
VERSCHRAUBUNG	247011602	22	1	270	11 24 114 4	KRAFTSTOFFANLAGE
VERSCHRAUBUNG	247011602	613	2	394	11 25 903 1	VERROHRUNG HYDR
VERSCHRAUBUNG	247011602	603	1	453	10 51 826 1	ANLENKSTUECK HYDR
VERSCHRAUBUNG	247020902	654	3	14	11 29 618 6	OW HYDR
VERSCHRAUBUNG	247021802	24	3	275	11 24 114 5	ANLAGE HARNSTOFF EINBAU
VERSCHRAUBUNG	247027002	716	1	14	11 29 618 6	OW HYDR
VERSCHRAUBUNG	247027202	609	1	12	11 29 618 6	OW HYDR
VERSCHRAUBUNG	247027302	718	2	14	11 29 618 6	OW HYDR
VERSCHRAUBUNG	247027302	32	2	275	11 24 114 5	ANLAGE HARNSTOFF EINBAU
VERSCHRAUBUNG	247027302	602	4	392	11 25 903 1	VERROHRUNG HYDR
VERSCHRAUBUNG	247027402	606	1	453	10 51 826 1	ANLENKSTUECK HYDR
VERSCHRAUBUNG	247040302	680	1	14	11 29 618 6	OW HYDR
VERSCHRAUBUNG	247040302	605	1	312	10 51 969 8	NADELEINZIEHWINDE HYDR
VERSCHRAUBUNG	247040902	739	2	16	11 29 618 6	OW HYDR
VERSCHRAUBUNG	247040902	34	2	275	11 24 114 5	ANLAGE HARNSTOFF EINBAU
VERSCHRAUBUNG	247041102	203	1	12	11 29 618 6	OW HYDR
VERSCHRAUBUNG	247041102	608	3	76	11 24 773 5	AGGREGAT HYDR
VERSCHRAUBUNG	247041102	608	4	392	11 25 903 1	VERROHRUNG HYDR

Bezeichnung	Artikel	Pos.	Menge	Blatt	Baugruppe	Bezeichnung
VERSCHRAUBUNG	247041402	607	3	76	11 24 773 5	AGGREGAT HYDR
VERSCHRAUBUNG	247041502	749	2	16	11 29 618 6	OW HYDR
VERSCHRAUBUNG	247041502	30	2	275	11 24 114 5	ANLAGE HARNSTOFF EINBAU
VERSCHRAUBUNG	247042402	681	4	14	11 29 618 6	OW HYDR
VERSCHRAUBUNG	247042402	611	6	394	11 25 903 1	VERROHRUNG HYDR
VERSCHRAUBUNG	247042402	605	1	652	10 51 973 8	SELBSTVERLADESYSTEM H
VERSCHRAUBUNG	247042402	607	1	689	10 51 728 1	VERROHRUNG HYDR
VERSCHRAUBUNG	247042502	746	2	16	11 29 618 6	OW HYDR
VERSCHRAUBUNG	247042702	607	1	12	11 29 618 6	OW HYDR
VERSCHRAUBUNG	247042702	605	1	453	10 51 826 1	ANLENKSTUECK HYDR
VERSCHRAUBUNG	247042702	614	1	547	10 53 146 1	VERROHRUNG HYDR
VERSCHRAUBUNG	247043002	610	1	547	10 53 146 1	VERROHRUNG HYDR
VERSCHRAUBUNG	247043102	606	2	12	11 29 618 6	OW HYDR
VERSCHRAUBUNG	247043102	614	2	76	11 24 773 5	AGGREGAT HYDR
VERSCHRAUBUNG	247043102	23	2	270	11 24 114 4	KRAFTSTOFFANLAGE
VERSCHRAUBUNG	247043102	33	1	604	11 29 444 5	HEIZUNG NRS
VERSCHRAUBUNG	247043202	615	2	66	10 51 969 5	A-BOCK AUFRICHTZYL HYDR
VERSCHRAUBUNG	247043502	613	2	76	11 24 773 5	AGGREGAT HYDR
VERSCHRAUBUNG	247043702	609	1	547	10 53 146 1	VERROHRUNG HYDR
VERSCHRAUBUNG	247044302	652	2	76	11 24 773 5	AGGREGAT HYDR
VERSCHRAUBUNG	247048502	27	3	275	11 24 114 5	ANLAGE HARNSTOFF EINBAU
VERSCHRAUBUNG	247048702	603	1	547	10 53 146 1	VERROHRUNG HYDR
VERSCHRAUBUNG	247048702	38	1	604	11 29 444 5	HEIZUNG NRS
VERSCHRAUBUNG	247048802	625	6	12	11 29 618 6	OW HYDR
VERSCHRAUBUNG	247048802	613	2	453	10 51 826 1	ANLENKSTUECK HYDR
VERSCHRAUBUNG	247049002	618	1	12	11 29 618 6	OW HYDR
VERSCHRAUBUNG	247049002	33	2	275	11 24 114 5	ANLAGE HARNSTOFF EINBAU
VERSCHRAUBUNG	247049002	22	1	392	11 25 903 1	VERROHRUNG HYDR
VERSCHRAUBUNG	247049002	44	2	604	11 29 444 5	HEIZUNG NRS
VERSCHRAUBUNG	247049102	627	2	12	11 29 618 6	OW HYDR
VERSCHRAUBUNG	247049102	33	4	39	99 14 627 14	WARMWASSERHEIZUNG OW
VERSCHRAUBUNG	247049102	617	1	76	11 24 773 5	AGGREGAT HYDR
VERSCHRAUBUNG	247049102	204	2	453	10 51 826 1	ANLENKSTUECK HYDR
VERSCHRAUBUNG	247049202	631	1	14	11 29 618 6	OW HYDR
VERSCHRAUBUNG	247091002	302	1	75	11 24 773 5	AGGREGAT HYDR
VERSCHRAUBUNG	247105602	732	1	16	11 29 618 6	OW HYDR
VERSCHRAUBUNG	247108302	734	4	16	11 29 618 6	OW HYDR
VERSCHRAUBUNG	247108302	612	8	76	11 24 773 5	AGGREGAT HYDR
VERSCHRAUBUNG	247108302	24	4	270	11 24 114 4	KRAFTSTOFFANLAGE
VERSCHRAUBUNG	247108302	641	1	394	11 25 903 1	VERROHRUNG HYDR
VERSCHRAUBUNG	247112702	624	9	12	11 29 618 6	OW HYDR
VERSCHRAUBUNG	247112702	202	2	66	10 51 969 5	A-BOCK AUFRICHTZYL HYDR
VERSCHRAUBUNG	247112702	686	4	76	11 24 773 5	AGGREGAT HYDR
VERSCHRAUBUNG	247112702	603	2	344	10 55 216 1	VERROHRUNG HYDR
VERSCHRAUBUNG	247112702	201	2	453	10 51 826 1	ANLENKSTUECK HYDR
VERSCHRAUBUNG	247112702	706	2	645	10 51 971 2	SELBSTVERLADESYSTEM H
VERSCHRAUBUNG	247116402	605	3	12	11 29 618 6	OW HYDR
VERSCHRAUBUNG	247116402	607	6	453	10 51 826 1	ANLENKSTUECK HYDR
VERSCHRAUBUNG	247117302	752	15	16	11 29 618 6	OW HYDR
VERSCHRAUBUNG	247117302	616	1	66	10 51 969 5	A-BOCK AUFRICHTZYL HYDR
VERSCHRAUBUNG	247117302	628	1	76	11 24 773 5	AGGREGAT HYDR
VERSCHRAUBUNG	247117302	600	4	344	10 55 216 1	VERROHRUNG HYDR
VERSCHRAUBUNG	247117302	707	2	645	10 51 971 2	SELBSTVERLADESYSTEM H
VERSCHRAUBUNG	247117302	203	1	652	10 51 973 8	SELBSTVERLADESYSTEM H
VERSCHRAUBUNG	247117302	705	2	662	11 89 408 3	VERROHRUNG HYDR
VERSCHRAUBUNG	247117702	704	9	14	11 29 618 6	OW HYDR
VERSCHRAUBUNG	247117702	308	1	76	11 24 773 5	AGGREGAT HYDR
VERSCHRAUBUNG	247117702	35	1	254	11 24 114 0	KUEHLER EINBAU WASSER
VERSCHRAUBUNG	247117702	10	1	275	11 24 114 5	ANLAGE HARNSTOFF EINBAU
VERSCHRAUBUNG	247117702	204	4	344	10 55 216 1	VERROHRUNG HYDR

Bezeichnung	Artikel	Pos.	Menge	Blatt	Baugruppe	Bezeichnung
VERSCHRAUBUNG	247117702	632	1	394	11 25 903 1	VERROHRUNG HYDR
VERSCHRAUBUNG	247121102	727	1	16	11 29 618 6	OW HYDR
VERSCHRAUBUNG	247126202	735	5	16	11 29 618 6	OW HYDR
VERSCHRAUBUNG	247126202	641	5	76	11 24 773 5	AGGREGAT HYDR
VERSCHRAUBUNG	247126202	35	2	275	11 24 114 5	ANLAGE HARNSTOFF EINBAU
VERSCHRAUBUNG	247126202	610	3	394	11 25 903 1	VERROHRUNG HYDR
VERSCHRAUBUNG	247128402	626	8	12	11 29 618 6	OW HYDR
VERSCHRAUBUNG	247128402	627	6	76	11 24 773 5	AGGREGAT HYDR
VERSCHRAUBUNG	247128402	608	4	344	10 55 216 1	VERROHRUNG HYDR
VERSCHRAUBUNG	247128402	708	2	645	10 51 971 2	SELBSTVERLADESYSTEM H
VERSCHRAUBUNG	247128502	731	2	16	11 29 618 6	OW HYDR
VERSCHRAUBUNG	247128502	604	1	312	10 51 969 8	NADELEINZIEHWINDE HYDR
VERSCHRAUBUNG	247128502	605	4	392	11 25 903 1	VERROHRUNG HYDR
VERSCHRAUBUNG	247128502	614	1	608	10 51 726 2	VERROHRUNG HYDR
VERSCHRAUBUNG	247128602	653	4	14	11 29 618 6	OW HYDR
VERSCHRAUBUNG	247128602	625	1	76	11 24 773 5	AGGREGAT HYDR
VERSCHRAUBUNG	247128602	16	1	275	11 24 114 5	ANLAGE HARNSTOFF EINBAU
VERSCHRAUBUNG	247128602	605	1	321	10 51 968 7	HAUPT EZW HYDR
VERSCHRAUBUNG	247128602	602	1	344	10 55 216 1	VERROHRUNG HYDR
VERSCHRAUBUNG	247128602	648	2	394	11 25 903 1	VERROHRUNG HYDR
VERSCHRAUBUNG	247138602	729	3	16	11 29 618 6	OW HYDR
VERSCHRAUBUNG	247138602	692	1	76	11 24 773 5	AGGREGAT HYDR
VERSCHRAUBUNG	247138602	19	2	275	11 24 114 5	ANLAGE HARNSTOFF EINBAU
VERSCHRAUBUNG	247138602	609	4	392	11 25 903 1	VERROHRUNG HYDR
VERSCHRAUBUNG	247142002	653	2	76	11 24 773 5	AGGREGAT HYDR
VERSCHRAUBUNG	247232702	660	2	14	11 29 618 6	OW HYDR
VERSCHRAUBUNG	247242302	629	11	12	11 29 618 6	OW HYDR
VERSCHRAUBUNG	247242302	638	2	394	11 25 903 1	VERROHRUNG HYDR
VERSCHRAUBUNG	247242302	40	1	604	11 29 444 5	HEIZUNG NRS
VERSCHRAUBUNG	247261802	708	3	14	11 29 618 6	OW HYDR
VERSCHRAUBUNG	247261802	621	1	76	11 24 773 5	AGGREGAT HYDR
VERSCHRAUBUNG	470002414	700	1	445	91 90 239 14	LEITUNG HYDR
VERSCHRAUBUNG	470700714	611	1	547	10 53 146 1	VERROHRUNG HYDR
VERSCHRAUBUNG	470701414	691	1	76	11 24 773 5	AGGREGAT HYDR
VERSCHRAUBUNG	470905214	36	1	254	11 24 114 0	KUEHLER EINBAU WASSER
VERSCHRAUBUNG	470905714	37	3	254	11 24 114 0	KUEHLER EINBAU WASSER
VERSCHRAUBUNG	471004514	602	11	12	11 29 618 6	OW HYDR
VERSCHRAUBUNG	471004514	605	1	66	10 51 969 5	A-BOCK AUFRICHTZYL HYDR
VERSCHRAUBUNG	471004514	620	1	76	11 24 773 5	AGGREGAT HYDR
VERSCHRAUBUNG	471004514	617	6	394	11 25 903 1	VERROHRUNG HYDR
VERSCHRAUBUNG	471004514	703	2	645	10 51 971 2	SELBSTVERLADESYSTEM H
VERSCHRAUBUNG	471004514	611	1	652	10 51 973 8	SELBSTVERLADESYSTEM H
VERSCHRAUBUNG	471004514	605	2	689	10 51 728 1	VERROHRUNG HYDR
VERSCHRAUBUNG	471004614	619	2	76	11 24 773 5	AGGREGAT HYDR
VERSCHRAUBUNG	471004614	603	2	312	10 51 969 8	NADELEINZIEHWINDE HYDR
VERSCHRAUBUNG	471004614	607	2	321	10 51 968 7	HAUPT EZW HYDR
VERSCHRAUBUNG	471004614	618	2	394	11 25 903 1	VERROHRUNG HYDR
VERSCHRAUBUNG	471004614	708	1	435	11 26 260 6	WINDE 1 HYDR
VERSCHRAUBUNG	471004614	708	1	441	11 26 261 1	WINDE 2 HYDR
VERSCHRAUBUNG	471007014	706	4	14	11 29 618 6	OW HYDR
VERSCHRAUBUNG	471007014	619	1	344	10 55 216 1	VERROHRUNG HYDR
VERSCHRAUBUNG	471008014	677	3	76	11 24 773 5	AGGREGAT HYDR
VERSCHRAUBUNG	471008214	601	3	12	11 29 618 6	OW HYDR
VERSCHRAUBUNG	471008214	611	8	76	11 24 773 5	AGGREGAT HYDR
VERSCHRAUBUNG	471008214	612	8	394	11 25 903 1	VERROHRUNG HYDR
VERSCHRAUBUNG	471008214	709	1	435	11 26 260 6	WINDE 1 HYDR
VERSCHRAUBUNG	471008214	709	1	441	11 26 261 1	WINDE 2 HYDR
VERSCHRAUBUNG	471016401	590	2	78	11 24 682 0	VERTEILERGETRIEBE
VERSCHRAUBUNG	471030508	600	3	12	11 29 618 6	OW HYDR
VERSCHRAUBUNG	471030508	678	1	76	11 24 773 5	AGGREGAT HYDR

Bezeichnung	Artikel	Pos.	Menge	Blatt	Baugruppe	Bezeichnung
VERSCHRAUBUNG	471030608	603	12	12	11 29 618 6	OW HYDR
VERSCHRAUBUNG	471030608	614	1	66	10 51 969 5	A-BOCK AUFRICHTZYL HYDR
VERSCHRAUBUNG	471030608	637	2	394	11 25 903 1	VERROHRUNG HYDR
VERSCHRAUBUNG	471030708	737	1	16	11 29 618 6	OW HYDR
VERSCHRAUBUNG	471030708	710	1	435	11 26 260 6	WINDE 1 HYDR
VERSCHRAUBUNG	471030708	710	1	441	11 26 261 1	WINDE 2 HYDR
VERSCHRAUBUNG	471031108	672	1	76	11 24 773 5	AGGREGAT HYDR
VERSCHRAUBUNG	471031108	654	1	394	11 25 903 1	VERROHRUNG HYDR
VERSCHRAUBUNG	471031308	632	2	76	11 24 773 5	AGGREGAT HYDR
VERSCHRAUBUNG	471031308	616	2	394	11 25 903 1	VERROHRUNG HYDR
VERSCHRAUBUNG	471031508	631	3	76	11 24 773 5	AGGREGAT HYDR
VERSCHRAUBUNG	471031508	31	2	275	11 24 114 5	ANLAGE HARNSTOFF EINBAU
VERSCHRAUBUNG	471031808	680	2	76	11 24 773 5	AGGREGAT HYDR
VERSCHRAUBUNG	471032108	610	2	652	10 51 973 8	SELBSTVERLADESYSTEM H
VERSCHRAUBUNG	471032608	622	1	12	11 29 618 6	OW HYDR
VERSCHRAUBUNG	471032608	604	2	66	10 51 969 5	A-BOCK AUFRICHTZYL HYDR
VERSCHRAUBUNG	471032608	615	6	394	11 25 903 1	VERROHRUNG HYDR
VERSCHRAUBUNG	471032608	606	2	465	10 51 959 1	VERROHRUNG HYDR
VERSCHRAUBUNG	471032608	608	2	547	10 53 146 1	VERROHRUNG HYDR
VERSCHRAUBUNG	471032608	700	8	668	11 23 524 8	VERROHRUNG HYDR
VERSCHRAUBUNG	471032608	600	1	674	10 55 459 4	VERROHRUNG HYDR
VERSCHRAUBUNG	471032708	658	4	14	11 29 618 6	OW HYDR
VERSCHRAUBUNG	471032708	603	2	66	10 51 969 5	A-BOCK AUFRICHTZYL HYDR
VERSCHRAUBUNG	471032708	600	24	392	11 25 903 1	VERROHRUNG HYDR
VERSCHRAUBUNG	471032708	627	2	465	10 51 959 1	VERROHRUNG HYDR
VERSCHRAUBUNG	471032708	607	1	547	10 53 146 1	VERROHRUNG HYDR
VERSCHRAUBUNG	471032708	704	2	645	10 51 971 2	SELBSTVERLADESYSTEM H
VERSCHRAUBUNG	471032708	703	8	662	11 89 408 3	VERROHRUNG HYDR
VERSCHRAUBUNG	471032708	609	1	689	10 51 728 1	VERROHRUNG HYDR
VERSCHRAUBUNG	471032808	621	27	12	11 29 618 6	OW HYDR
VERSCHRAUBUNG	471032808	630	3	76	11 24 773 5	AGGREGAT HYDR
VERSCHRAUBUNG	471032808	602	3	312	10 51 969 8	NADELEINZIEHWINDE HYDR
VERSCHRAUBUNG	471032808	609	3	321	10 51 968 7	HAUPT EZW HYDR
VERSCHRAUBUNG	471032808	622	2	394	11 25 903 1	VERROHRUNG HYDR
VERSCHRAUBUNG	471032808	701	1	445	91 90 239 14	LEITUNG HYDR
VERSCHRAUBUNG	471032808	600	1	689	10 51 728 1	VERROHRUNG HYDR
VERSCHRAUBUNG	471032908	616	1	12	11 29 618 6	OW HYDR
VERSCHRAUBUNG	471033014	629	1	76	11 24 773 5	AGGREGAT HYDR
VERSCHRAUBUNG	471033014	601	1	312	10 51 969 8	NADELEINZIEHWINDE HYDR
VERSCHRAUBUNG	471033014	651	2	394	11 25 903 1	VERROHRUNG HYDR
VERSCHRAUBUNG	471033014	602	2	608	10 51 726 2	VERROHRUNG HYDR
VERSCHRAUBUNG	471033114	707	1	14	11 29 618 6	OW HYDR
VERSCHRAUBUNG	471033114	606	3	547	10 53 146 1	VERROHRUNG HYDR
VERSCHRAUBUNG	471033214	722	2	16	11 29 618 6	OW HYDR
VERSCHRAUBUNG	471033214	636	1	394	11 25 903 1	VERROHRUNG HYDR
VERSCHRAUBUNG	471033214	608	3	453	10 51 826 1	ANLENKSTUECK HYDR
VERSCHRAUBUNG	471033214	605	3	465	10 51 959 1	VERROHRUNG HYDR
VERSCHRAUBUNG	471033214	605	5	547	10 53 146 1	VERROHRUNG HYDR
VERSCHRAUBUNG	471033214	603	2	608	10 51 726 2	VERROHRUNG HYDR
VERSCHRAUBUNG	471033214	709	2	645	10 51 971 2	SELBSTVERLADESYSTEM H
VERSCHRAUBUNG	471033214	704	1	662	11 89 408 3	VERROHRUNG HYDR
VERSCHRAUBUNG	471033314	606	1	321	10 51 968 7	HAUPT EZW HYDR
VERSCHRAUBUNG	471033414	725	1	16	11 29 618 6	OW HYDR
VERSCHRAUBUNG	471033614	738	1	16	11 29 618 6	OW HYDR
VERSCHRAUBUNG	471033614	604	1	547	10 53 146 1	VERROHRUNG HYDR
VERSCHRAUBUNG	471034414	726	2	16	11 29 618 6	OW HYDR
VERSCHRAUBUNG	471034414	612	2	344	10 55 216 1	VERROHRUNG HYDR
VERSCHRAUBUNG	471034414	604	2	453	10 51 826 1	ANLENKSTUECK HYDR
VERSCHRAUBUNG	471034708	672	4	14	11 29 618 6	OW HYDR
VERSCHRAUBUNG	471034708	637	1	76	11 24 773 5	AGGREGAT HYDR

Bezeichnung	Artikel	Pos.	Menge	Blatt	Baugruppe	Bezeichnung
VERSCHRAUBUNG	471034714	25	2	270	11 24 114 4	KRAFTSTOFFANLAGE
VERSCHRAUBUNG	471034714	600	1	312	10 51 969 8	NADELEINZIEHWINDE HYDR
VERSCHRAUBUNG	471036014	652	2	394	11 25 903 1	VERROHRUNG HYDR
VERSCHRAUBUNG	471039408	612	1	321	10 51 968 7	HAUPT EZW HYDR
VERSCHRAUBUNG	471039408	611	2	344	10 55 216 1	VERROHRUNG HYDR
VERSCHRAUBUNG	471039708	618	2	344	10 55 216 1	VERROHRUNG HYDR
VERSCHRAUBUNG	471039708	600	1	608	10 51 726 2	VERROHRUNG HYDR
VERSCHRAUBUNG	471039908	635	3	76	11 24 773 5	AGGREGAT HYDR
VERSCHRAUBUNG	471039908	655	2	394	11 25 903 1	VERROHRUNG HYDR
VERSCHRAUBUNG	471100114	617	3	12	11 29 618 6	OW HYDR
VERSCHRAUBUNG	471100114	604	2	465	10 51 959 1	VERROHRUNG HYDR
VERSCHRAUBUNG	471100414	608	2	12	11 29 618 6	OW HYDR
VERSCHRAUBUNG	471100614	620	2	394	11 25 903 1	VERROHRUNG HYDR
VERSCHRAUBUNG	471100714	756	1	16	11 29 618 6	OW HYDR
VERSCHRAUBUNG	471100714	603	1	465	10 51 959 1	VERROHRUNG HYDR
VERSCHRAUBUNG	472531508	723	1	16	11 29 618 6	OW HYDR
VERSCHRAUBUNG	472531508	624	2	465	10 51 959 1	VERROHRUNG HYDR
VERSCHRAUBUNG	472531508	608	3	652	10 51 973 8	SELBSTVERLADESYSTEM H
VERSCHRAUBUNG	473210214	632	1	465	10 51 959 1	VERROHRUNG HYDR
VERSCHRAUBUNG	473210214	607	3	652	10 51 973 8	SELBSTVERLADESYSTEM H
VERSCHRAUBUNG	473210214	700	1	662	11 89 408 3	VERROHRUNG HYDR
VERSCHRAUBUNG	473231214	633	1	465	10 51 959 1	VERROHRUNG HYDR
VERSCHRAUBUNG	474001214	760	1	16	11 29 618 6	OW HYDR
VERSCHRAUBUNG	474002314	620	4	12	11 29 618 6	OW HYDR
VERSCHRAUBUNG	474002414	744	2	16	11 29 618 6	OW HYDR
VERSCHRAUBUNG	474002414	614	4	394	11 25 903 1	VERROHRUNG HYDR
VERSCHRAUBUNG	474032614	628	3	12	11 29 618 6	OW HYDR
VERSCHRAUBUNG	474032614	602	4	453	10 51 826 1	ANLENKSTUECK HYDR
VERSCHRAUBUNG	474032614	600	8	465	10 51 959 1	VERROHRUNG HYDR
VERSCHRAUBUNG	474032714	650	2	14	11 29 618 6	OW HYDR
VERSCHRAUBUNG	474032914	636	2	14	11 29 618 6	OW HYDR
VERSCHRAUBUNG	474033014	719	4	14	11 29 618 6	OW HYDR
VERSCHRAUBUNG	474033014	647	8	394	11 25 903 1	VERROHRUNG HYDR
VERSCHRAUBUNG	474033014	714	2	435	11 26 260 6	WINDE 1 HYDR
VERSCHRAUBUNG	474033014	714	2	441	11 26 261 1	WINDE 2 HYDR
VERSCHRAUBUNG	474033014	601	4	453	10 51 826 1	ANLENKSTUECK HYDR
VERSCHRAUBUNG	475002514	628	2	465	10 51 959 1	VERROHRUNG HYDR
VERSCHRAUBUNG	475033014	609	3	652	10 51 973 8	SELBSTVERLADESYSTEM H
VERSCHRAUBUNG	475033614	619	1	465	10 51 959 1	VERROHRUNG HYDR
VERSCHRAUBUNG	475501414	635	2	14	11 29 618 6	OW HYDR
VERSCHRAUBUNG	475501414	604	4	392	11 25 903 1	VERROHRUNG HYDR
VERSCHRAUBUNG	475501914	685	1	76	11 24 773 5	AGGREGAT HYDR
VERSCHRAUBUNG	475501914	606	1	652	10 51 973 8	SELBSTVERLADESYSTEM H
VERSCHRAUBUNG	475502514	625	4	394	11 25 903 1	VERROHRUNG HYDR
VERSCHRAUBUNG	476608008	39	1	254	11 24 114 0	KUEHLER EINBAU WASSER
VERSCHRAUBUNG	477102614	32	4	39	99 14 627 14	WARMWASSERHEIZUNG OW
VERSCHRAUBUNG	477102814	57	4	275	11 24 114 5	ANLAGE HARNSTOFF EINBAU
VERSCHRAUBUNG	477102814	39	2	604	11 29 444 5	HEIZUNG NRS
VERSCHRAUBUNG	477400314	690	2	76	11 24 773 5	AGGREGAT HYDR
VERSCHRAUBUNG	477400314	702	1	445	91 90 239 14	LEITUNG HYDR
VERSCHRAUBUNG	477400414	673	1	465	10 51 959 1	VERROHRUNG HYDR
VERSCHRAUBUNG	477400414	605	8	668	11 23 524 8	VERROHRUNG HYDR
VERSCHRAUBUNG	477400614	208	2	453	10 51 826 1	ANLENKSTUECK HYDR
VERSCHRAUBUNG	477400714	633	2	14	11 29 618 6	OW HYDR
VERSCHRAUBUNG	477400814	624	4	344	10 55 216 1	VERROHRUNG HYDR
VERSCHRAUBUNG	477401014	202	4	453	10 51 826 1	ANLENKSTUECK HYDR
VERSCHRAUBUNG	477700114	639	2	14	11 29 618 6	OW HYDR
VERSCHRAUBUNG	477700114	655	1	76	11 24 773 5	AGGREGAT HYDR
VERSCHRAUBUNG	477700114	614	2	453	10 51 826 1	ANLENKSTUECK HYDR
VERSCHRAUBUNG	477700214	619	1	12	11 29 618 6	OW HYDR

Bezeichnung	Artikel	Pos.	Menge	Blatt	Baugruppe	Bezeichnung
VERSCHRAUBUNG	477700214	23	1	392	11 25 903 1	VERROHRUNG HYDR
VERSCHRAUBUNG	477700414	689	2	76	11 24 773 5	AGGREGAT HYDR
VERSCHRAUBUNG	477700414	703	1	445	91 90 239 14	LEITUNG HYDR
VERSCHRAUBUNG	477700414	206	1	547	10 53 146 1	VERROHRUNG HYDR
VERSCHRAUBUNG	477700414	41	1	604	11 29 444 5	HEIZUNG NRS
VERSCHRAUBUNG	477700514	638	6	14	11 29 618 6	OW HYDR
VERSCHRAUBUNG	477700514	612	2	453	10 51 826 1	ANLENKSTUECK HYDR
VERSCHRAUBUNG	477700514	202	1	465	10 51 959 1	VERROHRUNG HYDR
VERSCHRAUBUNG	477700514	606	8	668	11 23 524 8	VERROHRUNG HYDR
VERSCHRAUBUNG	477700814	634	1	14	11 29 618 6	OW HYDR
VERSCHRAUBUNG	477701114	207	2	453	10 51 826 1	ANLENKSTUECK HYDR
VERSCHRAUBUNG	477701414	632	2	14	11 29 618 6	OW HYDR
VERSCHRAUBUNG	477701514	625	4	344	10 55 216 1	VERROHRUNG HYDR
VERSCHRAUBUNG	477701814	211	4	453	10 51 826 1	ANLENKSTUECK HYDR
VERSCHRAUBUNG	477704514	650	1	394	11 25 903 1	VERROHRUNG HYDR
VERSCHRAUBUNG	477704614	720	3	14	11 29 618 6	OW HYDR
VERSCHRAUBUNG	477704614	19	1	44	10 56 070 1	TANK HYDR KPL
VERSCHRAUBUNG	477704614	17	5	48	10 56 073 3	KRAFTSTOFFTANK KPL
VERSCHRAUBUNG	477704614	300	1	75	11 24 773 5	AGGREGAT HYDR
VERSCHRAUBUNG	477704914	306	1	76	11 24 773 5	AGGREGAT HYDR
VERSCHRAUBUNG	477704914	32	1	167	10 57 532 2	ANSAUGROHR OEL KPL
VERSCHRAUBUNG	477704914	38	4	254	11 24 114 0	KUEHLER EINBAU WASSER
VERSCHRAUBUNG	477704914	64	2	264	11 24 114 2	ANSAUGANLAGE LUFT
VERSCHRAUBUNG	477705114	202	1	321	10 51 968 7	HAUPT EZW HYDR
VERSCHRAUBUNG	477705214	58	1	275	11 24 114 5	ANLAGE HARNSTOFF EINBAU
VERSCHRAUBUNG	481930314	612	1	652	10 51 973 8	SELBSTVERLADESYSTEM H
VERSCHRAUBUNG	481930414	630	3	12	11 29 618 6	OW HYDR
VERSCHRAUBUNG	481930414	624	2	394	11 25 903 1	VERROHRUNG HYDR
VERSCHRAUBUNG	481930414	704	1	445	91 90 239 14	LEITUNG HYDR
VERSCHRAUBUNG	481930514	703	1	435	11 26 260 6	WINDE 1 HYDR
VERSCHRAUBUNG	481930514	703	1	441	11 26 261 1	WINDE 2 HYDR
VERSCHRAUBUNG	481930614	622	1	465	10 51 959 1	VERROHRUNG HYDR
VERSCHRAUBUNG	481930614	602	3	547	10 53 146 1	VERROHRUNG HYDR
VERSCHRAUBUNG	481930714	604	1	652	10 51 973 8	SELBSTVERLADESYSTEM H
VERSCHRAUBUNG	481930814	601	1	547	10 53 146 1	VERROHRUNG HYDR
VERSCHRAUBUNG	481931114	761	1	16	11 29 618 6	OW HYDR
VERSCHRAUBUNG	481931614	687	1	76	11 24 773 5	AGGREGAT HYDR
VERSCHRAUBUNG	481933014	623	4	394	11 25 903 1	VERROHRUNG HYDR
VERSCHRAUBUNG	482330814	730	1	16	11 29 618 6	OW HYDR
VERSCHRAUBUNG	482330814	675	1	76	11 24 773 5	AGGREGAT HYDR
VERSCHRAUBUNG	482331114	603	3	652	10 51 973 8	SELBSTVERLADESYSTEM H
VERSCHRAUBUNG	482331914	721	3	16	11 29 618 6	OW HYDR
VERSCHRAUBUNG	482331914	600	2	453	10 51 826 1	ANLENKSTUECK HYDR
VERSCHRAUBUNG	482430314	693	1	14	11 29 618 6	OW HYDR
VERSCHRAUBUNG	482430314	201	1	344	10 55 216 1	VERROHRUNG HYDR
VERSCHRAUBUNG	482430614	606	2	392	11 25 903 1	VERROHRUNG HYDR
VERSCHRAUBUNG	482431214	602	1	652	10 51 973 8	SELBSTVERLADESYSTEM H
VERSCHRAUBUNG	482431314	204	1	12	11 29 618 6	OW HYDR
VERSCHRAUBUNG	482431314	643	2	76	11 24 773 5	AGGREGAT HYDR
VERSCHRAUBUNG	482431314	705	1	435	11 26 260 6	WINDE 1 HYDR
VERSCHRAUBUNG	482431314	705	1	441	11 26 261 1	WINDE 2 HYDR
VERSCHRAUBUNG	482431414	706	1	435	11 26 260 6	WINDE 1 HYDR
VERSCHRAUBUNG	482431414	706	1	441	11 26 261 1	WINDE 2 HYDR
VERSCHRAUBUNG	482431514	671	1	465	10 51 959 1	VERROHRUNG HYDR
VERSCHRAUBUNG	482431714	623	4	344	10 55 216 1	VERROHRUNG HYDR
VERSCHRAUBUNG	482530814	755	2	16	11 29 618 6	OW HYDR
VERSCHRAUBUNG	482530814	660	1	76	11 24 773 5	AGGREGAT HYDR
VERSCHRAUBUNG	482530914	736	1	16	11 29 618 6	OW HYDR
VERSCHRAUBUNG	482530914	301	2	75	11 24 773 5	AGGREGAT HYDR
VERSCHRAUBUNG	482531614	615	1	12	11 29 618 6	OW HYDR

Bezeichnung	Artikel	Pos.	Menge	Blatt	Baugruppe	Bezeichnung
VERSCHRAUBUNG	482531814	652	2	14	11 29 618 6	OW HYDR
VERSCHRAUBUNG	482531814	649	4	394	11 25 903 1	VERROHRUNG HYDR
VERSCHRAUBUNG	485430714	748	1	16	11 29 618 6	OW HYDR
VERSCHRAUBUNG	485431214	714	2	14	11 29 618 6	OW HYDR
VERSCHRAUBUNG	485431214	683	3	76	11 24 773 5	AGGREGAT HYDR
VERSCHRAUBUNG	485431314	666	4	14	11 29 618 6	OW HYDR
VERSCHRAUBUNG	485431414	205	1	12	11 29 618 6	OW HYDR
VERSCHRAUBUNG	485432814	759	1	16	11 29 618 6	OW HYDR
VERSCHRAUBUNG	485432914	600	1	547	10 53 146 1	VERROHRUNG HYDR
VERSCHRAUBUNG	485433314	684	1	76	11 24 773 5	AGGREGAT HYDR
VERSCHRAUBUNG	485433314	713	2	435	11 26 260 6	WINDE 1 HYDR
VERSCHRAUBUNG	485433314	713	2	441	11 26 261 1	WINDE 2 HYDR
VERSCHRAUBUNG	485433314	613	8	465	10 51 959 1	VERROHRUNG HYDR
VERSCHRAUBUNG	485433314	615	2	608	10 51 726 2	VERROHRUNG HYDR
VERSCHRAUBUNG	485433314	710	2	645	10 51 971 2	SELBSTVERLADESYSTEM H
VERSCHRAUBUNG	485433414	758	1	16	11 29 618 6	OW HYDR
VERSCHRAUBUNG	485433414	705	1	445	91 90 239 14	LEITUNG HYDR
VERSCHRAUBUNG	485433414	629	2	465	10 51 959 1	VERROHRUNG HYDR
VERSCHRAUBUNG	485433414	612	2	547	10 53 146 1	VERROHRUNG HYDR
VERSCHRAUBUNG	485433514	610	1	66	10 51 969 5	A-BOCK AUFRICHTZYL HYDR
VERSCHRAUBUNG	485433514	630	1	465	10 51 959 1	VERROHRUNG HYDR
VERSCHRAUBUNG	485434214	747	1	16	11 29 618 6	OW HYDR
VERSCHRAUBUNG	485435014	651	2	14	11 29 618 6	OW HYDR
VERSCHRAUBUNG	485435714	713	1	14	11 29 618 6	OW HYDR
VERSCHRAUBUNG	485436414	629	2	394	11 25 903 1	VERROHRUNG HYDR
VERSCHRAUBUNG	485436414	43	1	604	11 29 444 5	HEIZUNG NRS
VERSCHRAUBUNG	485436414	617	1	608	10 51 726 2	VERROHRUNG HYDR
VERSCHRAUBUNG	491033414	601	1	652	10 51 973 8	SELBSTVERLADESYSTEM H
VERSCHRAUBUNG	491101214	757	1	16	11 29 618 6	OW HYDR
VERSCHRAUBUNG	4981232	1	2	219	10 14 179 0	ANSCHLUSSSTUECK VORM.
VERSCHRAUBUNG	4981235	3	1	184	10 14 591 9	OELMESSSTAB MIT ROHR
VERSCHRAUBUNG	4981235	10	1	236	10 14 013 6	ATL-ANBAU
VERSCHRAUBUNG	506801208	28	1	275	11 24 114 5	ANLAGE HARNSTOFF EINBAU
VERSCHRAUBUNG	510701214	745	1	16	11 29 618 6	OW HYDR
VERSCHRAUBUNG	510701314	677	2	14	11 29 618 6	OW HYDR
VERSCHRAUBUNG	510701914	711	2	14	11 29 618 6	OW HYDR
VERSCHRAUBUNG	510702014	742	1	16	11 29 618 6	OW HYDR
VERSCHRAUBUNG	510702414	712	1	14	11 29 618 6	OW HYDR
VERSCHRAUBUNG	510702414	702	1	435	11 26 260 6	WINDE 1 HYDR
VERSCHRAUBUNG	510703914	740	1	16	11 29 618 6	OW HYDR
VERSCHRAUBUNG	510704614	664	1	14	11 29 618 6	OW HYDR
VERSCHRAUBUNG	510709114	600	1	652	10 51 973 8	SELBSTVERLADESYSTEM H
VERSCHRAUBUNG	510709214	679	1	76	11 24 773 5	AGGREGAT HYDR
VERSCHRAUBUNG	592286514	36	1	366	10 35 250 8	KABINE
VERSCHRAUBUNG	592286514	11	5	370	10 50 133 3	SCHIEBETUER
VERSCHRAUBUNG	7027665	10	1	186	10 14 671 6	OELLEITUNG VORM.
VERSCHRAUBUNG	7365616	653	2	394	11 25 903 1	VERROHRUNG HYDR
VERSCHRAUBUNG	7367776	613	12	12	11 29 618 6	OW HYDR
VERSCHRAUBUNG	7367776	603	4	76	11 24 773 5	AGGREGAT HYDR
VERSCHRAUBUNG	7367776	610	1	312	10 51 969 8	NADELEINZIEHWINDE HYDR
VERSCHRAUBUNG	7367776	611	1	321	10 51 968 7	HAUPT EZW HYDR
VERSCHRAUBUNG	7367776	621	4	394	11 25 903 1	VERROHRUNG HYDR
VERSCHRAUBUNG	7367776	704	1	435	11 26 260 6	WINDE 1 HYDR
VERSCHRAUBUNG	7367776	704	1	441	11 26 261 1	WINDE 2 HYDR
VERSCHRAUBUNG	7367776	614	1	465	10 51 959 1	VERROHRUNG HYDR
VERSCHRAUBUNG	7367986	670	3	14	11 29 618 6	OW HYDR
VERSCHRAUBUNG	7403569	202	3	344	10 55 216 1	VERROHRUNG HYDR
VERSCHRAUBUNG	7407098	608	8	465	10 51 959 1	VERROHRUNG HYDR
VERSCHRAUBUNG	7407098	616	2	608	10 51 726 2	VERROHRUNG HYDR
VERSCHRAUBUNG	7407108	305	1	76	11 24 773 5	AGGREGAT HYDR

Bezeichnung	Artikel	Pos.	Menge	Blatt	Baugruppe	Bezeichnung
VERSCHRAUBUNG	7407108	603	1	321	10 51 968 7	HAUPT EZW HYDR
VERSCHRAUBUNG	7407108	707	1	435	11 26 260 6	WINDE 1 HYDR
VERSCHRAUBUNG	7407108	707	1	441	11 26 261 1	WINDE 2 HYDR
VERSCHRAUBUNG	7410455	640	2	14	11 29 618 6	OW HYDR
VERSCHRAUBUNG	7410455	643	8	394	11 25 903 1	VERROHRUNG HYDR
VERSCHRAUBUNG	7617268	703	13	14	11 29 618 6	OW HYDR
VERSCHRAUBUNG	7617268	612	1	66	10 51 969 5	A-BOCK AUFRICHTZYL HYDR
VERSCHRAUBUNG	7617268	676	3	76	11 24 773 5	AGGREGAT HYDR
VERSCHRAUBUNG	7617268	613	1	321	10 51 968 7	HAUPT EZW HYDR
VERSCHRAUBUNG	7617268	628	6	394	11 25 903 1	VERROHRUNG HYDR
VERSCHRAUBUNG	7617268	602	3	689	10 51 728 1	VERROHRUNG HYDR
VERSCHRAUBUNG	7617354	611	1	66	10 51 969 5	A-BOCK AUFRICHTZYL HYDR
VERSCHRAUBUNG	7617354	634	11	394	11 25 903 1	VERROHRUNG HYDR
VERSCHRAUBUNG	7617354	611	7	465	10 51 959 1	VERROHRUNG HYDR
VERSCHRAUBUNG	7617354	702	4	645	10 51 971 2	SELBSTVERLADESYSTEM H
VERSCHRAUBUNG	7617354	601	1	674	10 55 459 4	VERROHRUNG HYDR
VERSCHRAUBUNG	7617354	608	1	689	10 51 728 1	VERROHRUNG HYDR
VERSCHRAUBUNG	7617460	705	1	14	11 29 618 6	OW HYDR
VERSCHRAUBUNG	7617460	613	1	66	10 51 969 5	A-BOCK AUFRICHTZYL HYDR
VERSCHRAUBUNG	7617460	635	2	394	11 25 903 1	VERROHRUNG HYDR
VERSCHRAUBUNG	7617460	626	2	465	10 51 959 1	VERROHRUNG HYDR
VERSCHRAUBUNG	7617460	613	2	547	10 53 146 1	VERROHRUNG HYDR
VERSCHRAUBUNG	7617461	673	3	14	11 29 618 6	OW HYDR
VERSCHRAUBUNG	7617461	600	1	66	10 51 969 5	A-BOCK AUFRICHTZYL HYDR
VERSCHRAUBUNG	7617461	633	3	394	11 25 903 1	VERROHRUNG HYDR
VERSCHRAUBUNG	7617461	623	2	465	10 51 959 1	VERROHRUNG HYDR
VERSCHRAUBUNG	7617461	700	2	645	10 51 971 2	SELBSTVERLADESYSTEM H
VERSCHRAUBUNG	7617494	678	2	14	11 29 618 6	OW HYDR
VERSCHRAUBUNG	7617494	303	1	75	11 24 773 5	AGGREGAT HYDR
VERSCHRAUBUNG	7622060	712	2	435	11 26 260 6	WINDE 1 HYDR
VERSCHRAUBUNG	7622060	712	2	441	11 26 261 1	WINDE 2 HYDR
VERSCHRAUBUNG	790259414	612	1	608	10 51 726 2	VERROHRUNG HYDR
VERSCHRAUBUNG	790453814	614	1	12	11 29 618 6	OW HYDR
VERSCHRAUBUNG	790453814	648	3	76	11 24 773 5	AGGREGAT HYDR
VERSCHRAUBUNG KPL	11253240	900	1	101	90 74 418	REGELVENTIL
VERSTAERKUNGSPLATTE	10350084	11	4	461	99 34 198 14	SCHILD LIEBHERR
VERSTELLKOLBEN	10287733	1	1	156	10 28 766 5	VERSTELLTEIL
VERSTELLTEIL	10287665	2	1	154	11 21 593 6	PUMPENELEMENT
VERSTELLUNG	11219905	2	1	79	10 53 430 7	V.PUMPE
VERSTELLUNG	11224738	2	1	397	51 24 059 14	V.MOTOR
VERTEILERBLOCK	10151825	5	1	216	10 14 333 9	KRAFTSTOFFLEITUNGEN
VERTEILERGETRIEBE	11246820	1	1	75	11 24 773 5	AGGREGAT HYDR
VERZURRUNG BALLAST	992980314	13	1	306	99 23 386 14	BALLASTGEWICHT ANORD
VERZURRUNG OW	991804114	13	1	387	10 51 969 6	VERBINDUNG OW UW
VIDEOUEBERWACHUNGSANL	10580647	11	1	682	11 89 400 8	VIDEOUEBERWACHUNGSANL
VIDEOUEBERWACHUNGSANL	11219907	702	1	4	01 38 281 14	LR 1300 SX
VIDEOUEBERWACHUNGSANL	11894008	704	1	4	01 38 281 14	LR 1300 SX
VIERKANTROHR	10557117	5	1	650	11 23 619 7	SELBSTVERLADESYSTEM NR
VIERKANTROHR	11278507	1	1	516	11 28 357 6	MONTAGETEILE
VIERLIPPENDICHTUNG	10099037	1	24	18	10 52 459 5	DS
VIERLIPPENDICHTUNG	11301682	2	10	18	10 52 459 5	DS
VORREIBER	10581486	15	1	294	10 57 940 0	TUER
VORSCHLAGHAMMER 5000G	885040114	13	1	444	10 56 183 8	WERKZEUG
VORWAHLUHR	6905461	20	1	602	11 26 652 6	STANDHEIZUNG EL NRS
WAELZLAGER	10522848	3	1	584	79 03 862 14	LASTHAKEN
WAELZLAGER	10573891	11	1	595	11 27 148 8	AUFHAENGUNG
WAELZLAGER	10574043	3	1	589	11 27 463 8	AUFHAENGUNG
WAERMETAUSCHER	10446225	14	1	75	11 24 773 5	AGGREGAT HYDR
WAERMETAUSCHER	10512662	40	1	378	59 22 930 14	KLIMAGERAET
WAERMETAUSCHER	11236707	1	1	700	11 21 750 0	VERFLUESSIGER

Bezeichnung	Artikel	Pos.	Menge	Blatt	Baugruppe	Bezeichnung
WAGENKASTEN KPL	7023347	4	1	691	99 21 973 14	FAHRERSITZ NRS
WARMWASSERHEIZUNG OW	991462714	13	1	6	11 24 047 9	OW KPL
WARNLICHT EL NRS	11215298	3	1	625	11 21 546 1	HELILEUCHTE NRS
WARTUNGSSCHALTER	11060522	20	1	264	11 24 114 2	ANSAUGANLAGE LUFT
WASSERHEIZGERAET	11080525	3	1	604	11 29 444 5	HEIZUNG NRS
WASSERPUMPE MIT BEFEST.	10142734	370	1	172	10 14 032 7	DIESELMOTOR
WASSERPUMPE VORM.	10150386	1	1	229	10 14 273 4	WASSERPUMPE MIT BEFEST.
WASSERSAMMELLEITUNG K	10146012	388	1	172	10 14 032 7	DIESELMOTOR
WASSERSONDE	10331335	13	1	273	10 30 300 7	KRAFTSTOFFVORFILTER
WASSERVENTIL	10584671	50	1	378	59 22 930 14	KLIMAGERAET
WASSERVENTIL	11082158	12	2	275	11 24 114 5	ANLAGE HARNSTOFF EINBAU
WASSERVENTIL	592293114	51	1	379	10 58 467 1	WASSERVENTIL
WASSERWAAGE	714000808	5	1	384	97 07 857 03	LIBELLE EINBAU
WASSERWAAGE	714000808	12	1	665	11 89 568 6	SELBSTVERLADESYSTEM NR
WECHSELFILTER	10297295	1	2	205	10 14 294 2	SCHMIEROELFILTER ANBAU
WECHSELVENTIL	10124239	4	1	129	10 14 131 6	ANSCHLUSSPLATTE VORM.
WECHSELVENTIL	10446566	14	1	399	11 22 473 8	VERSTELLUNG
WECHSELVENTIL	11067305	6	1	84	11 21 991 0	PUMPENGEHAEUSE
WECHSELVENTIL	11267447	1	1	90	11 06 730 5	WECHSELVENTIL
WECHSELVENTIL	511491914	7	2	8	11 29 618 6	OW HYDR
WECHSELVENTIL	511491914	11	2	392	11 25 903 1	VERROHRUNG HYDR
WECHSLERRELAIS	630121508	83	1	354	10 55 963 5	SCHALTSCHR X1
WEGESCHIEBER	10224607	2	1	662	11 89 408 3	VERROHRUNG HYDR
WEGESCHIEBER	510403414	14	4	392	11 25 903 1	VERROHRUNG HYDR
WEGEVENTIL	10540182	230	1	346	51 14 347 14	DW SICHERUNGSBLOCK
WEGEVENTIL	10591435	8	1	17	10 35 148 6	VENTILBLOCK
WEGEVENTIL	11223305	2	2	21	59 21 458 14	VENTILBLOCK
WEGEVENTIL	11229184	7	1	17	10 35 148 6	VENTILBLOCK
WEGEVENTIL	11233727	1	1	68	10 22 540 8	VENTILBLOCK
WEGEVENTIL	11286481	2	2	8	11 29 618 6	OW HYDR
WEGEVENTIL	510427214	6	2	17	10 35 148 6	VENTILBLOCK
WEGEVENTIL	510427214	5	1	608	10 51 726 2	VERROHRUNG HYDR
WEGEVENTIL	510429214	4	1	465	10 51 959 1	VERROHRUNG HYDR
WEGEVENTIL	511432714	11	5	8	11 29 618 6	OW HYDR
WEGEVENTIL	511432714	4	1	312	10 51 969 8	NADELEINZIEHWINDE HYDR
WEGEVENTIL	511432714	3	1	321	10 51 968 7	HAUPT EZW HYDR
WEGEVENTIL	511480614	2	1	674	10 55 459 4	VERROHRUNG HYDR
WEGFAHRSPERRE	10663904	32	1	362	11 26 095 7	STEUERSTAND RE
WELLE	540272014	30	1	615	54 02 703 14	FLANSCH KPL
WELLE	957511614	16	1	541	11 29 938 4	MONTAGETEILE
WELLE	957714914	13	1	533	11 29 426 7	MONTAGETEILE
WELLENDICHTRING	10564158	14	1	313	51 22 527 14	OELMOTOR
WELLENDICHTRING	710069514	20	1	144	11 22 127 4	PUMPENELEMENT
WELLENDICHTRING	710069514	20	1	151	10 35 161 0	DS KPL
WELLENDICHTRING	790246414	20	1	154	11 21 593 6	PUMPENELEMENT
WELLENDICHTRING	790295314	53	1	339	99 04 645 14	ANTRIEB
WELLENDICHTRING	790563914	10	1	397	51 24 059 14	V.MOTOR
WELLROHR	10227531	71	6	276	11 24 114 5	ANLAGE HARNSTOFF EINBAU
WERKZEUG	10560228	1	1	444	10 56 183 8	WERKZEUG
WERKZEUG	10561838	1	1	443	10 56 187 5	WERKZEUGAUSRUESTUNG
WERKZEUGAUSRUESTUNG	10561875	50	1	2	01 38 281 14	LR 1300 SX
WERKZEUGKASTEN	790042514	2	1	444	10 56 183 8	WERKZEUG
WIEGE	11219922	2	1	80	11 21 990 2	TRIEBWERK
WINDE	10530398	10	1	424	11 22 050 0	WINDEN EINBAU
WINDE	10530398	10	1	439	11 22 050 1	WINDEN EINBAU
WINDE	10551563	10	1	320	10 51 968 6	EZW OW EINBAU KPL
WINDE	592069414	27	1	606	10 51 743 9	SEILEINZIEHWINDE KPL NRS
WINDE	969624801	10	1	311	10 51 969 7	NADELEINZIEHWINDE
WINDE 1 EL	11216342	3	1	423	11 26 260 5	WINDE 1 KRAN
WINDE 1 EL	11216342	3	1	438	11 26 261 0	WINDE 2 KRAN

Bezeichnung	Artikel	Pos.	Menge	Blatt	Baugruppe	Bezeichnung
WINDE 1 HYDR	11262606	2	1	423	11 26 260 5	WINDE 1 KRAN
WINDE 1 KRAN	11262605	41	1	2	01 38 281 14	LR 1300 SX
WINDE 2 HYDR	11262611	2	1	438	11 26 261 0	WINDE 2 KRAN
WINDE 2 KRAN	11262610	45	1	2	01 38 281 14	LR 1300 SX
WINDEN EINBAU	11220500	1	1	423	11 26 260 5	WINDE 1 KRAN
WINDEN EINBAU	11220501	1	1	438	11 26 261 0	WINDE 2 KRAN
WINDENBOCK	11893215	5	1	425	10 53 039 8	WINDE
WINDENGLEICHLAUF EL NRS	971460103	651	1	4	01 38 281 14	LR 1300 SX
WINDENRAHMEN	918678214	29	1	606	10 51 743 9	SEILEINZIEHWINDE KPL NRS
WINDENRAHMEN	969654301	20	1	315	96 96 248 01	WINDE
WINDGEBER	692815514	31	1	517	97 07 204 03	WINDMESSER EL NRS
WINDMESSER EL NRS	970720403	970	1	514	99 06 461 14	WINDMESSER KPL
WINDMESSER KPL	990646114	13	1	509	11 24 132 4	AL KOPF KPL
WINDMESSER KPL	990646114	12	1	564	11 24 263 6	NADELKOPF KPL
WINKEL	10563082	25	1	282	11 24 409 0	VERKLEIDUNG OW EINBAU KP
WINKEL	10574364	18	2	288	11 24 409 1	VERKLEIDUNG
WINKEL	11244498	53	1	284	11 24 409 0	VERKLEIDUNG OW EINBAU KP
WINKEL	11263757	18	1	164	11 24 113 8	MOTORLAGER KPL
WINKEL	11290852	230	1	78	11 24 682 0	VERTEILERGETRIEBE
WINKEL	964450414	14	1	547	10 53 146 1	VERROHRUNG HYDR
WINKELANZEIGE	919058414	11	1	473	11 24 444 4	A-BOCK 1 KPL
WINKELGEBER	11286324	10	1	455	10 53 044 6	ANLENKSTUECK EL
WINKELGEBER	11286324	10	1	510	10 53 141 3	AL KOPF EL
WINKELGEBER	11286324	10	1	526	10 53 140 9	ANLENKSTUECK EL
WINKELGEBER	11286324	10	1	565	10 53 141 0	KOPF WIPPSPITZE EL
WINKELSTUECK	592287714	17	1	373	59 22 871 14	FRONTSCHEIBE KPL
WINKELSTUECK	7412268	37	2	28	11 24 519 0	OW EL
WINKELVERSCHRAUBUNG	11268711	610	1	78	11 24 682 0	VERTEILERGETRIEBE
WINKELVERSCHRAUBUNG	592317014	600	1	78	11 24 682 0	VERTEILERGETRIEBE
WIPPE SCHWK	10533999	12	2	64	10 51 969 4	A-BOCK AUFRICHTZYL EINBA
WISCHARM	592287914	19	1	373	59 22 871 14	FRONTSCHEIBE KPL
WISCHARM	592288814	46	1	366	10 35 250 8	KABINE
WISCHERBLATT	592288014	20	1	373	59 22 871 14	FRONTSCHEIBE KPL
WISCHERBLATT	592288914	47	1	366	10 35 250 8	KABINE
WISCHERMOTOR	592287614	16	1	373	59 22 871 14	FRONTSCHEIBE KPL
WISCHERMOTOR	592288714	45	1	366	10 35 250 8	KABINE
WP	10223446	19	1	290	10 57 883 5	TUER
WP	10223447	3	1	290	10 57 883 5	TUER
WP	10223448	11	1	290	10 57 883 5	TUER
WP	10223449	16	1	290	10 57 883 5	TUER
WP	10336682	4	1	282	11 24 409 0	VERKLEIDUNG OW EINBAU KP
WP	10351547	7	7	286	11 24 409 1	VERKLEIDUNG
WP	10351548	8	1	286	11 24 409 1	VERKLEIDUNG
WP	10537566	3	1	385	10 53 756 0	LEUCHTENHALTER KPL
WP	10572706	2	2	50	10 55 268 1	MITNEHMER EINBAU
WP	10573951	10	1	706	10 52 293 0	DW GEBER NRS
WP	10574631	2	1	433	10 57 462 9	BOLZEN KPL
WP	10575306	4	1	254	11 24 114 0	KUEHLER EINBAU WASSER
WP	10575307	5	1	254	11 24 114 0	KUEHLER EINBAU WASSER
WP	10575566	10	1	261	11 24 114 1	KUEHLER EINBAU LADELUFT
WP	10575567	11	1	261	11 24 114 1	KUEHLER EINBAU LADELUFT
WP	10577229	40	1	275	11 24 114 5	ANLAGE HARNSTOFF EINBAU
WP	10586253	50	1	58	10 58 163 4	KABINENAUFHAENGUNG KPL
WP	10599571	46	1	302	11 24 483 7	BEF-TEILE OW
WP	10599757	6	1	254	11 24 114 0	KUEHLER EINBAU WASSER
WP	10599758	7	1	254	11 24 114 0	KUEHLER EINBAU WASSER
WP	10599759	8	1	254	11 24 114 0	KUEHLER EINBAU WASSER
WP	10599854	49	1	302	11 24 483 7	BEF-TEILE OW
WP	11223086	1	1	599	11 22 322 6	MODEM KPL NRS
WP	11245760	4	4	624	11 24 575 5	PODEST

Bezeichnung	Artikel	Pos.	Menge	Blatt	Baugruppe	Bezeichnung
WP	11248432	10	1	268	11 24 114 3	ABGASANLAGE
WP	11248433	11	1	268	11 24 114 3	ABGASANLAGE
WP	11250985	3	1	262	11 28 574 7	WP
WP	11261002	5	2	169	11 24 113 9	MOTORVORMONTAGE
WP	11270062	15	1	604	11 29 444 5	HEIZUNG NRS
WP	11271007	6	1	604	11 29 444 5	HEIZUNG NRS
WP	11279013	43	1	275	11 24 114 5	ANLAGE HARNSTOFF EINBAU
WP	11285709	4	1	262	11 28 574 7	WP
WP	11285747	3	1	261	11 24 114 1	KUEHLER EINBAU LADELUFT
WP	11309628	2	1	386	11 30 962 5	HALTER KPL
WP	289059414	13	1	389	11 23 547 8	UW KPL
WP	385031714	15	2	606	10 51 743 9	SEILEINZIEHWINDE KPL NRS
WP	949892214	20	1	320	10 51 968 6	EZW OW EINBAU KPL
WP	953431803	3	2	635	95 34 317 03	KABELHALTER NRS
WP	953431903	2	4	635	95 34 317 03	KABELHALTER NRS
WP	953432003	1	1	635	95 34 317 03	KABELHALTER NRS
WP	954229003	101	1	304	11 24 483 7	BEF-TEILE OW
WP	954373603	31	2	408	10 55 876 0	RAUPENTRAEGER RE KPL
WP	954373603	31	2	417	10 55 876 1	RAUPENTRAEGER LI KPL
WP	956033214	3	2	513	11 28 610 5	ARRETIERUNG KPL
WP	956067414	5	2	577	99 48 521 14	SPITZEN AL KPL
WP	956319314	30	4	577	99 48 521 14	SPITZEN AL KPL
WP	956810314	26	1	521	99 23 398 14	ROLLENSATZ
WP	957104314	38	1	633	10 51 176 9	ZWISCHENHUB NADEL AL KP
WP	959332514	90	1	451	11 23 820 3	ANLENKSTUECK KPL
WP	970831503	14	2	450	11 23 820 3	ANLENKSTUECK KPL
WP	970854303	16	2	512	11 28 629 9	MONTAGETEILE
WP	970854303	53	2	525	11 24 336 5	ANLENKSTUECK NADEL KPL
WP	971323803	28	1	637	99 10 116 14	SEILFUEHRUNG
WP	971508203	10	1	574	10 55 753 7	SPITZENENDSCHALTER LI EIN
WP	971508203	11	1	577	99 48 521 14	SPITZEN AL KPL
WP	971508203	43	1	633	10 51 176 9	ZWISCHENHUB NADEL AL KP
WP	971511703	10	1	575	10 55 757 6	SPITZENENDSCHALTER RE E
ZAHNRAD	10121982	5	1	204	10 13 382 3	ABSAUGPUMPE VORM.
ZAHNRAD	10121983	4	1	204	10 13 382 3	ABSAUGPUMPE VORM.
ZAHNRAD	10133684	6	1	204	10 13 382 3	ABSAUGPUMPE VORM.
ZAHNRADPUMPE	512214414	10	1	75	11 24 773 5	AGGREGAT HYDR
ZAHNRADPUMPE	512249914	7	1	75	11 24 773 5	AGGREGAT HYDR
ZAHNWELLE	790346614	120	1	78	11 24 682 0	VERTEILERGETRIEBE
ZEITRELAIS	630170014	85	1	354	10 55 963 5	SCHALTSCHR X1
ZEITRELAIS	630170014	32	1	708	10 56 013 7	FREMDEINSPEISUNG BATTERI
ZELLGUMMI	262107814	24	6	60	10 56 067 3	BATTERIE EINBAU KPL
ZENTRALAGGREGAT	11240480	10	1	71	11 26 560 6	AGGREGAT DIESELMOTOR
ZENTRALAGGREGAT EL	11244487	3	1	73	11 24 048 0	ZENTRALAGGREGAT
ZENTRALBALLAST KPL	11248120	37	1	2	01 38 281 14	LR 1300 SX
ZENTRALBALLAST SCHWK	11242597	10	4	420	11 24 812 0	ZENTRALBALLAST KPL
ZENTRALSCHMIERPUMPE	11223123	12	1	52	11 27 315 5	ZENTRALSCHMIERUNG
ZENTRALSCHMIERUNG	11273155	23	1	6	11 24 047 9	OW KPL
ZENTRALSCHMIERUNG NRS	11284236	821	1	4	01 38 281 14	LR 1300 SX
ZUENDSTARTSCHALTER	740732003	31	1	362	11 26 095 7	STEUERSTAND RE
ZUGBLECH	950735414	13	2	582	99 38 329 14	SPITZEN AL KPL
ZUGBLECH	950735714	40	2	582	99 38 329 14	SPITZEN AL KPL
ZUGFEDER	7617520	51	2	382	10 28 999 3	SCHWINGSYSTEM
ZUGSTANGE	540272114	31	1	615	54 02 703 14	FLANSCH KPL
ZURRGURT	10020519	8	6	312	10 51 969 8	NADELEINZIEHWINDE HYDR
ZURRGURT	7621780	7	10	312	10 51 969 8	NADELEINZIEHWINDE HYDR
ZUSATZBALLAST	10349439	12	6	307	99 27 572 14	GRUNDPLATTE KPL
ZUSATZBALLAST	10349440	11	8	307	99 27 572 14	GRUNDPLATTE KPL
ZWEILOCHMUTTER AL	11005554	17	1	273	10 30 300 7	KRAFTSTOFFVORFILTER
ZWISCHENABSPANNUNG NR	970599703	619	1	3	01 38 281 14	LR 1300 SX

Bezeichnung	Artikel	Pos.	Menge	Blatt	Baugruppe	Bezeichnung
ZWISCHENABSPANNUNG NR	992340514	616	1	3	01 38 281 14	LR 1300 SX
ZWISCHENABSPANNUNG NR	992342014	617	1	3	01 38 281 14	LR 1300 SX
ZWISCHENFLANSCH SAE	510710614	10	4	392	11 25 903 1	VERROHRUNG HYDR
ZWISCHENHUB NADEL AL KP	10511769	600	1	3	01 38 281 14	LR 1300 SX
ZWISCHENHUB NADEL AL SC	993118114	10	1	633	10 51 176 9	ZWISCHENHUB NADEL AL KP
ZWISCHENPLATTE	511495814	20	1	8	11 29 618 6	OW HYDR
ZWISCHENRAD KPL	9072906	331	1	172	10 14 032 7	DIESELMOTOR
ZWISCHENRAD VORM.	9072633	14	1	204	10 13 382 3	ABSAUGPUMPE VORM.
ZWISCHENRAD VORM.	9072904	1	1	225	90 72 906	ZWISCHENRAD KPL
ZWISCHENRADACHSE	9072907	2	1	225	90 72 906	ZWISCHENRAD KPL
ZWISCHENSTUECK	10132935	16	1	217	10 14 588 5	LECKOELRUECKLAUF
ZWISCHENSTUECK	956009714	10	1	302	11 24 483 7	BEF-TEILE OW
ZWISCHENSTUECK	956009714	35	2	450	11 23 820 3	ANLENKSTUECK KPL
ZWISCHENSTUECK	956009714	11	2	484	11 28 725 5	SEILSCHUTZ KPL
ZWISCHENSTUECK MONTAGE	11240849	98	1	3	01 38 281 14	LR 1300 SX
ZWISCHENSTUECK MONTAGE	11241627	100	1	3	01 38 281 14	LR 1300 SX
ZWISCHENSTUECK MONTAGE	11241631	104	4	3	01 38 281 14	LR 1300 SX
ZWISCHENSTUECK MONTAGE	11245705	67	1	2	01 38 281 14	LR 1300 SX
ZWISCHENSTUECK MONTAGE	11245711	71	1	2	01 38 281 14	LR 1300 SX
ZWISCHENSTUECK MONTAGE	11245717	79	4	2	01 38 281 14	LR 1300 SX
ZWISCHENWELLE	944405903	70	1	412	96 93 178 01	FAHRANTRIEB
ZWOELFKANTSCHRAUBE M10	10132558	4	4	236	10 14 013 6	ATL-ANBAU
ZYL KOPF ANBAU	10131768	80	6	171	10 14 032 7	DIESELMOTOR
ZYL ROLLENLAGER	10573892	2	1	587	10 50 435 2	SEILROLLE
ZYL ROLLENLAGER	11490216	34	2	126	10 14 360 7	RS SCHWENKLAGER
ZYL ROLLENLAGER	746509414	2	1	638	91 49 419 14	SEILROLLE KPL
ZYL ROLLENLAGER	761001103	72	1	412	96 93 178 01	FAHRANTRIEB
ZYL ROLLENLAGER	7610021	12	1	412	96 93 178 01	FAHRANTRIEB
ZYL SCHLOSS	592289714	3	1	374	10 35 267 2	KLAPPE KPL
ZYL VERSCHLUSS	10542435	1	1	360	38 50 944 14	SCHALTERGEHAEUSE
ZYLINDER	10142758	40	6	171	10 14 032 7	DIESELMOTOR
ZYLINDER	10324901	1	1	147	11 49 032 3	ZYLINDER
ZYLINDER	11490323	1	1	146	10 32 489 2	TRIEBWERK
ZYLINDER	9075895	10	1	107	90 75 894	ZYLINDER MIT BUCHSE
ZYLINDER MIT BUCHSE	9075894	1	1	106	98 89 833	RS ZYLINDER+STEUERPLATT
ZYLINDERBUCHSE	10150966	1	1	187	10 14 275 8	ZYLINDER
ZYLINDERKOPF	10131623	1	1	193	10 13 728 5	ZYLINDERKOPF
ZYLINDERKOPF	10137285	1	1	192	10 13 728 6	ZYLINDERKOPF VORM.
ZYLINDERKOPF VORM.	10137286	1	1	191	10 13 176 8	ZYL KOPF ANBAU
ZYLINDERKOPFDECKEL	10134695	1	1	198	10 13 469 6	ZYLINDERKOPFDECKEL ANBA
ZYLINDERKOPFDECKEL	10134698	1	1	196	10 12 653 5	ZYLINDERKOPFDECKEL ANBA
ZYLINDERKOPFDECKEL	10134750	1	1	195	10 13 475 1	ZYLINDERKOPFDECKEL ANBA
ZYLINDERKOPFDECKEL ANBA	10126535	83	1	171	10 14 032 7	DIESELMOTOR
ZYLINDERKOPFDECKEL ANBA	10134696	84	2	171	10 14 032 7	DIESELMOTOR
ZYLINDERKOPFDECKEL ANBA	10134751	82	3	171	10 14 032 7	DIESELMOTOR
ZYLINDERKOPFDICHTUNG	10133667	2	1	191	10 13 176 8	ZYL KOPF ANBAU
ZYLINDERNADELLAGER	7469905	64	2	99	10 11 835 7	RS ANSCHLUSSGEHAEUSE
ZYLINDERNADELLAGER	7469905	32	1	111	98 84 402	RS WELLE
ZYLINDERROLLENLAGER	7380070	33	1	124	10 13 802 7	RS WELLE
ZYLINDERROLLENLAGER	7380106	33	1	111	98 84 402	RS WELLE
ZYLINDERSCHRAUBE	11215951	3	4	148	10 35 160 3	STEUERVENTIL
ZYLINDERSCHRAUBE	11215951	3	4	157	10 11 497 5	STEUERVENTIL
ZYLINDERSCHRAUBE	11217079	5	3	82	11 21 992 7	DECKEL
ZYLINDERSCHRAUBE	11217079	5	3	83	11 21 992 9	DECKEL
ZYLINDERSCHRAUBE	11219373	4	8	92	11 21 935 0	PUMPENDECKEL
ZYLINDERSCHRAUBE	11219936	11	8	94	11 21 991 8	LAGERFLANSCH
ZYLINDERSCHRAUBE	11220320	20	2	399	11 22 473 8	VERSTELLUNG
ZYLINDERSCHRAUBE	11220320	21	2	399	11 22 473 8	VERSTELLUNG
ZYLINDERSCHRAUBE	11224767	22	4	399	11 22 473 8	VERSTELLUNG
ZYLINDERSCHRAUBE DIN 691	4980750	46	1	104	10 13 975 2	RS SCHWENKJOCH

Bezeichnung	Artikel	Pos.	Menge	Blatt	Baugruppe	Bezeichnung
ZYLINDERSCHRAUBE DIN 69	407203008	65	4	167	10 57 532 2	ANSAUGROHR OEL KPL
ZYLINDERSCHRAUBE DIN 691	407201308	37	4	570	11 28 774 6	MONTAGETEILE
ZYLINDERSCHRAUBE DIN 79	4072083	61	32	44	10 56 070 1	TANK HYDR KPL
ZYLINDERSCHRAUBE DIN 798	408301208	7	8	365	11 22 369 1	FUSSPEDAL EL EINBAU
ZYLINDERSCHRAUBE DIN 912	11223234	20	8	339	99 04 645 14	ANTRIEB
ZYLINDERSCHRAUBE DIN 912	11226139	190	4	346	51 14 347 14	DW SICHERUNGSBLOCK
ZYLINDERSCHRAUBE DIN 912	10336668	8	30	408	10 55 876 0	RAUPENTRAEGER RE KPL
ZYLINDERSCHRAUBE DIN 912	10336668	8	30	417	10 55 876 1	RAUPENTRAEGER LI KPL
ZYLINDERSCHRAUBE DIN 912	11226137	180	4	346	51 14 347 14	DW SICHERUNGSBLOCK
ZYLINDERSCHRAUBE ISO 145	11600879	4	1	208	10 15 315 1	DRUCKROHRSTUTZEN
ZYLINDERSCHRAUBE ISO 145	11600879	3	1	209	10 14 114 0	RS DRUCKROHRSTUTZEN
ZYLINDERSCHRAUBE ISO 145	11600879	3	1	213	10 13 543 4	BEFESTIGUNG DRUCKROHR
ZYLINDERSCHRAUBE ISO 145	4981218	43	8	99	10 11 835 7	RS ANSCHLUSSGEHAEUSE
ZYLINDERSCHRAUBE ISO 145	4981218	43	4	106	98 89 833	RS ZYLINDER+STEUERPLATT
ZYLINDERSCHRAUBE ISO 145	4981218	43	4	110	98 89 832	RS ZYLINDER+STEUERPLATT
ZYLINDERSCHRAUBE ISO 145	11082116	3	1	207	10 15 286 7	INJEKTOR MIT BEFEST.
ZYLINDERSCHRAUBE ISO 145	11082116	2	1	212	10 13 543 2	BEFESTIGUNG INJEKTOR
ZYLINDERSCHRAUBE ISO 47	4002442	82	12	412	96 93 178 01	FAHRANTRIEB
ZYLINDERSCHRAUBE ISO 47	4002442	303	2	652	10 51 973 8	SELBSTVERLADESYSTEM H
ZYLINDERSCHRAUBE ISO 47	4043014	300	2	652	10 51 973 8	SELBSTVERLADESYSTEM H
ZYLINDERSCHRAUBE ISO 47	404208814	21	8	614	54 02 702 14	SEILTROMMEL KPL
ZYLINDERSCHRAUBE ISO 476	4043124	60	4	75	11 24 773 5	AGGREGAT HYDR
ZYLINDERSCHRAUBE ISO 476	4043124	17	12	412	96 93 178 01	FAHRANTRIEB
ZYLINDERSCHRAUBE ISO 47	404208514	430	58	78	11 24 682 0	VERTEILERGETRIEBE
ZYLINDERSCHRAUBE ISO 476	4900981	62	24	412	96 93 178 01	FAHRANTRIEB
ZYLINDERSCHRAUBE ISO 47	485558914	38	4	570	11 28 774 6	MONTAGETEILE
ZYLINDERSCHRAUBE ISO 476	4001622	61	12	169	11 24 113 9	MOTORVORMONTAGE
ZYLINDERSCHRAUBE ISO 476	4001622	3	4	206	10 15 360 6	RS ANTRIEB
ZYLINDERSCHRAUBE ISO 47	10539505	86	4	276	11 24 114 5	ANLAGE HARNSTOFF EINBAU
ZYLINDERSCHRAUBE ISO 47	10539505	15	8	308	10 52 656 0	MONTAGETEILE
ZYLINDERSCHRAUBE ISO 476	4630200	63	4	44	10 56 070 1	TANK HYDR KPL
ZYLINDERSCHRAUBE ISO 476	4630200	8	8	344	10 55 216 1	VERROHRUNG HYDR
ZYLINDERSCHRAUBE ISO 476	4630200	11	15	412	96 93 178 01	FAHRANTRIEB
ZYLINDERSCHRAUBE ISO 476	4043133	53	4	75	11 24 773 5	AGGREGAT HYDR
ZYLINDERSCHRAUBE ISO 476	4900980	302	2	652	10 51 973 8	SELBSTVERLADESYSTEM H
ZYLINDERSCHRAUBE ISO 47	10539508	22	6	614	54 02 702 14	SEILTROMMEL KPL
ZYLINDERSCHRAUBE ISO 47	4600385	62	8	168	10 58 017 0	RUECKLAUFROHR
ZYLINDERSCHRAUBE ISO 47	4600385	5	2	194	10 14 843 8	KIPPHEBELBOCK KPL.
ZYLINDERSCHRAUBE ISO 47	4600385	7	15	242	10 11 557 7	SCHWUNGRADGEHAEUSE AN
ZYLINDERSCHRAUBE ISO 47	404313401	58	4	10	11 29 618 6	OW HYDR
ZYLINDERSCHRAUBE ISO 476	10539530	22	12	339	99 04 645 14	ANTRIEB
ZYLINDERSCHRAUBE ISO 47	4980938	20	2	103	10 13 333 4	DECKEL
ZYLINDERSCHRAUBE ISO 476	4043163	21	8	95	10 11 834 9	DOPPELV.PUMPE
ZYLINDERSCHRAUBE ISO 476	4043163	20	2	137	10 12 987 4	DURCHTRIEB
ZYLINDERSCHRAUBE ISO 47	485555314	12	2	60	10 56 067 3	BATTERIE EINBAU KPL
ZYLINDERSCHRAUBE ISO 476	4043003	30	8	320	10 51 968 6	EZW OW EINBAU KPL
ZYLINDERSCHRAUBE ISO 476	4980012	6	2	242	10 11 557 7	SCHWUNGRADGEHAEUSE AN
ZYLINDERSCHRAUBE ISO 476	10012659	23	8	95	10 11 834 9	DOPPELV.PUMPE
ZYLINDERSCHRAUBE ISO 47	10539520	45	8	541	11 29 938 4	MONTAGETEILE
ZYLINDERSCHRAUBE ISO 476	4600505	57	16	10	11 29 618 6	OW HYDR
ZYLINDERSCHRAUBE ISO 47	10539524	29	1	58	10 58 163 4	KABINENAUFHAENGUNG KPL
ZYLINDERSCHRAUBE ISO 476	4600513	20	4	138	10 13 000 5	DURCHTRIEB
ZYLINDERSCHRAUBE ISO 476	4600513	20	4	139	10 13 235 7	ANBAUSATZ DURCHTRIEB
ZYLINDERSCHRAUBE ISO 476	4600513	20	4	140	10 13 452 1	DURCHTRIEB
ZYLINDERSCHRAUBE ISO 476	4600513	20	4	141	10 13 806 8	ANBAUSATZ DURCHTRIEB
ZYLINDERSCHRAUBE ISO 476	10544044	751	4	435	11 26 260 6	WINDE 1 HYDR
ZYLINDERSCHRAUBE ISO 476	10544050	18	16	392	11 25 903 1	VERROHRUNG HYDR
ZYLINDERSCHRAUBE ISO 476	10544065	26	8	58	10 58 163 4	KABINENAUFHAENGUNG KPL
ZYLINDERSCHRAUBE ISO 476	10544068	63	4	167	10 57 532 2	ANSAUGROHR OEL KPL
ZYLINDERSCHRAUBE ISO 47	10530200	440	12	78	11 24 682 0	VERTEILERGETRIEBE

Bezeichnung	Artikel	Pos.	Menge	Blatt	Baugruppe	Bezeichnung
ZYLINDERSCHRAUBE ISO 476	10017870	25	4	129	10 14 131 6	ANSCHLUSSPLATTE VORM.
ZYLINDERSCHRAUBE ISO 47	10544105	12	48	341	10 51 968 2	DW OW
ZYLINDERSCHRAUBE ISO 476	10544092	63	4	75	11 24 773 5	AGGREGAT HYDR
ZYLINDERSCHRAUBE ISO 476	10544093	62	4	75	11 24 773 5	AGGREGAT HYDR
ZYLINDERSCHRAUBE ISO 47	10544121	17	8	644	10 51 971 3	SELBSTVERLADESYSTEM NR
ZYLINDERSCHRAUBE ISO 476	10544113	16	8	644	10 51 971 3	SELBSTVERLADESYSTEM NR
ZYLINDERSCHRAUBE ISO 47	10228541	20	2	118	10 12 942 0	DRUCKREDUZIERVENTIL
ZYLINDERSCHRAUBE ISO 476	10539448	57	12	34	10 56 645 8	KLEMMKASTEN
ZYLINDERSCHRAUBE ISO 476	10278936	6	40	62	10 56 069 4	MODULE EINBAU
ZYLINDERSCHRAUBE ISO 47	404214114	10	4	61	11 31 093 2	ENDSCHALTER EINBAU
ZYLINDERSCHRAUBE ISO 476	10539454	26	4	512	11 28 629 9	MONTAGETEILE
ZYLINDERSCHRAUBE ISO 476	10539454	9	8	513	11 28 610 5	ARRETIERUNG KPL
ZYLINDERSCHRAUBE ISO 47	4600552	59	20	10	11 29 618 6	OW HYDR
ZYLINDERSCHRAUBE ISO 476	10539462	74	4	113	92 73 187	RS MAGNET
ZYLINDERSCHRAUBE ISO 47	404302914	6	4	312	10 51 969 8	NADELEINZIEHWINDE HYDR
ZYLINDERSCHRAUBE ISO 47	404302914	7	4	321	10 51 968 7	HAUPT EZW HYDR
ZYLINDERSCHRAUBE ISO 476	10539467	28	2	473	11 24 444 4	A-BOCK 1 KPL
ZYLINDERSCHRAUBE ISO 476	404203514	13	4	465	10 51 959 1	VERROHRUNG HYDR
ZYLINDERSCHRAUBE ISO 476	10446871	47	6	408	10 55 876 0	RAUPENTRAEGER RE KPL
ZYLINDERSCHRAUBE ISO 476	10446871	47	6	417	10 55 876 1	RAUPENTRAEGER LI KPL
ZYLINDERSCHRAUBE ISO 476	404250914	3	1	245	10 12 797 9	VERSCHLUSSTEILE
ZYLINDERSCHRAUBE ISO 476	404250914	3	1	251	10 13 307 7	DREHZAHLGEBER KPL.
ZYLINDERSCHRAUBE ISO 476	404250914	51	3	615	54 02 703 14	FLANSCH KPL
ZYLINDERSCHRAUBE ISO 476	404251014	60	3	254	11 24 114 0	KUEHLER EINBAU WASSER
ZYLINDERSCHRAUBE ISO 476	404251014	91	4	451	11 23 820 3	ANLENKSTUECK KPL
ZYLINDERSCHRAUBE ISO 476	404251014	40	4	525	11 24 336 5	ANLENKSTUECK NADEL KPL
ZYLINDERSCHRAUBE ISO 476	404251014	22	4	526	10 53 140 9	ANLENKSTUECK EL
ZYLINDERSCHRAUBE ISO 476	404251014	36	4	570	11 28 774 6	MONTAGETEILE
ZYLINDERSCHRAUBE ISO 476	404251414	61	6	254	11 24 114 0	KUEHLER EINBAU WASSER
ZYLINDERSCHRAUBE ISO 476	10219869	22	4	126	10 14 360 7	RS SCHWENKLAGER
ZYLINDERSCHRAUBE ISO 476	10539482	43	8	533	11 29 426 7	MONTAGETEILE
ZYLINDERSCHRAUBE ISO 476	10539482	36	8	541	11 29 938 4	MONTAGETEILE
ZYLINDERSCHRAUBE ISO 476	10539483	40	8	284	11 24 409 0	VERKLEIDUNG OW EINBAU KP
ZYLINDERSCHRAUBE ISO 476	10539483	9	4	363	91 65 251 14	KABELDURCHFUEHRUNG KAB
ZYLINDERSCHRAUBE ISO 47	4043082	14	2	236	10 14 013 6	ATL-ANBAU
ZYLINDERSCHRAUBE ISO 476	404206414	31	8	350	11 29 327 3	KABINE KPL
ZYLINDERSCHRAUBE ISO 476	485556314	23	4	614	54 02 702 14	SEILTROMMEL KPL
ZYLINDERSCHRAUBE ISO 476	404206614	2	1	206	10 15 360 6	RS ANTRIEB
ZYLINDERSCHRAUBE ISO 476	404206614	8	4	698	11 22 037 2	FUSSPEDAL EL EINBAU
ZYLINDERSCHRAUBE ISO 47	4980920	21	8	133	10 12 226 2	RS VERSTELLUNG
ZYLINDERSCHRAUBE ISO 47	4980840	20	4	101	90 74 418	REGELVENTIL
ZYLINDERSCHRAUBE ISO 476	10539485	18	6	617	54 02 705 14	ANTRIEB KPL
ZYLINDERSCHRAUBE ISO 476	10539486	50	1	615	54 02 703 14	FLANSCH KPL
ZYLINDERSCHRAUBE ISO 476	10539488	25	4	320	10 51 968 6	EZW OW EINBAU KPL
ZYLINDERSCHRAUBE ISO 47	11170484	26	2	129	10 14 131 6	ANSCHLUSSPLATTE VORM.
ZYLINDERSCHRAUBE ISO 47	11170484	26	2	135	10 13 803 4	DS ANSCHLUSSPLATTE
ZYLINDERSCHRAUBE ISO 476	10539492	23	2	485	11 28 390 8	AL BEGEHUNG
ZYLINDERSCHRAUBE ISO 476	10539492	23	2	499	11 28 583 8	AL BEGEHUNG
ZYLINDERSCHRAUBE ISO 476	10539492	23	2	505	11 28 626 1	AL BEGEHUNG
ZYLINDERSCHRAUBE ISO 476	10514797	17	6	617	54 02 705 14	ANTRIEB KPL
ZYLINDERSCHRAUBE ISO 47	404333614	61	12	75	11 24 773 5	AGGREGAT HYDR
ZYLINDERSCHRAUBE M10X30	10355735	27	4	154	11 21 593 6	PUMPENELEMENT
ZYLINDERSCHRAUBE M5X55	11219069	5	2	272	10 55 091 1	KRAFTSTOFFVORFILTER AN
ZYLINDERSCHRAUBE UN 120	10225045	4	4	31	10 53 048 9	SICHERUNGSHALTER
ZYLINDERSTIFT	10598777	23	2	399	11 22 473 8	VERSTELLUNG
ZYLINDERSTIFT 8M6X24 ST 2	10011777	9	2	204	10 13 382 3	ABSAUGPUMPE VORM.
ZYLINDERSTIFT ISO 2338 6X18	570948608	33	1	154	11 21 593 6	PUMPENELEMENT
ZYLINDERSTIFT ISO 8734 10M	4981077	22	2	121	10 12 224 8	RS ZUSATZTEILE
ZYLINDERSTIFT ISO 8734 4M6	4901104	8	1	204	10 13 382 3	ABSAUGPUMPE VORM.
ZYLINDERSTIFT ISO 8734 5M	4980046	44	2	99	10 11 835 7	RS ANSCHLUSSGEHAEUSE

Bezeichnung	Artikel	Pos.	Menge	Blatt	Baugruppe	Bezeichnung
ZYLINDERSTIFT ISO 8734 6M	4980000	3	1	203	10 13 394 7	ABSAUGPUMPE MIT BEFEST.