Spare parts catalogue

EN
DE

Type:

LR 1300 SX

Serial number:

138376

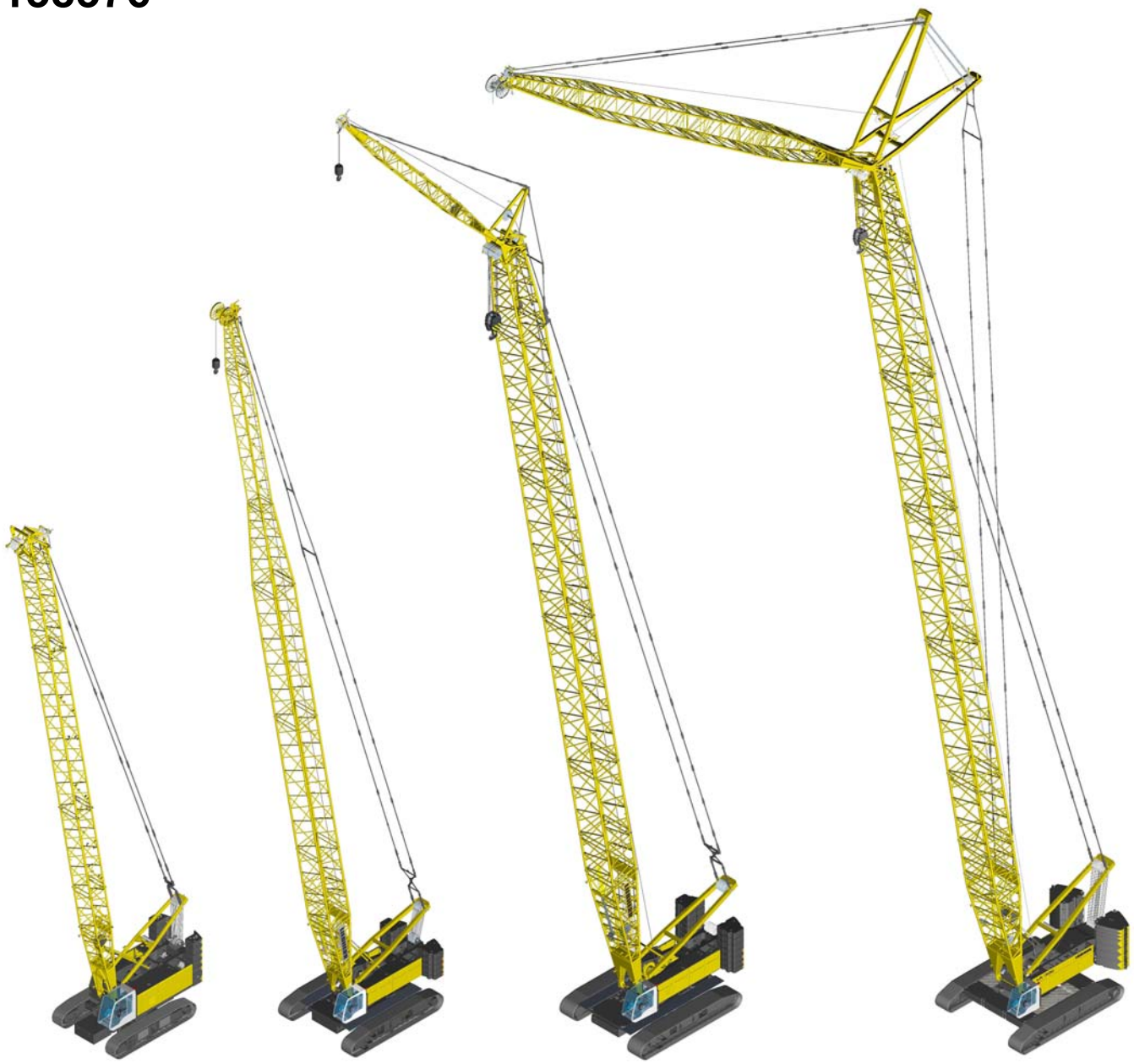

001 - 24.05.2017 / lwnkar1

LIEBHERR

USER GUIDE

Using the spare parts catalogue, it is possible to order spare parts by referencing the item number.

Spare parts catalogue layout

Customer-specific options are listed within the assembly listing in the last positions. Customer-specific options are so-called expansion kits and usually have the abbreviation NRS in the designation.

The assembly listing is located at the beginning of the spare parts catalogue and provides the machine serial number in the item number.

Spare parts sheet layout

1 Position number of the item in the illustration
2 Item number (order number)
3 Quantity
4 Spare part designation (original language)
5 Spare part designation (translation)
6 Specification of a serial number
up to serial number: -0815
from serial number: 0815-
7 Information on the spare part (not used)
8 Note on subordinate items, page number reference

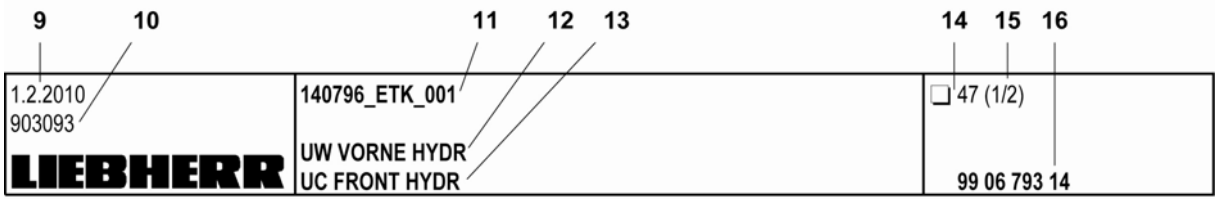

9 Printing date of the spare parts catalogue
10 Illustration number
11 Serial numbers for which this spare parts catalogue applies
12 Assembly designation (original language)
13 Assembly designation (translation)
14 Page number
15 Number of pages per assembly
16 Item number for the assembly
Example: 01 40 796 14 = Item number for the assembly listing

Searching for spare parts:

Searching using the assembly listing:

To find the desired spare part, you must navigate through the part list structure from beginning to end.
In doing so, first use the illustrations in the assembly listing as a guide.
The illustrations in the assembly listing provide a general idea of what is found in the list below the illustration.
Please note that certain assemblies and their spare parts may also be included in the conversion kits in the assembly listing.

Numerical index:

The numerical index is sorted by item number with reference to the page number, assembly, position and quantity.

Alphabetical index:

The alphabetical index is sorted by item designation with reference to item number, position, quantity, page number, assembly and assembly designation in which the item can be found.

Note on ordering

Before ordering, check whether the item number on the machine's type plate matches the number in your spare parts catalogue.

In order for us to be able to process your order quickly and correctly, please provide the following information with your order:

- Machine type and serial number (found on the machine's type plate)
- Item, designation and desired quantity
  For spare parts orders for drive motors, winches, hydraulic pumps, hydraulic motors, valves and cylinders, you must provide the serial number on the component's type plate.
- Delivery address and mode of dispatch

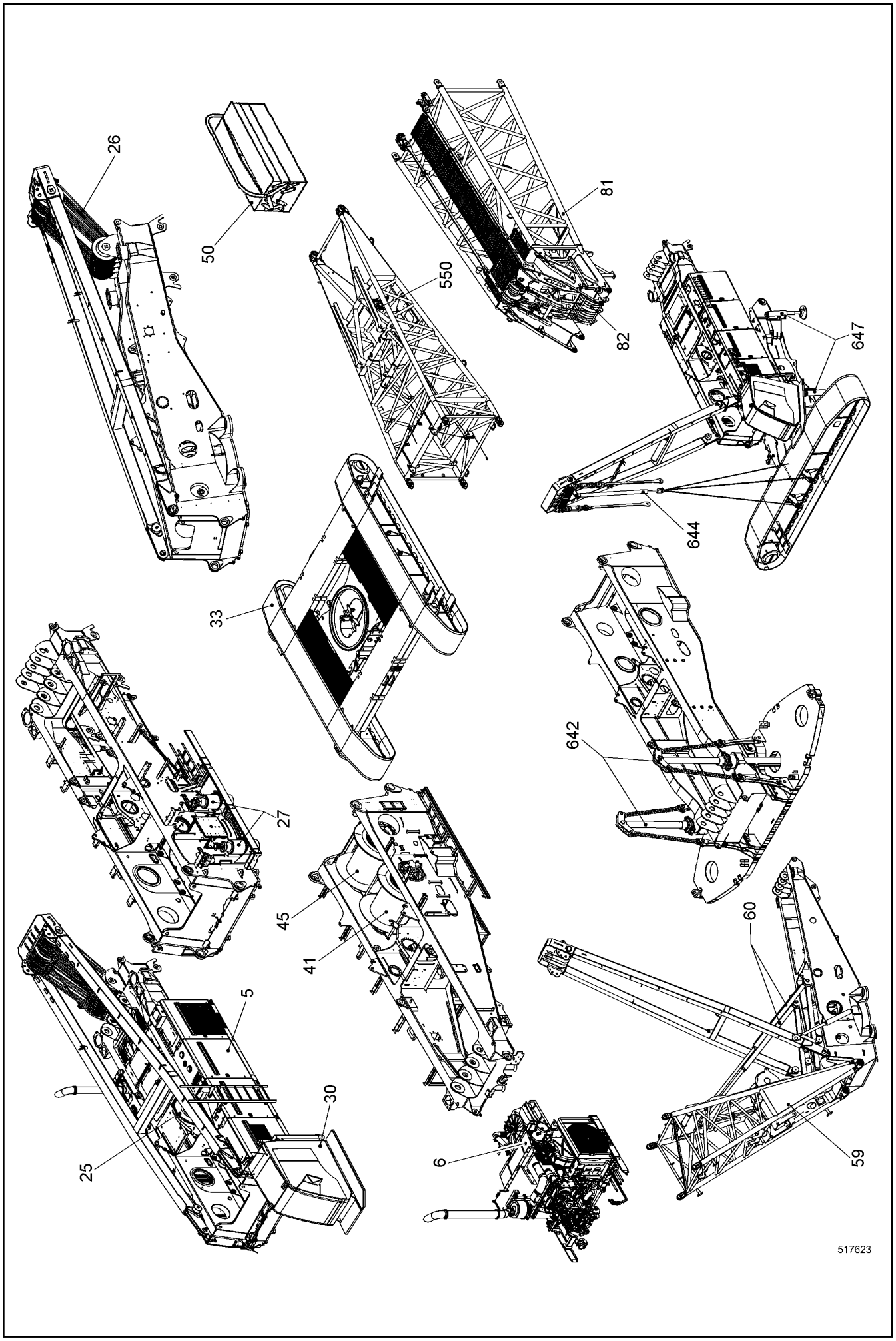
26
50
81
550
82
647
644
33
642
27
45
41
60
5
30
25
6
59
517623

Pos.	Item	Quantity	Description	Bezeichnung	Serie	K
4	11930457	1	MODIFICATION KIT RFK ⇨ ❑ 5	UMBAUSATZ NRS		
5	11240479	1	SUPERSTRUCTURE CPL ⇨ ❑ 17	OW KPL		
6	11265606	1	AGGREGATE DIESEL ENGINE ⇨ ❑ 90	AGGREGAT DIESELMOTOR		
8	10351188	2	INSCRIPTION	SCHRIFTZUG		
13	789011714	1	FIRST-AID KIT	VERBANDSKASSETTE		
14	10592569	1	RADIO RFK ⇨ ❑ 336	RADIO NRS		
15	10511274	1	DOUBLE T-MASTER SWITCH INSTAL. ⇨ ❑ 337	DOPPEL T-MEISTERSCH EINBAU		
18	992338614	1	COUNTERWEIGHT ARRANGEMENT ⇨ ❑ 338	BALLASTGEWICHT ANORD		
23	10519697	1	NEEDLE LUFFING WINCH ⇨ ❑ 342	NADELEINZIEHWINDE		
24	992338714	1	ROPES LUG NEEDLE BOOM ⇨ ❑ 358	BESEILUNG EZW NADEL AL		
25	10519691	1	LUG SUPERSTRUCTURE CPL ⇨ ❑ 359	EZW OW EINBAU KPL		
26	11227037	1	ROPES LUG MAIN BOOM ⇨ ❑ 381	BESEILUNG EZW HAUPT AL		
27	10519682	1	SG SUPERSTRUCTURE ⇨ ❑ 382	DW OW		
30	11279706	1	CABIN CPL ⇨ ❑ 401	KABINE KPL		
31	10519696	1	CONNECTION SUPERSTR UC ⇨ ❑ 441	VERBINDUNG OW UW		
33	11893648	1	UC CPL ⇨ ❑ 443	UW KPL		
37	11248120	1	CENTRAL COUNTERWEIGHT CPL ⇨ ❑ 481	ZENTRALBALLAST KPL		
38	992338914	1	UC PLATFORM ⇨ ❑ 482	UW PODEST		
41	11262605	1	WINCH 1 CRANE ⇨ ❑ 484	WINDE 1 KRAN		
45	11262610	1	WINCH 2 CRANE ⇨ ❑ 499	WINDE 2 KRAN		
50	10561875	1	TOOL EQUIPMENT ⇨ ❑ 504	WERKZEUGAUSRUESTUNG		
52	11898219	1	SIGN LOCATIONS	SCHILDER ANORD		
53	11276851	1	TYPE PLATE	TYPENSCHILD		
59	11238203	1	PIVOT PIECE CPL ⇨ ❑ 508	ANLENKSTUECK KPL		
60	11292598	1	TILT-BACK SUPPORT ⇨ ❑ 525	RUECKFALLSTUETZE		
63	11239378	1	A-FRAME 1 ASSEMBLY UNIT ⇨ ❑ 536	A-BOCK 1 MONTAGEEINHEIT		
65	11285947	1	SUPPORT CPL ⇨ ❑ 544	AUFLAGE KPL		
67	11245705	1	INTERMEDIATE PIECE ASSEMB UNIT ⇨ ❑ 547	ZWISCHENSTUECK MONTAGEEI		
69	11286191	1	SUPPORT CPL ⇨ ❑ 564	AUFLAGE KPL		
71	11245711	1	INTERMEDIATE PIECE ASSEMB UNIT ⇨ ❑ 565	ZWISCHENSTUECK MONTAGEEI		
77	11286534	4	SUPPORT CPL ⇨ ❑ 571	AUFLAGE KPL		
79	11245717	4	INTERMEDIATE PIECE ASSEMB UNIT ⇨ ❑ 572	ZWISCHENSTUECK MONTAGEEI		

Pos.	Item	Quantity	Description	Bezeichnung	Serie	K
81	11241324	1	BOOM HEAD CPL ⇨ ❑ 577	AL KOPF KPL		
82	992339814	1	ROLLER SET ⇨ ❑ 589	ROLLENSATZ		
115	994852114	1	TIP BOOM CPL ⇨ ❑ 592	SPITZEN AL KPL		
116	918907114	1	TIP BOOM MODIFICATION ⇨ ❑ 598	SPITZEN AL UMBAU		
121	790517214	1	ROPE LEFT	SEIL LI		
122	790517014	1	ROPE LEFT	SEIL LI		
129	790386214	1	LOAD HOOK ⇨ ❑ 599	LASTHAKEN		
133	790411214	1	BOTTOM HOOK BLOCK ⇨ ❑ 600	UNTERFLASCHE		
141	790520514	1	BOTTOM HOOK BLOCK ⇨ ❑ 607	UNTERFLASCHE		
401	10524422	1	SOFTWARE	SOFTWARE		
438	11907226	1	MODEM RFK ⇨ ❑ 613	MODEM NRS		
447	11250162	1	EMERGENCY OPERATION EL RFK ⇨ ❑ 615	NOTBETRIEB EL NRS		
510	11215524	1	ANGLE INDICATION RFK ⇨ ❑ 616	WINKELANZEIGE NRS		
550	10517439	1	ROPE LUG CPL RFK ⇨ ❑ 617	SEILEINZIEHWINDE KPL NRS		
553	10553721	1	ROOF RAILING RFK ⇨ ❑ 630	DACHGELAENDER NRS		
554	11241478	1	UC PLATFORM ⇨ ❑ 634	UW PODEST		
555	990870614	1	LADDER MOUNTING ⇨ ❑ 78	LEITER EINBAU		
580	11271097	1	LIGHTNING ROD RFK ⇨ ❑ 637	FANGSTANGE NRS		
583	11237407	1	ACCESS LADDER CPL RFK ⇨ ❑ 638	AUFSTIEGSLEITER KPL NRS		
605	991011614	1	ROPE GUIDE ⇨ ❑ 639	SEILFUEHRUNG		
616	992340514	1	INTERMEDIATE TENSIONING RFK ⇨ ❑ 641	ZWISCHENABSPANNUNG NRS		
617	992342014	1	INTERMEDIATE TENSIONING RFK ⇨ ❑ 643	ZWISCHENABSPANNUNG NRS		
619	970599703	1	INTERMEDIATE TENSIONING RFK ⇨ ❑ 645	ZWISCHENABSPANNUNG NRS		
620	10556010	1	FALL PROTECTION RFK ⇨ ❑ 646	STURZSICHERUNG NRS		
621	11294737	1	GANGWAY INTERM. SECTION RFK ⇨ ❑ 650	LAUFSTEG ZWISCHENSTUECK		
622	11294742	1	GANGWAY INTERM. SECTION RFK ⇨ ❑ 654	LAUFSTEG ZWISCHENSTUECK		
624	11294743	4	GANGWAY INTERM. SECTION RFK ⇨ ❑ 655	LAUFSTEG ZWISCHENSTUECK		
625	10555148	1	FALL PROTECTION RFK ⇨ ❑ 656	STURZSICHERUNG NRS		
626	10557224	1	FALL PROTECTION RFK ⇨ ❑ 658	STURZSICHERUNG NRS		
642	10519713	1	SELF-LOADING SYSTEM RFK ⇨ ❑ 660	SELBSTVERLADESYSTEM NRS		
644	11236197	1	SELF-LOADING SYSTEM RFK ⇨ ❑ 665	SELBSTVERLADESYSTEM NRS		

Pos.	Item	Quantity	Description	Bezeichnung	Serie	K
647	11242988	1	SELF-LOADING SYSTEM RFK ⇨ ❑ 675	SELBSTVERLADESYSTEM NRS		
650	10536350	1	SYNCHRONIZING HYDR RFK ⇨ ❑ 688	GLEICHLAUF HYDR NRS		
651	971460103	1	WINCH SYNCHRONIZATION EL RFK	WINDENGLEICHLAUF EL NRS		
680	11236266	2	ROPE MOUNTING RFK ⇨ ❑ 692	SEILHALTERUNG NRS		
704	11894008	1	VIDEO MONITORING SYSTEM RFK ⇨ ❑ 694	VIDEOUEBERWACHUNGSANLAG		
719	10517280	1	CABIN INCLINATION RFK ⇨ ❑ 701	KABINENNEIGUNG NRS		
723	11220372	1	FOOT PEDAL EL INSTALLATION ⇨ ❑ 704	FUSSPEDAL EL EINBAU		
724	11936212	1	AIR CONDITIONING UNIT RFK ⇨ ❑ 705	KLIMAANLAGE NRS		
828	10522930	1	SG TACHOGENERATOR RFK ⇨ ❑ 711	DW GEBER NRS		
854	11314462	1	SUCTION FLAP RFK ⇨ ❑ 713	ANSAUGKLAPPEN NRS		
858	10521554	1	REFUELLING SYSTEM RFK ⇨ ❑ 719	BETANKUNGSANLAGE NRS		
992	981953714	1	SOUND REDUCTION	SCHALLABNAHME		
999	981809914	1	KEY	SCHLUESSEL		

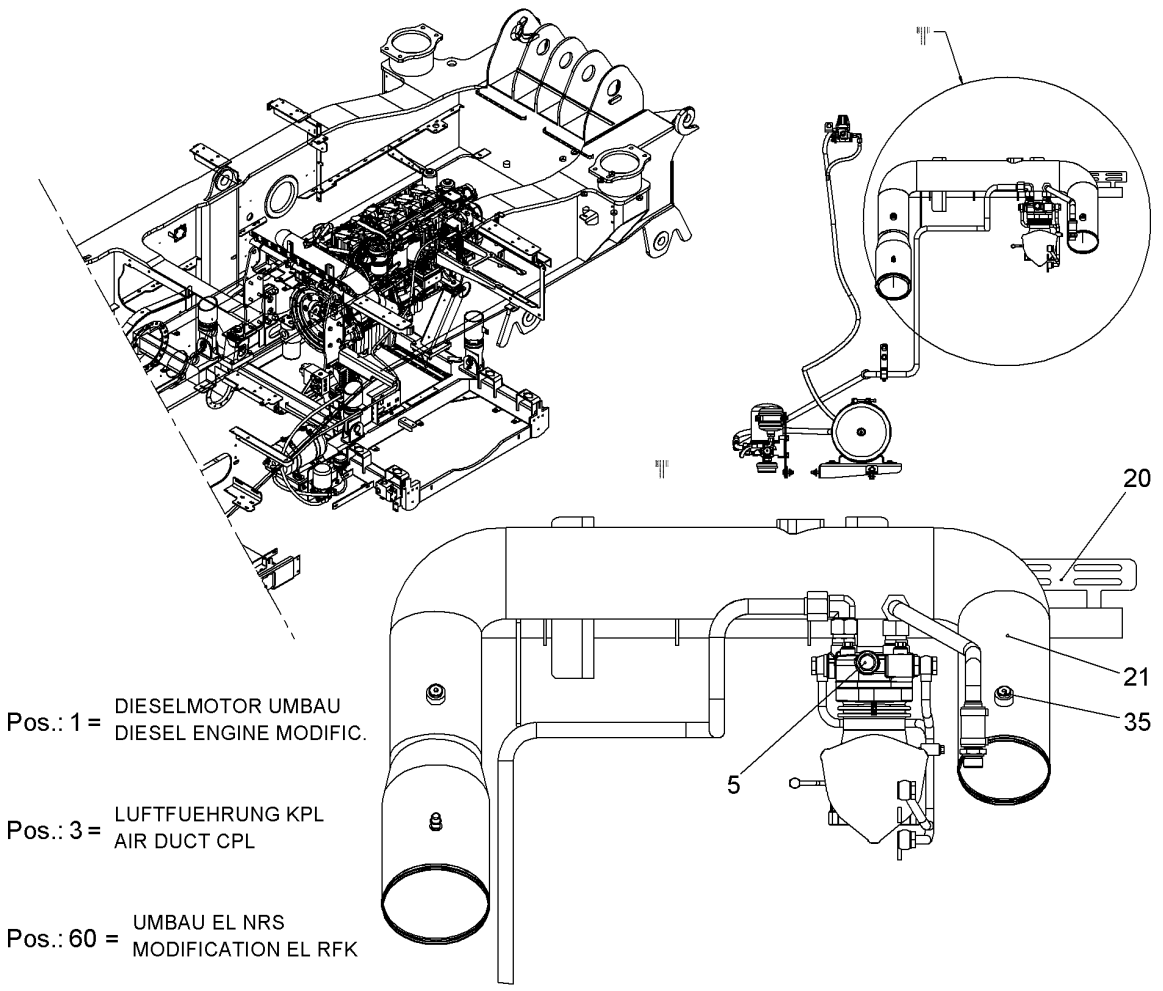

Pos.	Item	Quantity	Description	Bezeichnung	Serie	K
1	11930987	1	DIESEL ENGINE MODIFIC. ⇨ ❑ 6	DIESELMOTOR UMBAU		
3	11929588	1	AIR DUCT CPL ⇨ ❑ 7	LUFTFUEHRUNG KPL		
5	11928913	1	COMPRESSOR RFK ⇨ ❑ 11	KOMPRESSOR NRS		
20	11929329	1	HOLDER ST.CONST.	HALTER SCHWK		
21	11929287	1	SUCTION PIPE AIR	ANSAUGROHR LUFT		
35	477704914	2	FITTING	VERSCHRAUBUNG		
60	11931926	1	MODIFICATION EL RFK ⇨ ❑ 15	UMBAU EL NRS		

OHNE BILD
WITHOUT ILLUSTRATION
SANS PLANCHE
SIN FIG.
SEM ILUSTRAÇÃO
БЕЗ ИЗОБРАЖЕНИЯ

600000

Pos.	Item	Quantity	Description	Bezeichnung	Serie	K
2	12427052	1	CONVERSION KIT	UMRUESTSATZ		

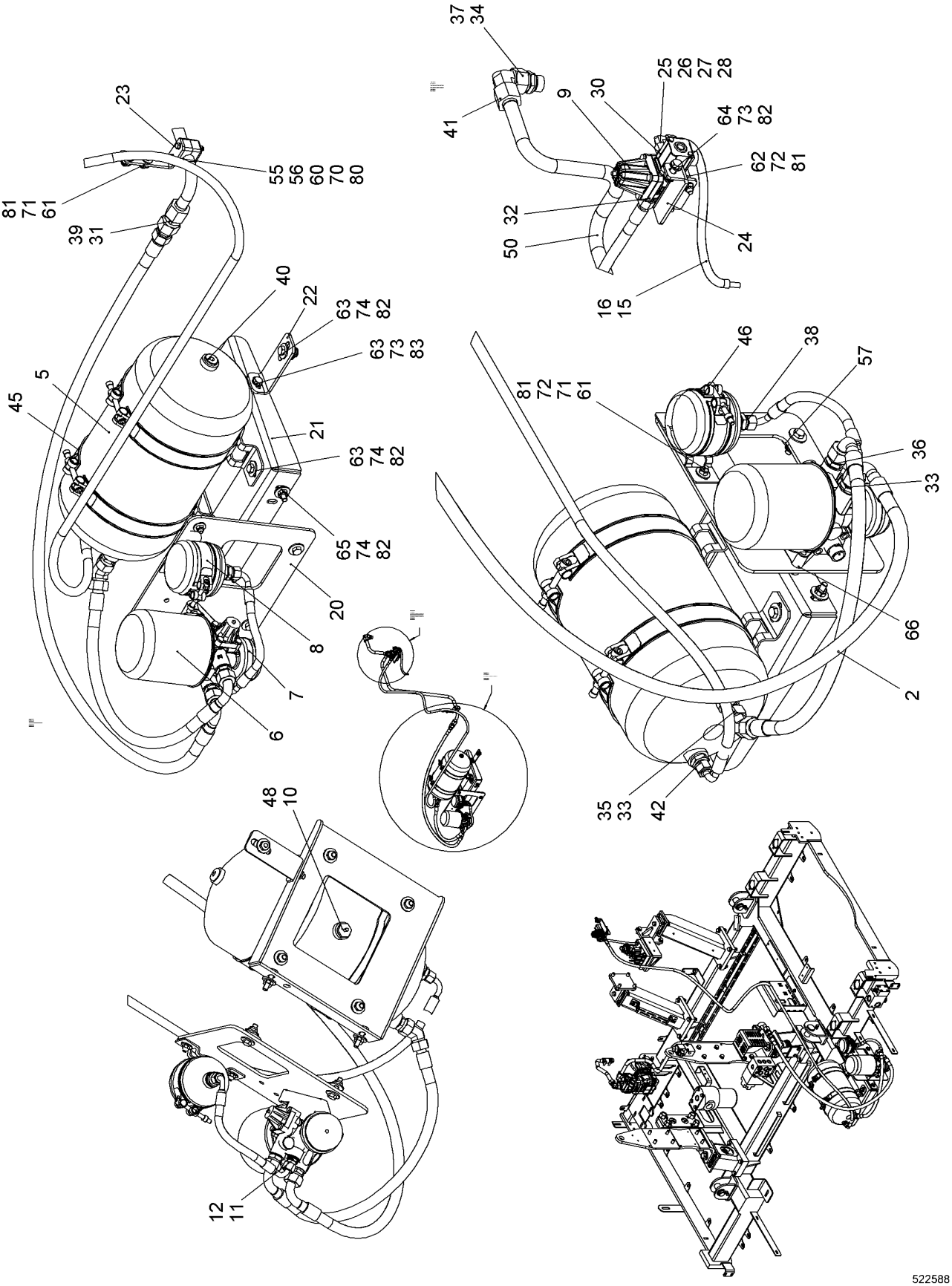

24.5.2017 522588 LIEBHERR	**138376_ETK_001** **AIR DUCT CPL** **LUFTFUEHRUNG KPL**	7 (1/2) **11 92 958 8**

Pos.	Item	Quantity	Description	Bezeichnung	Serie	K
2	11929821	1	HOSE LIST ⇨ ❑ 9	SCHLAUCHLISTE		
5	502919808	1	AIR TANK	LUFTBEHAELTER		
6	11837214	1	AIR DRYER ⇨ ❑ 10	LUFTTROCKNER		
7	502661608	1	SILENCER	GERAEUSCHDAEMPFER		
8	11837331	1	CONTAINER	BEHAELTER		
9	10872307	1	PRESSURE LIMITING VALVE	DRUCKBEGRENZUNGSVENTIL		
10	502921908	1	WATER DRAIN VALVE	ENTWAESSERUNGSVENTIL		
11	11930190	1	RESTRICTOR BODY	DROSSELKOERPER		
12	714001514	1	MAIN JET SOLEX 1MM	HAUPTDUESE SOLEX		
15	11621764	0.5	AIR PIPE	LUFTLEITUNG		
16	10227531	0.5	CORRUGATED PIPE	WELLROHR		
20	11929423	1	WP	WP		
21	11929596	1	WP	WP		
22	11930281	1	WP	WP		
23	11930759	1	WP	WP		
24	11931909	1	WP	WP		
25	10871759	1	PLUG-IN SLEEVE	EINSTECKHUELSE		
26	11926906	1	FITTING	VERSCHRAUBUNG		
27	10816957	1	BOX NUT M14X1.5 AISI 316 TI	UEBERWURFMUTTER		
28	10663840	1	FITTING	VERSCHRAUBUNG		
30	10872598	1	FITTING	VERSCHRAUBUNG		
31	247000902	1	FITTING	VERSCHRAUBUNG		
32	10288174	1	FITTING	VERSCHRAUBUNG		
33	471031108	2	FITTING	VERSCHRAUBUNG		
34	471031308	1	FITTING	VERSCHRAUBUNG		
35	10035314	1	FITTING	VERSCHRAUBUNG		
36	7621827	1	FITTING	VERSCHRAUBUNG		
37	247126202	1	FITTING	VERSCHRAUBUNG		
38	11600199	1	FITTING	VERSCHRAUBUNG		
39	247041102	1	FITTING	VERSCHRAUBUNG		
40	477704514	1	FITTING	VERSCHRAUBUNG		
41	477430614	2	FITTING	VERSCHRAUBUNG		
42	471039908	1	FITTING	VERSCHRAUBUNG		
45	790562114	2	CLAMP	SCHELLE		
46	10513605	1	CLAMP	SCHELLE		
48	710104514	1	SEALING RING	DICHTRING		
50	11930769	1	TUBE	ROHR		
55	602008508	2	CLAMP-HALF	KLEMMHAELFTE		
56	7005053	1	LID PLATE	DECKPLATTE		
57	10351046	1	WASHER 12/50X5 POLYURE.	SCHEIBE		
60	10538800	2	HEX SCREW ISO 4017 M6X55 A4-70	SECHSKANTSCHRAUBE		
61	406501414	4	HEX SCREW ISO 4017 M8X25 A4-70	SECHSKANTSCHRAUBE		
62	10539492	2	SOCKET HEAD SCREW ISO 4762 M8X80 A4-7	ZYLINDERSCHRAUBE		
63	406511614	6	HEX SCREW ISO 4017 M10X30 A4-70	SECHSKANTSCHRAUBE		
64	406509314	1	HEX SCREW ISO 4017 M10X35 A4-70	SECHSKANTSCHRAUBE		
65	406527814	4	HEX SCREW ISO 4017 M10X40 A4-70	SECHSKANTSCHRAUBE		
66	407003014	3	HEX SCREW ISO 8676 M12X1.5X30 8.8	SECHSKANTSCHRAUBE		
70	420000414	4	WASHER ISO 7089 6 A4	SCHEIBE		
71	10540510	6	WASHER ISO 7093-1 8 A4	SCHEIBE		
72	420001014	6	WASHER ISO 7089 8 A4	SCHEIBE		
73	420001114	4	WASHER ISO 7089 10 A4	SCHEIBE		
74	10540511	18	WASHER ISO 7093-1 10 A4	SCHEIBE		
75	4901782	3	WASHER ISO 7089 12 A4	SCHEIBE		
80	10540492	2	HEX NUT ISO 10511 M6 A4	SECHSKANTMUTTER		
81	10540493	6	HEX NUT ISO 10511 M8 A4	SECHSKANTMUTTER		
82	10540494	11	HEX NUT ISO 10511 M10 A4	SECHSKANTMUTTER		

ACHTUNG !
ATTENTION !
ATTENTION !
ATENCIÓN !
ATENÇÃO !
ВНИМАНИЕ

Für Schlauchbestellungen kann über die Schlauchnummer, in der entsprechenden Schlauchliste, die Identnummer festgestellt werden.

For ordering flexible hoses you can find the identification number through the hose-number in the corresponding hose-list.

Pour des ordres de tuyau flexible le nombre d'identification on voit dans la liste de tuyau flexible correspondente.

Para el pedido de manguera, indicar el número de identificación de la manguera de la lista respectiva.

Para se encomendar uma mangueira, consulte o número de identificaçao na respectiva lista de mangueiras.

Для оформления заказов на шланги/рукавы идент. № может быть определен при помощи номера шланга/рукава, указанного в соотетствующем перечне шлангов/рукавов.

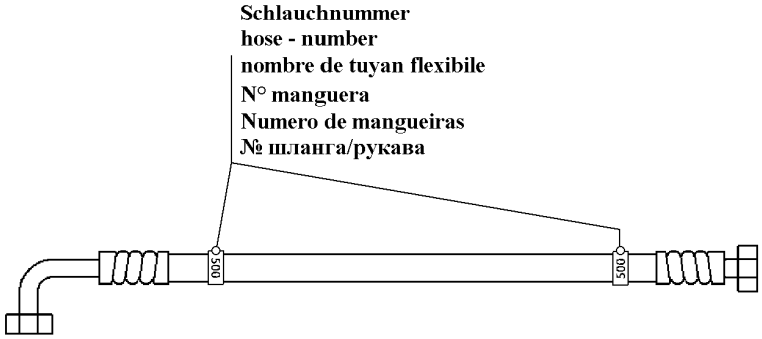

500000

Pos.	Item	Quantity	Description	Bezeichnung	Serie	K
200	928757814	1	HOSE CPL	SCHLAUCH KPL		
201	929443814	1	HOSE CPL	SCHLAUCH KPL		
202	995537614	1	HOSE CPL	SCHLAUCH KPL		
203	992890714	1	HOSE CPL	SCHLAUCH KPL		

OHNE BILD
WITHOUT ILLUSTRATION
SANS PLANCHE
SIN FIG.
SEM ILUSTRAÇÃO
БЕЗ ИЗОБРАЖЕНИЯ

600000

Pos.	Item	Quantity	Description	Bezeichnung	Serie	K
1	571352308	1	CARTOUCHE	KARTUSCHE		

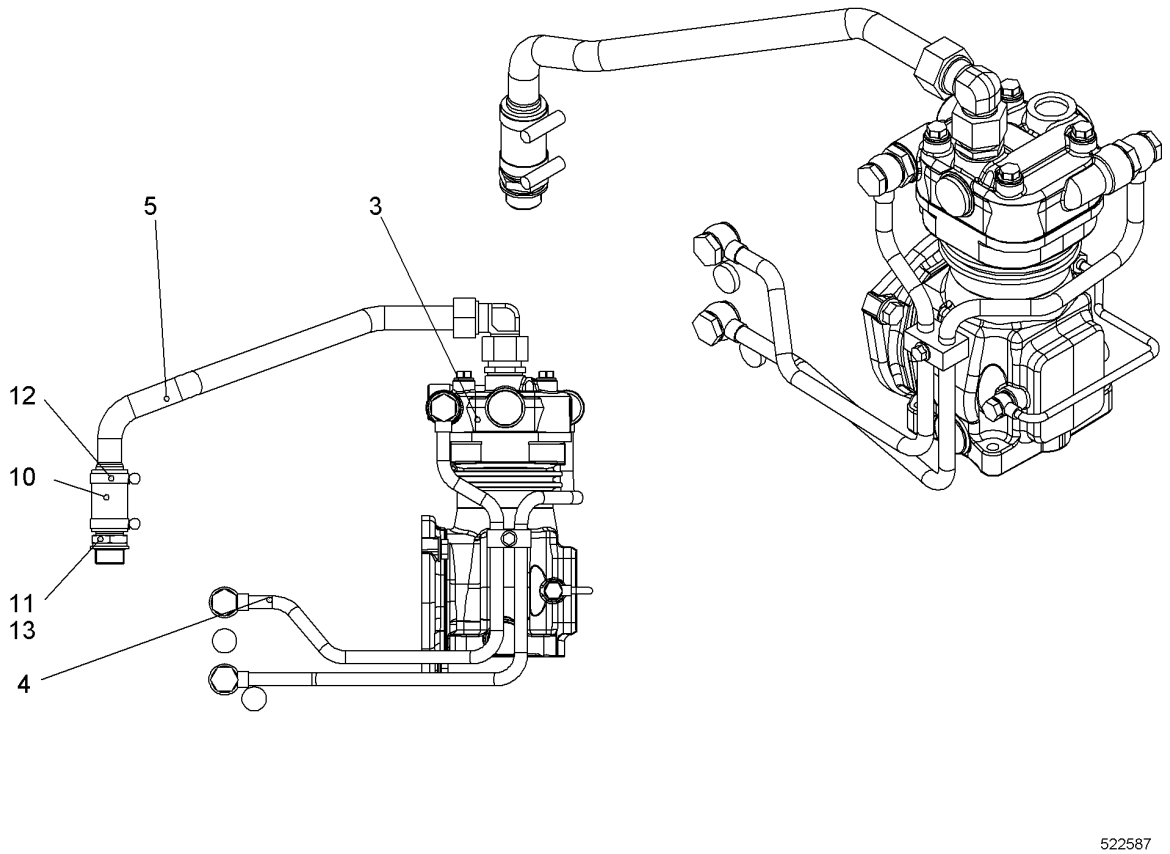

Pos.	Item	Quantity	Description	Bezeichnung	Serie	K
3	11417370	1	AIR COMPRESSOR ⇨ ❑ 12	LUFTPRESSER		
4	11414757	1	ACCESSORIES AIR COMPRESSOR ⇨ ❑ 13	ANBAUTEILE LUFTPRESSER		
5	11414758	1	PIPELINE INSTALLATION	ROHRLEITUNG ANBAU		
10	9271340	1	RUBBER CONNECTION	GUMMIMUFFE		
11	10121893	1	HOSE NIPPLE	SCHLAUCHNIPPEL		
12	790244814	2	HOSE CLAMP	SCHLAUCHSCHELLE		
13	10011870	1	SEALING RING	DICHTRING		

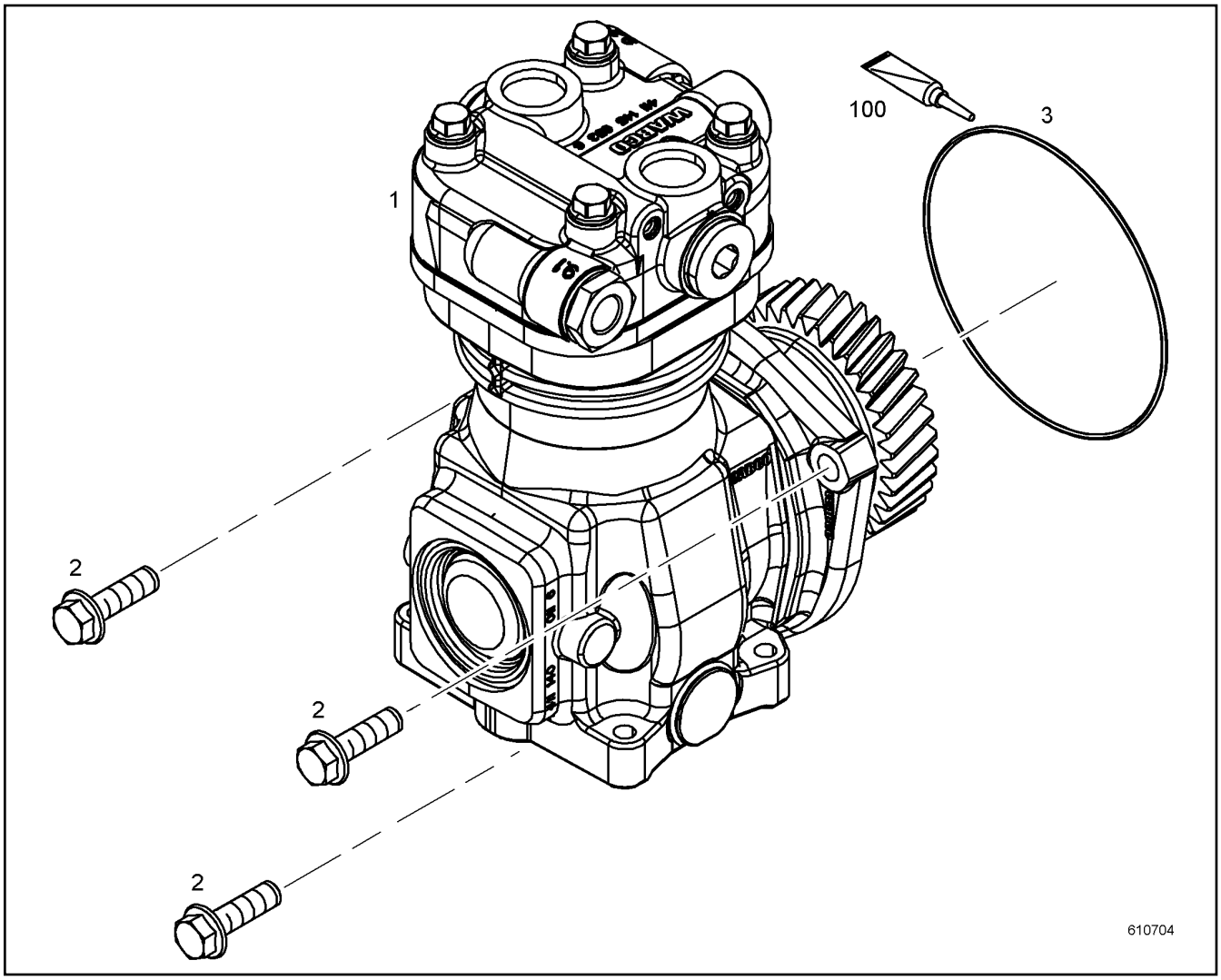

Pos.	Item	Quantity	Description	Bezeichnung	Serie	K
1	11417369	1	AIR COMPRESSOR PRE-ASSY.	LUFTPRESSER VORM.		
2	10016908	3	HEX SCREW EN 1665 M10X30 8.8	SECHSKANTSCHRAUBE		
3	10002310	1	O-RING	O-RING		
100	10285708	1	GREASE	FETT		

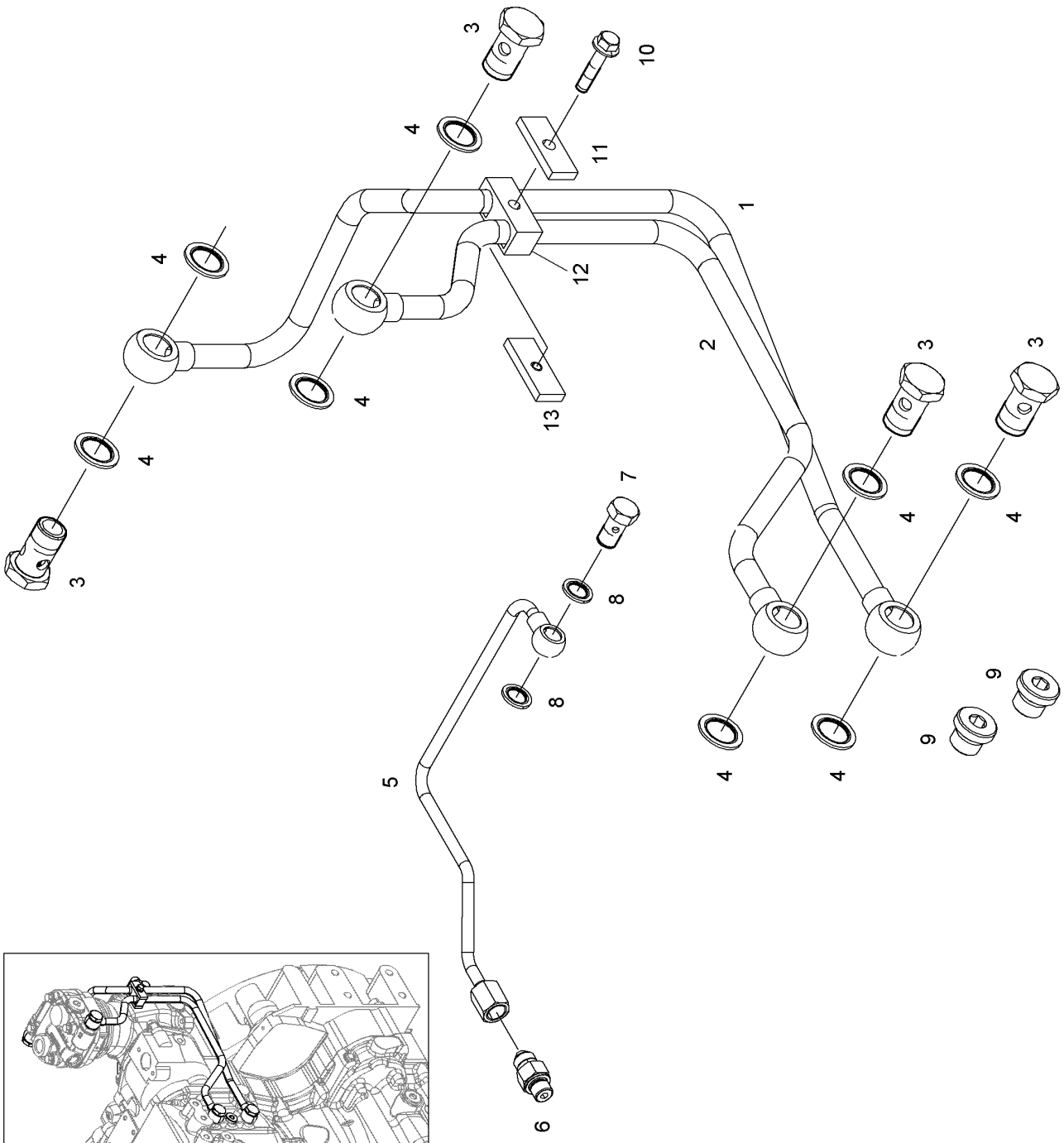

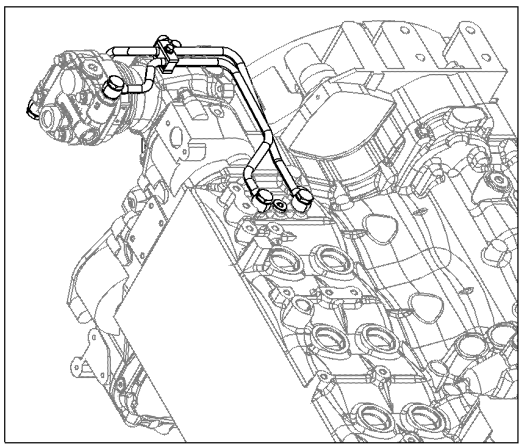

610615

24.5.2017 610615	**138376_ETK_001**	❑ 13 (1/2)
LIEBHERR	**ACCESSORIES AIR COMPRESSOR** **ANBAUTEILE LUFTPRESSER**	**11 41 475 7**

Pos.	Item	Quantity	Description	Bezeichnung	Serie	K
1	11414767	1	COOLING WATER LINE	KUEHLWASSERLEITUNG		
2	11414759	1	COOLING WATER LINE	KUEHLWASSERLEITUNG		
3	4980741	4	HOLLOW SCREW DIN 7643 12X3	HOHLSCHRAUBE		
4	10011867	8	SEALING RING	DICHTRING		
5	11410004	1	PIPELINE	ROHRLEITUNG		
6	10813933	1	FITTING	VERSCHRAUBUNG		
7	4079160	1	HOLLOW SCREW DIN 7643 M10X1	HOHLSCHRAUBE		
8	10011864	2	SEALING RING	DICHTRING		
9	7381638	2	SCREW PLUG	VERSCHLUSSSCHRAUBE		
10	10290537	1	HEX SCREW EN 1665 M6X30 8.8	SECHSKANTSCHRAUBE		
11	9073190	1	SUPPORT PLATE	STUETZBLECH		
12	7382216	1	PIPE CLAMP	ROHRSCHELLE		
13	9073189	1	SUPPORT PLATE	STUETZBLECH		

OHNE BILD
WITHOUT ILLUSTRATION
SANS PLANCHE
SIN FIG.
SEM ILUSTRAÇÃO
БЕЗ ИЗОБРАЖЕНИЯ

600000

Pos.	Item	Quantity	Description	Bezeichnung	Serie	K
100	11931930	1	SUPERSTRUCTURE EL ⇨ ❑ 16	OW EL		
110	11931931	1	CABLE LOOM	KABELSATZ		
120	11931932	1	CABLE LOOM	KABELSATZ		

OHNE BILD
WITHOUT ILLUSTRATION
SANS PLANCHE
SIN FIG.
SEM ILUSTRAÇÃO
БЕЗ ИЗОБРАЖЕНИЯ

600000

Pos.	Item	Quantity	Description	Bezeichnung	Serie	K
15	603202314	1	CABLE TIE	KABELBINDER		
16	603202514	1	CABLE TIE	KABELBINDER		

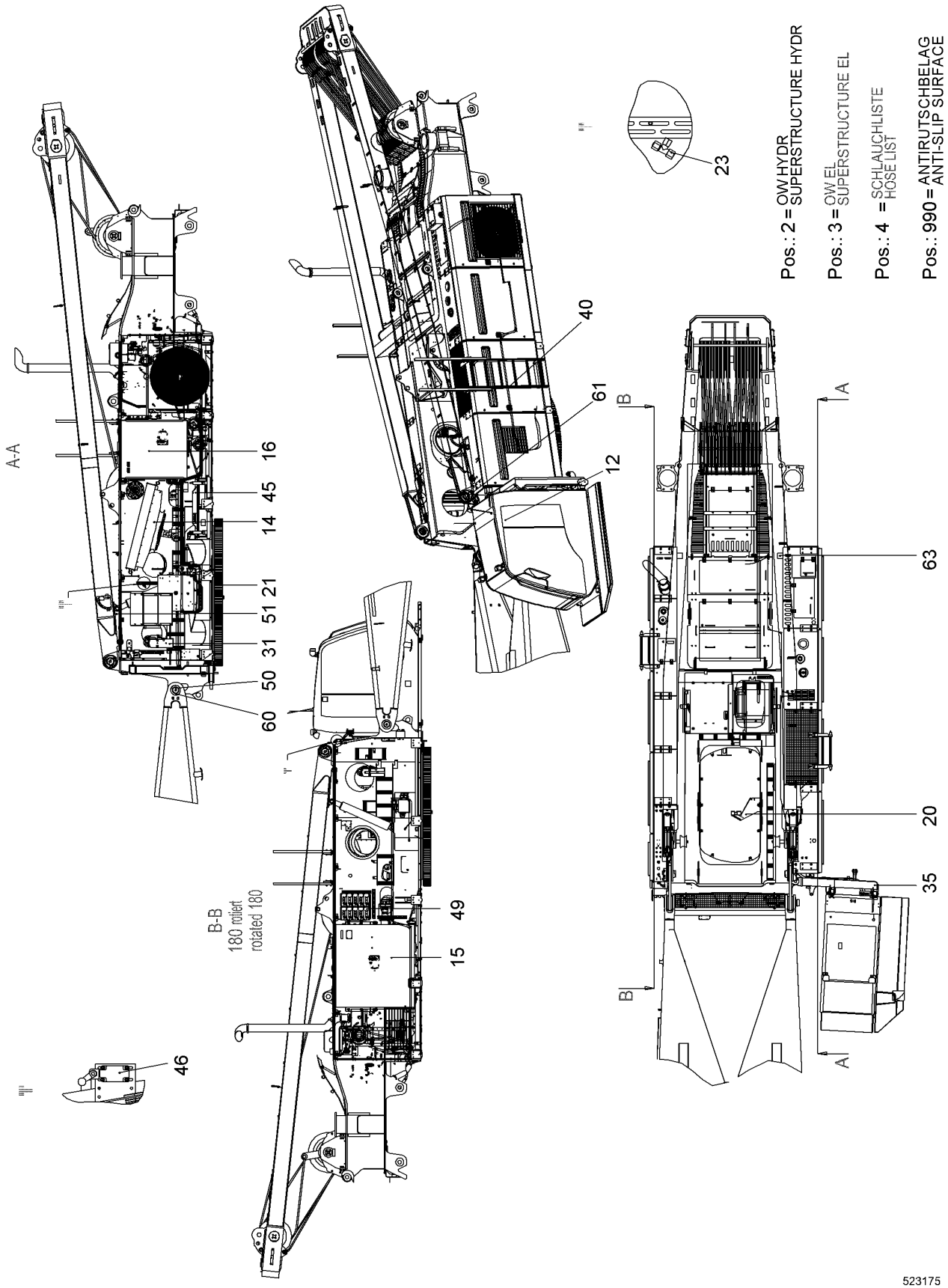
A-A
B-B
180 rotiert
rotated 180
16
45
14
21
51
31
50
60
40
61
12
49
15
46
23
63
20
35
Pos.: 2 = OW HYDR
SUPERSTRUCTURE HYDR
Pos.: 3 = OW EL
SUPERSTRUCTURE EL
Pos.: 4 = SCHLAUCHLISTE
HOSE LIST
Pos.: 990 = ANTIRUTSCHBELAG
ANTI-SLIP SURFACE
523175

Pos.	Item	Quantity	Description	Bezeichnung	Serie	K
2	11296186	1	SUPERSTRUCTURE HYDR ⇨ ❑ 19	OW HYDR		
3	11245190	1	SUPERSTRUCTURE EL ⇨ ❑ 45	OW EL		
4	11269954	1	HOSE LIST ⇨ ❑ 53	SCHLAUCHLISTE		
12	9874345	1	STICKER SOUND VOLUME LEVEL	AUFKLEBER SCHALLEISTUNGS		
14	10519616	1	OIL COOLER INSTALLATION ⇨ ❑ 57	OELKUEHLER EINBAU		
15	10560700	1	TANK INSTALLATION HYDR ⇨ ❑ 58	TANK HYDR EINBAU		
16	10560732	1	FUEL TANK ASSY. ⇨ ❑ 64	KRAFTSTOFFTANK EINBAU		
20	10552681	1	DRIVER INSTALLATION ⇨ ❑ 67	MITNEHMER EINBAU		
21	10519631	1	SUPERSTR. SLEWING RING INSTAL. ⇨ ❑ 69	OW DREHVERBINDUNG EINBAU		
23	11273155	1	CENTRAL GREASING ⇨ ❑ 70	ZENTRALSCHMIERUNG		
31	10578845	2	FIRE EXTINGUISHER MOUNTING ⇨ ❑ 73	FEUERLOESCHER EINBAU		
35	10581634	1	CABIN SUSPENSION CPL ⇨ ❑ 76	KABINENAUFHAENGUNG KPL		
40	990870614	1	LADDER MOUNTING ⇨ ❑ 78	LEITER EINBAU		
45	10560673	1	BATTERY INSTALLATION CPL ⇨ ❑ 79	BATTERIE EINBAU KPL		
46	11310932	1	LIMIT SWITCH INSTALLATION ⇨ ❑ 80	ENDSCHALTER EINBAU		
49	10560694	1	MODULES INSTALLATION ⇨ ❑ 81	MODULE EINBAU		
50	992345114	1	PIVOT BOLT INSTALLATION ⇨ ❑ 82	ANLENKBOLZEN EINBAU		
51	10519694	1	A-FRAME ERECTION CYL INSTAL. ⇨ ❑ 83	A-BOCK AUFRICHTZYL EINBAU		
60	954398703	2	BUSHING 120/150X88 E470;EN 10294-1	BUCHSE		
61	970588503	2	BUSHING 115/135X56 E470;EN 10294-1	BUCHSE		
63	991606114	1	SUPPORT CPL ⇨ ❑ 89	AUFLAGE KPL		
990	11258244	1	ANTI-SLIP SURFACE	ANTIRUTSCHBELAG		

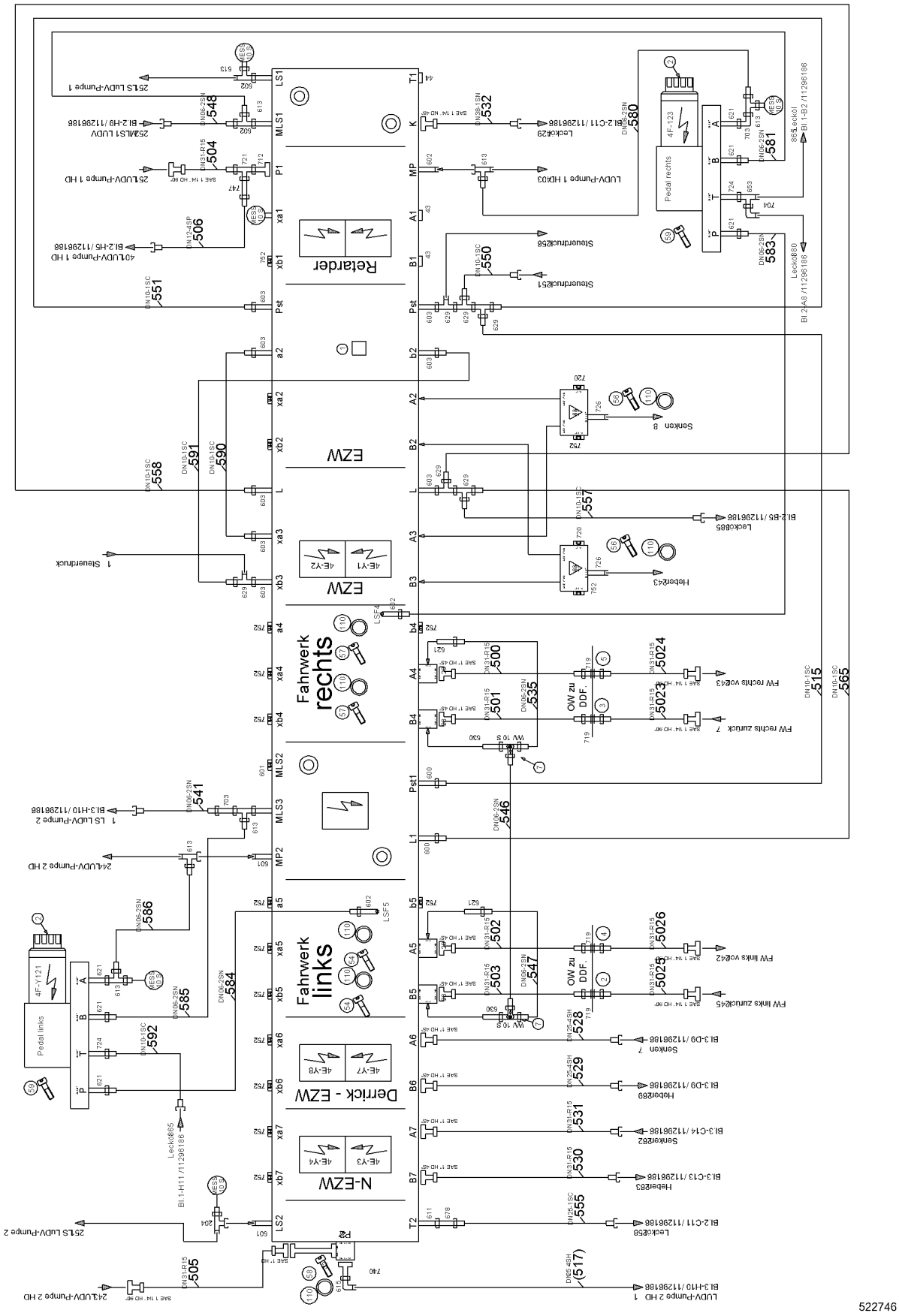
Retarder
EZW
Fahrwerk rechts
Fahrwerk links
Derrick - EZW
N-EZW
Pedal rechts
Pedal links
OW zu DDF
Senken B
Heben243
Senken 7
Heben269
Heben263
Senken262
Heben263
Steuerdruck256
Steuerdruck251
1 Steuerdruck
1 LS LUDV-Pumpe 2
25LS LUDV-Pumpe 1
25LS LUDV-Pumpe 2
25MLS1 LUDV
40LUDV-Pumpe 1 HD
241LUDV-Pumpe 2 HD
LUDV-Pumpe 1 HD103
LUDV-Pumpe 2 HD 1
Leck865
Leck880
Leck885
Leck258
FW links vor242
FW links zurück245
FW rechts vor243
FW rechts zurück 7
4E-Y1
4E-Y2
4E-Y3
4E-Y4
4E-Y7
4E-Y8
4F-123
4F-Y121
DN10-1SC
DN25-4SH
DN31-R15
DN36-1SN
DN06-2SN
DN10-4SP
DN25-1SC
DN10-4SC
DN10-1SC
DN06-2SN
DN25-4SH
DN31-R15
DN06-2SN
DN10-1SC
DN06-2SN
DN10-1SC
DN06-2SN
DN10-1SC

Pos.	Item	Quantity	Description	Bezeichnung	Serie	K
1	11286476	1	VALVE BLOCK ⇨ ❑ 27	VENTILBLOCK		
2	11286481	2	DIRECTIONAL CONTROL VALVE	WEGEVENTIL		
3	10351486	1	VALVE BLOCK ⇨ ❑ 34	VENTILBLOCK		
4	592145814	1	VALVE BLOCK ⇨ ❑ 38	VENTILBLOCK		
6	10541514	1	VALVE BLOCK SINGLE DISK	VENTILBLOCKEINZELSCHEIBE		
7	511491914	2	SHUTTLE VALVE	WECHSELVENTIL		
8	511704214	1	QUICK-FITTING THREAD COUPLING	SCHNELLVERSCHRAUBUNGSK		
9	946293614	1	RESTRICTOR BODY	DROSSELKOERPER		
10	513313914	2	DOUBLE-ACTING CYL ⇨ ❑ 39	DOPPELWIRKZYL		
11	511432714	5	DIRECTIONAL CONTROL VALVE	WEGEVENTIL		
12	510662614	2	CONNECTING PLATE	ANSCHLUSSPLATTE		
13	511657614	1	TEMPERATURE CONTROLLER ⇨ ❑ 40	TEMPERATURREGLER		
14	510572214	2	QUICK-FITTING THREAD COUPLING	SCHNELLVERSCHRAUBUNGSK		
15	510571914	1	QUICK-FITTING THREAD COUPLING ⇨ ❑ 41	SCHNELLVERSCHRAUBUNGSK		
16	511708414	1	QUICK-FITTING THREAD COUPLING	SCHNELLVERSCHRAUBUNGSK		
17	511511314	1	QUICK-FITTING THREAD COUPLING	SCHNELLVERSCHRAUBUNGSK		
18	511511214	1	QUICK-FITTING THREAD COUPLING	SCHNELLVERSCHRAUBUNGSK		
19	10445105	1	QUICK RELEASE FITTING ⇨ ❑ 42	SCHNELLVERSCHLUSSKUPPLUN		
20	511495814	1	INTERMEDIATE PLATE	ZWISCHENPLATTE		
21	10225925	1	COOLER MOTOR ⇨ ❑ 43	KUEHLER MOTOR		
23	510662914	3	CONNECTING PLATE	ANSCHLUSSPLATTE		
25	946294214	1	BLOCK	BLOCK		
26	991487414	1	RESTRICTOR BODY	DROSSELKOERPER		
28	956274314	4	FLANGE	FLANSCH		
30	943958914	1	BLOCK	BLOCK		
31	511607214	1	NON-RETURN VALVE	RUECKSCHLAGVENTIL		
32	790227714	1	CONNECTING FLANGE SAE	FLANSCHVERBINDUNG SAE		
33	592044714	1	NON-RETURN VALVE	RUECKSCHLAGVENTIL		
35	10548543	1	LID CPL	DECKEL KPL		
37	991867414	1	RESTRICTOR BODY	DROSSELKOERPER		
38	714001914	2	MAIN JET SOLEX 0.8MM	HAUPTDUESE SOLEX		
39	510682014	1	BALL VALVE	KUGELHAHN		
40	969329314	1	WELD PLATE	ANSCHWEISSPLATTE		
41	511631514	1	NON-RETURN VALVE	RUECKSCHLAGVENTIL		
42	944672614	1	CLOSING FLANGE	VERSCHLUSSFLANSCH		
43	510705314	2	SEALING FLANGE SAE	VERSCHLUSSFLANSCH SAE		
44	11293256	4	SEALING FLANGE SAE	VERSCHLUSSFLANSCH SAE		
45	949341514	1	CLOSING FLANGE	VERSCHLUSSFLANSCH		
46	477401814	1	FITTING	VERSCHRAUBUNG		
47	477700714	1	FITTING	VERSCHRAUBUNG		
54	10554335	8	HEX SCREW ISO 4017 M12X70 10.9	SECHSKANTSCHRAUBE		
55	4001246	16	HEX SCREW ISO 4017 M10X35 10.9	SECHSKANTSCHRAUBE		
56	4901067	16	SOCKET HEAD SCREW ISO 4762 M12X65 10.9	ZYLINDERSCHRAUBE		
57	4600505	8	SOCKET HEAD SCREW ISO 4762 M12X70 10.9	ZYLINDERSCHRAUBE		
58	404313401	4	SOCKET HEAD SCREW ISO 4762 M12X140 10.	ZYLINDERSCHRAUBE		
59	4600552	28	SOCKET HEAD SCREW ISO 4762 M5X50 10.9	ZYLINDERSCHRAUBE		
60	460023503	8	HEX SCREW ISO 4014 M12X80 10.9	SECHSKANTSCHRAUBE		

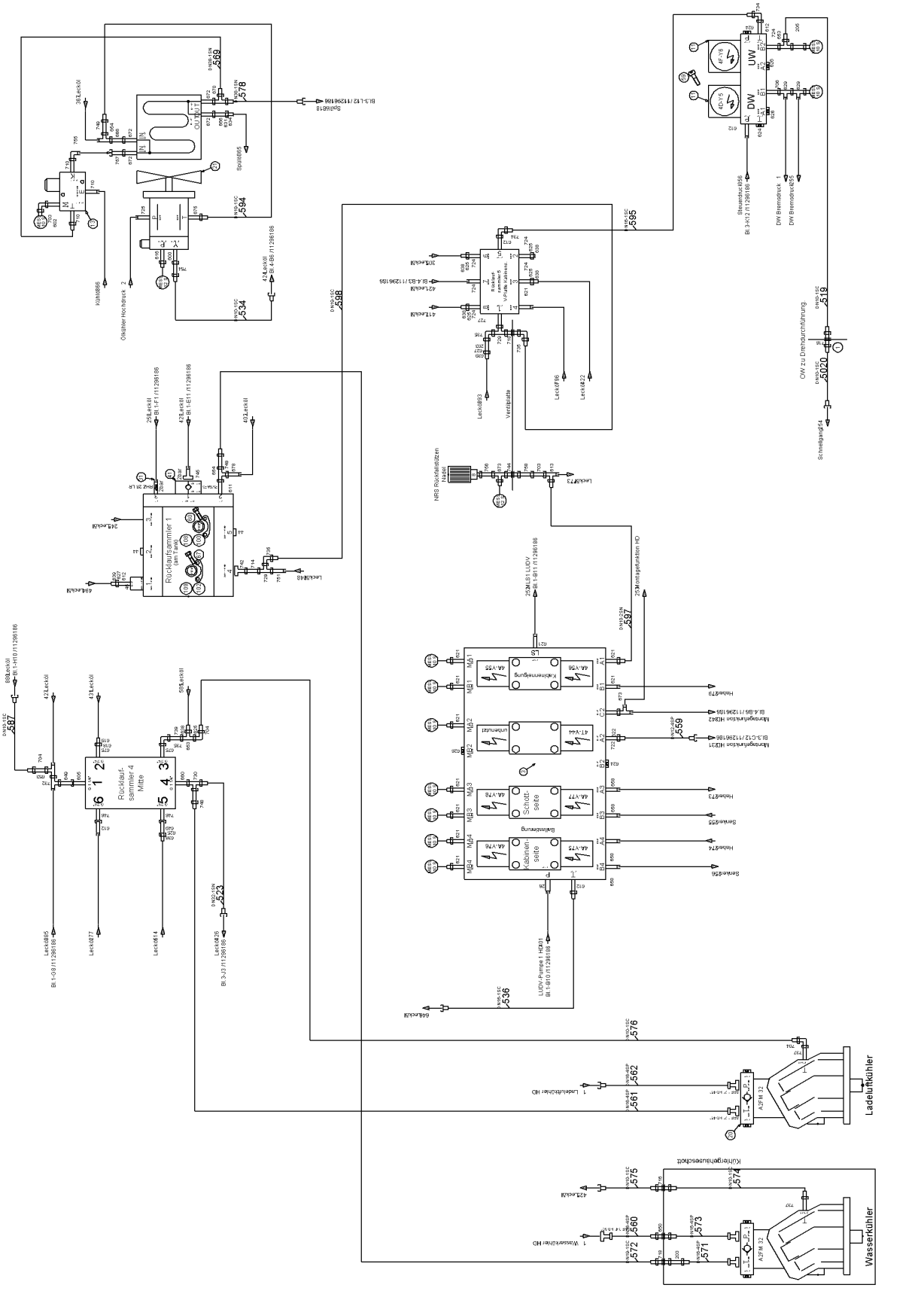
Rücklaufsammler 1
(am Tank)
Rücklauf-sammler 4 Mitte
Schott-seite
Kabinen-seite
Ladeluftkühler
Wasserkühler
Kühlergehäuseschott
NRS Rückfahrlichter
Steuerdruck 1
DW Bremsdruck 1
OW zu Drehdurchführung
Schnellkupplung4
Ölkühler Hochhub 2
Ölkühler Hochhub 1
Ventilplatte
Bremsventil
Schnellkupplung
Verteilerblock
Kühlgebläse
Kühlmittelpumpe
Ölpumpe
Wasserpumpe
Thermostat
Ausgleichsbehälter
Entlüftungsventil
Temperatursensor
Drucksensor
Füllstandsanzeige
Ölfilter
Wasserfilter
Kraftstoffpumpe
Kraftstoffvorfilter
Kraftstoffhauptfilter
Kraftstoffrücklauf
Kraftstoffzulauf
Kraftstoffentlüftung
Kraftstoffablass
Kraftstoffsensor
Kraftstoffventil
Kraftstoffleitung
Kraftstoffschlauch
Kraftstoffanschluss
Kraftstoffverschraubung
Kraftstoffdichtung
Kraftstoffschraube
Kraftstoffmutter
Kraftstoffscheibe
Kraftstoffbolzen
Kraftstoffstift
Kraftstoffhülse
Kraftstoffbuchse
Kraftstoffwelle
Kraftstoffachse
Kraftstoffrad
Kraftstoffreifen
Kraftstoffnabe
Kraftstoffspeiche
Kraftstoffkranz
Kraftstoffzahn
Kraftstoffgetriebe
Kraftstoffmotor
Kraftstoffgenerator
Kraftstoffbatterie
Kraftstoffkabel
Kraftstoffstecker
Kraftstoffbuchse
Kraftstoffschalter
Kraftstoffrelais
Kraftstoffsicherung
Kraftstoffleuchte
Kraftstoffanzeige
Kraftstoffmesser
Kraftstoffsensor
Kraftstoffventil
Kraftstoffleitung
Kraftstoffschlauch
Kraftstoffanschluss
Kraftstoffverschraubung
Kraftstoffdichtung
Kraftstoffschraube
Kraftstoffmutter
Kraftstoffscheibe
Kraftstoffbolzen
Kraftstoffstift
Kraftstoffhülse
Kraftstoffbuchse
Kraftstoffwelle
Kraftstoffachse
Kraftstoffrad
Kraftstoffreifen
Kraftstoffnabe
Kraftstoffspeiche
Kraftstoffkranz
Kraftstoffzahn
Kraftstoffgetriebe
Kraftstoffmotor
Kraftstoffgenerator
Kraftstoffbatterie
Kraftstoffkabel
Kraftstoffstecker
Kraftstoffbuchse
Kraftstoffschalter
Kraftstoffrelais
Kraftstoffsicherung
Kraftstoffleuchte
Kraftstoffanzeige
Kraftstoffmesser

522747

Pos.	Item	Quantity	Description	Bezeichnung	Serie	K
61	4600366	36	HEX SCREW ISO 4017 M12X40 10.9	SECHSKANTSCHRAUBE		
62	10539300	24	HEX SCREW ISO 4017 M14X45 10.9	SECHSKANTSCHRAUBE		
64	4062002	16	HEX SCREW ISO 4017 M8X30 10.9	SECHSKANTSCHRAUBE		
65	4066122	8	HEX SCREW ISO 4017 M12X35 10.9	SECHSKANTSCHRAUBE		
67	4066098	48	HEX SCREW ISO 4017 M10X30 10.9	SECHSKANTSCHRAUBE		
100	510574414	8	FLANGE HALF	FLANSCHHAELFTE		
101	510587514	8	FLANGE HALF	FLANSCHHAELFTE		
102	511502414	24	FLANGE HALF	FLANSCHHAELFTE		
103	510586614	12	FLANGE HALF	FLANSCHHAELFTE		
104	510586914	18	FLANGE HALF	FLANSCHHAELFTE		
105	510548714	8	FLANGE HALF	FLANSCHHAELFTE		
106	10490784	4	RECTANGULAR SECTION RING	RECHTECKRING		
107	10490785	4	RECTANGULAR SECTION RING	RECHTECKRING		
108	10490787	5	RECTANGULAR SECTION RING	RECHTECKRING		
109	10472425	18	RECTANGULAR SECTION RING	RECHTECKRING		
110	10490781	19	RECTANGULAR SECTION RING	RECHTECKRING		
200	510664814	2	GAUGE CONNECTION	MESSSTUTZEN		
201	7409720	1	GAUGE CONNECTION	MESSSTUTZEN		
202	510694514	19	GAUGE CONNECTION	MESSSTUTZEN		
203	247041102	1	FITTING	VERSCHRAUBUNG		
204	482431314	1	FITTING	VERSCHRAUBUNG		
205	485431414	1	FITTING	VERSCHRAUBUNG		
600	471030508	3	FITTING	VERSCHRAUBUNG		
601	471008214	3	FITTING	VERSCHRAUBUNG		
602	471004514	11	FITTING	VERSCHRAUBUNG		
603	7362091	12	FITTING	VERSCHRAUBUNG		
605	247116402	3	FITTING	VERSCHRAUBUNG		
606	247043102	2	FITTING	VERSCHRAUBUNG		
607	247042702	1	FITTING	VERSCHRAUBUNG		
608	471100414	2	FITTING	VERSCHRAUBUNG		
609	247027202	1	FITTING	VERSCHRAUBUNG		
610	247011602	1	FITTING	VERSCHRAUBUNG		
611	247010102	4	FITTING	VERSCHRAUBUNG		
612	247009702	13	FITTING	VERSCHRAUBUNG		
613	7367776	12	FITTING	VERSCHRAUBUNG		
614	790453814	1	FITTING	VERSCHRAUBUNG		
615	482531614	1	FITTING	VERSCHRAUBUNG		
616	471032908	1	FITTING	VERSCHRAUBUNG		
617	471100114	3	FITTING	VERSCHRAUBUNG		
618	247049002	1	FITTING	VERSCHRAUBUNG		
619	477700214	1	FITTING	VERSCHRAUBUNG		
620	474002314	4	FITTING	VERSCHRAUBUNG		
621	471032808	27	FITTING	VERSCHRAUBUNG		
622	471032608	1	FITTING	VERSCHRAUBUNG		
624	247112702	9	FITTING	VERSCHRAUBUNG		
625	247048802	6	FITTING	VERSCHRAUBUNG		
626	247128402	8	FITTING	VERSCHRAUBUNG		
627	247049102	2	FITTING	VERSCHRAUBUNG		
628	474032614	3	FITTING	VERSCHRAUBUNG		
629	247242302	11	FITTING	VERSCHRAUBUNG		
630	481930414	3	FITTING	VERSCHRAUBUNG		
631	247049202	1	FITTING	VERSCHRAUBUNG		
632	477701414	2	FITTING	VERSCHRAUBUNG		
633	477400714	2	FITTING	VERSCHRAUBUNG		
634	477700814	1	FITTING	VERSCHRAUBUNG		
635	475501414	2	FITTING	VERSCHRAUBUNG		
636	474032914	2	FITTING	VERSCHRAUBUNG		
638	477700514	6	FITTING	VERSCHRAUBUNG		
639	477700114	2	FITTING	VERSCHRAUBUNG		

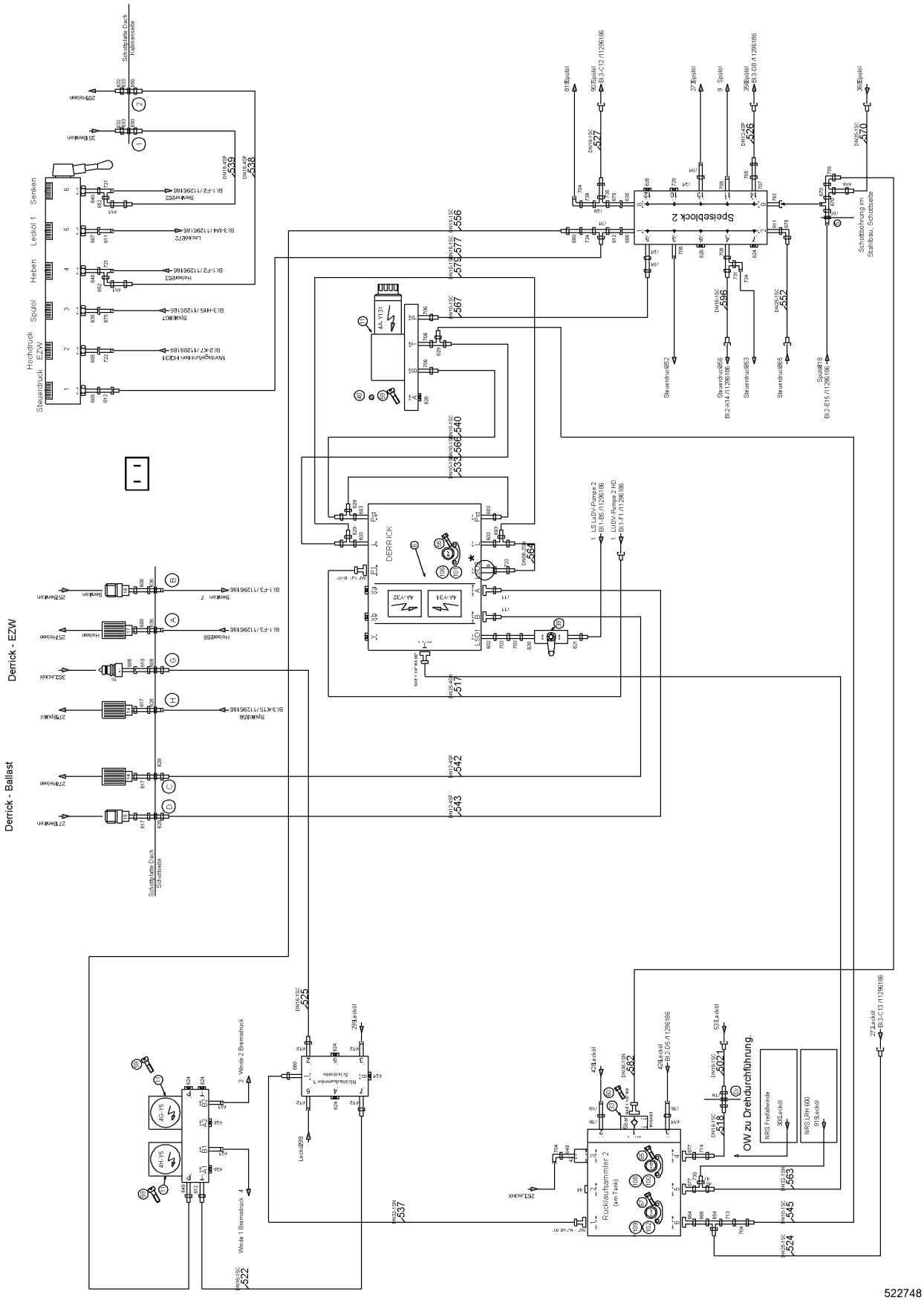
Derrick - EZW
Derrick - Ballast
Speiseblock 2
DERRICK
Rücklaufsammler 2
OW zu Drehdurchführung.
Schottblatte Dach Kabinenseite
Schottblatte Dach Schottseite
Schottbohrung im Stahlbau, Schottseite
Winde 1 Bremsdruck
Winde 2 Bremsdruck
522748

Pos.	Item	Quantity	Description	Bezeichnung	Serie	K
640	7410455	2	FITTING	VERSCHRAUBUNG		
649	247009202	6	FITTING	VERSCHRAUBUNG		
650	474032714	2	FITTING	VERSCHRAUBUNG		
651	485435014	2	FITTING	VERSCHRAUBUNG		
652	482531814	2	FITTING	VERSCHRAUBUNG		
653	247128602	4	FITTING	VERSCHRAUBUNG		
654	247020902	3	FITTING	VERSCHRAUBUNG		
658	471032708	4	FITTING	VERSCHRAUBUNG		
660	247232702	2	FITTING	VERSCHRAUBUNG		
664	510704614	1	FITTING	VERSCHRAUBUNG		
666	485431314	4	FITTING	VERSCHRAUBUNG		
670	7367986	3	FITTING	VERSCHRAUBUNG		
672	471034708	4	FITTING	VERSCHRAUBUNG		
673	7617461	3	FITTING	VERSCHRAUBUNG		
675	247009902	5	FITTING	VERSCHRAUBUNG		
677	510701314	2	FITTING	VERSCHRAUBUNG		
678	7617494	2	FITTING	VERSCHRAUBUNG		
680	247040302	1	FITTING	VERSCHRAUBUNG		
681	247042402	4	FITTING	VERSCHRAUBUNG		
693	482430314	1	FITTING	VERSCHRAUBUNG		

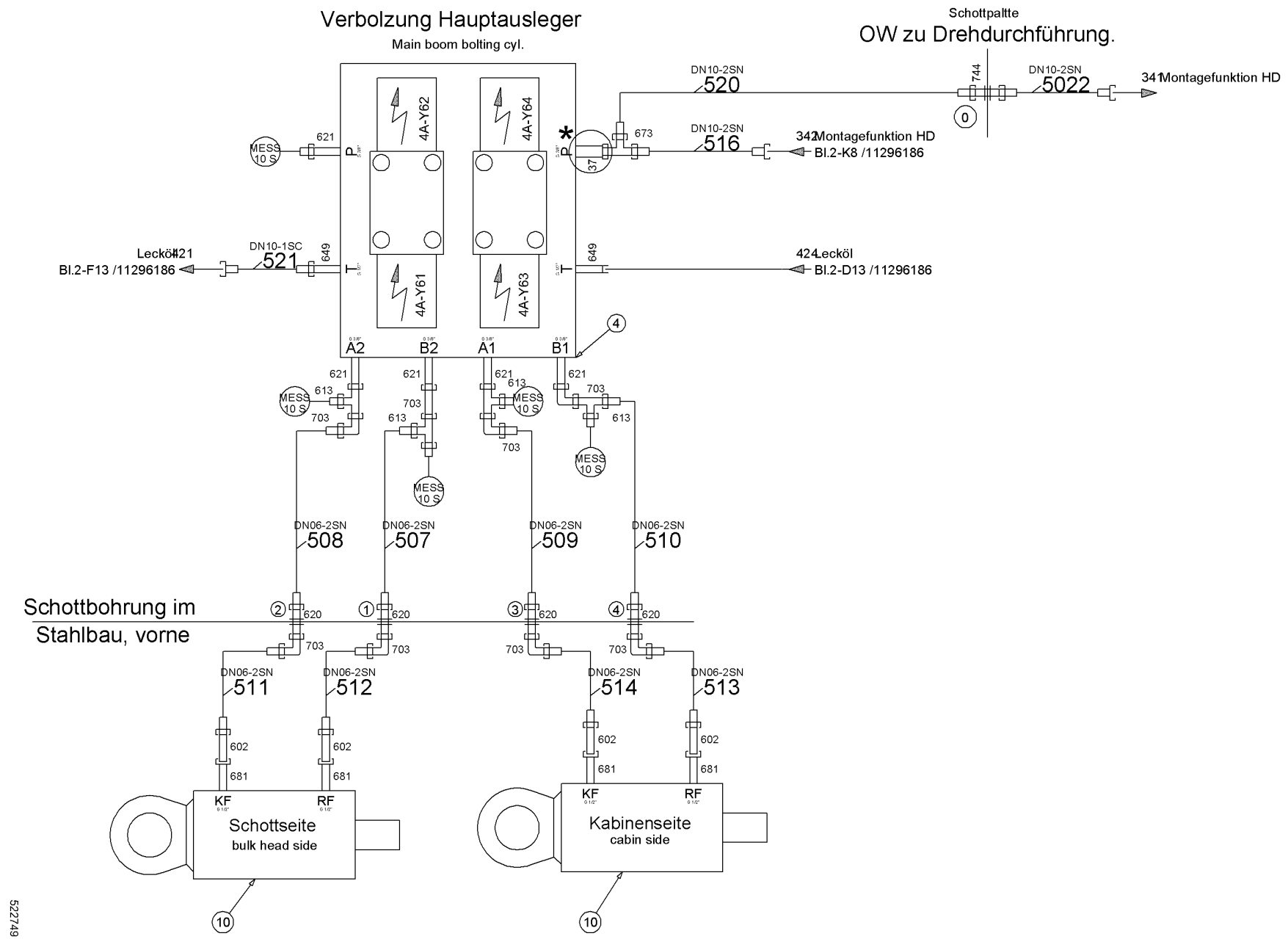
Verbolzung Hauptausleger
Main boom bolting cyl.
Schottpaltte
OW zu Drehdurchführung.
DN10-2SN
520
DN10-2SN
5022
341 Montagefunktion HD
744
0
DN10-2SN
516
342 Montagefunktion HD
Bl.2-K8 /11296186
673
37
621
MESS
10 S
4A-Y62
4A-Y64
4A-Y61
4A-Y63
421 Lecköl
Bl.2-F13 /11296186
DN10-1SC
521
649
424 Lecköl
Bl.2-D13 /11296186
A2
B2
A1
B1
4
613
703
DN06-2SN
508
DN06-2SN
507
DN06-2SN
509
DN06-2SN
510
Schottbohrung im
Stahlbau, vorne
620
602
681
DN06-2SN
511
DN06-2SN
512
DN06-2SN
514
DN06-2SN
513
KF
RF
Schottseite
bulk head side
Kabinenseite
cabin side
10
522749

Pos.	Item	Quantity	Description	Bezeichnung	Serie	K
703	7617268	13	FITTING	VERSCHRAUBUNG		
704	247117702	9	FITTING	VERSCHRAUBUNG		
705	7617460	1	FITTING	VERSCHRAUBUNG		
706	471007014	4	FITTING	VERSCHRAUBUNG		
707	471033114	1	FITTING	VERSCHRAUBUNG		
708	247261802	3	FITTING	VERSCHRAUBUNG		
710	10225291	3	FITTING	VERSCHRAUBUNG		
711	510701914	2	FITTING	VERSCHRAUBUNG		
712	510702414	1	FITTING	VERSCHRAUBUNG		
713	485435714	1	FITTING	VERSCHRAUBUNG		
714	485431214	2	FITTING	VERSCHRAUBUNG		
716	247027002	1	FITTING	VERSCHRAUBUNG		
718	247027302	2	FITTING	VERSCHRAUBUNG		
719	474033014	4	FITTING	VERSCHRAUBUNG		
720	477704614	3	FITTING	VERSCHRAUBUNG		
721	482331914	3	FITTING	VERSCHRAUBUNG		
722	471033214	2	FITTING	VERSCHRAUBUNG		
723	472531508	1	FITTING	VERSCHRAUBUNG		
724	247009402	10	FITTING	VERSCHRAUBUNG		
725	471033414	1	FITTING	VERSCHRAUBUNG		
726	471034414	2	FITTING	VERSCHRAUBUNG		
727	247121102	1	FITTING	VERSCHRAUBUNG		
729	247138602	3	FITTING	VERSCHRAUBUNG		
730	482330814	2	FITTING	VERSCHRAUBUNG		
731	247128502	2	FITTING	VERSCHRAUBUNG		
732	247105602	1	FITTING	VERSCHRAUBUNG		
734	247108302	4	FITTING	VERSCHRAUBUNG		
735	247126202	5	FITTING	VERSCHRAUBUNG		
736	482530914	1	FITTING	VERSCHRAUBUNG		
737	471030708	1	FITTING	VERSCHRAUBUNG		
738	471033614	1	FITTING	VERSCHRAUBUNG		
739	247040902	2	FITTING	VERSCHRAUBUNG		
740	510703914	1	FITTING	VERSCHRAUBUNG		
742	510702014	1	FITTING	VERSCHRAUBUNG		
744	474002414	2	FITTING	VERSCHRAUBUNG		
745	510701214	1	FITTING	VERSCHRAUBUNG		
746	247042502	2	FITTING	VERSCHRAUBUNG		
747	485434214	1	FITTING	VERSCHRAUBUNG		
748	485430714	1	FITTING	VERSCHRAUBUNG		
749	247041502	2	FITTING	VERSCHRAUBUNG		
752	247117302	15	FITTING	VERSCHRAUBUNG		
755	482530814	2	FITTING	VERSCHRAUBUNG		
756	471100714	1	FITTING	VERSCHRAUBUNG		
757	491101214	1	FITTING	VERSCHRAUBUNG		
758	485433414	1	FITTING	VERSCHRAUBUNG		
759	485432814	1	FITTING	VERSCHRAUBUNG		
760	474001214	1	FITTING	VERSCHRAUBUNG		
761	481931114	1	FITTING	VERSCHRAUBUNG		

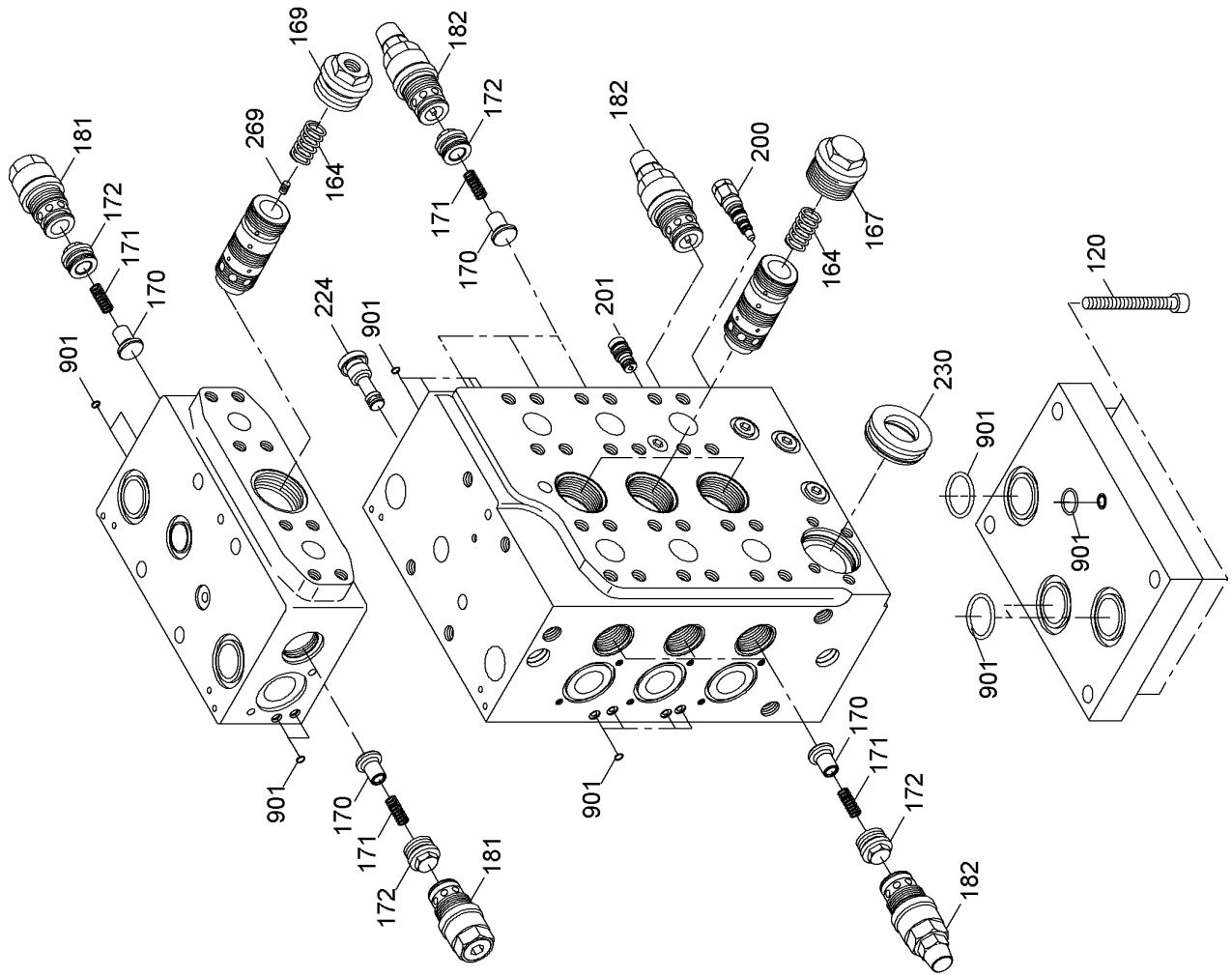

24.5.2017 609968 LIEBHERR	**138376_ETK_001** **VALVE BLOCK** **VENTILBLOCK**	❑ 27 (1/4) **11 28 647 6**

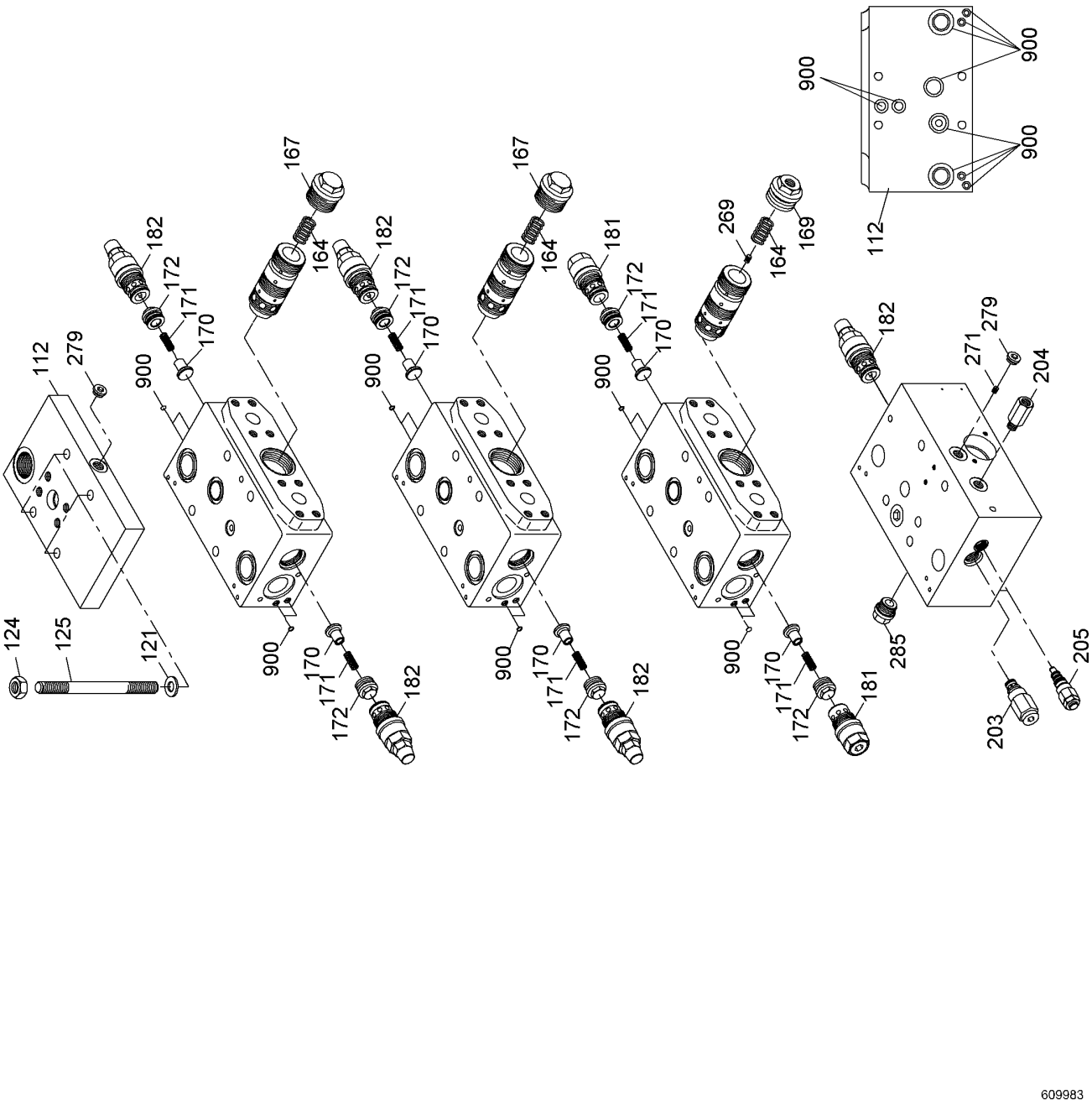
609983

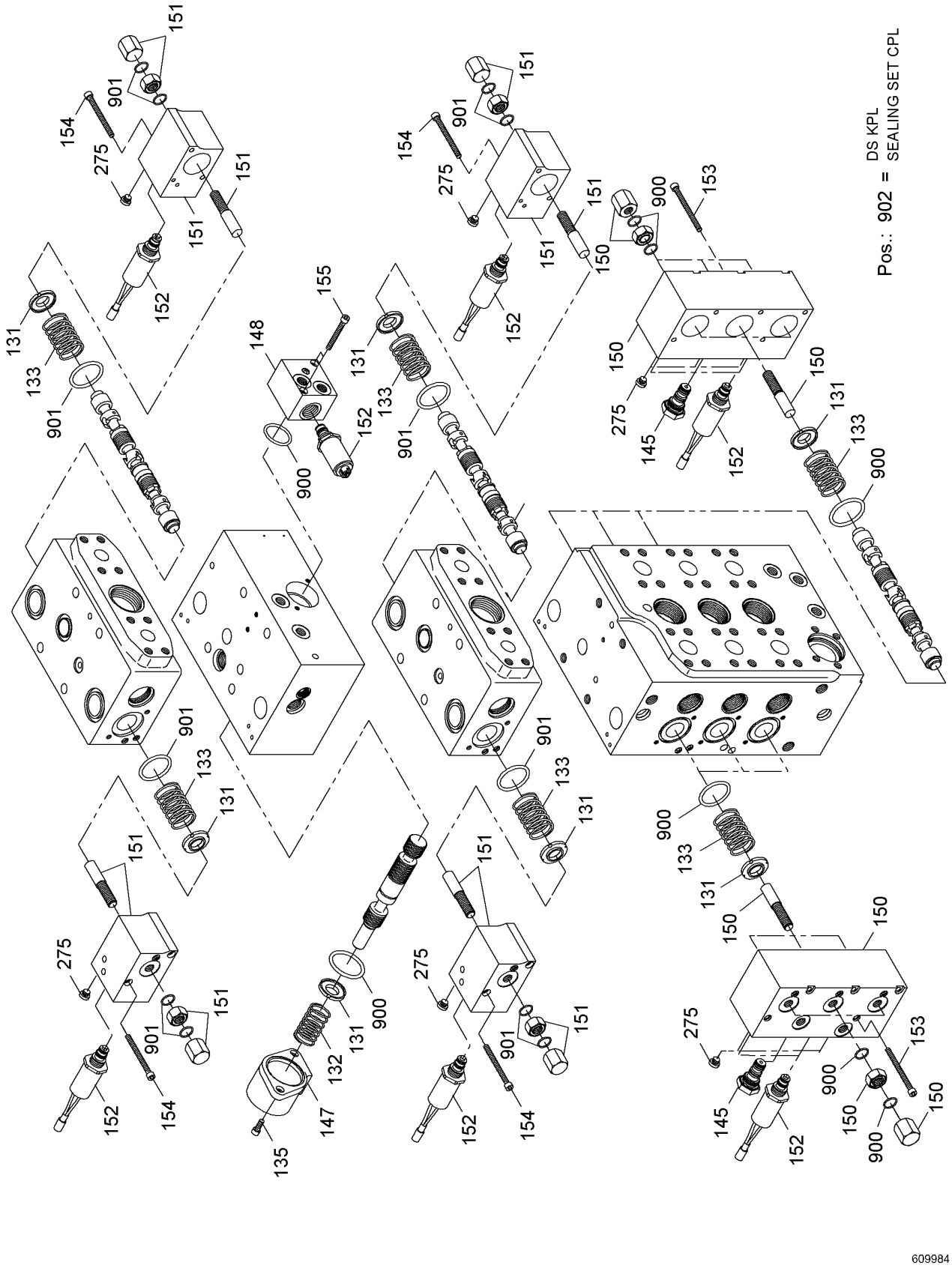

24.5.2017 609984	**138376_ETK_001**	29 (3/4)
LIEBHERR	**VALVE BLOCK** **VENTILBLOCK**	**11 28 647 6**

Pos.	Item	Quantity	Description	Bezeichnung	Serie	K
112	592072914	1	SHEET	PLATTE		
120	11651481	4	SOCKET HEAD SCREW ISO 4762 M10X35 10.9	ZYLINDERSCHRAUBE		
121	11233289	4	WASHER ISO 7089 24/13X2.5 ST	SCHEIBE		
124	11233292	4	HEX NUT ISO 4032 M12 10	SECHSKANTMUTTER		
125	11934656	4	DOUBLE-ENDED STUD DIN 939 M12X440	STIFTSCHRAUBE		
131	790579314	15	SPRING SUPPORT	FEDERTELLER		
132	10349778	1	PRESSURE SPRING	DRUCKFEDER		
133	10296909	14	PRESSURE SPRING	DRUCKFEDER		
135	11233296	2	SOCKET HEAD SCREW ISO 4762 M6X16 8.8	ZYLINDERSCHRAUBE		
145	592070714	2	RESTRICTOR VALVE ⇨ ❑ 31	DROSSELVENTIL		
147	11301913	1	COVER	DECKEL		
148	11233332	1	COVER	DECKEL		
150	11233333	2	COVER	DECKEL		
151	11233338	8	COVER	DECKEL		
152	592300614	13	SOLENOID VALVE ⇨ ❑ 32	MAGNETVENTIL		
153	11233401	10	SOCKET HEAD SCREW ISO 4762 M6X75 10.9	ZYLINDERSCHRAUBE		
154	11233402	16	SOCKET HEAD SCREW ISO 4762 M6X70 8.8	ZYLINDERSCHRAUBE		
155	11233404	2	SOCKET HEAD SCREW ISO 4762 M6X50 8.8	ZYLINDERSCHRAUBE		
164	7000942	7	PRESSURE SPRING	DRUCKFEDER		
167	10228470	5	SCREW PLUG M39X1.5X36.5	VERSCHLUSSSCHRAUBE		
169	10301757	2	SCREW PLUG M39X1.5X36.5	VERSCHLUSSSCHRAUBE		
170	7024502	14	TAPER	KEGEL		
171	7024503	14	PRESSURE SPRING	DRUCKFEDER		
172	7024504	14	SCREW PLUG M24X1.5X20	VERSCHLUSSSCHRAUBE		
181	11835950	4	NON-RETURN VALVE	RUECKSCHLAGVENTIL		
182	11835951	12	PRESSURE FEEDER VALVE	DRUCKEINSPEISEVENTIL		
200	592309014	1	PRESSURE LIMITING CARTRIDGE ⇨ ❑ 33	DRUCKBEGRENZUNGSPATRON		
201	10101193	1	VALVE	VENTIL		
203	7026676	1	VALVE	VENTIL		
204	7623541	1	FLOW REGULATING CHECK VALVE	DROSSELRUECKSCHLAGVENTIL		
205	592309014	1	PRESSURE LIMITING CARTRIDGE ⇨ ❑ 33	DRUCKBEGRENZUNGSPATRON		
224	7024968	1	CONNECTION PIECE	ANSCHLUSSSTUECK		
230	592071014	1	NON-RETURN VALVE	RUECKSCHLAGVENTIL		
269	7026135	2	NOZZLE	DUESE		
271	7014257	1	NOZZLE	DUESE		
275	11234068	16	SCREW PLUG M14X1.5X41	VERSCHLUSSSCHRAUBE		
279	7371299	2	SCREW PLUG M14X1.5 ST	VERSCHLUSSSCHRAUBE		
285	11234129	1	REDUCING PIECE	REDUZIERSTUECK		
900	10349776	1	SEALING SET MONOBLOCK	DS MONOBLOCK		
901	10349716	1	SEALING SET MONOBLOCK	DS MONOBLOCK		
902	790579414	1	SEALING SET CPL	DS KPL		

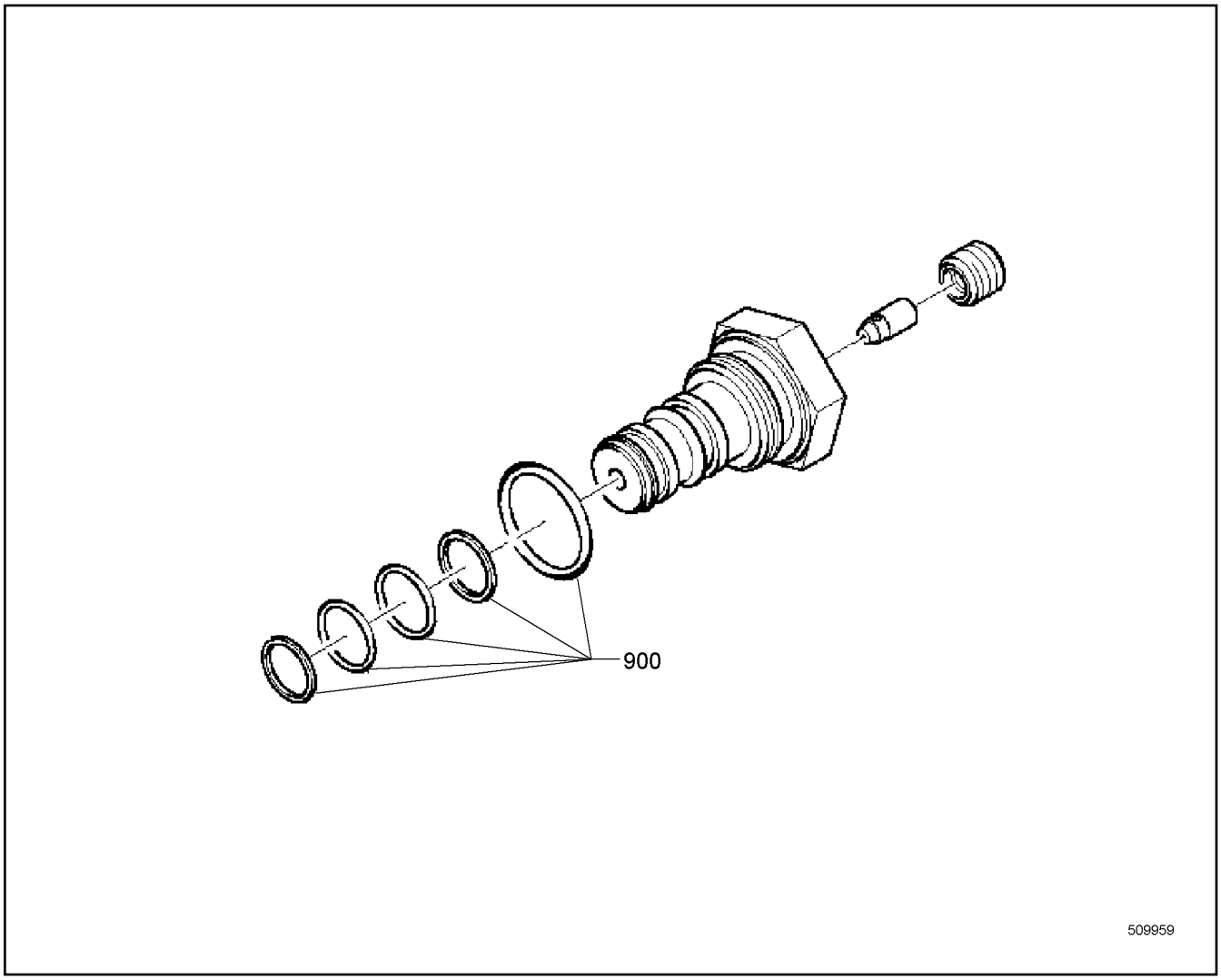

Pos.	Item	Quantity	Description	Bezeichnung	Serie	K
900	790545514	1	SEALING SET	DS		

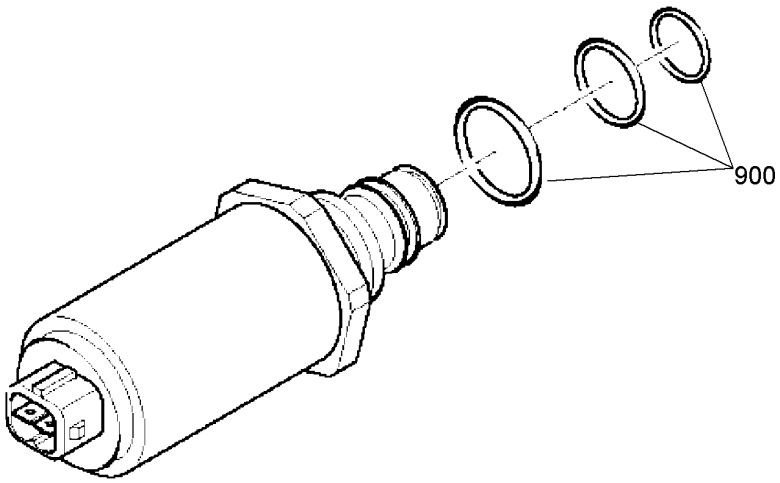

509958

Pos.	Item	Quantity	Description	Bezeichnung	Serie	K
900	790545514	1	SEALING SET	DS		

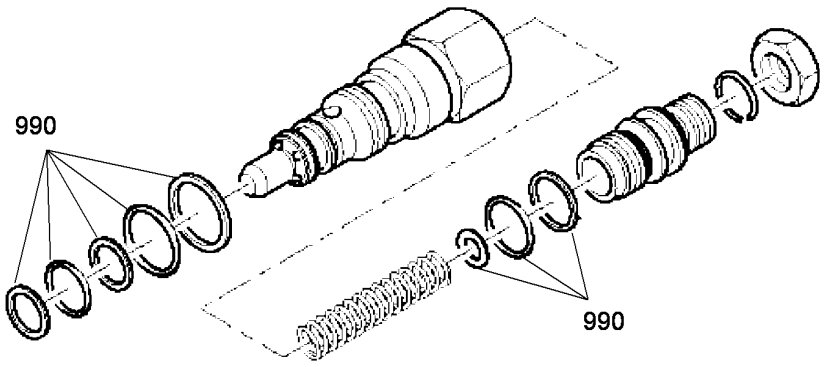

603475

Pos.	Item	Quantity	Description	Bezeichnung	Serie	K
990	790413614	1	SEALING SET	DS		

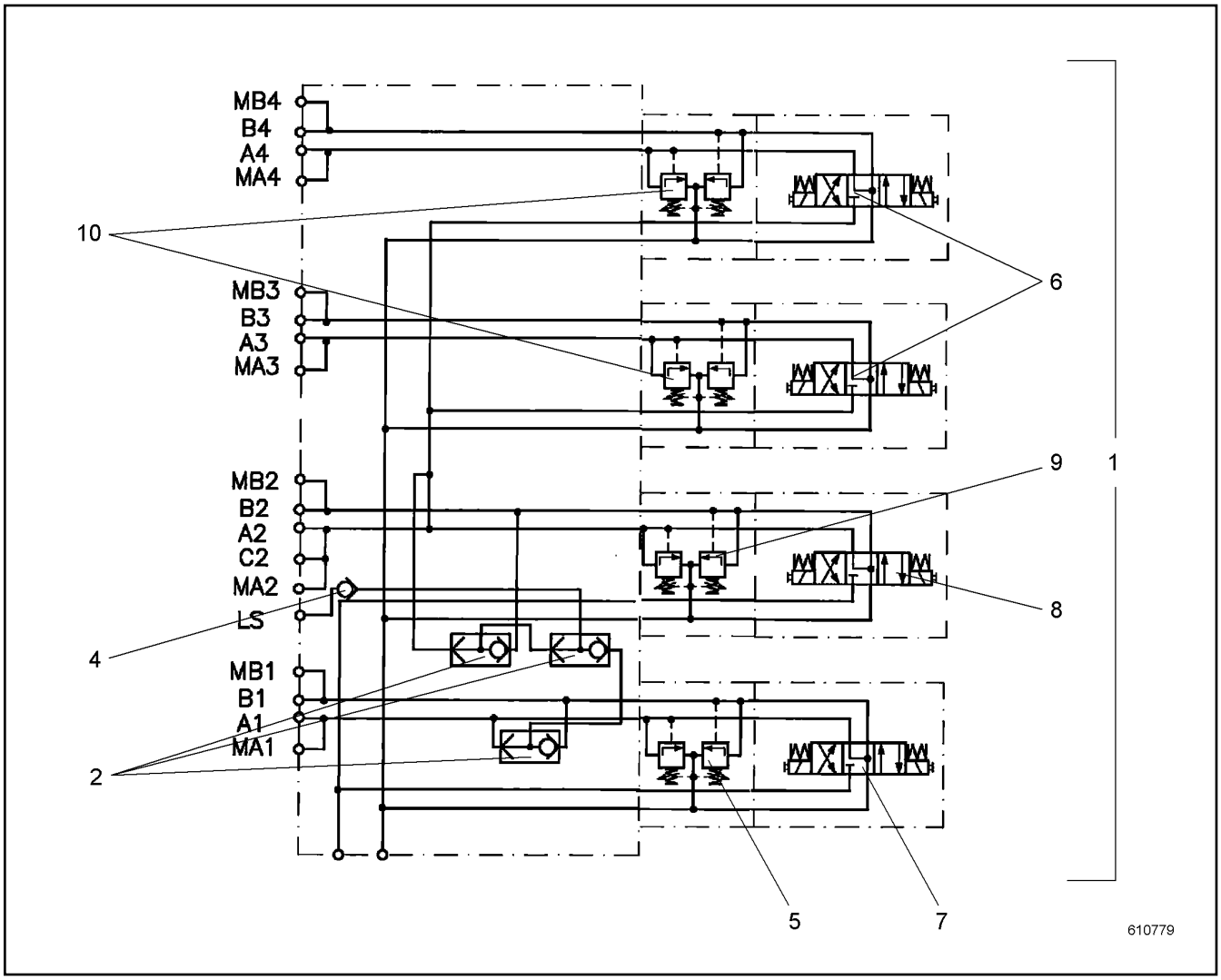

Pos.	Item	Quantity	Description	Bezeichnung	Serie	K
1	10524595	1	SEALING SET ⇨ ❑ 35	DS		
2	11938600	3	SHUTTLE VALVE	WECHSELVENTIL		
4	11229182	1	NON-RETURN VALVE	RUECKSCHLAGVENTIL		
5	11229183	1	PRESSURE VALVE	DRUCKVENTIL		
6	510427214	2	DIRECTIONAL CONTROL VALVE	WEGEVENTIL		
7	11229184	1	DIRECTIONAL CONTROL VALVE ⇨ ❑ 36	WEGEVENTIL		
8	10591435	1	DIRECTIONAL CONTROL VALVE ⇨ ❑ 37	WEGEVENTIL		
9	11229185	1	PRESSURE VALVE	DRUCKVENTIL		
10	10537607	2	DOUBLE PRESSURE LIMITING VALVE	DOPPELDRUCKBEGRENZUNGSV		

OHNE BILD
WITHOUT ILLUSTRATION
SANS PLANCHE
SIN FIG.
SEM ILUSTRAÇÃO
БЕЗ ИЗОБРАЖЕНИЯ

600000

Pos.	Item	Quantity	Description	Bezeichnung	Serie	K
1	10099037	24	FOUR LIPPED SEALS	VIERLIPPENDICHTUNG		
2	11301682	10	FOUR LIPPED SEALS	VIERLIPPENDICHTUNG		

OHNE BILD
WITHOUT ILLUSTRATION
SANS PLANCHE
SIN FIG.
SEM ILUSTRAÇÃO
БЕЗ ИЗОБРАЖЕНИЯ

600000

Pos.	Item	Quantity	Description	Bezeichnung	Serie	K
1	693208614	2	MAGNET COIL	MAGNETSPULE		

OHNE BILD
WITHOUT ILLUSTRATION
SANS PLANCHE
SIN FIG.
SEM ILUSTRAÇÃO
БЕЗ ИЗОБРАЖЕНИЯ

600000

Pos.	Item	Quantity	Description	Bezeichnung	Serie	K
1	11229186	2	MAGNET COIL	MAGNETSPULE		
900	10423993	1	SEALING SET	DS		

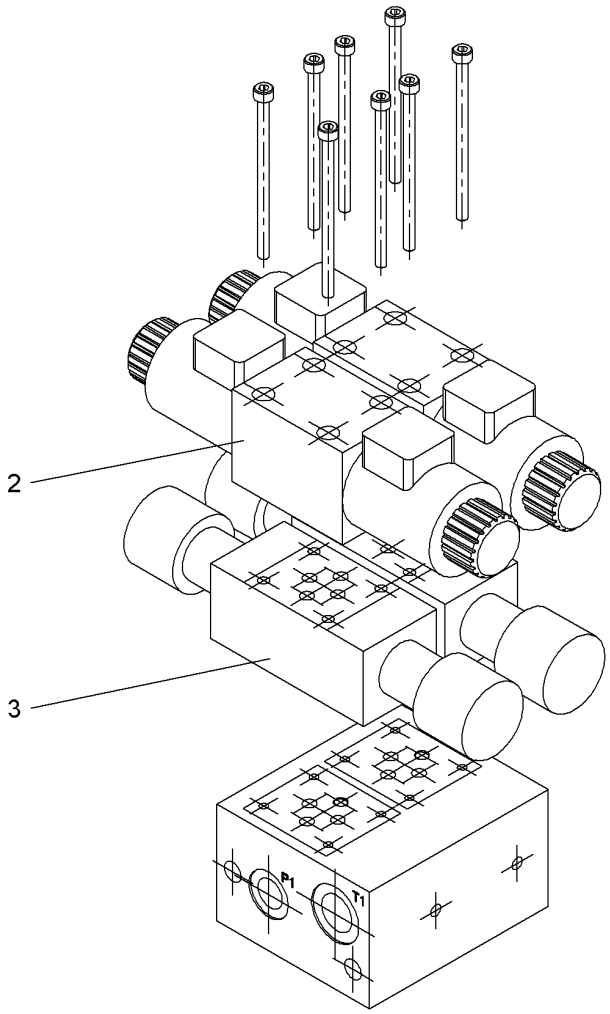

Pos.	Item	Quantity	Description	Bezeichnung	Serie	K
2	11223305	2	DIRECTIONAL CONTROL VALVE	WEGEVENTIL		
3	11293250	2	PRESSURE LIMITING VALVE	DRUCKBEGRENZUNGSVENTIL		

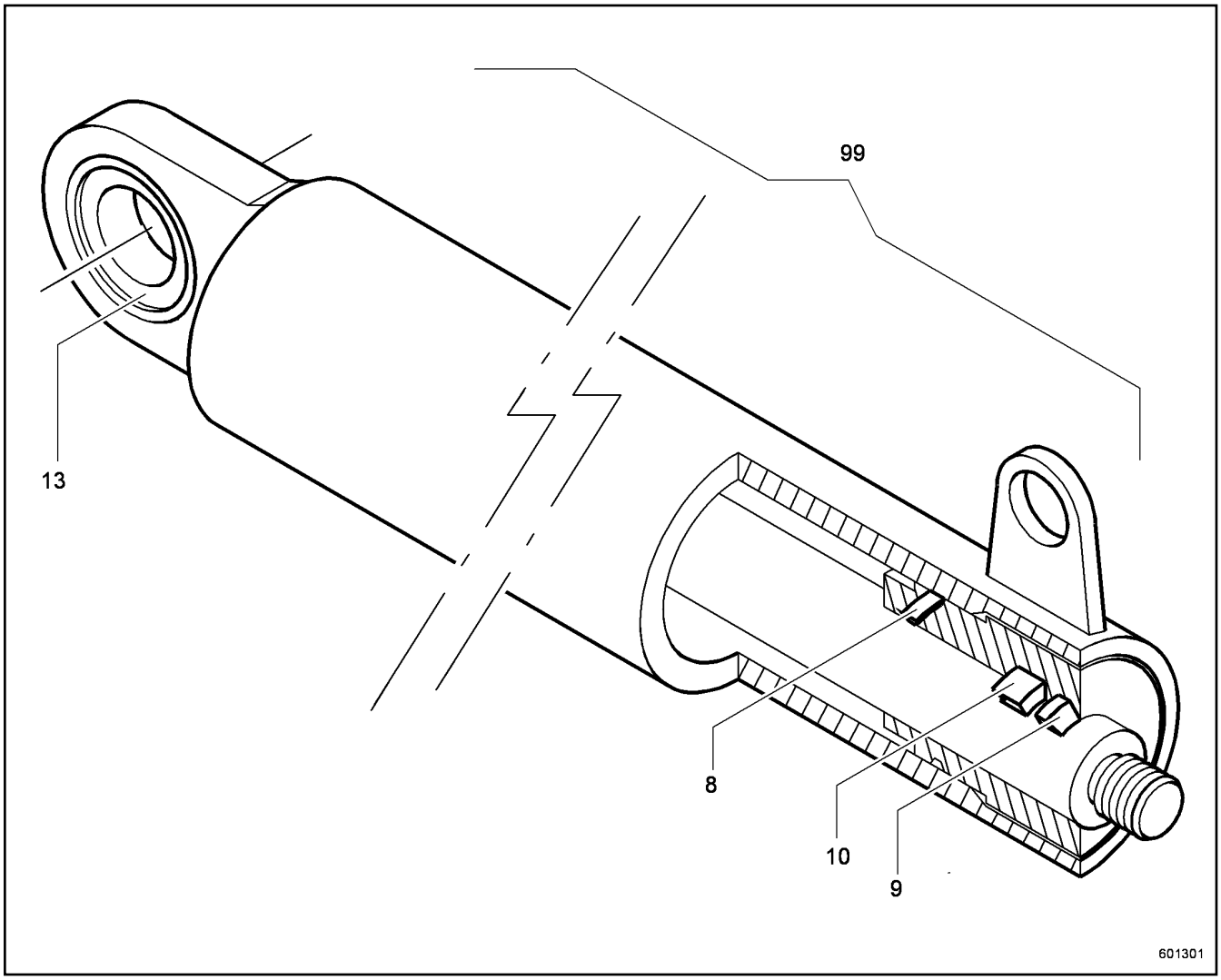

Pos.	Item	Quantity	Description	Bezeichnung	Serie	K
8	726456914	1	O-RING	O-RING		
9	726054414	1	SCRAPER RING	ABSTREIFRING		
10	726307914	1	ROD SEAL	NUTRING		
13	513319614	1	PIVOT HEAD	GELENKKOPF		
99	513319214	1	SEALING SET CPL CYL	DS KPL ZYL		

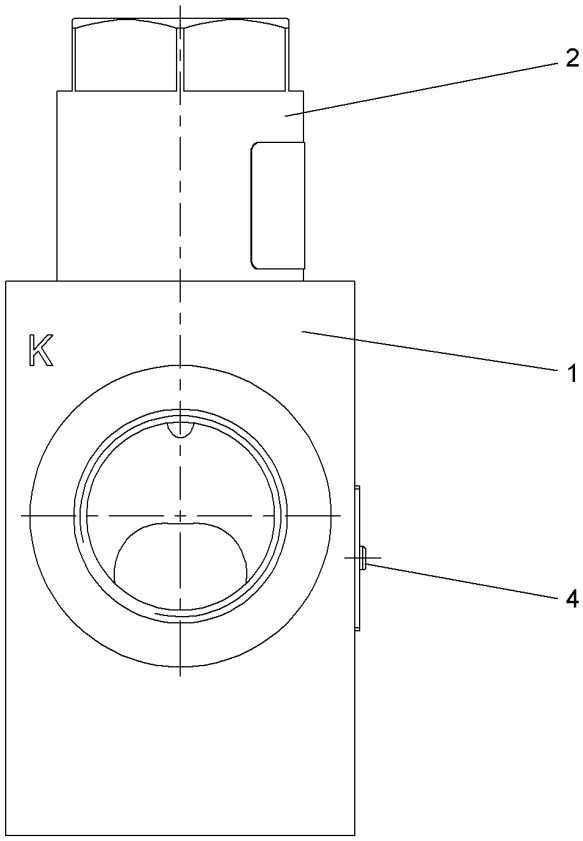

Pos.	Item	Quantity	Description	Bezeichnung	Serie	K
1	11932850	1	BODY	KOERPER		
2	11932853	1	VALVE	VENTIL		
4	7024631	2	SCREW DIN 7500C M2.5X5.3	SCHRAUBE		

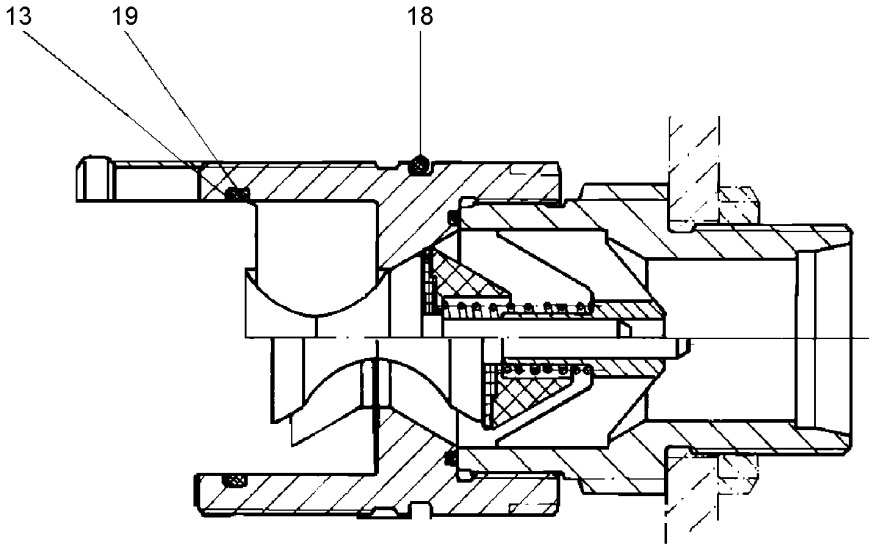

Pos.	Item	Quantity	Description	Bezeichnung	Serie	K
1	7615441	1	SOCKET DUST-PROOF	STAUBMUFFE		
13	511710314	1	SUPPORTING RING	STUETZRING		
18	726403514	1	O-RING	O-RING		
19	726408414	1	O-RING	O-RING		

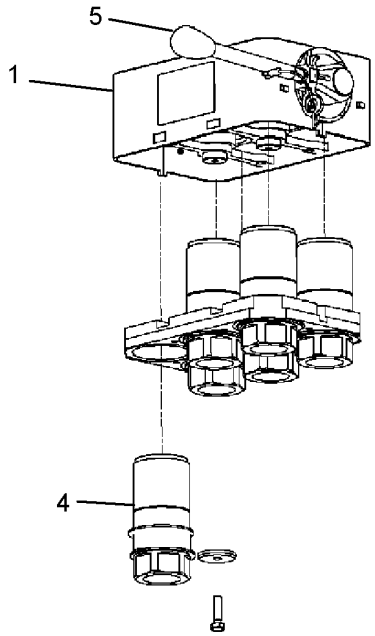

603339

Pos.	Item	Quantity	Description	Bezeichnung	Serie	K
1	10447745	1	HOUSING	GEHAEUSE		
4	10447748	6	SLEEVE	MUFFE		
5	10447749	1	LEVER	HEBEL		

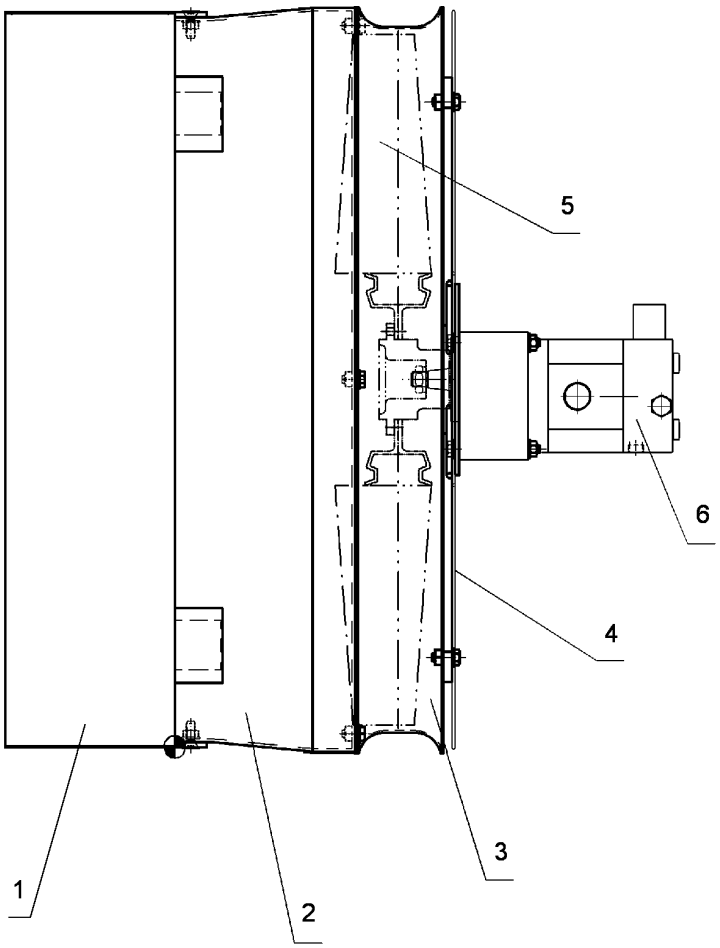

Pos.	Item	Quantity	Description	Bezeichnung	Serie	K
1	10352185	1	OIL COOLER	OELKUEHLER		
2	10352186	1	FAN COWL	LUEFTERHAUBE		
3	10352187	1	VENTILATOR RING	LUEFTERRING		
4	10566030	1	GUARD	SCHUTZGITTER		
5	10352188	1	FAN	LUEFTER		
6	550945314	1	OIL MOTOR ⇨ ❑ 44	OELMOTOR		

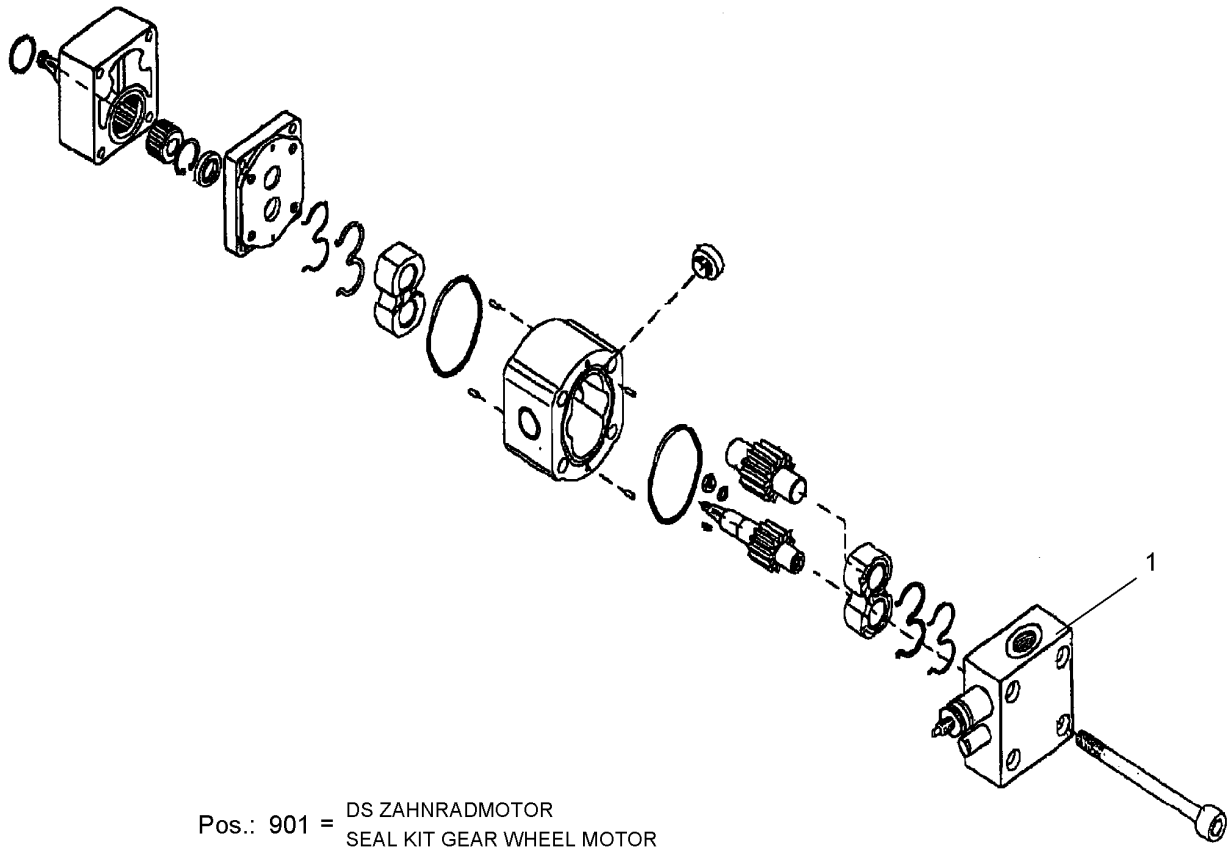

Pos.	Item	Quantity	Description	Bezeichnung	Serie	K
1	10501620	1	LID CPL	DECKEL KPL		
901	10493890	1	SEAL KIT GEAR WHEEL MOTOR	DS ZAHNRADMOTOR		

OHNE BILD
WITHOUT ILLUSTRATION
SANS PLANCHE
SIN FIG.
SEM ILUSTRAÇÃO
БЕЗ ИЗОБРАЖЕНИЯ

600000

Pos.	Item	Quantity	Description	Bezeichnung	Serie	K
11	11247121	1	CABLE LOOM W 2	KABELSTRANG W 2		
13	10563643	1	CABLE LOOM W 3	KABELSTRANG W 3		
21	10351656	1	CAN MODULE	CAN MODUL		
22	10351667	1	CAN MODULE	CAN MODUL		
23	10351660	1	CAN MODULE	CAN MODUL		
24	10351671	1	CAN MODULE	CAN MODUL		
26	10351668	1	CAN MODULE	CAN MODUL		
27	10351672	1	CAN MODULE	CAN MODUL		
28	10351674	1	CAN MODULE	CAN MODUL		
30	11229635	3	TERMINAL CAP	ENDPOL KAPPE		
31	10664204	2	BATTERY	BATTERIE		
32	10547876	2	BATTERY TERMINAL CLAMP	BATTERIEKLEMME		
33	10224316	1	BATTERY TERMINAL CLAMP	BATTERIEKLEMME		
34	10530489	1	FUSE HOLDER ⇨ ❑ 47	SICHERUNGSHALTER		
35	606070908	1	BATTERY MAIN SWITCH	BATTERIEHAUPTSCHALTER		
37	7412268	2	ELBOW PIECE	WINKELSTUECK		
39	10875360	3	EMERGENCY STOP BUTTON	NOT-AUS TASTER		
40	11241756	1	TEMPERATURE SENSOR	TEMPERATURFUEHLER		
41	11258086	1	CONTROL LIGHT	KONTROLLLEUCHTE		
42	11461533	1	NAMEPLATE ACCIDENT PREVENTION	SCHILD UNFALLVERHUETUNG		
43	606655108	1	LIMIT SENSOR	GRENZTASTER		
45	606281014	1	CAMS LIMIT SWITCH	NOCKENENDSCHALTER		
46	606281114	1	DRIVE FLANGE	ANTRIEBSFLANSCH		
50	10493626	1	TEMPERATURE SENSOR	TEMPERATURFUEHLER		
52	10288438	1	BACK-UP-ALARM	BACK-UP-ALARM		

OHNE BILD
WITHOUT ILLUSTRATION
SANS PLANCHE
SIN FIG.
SEM ILUSTRAÇÃO
БЕЗ ИЗОБРАЖЕНИЯ

600000

Pos.	Item	Quantity	Description	Bezeichnung	Serie	K
60	7027205	2	WORK LIGHT ⇨ ❑ 48	ARBEITSSCHEINWERFER		
61	10224272	2	HOLDER	HALTER		
65	11219179	2	PRESSURE SENSOR	DRUCKAUFNEHMER		
66	10515473	2	PRESSURE SENSOR	DRUCKAUFNEHMER		
71	10539250	1	KEY SWITCH	SCHLUESSELSCHALTER		
72	10595399	1	KEYRING PENDANT	SCHLUESSELANHAENGER		
73	773400308	0.25	STEEL WIRE ROPE	STAHLDRAHTSEIL		
74	602206514	2	CABLE LUG	KABELSCHUH		
81	10517426	1	LEVEL PROBE	NIVEAUSONDE		
91	918365114	1	BYPASS CONNECTOR	UEBERBRUECKUNGSSTECKER		
93	605604914	1	BS HOUSING	SOCKELGEHAEUSE		
94	605609514	1	FEMALE INSERT	BUCHSENEINSATZ		
100	10224500	4	WORK LIGHT ⇨ ❑ 49	ARBEITSSCHEINWERFER		
103	10566458	1	TERMINAL BOX ⇨ ❑ 50	KLEMMKASTEN		
111	11239082	1	CONTROL CONSOLE ⇨ ❑ 52	STEUERPULT		
131	10520078	1	SOCKET	STECKDOSE		

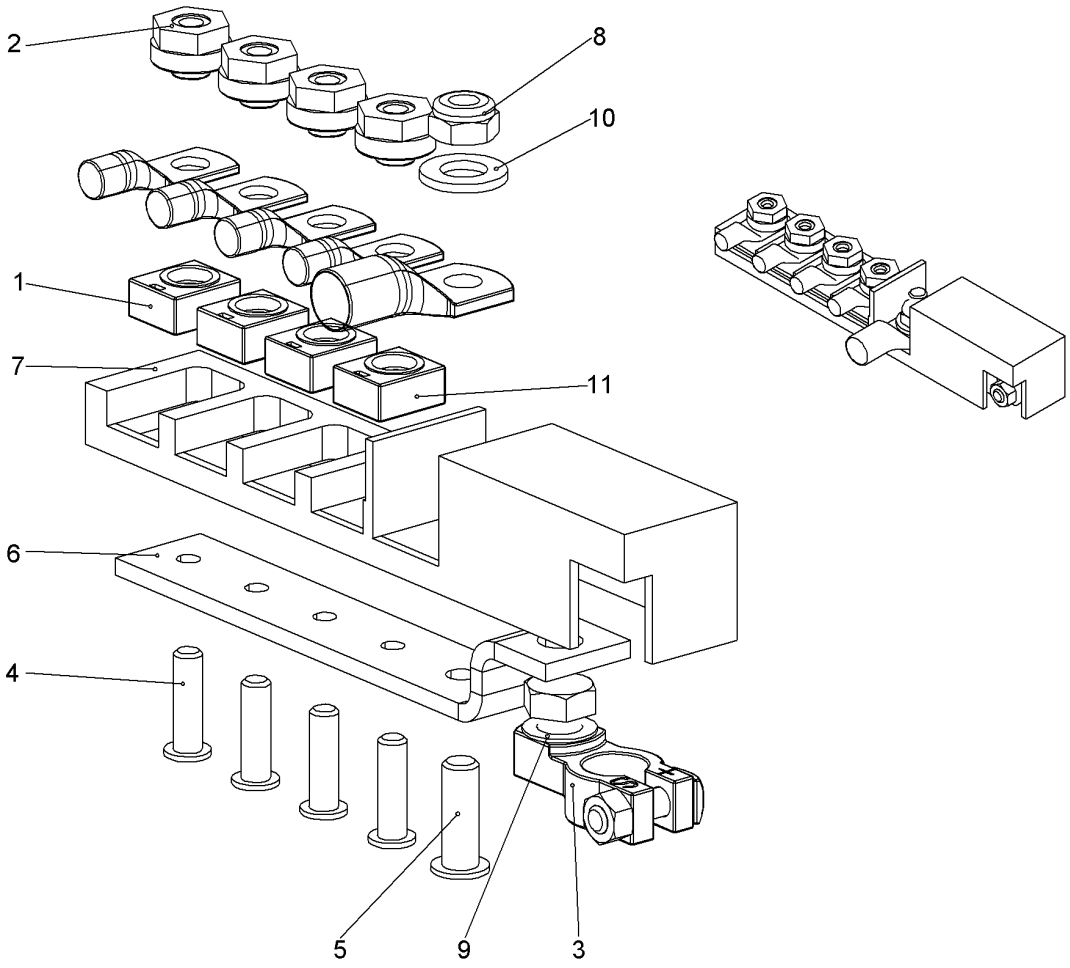

Pos.	Item	Quantity	Description	Bezeichnung	Serie	K
1	10224306	1	FUSE CARTRIDGE	SICHERUNGSEINSATZ		
3	10224316	1	BATTERY TERMINAL CLAMP	BATTERIEKLEMME		
4	10225045	4	SOCKET HEAD SCREW UN 1206 M8X30	ZYLINDERSCHRAUBE		
5	10502692	1	SCREW UN 1206 M10X30	SCHRAUBE		
6	10530486	1	FLAT COPPER EL	FLACHKUPFER EL		
7	10530487	1	COVER	ABDECKUNG		
8	411901114	1	HEX NUT DIN 985 M10 10	SECHSKANTMUTTER		
9	425221314	1	SERRATED LOCK WASHER DIN 6798 13	FAECHERSCHEIBE		
10	4901782	1	WASHER ISO 7089 12 A4	SCHEIBE		
11	10224307	3	FUSE CARTRIDGE	SICHERUNGSEINSATZ		

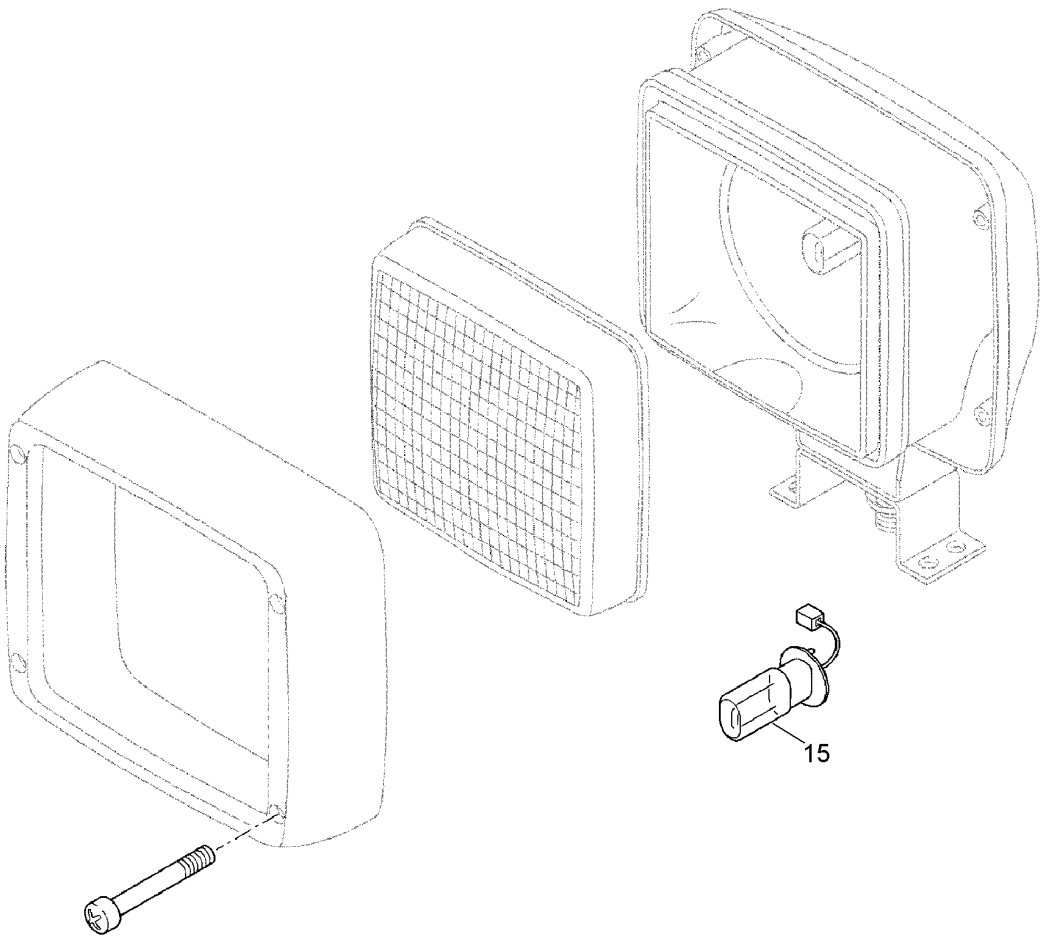

Pos.	Item	Quantity	Description	Bezeichnung	Serie	K
15	607021114	1	LIGHT BULB	GLUEHLAMPE		

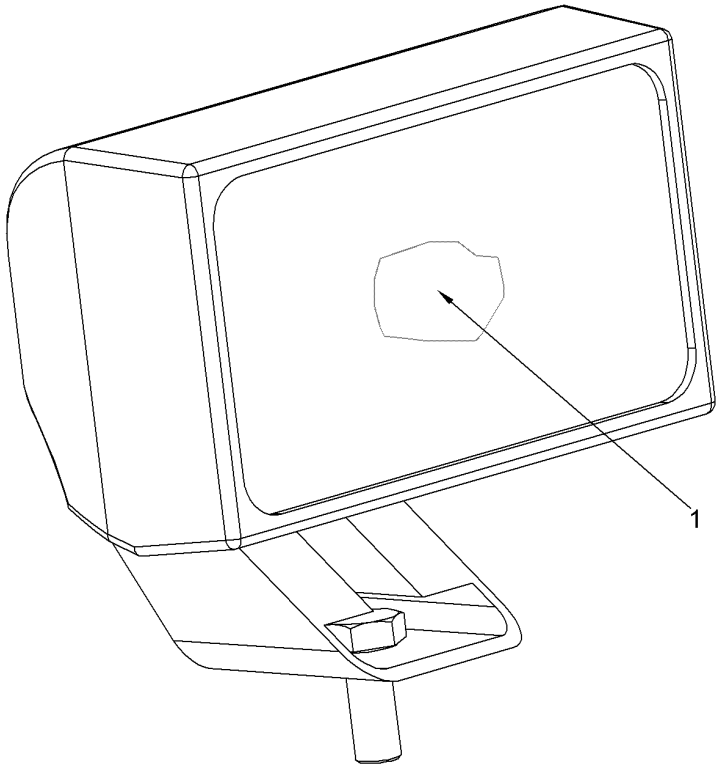

Pos.	Item	Quantity	Description	Bezeichnung	Serie	K
1	607021714	1	LIGHT BULB	GLUEHLAMPE		

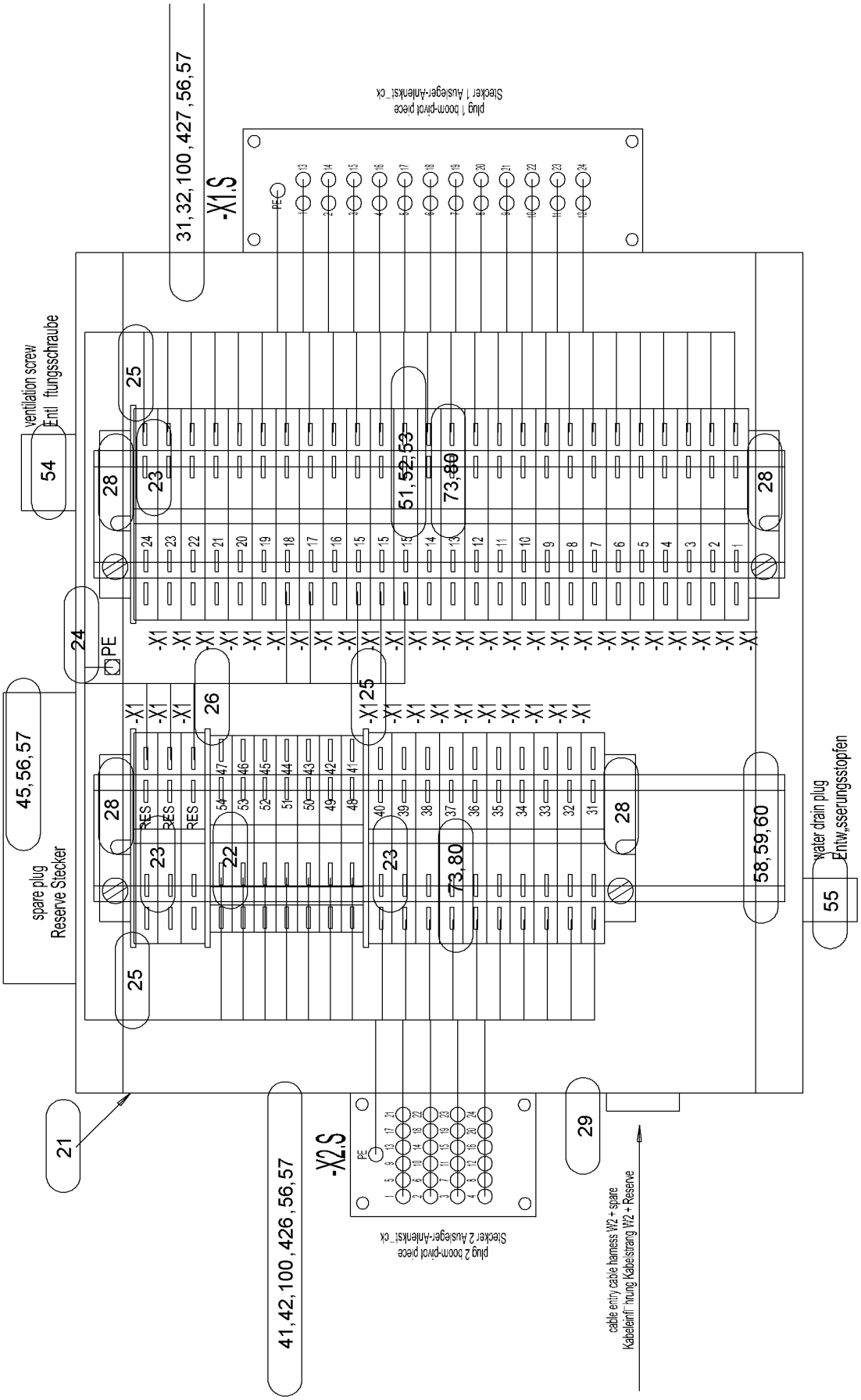
31,32,100,427,56,57
-X1.S
plug 1 boom-pivot piece
Stecker 1 Ausleger-Anlenkst._ck
ventilation screw
Entl ftungsschraube
54
25
28
23
24
PE
-X1
51,52,53
73,80
26
-X1.25
45,56,57
spare plug
Reserve Stecker
RES
22
58,59,60
water drain plug
Entw„sserungsstopfen
55
21
41,42,100,426,56,57
-X2.S
plug 2 boom-pivot piece
Stecker 2 Ausleger-Anlenkst._ck
29
cable entry cable harness W2 + spare
Kabeleinf ührung Kabelstrang W2 + Reserve
514896

Pos.	Item	Quantity	Description	Bezeichnung	Serie	K
21	918975514	1	HOUSING DRILLED	GEHAEUSE GEBOHRT		
22	602125114	7	SERIES TERMINAL	REIHENKLEMME		
23	602153814	39	SERIES TERMINAL	REIHENKLEMME		
24	602206114	1	CABLE LUG	KABELSCHUH		
25	602730714	3	CLOSING PLATE	ABSCHLUSSPLATTE		
26	602812714	1	CLOSING PLATE	ABSCHLUSSPLATTE		
28	602720514	4	END ANGLE	ENDWINKEL		
29	693061314	1	STOPPER PLUG	BLINDSTOPFEN		
31	10195680	1	ADD-ON HOUSING	ANBAUGEHAEUSE		
32	605609514	1	FEMALE INSERT	BUCHSENEINSATZ		
41	605613701	1	ADD-ON HOUSING	ANBAUGEHAEUSE		
42	605612014	1	FEMALE INSERT	BUCHSENEINSATZ		
45	693149814	1	ADD-ON HOUSING	ANBAUGEHAEUSE		
51	602731714	1	CROSS CONNECTOR	QUERVERBINDER		
52	602835914	1	DESIGNATION CARD	BEZEICHNUNGSKARTE		
54	485581914	1	VENTILATION SCREW	ENTLUEFTUNGSSCHRAUBE		
55	602501208	1	WATER DRAIN PLUG	ENTWAESSERUNGSSTOPFEN		
56	10507964	12	LOCKING RING 4	SICHERUNGSRING		
57	10539448	12	SOCKET HEAD SCREW ISO 4762 M4X12 A4-7	ZYLINDERSCHRAUBE		
58	602106714	0.37	CARRIER RAIL	TRAGSCHIENE		
59	602134114	4	FASTENING SCREW	BEF SCHRAUBE		
60	420000414	4	WASHER ISO 7089 6 A4	SCHEIBE		
73	602303214	1	RECEPTACLE	STECKHUELSE		
80	602209314	42	RECEPTACLE	STECKHUELSE		
100	602307708	2	WIRED END FERRULE	ADERENDHUELSE		
251	10870540	10.7	ELECTR.CABLE	KFZ-LEITUNG		
426	605610301	24	CONTACT BUSHING	KONTAKTBUCHSE		
427	605601801	24	CONTACT BUSHING	KONTAKTBUCHSE		

OHNE BILD
WITHOUT ILLUSTRATION
SANS PLANCHE
SIN FIG.
SEM ILUSTRAÇÃO
БЕЗ ИЗОБРАЖЕНИЯ

600000

Pos.	Item	Quantity	Description	Bezeichnung	Serie	K
10	11236937	1	CONTROL CONSOLE	STEUERPULT		
11	11239085	1	WIRING HARNESS	KABELSTRANG		

ACHTUNG !
ATTENTION !
ATTENTION !
ATENCIÓN !
ATENÇÃO !
ВНИМАНИЕ

Für Schlauchbestellungen kann über die Schlauchnummer, in der entsprechenden Schlauchliste, die Identnummer festgestellt werden.

For ordering flexible hoses you can find the identification number through the hose-number in the corresponding hose-list.

Pour des ordres de tuyau flexible le nombre d'identification on voit dans la liste de tuyau flexible correspondente.

Para el pedido de manguera, indicar el número de identificación de la manguera de la lista respectiva.

Para se encomendar uma mangueira, consulte o número de identificaçao na respectiva lista de mangueiras.

Для оформления заказов на шланги/рукавы идент. № может быть определен при помощи номера шланга/рукава, указанного в соотетствующем перечне шлангов/рукавов.

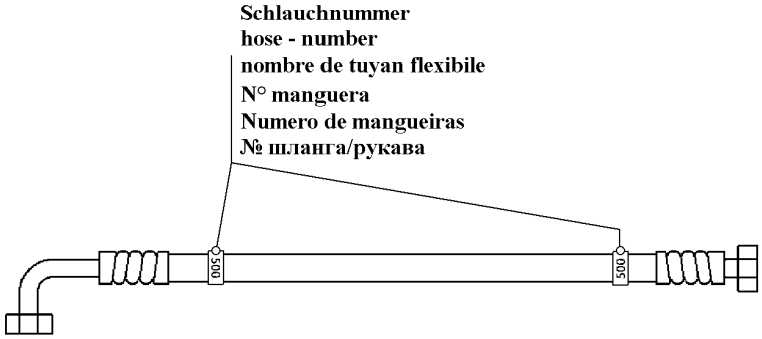

500000

Pos.	Item	Quantity	Description	Bezeichnung	Serie	K
415	996848514	1	HOSE CPL	SCHLAUCH KPL		
426	995962014	1	HOSE CPL	SCHLAUCH KPL		
428	928009314	1	HOSE CPL	SCHLAUCH KPL		
429	918291914	1	HOSE CPL	SCHLAUCH KPL		
431	928589814	1	HOSE CPL	SCHLAUCH KPL		
500	995972114	1	HOSE CPL	SCHLAUCH KPL		
501	995972214	1	HOSE CPL	SCHLAUCH KPL		
502	995972314	1	HOSE CPL	SCHLAUCH KPL		
503	995972414	1	HOSE CPL	SCHLAUCH KPL		
506	928183014	1	HOSE CPL	SCHLAUCH KPL		
507	996466614	1	HOSE CPL	SCHLAUCH KPL		
508	928765014	1	HOSE CPL	SCHLAUCH KPL		
509	991168714	1	HOSE CPL	SCHLAUCH KPL		
510	995972814	1	HOSE CPL	SCHLAUCH KPL		
511	928010214	1	HOSE CPL	SCHLAUCH KPL		
512	928010214	1	HOSE CPL	SCHLAUCH KPL		
513	928010214	1	HOSE CPL	SCHLAUCH KPL		
514	928010214	1	HOSE CPL	SCHLAUCH KPL		
515	995972914	1	HOSE CPL	SCHLAUCH KPL		
516	993657714	1	HOSE CPL	SCHLAUCH KPL		
517	995973814	1	HOSE CPL	SCHLAUCH KPL		
518	995973014	1	HOSE CPL	SCHLAUCH KPL		
519	994465914	1	HOSE CPL	SCHLAUCH KPL		
520	992261414	1	HOSE CPL	SCHLAUCH KPL		
521	995060114	1	HOSE CPL	SCHLAUCH KPL		
522	928443714	1	HOSE CPL	SCHLAUCH KPL		

ACHTUNG !
ATTENTION !
ATTENTION !
ATENCIÓN !
ATENÇÃO !
ВНИМАНИЕ

Für Schlauchbestellungen kann über die Schlauchnummer, in der entsprechenden Schlauchliste, die Identnummer festgestellt werden.

For ordering flexible hoses you can find the identification number through the hose-number in the corresponding hose-list.

Pour des ordres de tuyau flexible le nombre d'identification on voit dans la liste de tuyau flexible correspondente.

Para el pedido de manguera, indicar el número de identificación de la manguera de la lista respectiva.

Para se encomendar uma mangueira, consulte o número de identificaçao na respectiva lista de mangueiras.

Для оформления заказов на шланги/рукавы идент. № может быть определен при помощи номера шланга/рукава, указанного в соотетствующем перечне шлангов/рукавов.

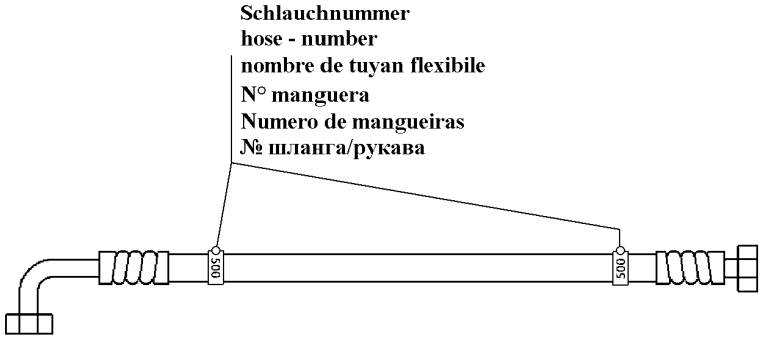

500000

Pos.	Item	Quantity	Description	Bezeichnung	Serie	K
523	995973214	1	HOSE CPL	SCHLAUCH KPL		
524	919735014	1	HOSE CPL	SCHLAUCH KPL		
525	928461114	1	HOSE CPL	SCHLAUCH KPL		
526	928456714	1	HOSE CPL	SCHLAUCH KPL		
527	919706714	1	HOSE CPL	SCHLAUCH KPL		
528	996037814	1	HOSE CPL	SCHLAUCH KPL		
529	996037914	1	HOSE CPL	SCHLAUCH KPL		
530	995973514	1	HOSE CPL	SCHLAUCH KPL		
531	995973614	1	HOSE CPL	SCHLAUCH KPL		
532	995027514	1	HOSE CPL	SCHLAUCH KPL		
533	919140514	1	HOSE CPL	SCHLAUCH KPL		
534	996466814	1	HOSE CPL	SCHLAUCH KPL		
535	993734014	1	HOSE CPL	SCHLAUCH KPL		
536	928445414	1	HOSE CPL	SCHLAUCH KPL		
537	993774614	1	HOSE CPL	SCHLAUCH KPL		
538	995176314	1	HOSE CPL	SCHLAUCH KPL		
539	995973714	1	HOSE CPL	SCHLAUCH KPL		
540	995207914	1	HOSE CPL	SCHLAUCH KPL		
541	996778614	1	HOSE CPL	SCHLAUCH KPL		
542	928018514	1	HOSE CPL	SCHLAUCH KPL		
543	919146814	1	HOSE CPL	SCHLAUCH KPL		
545	994460114	1	HOSE CPL	SCHLAUCH KPL		
546	928020314	1	HOSE CPL	SCHLAUCH KPL		
547	928032214	1	HOSE CPL	SCHLAUCH KPL		
548	928764814	1	HOSE CPL	SCHLAUCH KPL		
550	995974114	1	HOSE CPL	SCHLAUCH KPL		

ACHTUNG !
ATTENTION !
ATTENTION !
ATENCIÓN !
ATENÇÃO !
ВНИМАНИЕ

Für Schlauchbestellungen kann über die Schlauchnummer, in der entsprechenden Schlauchliste, die Identnummer festgestellt werden.

For ordering flexible hoses you can find the identification number through the hose-number in the corresponding hose-list.

Pour des ordres de tuyau flexible le nombre d'identification on voit dans la liste de tuyau flexible correspondente.

Para el pedido de manguera, indicar el número de identificación de la manguera de la lista respectiva.

Para se encomendar uma mangueira, consulte o número de identificaçao na respectiva lista de mangueiras.

Для оформления заказов на шланги/рукавы идент. № может быть определен при помощи номера шланга/рукава, указанного в соотетствующем перечне шлангов/рукавов.

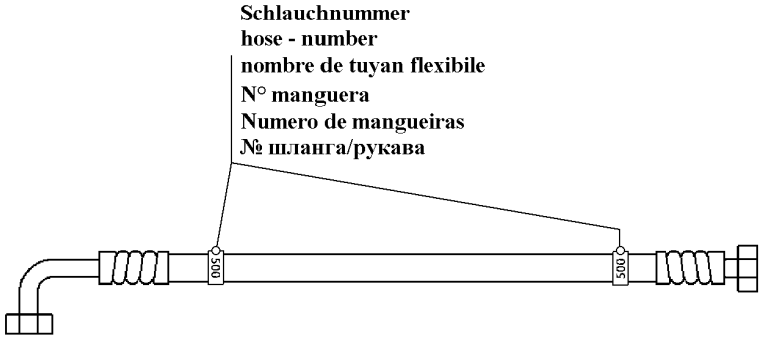

500000

Pos.	Item	Quantity	Description	Bezeichnung	Serie	K
551	914798914	1	HOSE CPL	SCHLAUCH KPL		
555	929414814	1	HOSE CPL	SCHLAUCH KPL		
556	918873814	1	HOSE CPL	SCHLAUCH KPL		
557	992569114	1	HOSE CPL	SCHLAUCH KPL		
558	995974214	1	HOSE CPL	SCHLAUCH KPL		
559	928885614	1	HOSE CPL	SCHLAUCH KPL		
561	995974414	1	HOSE CPL	SCHLAUCH KPL		
562	995974614	1	HOSE CPL	SCHLAUCH KPL		
563	995974714	1	HOSE CPL	SCHLAUCH KPL		
564	995974814	1	HOSE CPL	SCHLAUCH KPL		
565	995974914	1	HOSE CPL	SCHLAUCH KPL		
566	995264214	1	HOSE CPL	SCHLAUCH KPL		
567	996467014	1	HOSE CPL	SCHLAUCH KPL		
569	992258514	1	HOSE CPL	SCHLAUCH KPL		
575	914794514	1	HOSE CPL	SCHLAUCH KPL		
576	995440614	1	HOSE CPL	SCHLAUCH KPL		
577	992261314	1	HOSE CPL	SCHLAUCH KPL		
578	995006114	1	HOSE CPL	SCHLAUCH KPL		
579	991253814	1	HOSE CPL	SCHLAUCH KPL		
580	928123014	1	HOSE CPL	SCHLAUCH KPL		
581	919714914	1	HOSE CPL	SCHLAUCH KPL		
582	929473314	1	HOSE CPL	SCHLAUCH KPL		
583	990038114	1	HOSE CPL	SCHLAUCH KPL		
584	928110014	1	HOSE CPL	SCHLAUCH KPL		
585	928357214	1	HOSE CPL	SCHLAUCH KPL		
586	991528514	1	HOSE CPL	SCHLAUCH KPL		

ACHTUNG !
ATTENTION !
ATTENTION !
ATENCIÓN !
ATENÇÃO !
ВНИМАНИЕ

Für Schlauchbestellungen kann über die Schlauchnummer, in der entsprechenden Schlauchliste, die Identnummer festgestellt werden.

For ordering flexible hoses you can find the identification number through the hose-number in the corresponding hose-list.

Pour des ordres de tuyau flexible le nombre d'identification on voit dans la liste de tuyau flexible correspondente.

Para el pedido de manguera, indicar el número de identificación de la manguera de la lista respectiva.

Para se encomendar uma mangueira, consulte o número de identificaçao na respectiva lista de mangueiras.

Для оформления заказов на шланги/рукавы идент. № может быть определен при помощи номера шланга/рукава, указанного в соотетствующем перечне шлангов/рукавов.

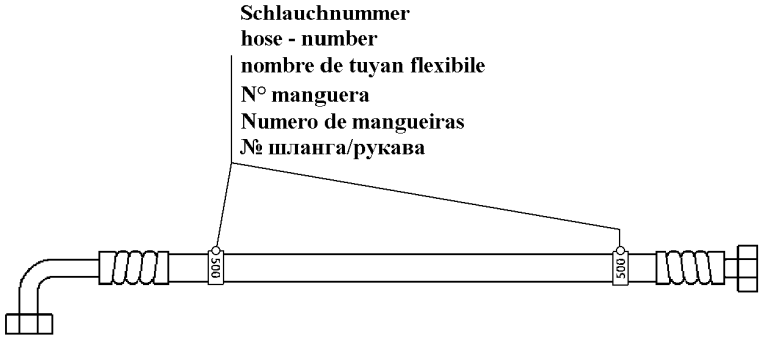

500000

Pos.	Item	Quantity	Description	Bezeichnung	Serie	K
587	991375814	1	HOSE CPL	SCHLAUCH KPL		
590	996467114	1	HOSE CPL	SCHLAUCH KPL		
591	992298714	1	HOSE CPL	SCHLAUCH KPL		
592	914762914	1	HOSE CPL	SCHLAUCH KPL		
594	992519014	1	HOSE CPL	SCHLAUCH KPL		
595	918810914	1	HOSE CPL	SCHLAUCH KPL		
596	911256414	1	HOSE CPL	SCHLAUCH KPL		
597	928712614	1	HOSE CPL	SCHLAUCH KPL		
598	918285814	1	HOSE CPL	SCHLAUCH KPL		
5020	991209514	1	HOSE CPL	SCHLAUCH KPL		
5021	993775014	1	HOSE CPL	SCHLAUCH KPL		
5022	914792514	1	HOSE CPL	SCHLAUCH KPL		
5023	995976414	1	HOSE CPL	SCHLAUCH KPL		
5024	995976414	1	HOSE CPL	SCHLAUCH KPL		
5025	995976514	1	HOSE CPL	SCHLAUCH KPL		
5026	995976514	1	HOSE CPL	SCHLAUCH KPL		

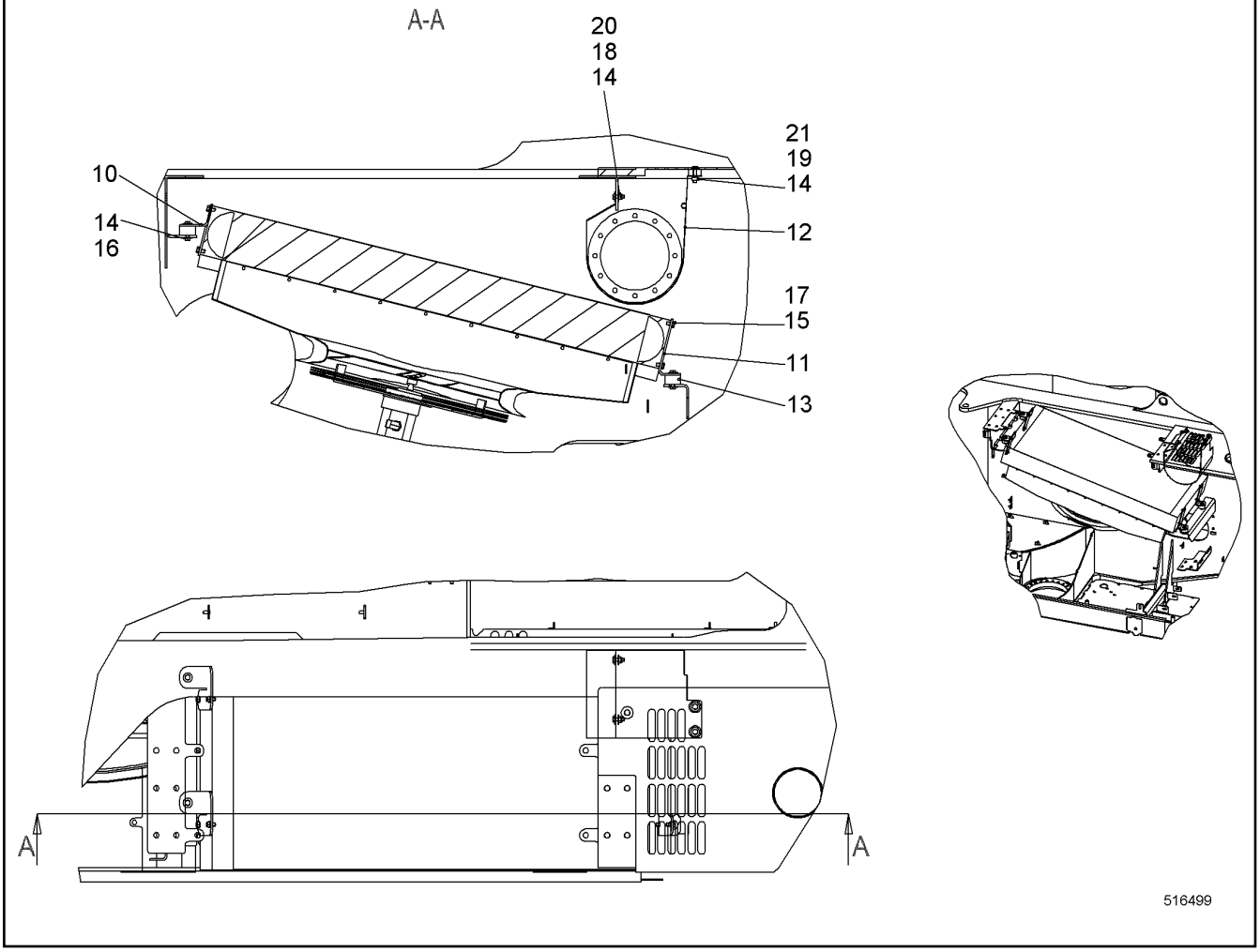

Pos.	Item	Quantity	Description	Bezeichnung	Serie	K
10	10336583	2	BRACKET	BUEGEL		
11	10336584	2	BRACKET	BUEGEL		
12	10580585	1	PROTECTION GUARD	SCHUTZBLECH		
13	726922214	4	RUBBER MOUNT	LAGER GUMMI		
14	10540511	14	WASHER ISO 7093-1 10 A4	SCHEIBE		
15	420001114	8	WASHER ISO 7089 10 A4	SCHEIBE		
16	406527414	8	HEX SCREW ISO 4017 M10X18 A4-70	SECHSKANTSCHRAUBE		
17	406518714	8	HEX SCREW ISO 4017 M10X20 A4-70	SECHSKANTSCHRAUBE		
18	406511614	2	HEX SCREW ISO 4017 M10X30 A4-70	SECHSKANTSCHRAUBE		
19	406512014	2	HEX SCREW ISO 4017 M10X45 A4-70	SECHSKANTSCHRAUBE		
20	10540494	2	HEX NUT ISO 10511 M10 A4	SECHSKANTMUTTER		
21	485549914	2	CAGE NUT M10-RR-140-47	KAEFIGMUTTER		

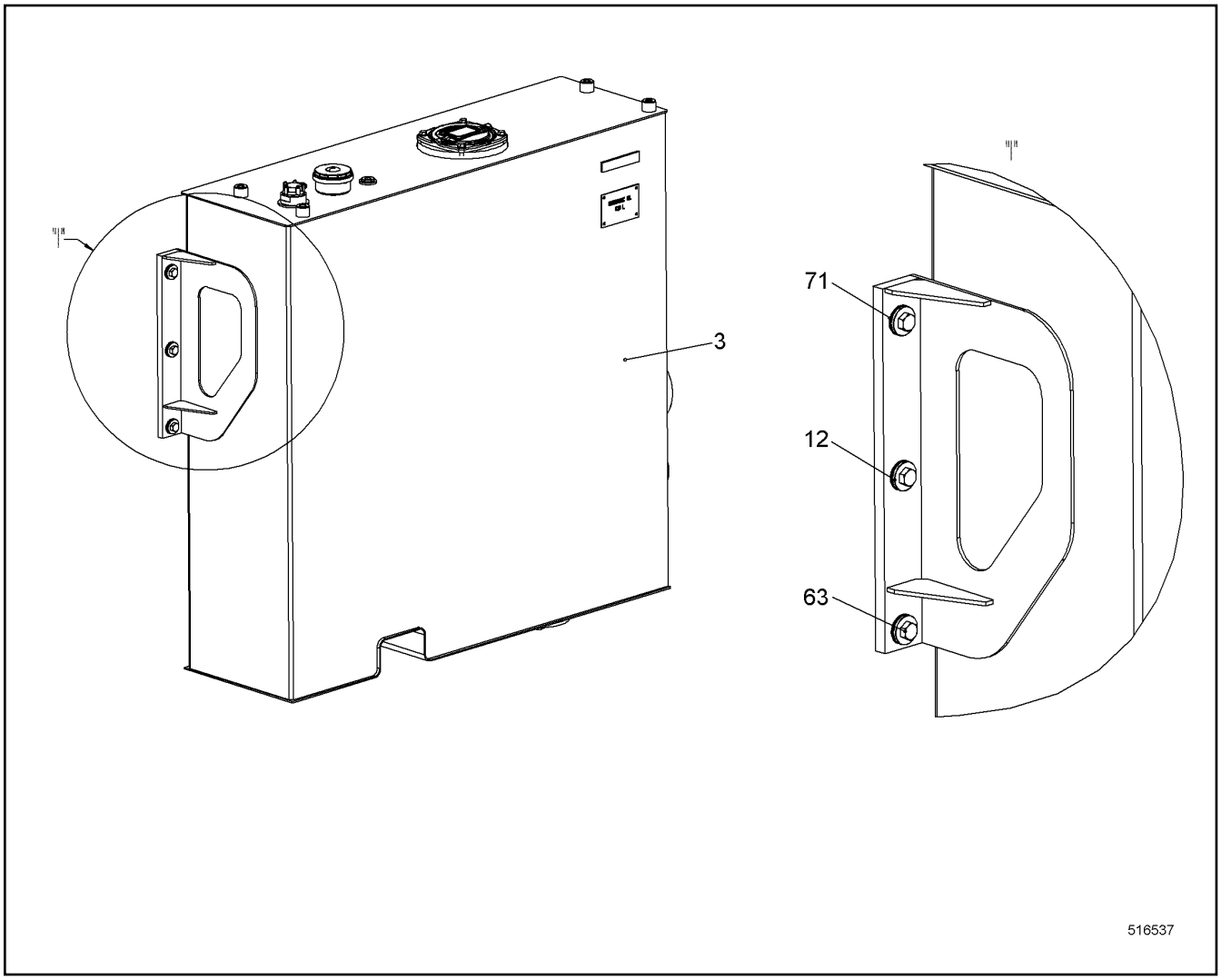

Pos.	Item	Quantity	Description	Bezeichnung	Serie	K
3	10560701	1	TANK HYDR CPL ⇨ ❑ 59	TANK HYDR KPL		
12	10588730	3	BUSHING EN 10060 17.5X26.5X29 S355J2;EN	BUCHSE		
62	10543903	3	HEX SCREW ISO 4017 M16X50 10.9	SECHSKANTSCHRAUBE		
63	10543904	3	HEX SCREW ISO 4017 M16X55 10.9	SECHSKANTSCHRAUBE		
70	421300414	3	WASHER DIN 6340 17 C35	SCHEIBE		

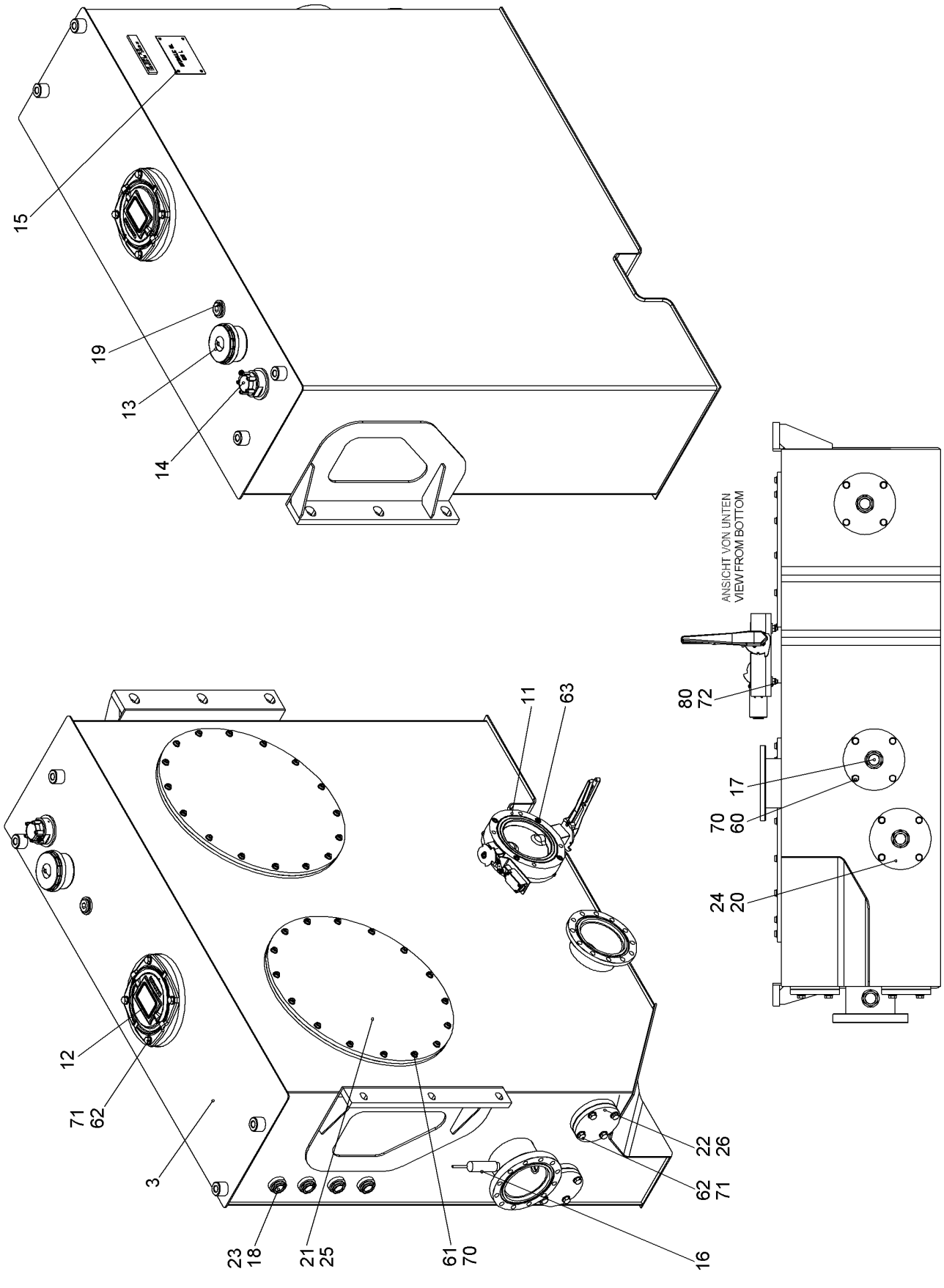
15
19
13
14
ANSICHT VON UNTEN
VIEW FROM BOTTOM
80
72
70
60
17
24
20
11
63
12
71
62
3
23
18
21
25
61
70
16
62
71
22
26
516538

Pos.	Item	Quantity	Description	Bezeichnung	Serie	K
3	10560703	1	TANK HYDR ST.CONST.	TANK HYDR SCHWK		
11	10526733	1	SHUT OFF DEVICE ⇨ ❑ 61	ABSPERRORGAN		
12	10515724	1	RETURN FILTER ⇨ ❑ 62	RUECKLAUFFILTER		
13	510690614	1	AERATION FILTER ⇨ ❑ 63	BELUEFTUNGSFILTER		
14	10529210	1	LEVEL SENSOR	NIVEAUGEBER		
15	10584544	1	SIGN	SCHILD		
16	10352111	1	PRESSURE SWITCH	DRUCKSCHALTER		
17	403900714	4	OIL DRAIN PLUG G1"X11 MS	OELABLASSSCHRAUBE		
18	5106280	4	OIL SIGHT GLASS	OELSTANDSAUGE		
19	477704614	1	FITTING	VERSCHRAUBUNG		
21	942264714	2	COVER	DECKEL		
22	552066514	2	FLANGE	FLANSCH		
23	7101022	4	SEALING RING	DICHTRING		
24	726409814	3	O-RING	O-RING		
25	726428714	2	O-RING	O-RING		
26	552006114	2	SEAL	DICHTUNG		
60	406511914	12	HEX SCREW ISO 4017 M10X25 A4-70	SECHSKANTSCHRAUBE		
61	4072083	32	SOCKET HEAD SCREW DIN 7984 M10X25 08.8	ZYLINDERSCHRAUBE		
62	406517314	12	HEX SCREW ISO 4017 M12X30 A4-70	SECHSKANTSCHRAUBE		
63	4630200	4	SOCKET HEAD SCREW ISO 4762 M10X65 10.9	ZYLINDERSCHRAUBE		
70	420001114	44	WASHER ISO 7089 10 A4	SCHEIBE		
71	4901782	12	WASHER ISO 7089 12 A4	SCHEIBE		
72	421300214	4	WASHER DIN 6340 10.5 C35	SCHEIBE		
80	10540494	4	HEX NUT ISO 10511 M10 A4	SECHSKANTMUTTER		

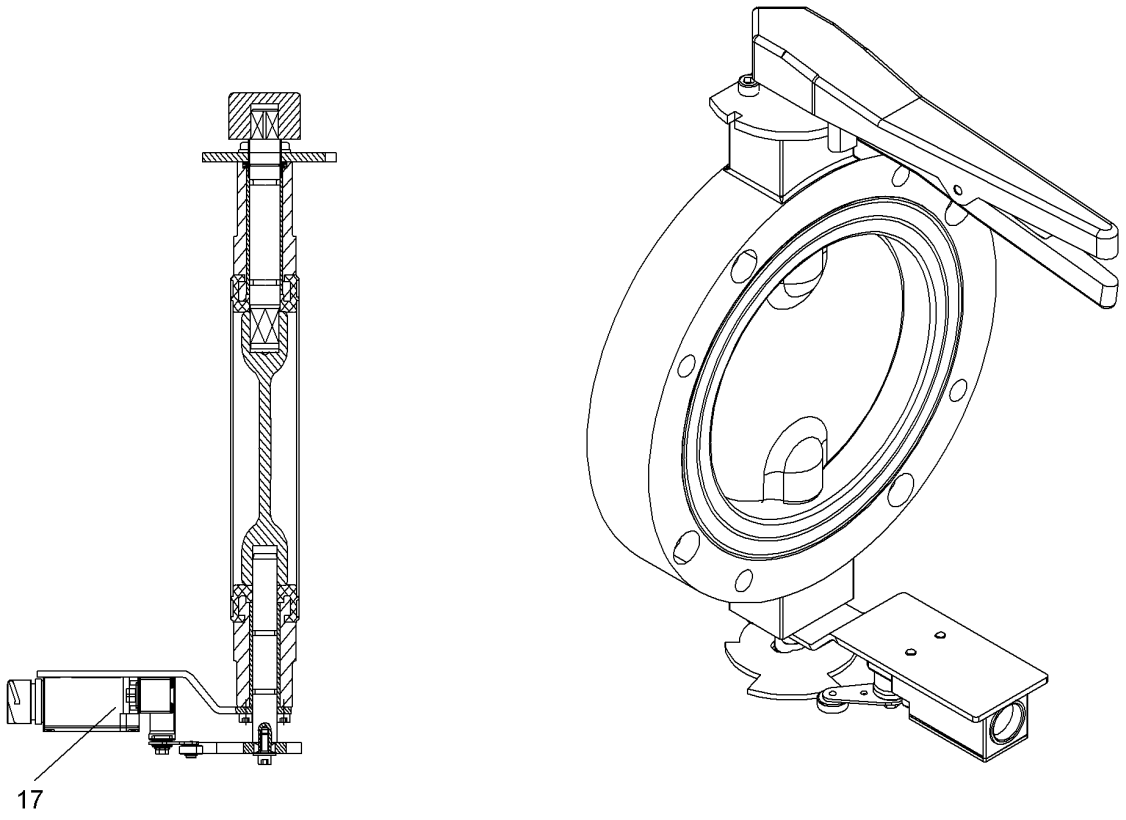

Pos.	Item	Quantity	Description	Bezeichnung	Serie	K
17	11921102	1	LIMIT SWITCH	ENDSCHALTER		

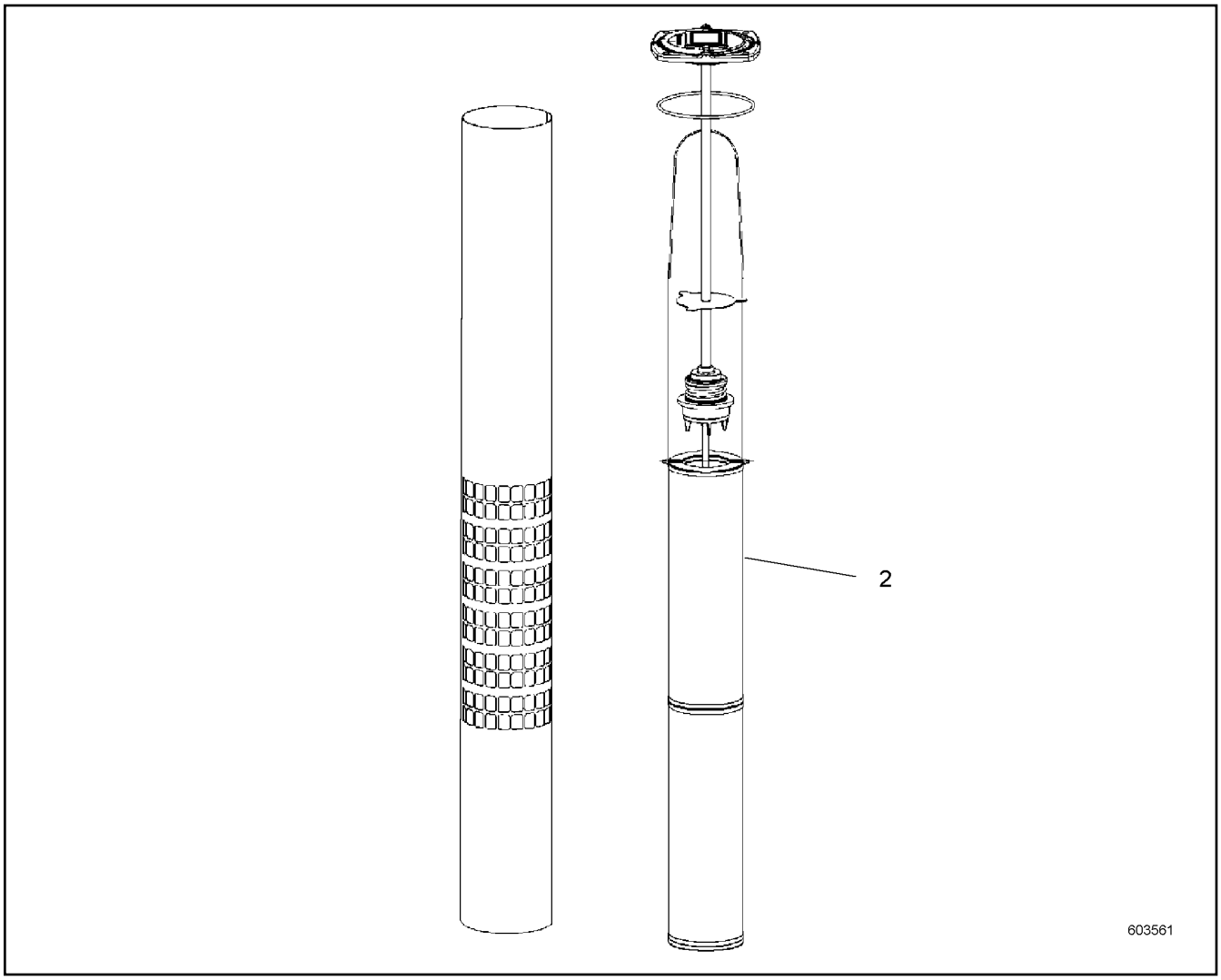

Pos.	Item	Quantity	Description	Bezeichnung	Serie	K
1	11227203	1	FILTER INSERT	FILTEREINSATZ		
3	10218953	1	O-RING	O-RING		

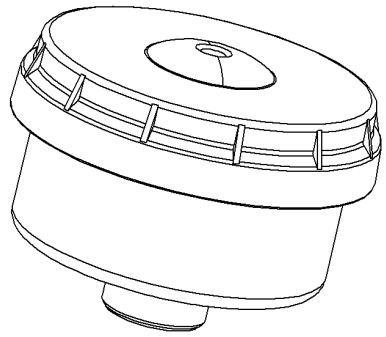

604282

Pos.	Item	Quantity	Description	Bezeichnung	Serie	K
1	510713814	1	FILTER ELEMENT	FILTERELEMENT		

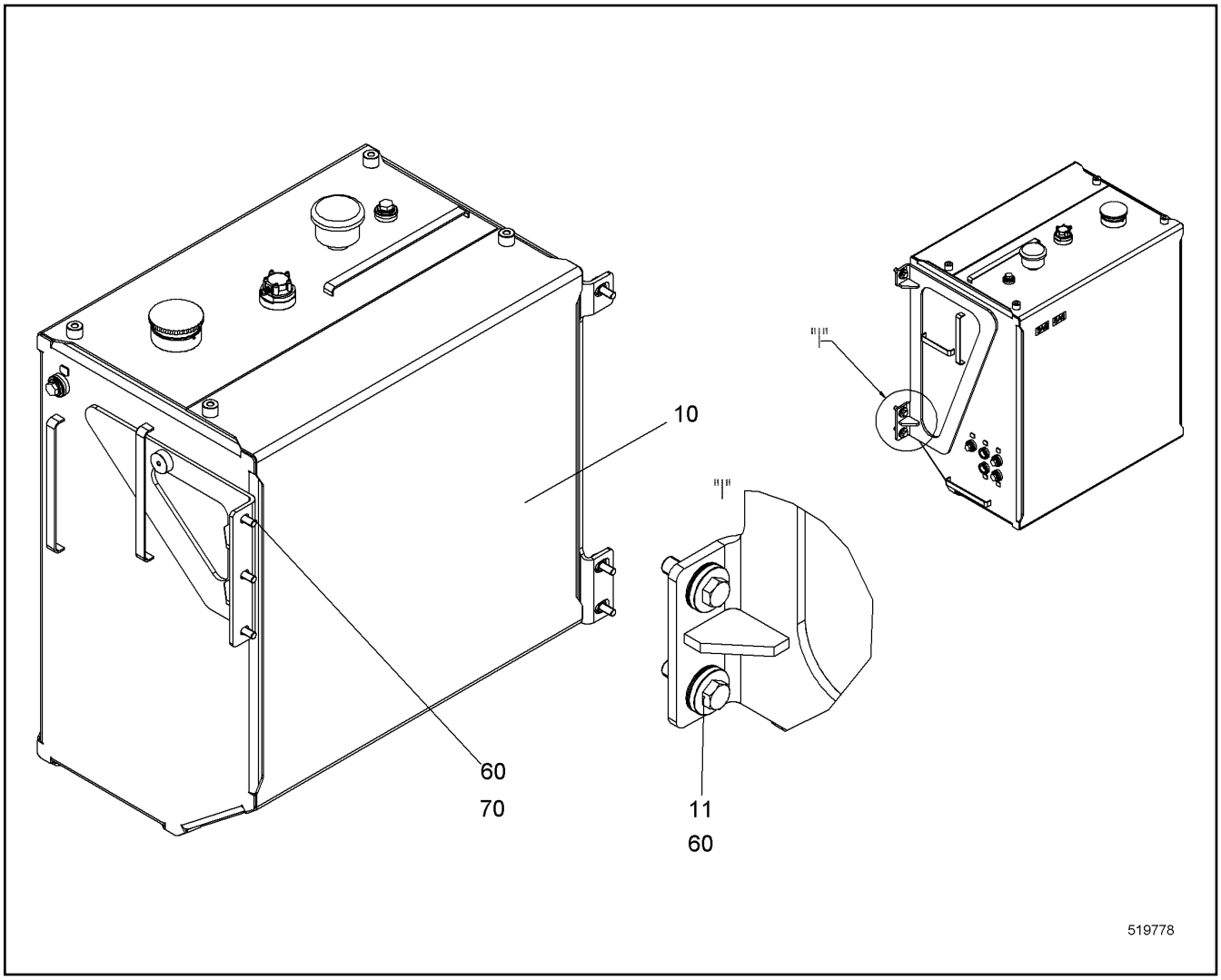

Pos.	Item	Quantity	Description	Bezeichnung	Serie	K
10	10560733	1	FUEL TANK CPL ⇨ ❑ 65	KRAFTSTOFFTANK KPL		
11	959019014	3	BUSHING	BUCHSE		
60	10539317	6	HEX SCREW ISO 4017 M16X35 10.9	SECHSKANTSCHRAUBE		
70	421300414	3	WASHER DIN 6340 17 C35	SCHEIBE		

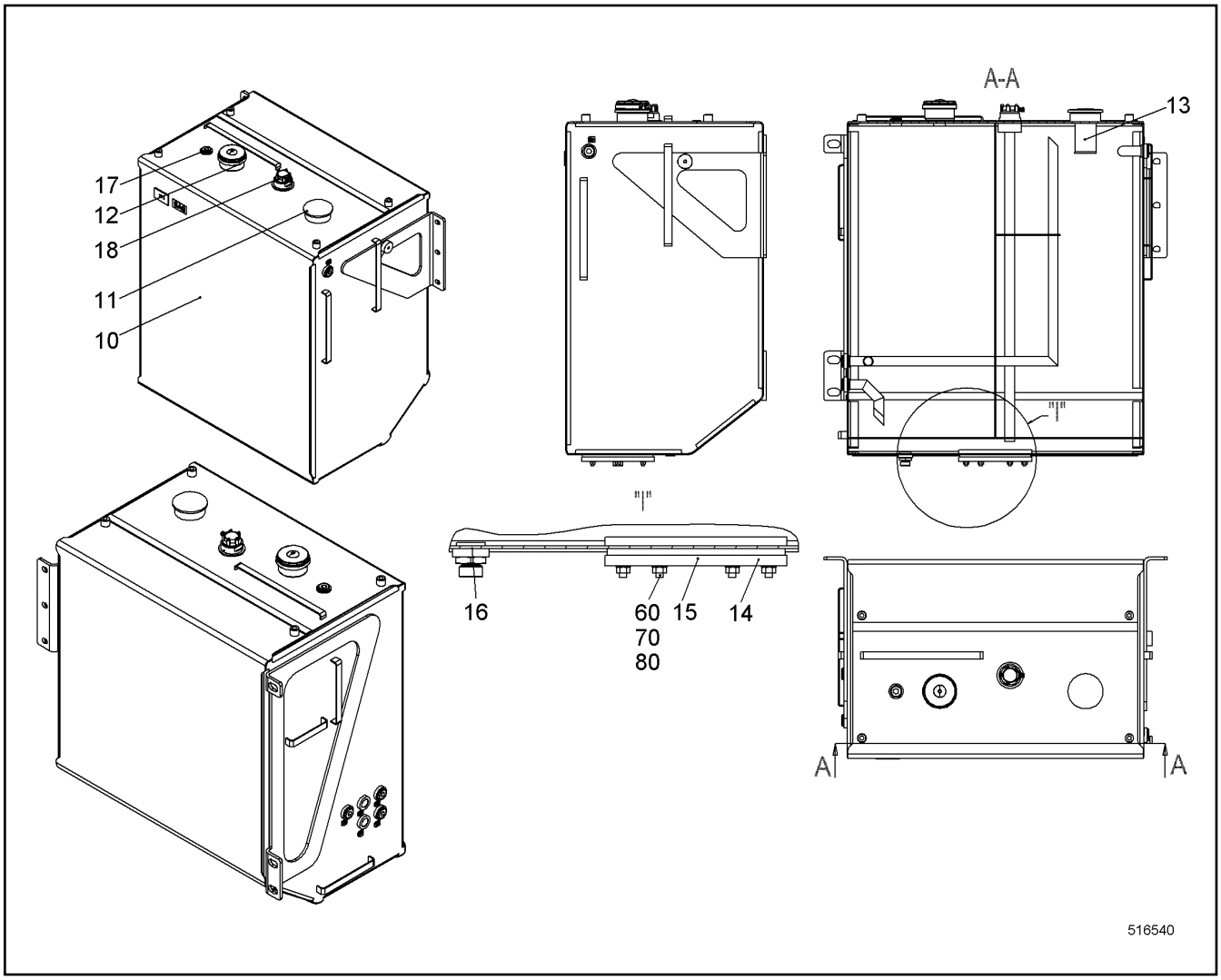

Pos.	Item	Quantity	Description	Bezeichnung	Serie	K
10	10560734	1	FUEL TANK ST.CONST.	KRAFTSTOFFTANK SCHWK		
11	7365412	1	LOCKABLE TANK CAP	TANKVERSCHLUSS		
12	11280868	1	AERATION FILTER ⇨ ❑ 66	BELUEFTUNGSFILTER		
13	10296919	1	FILLER SIEVE	EINFUELLSIEB		
14	10520927	1	COVER	DECKEL		
15	726401514	1	O-RING	O-RING		
16	403900714	1	OIL DRAIN PLUG G1"X11 MS	OELABLASSSCHRAUBE		
17	477704614	5	FITTING	VERSCHRAUBUNG		
18	10528589	1	LEVEL SENSOR	NIVEAUGEBER		
60	4068017	6	DOUBLE-ENDED STUD DIN 939 M10X30 8.8	STIFTSCHRAUBE		
70	420001114	6	WASHER ISO 7089 10 A4	SCHEIBE		
80	411514614	6	HEX NUT ISO 4032 M10 A4-70	SECHSKANTMUTTER		

OHNE BILD
WITHOUT ILLUSTRATION
SANS PLANCHE
SIN FIG.
SEM ILUSTRAÇÃO
БЕЗ ИЗОБРАЖЕНИЯ

600000

Pos.	Item	Quantity	Description	Bezeichnung	Serie	K
1	10350585	1	PAPER FLEECE	PAPIERVLIES		

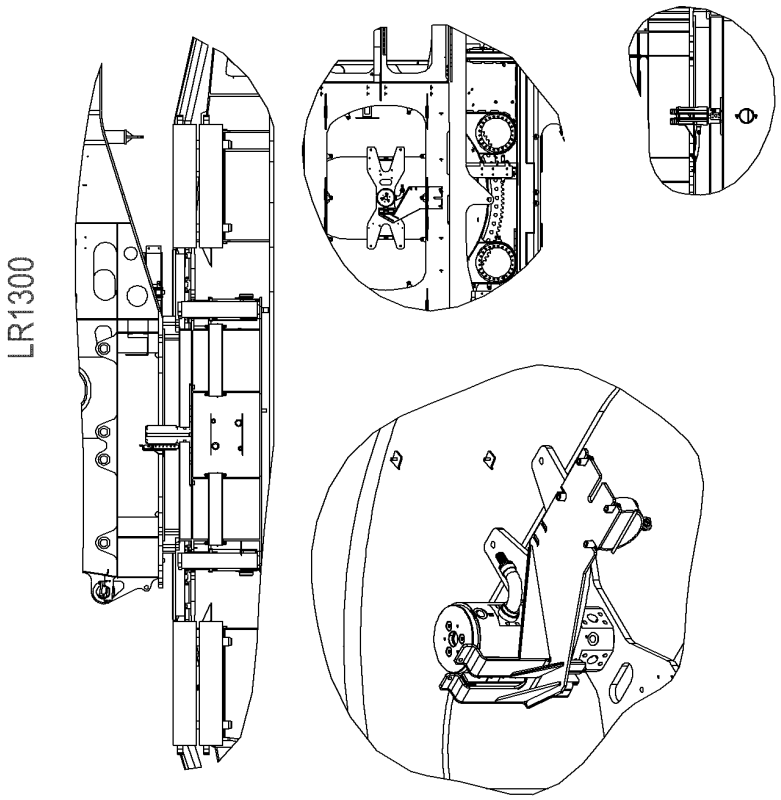
LR1300

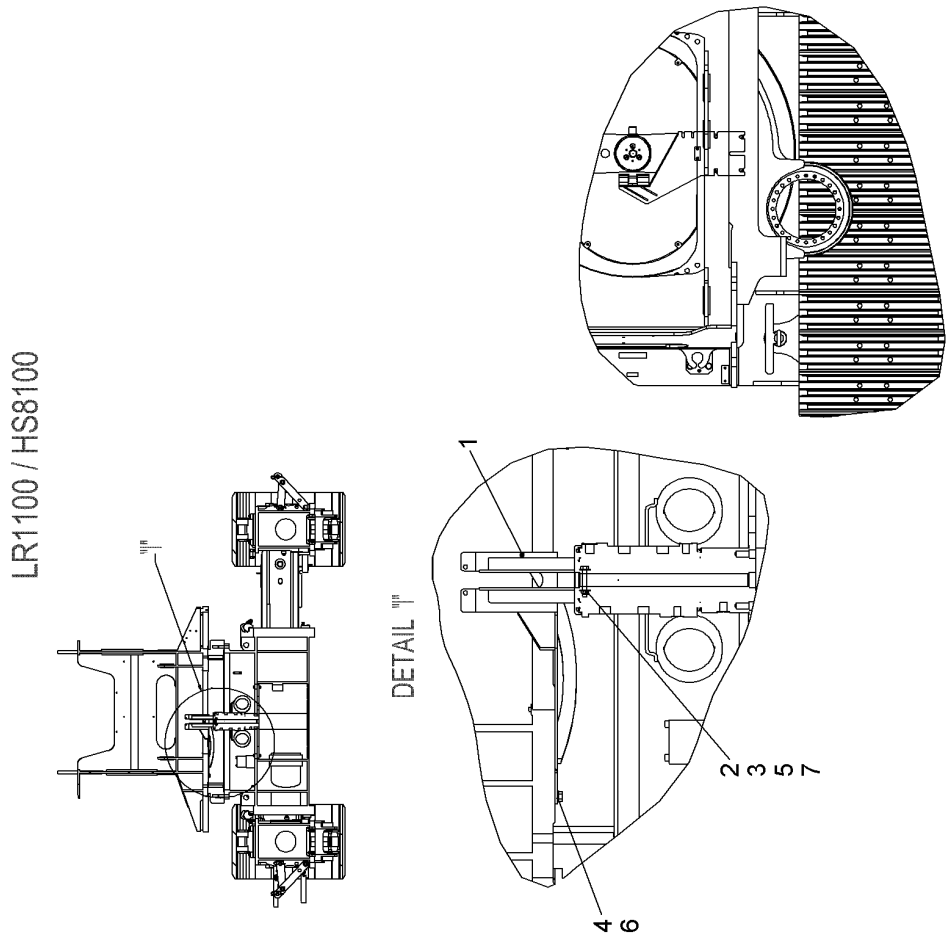
LR1100 / HS8100
DETAIL "I"
1
2
3
5
7
4
6
516892

Pos.	Item	Quantity	Description	Bezeichnung	Serie	K
1	10552306	1	CONSOLE	KONSOLE		
2	10572706	2	WP	WP		
3	406527914	1	HEX SCREW ISO 4017 M10X80 A4-70	SECHSKANTSCHRAUBE		
4	10539316	4	HEX SCREW ISO 4017 M16X30 10.9	SECHSKANTSCHRAUBE		
5	10540494	1	HEX NUT ISO 10511 M10 A4	SECHSKANTMUTTER		
6	10544173	4	WASHER ISO 7093-1 16	SCHEIBE		
7	10540511	2	WASHER ISO 7093-1 10 A4	SCHEIBE		

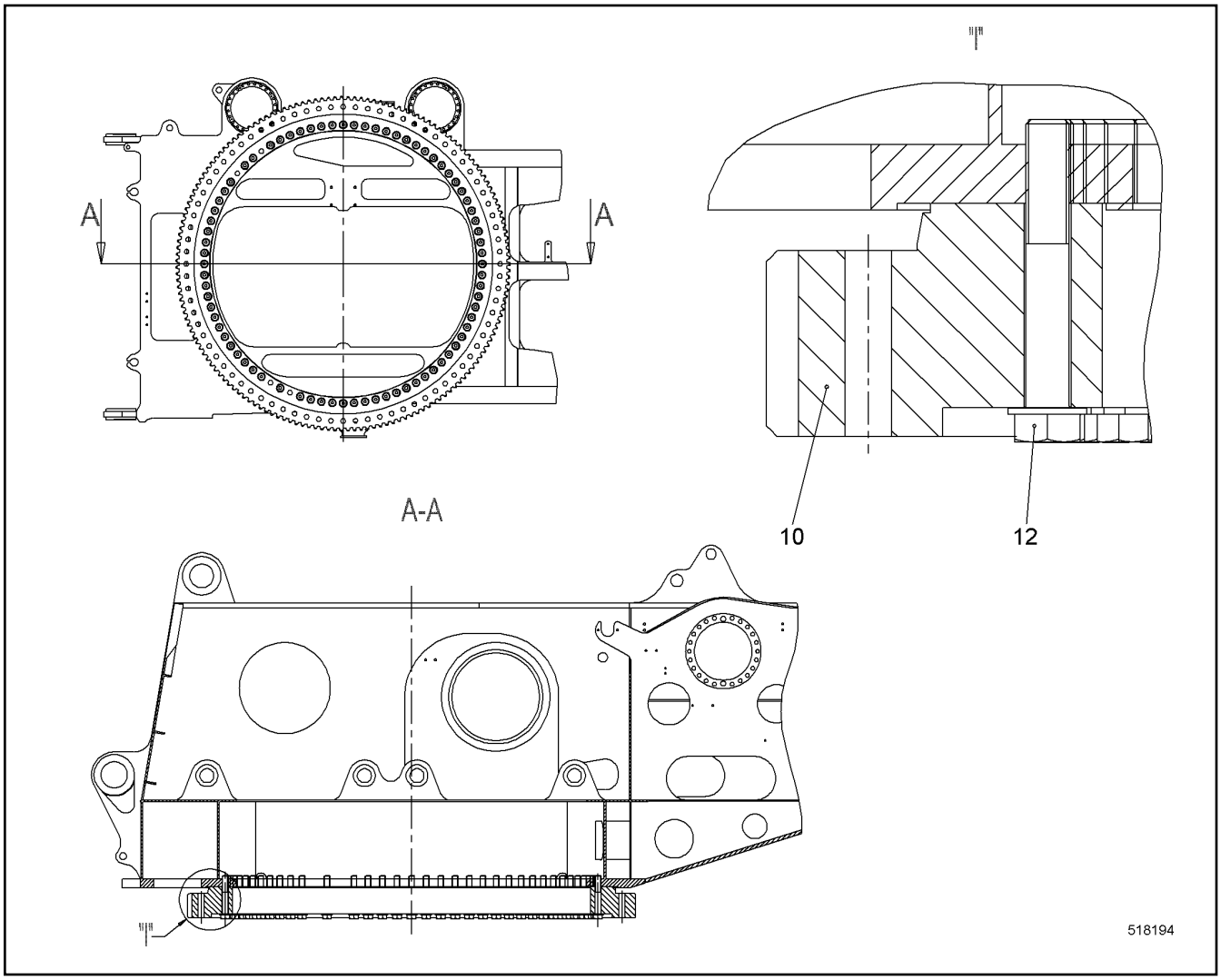

Pos.	Item	Quantity	Description	Bezeichnung	Serie	K
10	990706901	1	SLEW RING ROLLER BEARING	GW-LAGER		
12	11266734	76	FLANGED BOLT M33X220 10.9	BUNDSCHRAUBE		

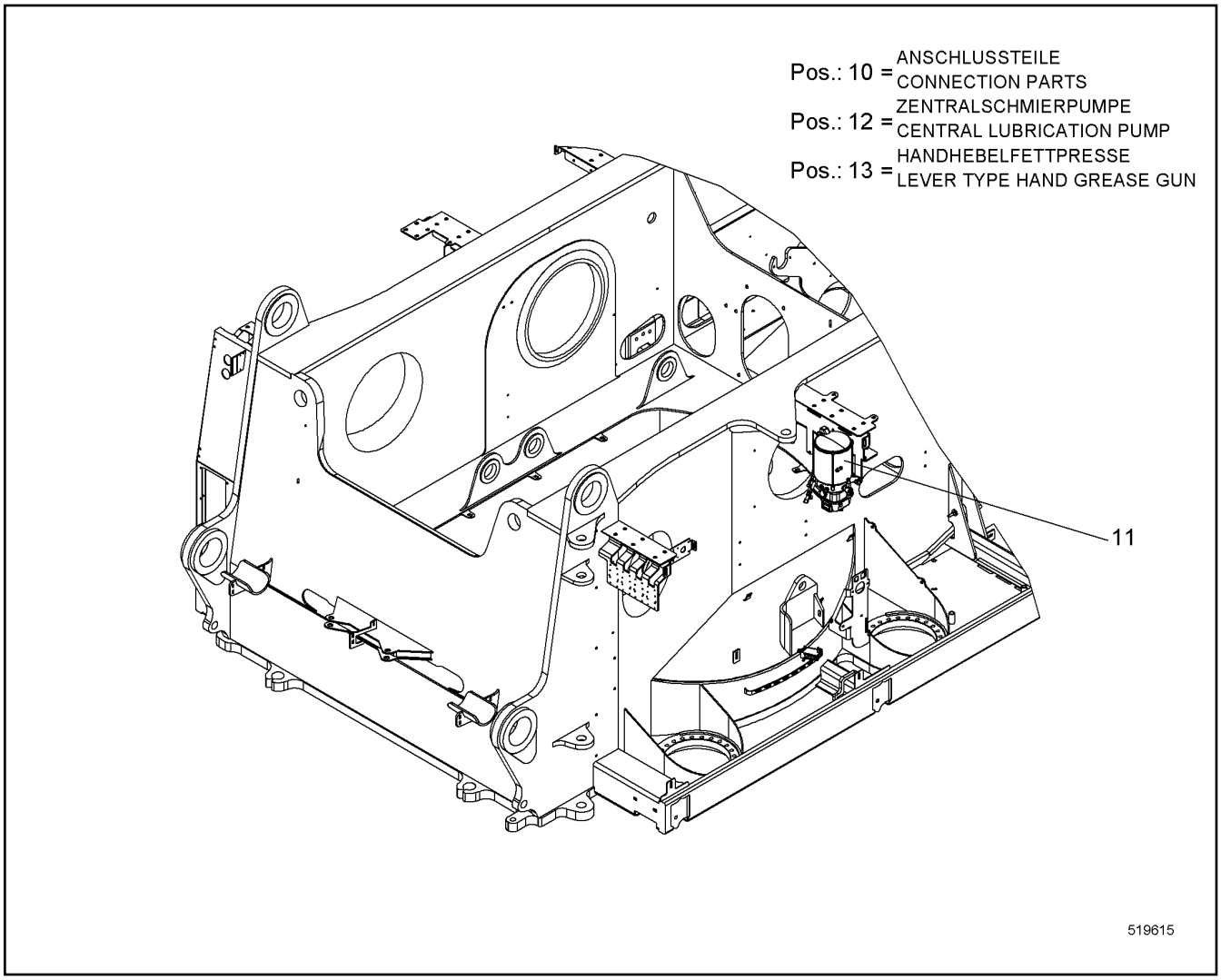

Pos.	Item	Quantity	Description	Bezeichnung	Serie	K
10	11280482	2	CONNECTION PARTS	ANSCHLUSSTEILE		
11	11265572	1	MOUNTING PARTS ⇨ ❑ 71	MONTAGETEILE		
12	11223123	1	CENTRAL LUBRICATION PUMP ⇨ ❑ 72	ZENTRALSCHMIERPUMPE		
13	10445635	1	LEVER TYPE HAND GREASE GUN	HANDHEBELFETTPRESSE		
14	10448187	1	FILLER NECK CONNECTION	FUELLANSCHLUSS		

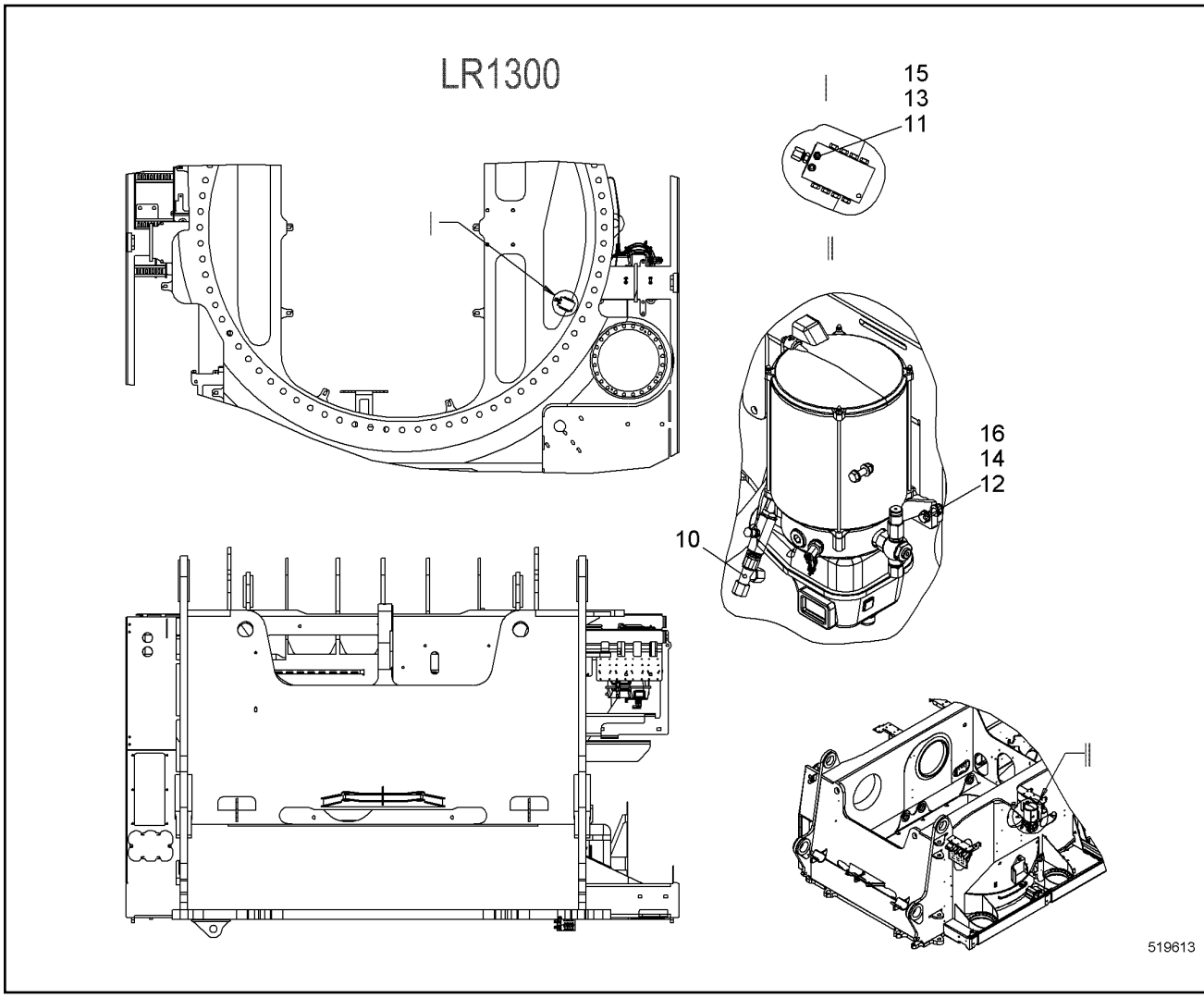

Pos.	Item	Quantity	Description	Bezeichnung	Serie	K
10	11262806	1	FITTING	VERSCHRAUBUNG		
12	406501314	2	HEX SCREW ISO 4017 M8X30 A4-70	SECHSKANTSCHRAUBE		
13	420005214	2	WASHER ISO 7089 5 A4	SCHEIBE		
14	420001014	4	WASHER ISO 7089 8 A4	SCHEIBE		
15	10540484	2	HEX NUT ISO 10511 M5 A4	SECHSKANTMUTTER		
16	10540493	2	HEX NUT ISO 10511 M8 A4	SECHSKANTMUTTER		

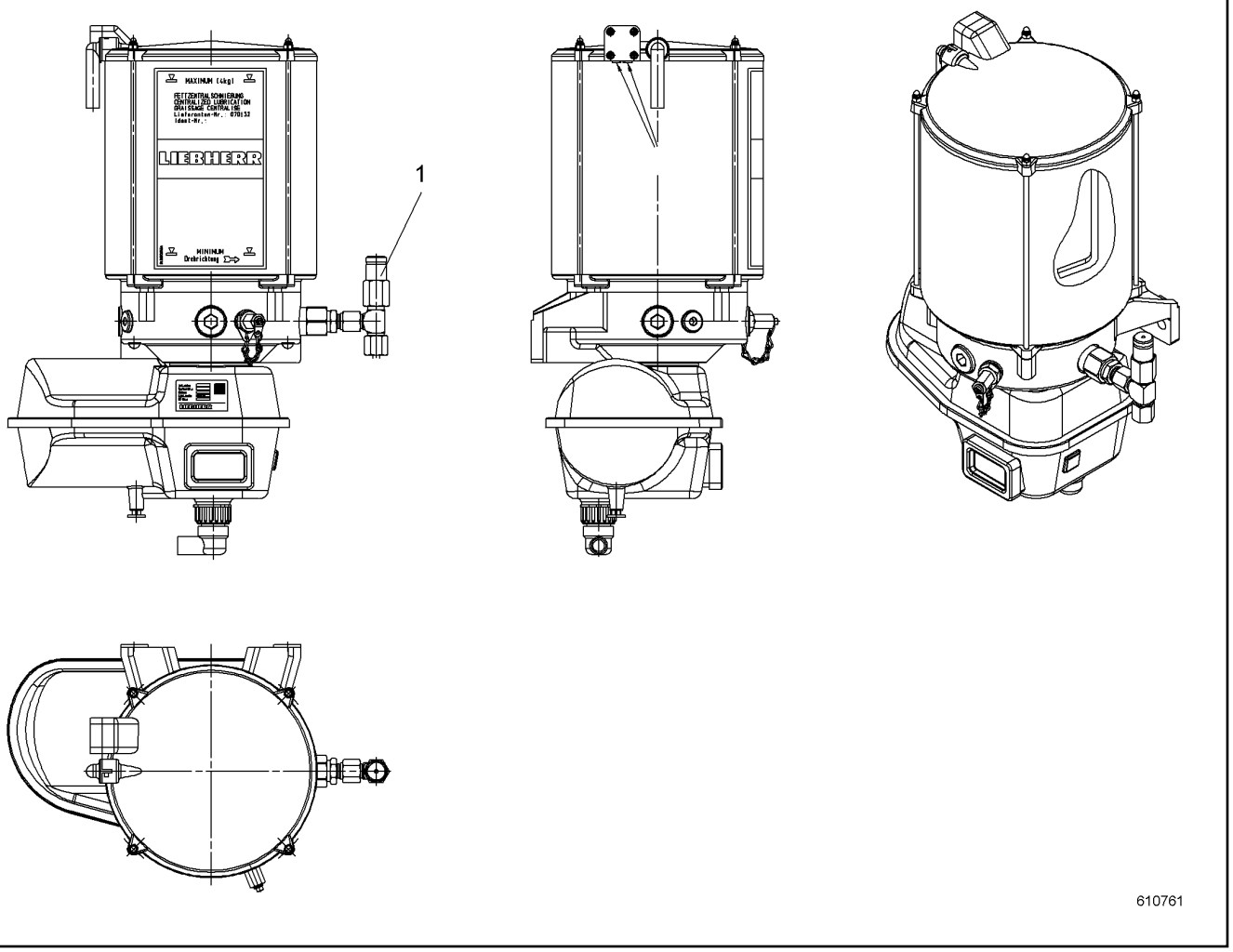

Pos.	Item	Quantity	Description	Bezeichnung	Serie	K
1	10540347	1	PUMP ELEMENT	PUMPENELEMENT		

LIEBHERR

24.5.2017
520296

138376_ETK_001

FIRE EXTINGUISHER MOUNTING
FEUERLOESCHER EINBAU

73 (1/2)

10 57 884 5

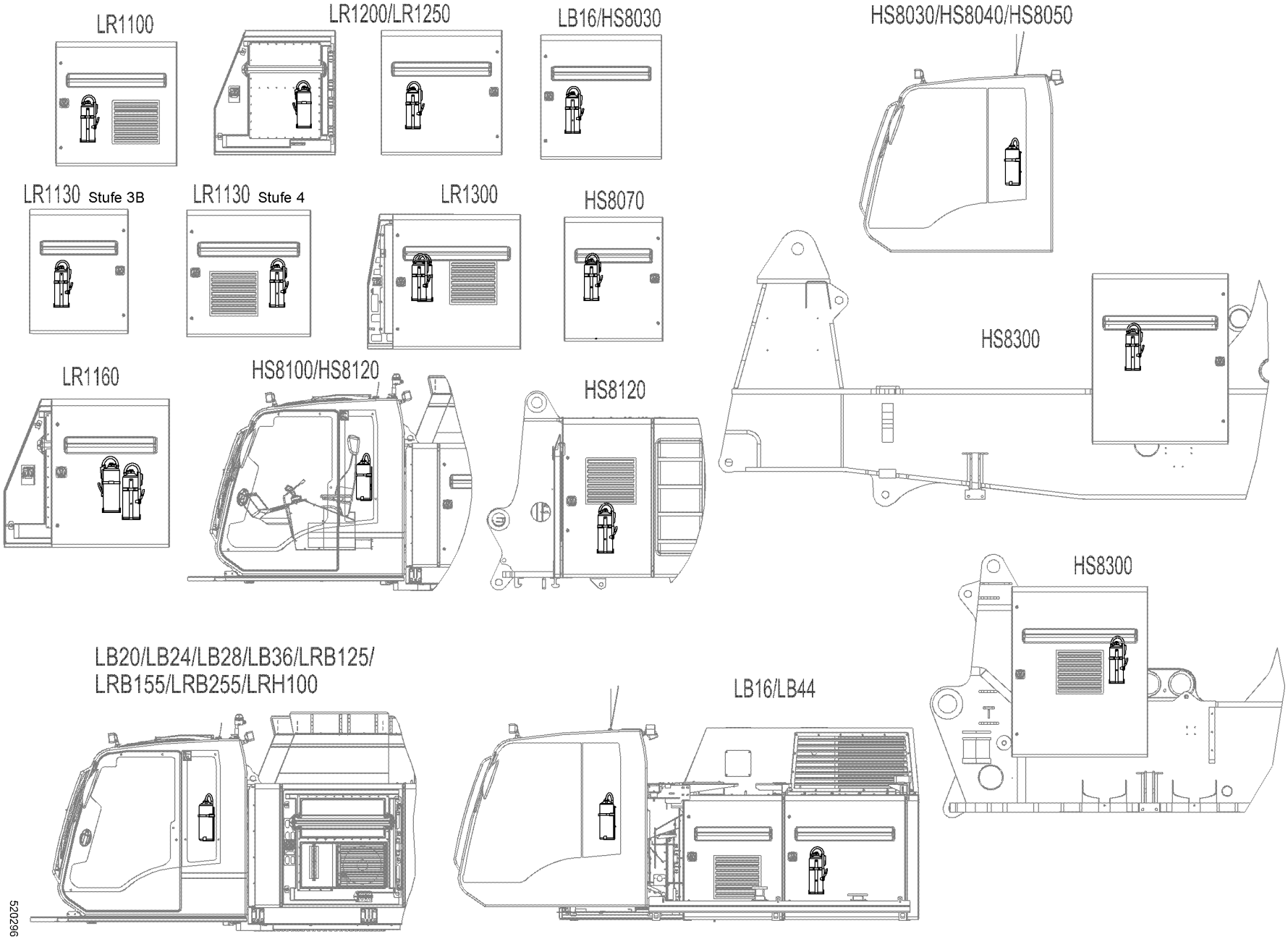

Pos.	Item	Quantity	Description	Bezeichnung	Serie	K
10	926547714	1	FIRE EXTINGUISHER RFK ⇨ ❑ 75	FEUERLOESCHER NRS		

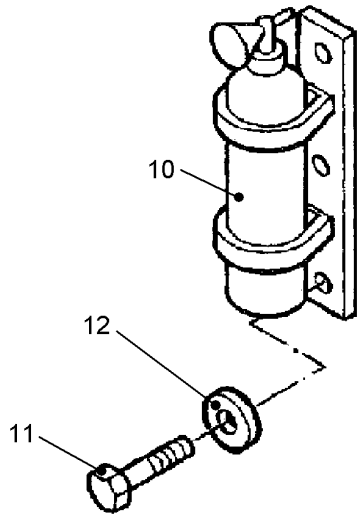

500174

Pos.	Item	Quantity	Description	Bezeichnung	Serie	K
10	890100814	1	FIRE EXTINGUISHER	FEUERLOESCHER		
11	406501514	2	HEX SCREW ISO 4017 M8X16 A4-70	SECHSKANTSCHRAUBE		
12	10540510	2	WASHER ISO 7093-1 8 A4	SCHEIBE		

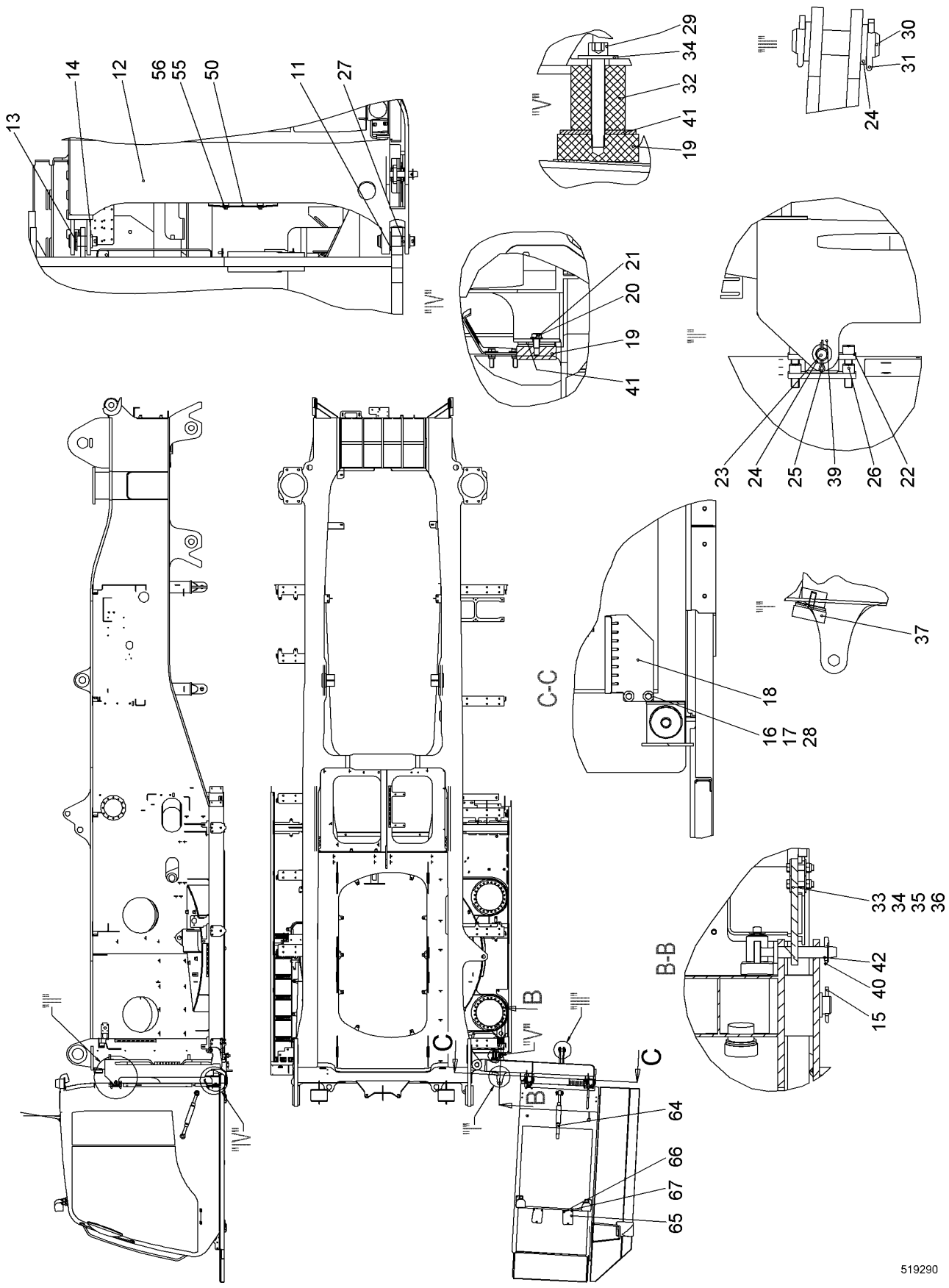

24.5.2017 519290	**138376_ETK_001**	76 (1/2)
LIEBHERR	**CABIN SUSPENSION CPL** **KABINENAUFHAENGUNG KPL**	**10 58 163 4**

Pos.	Item	Quantity	Description	Bezeichnung	Serie	K
11	790519814	2	COLLER BUSHING 40/80X51 CUSN7ZNPB	BUNDBUCHSE		
12	10578321	1	FRAME ST.CONST.	RAHMEN SCHWK		
13	451436614	1	PIN DIN EN 22341-B 40H11X115X102 X20CR1	BOLZEN		
14	421103014	3	WASHER DIN EN 28738 40 ST	SCHEIBE		
15	433009114	2	SPLIT PIN ISO 1234 8X63 A4	SPLINT		
16	10540510	4	WASHER ISO 7093-1 8 A4	SCHEIBE		
17	10540493	2	HEX NUT ISO 10511 M8 A4	SECHSKANTMUTTER		
18	10588168	1	FASTENER	HALTERUNG		
19	726910114	3	RUBBER MOUNT	LAGER GUMMI		
20	4901782	2	WASHER ISO 7089 12 A4	SCHEIBE		
21	406517714	2	HEX SCREW ISO 4017 M12X20 A4-70	SECHSKANTSCHRAUBE		
22	918585114	2	CONSOLE	KONSOLE		
23	485501714	2	PIN DIN EN 22340-B 25F7X120 42CRMO4+QT;E	BOLZEN		
24	421102214	8	WASHER DIN EN 28738 26 ST;	SCHEIBE		
25	433007708	4	SPLIT PIN ISO 1234 6.3X45	SPLINT		
26	10544065	8	SOCKET HEAD SCREW ISO 4762 M16X30 10.9	ZYLINDERSCHRAUBE		
27	968523914	1	PIN	BOLZEN		
28	406501314	2	HEX SCREW ISO 4017 M8X30 A4-70	SECHSKANTSCHRAUBE		
29	10539524	1	SOCKET HEAD SCREW ISO 4762 M12X85 A4-7	ZYLINDERSCHRAUBE		
30	450052114	2	PIN DIN EN 22340-B 25F8X88 LHRD900-40;100	BOLZEN		
31	433007508	4	SPLIT PIN ISO 1234 6.3X32 ST	SPLINT		
32	11216088	1	SPACER PIECE	DISTANZSTUECK		
33	10578343	1	MOUNTING BRACKET	BEFESTIGUNGSBUEGEL		
34	10540512	9	WASHER ISO 7093-1 12 A4	SCHEIBE		
35	406527614	4	HEX SCREW ISO 4017 M12X55 A4-70	SECHSKANTSCHRAUBE		
36	10540495	4	HEX NUT ISO 10511 M12 A4	SECHSKANTMUTTER		
37	726904014	1	RUBBER MOUNT	LAGER GUMMI		
39	790212314	2	BUSHING 25/40X56	BUCHSE		
40	432016214	1	SAFETY PLUG W HINGE-LID 8X42	SICHERHEITSKLAPPSTECKER		
42	11942798	1	PIN	BOLZEN		
50	10586253	1	WP	WP		
55	10540511	4	WASHER ISO 7093-1 10 A4	SCHEIBE		
56	406518714	4	HEX SCREW ISO 4017 M10X20 A4-70	SECHSKANTSCHRAUBE		
64	790306414	1	TURNBUCKLE	SPANNSCHLOSS		
65	385072014	2	COVER	DECKEL		
66	406501514	6	HEX SCREW ISO 4017 M8X16 A4-70	SECHSKANTSCHRAUBE		
67	420001014	6	WASHER ISO 7089 8 A4	SCHEIBE		

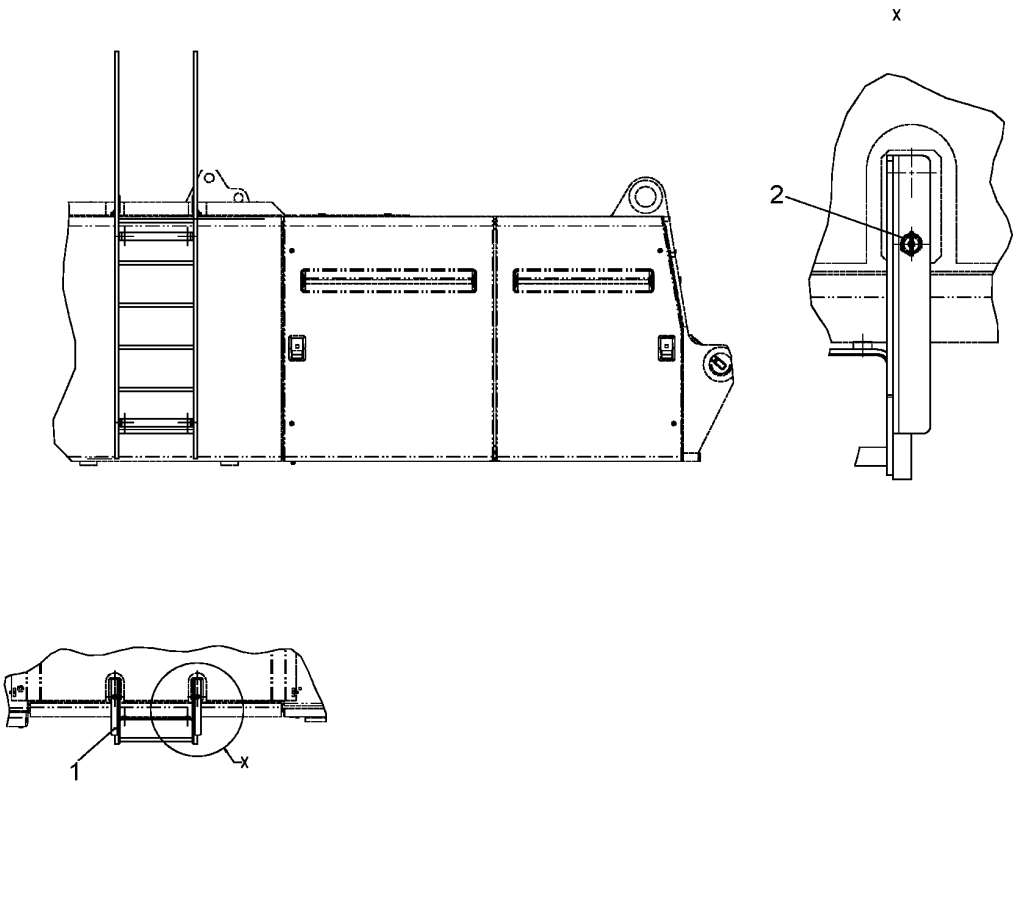

Pos.	Item	Quantity	Description	Bezeichnung	Serie	K
1	10226190	1	LADDER CPL	LEITER KPL		
2	485565814	2	SAFETY PLUG W HINGE-LID 4X27	SICHERHEITSKLAPPSTECKER		

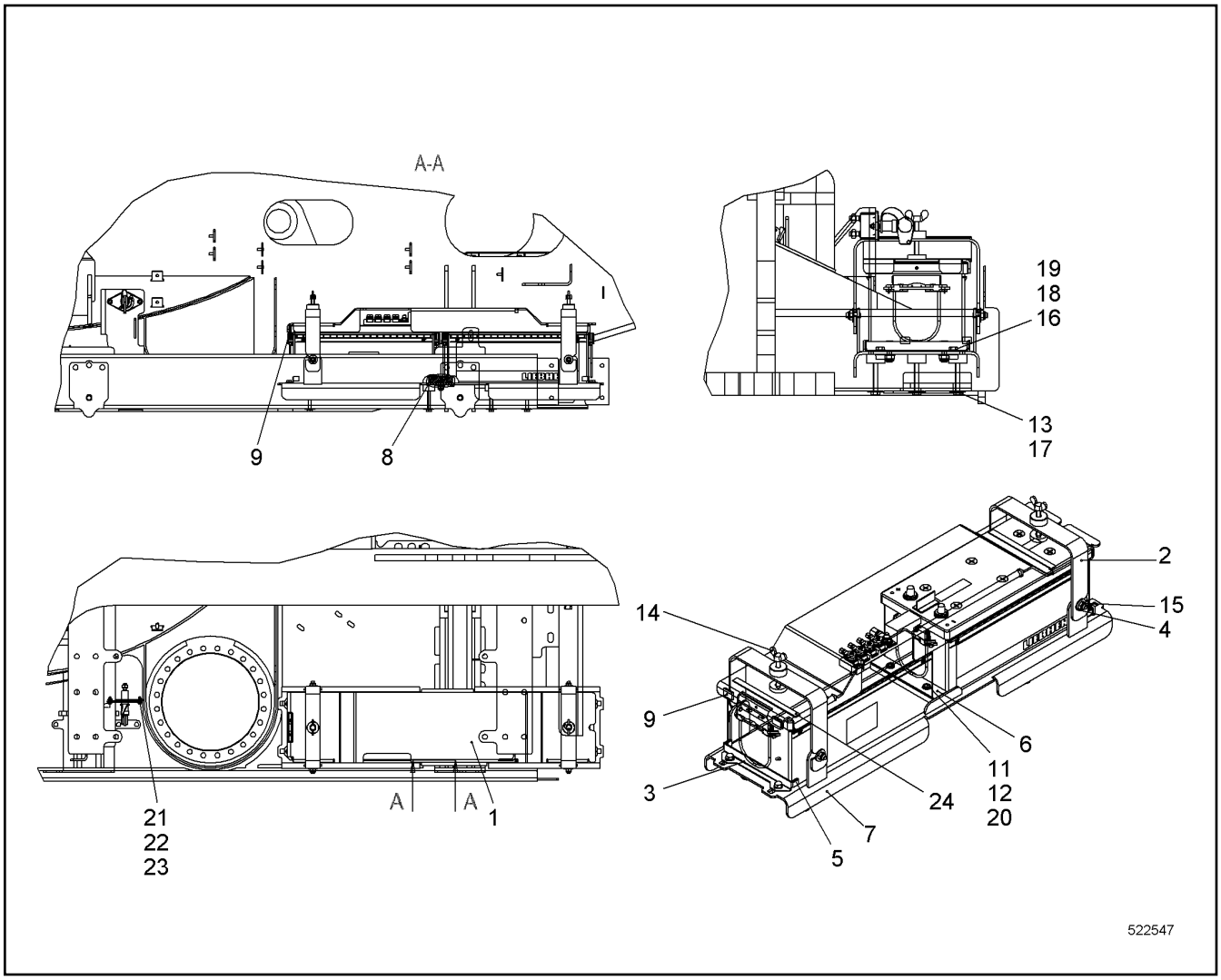

Pos.	Item	Quantity	Description	Bezeichnung	Serie	K
1	10560674	1	BATTERY COVER	BATTERIEABDECKUNG		
2	10597981	2	BRACKET	BUEGEL		
3	10509133	2	CLAMPING BRACKET	KLEMMBUEGEL		
4	10540511	4	WASHER ISO 7093-1 10 A4	SCHEIBE		
5	289058614	0.016	RUBBER	GUMMI		
6	948282314	1	STRIP	LEISTE		
7	10579979	1	CONSOLE	KONSOLE		
8	289058614	0.08	RUBBER	GUMMI		
9	289058614	0.023	RUBBER	GUMMI		
11	4901782	2	WASHER ISO 7089 12 A4	SCHEIBE		
12	485555314	2	SOCKET HEAD SCREW ISO 4762 M12X35 A4-7	ZYLINDERSCHRAUBE		
13	420600408	6	WASHER DIN 440 R11 ST	SCHEIBE		
14	485559814	2	WING SCREW DIN 316 M10X80 4.6	FLUEGELSCHRAUBE		
15	10540494	4	HEX NUT ISO 10511 M10 A4	SECHSKANTMUTTER		
16	406518714	4	HEX SCREW ISO 4017 M10X20 A4-70	SECHSKANTSCHRAUBE		
17	10539293	6	HEX SCREW ISO 4017 M10X75 A4-70	SECHSKANTSCHRAUBE		
18	420001114	4	WASHER ISO 7089 10 A4	SCHEIBE		
19	485550014	4	CAGE NUT M10-RR-140-62	KAEFIGMUTTER		
20	10540495	2	HEX NUT ISO 10511 M12 A4	SECHSKANTMUTTER		
21	10540484	2	HEX NUT ISO 10511 M5 A4	SECHSKANTMUTTER		
22	406501814	2	HEX SCREW ISO 4017 M5X20 A4-70	SECHSKANTSCHRAUBE		
23	485570714	4	WASHER ISO 7093-1 5 A4	SCHEIBE		
24	262107814	6	CELL RUBBER	ZELLGUMMI		

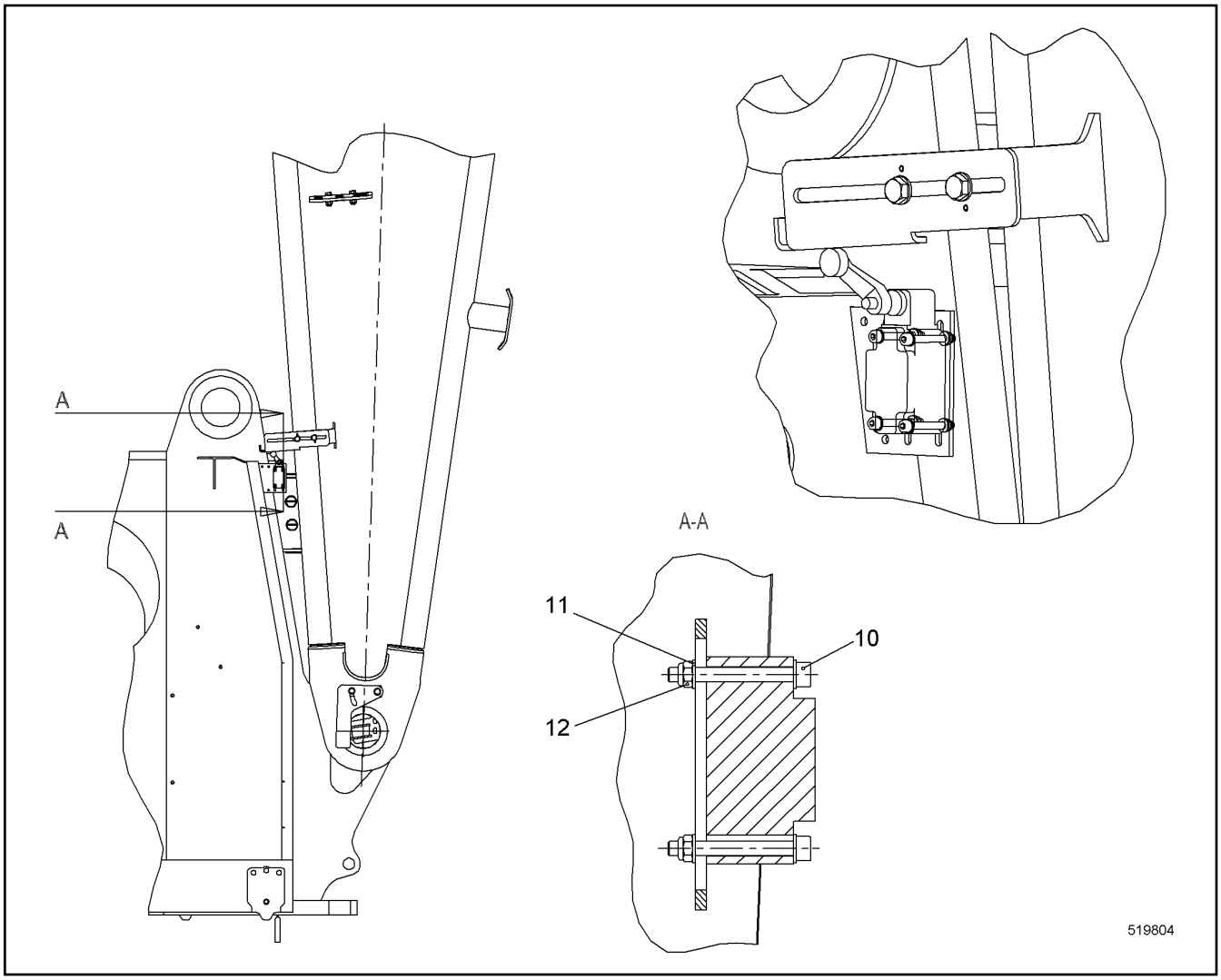

Pos.	Item	Quantity	Description	Bezeichnung	Serie	K
10	404214114	4	SOCKET HEAD SCREW ISO 4762 M5X45 10.9	ZYLINDERSCHRAUBE		
11	420005214	8	WASHER ISO 7089 5 A4	SCHEIBE		
12	10540484	4	HEX NUT ISO 10511 M5 A4	SECHSKANTMUTTER		

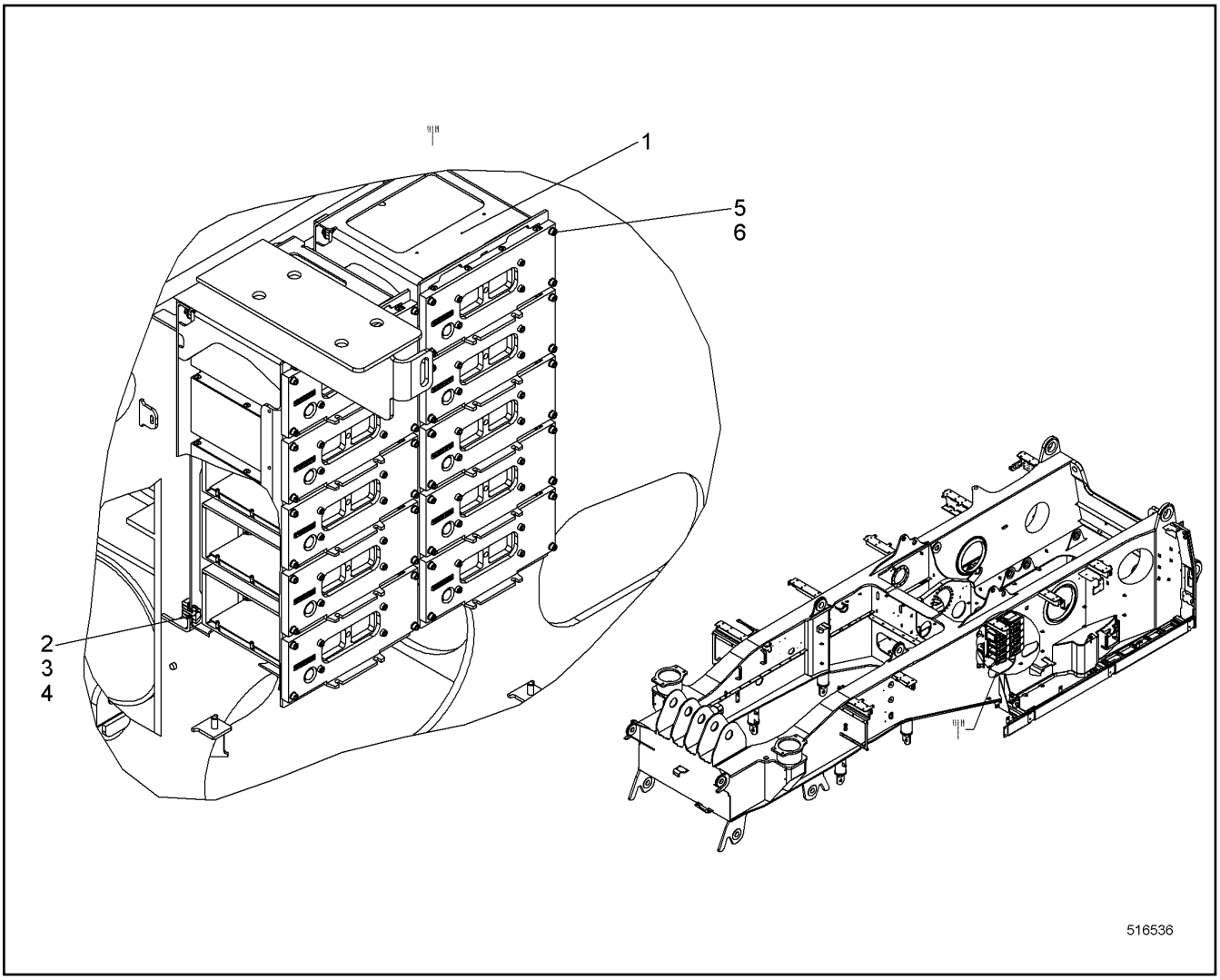

Pos.	Item	Quantity	Description	Bezeichnung	Serie	K
1	916793914	2	MODULE ASSEMBLY GROUP CARRIER	MODULBAUGRUPPENTRAEGER		
2	485549914	8	CAGE NUT M10-RR-140-47	KAEFIGMUTTER		
3	406527414	8	HEX SCREW ISO 4017 M10X18 A4-70	SECHSKANTSCHRAUBE		
4	420001114	8	WASHER ISO 7089 10 A4	SCHEIBE		
5	420005214	40	WASHER ISO 7089 5 A4	SCHEIBE		
6	10278936	40	SOCKET HEAD SCREW ISO 4762 M5X20 A4-7	ZYLINDERSCHRAUBE		

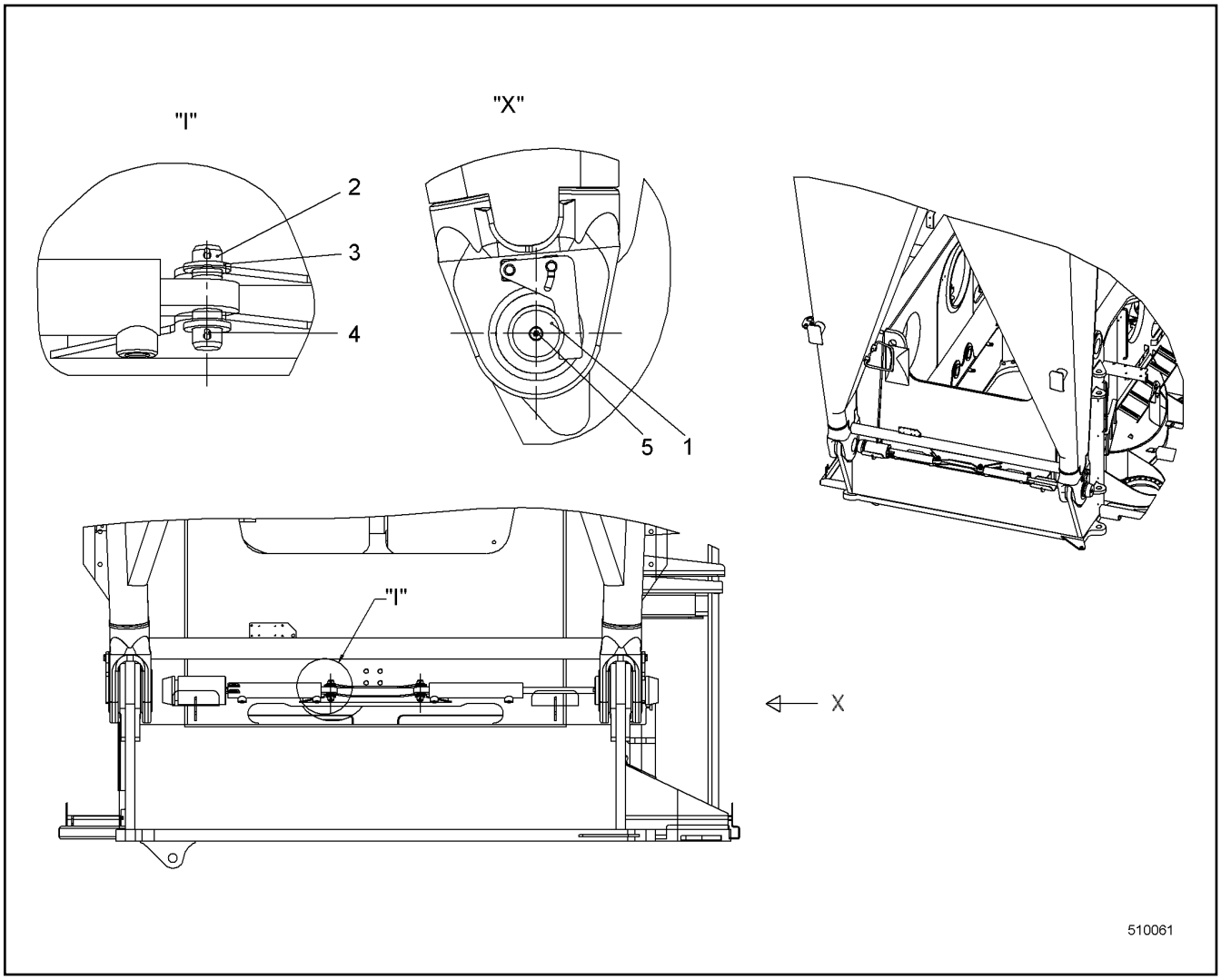

Pos.	Item	Quantity	Description	Bezeichnung	Serie	K
1	959712214	2	PIN 120X270 35NICRMOV125	BOLZEN		
2	450052114	2	PIN DIN EN 22340-B 25F8X88 LHRD900-40;100	BOLZEN		
3	421102214	4	WASHER DIN EN 28738 26 ST;	SCHEIBE		
4	433006614	4	SPLIT PIN ISO 1234 5X45	SPLINT		
5	7743242	2	HYDRAULIC-TYPE LUBRICAT.NIPPLE	KEGELSCHMIERNIPPEL		

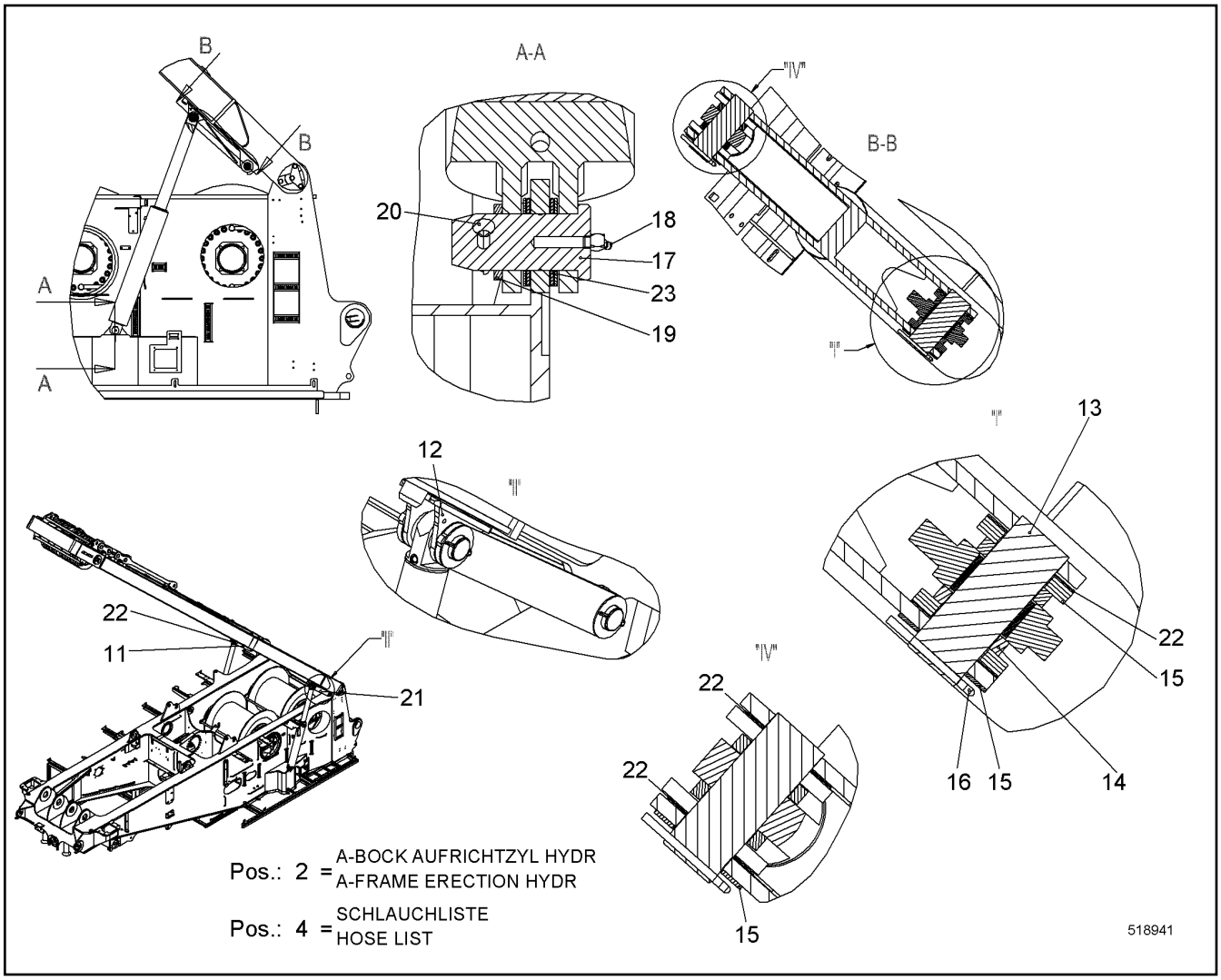

Pos.	Item	Quantity	Description	Bezeichnung	Serie	K
2	10519695	1	A-FRAME ERECTION HYDR ⇨ ❑ 84	A-BOCK AUFRICHTZYL HYDR		
4	10545451	1	HOSE LIST ⇨ ❑ 88	SCHLAUCHLISTE		
11	11235361	1	MOUNTING LINK LEFT CPL	LASCHE LI KPL		
12	10533999	2	ROCKER ST.CONST.	WIPPE SCHWK		
13	10534039	4	PIN 50X138 LHRD900-40;10019758	BOLZEN		
14	10534042	8	BUSHING 51/70X13.5 POLYAMID	BUCHSE		
15	949740514	20	WASHER 52/92X3 PA 6 G	SCHEIBE		
16	433008214	4	SPLIT PIN ISO 1234 6.3X71 A4	SPLINT		
17	950663614	2	PIN 60X110 LHRD750-30;10019758	BOLZEN		
18	7001228	2	HYDRAULIC-TYPE LUBRICAT.NIPPLE	KEGELSCHMIERNIPPEL		
19	421103214	2	WASHER DIN EN 28738 45 ST;	SCHEIBE		
20	433010314	2	SPLIT PIN ISO 1234 10X80 A4	SPLINT		
21	11235382	1	MOUNTING LINK RIGHT CPL	LASCHE RE KPL		
22	11241005	16	WASHER 52/92X1 PA 6 G	SCHEIBE		
23	10593096	8	WASHER 46/70X2 POLYAMID	SCHEIBE		

A-Bock-Aufrichtzylinder

A-frame elevating cylinder

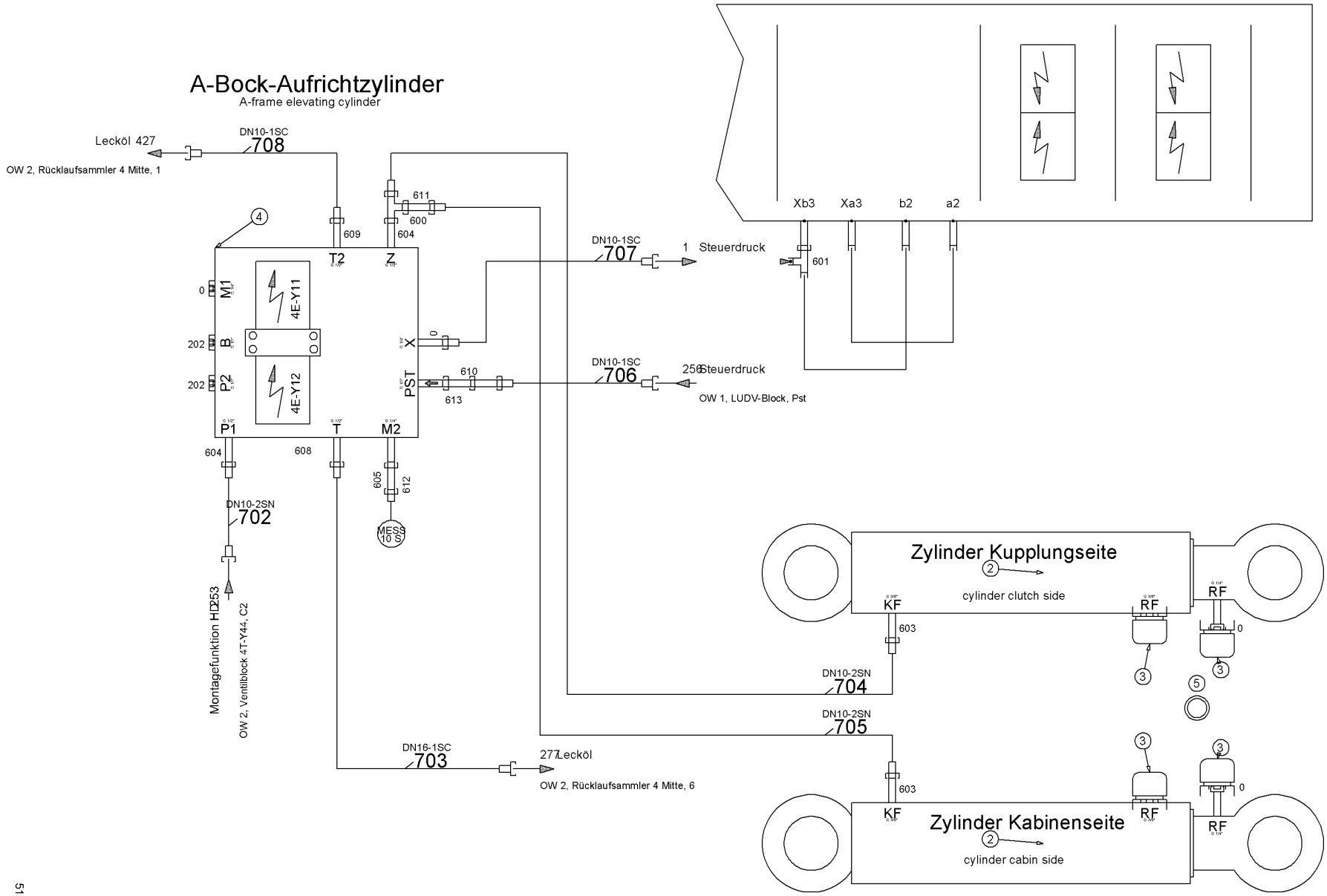

517862

Pos.	Item	Quantity	Description	Bezeichnung	Serie	K
2	592104114	2	DOUBLE-ACTING CYL ⇨ ❑ 86	DOPPELWIRKZYL		
3	540136314	4	VENTILATION VALVE	ENTLUEFTUNGSVENTIL		
4	10225408	1	VALVE BLOCK ⇨ ❑ 87	VENTILBLOCK		
5	710103814	4	SEALING RING	DICHTRING		
201	510694514	2	GAUGE CONNECTION	MESSSTUTZEN		
202	247112702	2	FITTING	VERSCHRAUBUNG		
600	7617461	1	FITTING	VERSCHRAUBUNG		
603	471032708	2	FITTING	VERSCHRAUBUNG		
604	471032608	2	FITTING	VERSCHRAUBUNG		
605	471004514	1	FITTING	VERSCHRAUBUNG		
608	247009702	1	FITTING	VERSCHRAUBUNG		
609	247009402	1	FITTING	VERSCHRAUBUNG		
610	485433514	1	FITTING	VERSCHRAUBUNG		
611	7617354	1	FITTING	VERSCHRAUBUNG		
612	7617268	1	FITTING	VERSCHRAUBUNG		
613	7617460	1	FITTING	VERSCHRAUBUNG		
614	7362091	1	FITTING	VERSCHRAUBUNG		
615	247043202	2	FITTING	VERSCHRAUBUNG		
616	247117302	1	FITTING	VERSCHRAUBUNG		

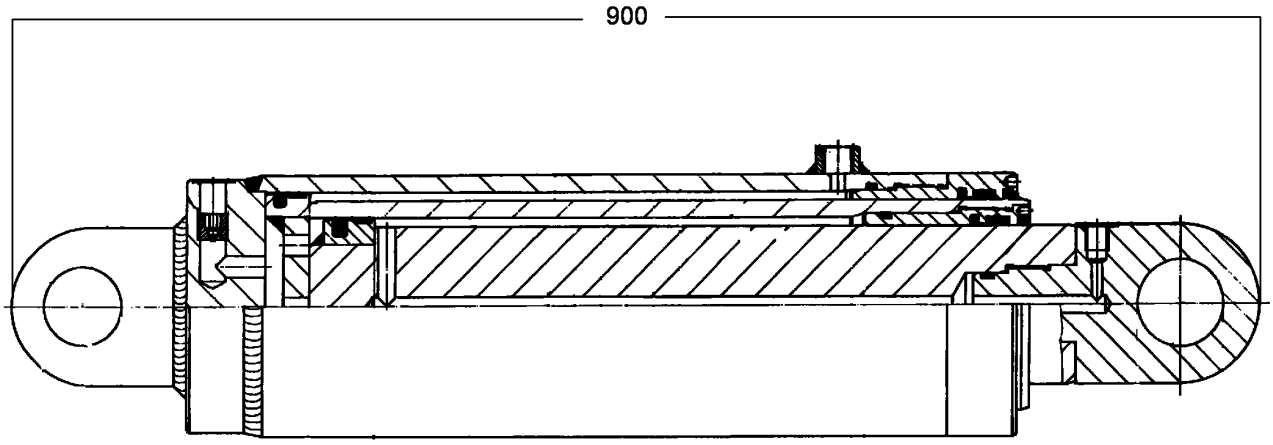

Pos.	Item	Quantity	Description	Bezeichnung	Serie	K
2	11909669	1	TELESCOPE	TELESKOP		
90	11918996	1	ROD EYE	STANGENAUGE		
180	726466314	1	O-RING	O-RING		
181	11918997	2	SUPPORTING RING	STUETZRING		
190	10504737	1	BUSHING 50/60X35 CUZN25AL5	BUCHSE		
270	11249191	1	NOZZLE	DUESE		
900	790407714	1	SEALING SET CPL CYL	DS KPL ZYL		

Pos.: 4 = DROSSELRUECKSCHLAGVENTIL
LOW REGULATING CHECK VALVE

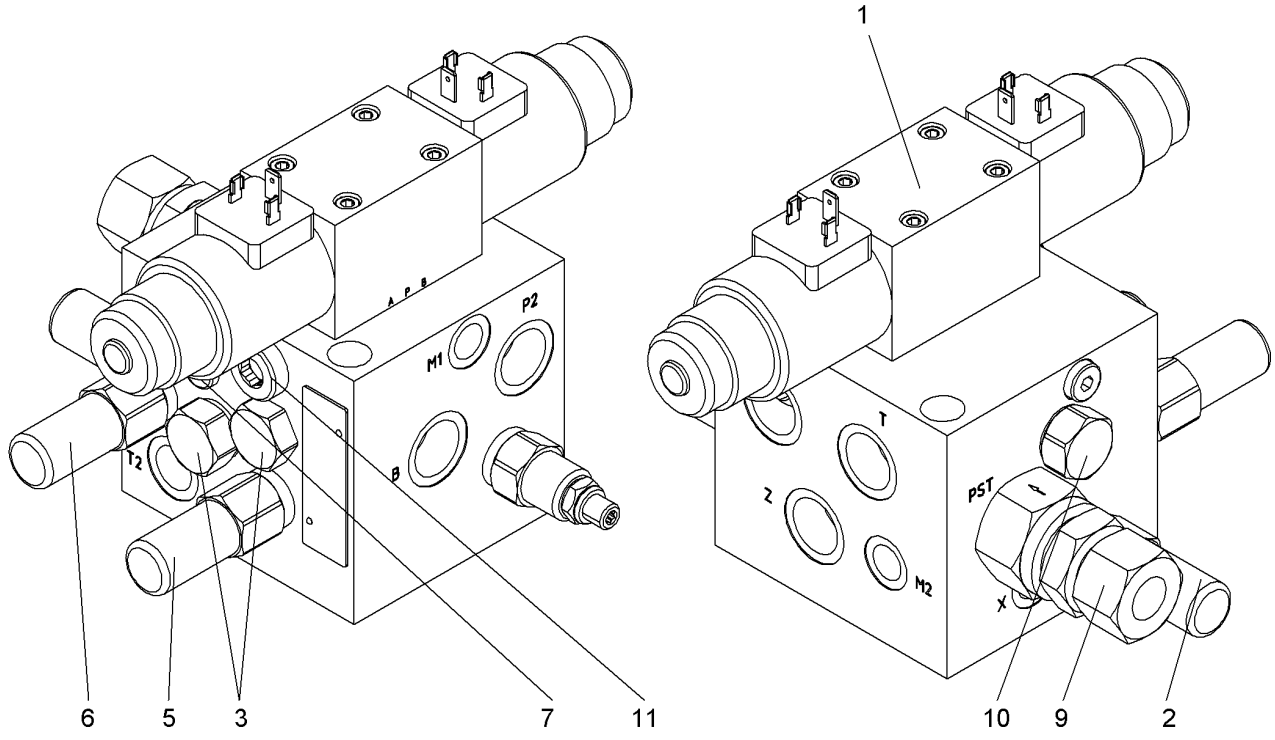

Pos.	Item	Quantity	Description	Bezeichnung	Serie	K
1	11233727	1	DIRECTIONAL CONTROL VALVE	WEGEVENTIL		
2	10350546	1	PRESSURE LIMITING VALVE	DRUCKBEGRENZUNGSVENTIL		
3	11233729	2	NON-RETURN VALVE	RUECKSCHLAGVENTIL		
4	11233730	1	FLOW REGULATING CHECK VALVE	DROSSELRUECKSCHLAGVENTIL		
5	11233731	1	PRESSURE LIMITING VALVE	DRUCKBEGRENZUNGSVENTIL		
6	11233731	1	PRESSURE LIMITING VALVE	DRUCKBEGRENZUNGSVENTIL		
7	11233732	1	NOZZLE	DUESE		
9	11233742	1	NON-RETURN VALVE	RUECKSCHLAGVENTIL		
10	11233749	1	NON-RETURN VALVE	RUECKSCHLAGVENTIL		
11	11233751	1	NON-RETURN VALVE	RUECKSCHLAGVENTIL		

ACHTUNG !
ATTENTION !
ATTENTION !
ATENCIÓN !
ATENÇÃO !
ВНИМАНИЕ

Für Schlauchbestellungen kann über die Schlauchnummer, in der entsprechenden Schlauchliste, die Identnummer festgestellt werden.

For ordering flexible hoses you can find the identification number through the hose-number in the corresponding hose-list.

Pour des ordres de tuyau flexible le nombre d'identification on voit dans la liste de tuyau flexible correspondente.

Para el pedido de manguera, indicar el número de identificación de la manguera de la lista respectiva.

Para se encomendar uma mangueira, consulte o número de identificaçao na respectiva lista de mangueiras.

Для оформления заказов на шланги/рукавы идент. № может быть определен при помощи номера шланга/рукава, указанного в соотетствующем перечне шлангов/рукавов.

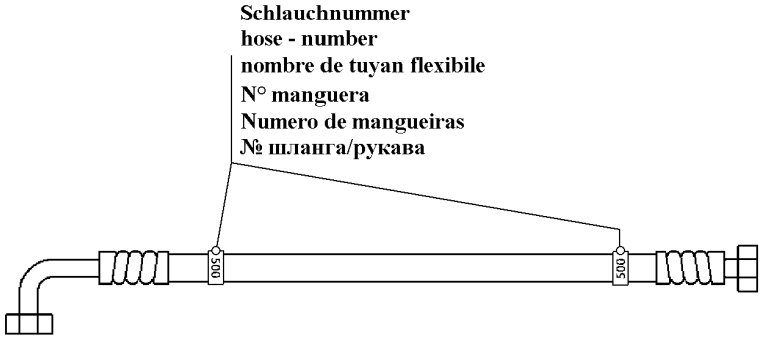

500000

Pos.	Item	Quantity	Description	Bezeichnung	Serie	K
702	928137714	1	HOSE CPL	SCHLAUCH KPL		
703	928591114	1	HOSE CPL	SCHLAUCH KPL		
704	928538414	1	HOSE CPL	SCHLAUCH KPL		
705	929376814	1	HOSE CPL	SCHLAUCH KPL		
706	919791614	1	HOSE CPL	SCHLAUCH KPL		
707	918805114	1	HOSE CPL	SCHLAUCH KPL		
708	919127514	1	HOSE CPL	SCHLAUCH KPL		

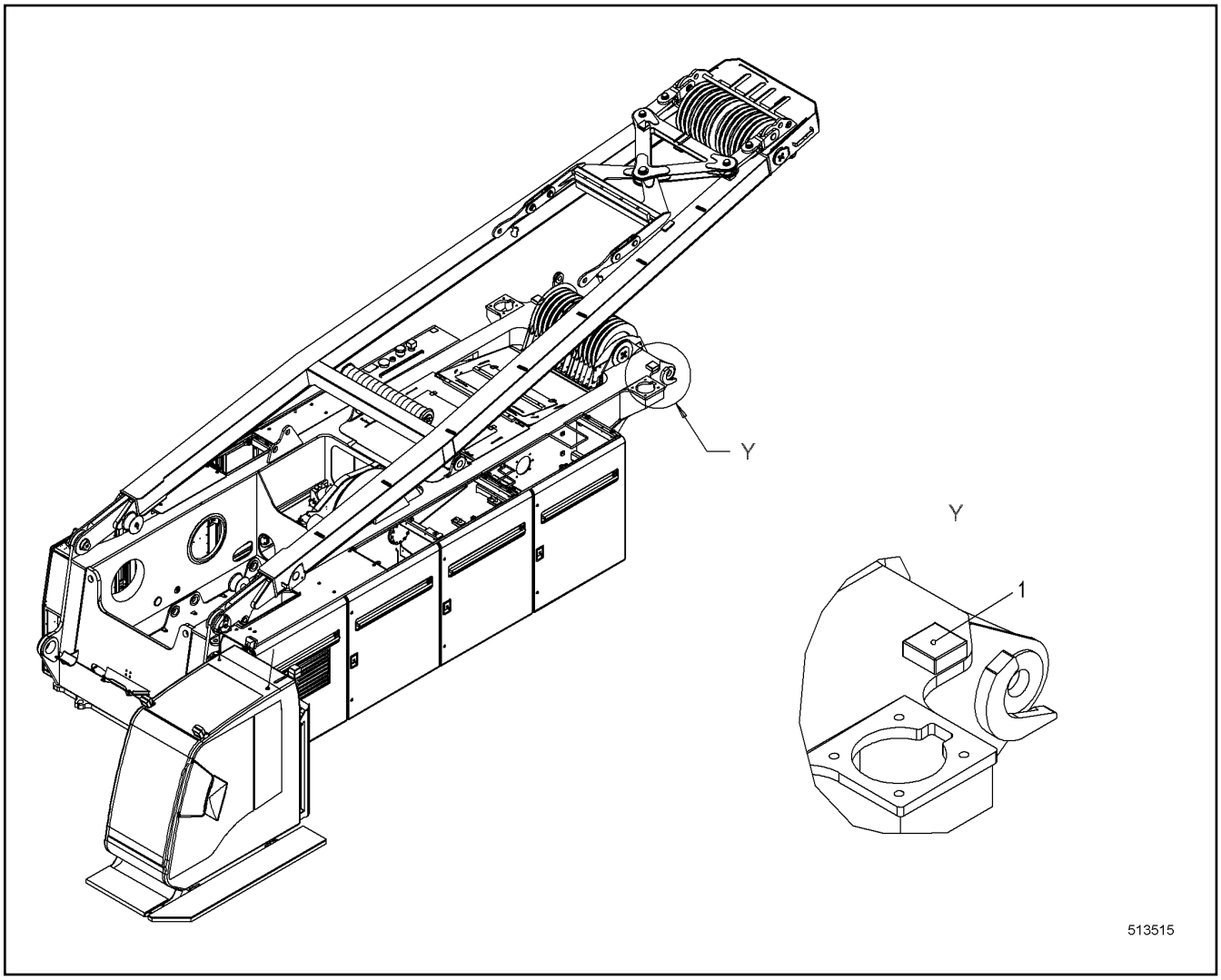

Pos.	Item	Quantity	Description	Bezeichnung	Serie	K
1	10098143	2	BASE PLATE	AUFLAGEPLATTE		

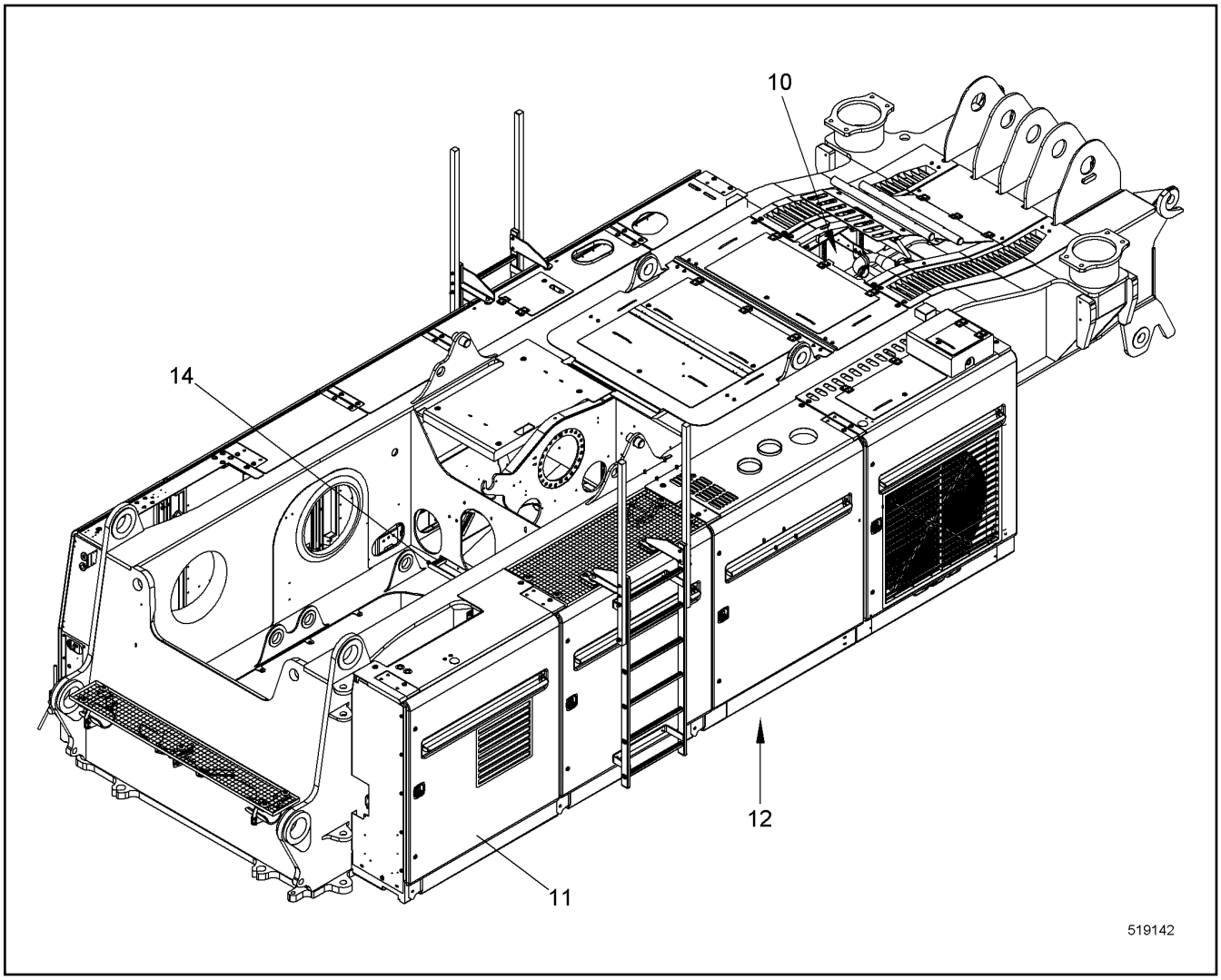

Pos.	Item	Quantity	Description	Bezeichnung	Serie	K
10	11240480	1	CENTRAL POWER UNIT ⇨ ❑ 91	ZENTRALAGGREGAT		
11	11244090	1	PANELLING SUPERSTR. INSTAL.CPL ⇨ ❑ 312	VERKLEIDUNG OW EINBAU KPL		
12	11249222	1	COVER UNDERSIDE ⇨ ❑ 330	ABDECKUNG UNTERSEITE		
14	11244837	1	MOUNTING PARTS SUPERSTRUCTURE ⇨ ❑ 332	BEF-TEILE OW		

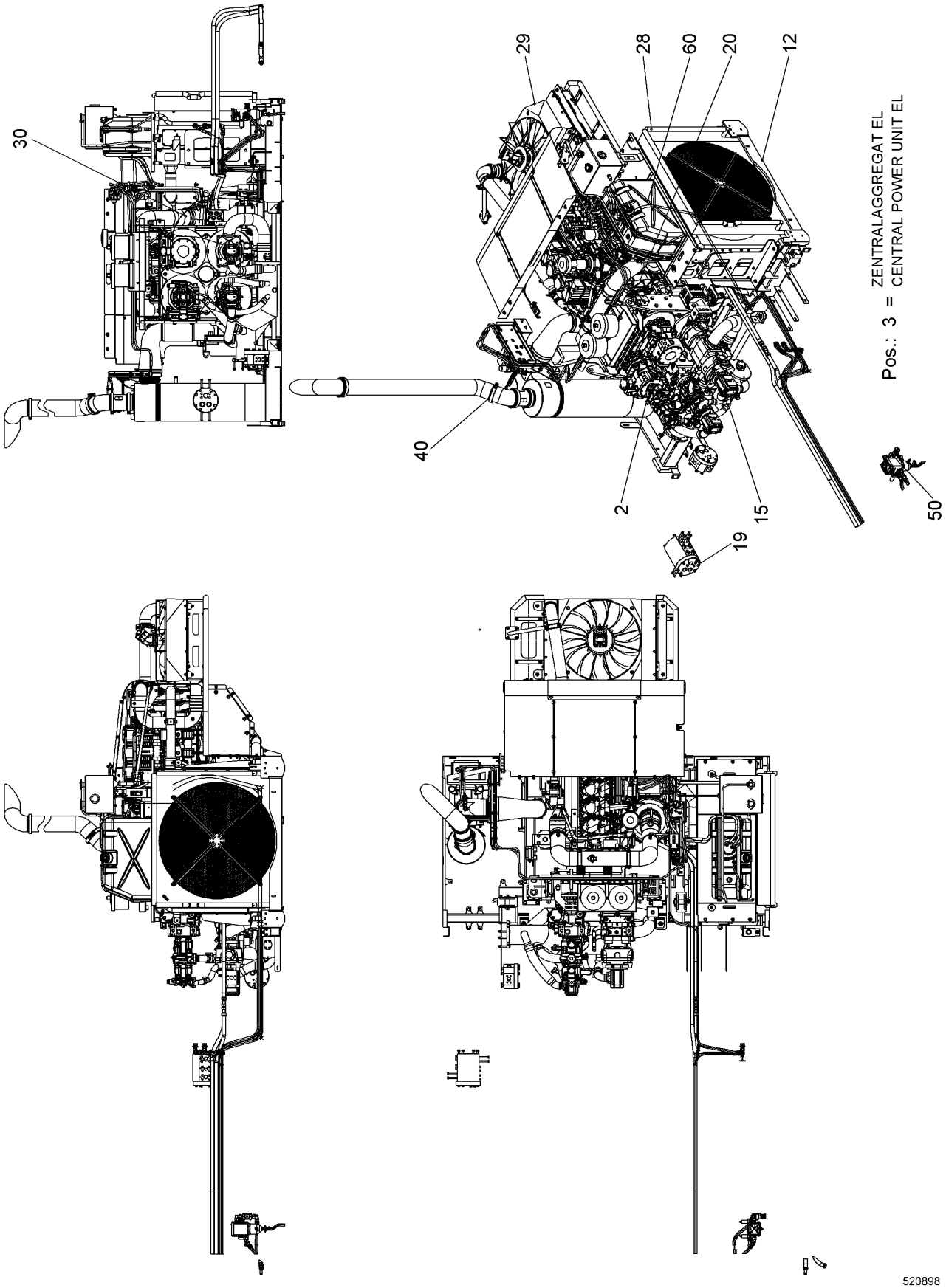
30
29
28
60
20
12
40
2
15
19
50
Pos.: 3 = ZENTRALAGGREGAT EL
CENTRAL POWER UNIT EL
520898

Pos.	Item	Quantity	Description	Bezeichnung	Serie	K
2	11247735	1	HYDR POWER UNIT ⇨ ❑ 93	AGGREGAT HYDR		
3	11244487	1	CENTRAL POWER UNIT EL ⇨ ❑ 184	ZENTRALAGGREGAT EL		
4	11241137	1	HOSE LIST ⇨ ❑ 185	SCHLAUCHLISTE		
12	11241138	1	MOTOR BEARING CPL ⇨ ❑ 187	MOTORLAGER KPL		
15	10519481	1	SUCTION PIPE OIL ⇨ ❑ 189	ANSAUGROHR OEL		
19	10580170	1	RETURN PIPE ⇨ ❑ 192	RUECKLAUFROHR		
20	11241139	1	ADD-ON PARTS DIESEL ENGINE ⇨ ❑ 193	ANBAUTEILE DIESELMOTOR		
28	11241140	1	COOLER INSTALLATION WATER ⇨ ❑ 194	KUEHLER EINBAU WASSER		
29	11241141	1	COOLER INSTALLATION CHARGE AIR ⇨ ❑ 201	KUEHLER EINBAU LADELUFT		
30	11241142	1	SUCTION UNIT AIR ⇨ ❑ 206	ANSAUGANLAGE LUFT		
40	11241143	1	EXHAUST GAS SYSTEM ⇨ ❑ 210	ABGASANLAGE		
50	11241144	1	FUEL SYSTEM ⇨ ❑ 212	KRAFTSTOFFANLAGE		
60	11241145	1	ASSEMBLY INSTAL. ⇨ ❑ 216	ANLAGE HARNSTOFF EINBAU		
66	12425454	1	DIESEL ENGINE ⇨ ❑ 222	DIESELMOTOR		
70	11900325	1	EXHAUST GAS SYSTEM ⇨ ❑ 308	ABGASANLAGE		
90	11241146	1	COVER ⇨ ❑ 310	ABDECKUNG		

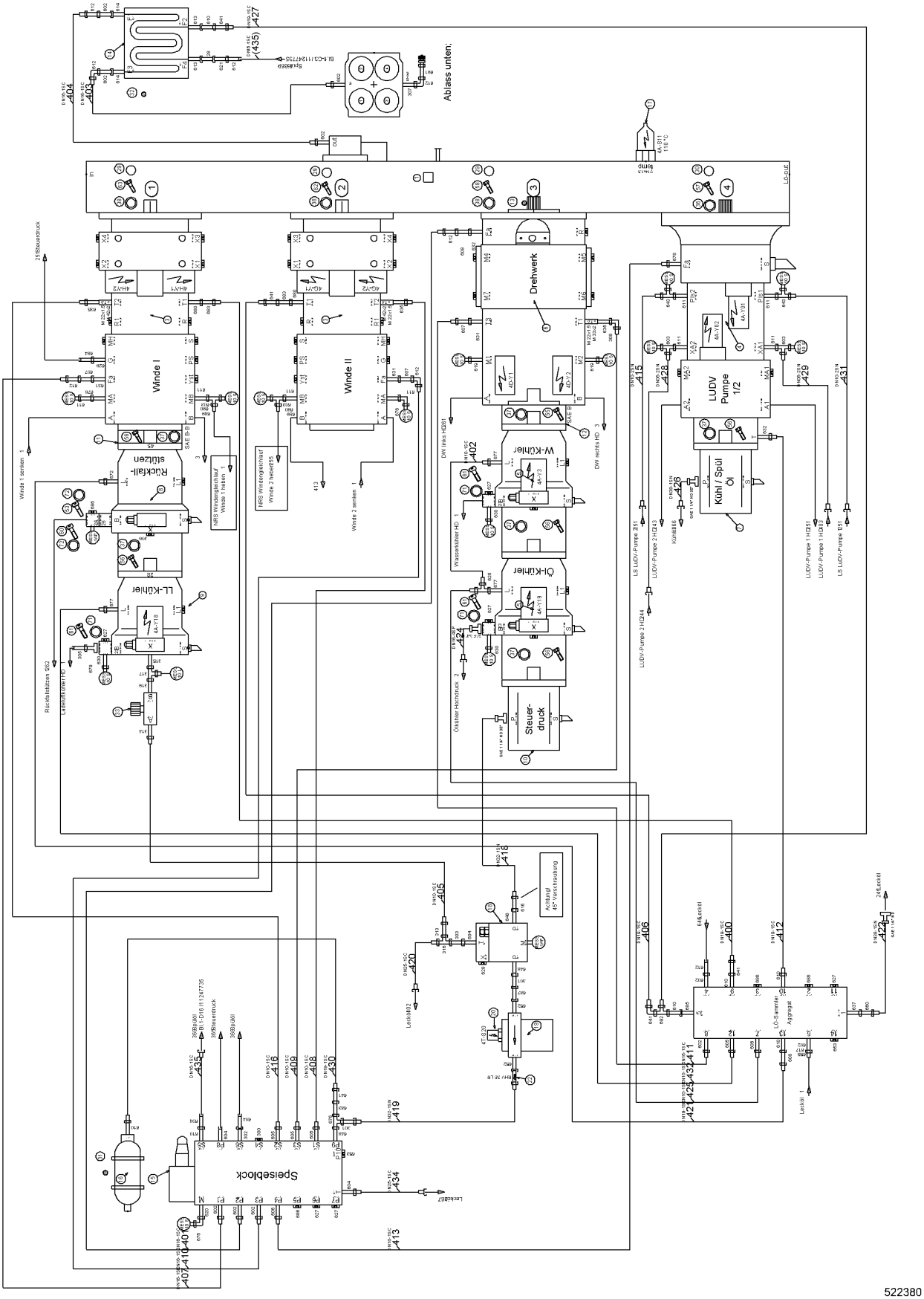

24.5.2017 522380 LIEBHERR	**138376_ETK_001** **HYDR POWER UNIT** **AGGREGAT HYDR**	❑ 93 (1/4) **11 24 773 5**

Pos.	Item	Quantity	Description	Bezeichnung	Serie	K
1	11246820	1	DISTRIBUTOR GEARBOX ⇨ ❑ 97	VERTEILERGETRIEBE		
2	11253687	1	RESTRICTOR BODY	DROSSELKOERPER		
3	10534307	2	V PUMP ⇨ ❑ 99	V.PUMPE		
4	10118349	1	DOUBLE V-PUMP ⇨ ❑ 115	DOPPELV.PUMPE		
5	10530653	2	V PUMP	V.PUMPE		
6	10128787	1	V PUMP ⇨ ❑ 139	V.PUMPE		
7	512249914	1	GEAR PUMP	ZAHNRADPUMPE		
8	10226505	1	V PUMP ⇨ ❑ 166	V.PUMPE		
9	10226013	1	V PUMP ⇨ ❑ 175	V.PUMPE		
10	512214414	1	GEAR PUMP	ZAHNRADPUMPE		
11	10553922	1	THROUGH DRIVE	DURCHTRIEB		
12	10129874	1	THROUGH DRIVE ⇨ ❑ 161	DURCHTRIEB		
13	10594064	1	COUPLING PIECE	KUPPLUNGSSTUECK		
14	10446225	1	HEAT EXCHANGER	WAERMETAUSCHER		
15	511637714	1	VALVE BLOCK FEED PRESSURE ⇨ ❑ 181	VENTILBLOCKSPEISEDRUCK		
16	510641214	1	BLADDER ACCUMULATOR	BLASENSPEICHER		
17	10513459	1	TEMPERATURE SWITCH	TEMPERATURSCHALTER		
18	511414514	1	PRESSURE LIMITING VALVE ⇨ ❑ 182	DRUCKBEGRENZUNGSVENTIL		
19	10223581	1	PRESSURE FILTER ⇨ ❑ 183	DRUCKFILTER		
20	592200514	1	CLOGGING INDICATOR	VERSCHMUTZUNGSANZEIGE		
22	511419314	1	NON-RETURN VALVE	RUECKSCHLAGVENTIL		
24	944137814	1	FLANGE	FLANSCH		
25	944813514	1	FLANGE	FLANSCH		
26	11253689	2	RESTRICTOR BODY	DROSSELKOERPER		
27	511442214	1	OIL DRAIN PLUG M22X1.5	OELABLASSSCHRAUBE		
28	10446305	1	SPECIAL THREADED UNION	SONDERVERSCHRAUBUNG		
29	726411214	3	O-RING	O-RING		
30	790311914	1	O-RING	O-RING		
31	774212914	2	CLAMP	SCHELLE		
32	10350978	1	FASTENING CLIP	BEF SCHELLE		
33	510497214	1	RESTRICTOR VALVE	DROSSELVENTIL		
36	421700314	4	WASHER DIN 7989-B 18 ST;	SCHEIBE		
37	460022703	14	WASHER EN 14399-6 12 C45	SCHEIBE		
38	422010414	20	WASHER RD 34/20.4X5 30 CRMO V 9	SCHEIBE		
52	4001246	4	HEX SCREW ISO 4017 M10X35 10.9	SECHSKANTSCHRAUBE		
53	4043133	4	SOCKET HEAD SCREW ISO 4762 M10X70 10.9	ZYLINDERSCHRAUBE		
56	4066124	12	HEX SCREW ISO 4017 M12X30 10.9	SECHSKANTSCHRAUBE		
57	10543907	4	HEX SCREW ISO 4017 M16X70 10.9	SECHSKANTSCHRAUBE		
58	10543922	4	HEX SCREW ISO 4017 M20X50 10.9	SECHSKANTSCHRAUBE		
59	4066098	12	HEX SCREW ISO 4017 M10X30 10.9	SECHSKANTSCHRAUBE		
60	4043124	4	SOCKET HEAD SCREW ISO 4762 M10X25 10.9	ZYLINDERSCHRAUBE		
61	404333614	12	SOCKET HEAD SCREW ISO 4762 UNC 3/8"-16	ZYLINDERSCHRAUBE		
62	10544093	4	SOCKET HEAD SCREW ISO 4762 M20X55 10.9	ZYLINDERSCHRAUBE		
63	10544092	4	SOCKET HEAD SCREW ISO 4762 M20X50 10.9	ZYLINDERSCHRAUBE		
70	10472425	3	RECTANGULAR SECTION RING	RECHTECKRING		
71	10490784	13	RECTANGULAR SECTION RING	RECHTECKRING		
72	10490781	2	RECTANGULAR SECTION RING	RECHTECKRING		
300	477704614	1	FITTING	VERSCHRAUBUNG		
301	482530914	2	FITTING	VERSCHRAUBUNG		
302	247091002	1	FITTING	VERSCHRAUBUNG		

Pos.	Item	Quantity	Description	Bezeichnung	Serie	K
303	7617494	1	FITTING	VERSCHRAUBUNG		
304	7409720	2	GAUGE CONNECTION	MESSSTUTZEN		
305	7407108	1	FITTING	VERSCHRAUBUNG		
306	477704914	1	FITTING	VERSCHRAUBUNG		
307	247011602	1	FITTING	VERSCHRAUBUNG		
308	247117702	1	FITTING	VERSCHRAUBUNG		
310	511502414	6	FLANGE HALF	FLANSCHHAELFTE		
312	510587514	2	FLANGE HALF	FLANSCHHAELFTE		
313	485437514	1	FITTING	VERSCHRAUBUNG		
314	7362091	1	FITTING	VERSCHRAUBUNG		
315	471007914	1	FITTING	VERSCHRAUBUNG		
316	247020902	1	FITTING	VERSCHRAUBUNG		
317	247242302	1	FITTING	VERSCHRAUBUNG		
318	510629008	1	GAUGE CONNECTION	MESSSTUTZEN		
319	481933614	1	FITTING	VERSCHRAUBUNG		
602	247009702	10	FITTING	VERSCHRAUBUNG		
603	7367776	4	FITTING	VERSCHRAUBUNG		
604	247010102	4	FITTING	VERSCHRAUBUNG		
605	247009402	4	FITTING	VERSCHRAUBUNG		
606	247009202	2	FITTING	VERSCHRAUBUNG		
607	247041402	3	FITTING	VERSCHRAUBUNG		
608	247041102	3	FITTING	VERSCHRAUBUNG		
610	247009902	7	FITTING	VERSCHRAUBUNG		
611	471008214	8	FITTING	VERSCHRAUBUNG		
612	247108302	8	FITTING	VERSCHRAUBUNG		
613	247043502	2	FITTING	VERSCHRAUBUNG		
614	247043102	2	FITTING	VERSCHRAUBUNG		
616	10531725	1	FITTING	VERSCHRAUBUNG		
617	247049102	1	FITTING	VERSCHRAUBUNG		
619	471004614	2	FITTING	VERSCHRAUBUNG		
620	471004514	1	FITTING	VERSCHRAUBUNG		
621	247261802	1	FITTING	VERSCHRAUBUNG		
625	247128602	1	FITTING	VERSCHRAUBUNG		
627	247128402	6	FITTING	VERSCHRAUBUNG		
628	247117302	1	FITTING	VERSCHRAUBUNG		
629	471033014	1	FITTING	VERSCHRAUBUNG		
630	471032808	3	FITTING	VERSCHRAUBUNG		
631	471031508	3	FITTING	VERSCHRAUBUNG		
632	471031308	2	FITTING	VERSCHRAUBUNG		
635	471039908	3	FITTING	VERSCHRAUBUNG		
637	471034708	1	FITTING	VERSCHRAUBUNG		
641	247126202	5	FITTING	VERSCHRAUBUNG		
643	482431314	2	FITTING	VERSCHRAUBUNG		
648	790453814	3	FITTING	VERSCHRAUBUNG		
652	247044302	2	FITTING	VERSCHRAUBUNG		
653	247142002	2	FITTING	VERSCHRAUBUNG		
655	477700114	1	FITTING	VERSCHRAUBUNG		
660	482530814	1	FITTING	VERSCHRAUBUNG		
671	510694514	14	GAUGE CONNECTION	MESSSTUTZEN		
672	471031108	1	FITTING	VERSCHRAUBUNG		
675	482330814	1	FITTING	VERSCHRAUBUNG		
676	7617268	3	FITTING	VERSCHRAUBUNG		
677	471008014	3	FITTING	VERSCHRAUBUNG		
678	471030508	1	FITTING	VERSCHRAUBUNG		
679	510709214	1	FITTING	VERSCHRAUBUNG		
680	471031808	2	FITTING	VERSCHRAUBUNG		
683	485431214	3	FITTING	VERSCHRAUBUNG		
684	485433314	1	FITTING	VERSCHRAUBUNG		
685	475501914	1	FITTING	VERSCHRAUBUNG		
686	247112702	4	FITTING	VERSCHRAUBUNG		

Pos.	Item	Quantity	Description	Bezeichnung	Serie	K
687	481931614	1	FITTING	VERSCHRAUBUNG		
689	477700414	2	FITTING	VERSCHRAUBUNG		
690	477400314	2	FITTING	VERSCHRAUBUNG		
691	470701414	1	FITTING	VERSCHRAUBUNG		
692	247138602	1	FITTING	VERSCHRAUBUNG		

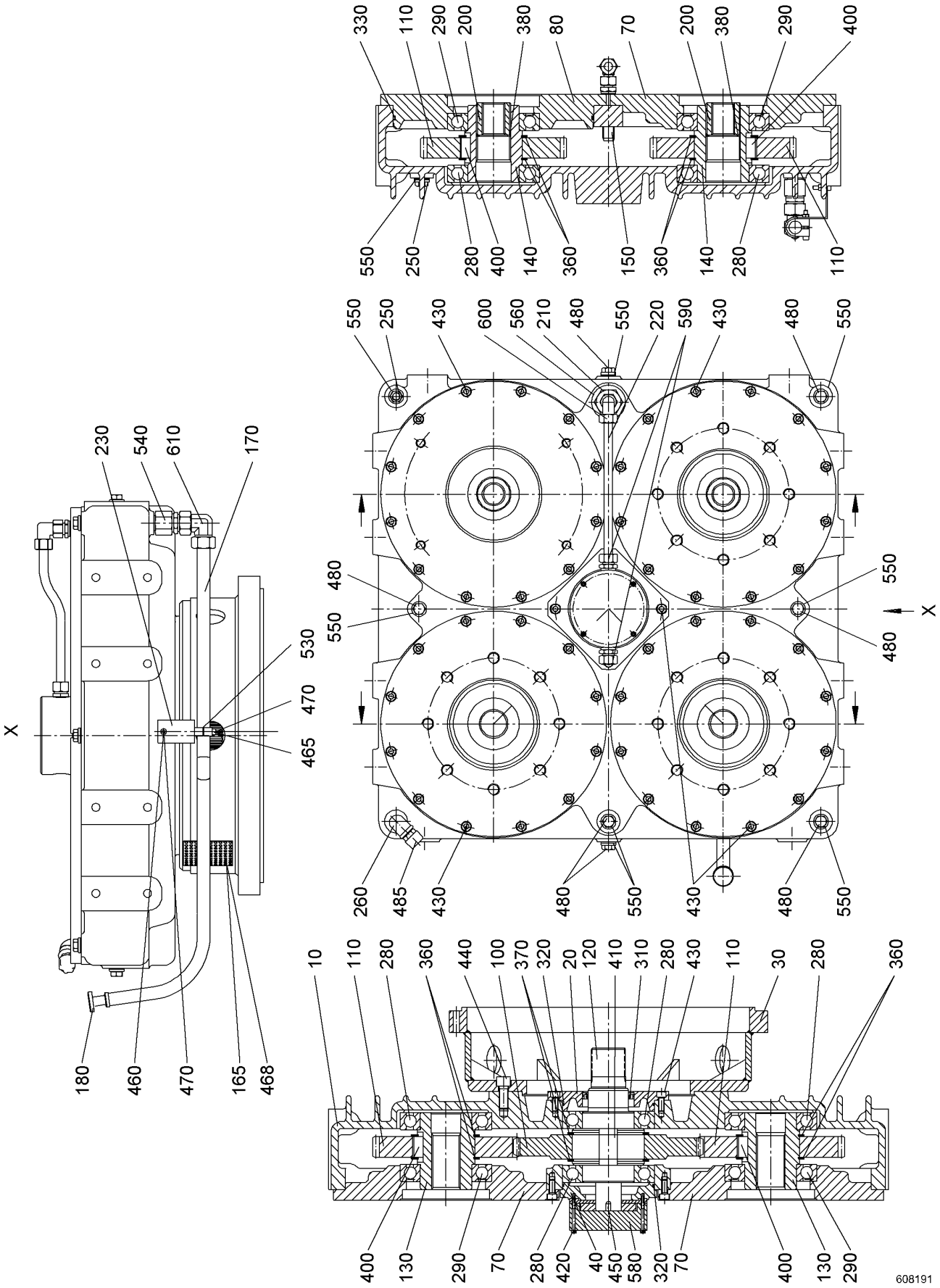
330 110 290 200 380 80 70 200 380 290 400
550 250 280 400 140 360 150 360 140 280 110
550 250 430 600 560 210 480 550 220 590 430 480 550
480 550 480 550 X
260 485 430 480 550 430 480 550
230 540 610 170
530 470 465
X
180 460 470 165 468
10 110 280 360 440 100 370 320 20 120 410 310 280 430 110 30 280 360
400 130 290 70 280 420 40 450 580 320 70 400 130 290
608191

Pos.	Item	Quantity	Description	Bezeichnung	Serie	K
10	11290844	1	HOUSING	GEHAEUSE		
20	592178514	1	SEALING RING COVER	DICHTRINGDECKEL		
30	11250972	1	ADD-ON FLANGE	ANBAUFLANSCH		
40	790403714	1	ADD-ON FLANGE	ANBAUFLANSCH		
70	11250974	3	ADD-ON FLANGE	ANBAUFLANSCH		
80	11290845	1	ADD-ON FLANGE	ANBAUFLANSCH		
100	11294362	1	SPUR WHEEL	STIRNRAD		
110	11294363	4	SPUR WHEEL	STIRNRAD		
120	790346614	1	SPLINE SHAFT	ZAHNWELLE		
130	10350230	2	PROFILE HOLLOW SHAFT	PROFILHOHLWELLE		
140	11253077	2	PROFILE HOLLOW SHAFT	PROFILHOHLWELLE		
150	592316114	1	THREADED PIPE	GEWINDEROHR		
165	11290846	2	PERFORATED PLATE	LOCHBLECH		
170	11290847	1	TUBE	ROHR		
180	11290849	1	OIL DIPSTICK	OELMESSSTAB		
200	11290850	2	COUPLING PIECE	KUPPLUNGSSTUECK		
210	592316314	1	SCREW PLUG	VERSCHLUSSSCHRAUBE		
220	592316414	1	TUBE	ROHR		
230	11290852	1	ANGLE	WINKEL		
250	505105814	2	SCREW PLUG D26X26 G1/2" M14X1.5	VERSCHLUSSSCHRAUBE		
260	505104914	1	VENTILATION FILTER	ENTLUEFTUNGSFILTER		
280	745141814	6	DEEP GROOVE BALL BEARING	RILLENKUGELLAGER		
290	10350232	4	DEEP GROOVE BALL BEARING	RILLENKUGELLAGER		
310	790403914	1	SEALING RING	DICHTRING		
320	10593504	2	O-RING	O-RING		
330	790347014	1	O-RING	O-RING		
360	10530197	8	LOCKING RING DIN 471 A100X3	SICHERUNGSRING		
370	485529714	2	LOCKING RING DIN 471 A125X4	SICHERUNGSRING		
380	11268816	2	LOCKING RING DIN 472 J56X2	SICHERUNGSRING		
400	571827308	8	FITTING KEY DIN 6885 B28X16X36 ST	PASSFEDER		
410	485529814	2	FITTING KEY DIN 6885 B32X18X40	PASSFEDER		
420	11250990	4	SOCKET HEAD SCREW ISO 4762 M5X65 8.8	INNENSECHSKANTSCHRAUBE		
430	404208514	58	SOCKET HEAD SCREW ISO 4762 M10X25 A4-7	ZYLINDERSCHRAUBE		
440	10530200	12	SOCKET HEAD SCREW ISO 4762 M16X40 8.8	ZYLINDERSCHRAUBE		
450	10567120	1	FITTING KEY DIN 6885 B8X7X12	PASSFEDER		
460	11290853	1	SOCKET HEAD SCREW ISO4762 M6X25 8.8	INNENSECHSKANTSCHRAUBE		
465	11290854	1	SOCKET HEAD SCREW ISO4762 M6X45 8.8	INNENSECHSKANTSCHRAUBE		
468	11250998	8	HEX SCREW ISO 4017 M5X12 8.8	SECHSKANTSCHRAUBE		
470	11290855	2	HEX NUT M6	SECHSKANTMUTTER		
480	4000898	9	SCREW PLUG DIN 910 R1/2" 5.8	VERSCHLUSSSCHRAUBE		
485	693113814	1	VENTILATION FILTER	ENTLUEFTUNGSFILTER		
530	11290856	1	PIPE CLAMP	ROHRSCHELLE		
540	11290857	1	REDUCING STUD	REDUZIERSTUTZEN		
550	790347114	11	SEALING RING	DICHTRING		
560	790347214	1	SEALING RING	DICHTRING		
580	592178914	1	LUBRICATING OIL PUMP	SCHMIEROELPUMPE		
590	471016401	2	FITTING	VERSCHRAUBUNG		
600	592317014	1	THREADED ELBOW JOINT	WINKELVERSCHRAUBUNG		
610	11268711	1	THREADED ELBOW JOINT	WINKELVERSCHRAUBUNG		

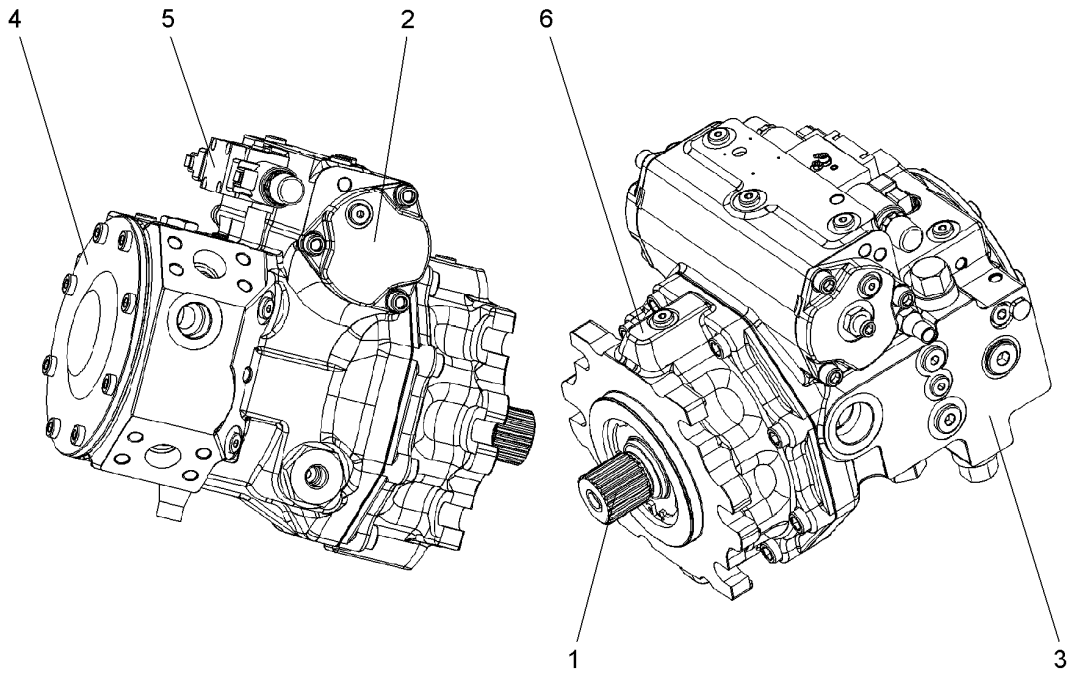

Pos.	Item	Quantity	Description	Bezeichnung	Serie	K
1	11219902	1	DRIVING GEAR ⇨ ❑ 100	TRIEBWERK		
2	11219905	1	ADJUSTMENT ⇨ ❑ 101	VERSTELLUNG		
3	11219910	1	PUMP HOUSING ⇨ ❑ 104	PUMPENGEHAEUSE		
4	11219350	1	PUMP COVER ⇨ ❑ 112	PUMPENDECKEL		
5	11219917	1	CONTROL GEAR ⇨ ❑ 113	STEUERGERAET		
6	11219918	1	BEARING FLANGE ⇨ ❑ 114	LAGERFLANSCH		

OHNE BILD
WITHOUT ILLUSTRATION
SANS PLANCHE
SIN FIG.
SEM ILUSTRAÇÃO
БЕЗ ИЗОБРАЖЕНИЯ

600000

Pos.	Item	Quantity	Description	Bezeichnung	Serie	K
1	11219920	1	DRIVING SHAFT	TRIEBWELLE		
2	11219922	1	CRADLE	WIEGE		
3	11219924	1	HYDRAULIC PARTS DRIVING GEAR	TRIEBWERK HYDRAULIKTEIL		
4	11219356	1	SEALING SET	DS		

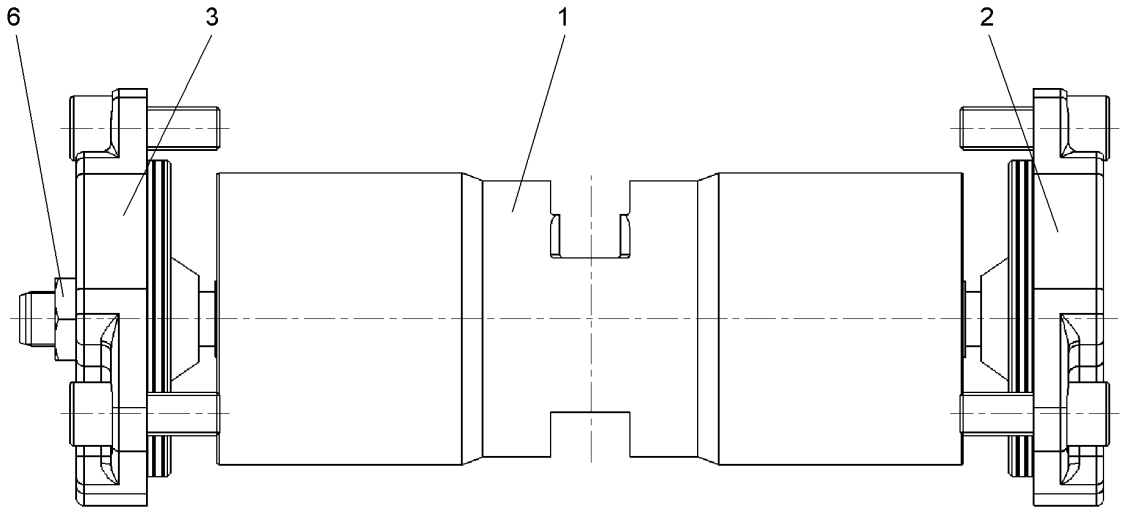

Pos.	Item	Quantity	Description	Bezeichnung	Serie	K
1	11219925	1	ADJUSTING PISTON	STELLKOLBEN		
2	11219927	1	COVER ⇨ ❑ 102	DECKEL		
3	11219929	1	COVER ⇨ ❑ 103	DECKEL		
6	4980793	1	HEX NUT ISO 8675 M16X1.5 4	SECHSKANTMUTTER		

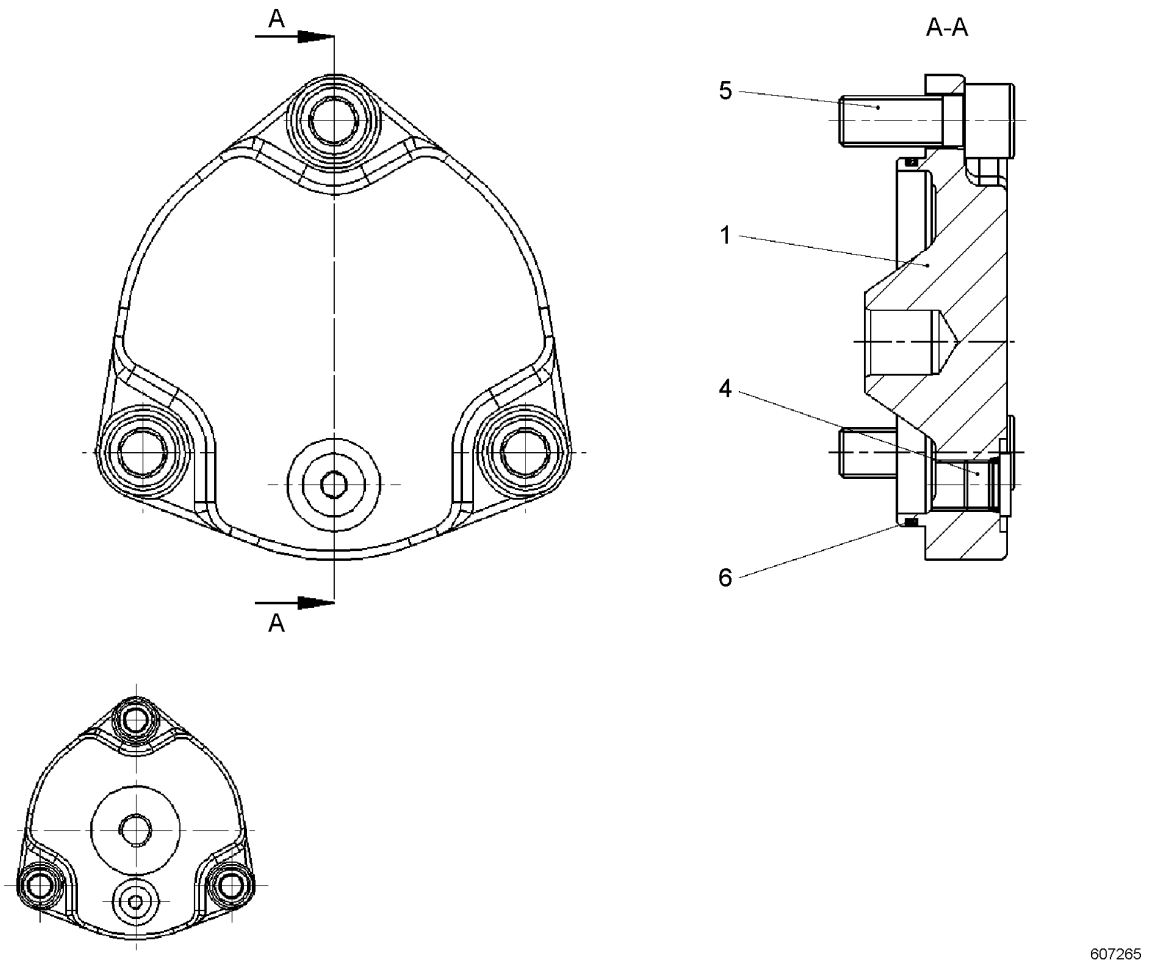

Pos.	Item	Quantity	Description	Bezeichnung	Serie	K
1	11267378	1	COVER	DECKEL		
4	10337050	1	SCREW PLUG M14X1.5 NBR	VERSCHLUSSSCHRAUBE		
5	11217079	3	SOCKET HEAD SCREW	ZYLINDERSCHRAUBE		
6	11267377	1	O-RING	O-RING		

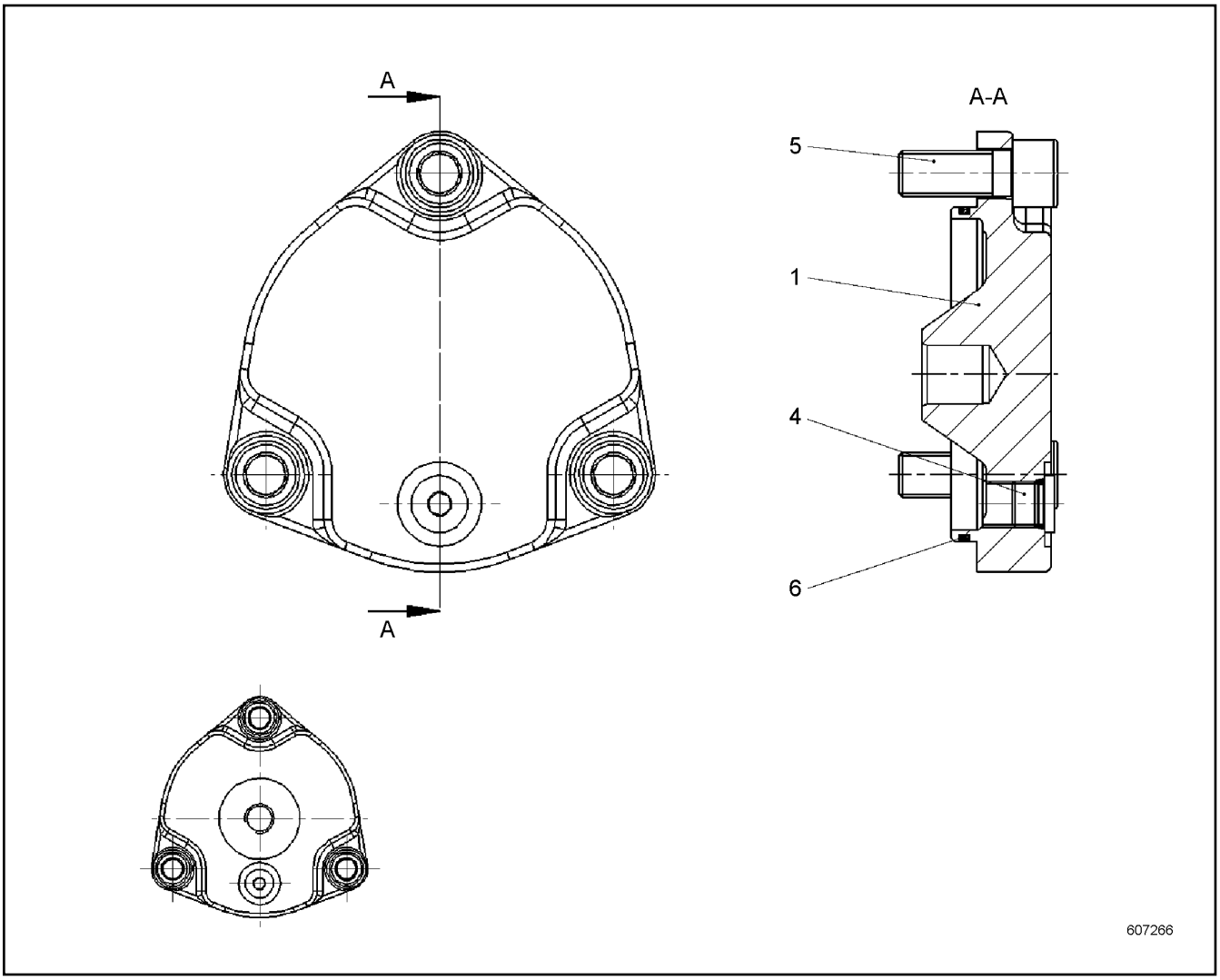

Pos.	Item	Quantity	Description	Bezeichnung	Serie	K
1	11267396	1	COVER	DECKEL		
4	10337050	1	SCREW PLUG M14X1.5 NBR	VERSCHLUSSSCHRAUBE		
5	11217079	3	SOCKET HEAD SCREW	ZYLINDERSCHRAUBE		
6	11267377	1	O-RING	O-RING		

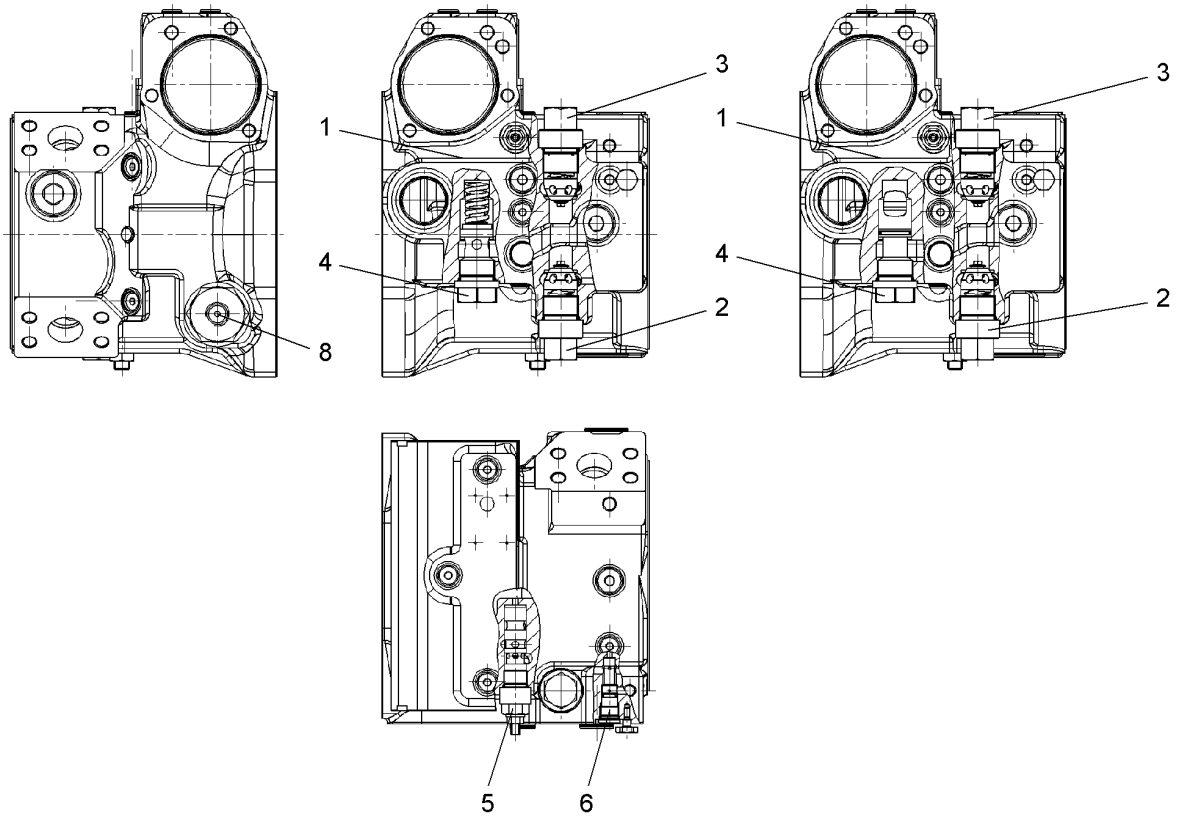

Pos.	Item	Quantity	Description	Bezeichnung	Serie	K
1	11219930	1	PUMP HOUSING ⇨ ❑ 105	PUMPENGEHAEUSE		
2	11219368	1	PRESSURE LIMITING VALVE	DRUCKBEGRENZUNGSVENTIL		
3	10593474	1	PRESSURE LIMITING VALVE ⇨ ❑ 107	DRUCKBEGRENZUNGSVENTIL		
4	11219369	1	LOCKING SET ⇨ ❑ 108	VERSCHLUSSATZ		
5	11067304	1	SHUTDOWN VALVE ⇨ ❑ 109	ABSCHALTVENTIL		
6	11067305	1	SHUTTLE VALVE ⇨ ❑ 110	WECHSELVENTIL		
8	11219933	1	PANEL SCREW	BLENDENSCHRAUBE		

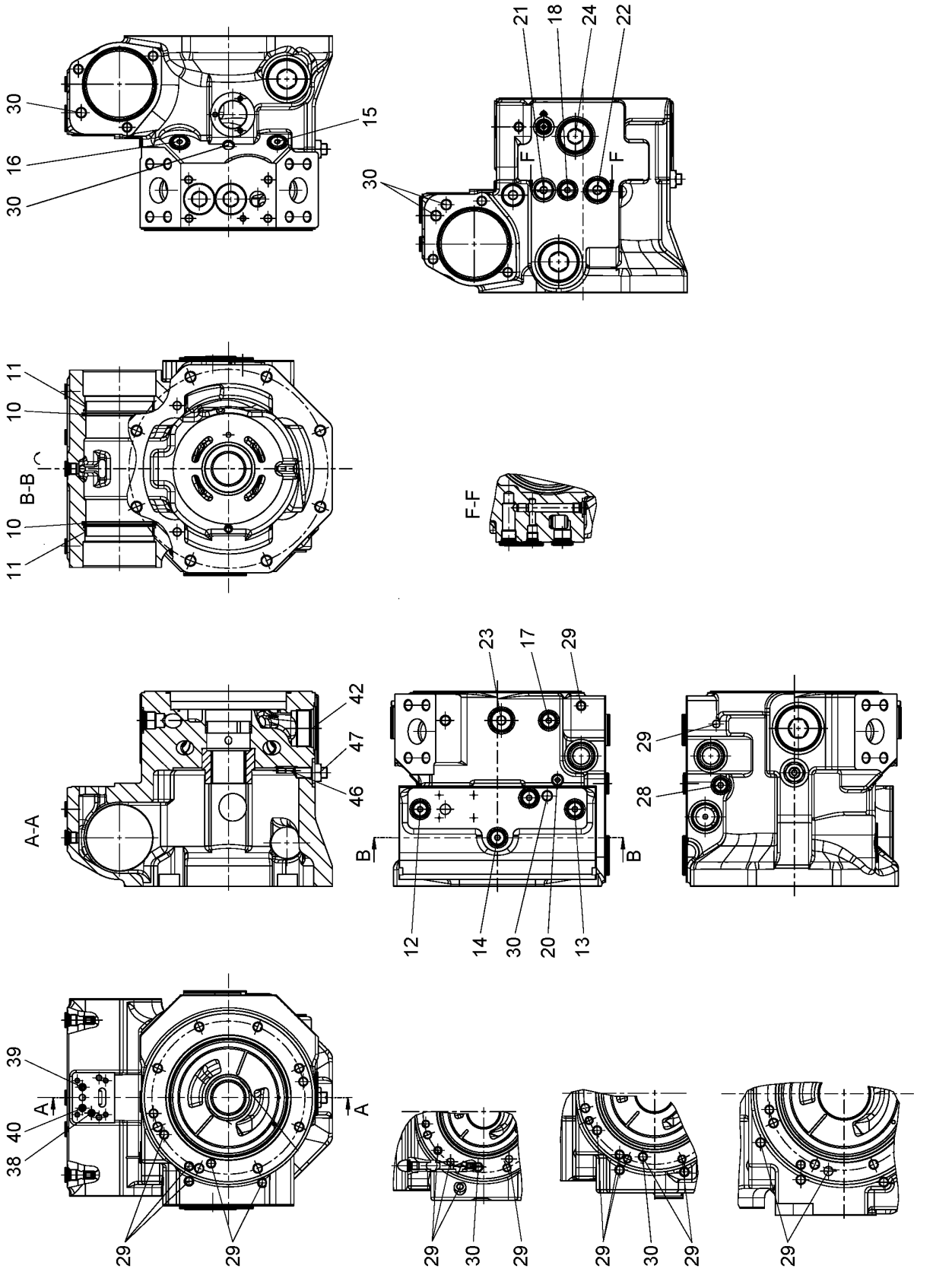
30
16
30
15
21
18
24
22
F
F
30
11
10
B-B
10
11
F-F
23
17
29
42
47
46
A-A
B
B
29
28
12
14
30
20
13
39
A
40
38
A
29
29
29
30
29
29
30
29
29
607268

Pos.	Item	Quantity	Description	Bezeichnung	Serie	K
10	11267400	2	BAR SEAL KIT	STANGENDICHTSATZ		
11	11267401	2	GUIDE RING	FUEHRUNGSRING		
12	10337050	1	SCREW PLUG M14X1.5 NBR	VERSCHLUSSSCHRAUBE		
13	10337050	1	SCREW PLUG M14X1.5 NBR	VERSCHLUSSSCHRAUBE		
14	10337050	1	SCREW PLUG M14X1.5 NBR	VERSCHLUSSSCHRAUBE		
15	10337050	1	SCREW PLUG M14X1.5 NBR	VERSCHLUSSSCHRAUBE		
16	10337050	1	SCREW PLUG M14X1.5 NBR	VERSCHLUSSSCHRAUBE		
17	10337050	1	SCREW PLUG M14X1.5 NBR	VERSCHLUSSSCHRAUBE		
18	10337050	1	SCREW PLUG M14X1.5 NBR	VERSCHLUSSSCHRAUBE		
20	11267402	1	SCREW PLUG	VERSCHLUSSSCHRAUBE		
21	10337052	1	SCREW PLUG M18X1.5 NBR	VERSCHLUSSSCHRAUBE		
22	10349193	1	SCREW PLUG M22X1.5	VERSCHLUSSSCHRAUBE		
23	10349193	1	SCREW PLUG M22X1.5	VERSCHLUSSSCHRAUBE		
24	10289931	1	SCREW PLUG M33X2 NBR	VERSCHLUSSSCHRAUBE		
28	11267403	1	SCREW PLUG	VERSCHLUSSSCHRAUBE		
29	7012971	3	DOUBLE PLUG	DOPPELABREISSSTOPFEN		
30	10424238	3	DOUBLE PLUG	DOPPELABREISSSTOPFEN		
38	11490265	1	FILTER	FILTER		
39	11490265	1	FILTER	FILTER		
40	11490265	1	FILTER	FILTER		
42	10525039	1	SCREW PLUG M48X2	VERSCHLUSSSCHRAUBE		
46	11267405	1	ECCENTRIC SCREW	EXZENTERSCHRAUBE		
47	514618508	1	COLLAR NUT M14X1.5	BUNDMUTTER		

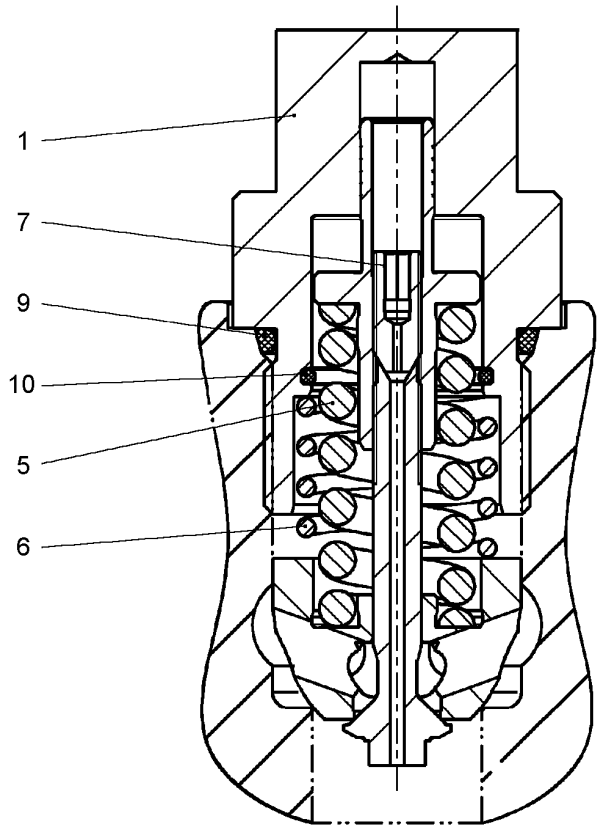

Pos.	Item	Quantity	Description	Bezeichnung	Serie	K
1	11267415	1	SCREW PLUG	VERSCHLUSSSCHRAUBE		
5	7028143	1	PRESSURE SPRING	DRUCKFEDER		
6	11267416	1	PRESSURE SPRING	DRUCKFEDER		
7	11267417	1	GRUB SCREW	GEWINDESTIFT		
9	11267418	1	O-RING	O-RING		
10	7007492	1	O-RING	O-RING		

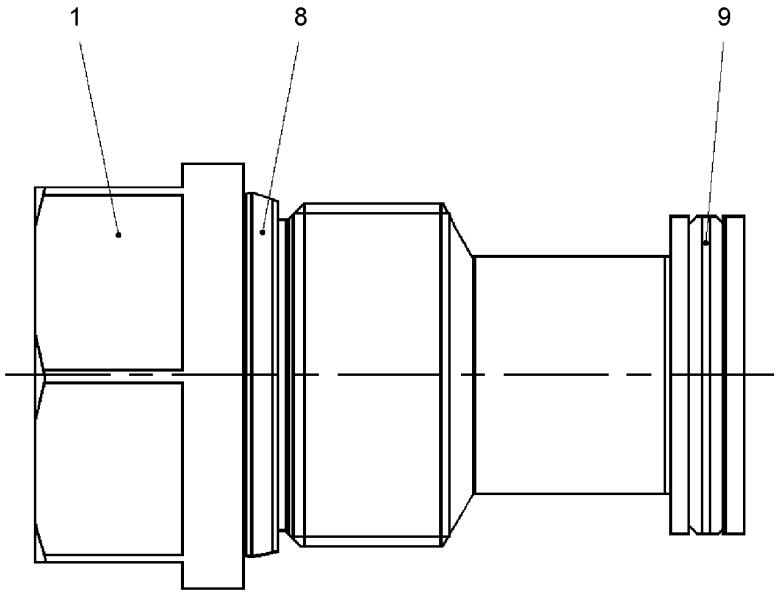

Pos.	Item	Quantity	Description	Bezeichnung	Serie	K
1	11267421	1	SCREW PLUG	VERSCHLUSSSCHRAUBE		
8	11267418	1	O-RING	O-RING		
9	7006213	1	O-RING	O-RING		

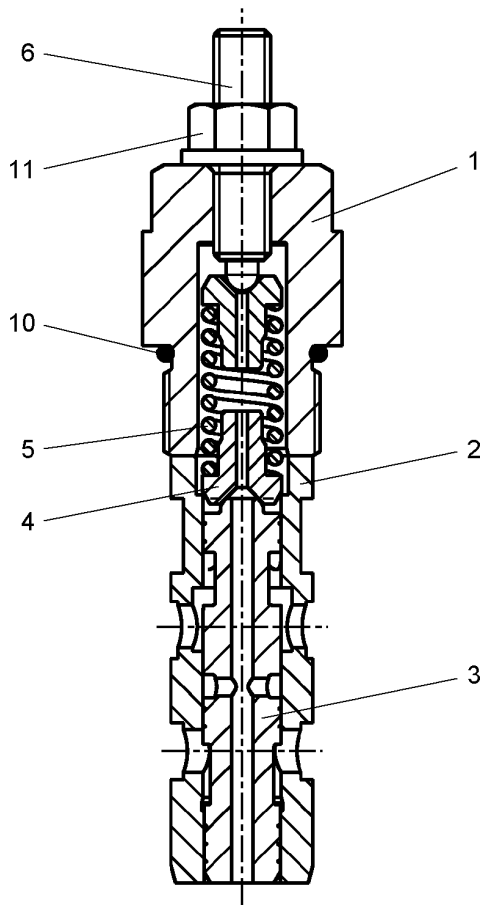

Pos.	Item	Quantity	Description	Bezeichnung	Serie	K
1	11267439	1	SCREW PLUG	VERSCHLUSSSCHRAUBE		
2	11267440	1	SLEEVE	HUELSE		
3	11600281	1	SPOOL	STEUERKOLBEN		
4	11267441	2	SPRING SUPPORT	FEDERTELLER		
5	11267442	1	PRESSURE SPRING	DRUCKFEDER		
6	10599567	1	ADJUSTING SCREW	EINSTELLSCHRAUBE		
10	11212730	1	O-RING	O-RING		
11	7361601	1	GROMMET NUT M8	DICHTUNGSMUTTER		

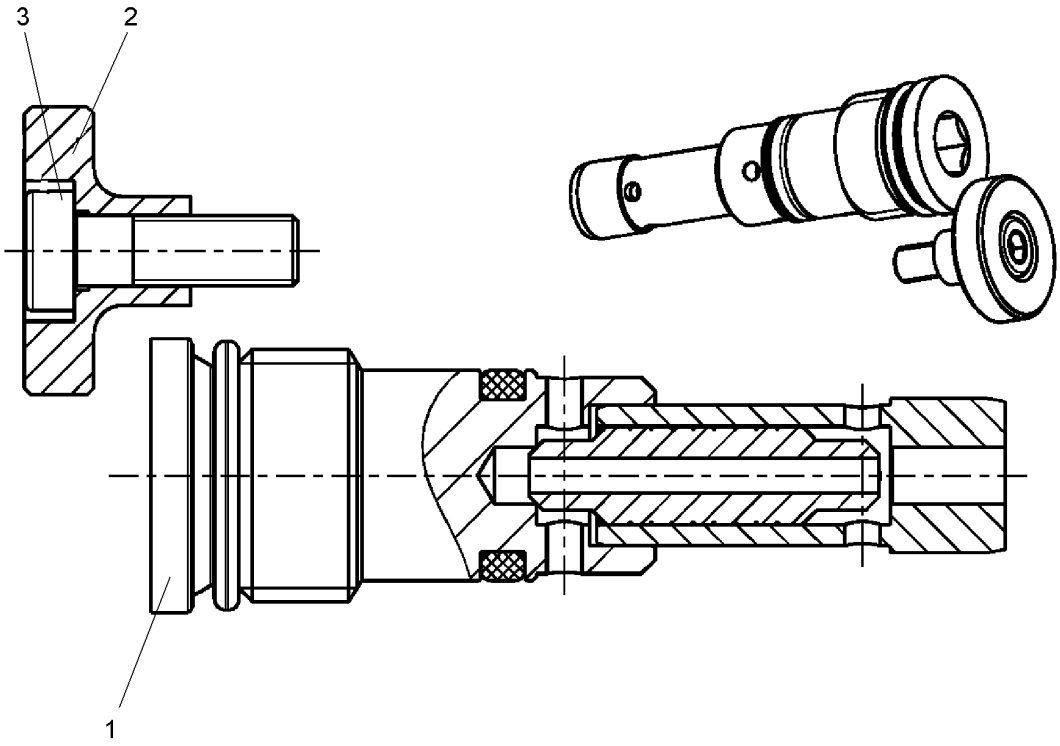

Pos.	Item	Quantity	Description	Bezeichnung	Serie	K
1	11267447	1	SHUTTLE VALVE ⇨ ❑ 111	WECHSELVENTIL		
2	11913115	1	LIMIT STOP	ANSCHLAG		
3	11913116	1	SOCKET HEAD SCREW	ZYLINDERSCHRAUBE		

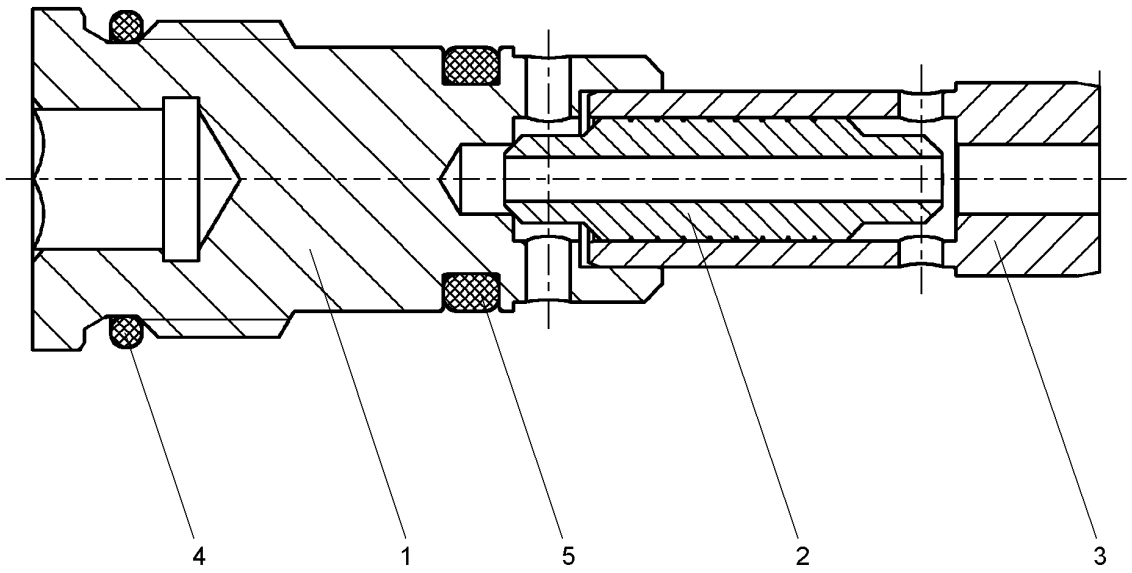

609137

Pos.	Item	Quantity	Description	Bezeichnung	Serie	K
1	11267451	1	SCREW PLUG	VERSCHLUSSSCHRAUBE		
2	11913123	1	PISTON	KOLBEN		
3	11267453	1	SLEEVE	HUELSE		
4	10097551	1	O-RING	O-RING		
5	726429814	1	O-RING	O-RING		

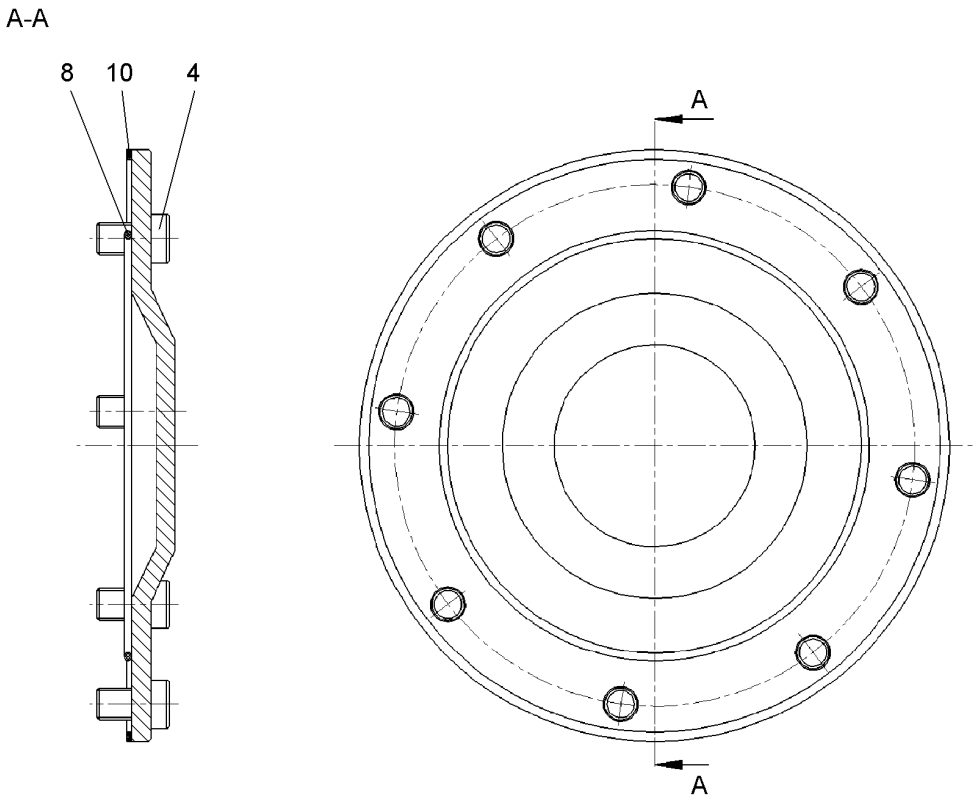

Pos.	Item	Quantity	Description	Bezeichnung	Serie	K
4	11219373	8	SOCKET HEAD SCREW	ZYLINDERSCHRAUBE		
8	11219374	1	O-RING	O-RING		
10	11267455	1	RING	RING		

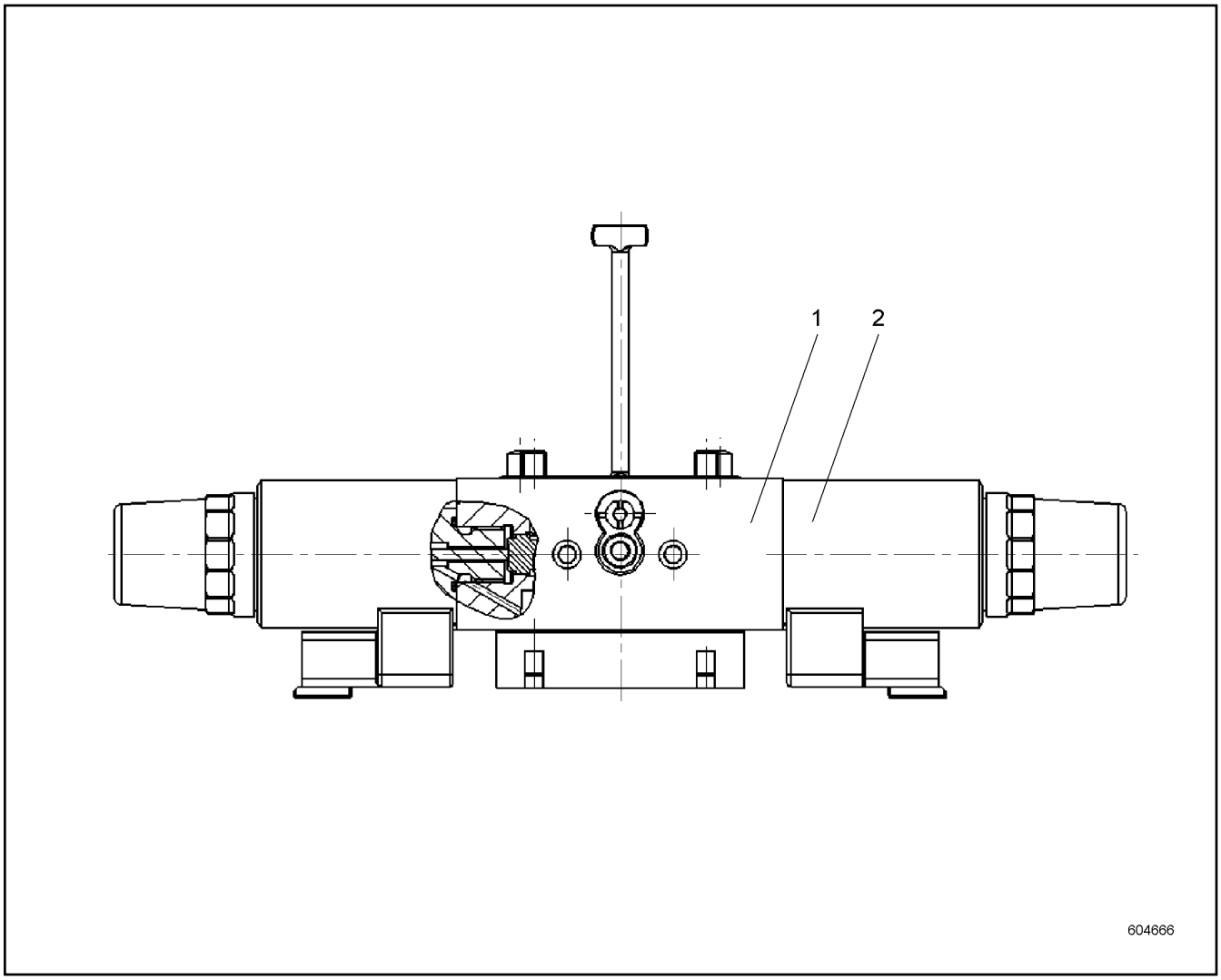

Pos.	Item	Quantity	Description	Bezeichnung	Serie	K
1	11219934	1	CONTROL UNIT	ANSTEUERGERAET		
2	11219375	2	PROPORTIONAL MAGNET	PROPORTIONALMAGNET		

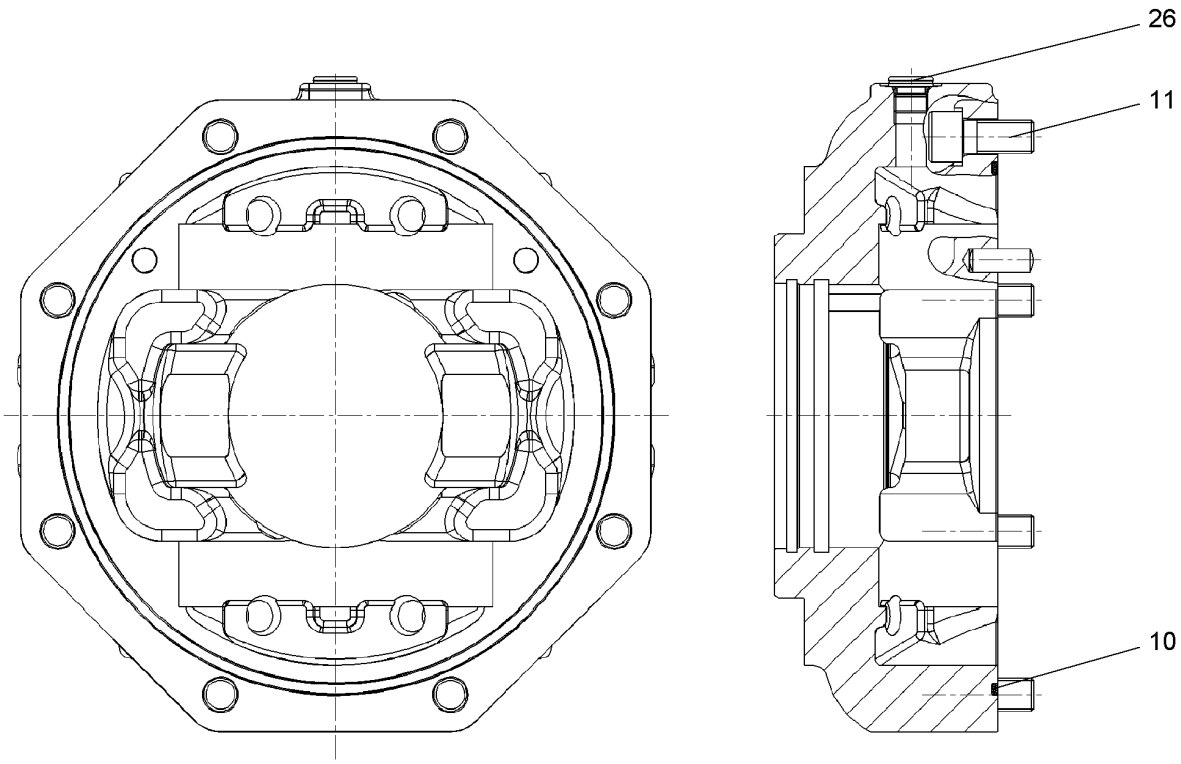

Pos.	Item	Quantity	Description	Bezeichnung	Serie	K
10	11219376	1	O-RING	O-RING		
11	11219936	8	SOCKET HEAD SCREW	ZYLINDERSCHRAUBE		
26	10337050	1	SCREW PLUG M14X1.5 NBR	VERSCHLUSSSCHRAUBE		

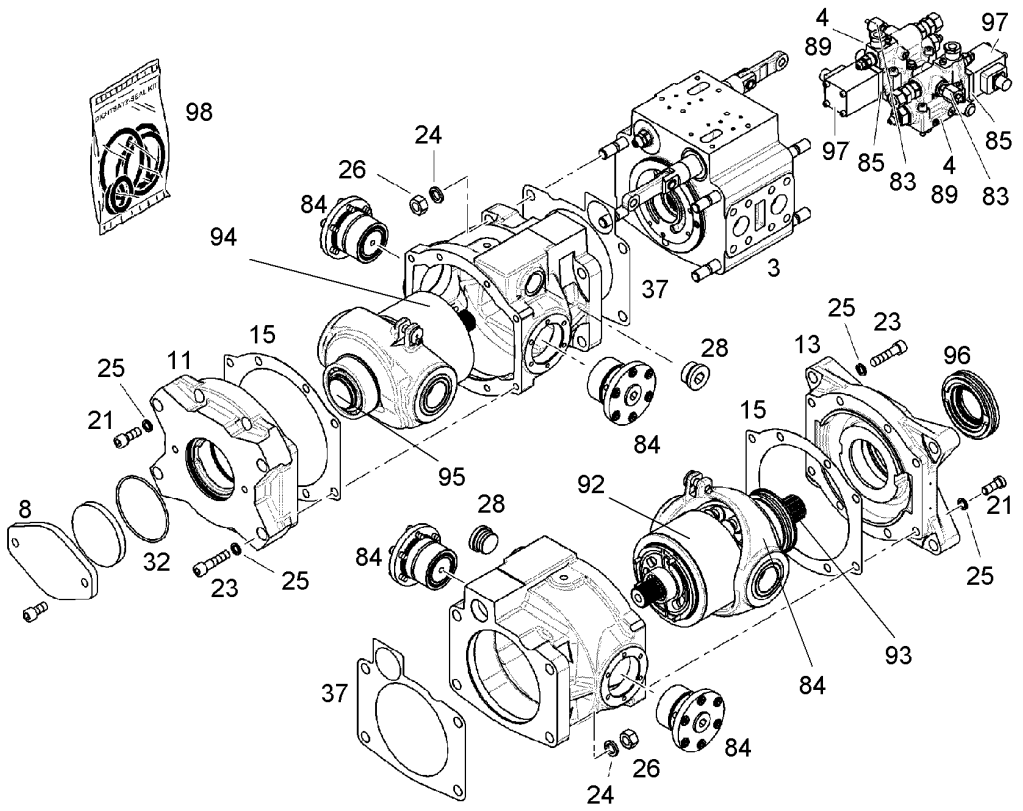

Pos.	Item	Quantity	Description	Bezeichnung	Serie	K
3	10118350	1	CONNECTION HOUSING ⇨ ❑ 117	ANSCHLUSSGEHAEUSE		
4	9074418	2	REGULATING VALVE ⇨ ❑ 121	REGELVENTIL		
8	10133334	1	COVER ⇨ ❑ 123	DECKEL		
11	9276385	1	CONNECTION FLANGE	ANSCHLUSSFLANSCH		
13	9268423	1	CONNECTION FLANGE	ANSCHLUSSFLANSCH		
15	9882207	2	SEAL	DICHTUNG		
21	4043163	8	SOCKET HEAD SCREW ISO 4762 M12X30 10.9	ZYLINDERSCHRAUBE		
23	10012659	8	SOCKET HEAD SCREW ISO 4762 M12X50 10.9	ZYLINDERSCHRAUBE		
24	4239009	8	LOCK WASHER 17X24X2.6	SICHERUNGSSCHEIBE		
25	4980013	16	WASHER SPRING DIN 7980 12 FST	FEDERRING		
26	4980548	8	HEX NUT ISO 8673 M16X1.5 10	SECHSKANTMUTTER		
28	10137121	2	SCREW PLUG	VERSCHLUSSSCHRAUBE		
32	7004512	1	O-RING	O-RING		
37	9276860	2	FLAT GASKET	FLACHDICHTUNG		
83	10118367	1	RK PRESSUR CUT-OFF ⇨ ❑ 124	RS DRUCKABSCHNEIDUNG		
84	10139752	1	REPAIR SET SWIVEL YOKE ⇨ ❑ 126	RS SCHWENKJOCH		
85	9275443	1	REPAIR SET LID ⇨ ❑ 129	RS DECKEL		
89	9273644	1	SEAL KIT REGULATING VALVE ⇨ ❑ 122	DS REGELVENTIL		

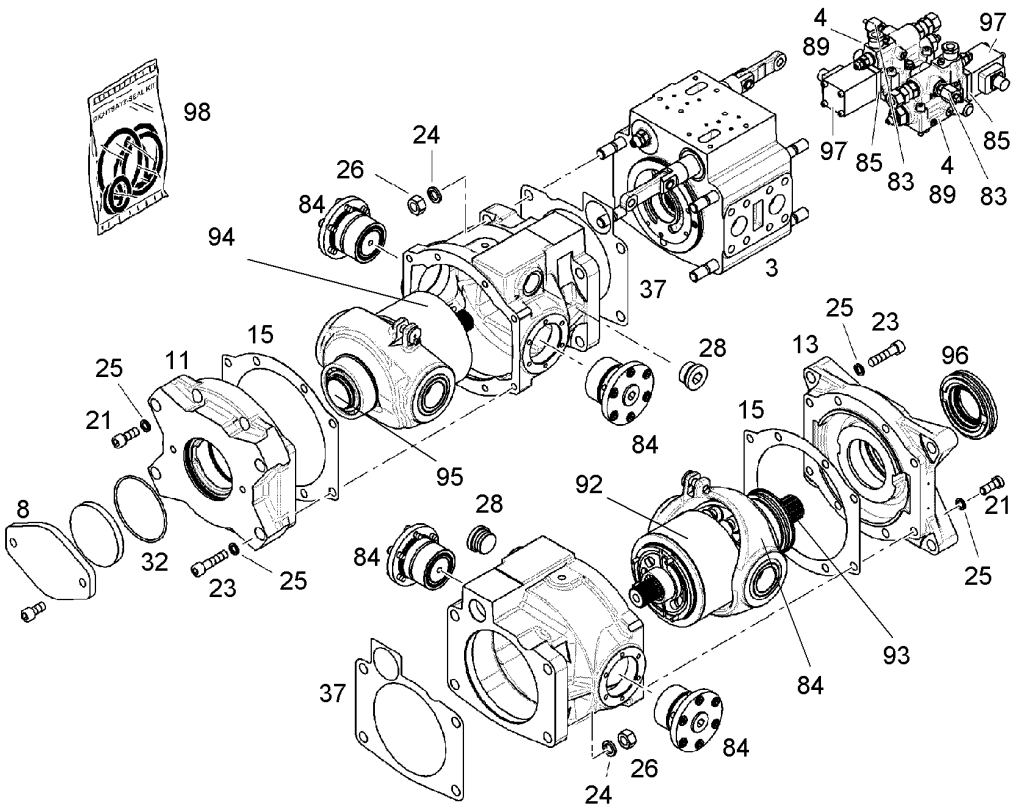

Pos.	Item	Quantity	Description	Bezeichnung	Serie	K
92	9889984	1	REPAIR KIT DRIVING MECHANISM ⇨ ❑ 130	RS TRIEBWERK		
93	9889977	1	REPAIR KIT SHAFT	RS WELLE		
94	9889983	1	REPAIR KIT DRIVING MECHANISM ⇨ ❑ 133	RS TRIEBWERK		
95	9884402	1	REPAIR KIT SHAFT ⇨ ❑ 135	RS WELLE		
96	9268016	1	REPAIR KIT LOCK RING ⇨ ❑ 136	RS VERSCHLUSSRING		
97	9273187	1	REPAIR KIT MAGNET ⇨ ❑ 137	RS MAGNET		
98	9276408	1	SEAL KIT DOUBLE PUMP ⇨ ❑ 138	DS DOPPELPUMPE		

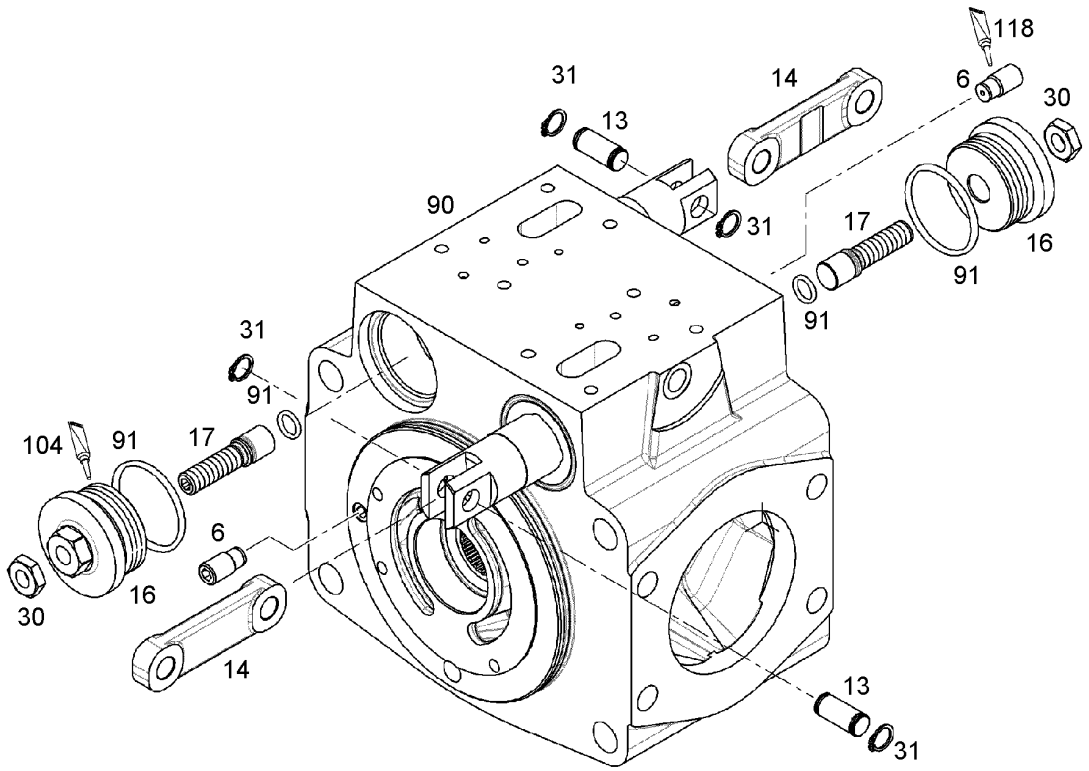

Pos.	Item	Quantity	Description	Bezeichnung	Serie	K
6	9267343	2	VENTILATION VALVE ⇨ ❑ 118	ENTLUEFTUNGSVENTIL		
13	9477439	2	PIN	BOLZEN		
14	9887828	2	CONNECTING LINK	VERBINDUNGSLASCHE		
16	9885660	2	SCREW PLUG M48X2	VERSCHLUSSSCHRAUBE		
17	9885661	2	LIMIT STOP SCREW M12X38 42CRM04	ANSCHLAGSCHRAUBE		
30	4900125	2	HEX NUT ISO 4035 M12 5	SECHSKANTMUTTER		
31	4280008	4	LOCKING RING DIN 471 12X1	SICHERUNGSRING		
90	10118357	1	REPAIR KIT CONNECTION HOUSING ⇨ ❑ 119	RS ANSCHLUSSGEHAEUSE		
91	9274731	1	SEAL KIT CONNECTING HOUSING ⇨ ❑ 120	DS ANSCHLUSSGEHAEUSE		
104	811202114	1	SCREW LOCKING	SCHRAUBENSICHERUNG		
118	8655023	1	GLUE	KLEBSTOFF		

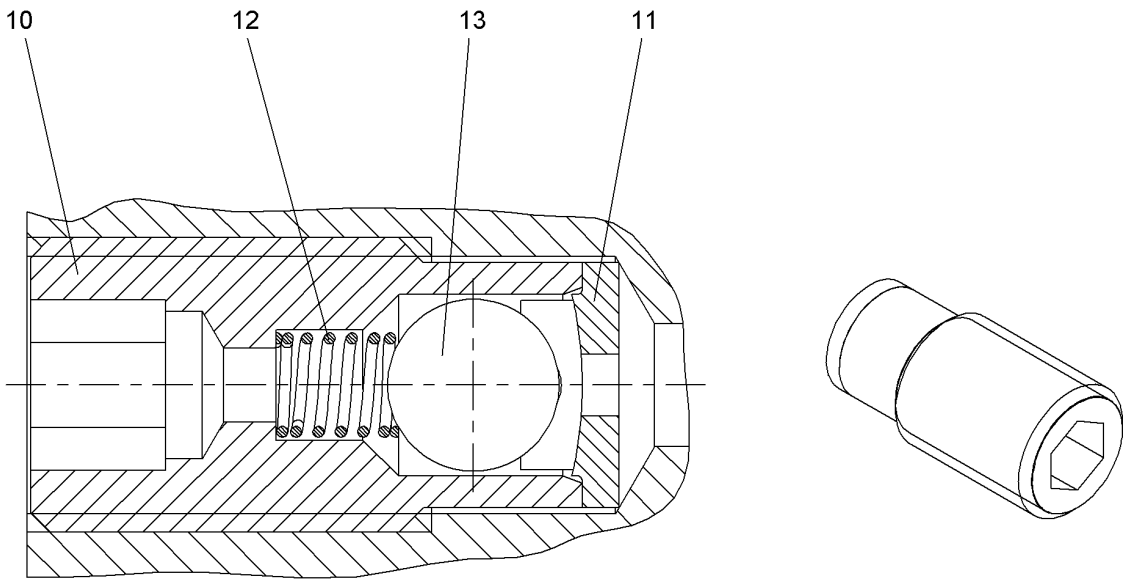

Pos.	Item	Quantity	Description	Bezeichnung	Serie	K
10	9267340	1	VALVE SLEEVE	VENTILHUELSE		
11	9267341	1	RING	RING		
12	9267342	1	PRESSURE SPRING	DRUCKFEDER		
13	4901195	1	BALL	KUGEL		

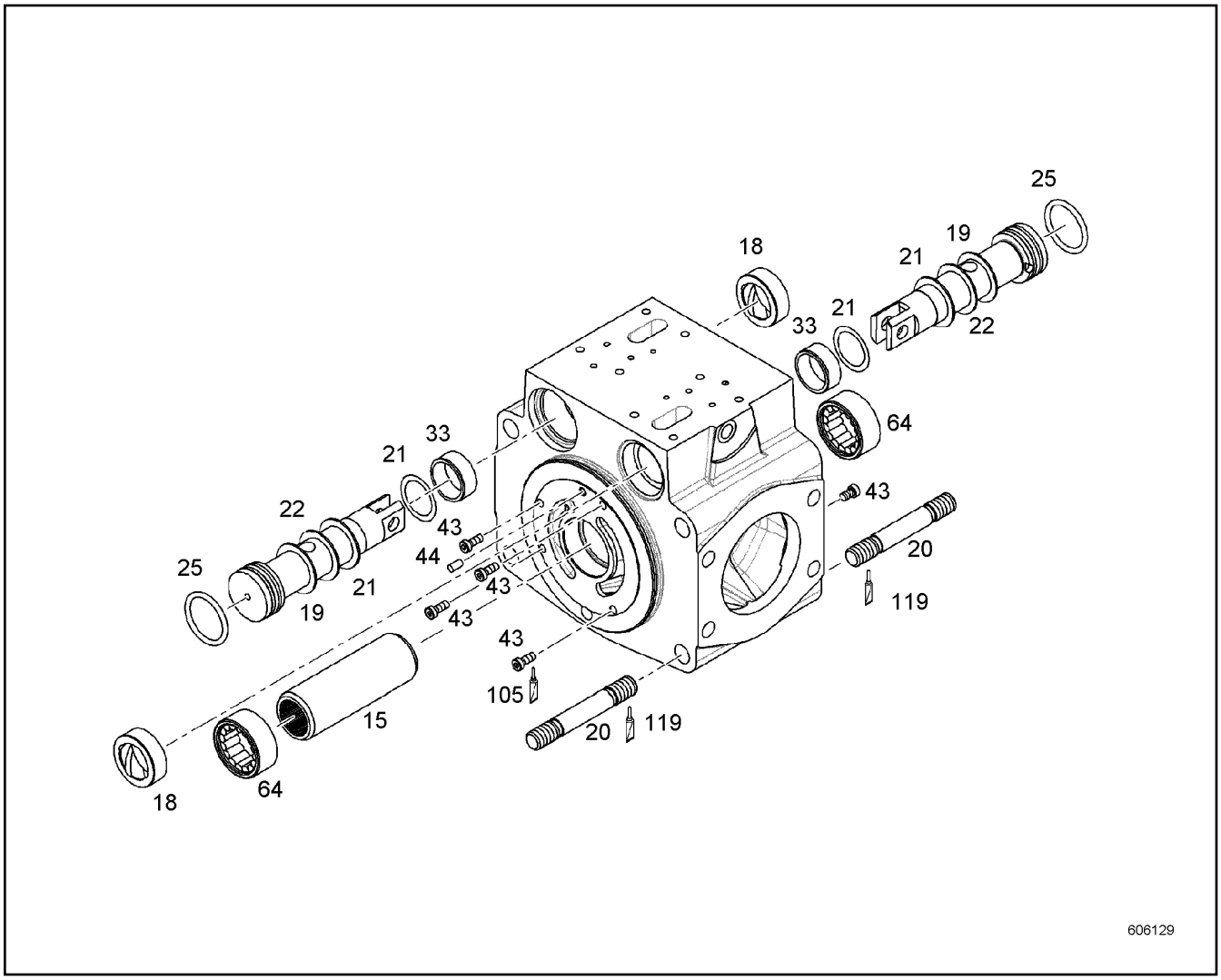

Pos.	Item	Quantity	Description	Bezeichnung	Serie	K
15	9073827	1	COUPLING FERRULE	KUPPLUNGSHUELSE		
18	9266680	2	GUIDE RING	FUEHRUNGSRING		
19	7380291	2	SUPPORTING WASHER S32X44X2 FST	STUETZSCHEIBE		
20	9275003	8	DOUBLE-ENDED STUD M16X1.5	STIFTSCHRAUBE		
21	7380815	4	SUPPORTING WASHER S32X44X0.5 FST	STUETZSCHEIBE		
22	7380586	2	SUPPORTING WASHER S32X44X1.3 FST	STUETZSCHEIBE		
25	10285620	2	SEALING RING	MANTELRING		
33	9881114	2	GUIDE RING	FUEHRUNGSRING		
43	4981218	8	SOCKET HEAD SCREW ISO 14580 M6X16 10.9	ZYLINDERSCHRAUBE		
44	4980046	2	PARALLEL PIN ISO 8734 5M6X12 ST	ZYLINDERSTIFT		
64	7469905	2	CYL.NEEDLE BEARING	ZYLINDERNADELLAGER		
105	8655016	1	SCREW LOCKING	SCHRAUBENSICHERUNG		
119	8655032	1	GLUE	KLEBSTOFF		

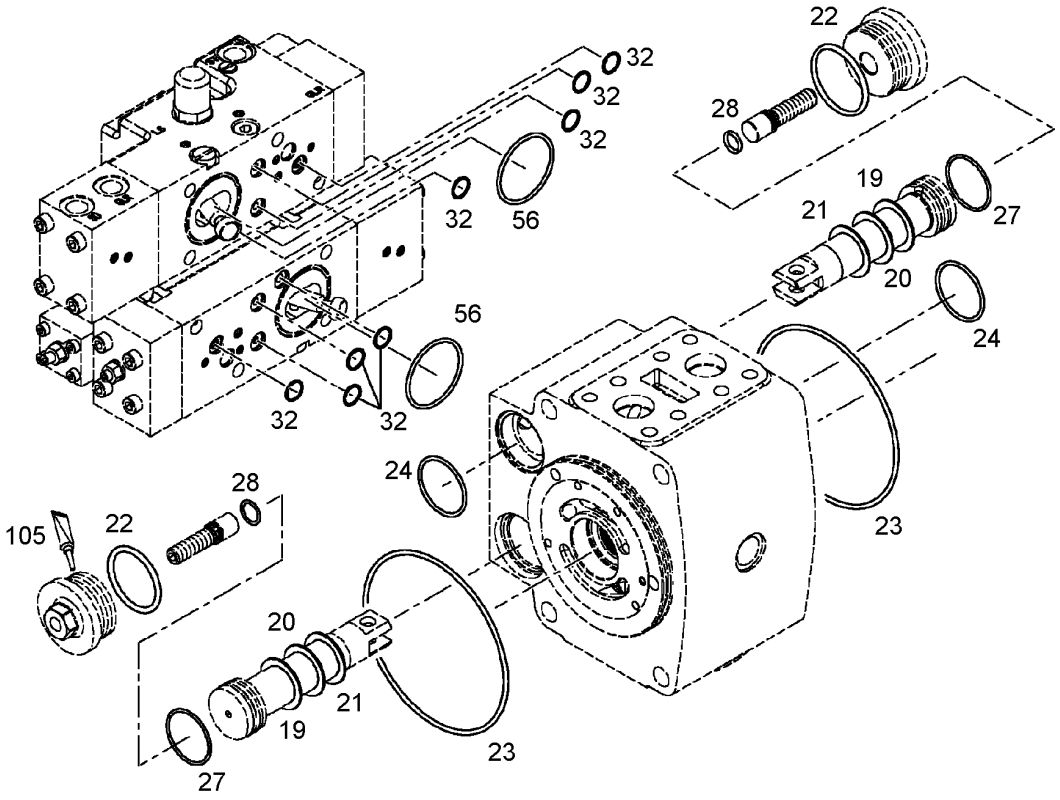

Pos.	Item	Quantity	Description	Bezeichnung	Serie	K
19	7380291	2	SUPPORTING WASHER S32X44X2 FST	STUETZSCHEIBE		
20	7380586	2	SUPPORTING WASHER S32X44X1.3 FST	STUETZSCHEIBE		
21	7380815	4	SUPPORTING WASHER S32X44X0.5 FST	STUETZSCHEIBE		
22	7380015	2	O-RING	O-RING		
23	7000329	2	O-RING	O-RING		
24	7380348	2	O-RING	O-RING		
27	10285620	2	SEALING RING	MANTELRING		
28	7380120	2	O-RING	O-RING		
32	7380648	10	O-RING	O-RING		
56	7380888	2	O-RING	O-RING		
105	8655016	1	SCREW LOCKING	SCHRAUBENSICHERUNG		

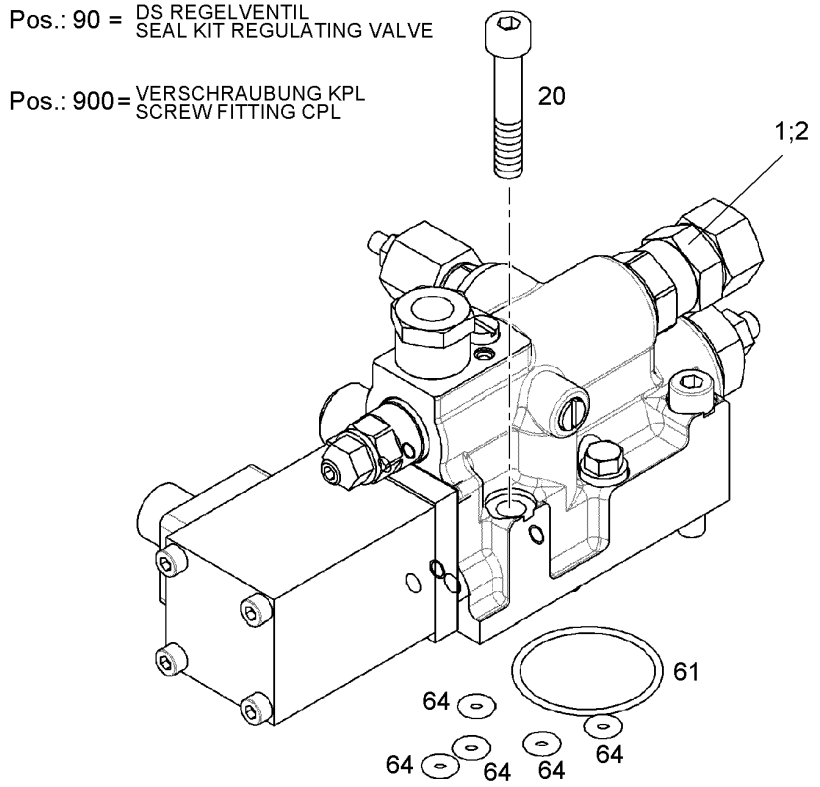

Pos.	Item	Quantity	Description	Bezeichnung	Serie	K
1	10121091	1	ADAPTOR	ADAPTER		
2	7381367	1	SEALING RING	DICHTRING		
20	4980840	4	SOCKET HEAD SCREW ISO 4762 M8X45 12.9	ZYLINDERSCHRAUBE		
61	7380888	1	O-RING	O-RING		
64	7380648	5	O-RING	O-RING		
90	9273644	1	SEAL KIT REGULATING VALVE ⇨ ❑ 122	DS REGELVENTIL		
900	11253240	1	SCREW FITTING CPL	VERSCHRAUBUNG KPL		

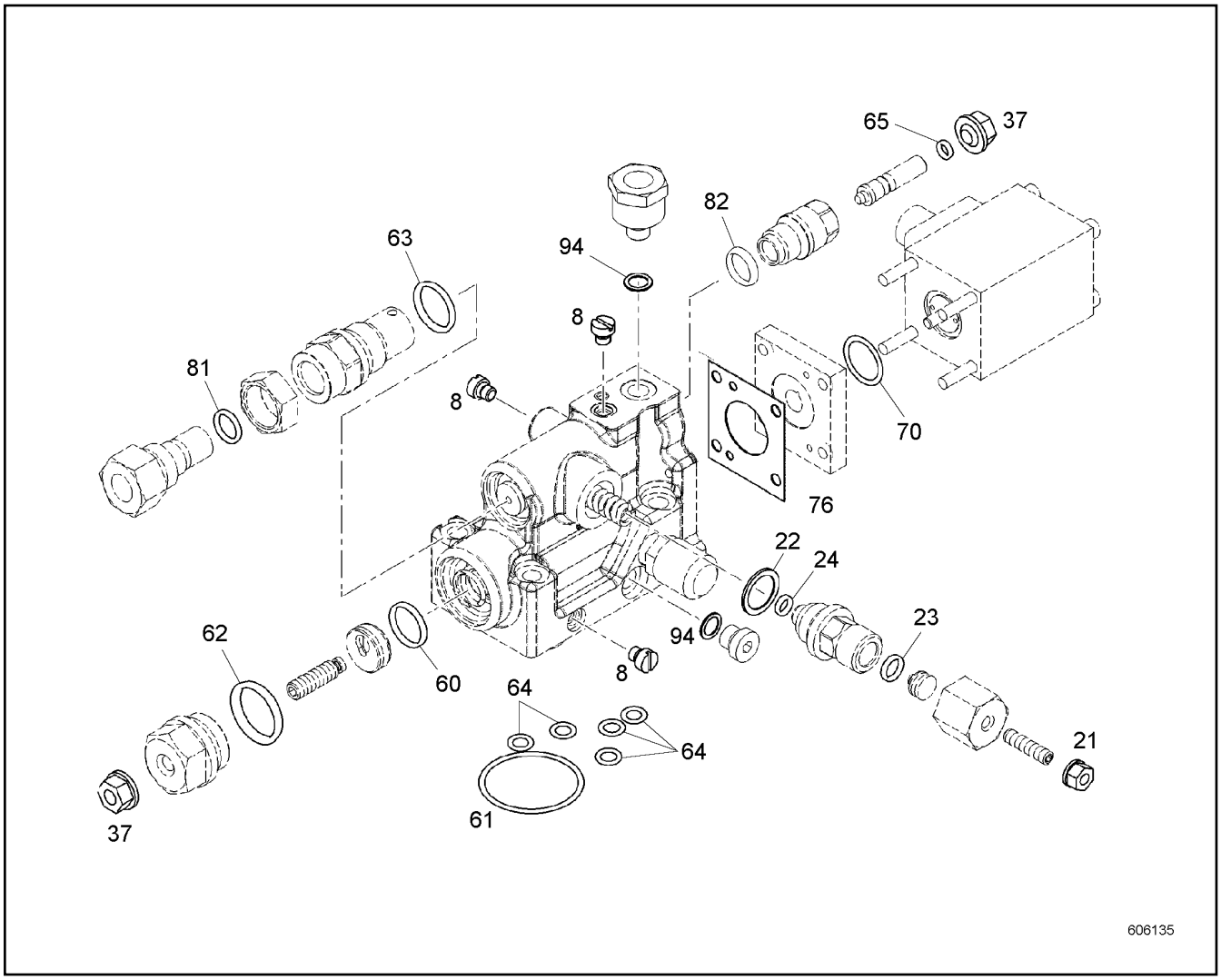

Pos.	Item	Quantity	Description	Bezeichnung	Serie	K
8	9268441	3	SCREW PLUG M6	VERSCHLUSSSCHRAUBE		
21	7361600	1	GROMMET NUT M6	DICHTUNGSMUTTER		
22	7013116	1	SEALING RING	DICHTRING		
23	7381442	1	O-RING	O-RING		
24	7381056	1	O-RING	O-RING		
37	7361601	2	GROMMET NUT M8	DICHTUNGSMUTTER		
60	7381103	1	O-RING	O-RING		
61	7380888	1	O-RING	O-RING		
62	7380865	1	O-RING	O-RING		
63	7381087	1	O-RING	O-RING		
64	7380648	5	O-RING	O-RING		
65	7380612	1	O-RING	O-RING		
70	7380868	1	O-RING	O-RING		
76	9275428	1	SEAL	DICHTUNG		
81	7380596	1	O-RING	O-RING		
82	7381082	1	O-RING	O-RING		
94	7381367	2	SEALING RING	DICHTRING		

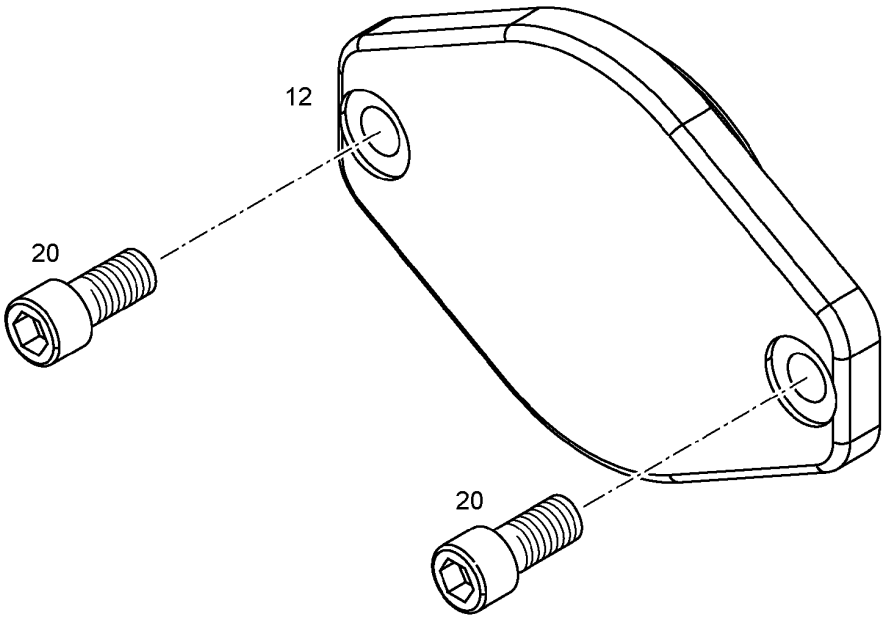

Pos.	Item	Quantity	Description	Bezeichnung	Serie	K
12	10134561	1	COVER	DECKEL		
20	4980938	2	SOCKET HEAD SCREW ISO 4762 M12X25 8.8	ZYLINDERSCHRAUBE		

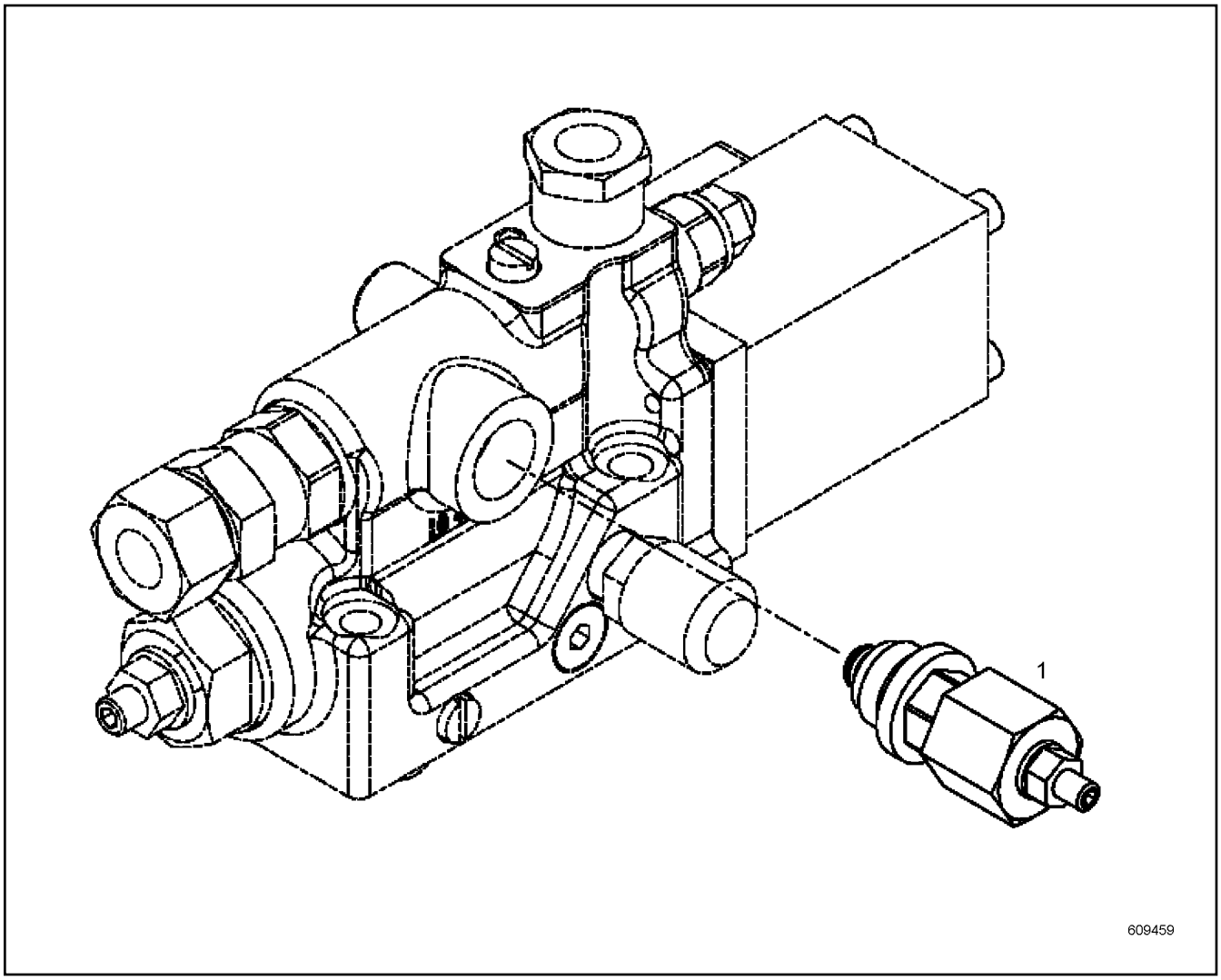

Pos.	Item	Quantity	Description	Bezeichnung	Serie	K
1	9278875	1	PRESSURE CUT-OFF ⇨ ❑ 125	DRUCKABSCHNEIDUNG		

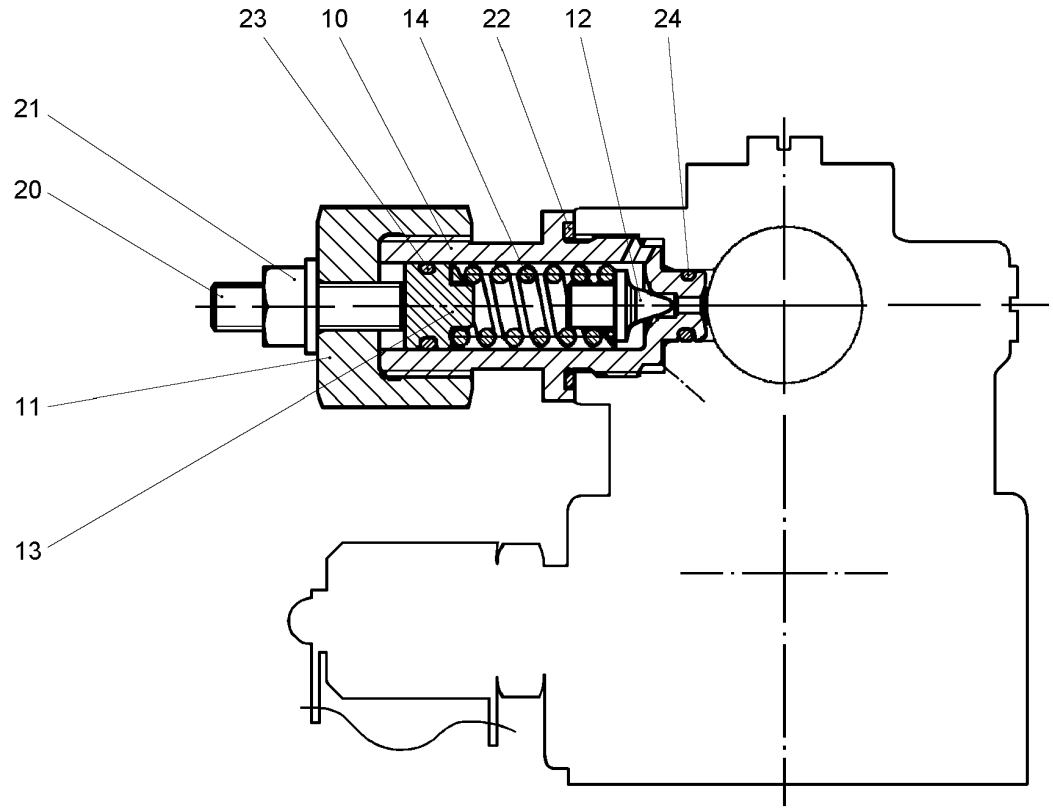

Pos.	Item	Quantity	Description	Bezeichnung	Serie	K
10	9278874	1	VALVE SEAT	VENTILSITZ		
11	9278873	1	NUT M18X1.5 9SMNPB28K	MUTTER		
12	9266085	1	TAPER	KEGEL		
13	9278876	1	SPRING SUPPORT	FEDERTELLER		
14	9266088	1	PRESSURE SPRING	DRUCKFEDER		
20	4980900	1	GRUB SCREW DIN 913 22H	GEWINDESTIFT		
21	7361600	1	GROMMET NUT M6	DICHTUNGSMUTTER		
22	7013116	1	SEALING RING	DICHTRING		
23	7381442	1	O-RING	O-RING		
24	7381056	1	O-RING	O-RING		

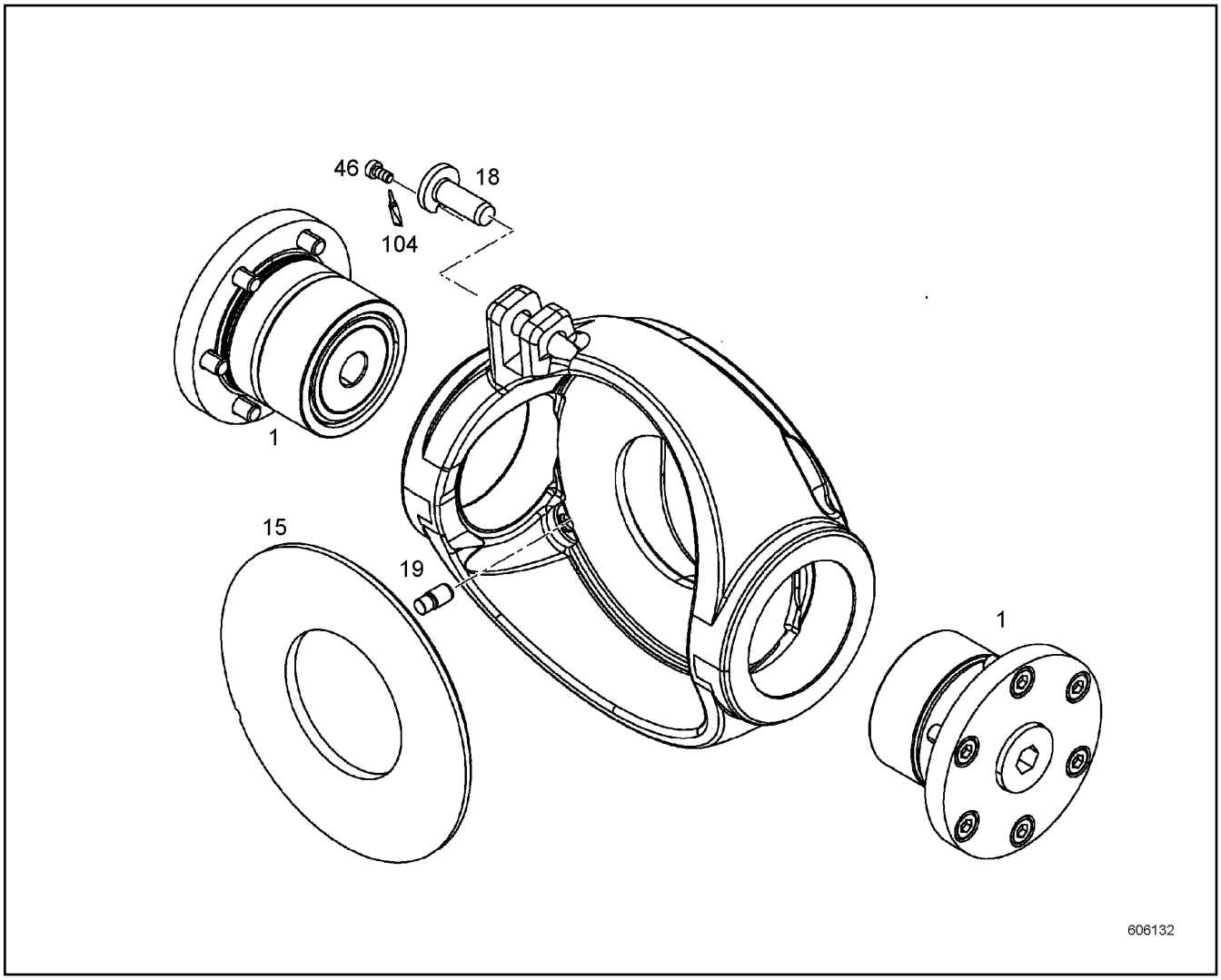

Pos.	Item	Quantity	Description	Bezeichnung	Serie	K
1	9077464	2	RS FLANGE ⇨ ❑ 127	RS FLANSCH		
15	9889809	1	SLIDING DISC 72X152X6	GLEITSCHEIBE		
18	9477429	1	PIN	BOLZEN		
19	9888133	1	PIN	STIFT		
46	4980750	1	SOCKET HEAD SCREW DIN 6912 8.8	ZYLINDERSCHRAUBE		
104	811202114	1	SCREW LOCKING	SCHRAUBENSICHERUNG		

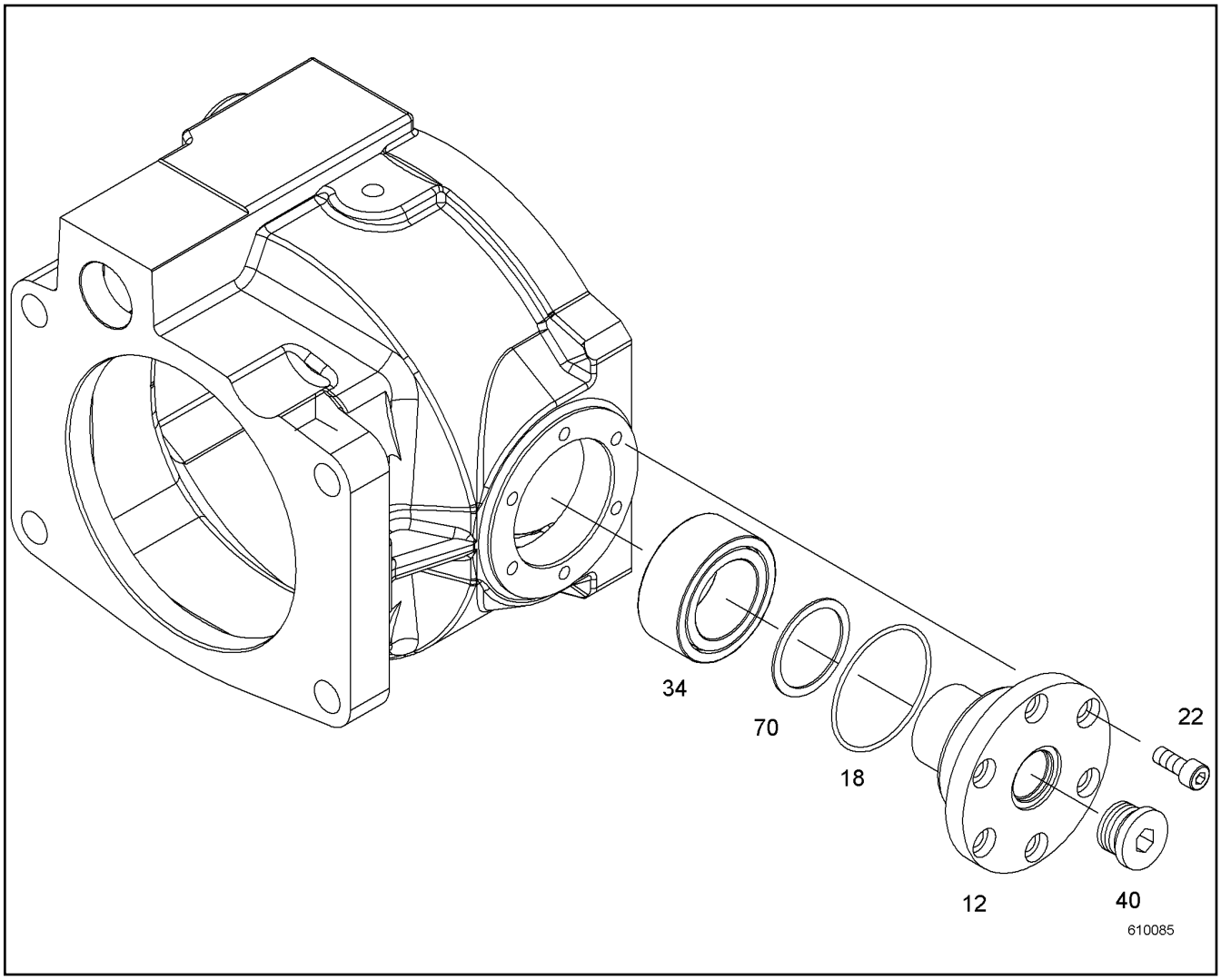

Pos.	Item	Quantity	Description	Bezeichnung	Serie	K
12	9072435	1	FLANGE	FLANSCH		
18	7380656	1	O-RING	O-RING		
22	240217402	6	SOCKET HEAD SCREW DIN 6912 M8X16 8.8	ZYLINDERSCHRAUBE		
34	7382149	1	CYL ROLLER BEARING	ZYL ROLLENLAGER		
40	10137108	1	SCREW PLUG	VERSCHLUSSSCHRAUBE		
70	9072436	1	SPACER RING SET	DISTANZRINGSATZ		
			⇨ ❑ 128			

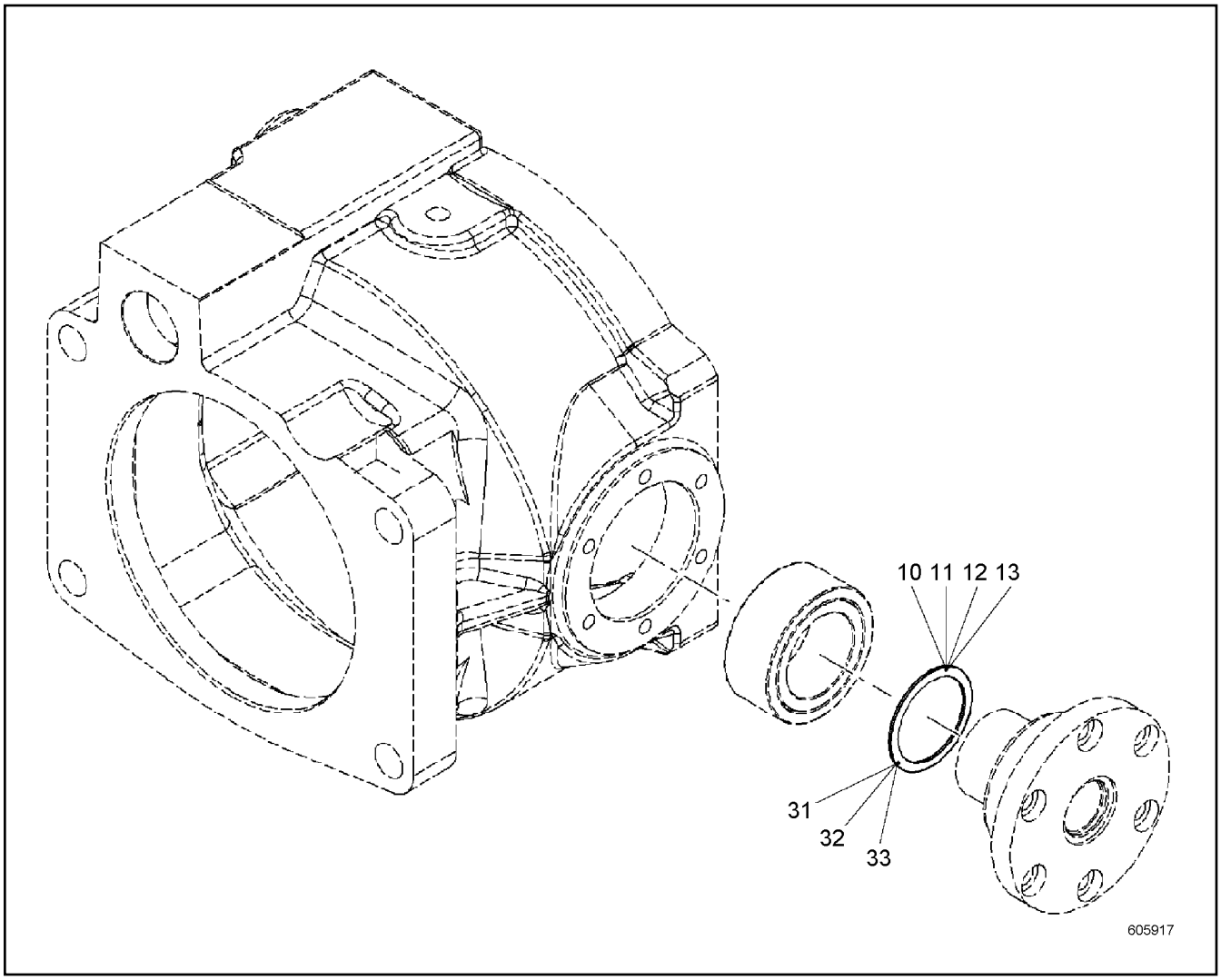

Pos.	Item	Quantity	Description	Bezeichnung	Serie	K
10	9072437	1	DISTANCE RING 42X51X1.3 CK75;DIN 17222	DISTANZRING		
11	9072438	1	DISTANCE RING 42X51X1.4 CK75;DIN 17222	DISTANZRING		
12	9072439	1	DISTANCE RING 42X51X1.5 CK75;DIN 17222	DISTANZRING		
13	9072440	1	DISTANCE RING 42X51X1.6 CK75;DIN 17222	DISTANZRING		
31	9074307	1	DISTANCE RING CK75;DIN 17222	DISTANZRING		
32	9074308	1	DISTANCE RING CK75;DIN 17222	DISTANZRING		
33	9074332	1	DISTANCE RING 42X51X1.9 CK75;DIN 17222	DISTANZRING		

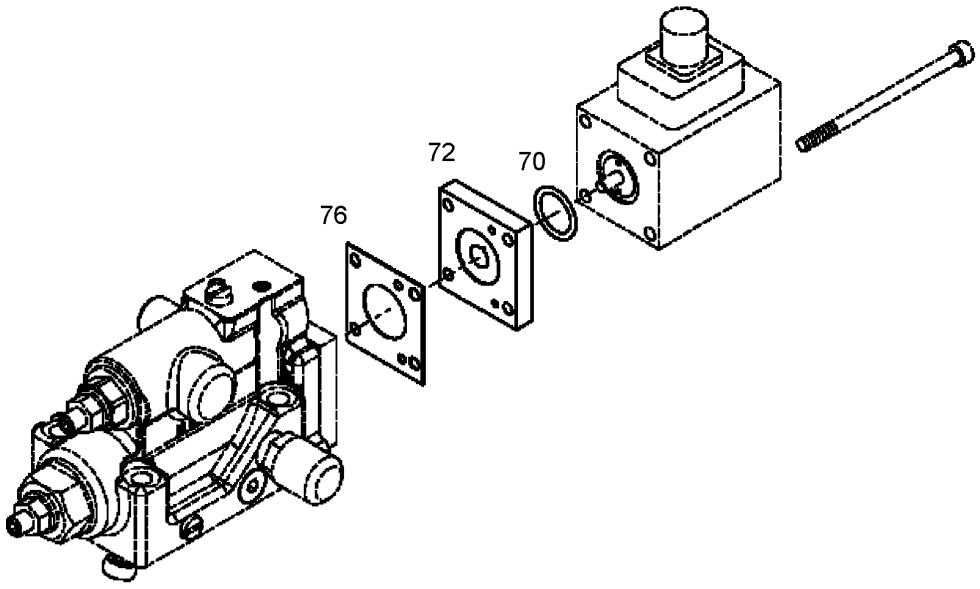

Pos.	Item	Quantity	Description	Bezeichnung	Serie	K
70	7380868	1	O-RING	O-RING		
72	9275429	1	COVER	DECKEL		
76	9275428	1	SEAL	DICHTUNG		

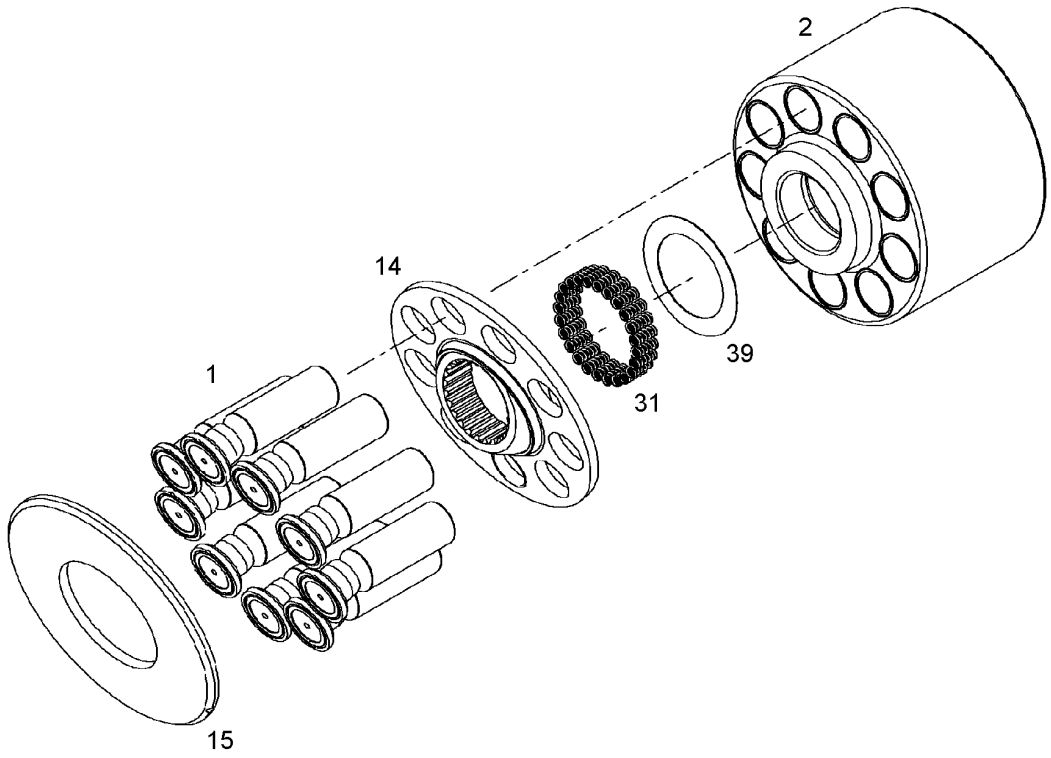

Pos.	Item	Quantity	Description	Bezeichnung	Serie	K
1	9889831	9	RK PISTON WITH GUIDE SHOE	RS KOLBEN MIT GLEITSCHUH		
2	9889833	1	RK CYLINDER+CONTROL PLATE ⇨ ❑ 131	RS ZYLINDER+STEUERPLATTE		
14	9889988	1	RK PULL-BACK BALL+PULL-B.PLATE ⇨ ❑ 132	RS RUECKZUGKUGEL+RUECKZ.		
15	9889809	1	SLIDING DISC 72X152X6	GLEITSCHEIBE		
31	7382167	24	PRESSURE SPRING	DRUCKFEDER		
39	9885924	1	WASHER SET	SCHEIBENSATZ		

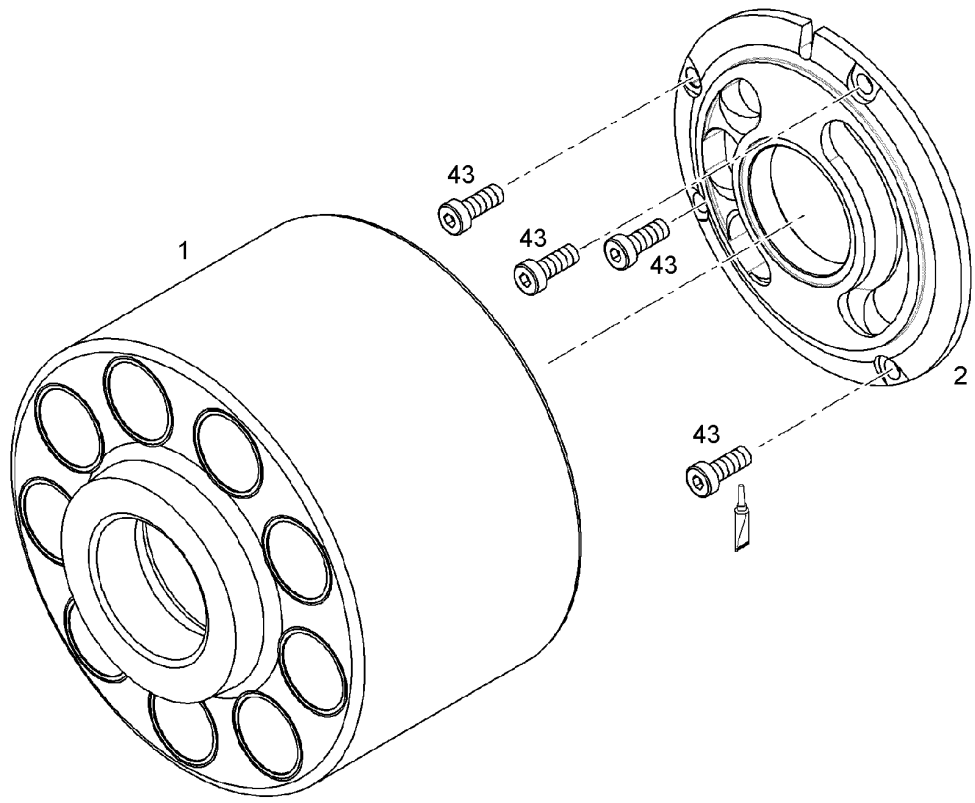

Pos.	Item	Quantity	Description	Bezeichnung	Serie	K
1	9075894	1	CYLINDER WITH BUSHING	ZYLINDER MIT BUCHSE		
2	9887035	1	CONTROL PLATE LEFT	STEUERPLATTE LINKS		
43	4981218	4	SOCKET HEAD SCREW ISO 14580 M6X16 10.9	ZYLINDERSCHRAUBE		

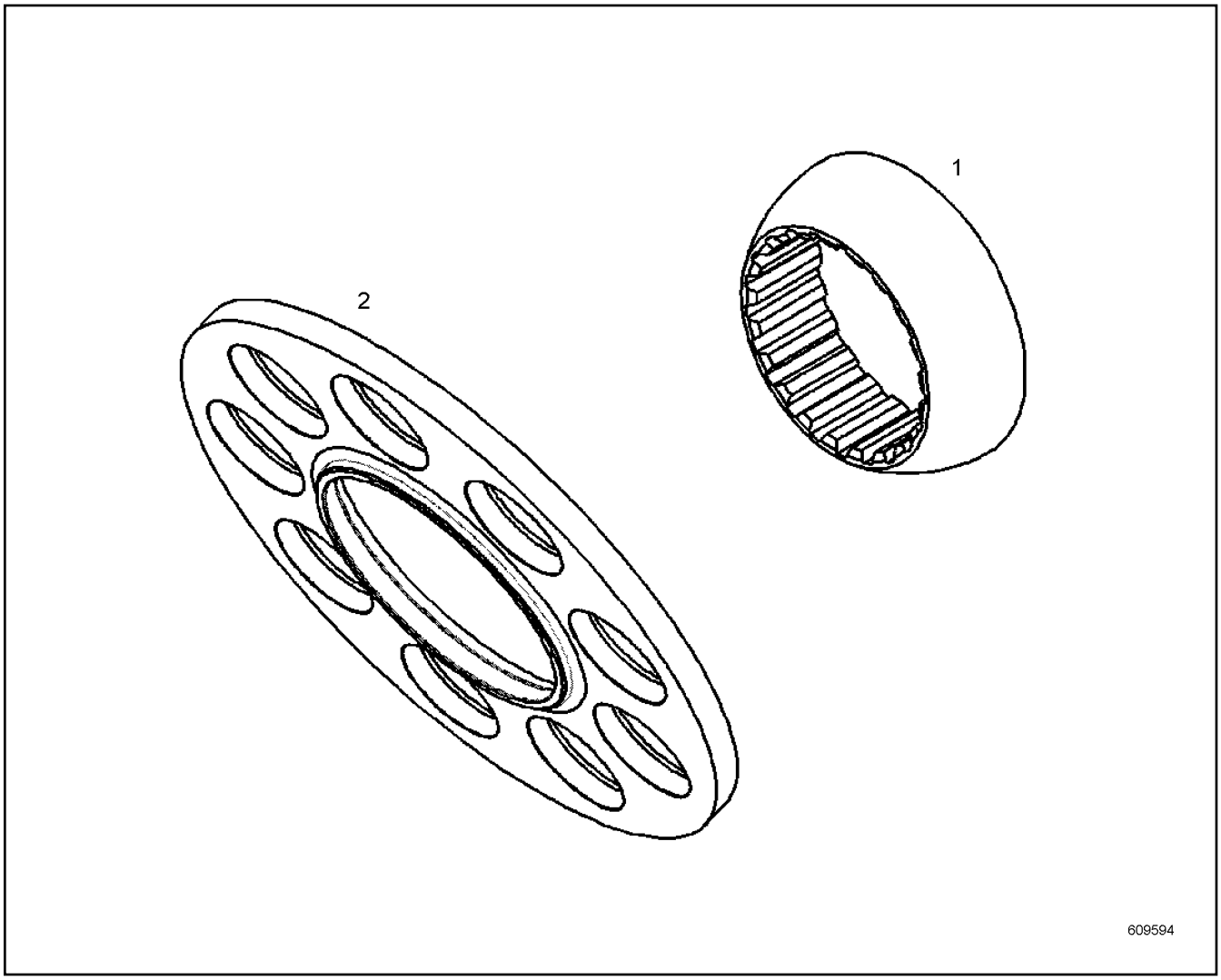

Pos.	Item	Quantity	Description	Bezeichnung	Serie	K
1	9889929	1	PULL-BACK BALL	RUECKZUGKUGEL		
2	9889930	1	PULL-BACK PLATE	RUECKZUGPLATTE		

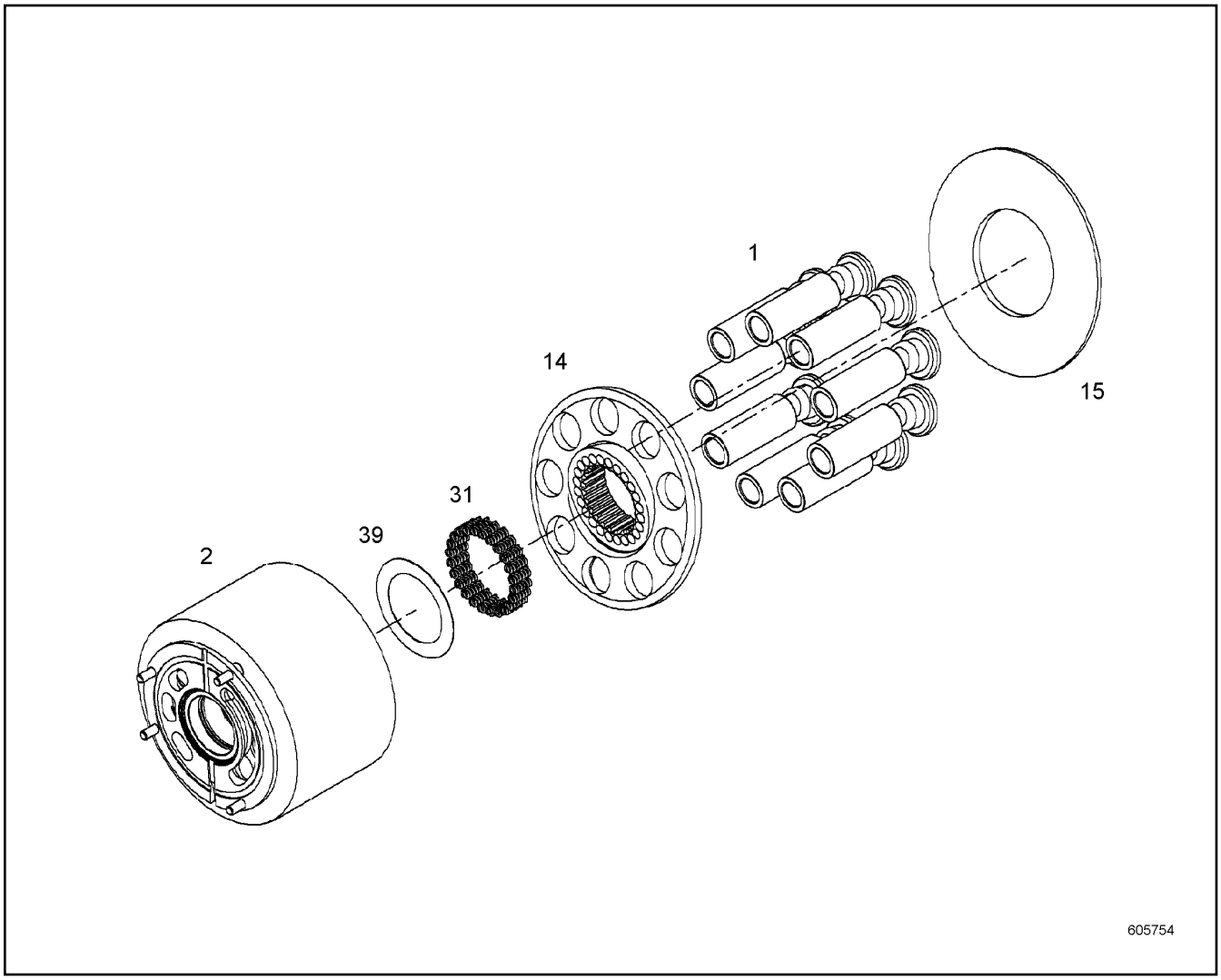

Pos.	Item	Quantity	Description	Bezeichnung	Serie	K
1	9889831	1	RK PISTON WITH GUIDE SHOE	RS KOLBEN MIT GLEITSCHUH		
2	9889832	1	RK CYLINDER+CONTROL PLATE ⇨ ❑ 134	RS ZYLINDER+STEUERPLATTE		
14	9889988	1	RK PULL-BACK BALL+PULL-B.PLATE ⇨ ❑ 132	RS RUECKZUGKUGEL+RUECKZ.		
15	9889809	1	SLIDING DISC 72X152X6	GLEITSCHEIBE		
31	7382167	24	PRESSURE SPRING	DRUCKFEDER		
39	9885924	1	WASHER SET	SCHEIBENSATZ		

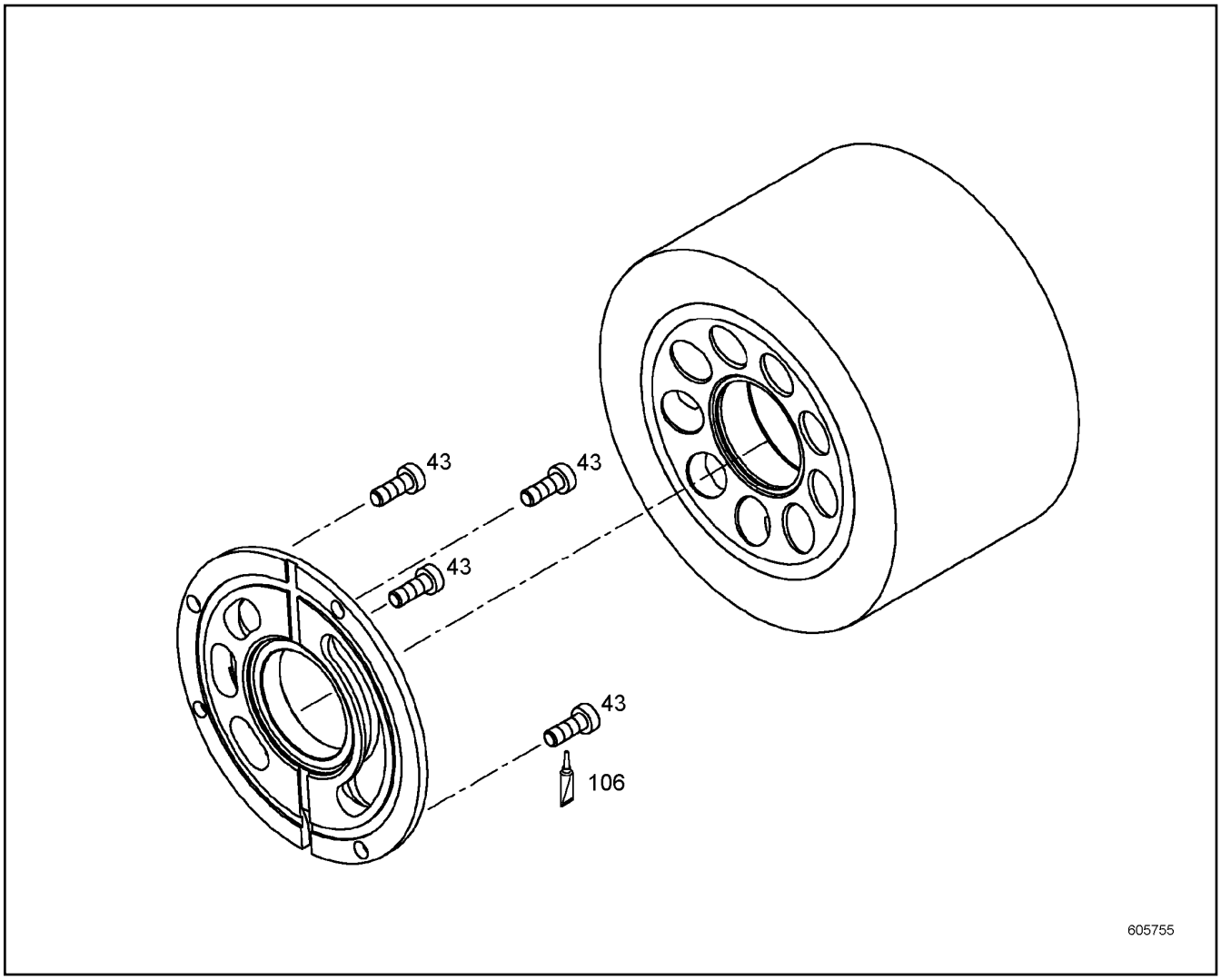

Pos.	Item	Quantity	Description	Bezeichnung	Serie	K
43	4981218	4	SOCKET HEAD SCREW ISO 14580 M6X16 10.9	ZYLINDERSCHRAUBE		
106	8700012	1	SCREW LOCKING	SCHRAUBENSICHERUNG		

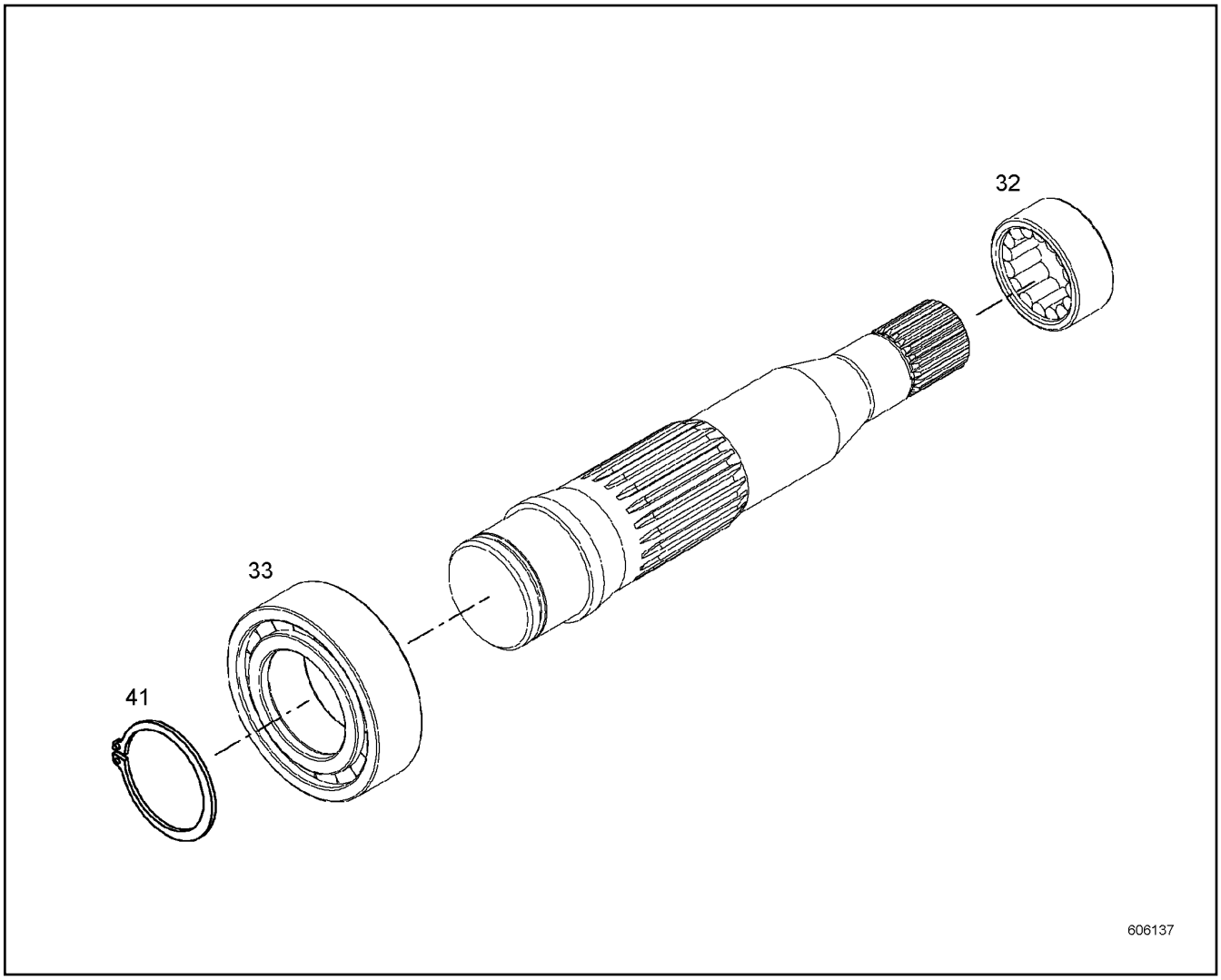

Pos.	Item	Quantity	Description	Bezeichnung	Serie	K
32	7469905	1	CYL.NEEDLE BEARING	ZYLINDERNADELLAGER		
33	7380106	1	CYLINDRICAL ROLLER BEARING	ZYLINDERROLLENLAGER		
41	4280034	1	LOCKING RING DIN 471 50X2	SICHERUNGSRING		

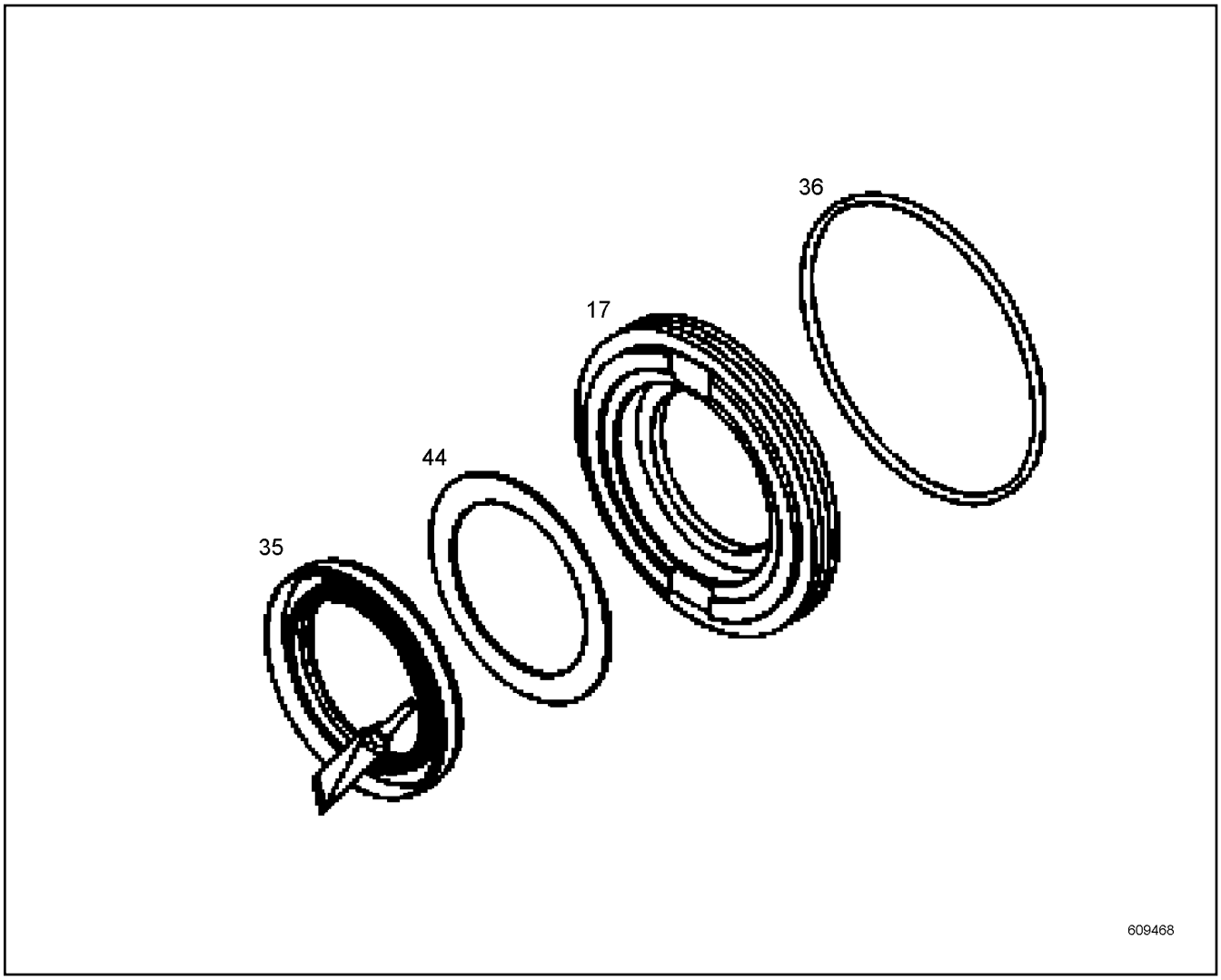

Pos.	Item	Quantity	Description	Bezeichnung	Serie	K
17	9885628	1	CLOSING RING	VERSCHLUSSRING		
35	10014510	1	ROTARY SHAFT LIP SEAL	RADIALWELLENDICHTRING		
36	7380657	1	O-RING	O-RING		
44	7380531	1	SHIM RING 55X65X1.5 ST	PASSSCHEIBE		

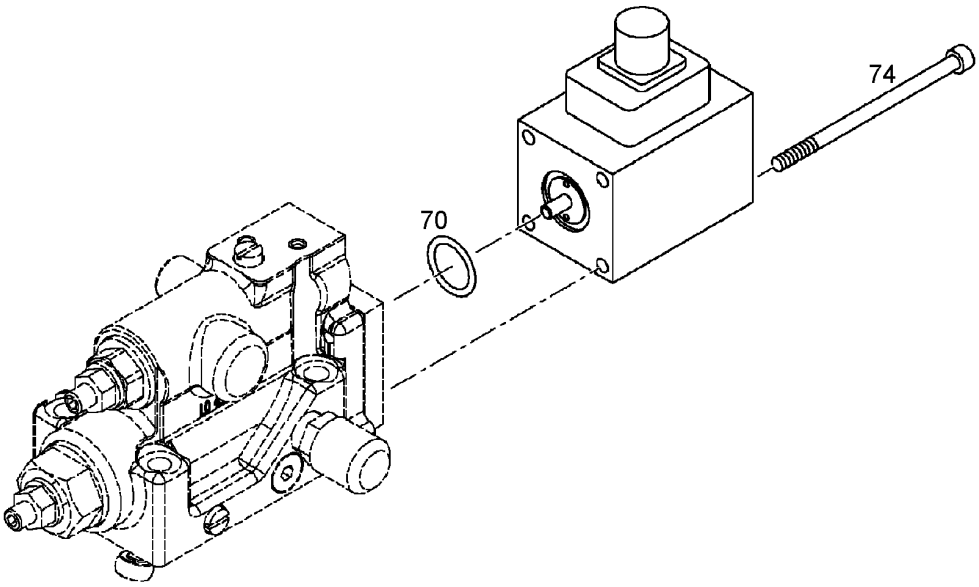

Pos.	Item	Quantity	Description	Bezeichnung	Serie	K
70	7381004	1	O-RING	O-RING		
74	10539462	4	SOCKET HEAD SCREW ISO 4762 M5X85 A4-7	ZYLINDERSCHRAUBE		

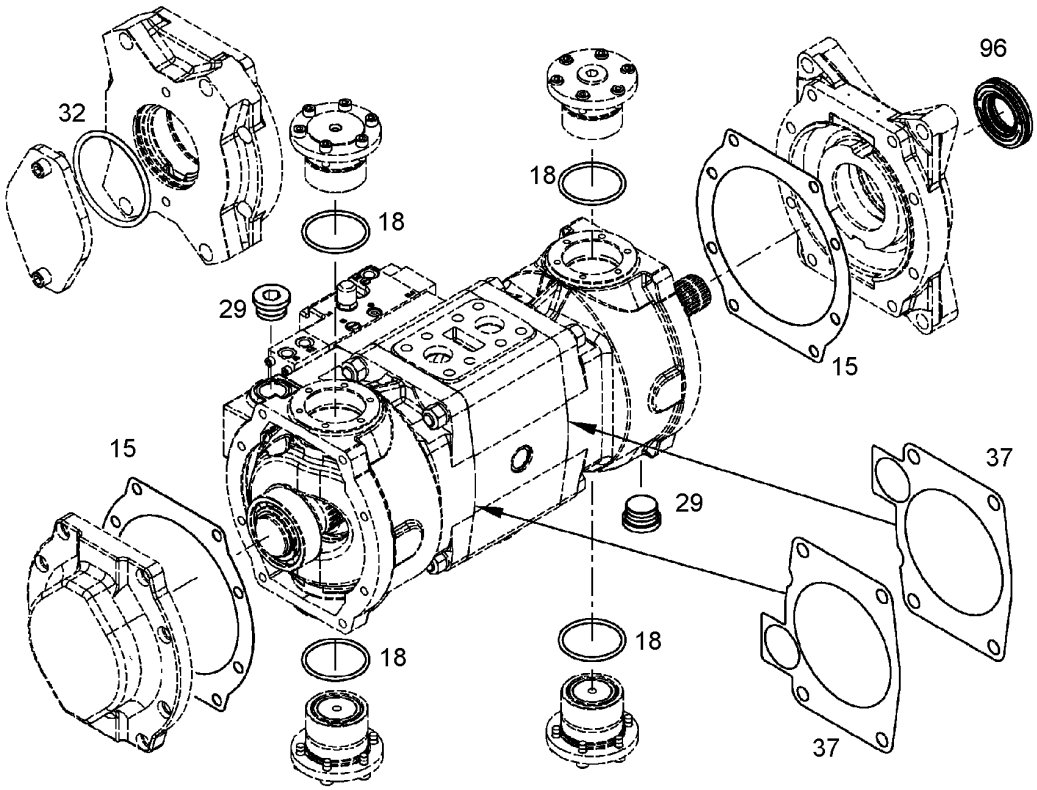

Pos.	Item	Quantity	Description	Bezeichnung	Serie	K
15	9882207	2	SEAL	DICHTUNG		
18	7380656	4	O-RING	O-RING		
29	10137121	2	SCREW PLUG	VERSCHLUSSSCHRAUBE		
32	7004512	1	O-RING	O-RING		
37	9276860	2	FLAT GASKET	FLACHDICHTUNG		
96	9268016	1	REPAIR KIT LOCK RING ⇨ ❑ 136	RS VERSCHLUSSRING		

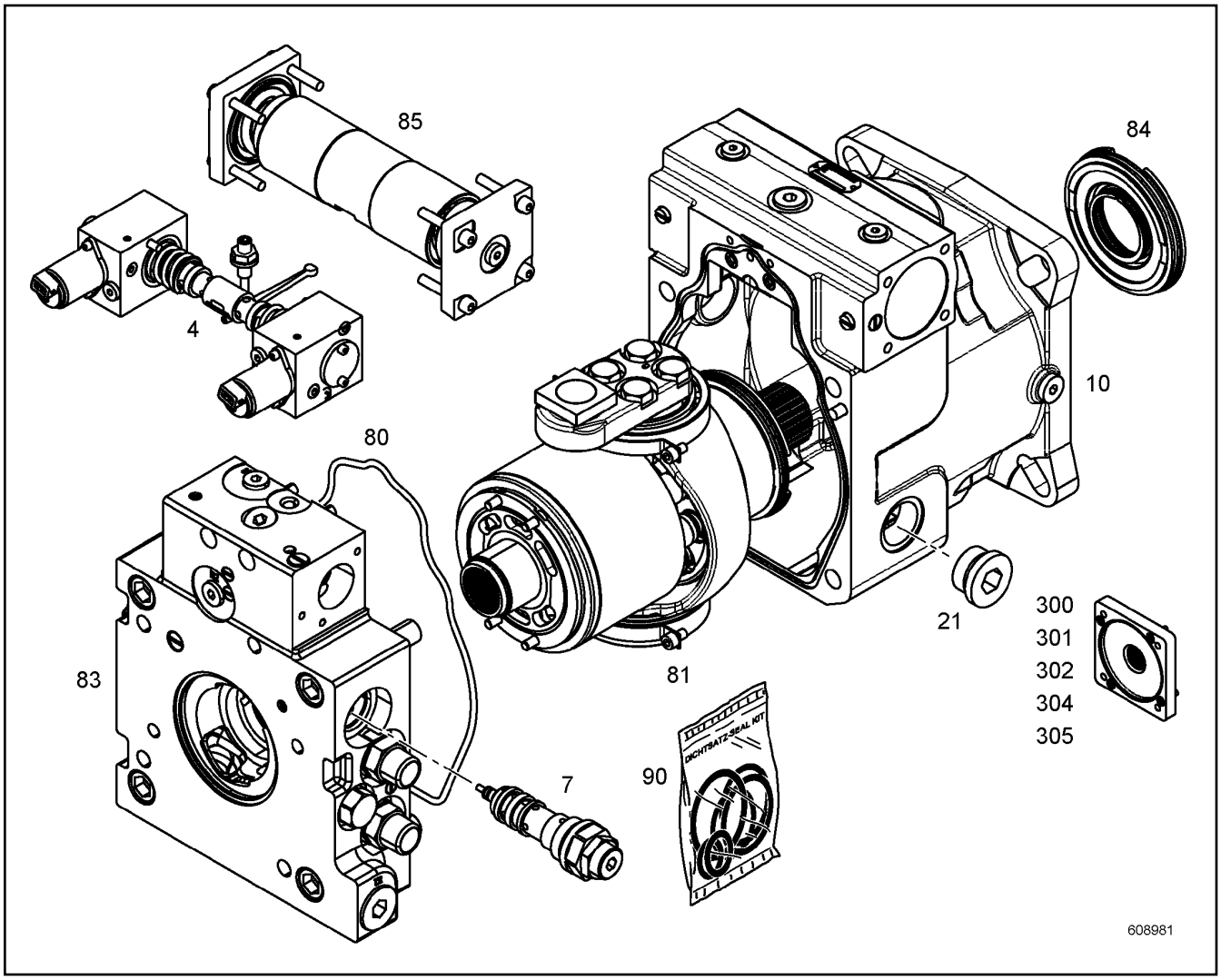

Pos.	Item	Quantity	Description	Bezeichnung	Serie	K
4	11362187	1	REGULATING VALVE ⇨ ❑ 141	REGELVENTIL		
7	10127478	1	REGULATING VALVE ⇨ ❑ 144	REGELVENTIL		
21	10137121	1	SCREW PLUG	VERSCHLUSSSCHRAUBE		
80	10122248	1	RK ADDITIONAL PARTS ⇨ ❑ 145	RS ZUSATZTEILE		
81	10138025	1	REPAIR KIT DRIVING MECHANISM ⇨ ❑ 146	RS TRIEBWERK		
83	10141317	1	REPAIR KIT CONNECTING PLATE ⇨ ❑ 152	RS ANSCHLUSSPLATTE		
84	10138032	1	REPAIR KIT LOCK RING ⇨ ❑ 156	RS VERSCHLUSSRING		
85	10122262	1	REGULATION REPAIR KIT ⇨ ❑ 157	RS VERSTELLUNG		
90	10138033	1	SEAL KIT CPL. ⇨ ❑ 158	DICHTSATZ KPL.		
300	10129874	1	THROUGH DRIVE ⇨ ❑ 161	DURCHTRIEB		
301	10130005	1	THROUGH DRIVE ⇨ ❑ 162	DURCHTRIEB		
302	10132357	1	CONSTRUCTION KIT OUTPUT ⇨ ❑ 163	ANBAUSATZ DURCHTRIEB		
304	10134521	1	THROUGH DRIVE ⇨ ❑ 164	DURCHTRIEB		

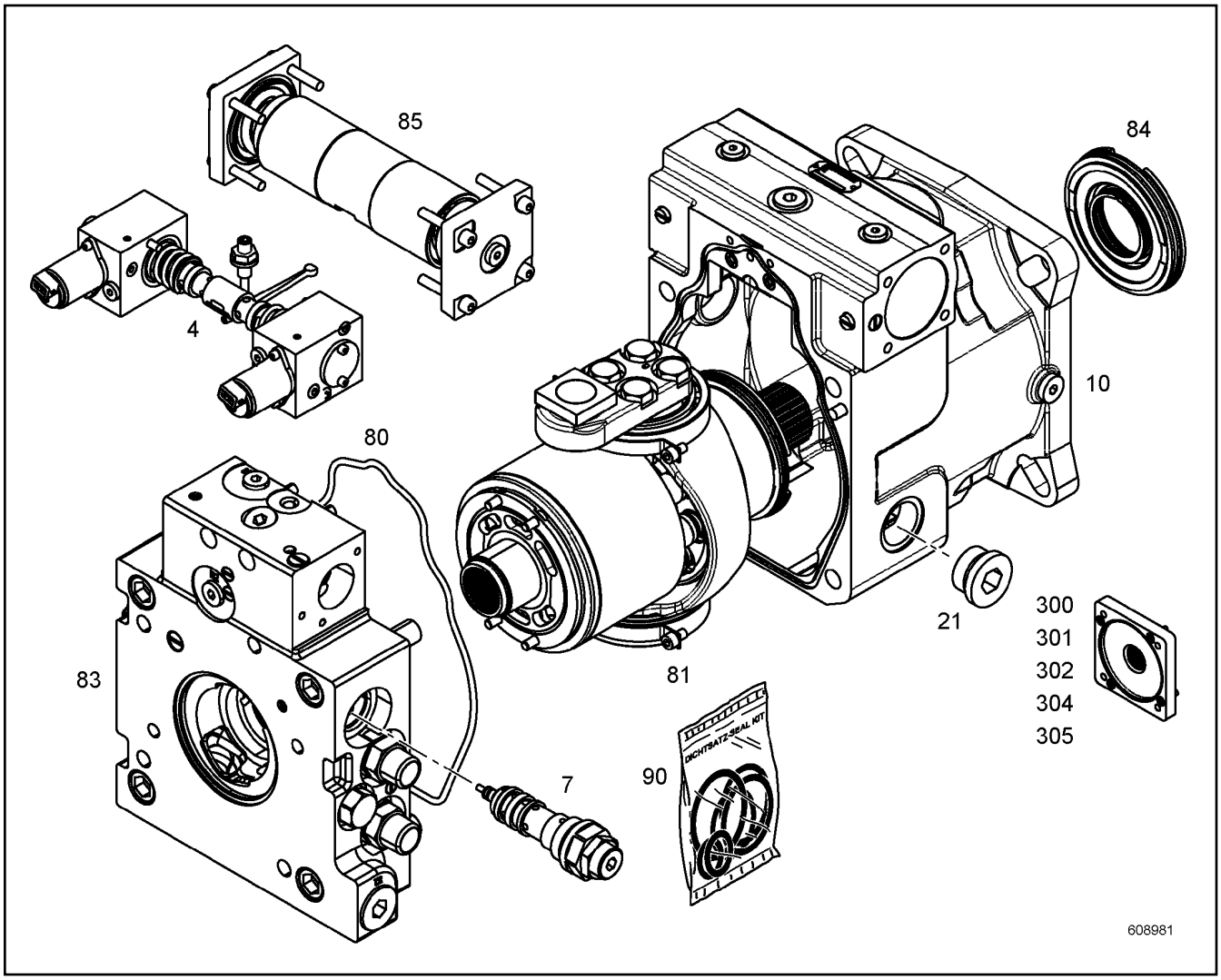

Pos.	Item	Quantity	Description	Bezeichnung	Serie	K
305	10138068	1	THROUGH DRIVE ⇨ ❑ 165	DURCHTRIEB		

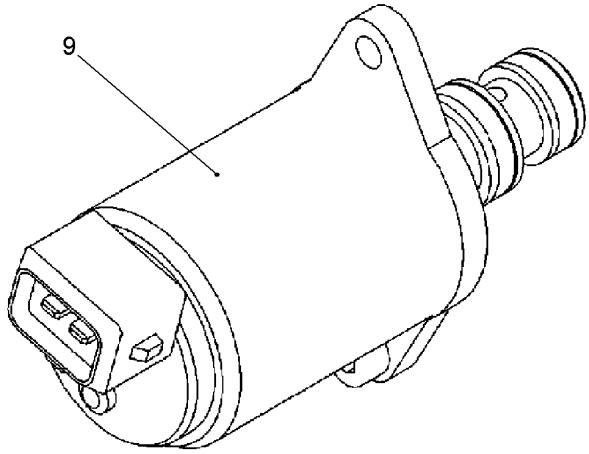

609098

Pos.	Item	Quantity	Description	Bezeichnung	Serie	K
9	10129420	2	PRESSURE REDUCTION VALVE ⇨ ❑ 142	DRUCKREDUZIERVENTIL		

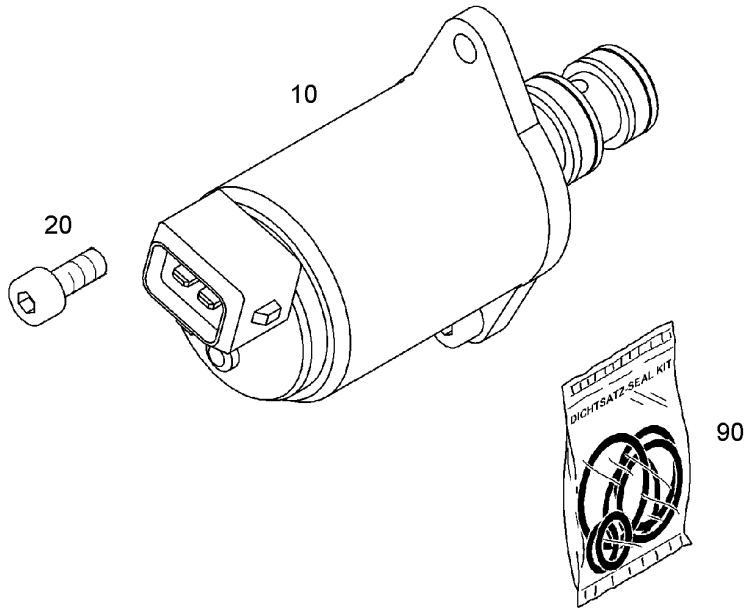

Pos.	Item	Quantity	Description	Bezeichnung	Serie	K
10	10135472	1	PRESSURE FEEDER VALVE	DRUCKEINSPEISEVENTIL		
20	10228541	2	SOCKET HEAD SCREW ISO 4762 M4X10 10.9	ZYLINDERSCHRAUBE		
90	10123214	1	SEAL KIT PRESSUR.CONTROL VALVE ⇨ ❑ 143	DS DRUCKREDUZIERVENTIL		

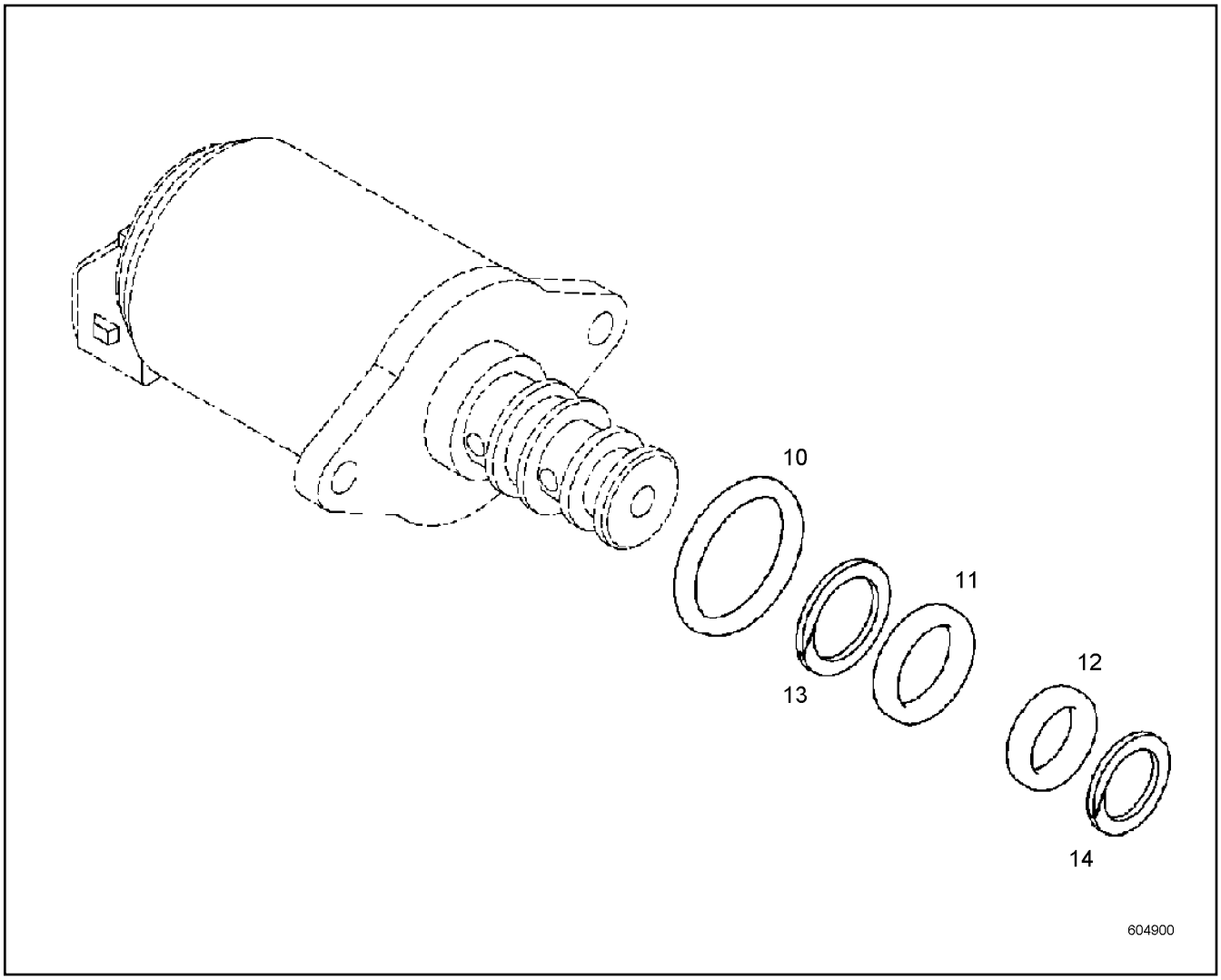

Pos.	Item	Quantity	Description	Bezeichnung	Serie	K
10	7381440	1	O-RING	O-RING		
11	7381439	1	O-RING	O-RING		
12	7381438	1	O-RING	O-RING		
13	11007751	1	BACK-UP RING CUT	STUETZRING GESCHL.		
14	11007749	1	BACK-UP RING CUT	STUETZRING GESCHL.		

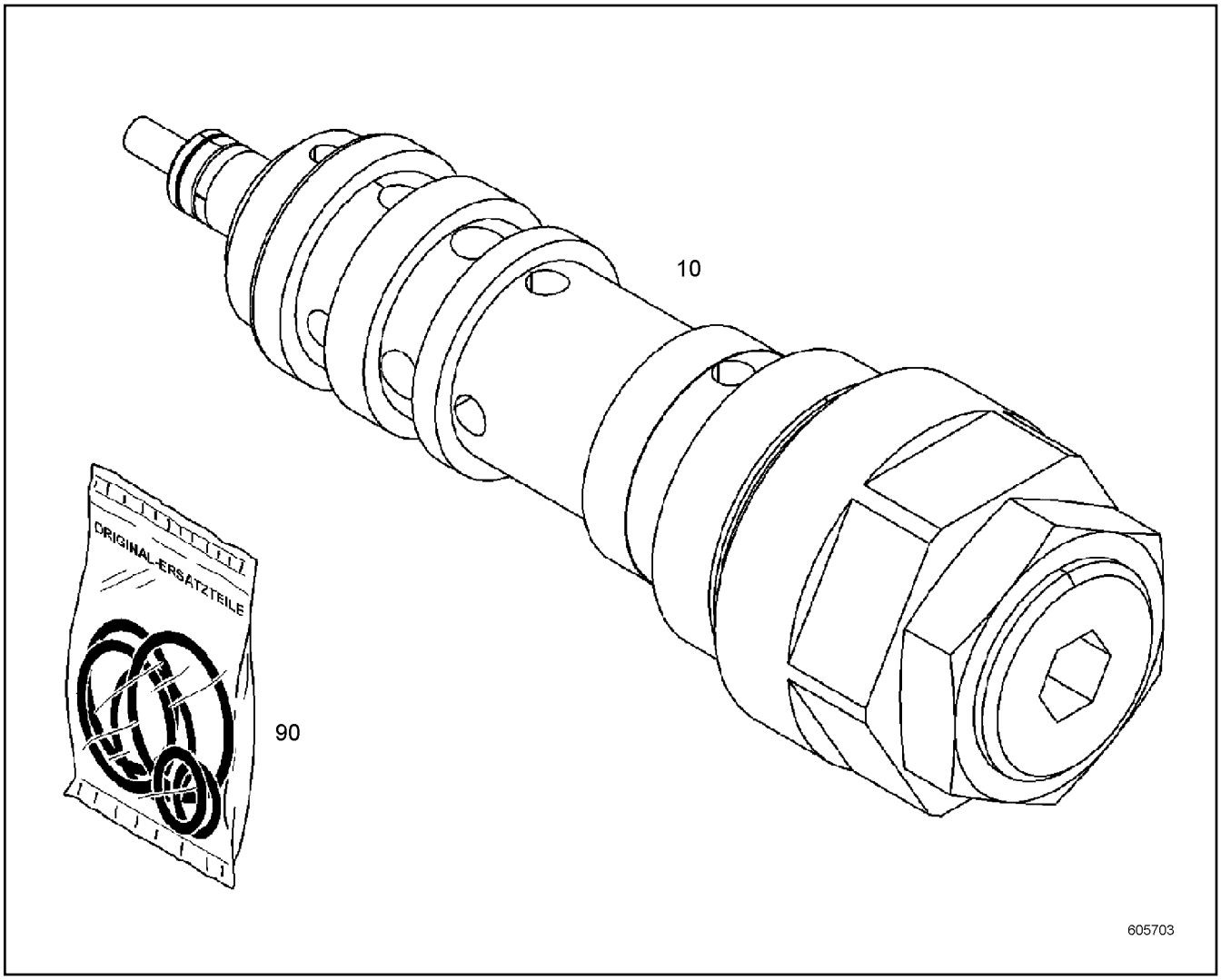

Pos.	Item	Quantity	Description	Bezeichnung	Serie	K
10	10127479	1	REGULATING VALVE	REGELVENTIL		

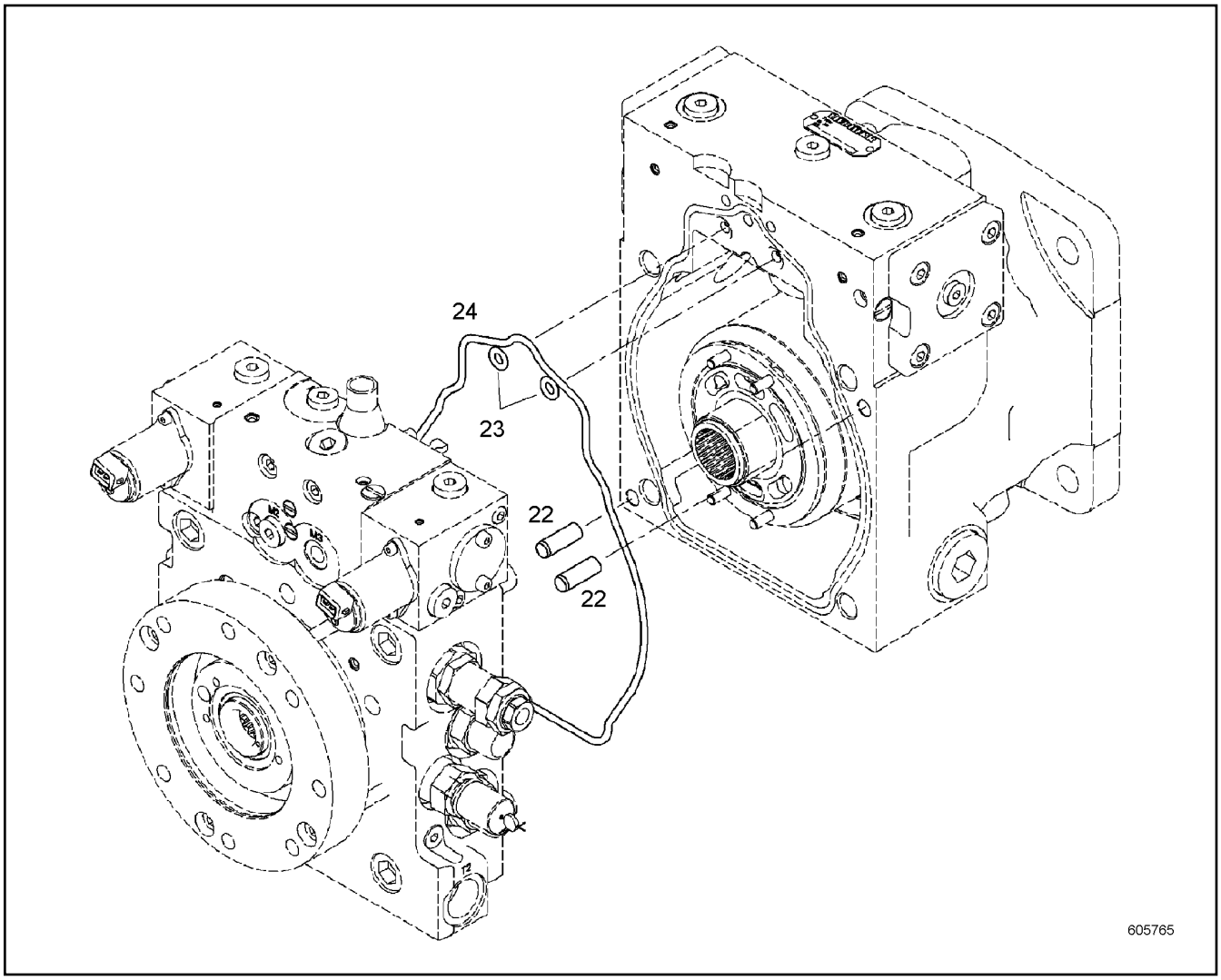

Pos.	Item	Quantity	Description	Bezeichnung	Serie	K
22	4981077	2	PARALLEL PIN ISO 8734 10M6X30 ST	ZYLINDERSTIFT		
23	7381013	2	O-RING	O-RING		
24	10002309	1	O-RING	O-RING		

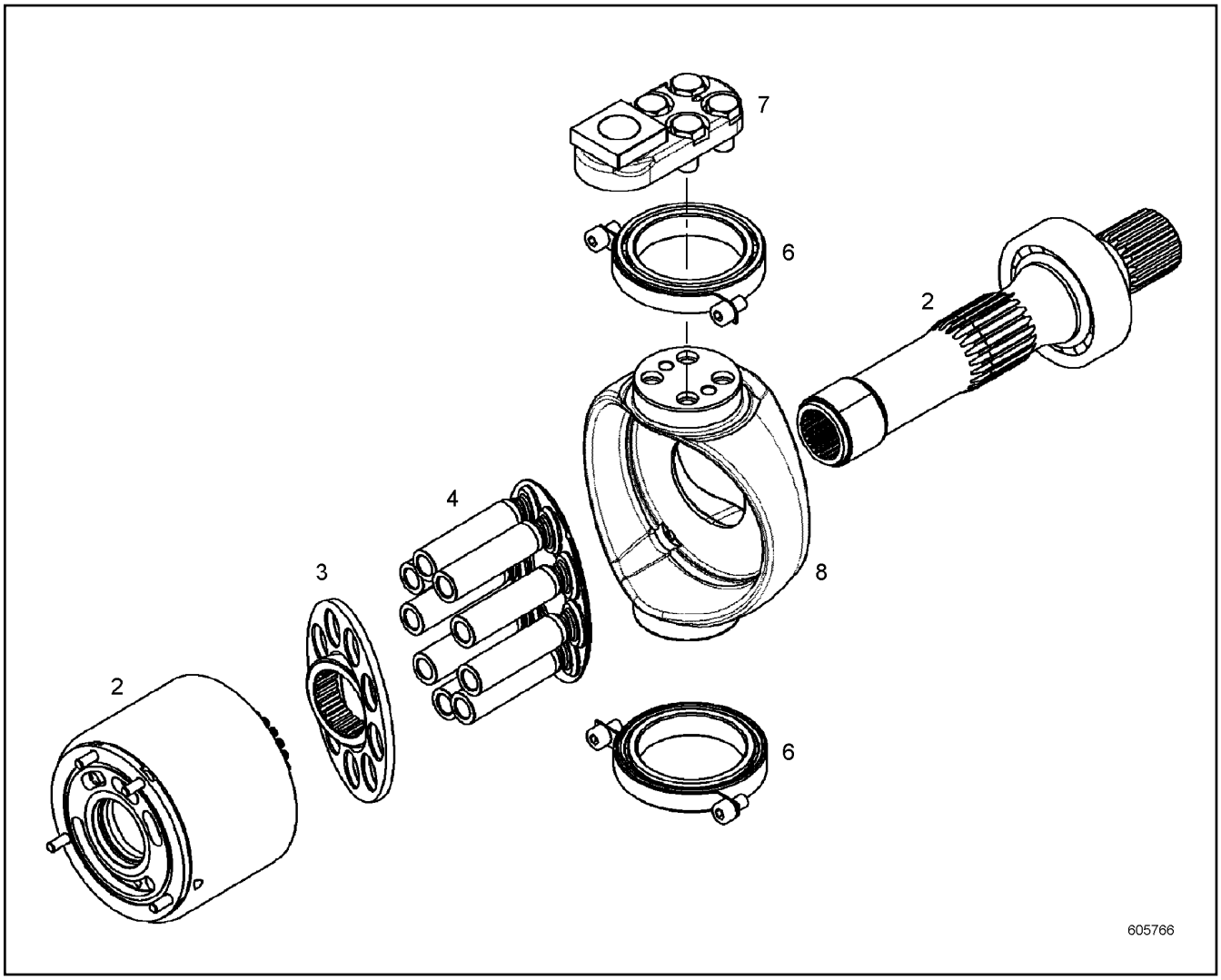

Pos.	Item	Quantity	Description	Bezeichnung	Serie	K
2	10138026	1	RK CYL.+CONTROL PLATE+SHAFT ⇨ ❑ 147	RS ZYL.+STEUERPL.+WELLE		
3	9078214	1	RK PULL-BACK BALL+PULL-B.PLATE	RS RUECKZUGKUGEL+RUECKZ.		
4	10122692	1	RK PISTON WITH GUIDE SHOE	RS KOLBEN MIT GLEITSCHUH		
6	10143607	1	REPAIR SET SWIVEL BEARING ⇨ ❑ 150	RS SCHWENKLAGER		
7	10122245	1	REPAIR KIT LEVER ⇨ ❑ 151	RS HEBEL		
8	10122246	1	REPAIR SET SWIVEL YOKE	RS SCHWENKJOCH		

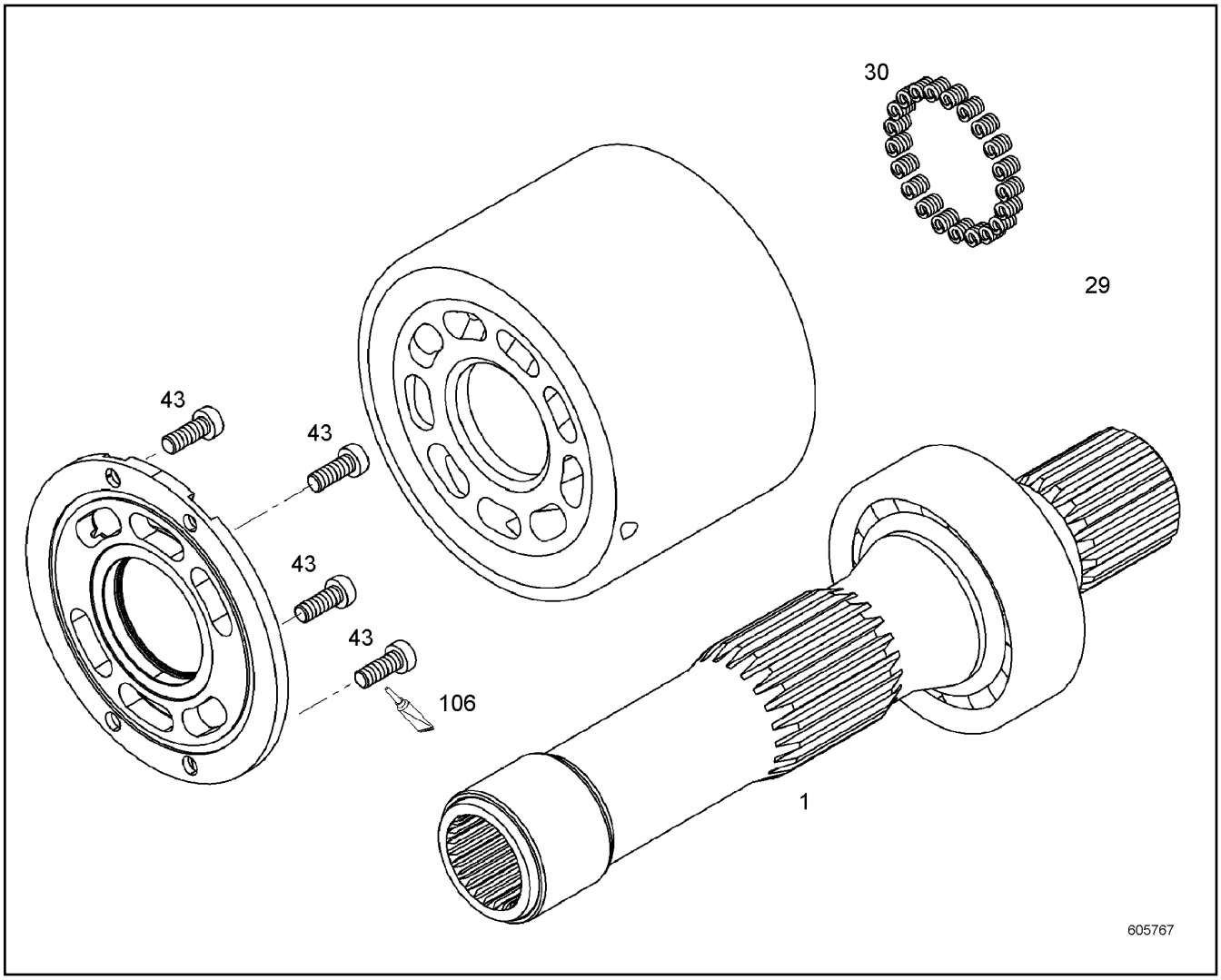

Pos.	Item	Quantity	Description	Bezeichnung	Serie	K
1	10138027	1	REPAIR KIT SHAFT ⇨ ❑ 148	RS WELLE		
29	9885937	1	WASHER SET ⇨ ❑ 149	SCHEIBENSATZ		
30	7381699	21	PRESSURE SPRING	DRUCKFEDER		
43	10137839	4	TALLOW-DROP SCREW M6X16 10.9	LINSENKOPFSCHRAUBE		
106	7016208	1	OMNIFIT	OMNIFIT		

OHNE BILD
WITHOUT ILLUSTRATION
SANS PLANCHE
SIN FIG.
SEM ILUSTRAÇÃO
БЕЗ ИЗОБРАЖЕНИЯ

600000

Pos.	Item	Quantity	Description	Bezeichnung	Serie	K
33	7380070	1	CYLINDRICAL ROLLER BEARING	ZYLINDERROLLENLAGER		
39	7380297	1	O-RING	O-RING		
40	4281017	1	LOCKING RING DIN 472 95X3	SICHERUNGSRING		
41	4280032	2	LOCKING RING DIN 471 45X1.75	SICHERUNGSRING		

OHNE BILD
WITHOUT ILLUSTRATION
SANS PLANCHE
SIN FIG.
SEM ILUSTRAÇÃO
БЕЗ ИЗОБРАЖЕНИЯ

600000

Pos.	Item	Quantity	Description	Bezeichnung	Serie	K
10	10123256	2	SUPPORTING WASHER 45X56X0.3	STUETZSCHEIBE		
11	10123257	2	SUPPORTING WASHER 45X56X0.4	STUETZSCHEIBE		
12	10123258	2	SUPPORTING WASHER 45X56X0.5	STUETZSCHEIBE		

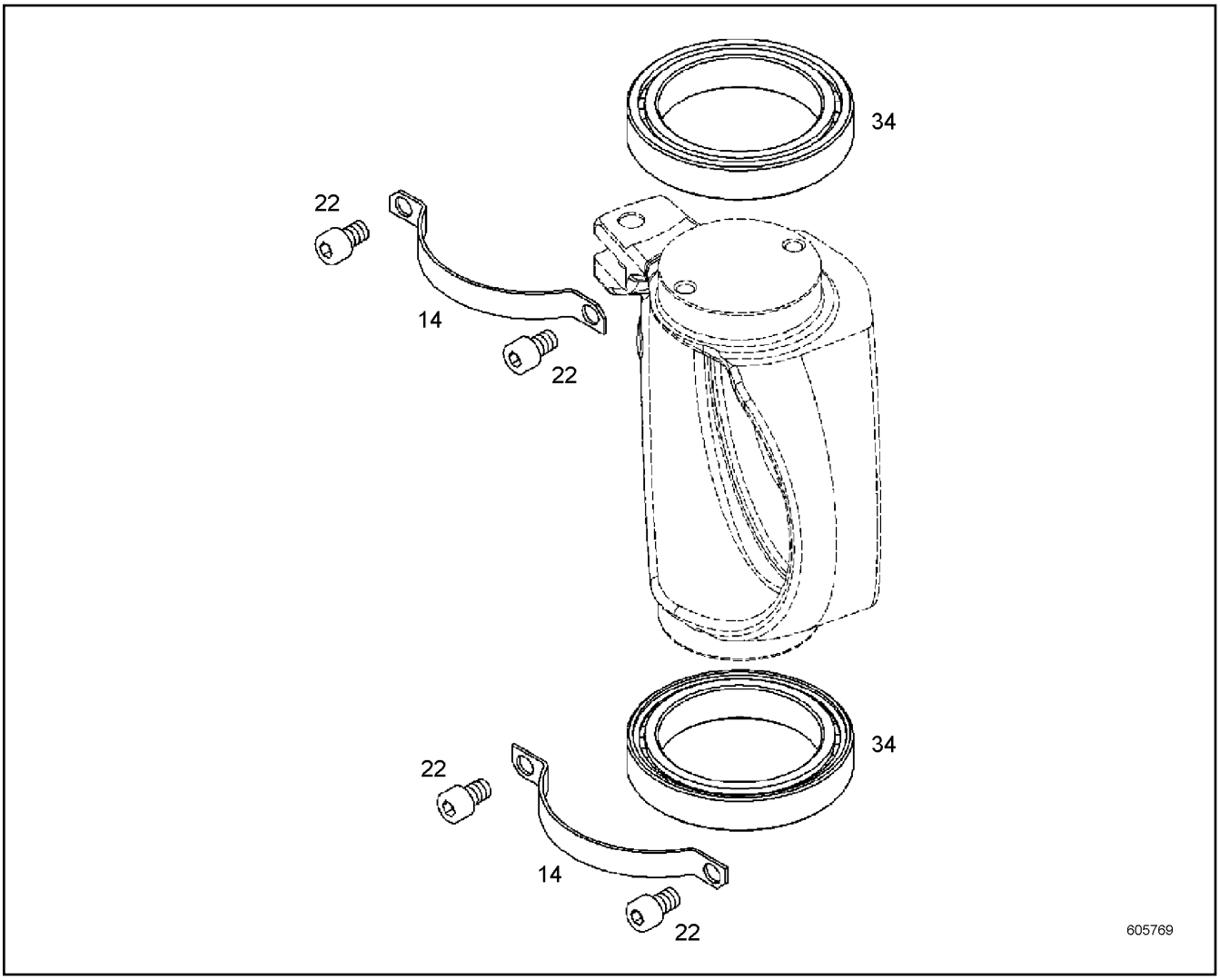

Pos.	Item	Quantity	Description	Bezeichnung	Serie	K
14	9887948	2	BEARING HOLDER	LAGERHALTER		
22	10219869	4	SOCKET HEAD SCREW ISO 4762 M8X12 8.8	ZYLINDERSCHRAUBE		
34	11490216	2	CYL ROLLER BEARING	ZYL ROLLENLAGER		

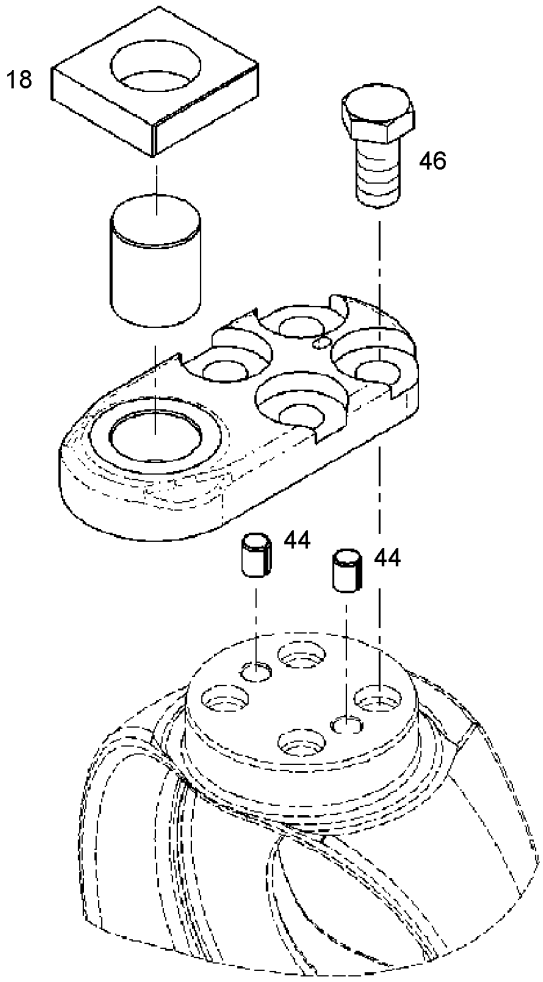

Pos.	Item	Quantity	Description	Bezeichnung	Serie	K
18	9076196	1	GROOVING BLOCK	NUTENSTEIN		
44	4980638	2	DOWEL PIN ISO 13337 8X10 ST	SPANNSTIFT		
46	4980977	4	HEX SCREW ISO 4017 M12X25 10.9	SECHSKANTSCHRAUBE		

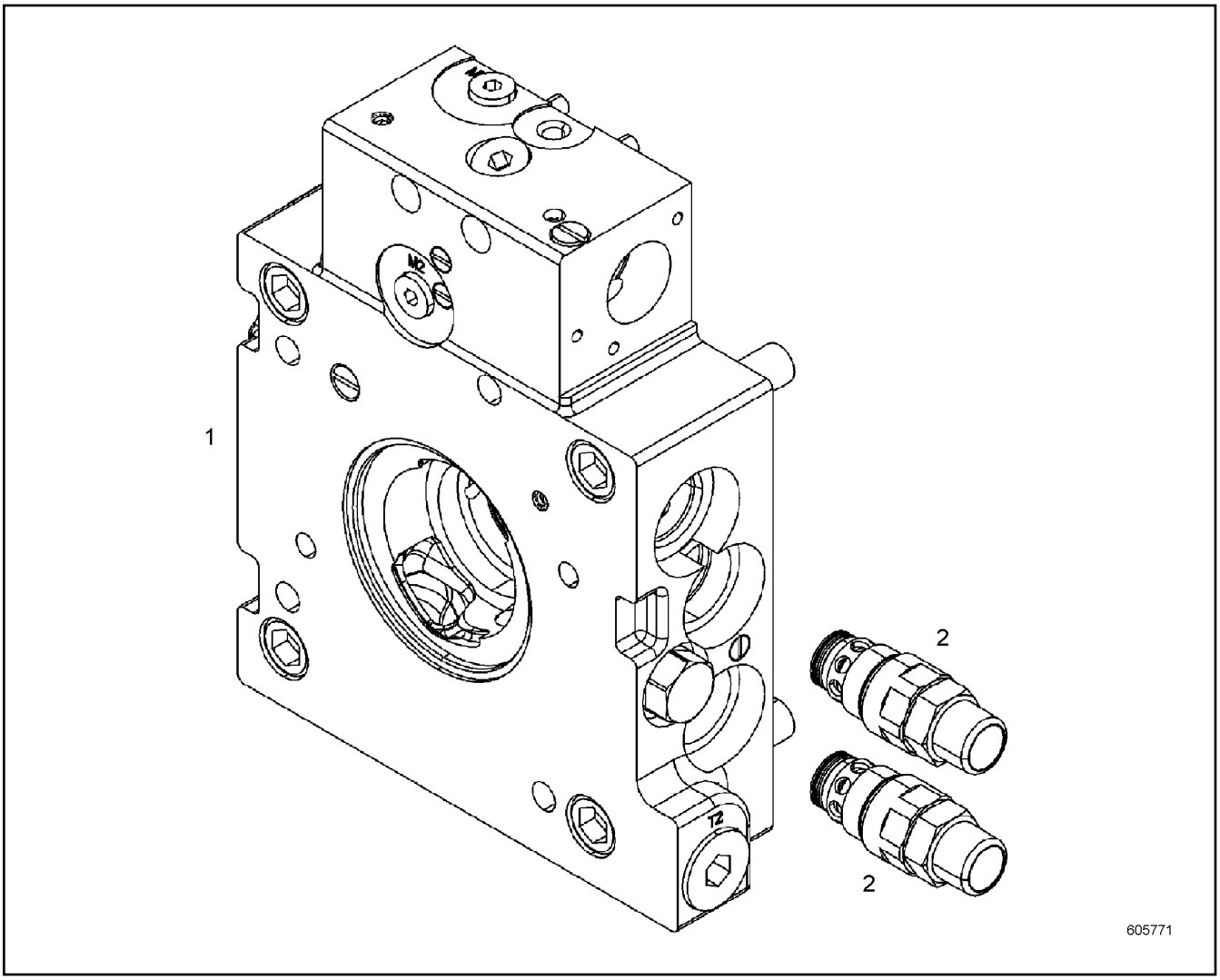

Pos.	Item	Quantity	Description	Bezeichnung	Serie	K
1	10141316	1	TERMINAL BOARD PRE-ASS. ⇨ ❑ 153	ANSCHLUSSPLATTE VORM.		
2	10123236	2	PRESSURE FEEDER VALVE ⇨ ❑ 155	DRUCKEINSPEISEVENTIL		

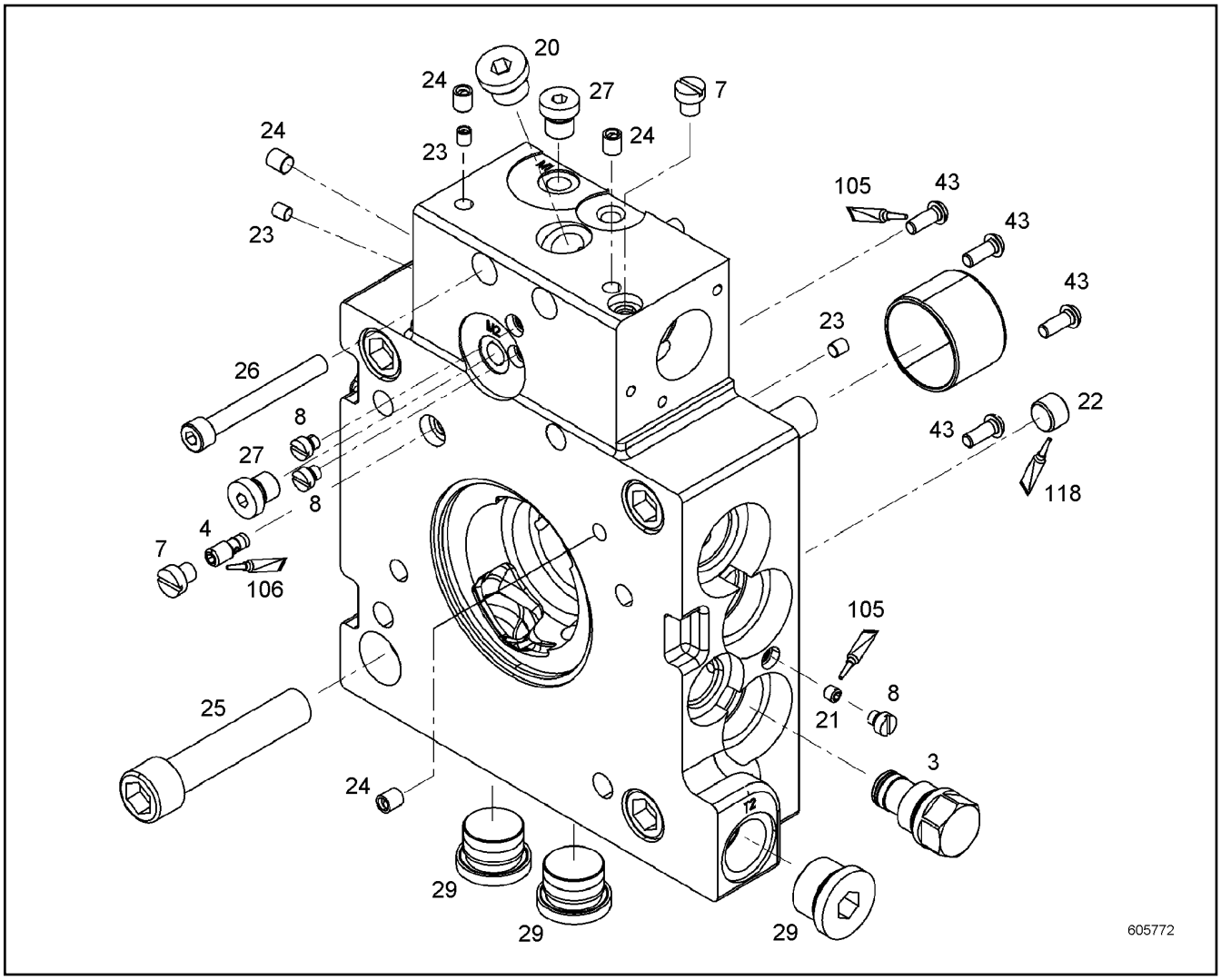

Pos.	Item	Quantity	Description	Bezeichnung	Serie	K
3	10123528	1	STOP PLUG ⇨ ❑ 154	STOPFEN		
4	10124239	1	SHUTTLE VALVE	WECHSELVENTIL		
7	9881609	2	SCREW PLUG M8X1	VERSCHLUSSSCHRAUBE		
8	9268441	5	SCREW PLUG M6	VERSCHLUSSSCHRAUBE		
20	10137312	1	SCREW PLUG	VERSCHLUSSSCHRAUBE		
21	4980082	1	GRUB SCREW DIN 913 M6X6 45H	GEWINDESTIFT		
22	403900501	1	SCREW PLUG DIN 906 ST	VERSCHLUSSSCHRAUBE		
23	7380490	2	SEALING PLUG	DICHTSTOPFEN		
24	7008121	4	SEALING PLUG	DICHTSTOPFEN		
25	10017870	4	SOCKET HEAD SCREW ISO 4762 M16X80 10.9	ZYLINDERSCHRAUBE		
26	11170484	2	SOCKET HEAD SCREW ISO 4762 M8X70 10.9	ZYLINDERSCHRAUBE		
27	10137115	2	SCREW PLUG	VERSCHLUSSSCHRAUBE		
29	10137108	3	SCREW PLUG	VERSCHLUSSSCHRAUBE		
43	10137839	4	TALLOW-DROP SCREW M6X16 10.9	LINSENKOPFSCHRAUBE		
105	8655016	1	SCREW LOCKING	SCHRAUBENSICHERUNG		
106	7016208	1	OMNIFIT	OMNIFIT		
118	811208201	1	GLUE	KLEBSTOFF		

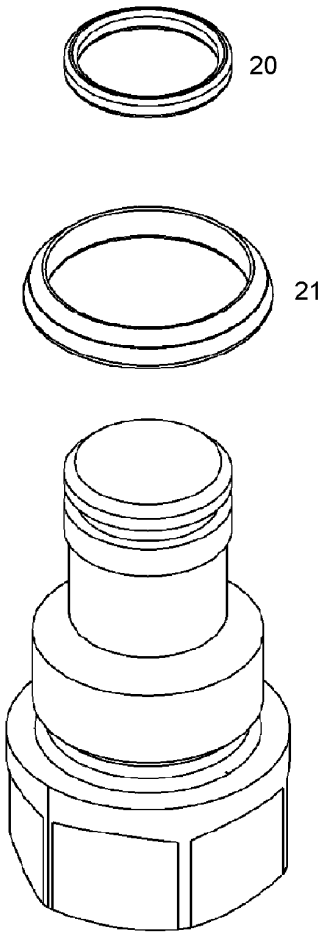

Pos.	Item	Quantity	Description	Bezeichnung	Serie	K
20	7381128	1	O-RING	O-RING		
21	7381127	1	O-RING	O-RING		

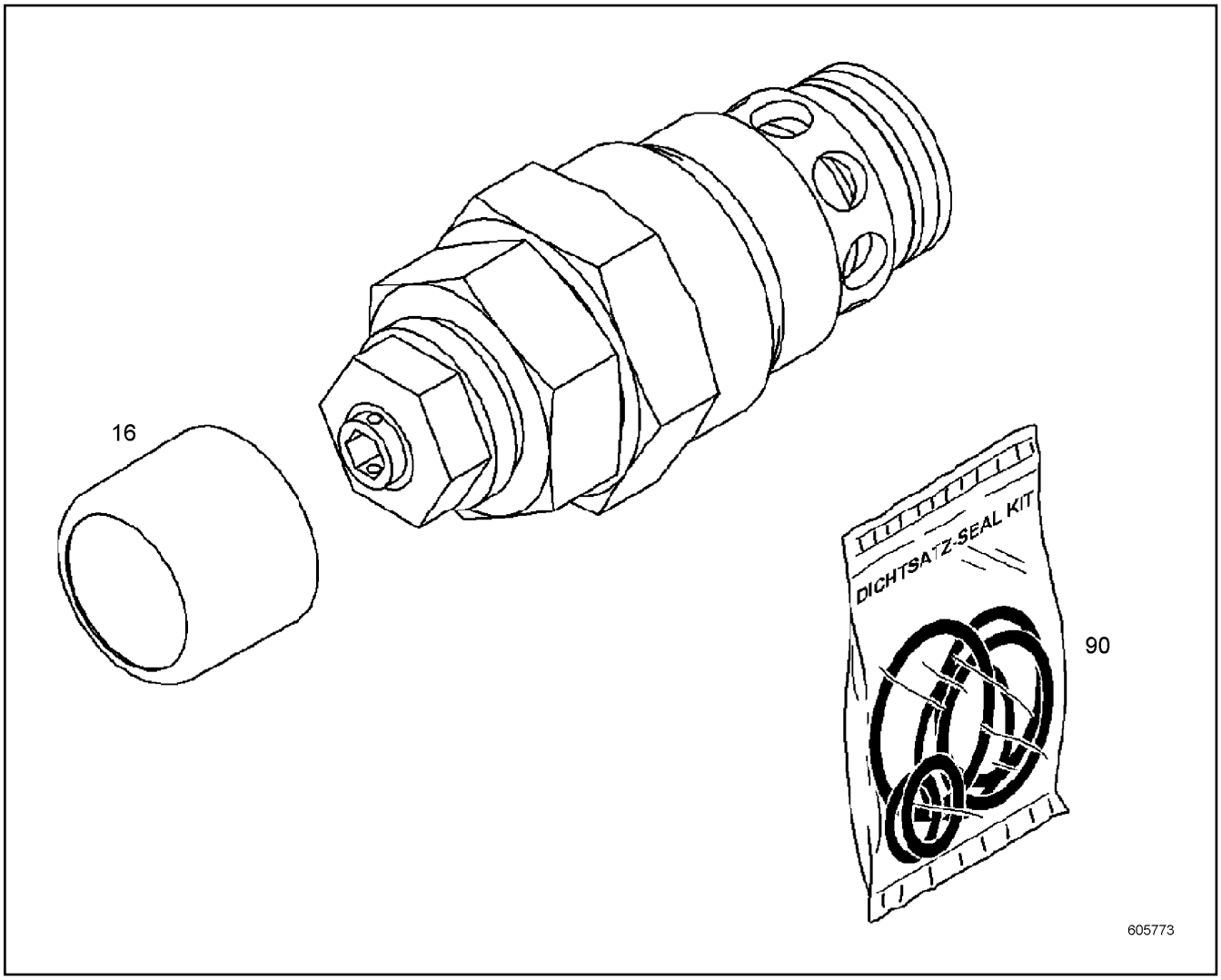

Pos.	Item	Quantity	Description	Bezeichnung	Serie	K
16	10801869	1	PROTECTING CAP	SCHUTZKAPPE		
90	10332095	1	SEAL KIT PRESSURE VALVE	DS DRUCKVENTIL		

OHNE BILD
WITHOUT ILLUSTRATION
SANS PLANCHE
SIN FIG.
SEM ILUSTRAÇÃO
БЕЗ ИЗОБРАЖЕНИЯ

600000

Pos.	Item	Quantity	Description	Bezeichnung	Serie	K
39	7380297	1	O-RING	O-RING		
40	4281017	1	LOCKING RING DIN 472 95X3	SICHERUNGSRING		
44	4002229	1	SHIM RING DIN 988 50X62X1.5	PASSSCHEIBE		

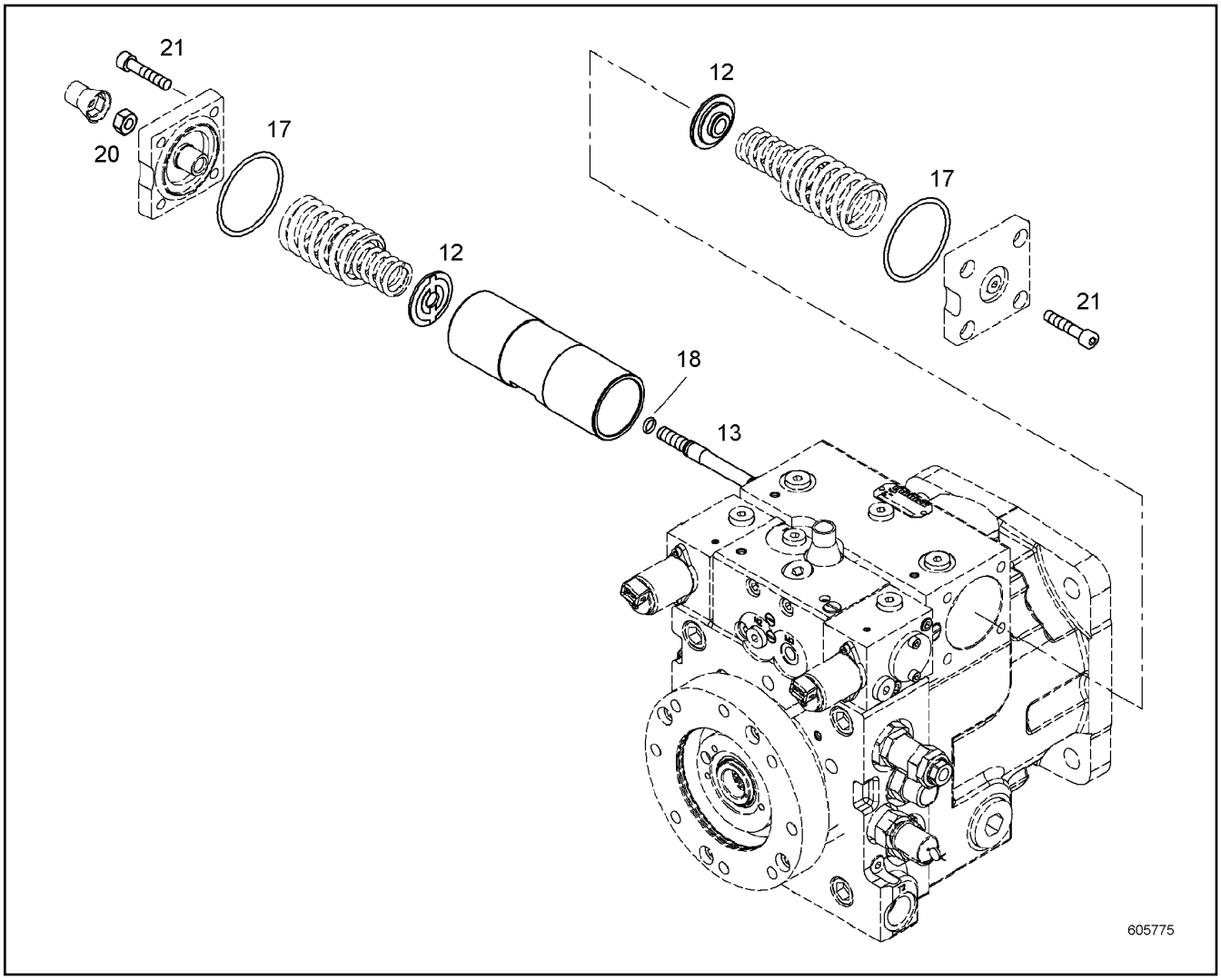

Pos.	Item	Quantity	Description	Bezeichnung	Serie	K
12	9076178	2	SPRING SUPPORT	FEDERTELLER		
13	9076176	1	CHECK SCREW M10X101 31CRMOV9;DIN EN	STELLSCHRAUBE		
17	10016874	2	O-RING	O-RING		
18	7380574	1	O-RING	O-RING		
20	4980986	1	HEX NUT ISO 8673 8	SECHSKANTMUTTER		
21	4980920	8	SOCKET HEAD SCREW ISO 4762 M8X40 10.9	ZYLINDERSCHRAUBE		

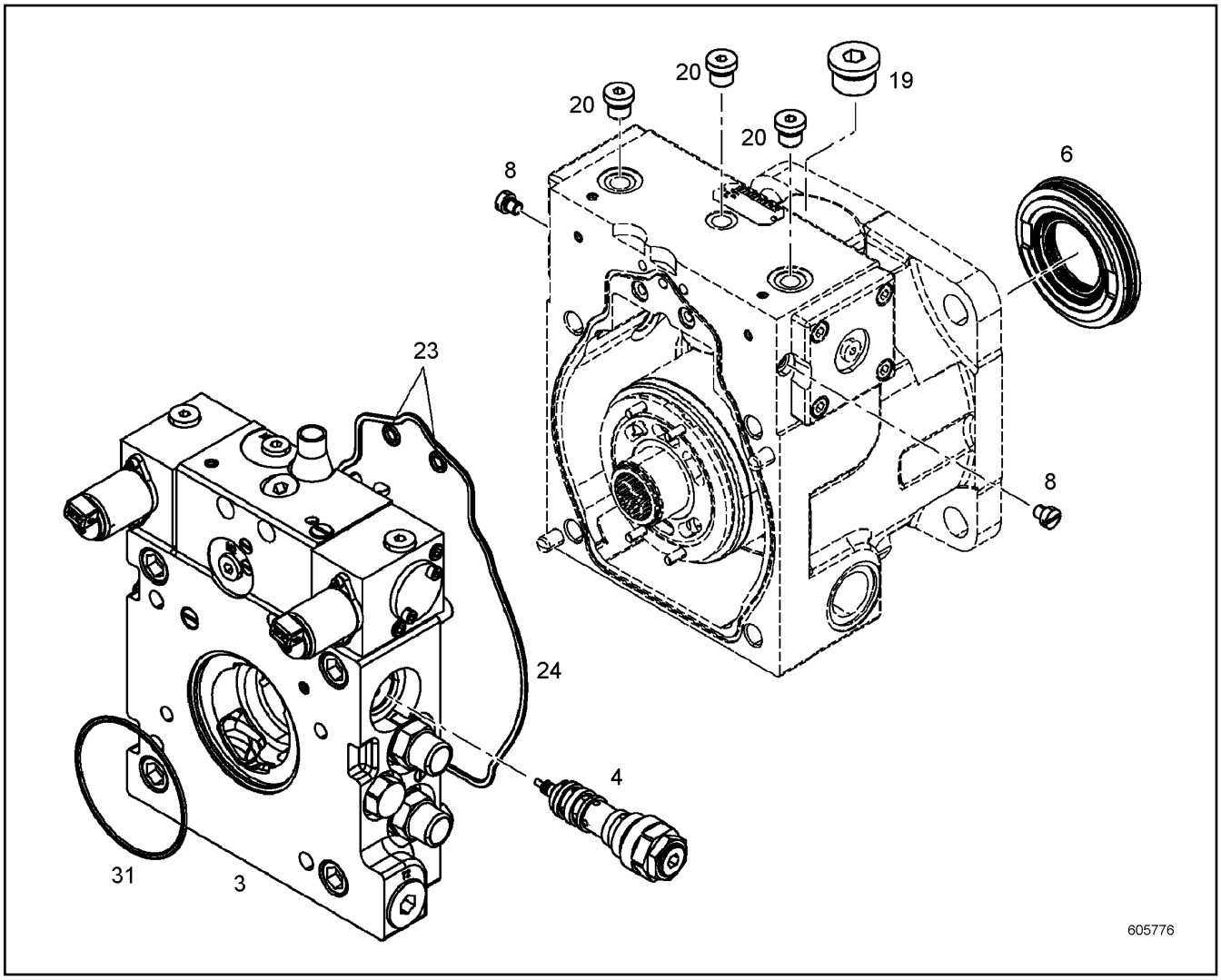

Pos.	Item	Quantity	Description	Bezeichnung	Serie	K
3	10138034	1	GASKET KIT INT.FLANGE ⇨ ❑ 159	DS ANSCHLUSSPLATTE		
4	10122265	1	SEAL KIT REGULATING VALVE ⇨ ❑ 160	DS REGELVENTIL		
6	10138032	1	REPAIR KIT LOCK RING ⇨ ❑ 156	RS VERSCHLUSSRING		
8	9881609	2	SCREW PLUG M8X1	VERSCHLUSSSCHRAUBE		
19	10137108	1	SCREW PLUG	VERSCHLUSSSCHRAUBE		
20	10137113	3	SCREW PLUG	VERSCHLUSSSCHRAUBE		
23	7381013	2	O-RING	O-RING		
24	10002309	1	O-RING	O-RING		
31	7380297	1	O-RING	O-RING		

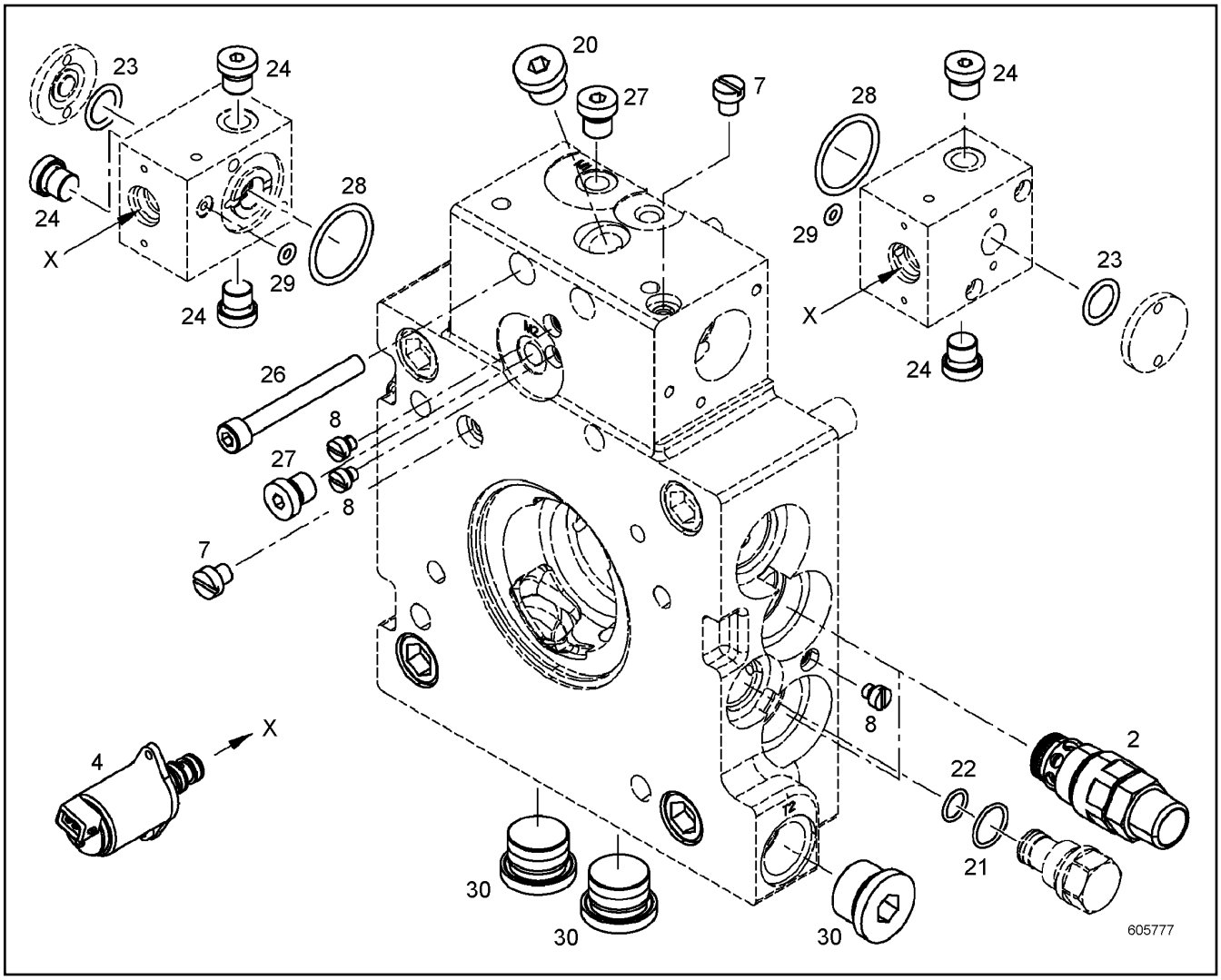

Pos.	Item	Quantity	Description	Bezeichnung	Serie	K
2	10332095	2	SEAL KIT PRESSURE VALVE	DS DRUCKVENTIL		
4	10123210	2	SEAL KIT PRESSUR.CONTROL VALVE	DS DRUCKREDUZIERVENTIL		
7	9881609	2	SCREW PLUG M8X1	VERSCHLUSSSCHRAUBE		
8	9268441	5	SCREW PLUG M6	VERSCHLUSSSCHRAUBE		
20	10137312	1	SCREW PLUG	VERSCHLUSSSCHRAUBE		
21	7381127	1	O-RING	O-RING		
22	7381128	1	O-RING	O-RING		
23	7380610	2	O-RING	O-RING		
24	10137113	4	SCREW PLUG	VERSCHLUSSSCHRAUBE		
26	11170484	2	SOCKET HEAD SCREW ISO 4762 M8X70 10.9	ZYLINDERSCHRAUBE		
27	10137115	2	SCREW PLUG	VERSCHLUSSSCHRAUBE		
28	10016947	2	O-RING	O-RING		
29	7022118	2	O-RING	O-RING		
30	10137108	3	SCREW PLUG	VERSCHLUSSSCHRAUBE		

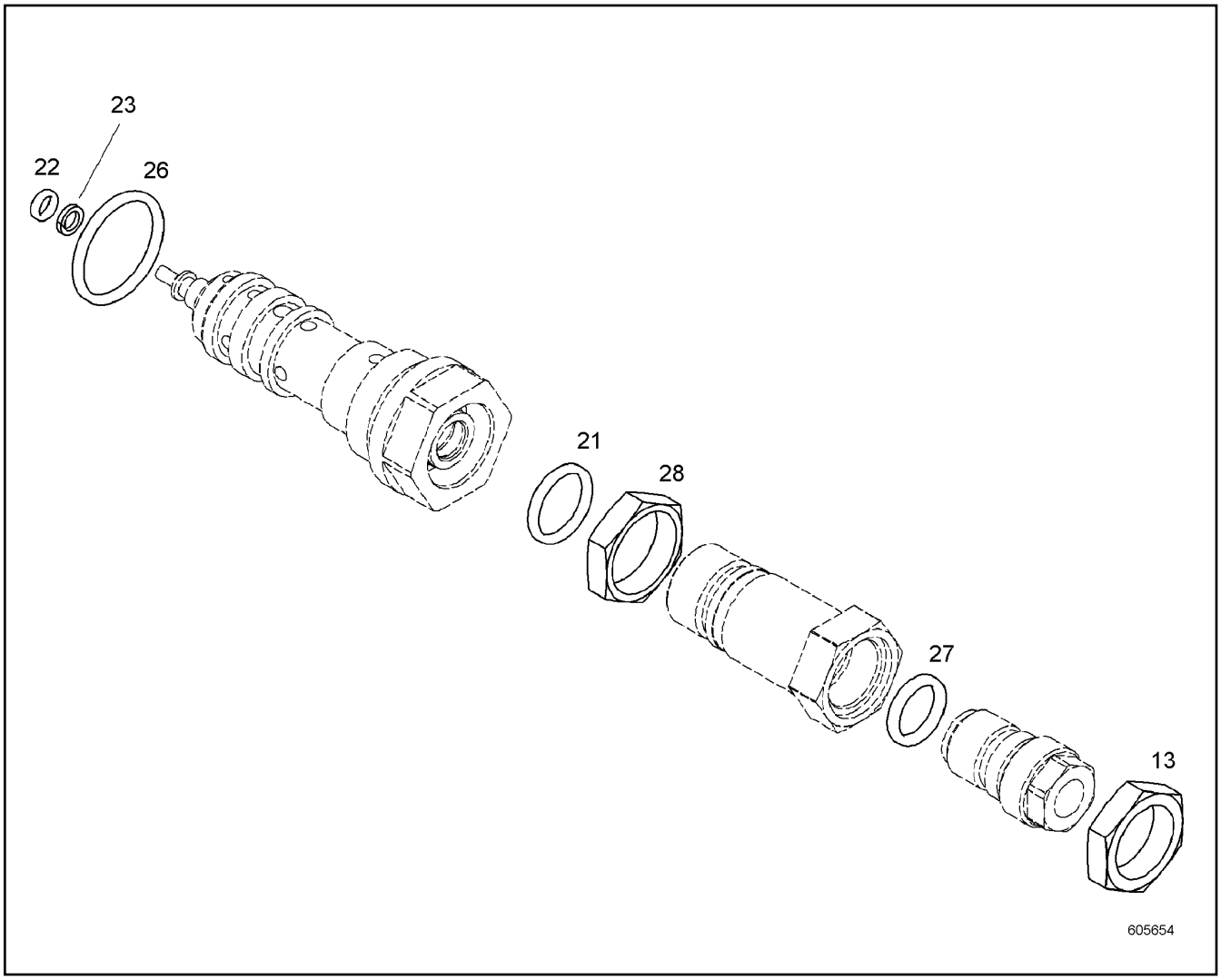

Pos.	Item	Quantity	Description	Bezeichnung	Serie	K
13	9072969	1	NUT M22X1.5 11SMNPB30+C;EN 10277-3	MUTTER		
21	7380987	1	O-RING	O-RING		
22	7381446	1	O-RING	O-RING		
23	7382212	1	BACK-UP RING CUT	STUETZRING GESCHL.		
26	7380608	1	O-RING	O-RING		
27	7380576	1	O-RING	O-RING		
28	9077401	1	NUT M24X1 9SMNPB28K	MUTTER		

OHNE BILD
WITHOUT ILLUSTRATION
SANS PLANCHE
SIN FIG.
SEM ILUSTRAÇÃO
БЕЗ ИЗОБРАЖЕНИЯ

600000

Pos.	Item	Quantity	Description	Bezeichnung	Serie	K
11	10129873	1	COUPLING FERRULE	KUPPLUNGSHUELSE		
20	4980947	2	SOCKET HEAD SCREW ISO 4762 M12X30 10.9	ZYLINDERSCHRAUBE		
22	7380605	1	O-RING	O-RING		

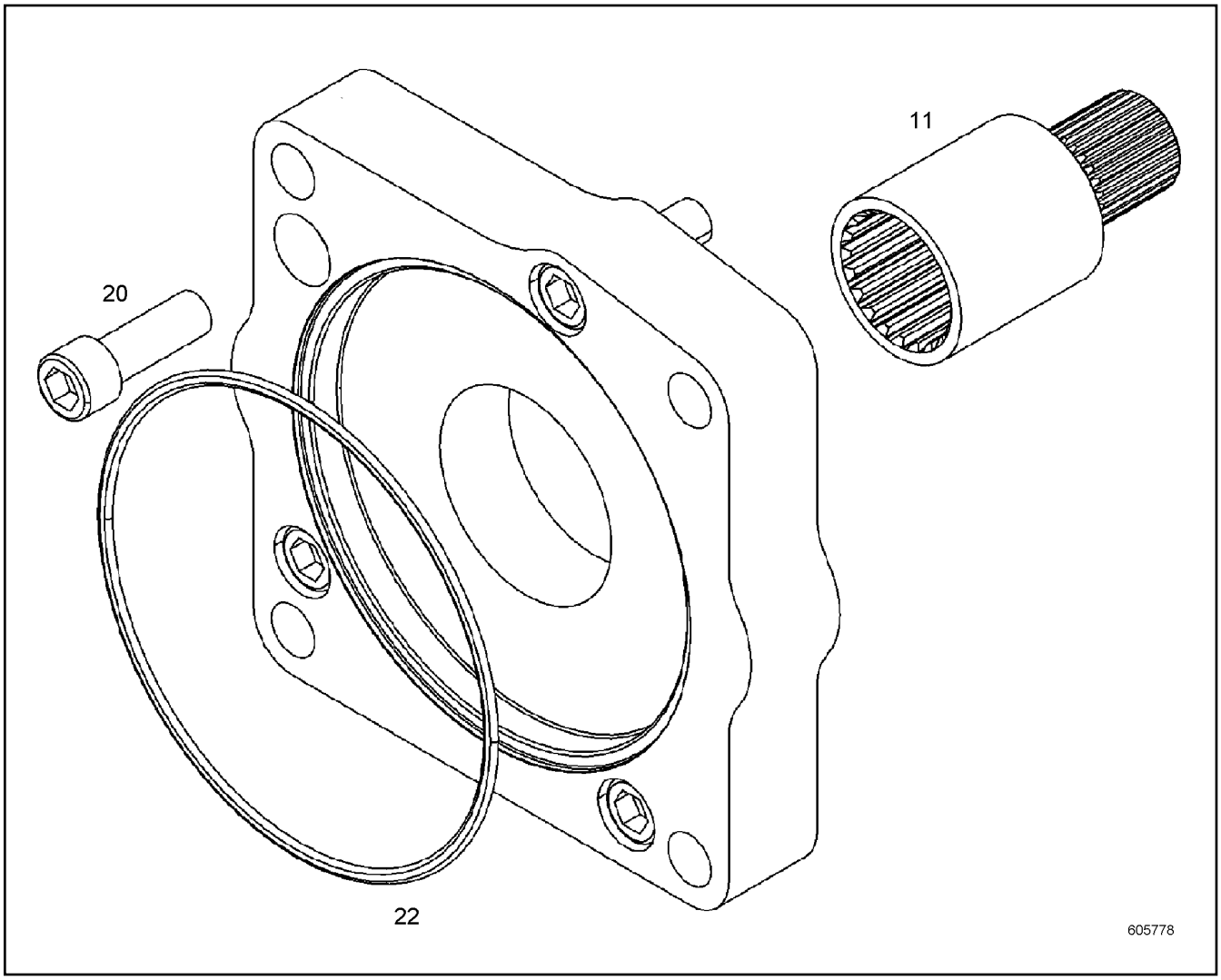

Pos.	Item	Quantity	Description	Bezeichnung	Serie	K
11	10130007	1	COUPLING FERRULE	KUPPLUNGSHUELSE		
20	4600513	4	SOCKET HEAD SCREW ISO 4762 M14X40 10.9	ZYLINDERSCHRAUBE		
22	7380601	1	O-RING	O-RING		

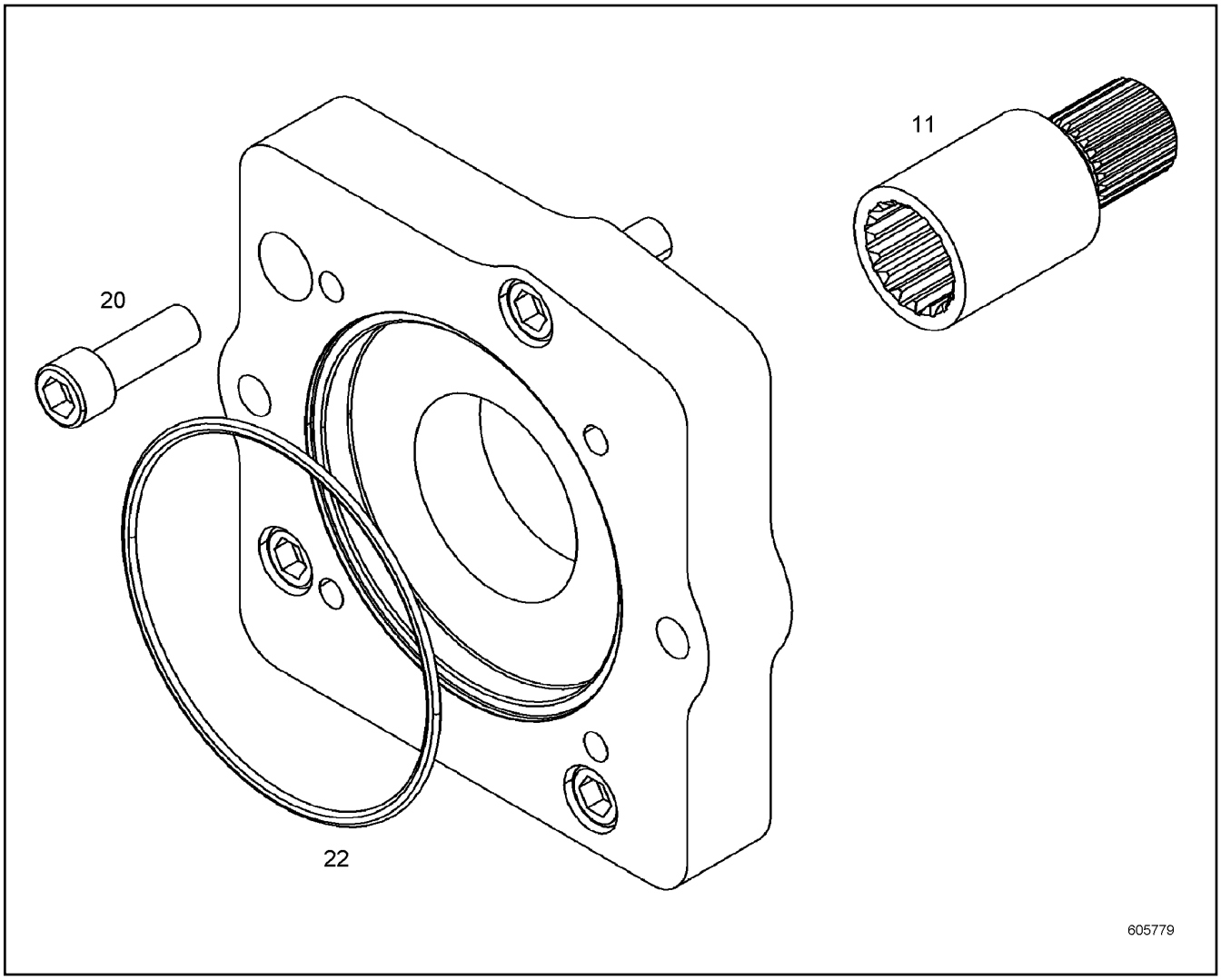

Pos.	Item	Quantity	Description	Bezeichnung	Serie	K
11	10132360	1	COUPLING FERRULE	KUPPLUNGSHUELSE		
20	4600513	4	SOCKET HEAD SCREW ISO 4762 M14X40 10.9	ZYLINDERSCHRAUBE		
22	7380691	1	O-RING	O-RING		

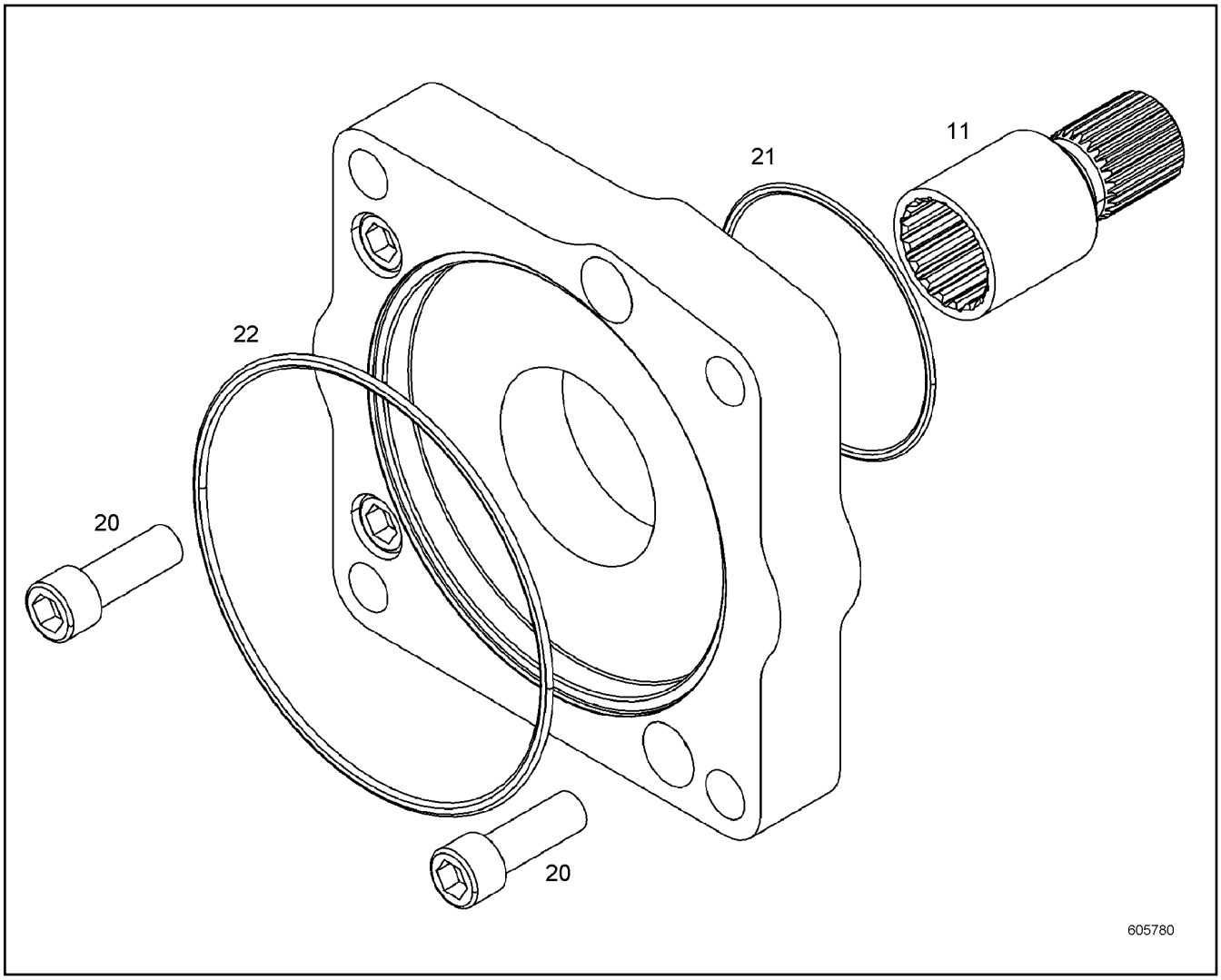

Pos.	Item	Quantity	Description	Bezeichnung	Serie	K
11	10117768	1	COUPLING FERRULE	KUPPLUNGSHUELSE		
20	4600513	4	SOCKET HEAD SCREW ISO 4762 M14X40 10.9	ZYLINDERSCHRAUBE		
21	7380297	1	O-RING	O-RING		
22	7380601	1	O-RING	O-RING		

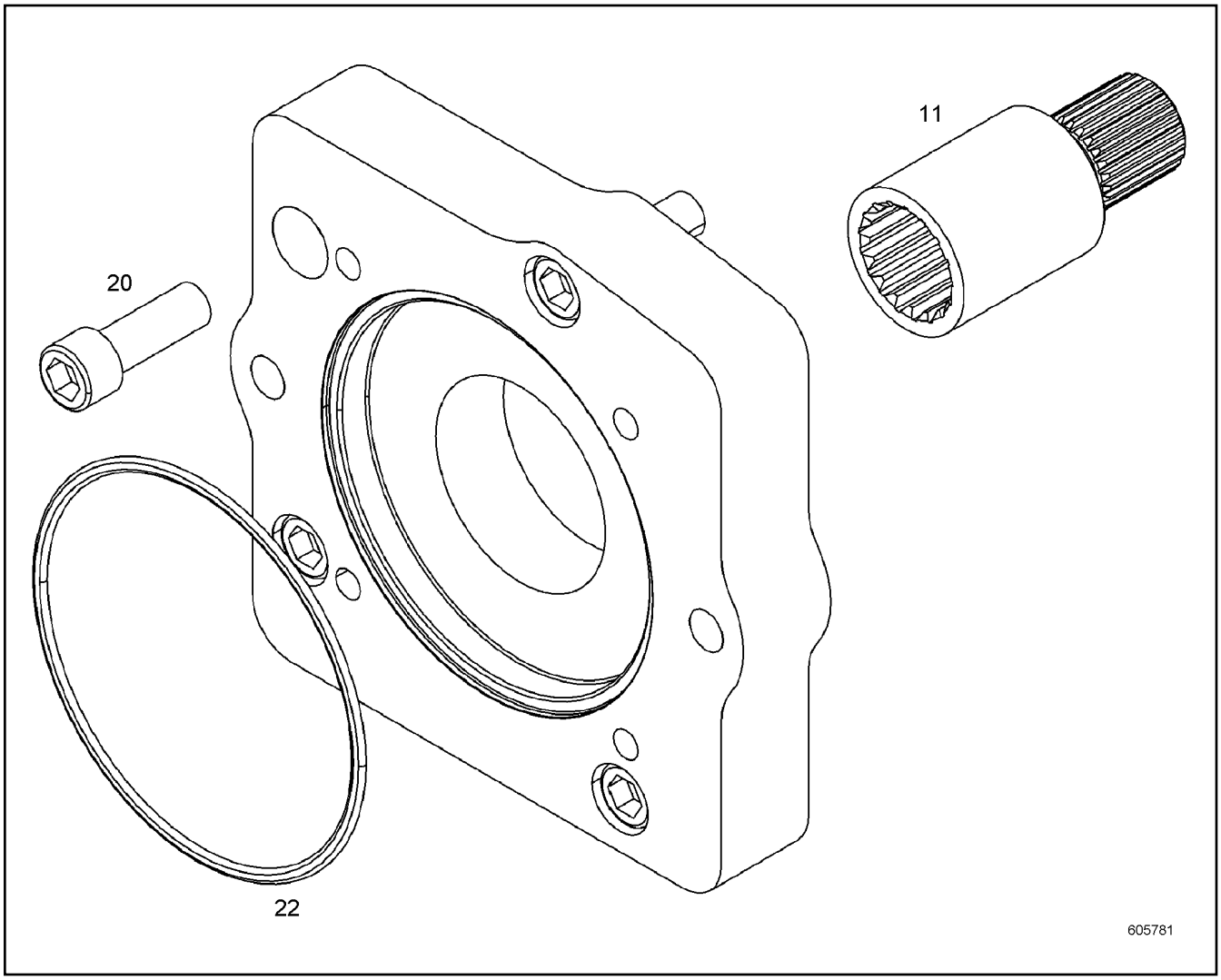

Pos.	Item	Quantity	Description	Bezeichnung	Serie	K
11	10138069	1	COUPLING FERRULE	KUPPLUNGSHUELSE		
20	4600513	4	SOCKET HEAD SCREW ISO 4762 M14X40 10.9	ZYLINDERSCHRAUBE		
22	7380691	1	O-RING	O-RING		

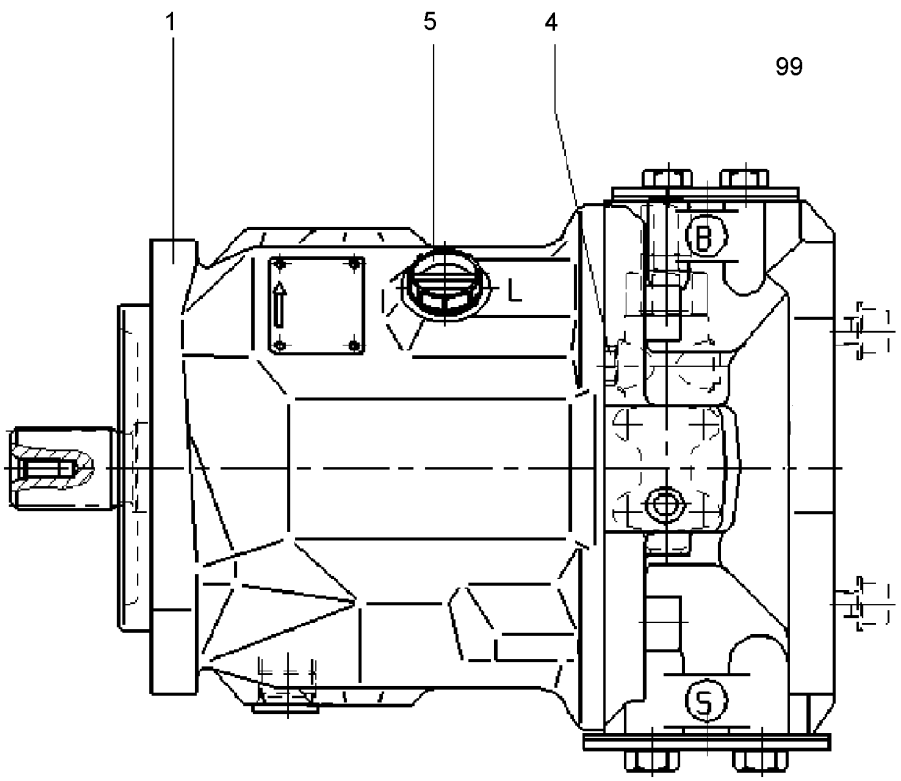

Pos.	Item	Quantity	Description	Bezeichnung	Serie	K
1	11221268	1	PUMP ELEMENT ⇨ ❑ 167	PUMPENELEMENT		
4	11220932	1	SEALING SCREW	DICHTSCHRAUBE		
5	11221267	1	SEALING SCREW	DICHTSCHRAUBE		
99	10351610	1	SEALING SET CPL ⇨ ❑ 174	DS KPL		

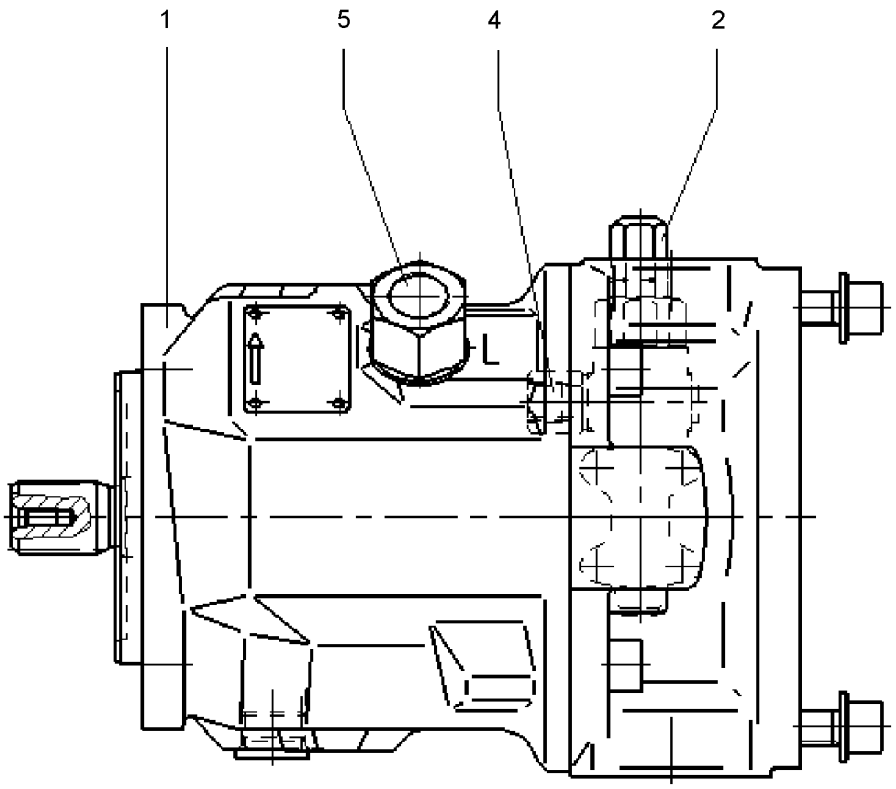

Pos.	Item	Quantity	Description	Bezeichnung	Serie	K
1	11221274	1	PUMP ELEMENT ⇨ ❑ 168	PUMPENELEMENT		
2	10351603	1	CONTROL VALVE ⇨ ❑ 171	STEUERVENTIL		
4	7019834	1	ADAPTOR ⇨ ❑ 172	ADAPTER		
5	11221276	1	ADAPTOR ⇨ ❑ 173	ADAPTER		

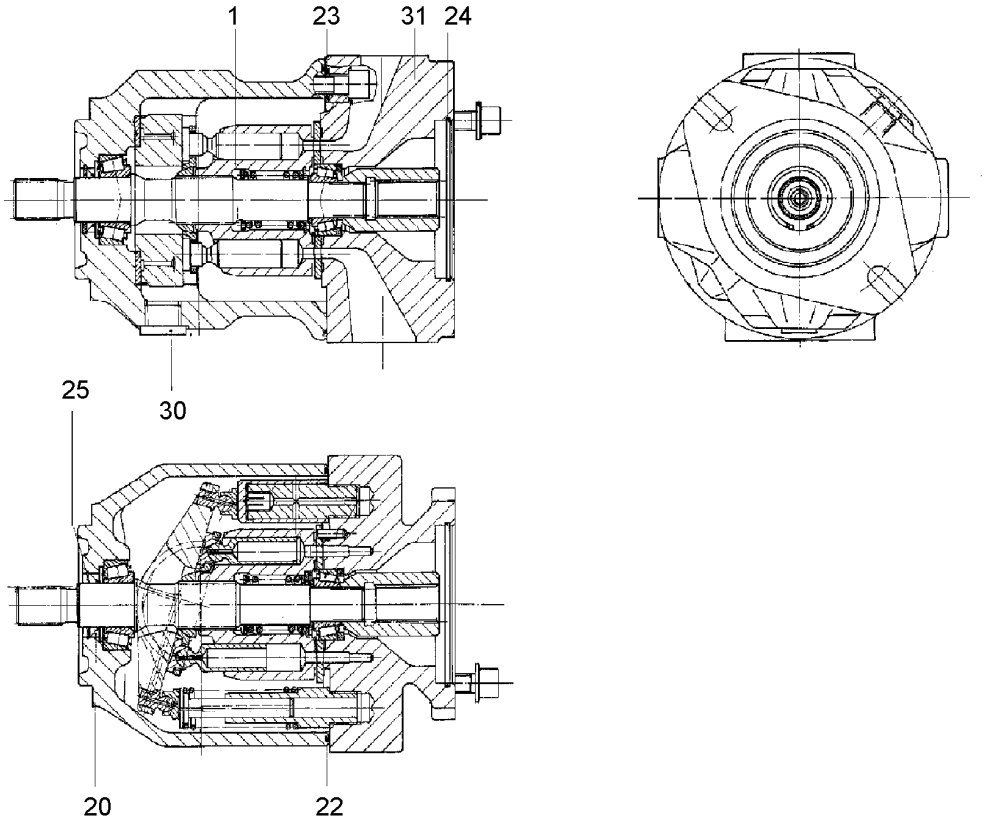

Pos.	Item	Quantity	Description	Bezeichnung	Serie	K
1	10324889	1	DRIVING GEAR ⇨ ❑ 169	TRIEBWERK		
20	710069514	1	SHAFT SEAL	WELLENDICHTRING		
22	10351605	1	O-RING	O-RING		
23	10351608	4	O-RING	O-RING		
24	11220389	1	O-RING	O-RING		
25	10220937	1	LOCKING RING AEHNL.DIN 984 40X1.75	SICHERUNGSRING		
30	11217837	1	SCREW PLUG	VERSCHLUSSSCHRAUBE		
31	7022127	1	DOUBLE PLUG	DOPPELABREISSSTOPFEN		

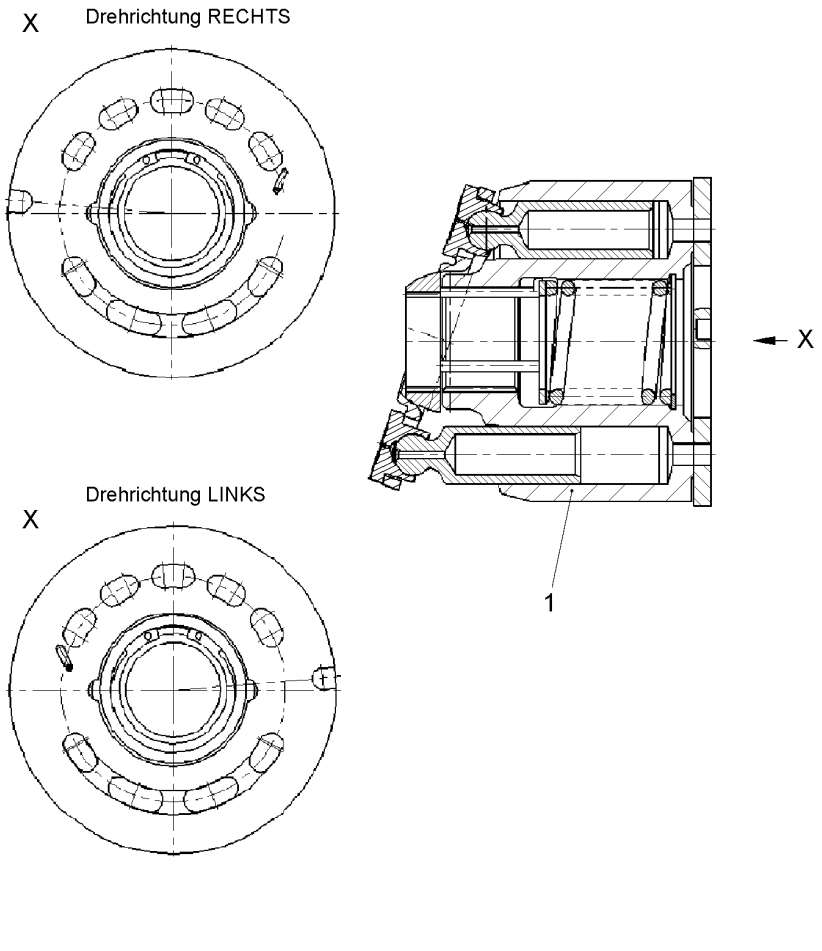

Pos.	Item	Quantity	Description	Bezeichnung	Serie	K
1	10324892	1	DRIVING GEAR ⇨ ❑ 170	TRIEBWERK		

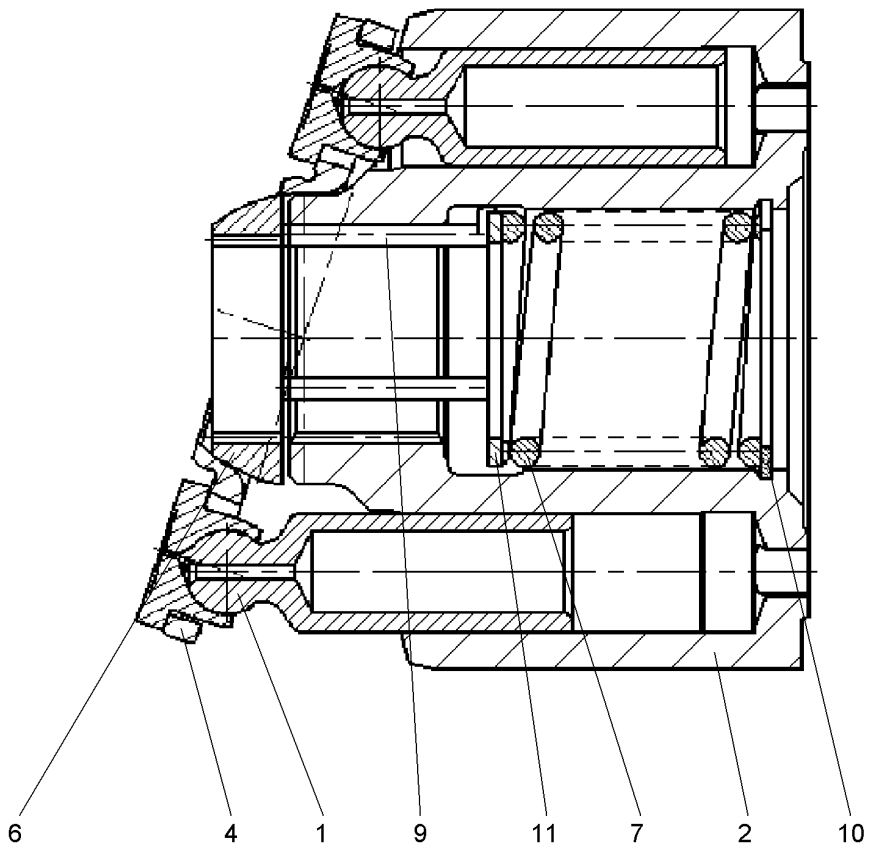

Pos.	Item	Quantity	Description	Bezeichnung	Serie	K
1	10324863	9	PISTON	KOLBEN		
2	10324901	1	CYLINDER	ZYLINDER		
4	7023459	1	PULL-BACK PLATE	RUECKZUGPLATTE		
6	10324872	1	PULL-BACK BALL	RUECKZUGKUGEL		
7	10324860	1	SPRING	FEDER		
9	10101458	3	PRESSURE PIN	DRUCKSTIFT		
10	10324881	1	V-RING	V-RING		
11	10324886	1	SUPPORTING WASHER	STUETZSCHEIBE		

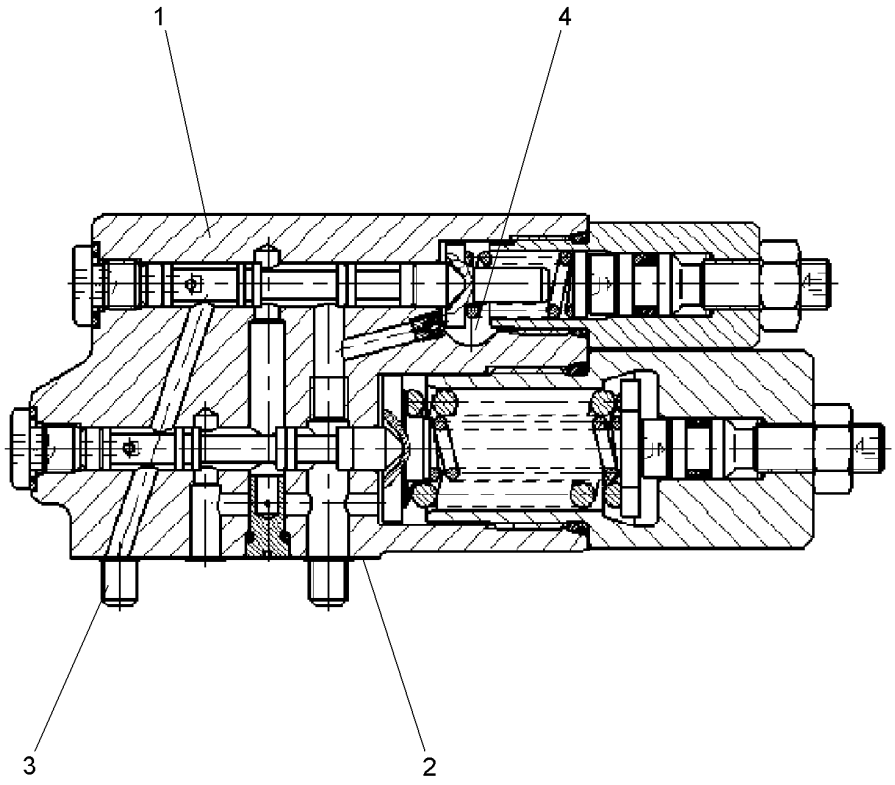

Pos.	Item	Quantity	Description	Bezeichnung	Serie	K
1	10409413	1	CONTROL VALVE	STEUERVENTIL		
2	10297876	1	SEAL	DICHTUNG		
3	11215951	4	SOCKET HEAD SCREW	ZYLINDERSCHRAUBE		
4	10324900	1	SCREW PLUG 7/16-20UNF-2A	VERSCHLUSSSCHRAUBE		

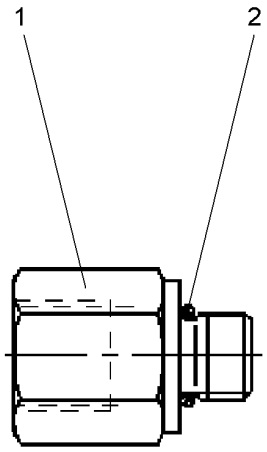

604751

Pos.	Item	Quantity	Description	Bezeichnung	Serie	K
1	570950308	1	ADAPTOR	ADAPTER		
2	7019733	1	O-RING	O-RING		

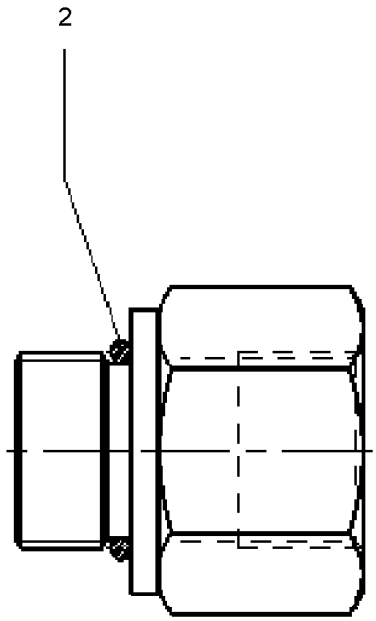

604782

Pos.	Item	Quantity	Description	Bezeichnung	Serie	K
2	11221283	1	O-RING	O-RING		

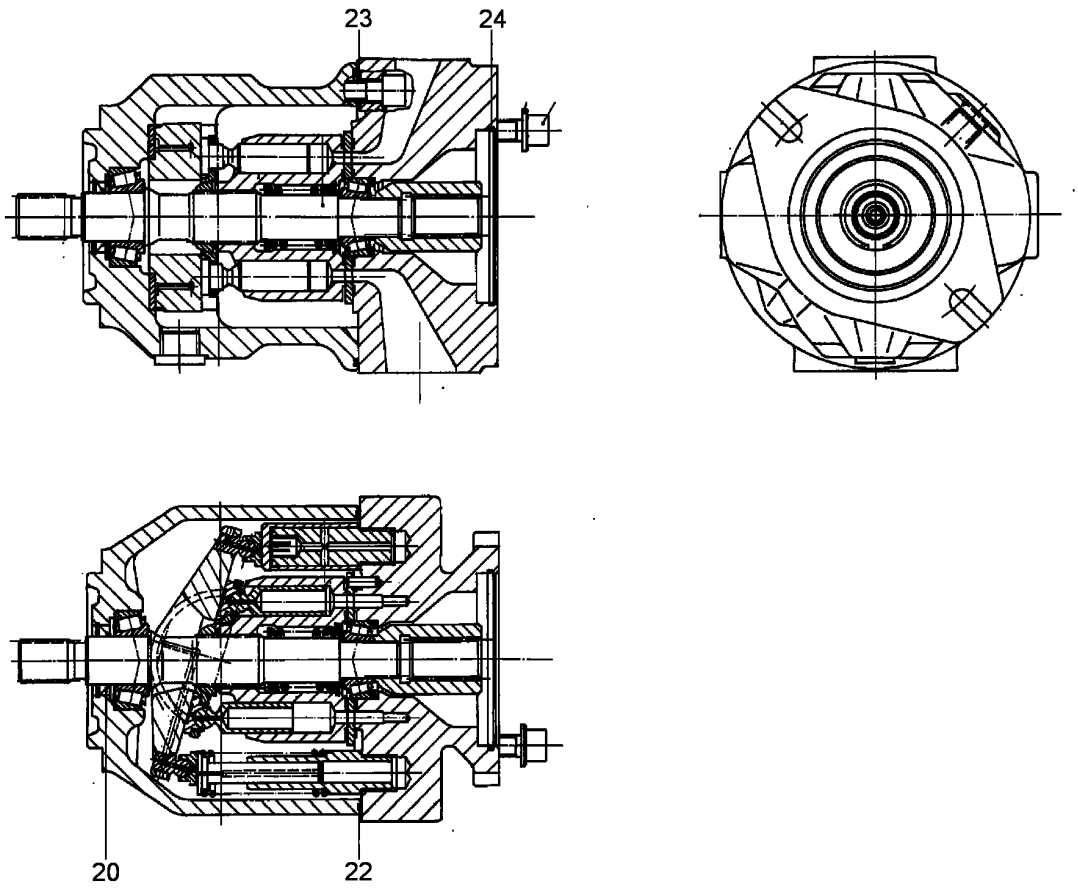

Pos.	Item	Quantity	Description	Bezeichnung	Serie	K
20	710069514	1	SHAFT SEAL	WELLENDICHTRING		
22	10351605	1	O-RING	O-RING		
23	10351608	4	O-RING	O-RING		
24	11220389	1	O-RING	O-RING		

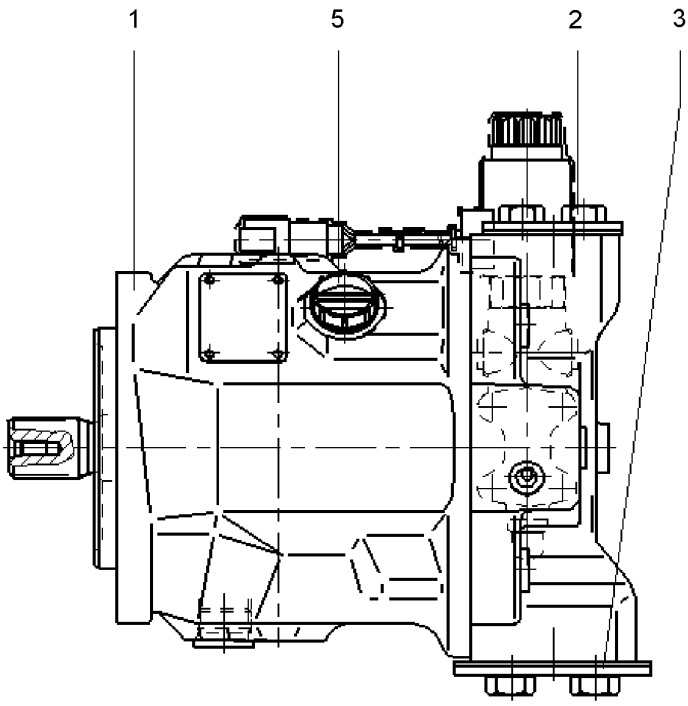

Pos.	Item	Quantity	Description	Bezeichnung	Serie	K
1	11215913	1	PUMP ELEMENT ⇨ ❑ 176	PUMPENELEMENT		
2	11215698	1	FLANGE COVER	FLANSCHABDECKUNG		
3	11215699	1	FLANGE COVER	FLANSCHABDECKUNG		
5	10008093	1	SCREW PLUG 3/4"-16UNF	VERSCHLUSSSCHRAUBE		

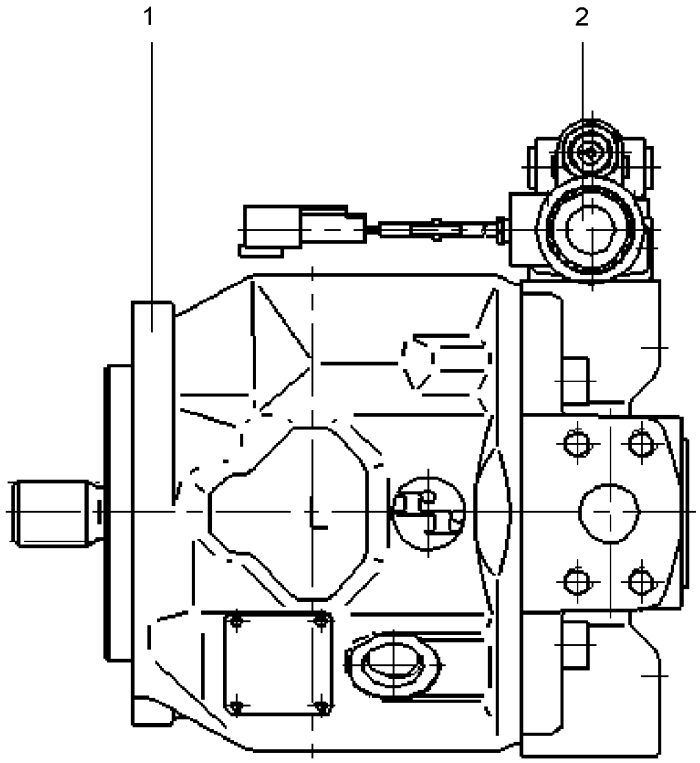

Pos.	Item	Quantity	Description	Bezeichnung	Serie	K
1	11215936	1	PUMP ELEMENT ⇨ ❑ 177	PUMPENELEMENT		
2	10114975	1	CONTROL VALVE ⇨ ❑ 180	STEUERVENTIL		

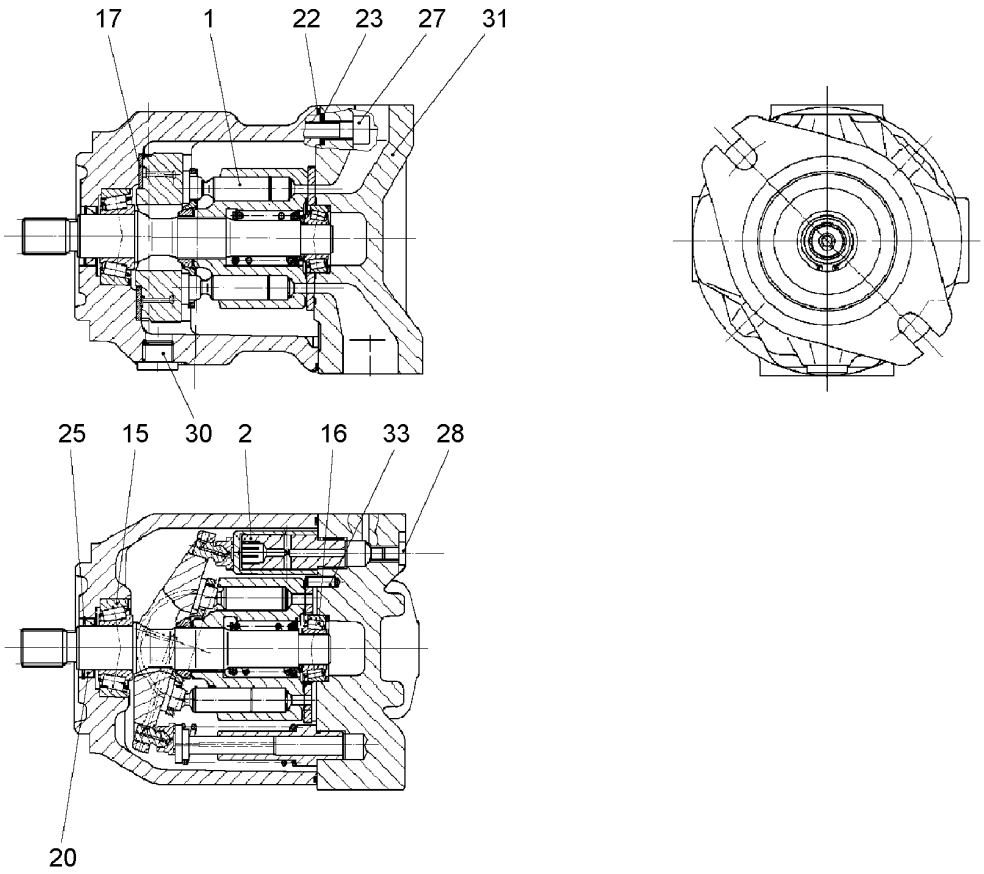

Pos.	Item	Quantity	Description	Bezeichnung	Serie	K
1	10287664	1	DRIVING GEAR ⇨ ❑ 178	TRIEBWERK		
2	10287665	1	ADJUSTING PIECE ⇨ ❑ 179	VERSTELLTEIL		
15	10355730	1	TAPERED ROLLER BEARING	KEGELROLLENLAGER		
16	10355731	1	TAPERED ROLLER BEARING	KEGELROLLENLAGER		
17	7413401	2	BEARING SHELL	LAGERSCHALE		
20	7413402	1	SHAFT SEAL	WELLENDICHTRING		
22	10802833	1	O-RING	O-RING		
23	11215707	4	O-RING	O-RING		
25	10008092	1	LOCKING RING DIN 984 35X1.5	SICHERUNGSRING		
27	10355735	4	SOCKET HEAD SCREW M10X30	ZYLINDERSCHRAUBE		
28	10115237	2	SCREW PLUG M10X1	VERSCHLUSSSCHRAUBE		
30	10008093	1	SCREW PLUG 3/4"-16UNF	VERSCHLUSSSCHRAUBE		
31	7022127	1	DOUBLE PLUG	DOPPELABREISSSTOPFEN		
33	570948608	1	PARALLEL PIN ISO 2338 6M6X18 ST	ZYLINDERSTIFT		

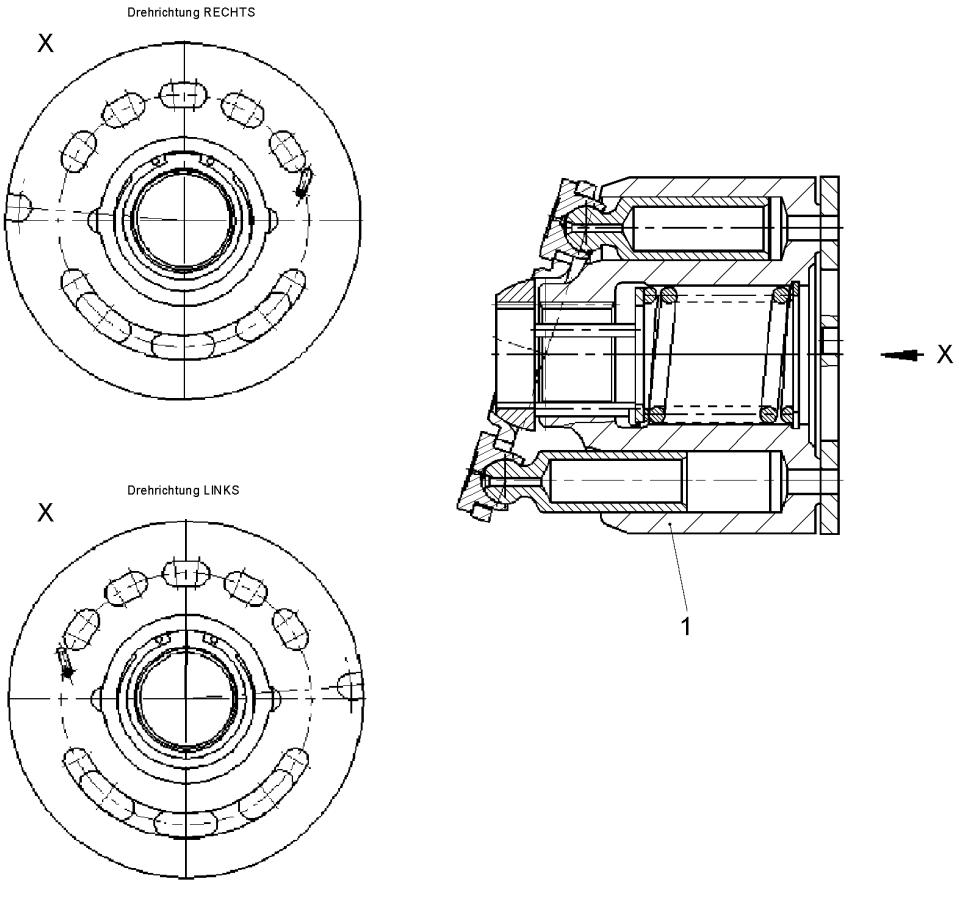

Pos.	Item	Quantity	Description	Bezeichnung	Serie	K
1	10287725	1	DRIVING GEAR	TRIEBWERK		

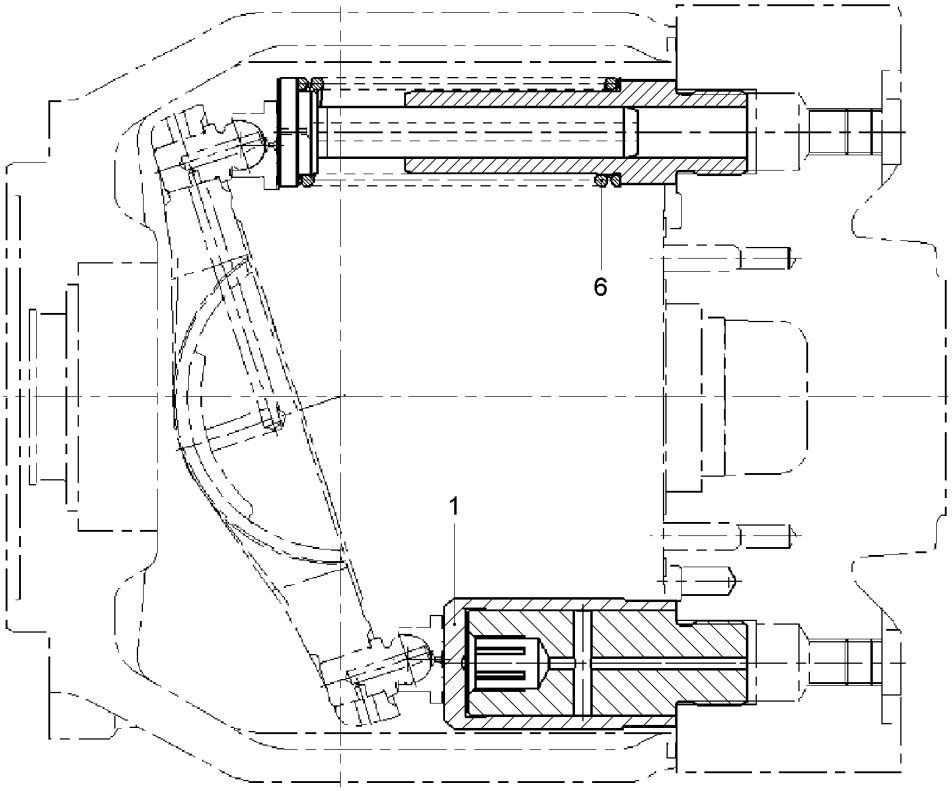

604431

Pos.	Item	Quantity	Description	Bezeichnung	Serie	K
1	10287733	1	DISPLACEMENT PISTON	VERSTELLKOLBEN		
6	10287741	1	SPRING	FEDER		

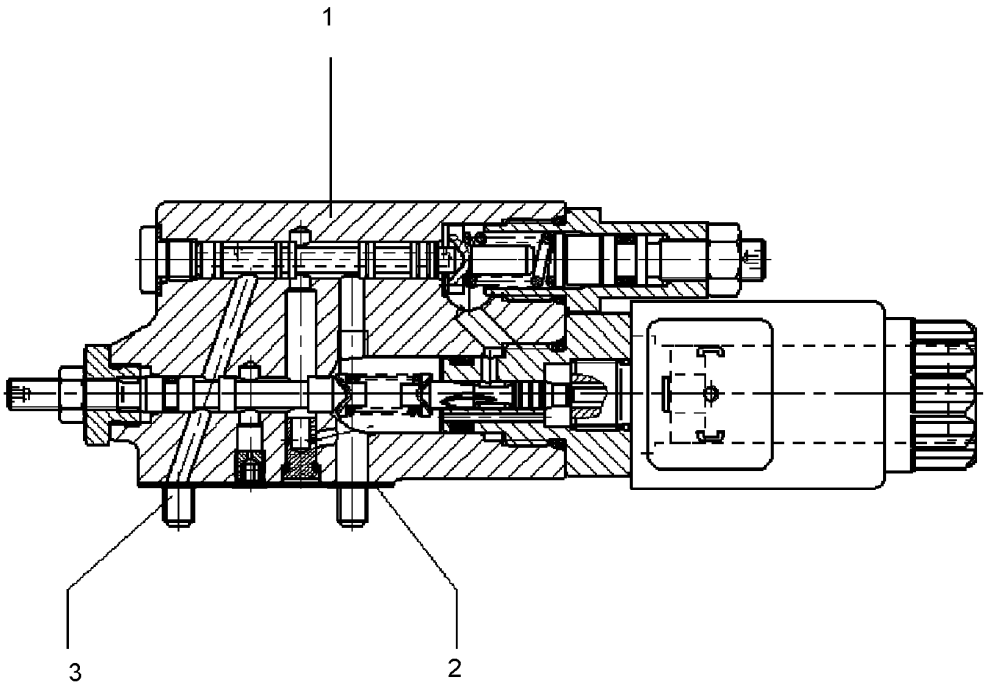

Pos.	Item	Quantity	Description	Bezeichnung	Serie	K
1	11215942	1	CONTROL VALVE	STEUERVENTIL		
2	10297876	1	SEAL	DICHTUNG		
3	11215951	4	SOCKET HEAD SCREW	ZYLINDERSCHRAUBE		

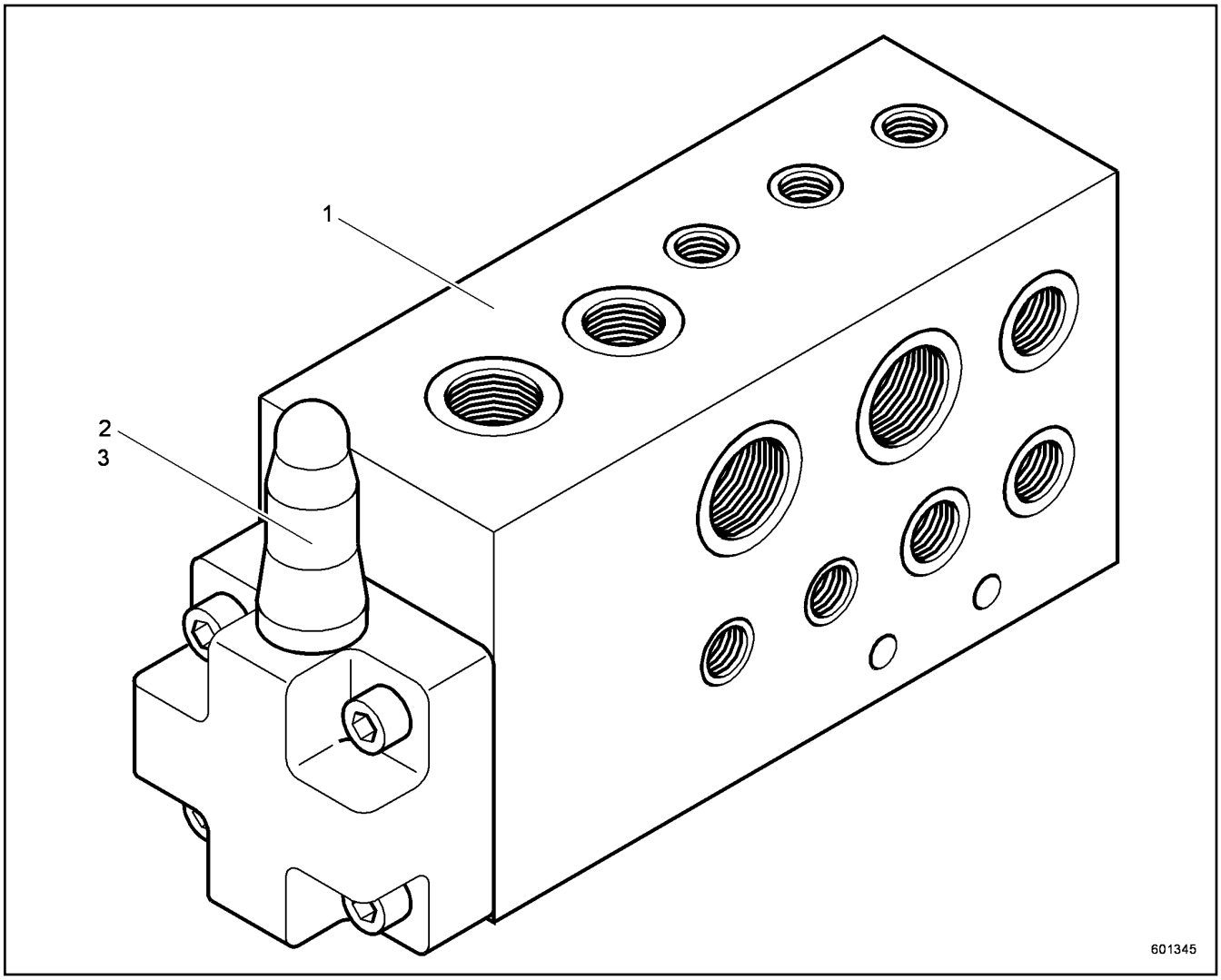

Pos.	Item	Quantity	Description	Bezeichnung	Serie	K
1	511640614	1	CONTROL BLOCK	STEUERBLOCK		
2	511640714	1	BUILT-IN VALVE	EINBAUVENTIL		
3	511640814	1	CONTROL LID	STEUERDECKEL		

OHNE BILD
WITHOUT ILLUSTRATION
SANS PLANCHE
SIN FIG.
SEM ILUSTRAÇÃO
БЕЗ ИЗОБРАЖЕНИЯ

600000

Pos.	Item	Quantity	Description	Bezeichnung	Serie	K
10	10225991	1	O-RING	O-RING		

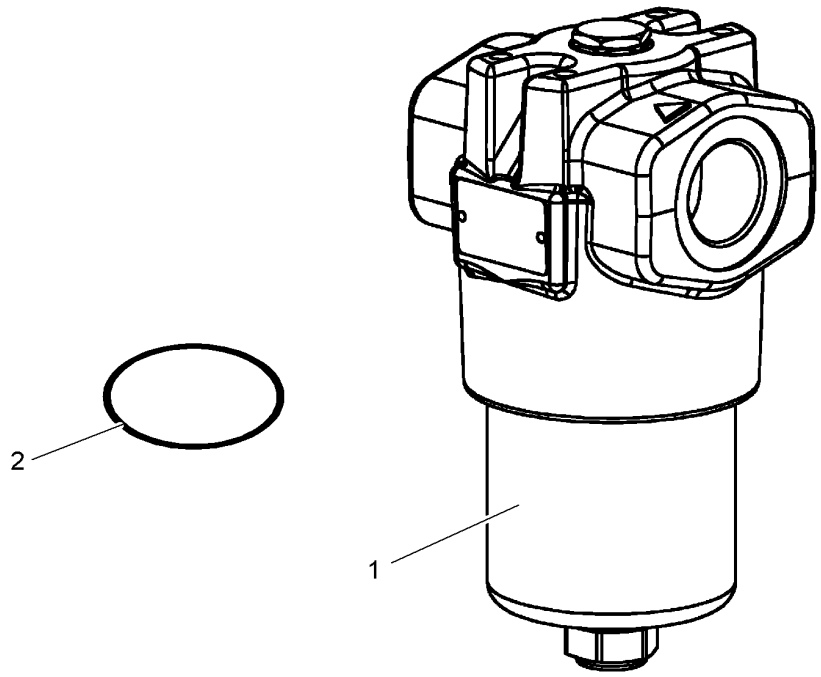

Pos.	Item	Quantity	Description	Bezeichnung	Serie	K
1	10037623	1	FILTER INSERT	FILTEREINSATZ		
2	10350604	1	O-RING	O-RING		
3	10224159	1	SEALING SET CPL	DS KPL		

OHNE BILD
WITHOUT ILLUSTRATION
SANS PLANCHE
SIN FIG.
SEM ILUSTRAÇÃO
БЕЗ ИЗОБРАЖЕНИЯ

600000

Pos.	Item	Quantity	Description	Bezeichnung	Serie	K
11	11247122	1	CABLE LOOM W 1	KABELSTRANG W 1		
12	10123877	2	RUBBER RING	GUMMIRING		
13	6205239	1	SOCKET	STECKDOSE		
21	10226635	1	RELAY	RELAIS		

ACHTUNG !
ATTENTION !
ATTENTION !
ATENCIÓN !
ATENÇÃO !
ВНИМАНИЕ

Für Schlauchbestellungen kann über die Schlauchnummer, in der entsprechenden Schlauchliste, die Identnummer festgestellt werden.

For ordering flexible hoses you can find the identification number through the hose-number in the corresponding hose-list.

Pour des ordres de tuyau flexible le nombre d'identification on voit dans la liste de tuyau flexible correspondente.

Para el pedido de manguera, indicar el número de identificación de la manguera de la lista respectiva.

Para se encomendar uma mangueira, consulte o número de identificaçao na respectiva lista de mangueiras.

Для оформления заказов на шланги/рукавы идент. № может быть определен при помощи номера шланга/рукава, указанного в соотетствующем перечне шлангов/рукавов.

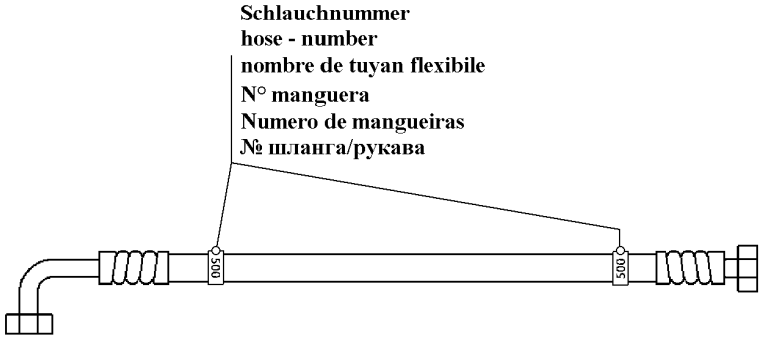

500000

Pos.	Item	Quantity	Description	Bezeichnung	Serie	K
382	993694214	1	HOSE CPL	SCHLAUCH KPL		
391	996779514	1	HOSE CPL	SCHLAUCH KPL		
392	996779614	1	HOSE CPL	SCHLAUCH KPL		
400	992835314	1	HOSE CPL	SCHLAUCH KPL		
401	991139814	1	HOSE CPL	SCHLAUCH KPL		
402	995421014	1	HOSE CPL	SCHLAUCH KPL		
403	928266514	1	HOSE CPL	SCHLAUCH KPL		
404	914757914	1	HOSE CPL	SCHLAUCH KPL		
405	991216914	1	HOSE CPL	SCHLAUCH KPL		
406	991964414	1	HOSE CPL	SCHLAUCH KPL		
407	928857314	1	HOSE CPL	SCHLAUCH KPL		
408	990053014	1	HOSE CPL	SCHLAUCH KPL		
409	993643514	1	HOSE CPL	SCHLAUCH KPL		
410	995512314	1	HOSE CPL	SCHLAUCH KPL		
411	928272714	1	HOSE CPL	SCHLAUCH KPL		
412	996459514	1	HOSE CPL	SCHLAUCH KPL		
413	996735814	1	HOSE CPL	SCHLAUCH KPL		
416	995180714	1	HOSE CPL	SCHLAUCH KPL		
418	928868414	1	HOSE CPL	SCHLAUCH KPL		
419	991547014	1	HOSE CPL	SCHLAUCH KPL		
420	929478114	1	HOSE CPL	SCHLAUCH KPL		
421	919143414	1	HOSE CPL	SCHLAUCH KPL		
422	919167714	1	HOSE CPL	SCHLAUCH KPL		
424	995961914	1	HOSE CPL	SCHLAUCH KPL		
425	995263914	1	HOSE CPL	SCHLAUCH KPL		
427	928880614	1	HOSE CPL	SCHLAUCH KPL		

ACHTUNG !
ATTENTION !
ATTENTION !
ATENCIÓN !
ATENÇÃO !
ВНИМАНИЕ

Für Schlauchbestellungen kann über die Schlauchnummer, in der entsprechenden Schlauchliste, die Identnummer festgestellt werden.

For ordering flexible hoses you can find the identification number through the hose-number in the corresponding hose-list.

Pour des ordres de tuyau flexible le nombre d'identification on voit dans la liste de tuyau flexible correspondente.

Para el pedido de manguera, indicar el número de identificación de la manguera de la lista respectiva.

Para se encomendar uma mangueira, consulte o número de identificaçao na respectiva lista de mangueiras.

Для оформления заказов на шланги/рукавы идент. № может быть определен при помощи номера шланга/рукава, указанного в соотетствующем перечне шлангов/рукавов.

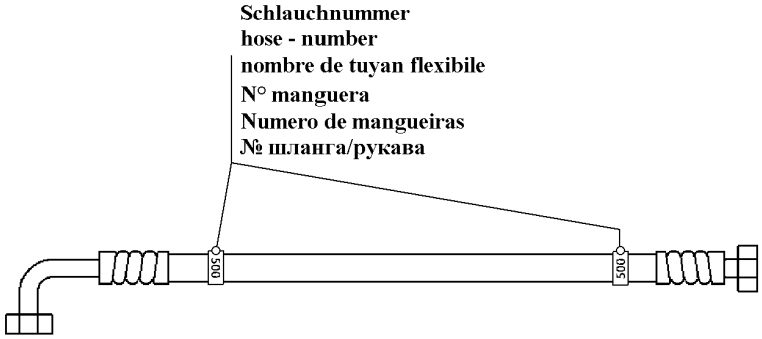

500000

Pos.	Item	Quantity	Description	Bezeichnung	Serie	K
430	918269214	1	HOSE CPL	SCHLAUCH KPL		
432	918874514	1	HOSE CPL	SCHLAUCH KPL		
434	996459714	1	HOSE CPL	SCHLAUCH KPL		
435	928611014	1	HOSE CPL	SCHLAUCH KPL		
504	995972514	1	HOSE CPL	SCHLAUCH KPL		
505	995972614	1	HOSE CPL	SCHLAUCH KPL		
552	991587514	1	HOSE CPL	SCHLAUCH KPL		
560	995974314	1	HOSE CPL	SCHLAUCH KPL		
570	991390514	1	HOSE CPL	SCHLAUCH KPL		
572	918245214	1	HOSE CPL	SCHLAUCH KPL		
619	995943514	1	HOSE CPL	SCHLAUCH KPL		
620	995943614	1	HOSE CPL	SCHLAUCH KPL		
628	991194914	1	HOSE CPL	SCHLAUCH KPL		
629	995943814	1	HOSE CPL	SCHLAUCH KPL		
822	996770614	1	HOSE CPL	SCHLAUCH KPL		
825	997058014	1	HOSE CPL	SCHLAUCH KPL		
916	995959114	1	HOSE CPL	SCHLAUCH KPL		

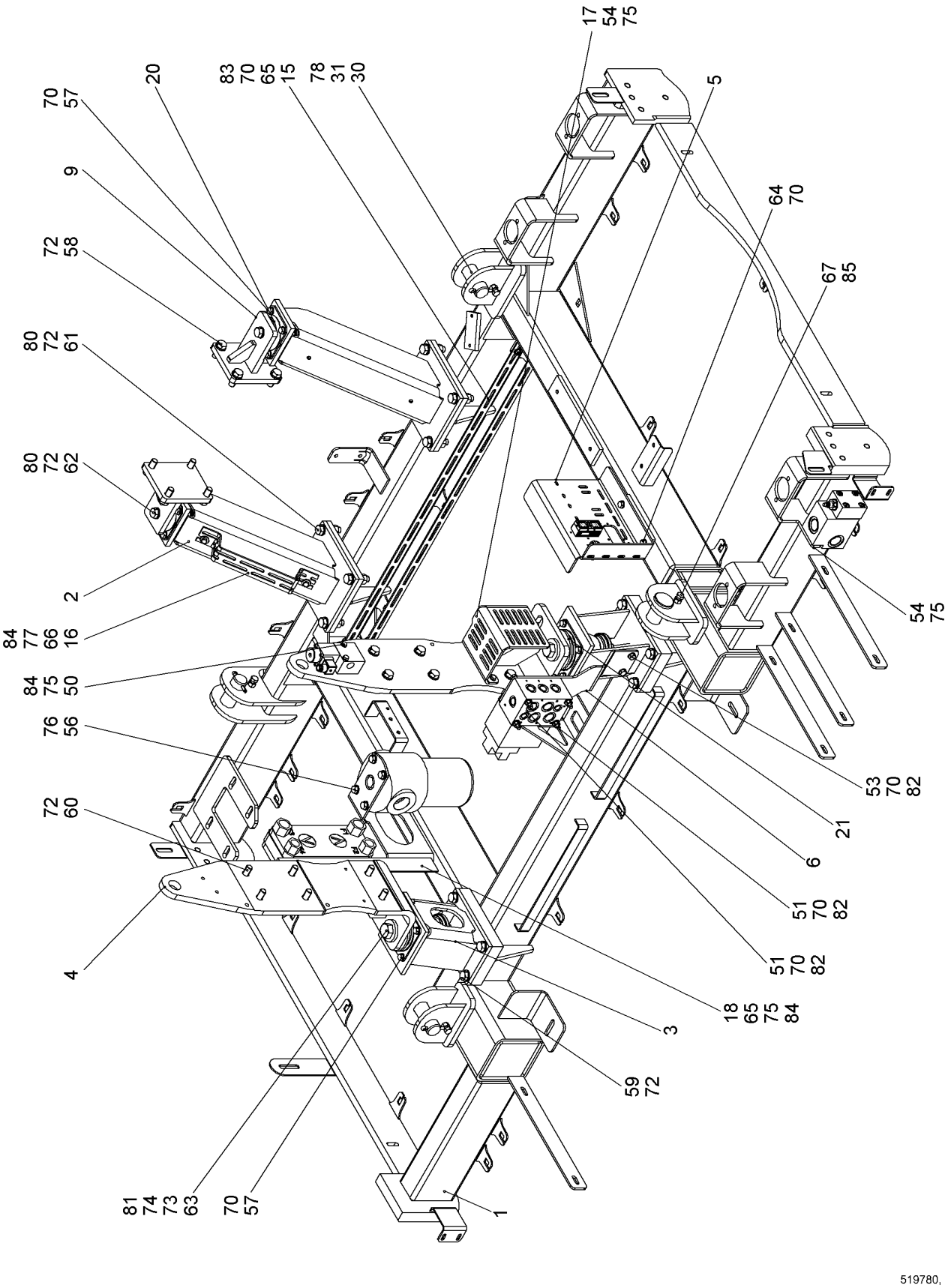

24.5.2017 519780 LIEBHERR	**138376_ETK_001** **MOTOR BEARING CPL** **MOTORLAGER KPL**	❑ 187 (1/2) **11 24 113 8**

Pos.	Item	Quantity	Description	Bezeichnung	Serie	K
1	11247688	1	FRAME CPL	RAHMEN KPL		
2	11249800	2	CONSOLE	KONSOLE		
3	10579755	2	CONSOLE	KONSOLE		
4	11250222	2	CONSOLE	KONSOLE		
5	10579779	1	CONSOLE	KONSOLE		
6	11215384	1	CONSOLE	KONSOLE		
9	11249889	2	CONSOLE	KONSOLE		
15	11234799	2	SLOTTED TAPE STEEL	SCHLITZBANDSTAHL		
16	11263413	1	BRACKET	BUEGEL		
17	11263501	1	CONSOLE	KONSOLE		
18	11263757	1	ANGLE	WINKEL		
21	746923314	2	CONICAL MOUNT	KONUSLAGER		
30	11944129	4	PIN	BOLZEN		
31	433009014	4	SPLIT PIN ISO 1234 8X56 A4	SPLINT		
50	10538809	2	HEX SCREW ISO 4017 M8X80 A4-70	SECHSKANTSCHRAUBE		
51	10538824	6	HEX SCREW ISO 4017 M10X110 A4-70	SECHSKANTSCHRAUBE		
53	406511614	2	HEX SCREW ISO 4017 M10X30 A4-70	SECHSKANTSCHRAUBE		
54	406518814	4	HEX SCREW ISO 4017 M8X20 A4-70	SECHSKANTSCHRAUBE		
56	406517914	4	HEX SCREW ISO 4017 M12X25 A4-70	SECHSKANTSCHRAUBE		
57	406527414	16	HEX SCREW ISO 4017 M10X18 A4-70	SECHSKANTSCHRAUBE		
58	10539318	8	HEX SCREW ISO 4017 M16X40 10.9	SECHSKANTSCHRAUBE		
59	10539317	8	HEX SCREW ISO 4017 M16X35 10.9	SECHSKANTSCHRAUBE		
60	10543902	12	HEX SCREW ISO 4017 M16X45 10.9	SECHSKANTSCHRAUBE		
61	10543905	8	HEX SCREW ISO 4017 M16X60 10.9	SECHSKANTSCHRAUBE		
62	10543914	2	HEX SCREW ISO 4017 M16X130 10.9	SECHSKANTSCHRAUBE		
63	10544017	2	HEX SCREW ISO 4014 M24X200 10.9	SECHSKANTSCHRAUBE		
64	406527314	2	HEX SCREW ISO 4017 M10X16 A4-70	SECHSKANTSCHRAUBE		
65	406501414	8	HEX SCREW ISO 4017 M8X25 A4-70	SECHSKANTSCHRAUBE		
66	406501314	2	HEX SCREW ISO 4017 M8X30 A4-70	SECHSKANTSCHRAUBE		
67	406511414	8	HEX SCREW ISO 4017 M12X40 A4-70	SECHSKANTSCHRAUBE		
70	420001114	42	WASHER ISO 7089 10 A4	SCHEIBE		
72	10544172	48	WASHER ISO 7089 16	SCHEIBE		
73	883203014	2	WASHER DIN 6340 25	SCHEIBE		
74	460014603	2	WASHER DIN 6916 25 C45	SCHEIBE		
75	420001014	16	WASHER ISO 7089 8 A4	SCHEIBE		
76	4901782	4	WASHER ISO 7089 12 A4	SCHEIBE		
77	421300514	4	WASHER DIN 6340 8.4 C35	SCHEIBE		
78	421103014	4	WASHER DIN EN 28738 40 ST	SCHEIBE		
80	10544154	10	HEX NUT ISO 4032 M16 10	SECHSKANTMUTTER		
81	10544158	2	HEX NUT ISO 4032 M24 10	SECHSKANTMUTTER		
82	411514614	8	HEX NUT ISO 4032 M10 A4-70	SECHSKANTMUTTER		
83	411515014	4	HEX NUT ISO 4032 M8 A4-70	SECHSKANTMUTTER		
84	10540493	8	HEX NUT ISO 10511 M8 A4	SECHSKANTMUTTER		
85	411516914	8	HEX NUT ISO 4032 M12 A4-70	SECHSKANTMUTTER		

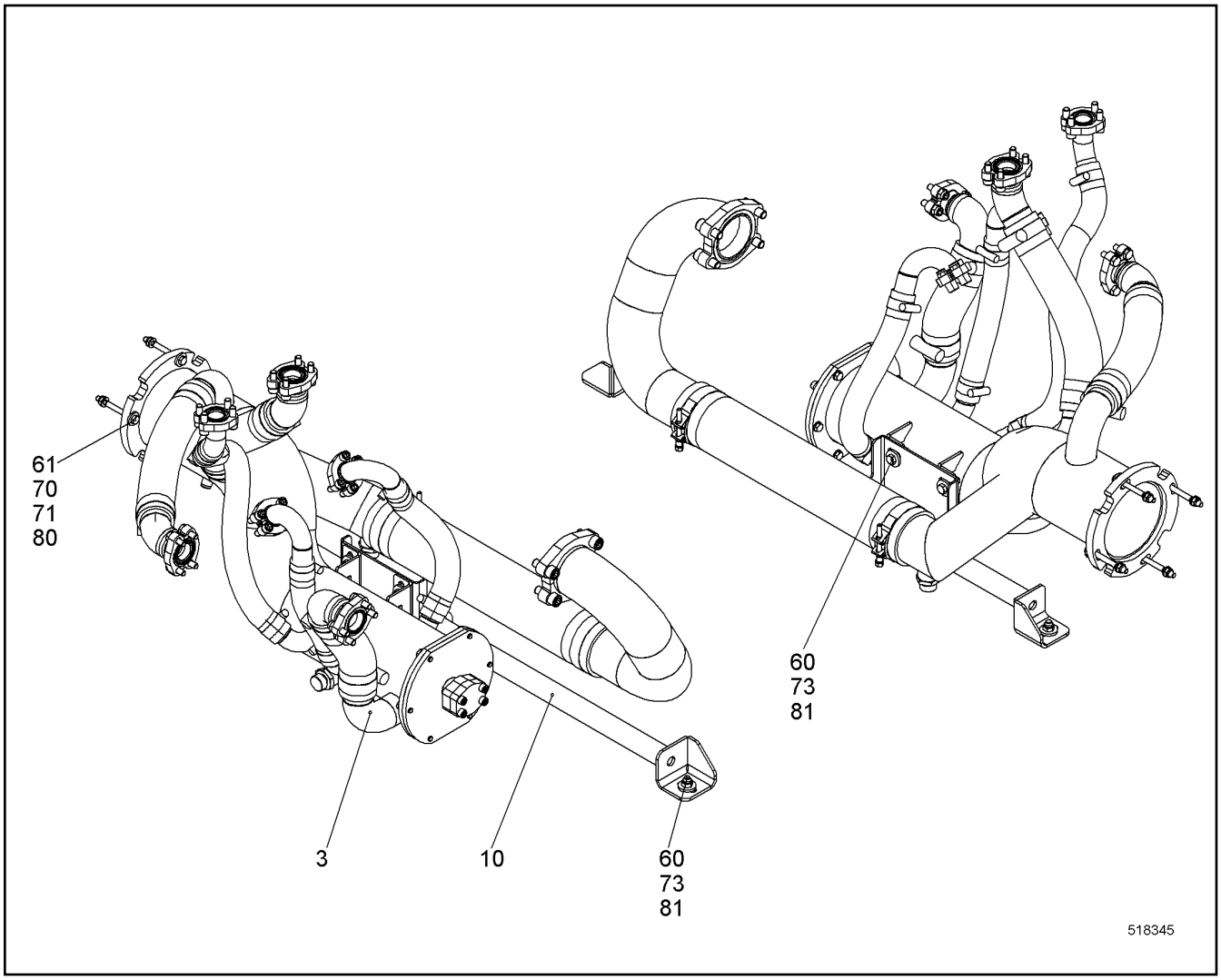

Pos.	Item	Quantity	Description	Bezeichnung	Serie	K
3	10575322	1	INTAKE PIPE OIL CPL ⇨ ❑ 190	ANSAUGROHR OEL KPL		
10	10579104	1	HOLDER	HALTER		
60	406511414	6	HEX SCREW ISO 4017 M12X40 A4-70	SECHSKANTSCHRAUBE		
61	4002195	4	HEX SCREW ISO 4014 M10X100 10.9	SECHSKANTSCHRAUBE		
70	420001114	4	WASHER ISO 7089 10 A4	SCHEIBE		
71	421300214	4	WASHER DIN 6340 10.5 C35	SCHEIBE		
73	4635283	12	WASHER DIN 6340 13 ST	SCHEIBE		
80	411901114	4	HEX NUT DIN 985 M10 10	SECHSKANTMUTTER		
81	10540495	6	HEX NUT ISO 10511 M12 A4	SECHSKANTMUTTER		

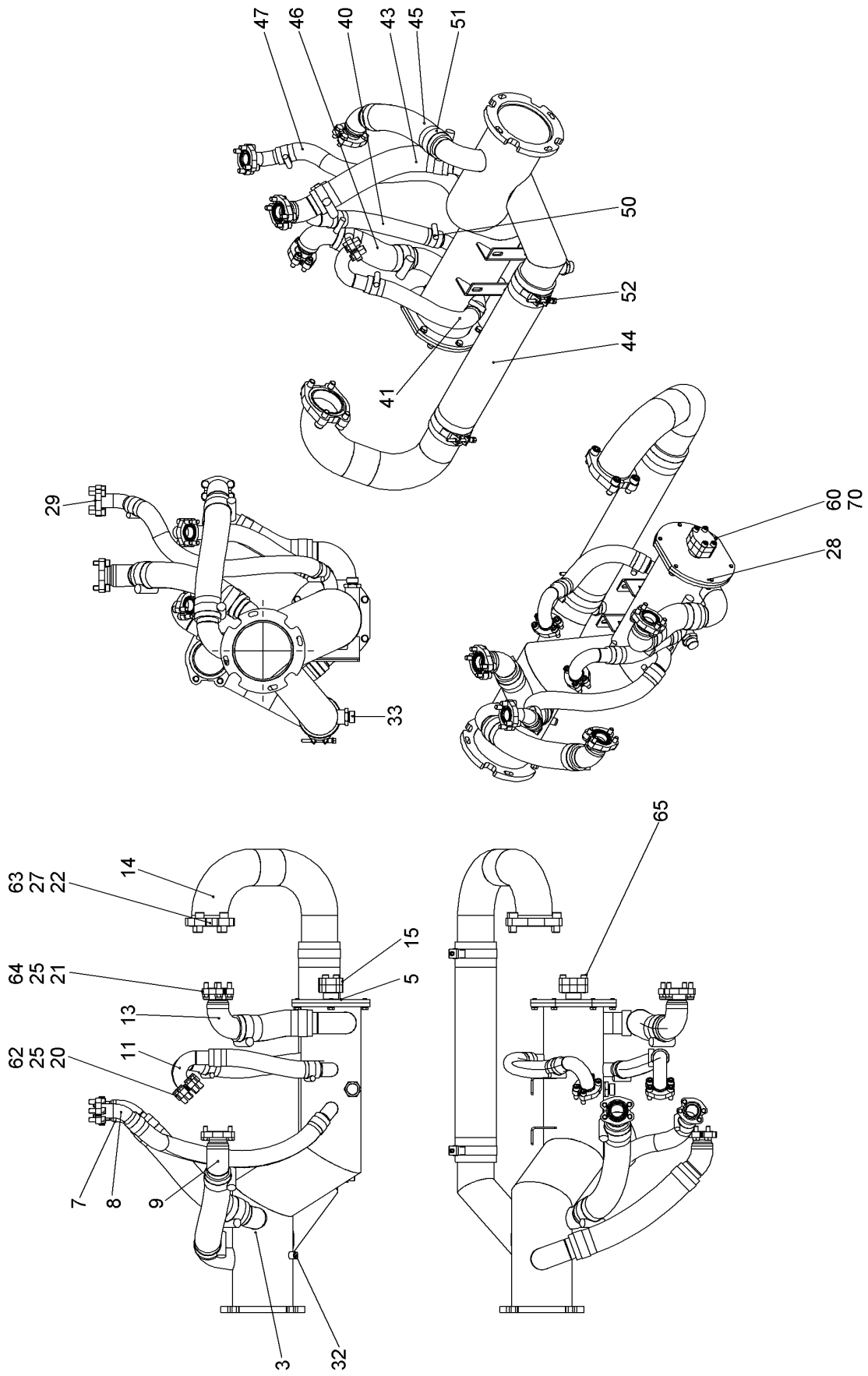

24.5.2017 521094 LIEBHERR	**138376_ETK_001** **INTAKE PIPE OIL CPL** **ANSAUGROHR OEL KPL**	❑ 190 (1/2) **10 57 532 2**

Pos.	Item	Quantity	Description	Bezeichnung	Serie	K
3	10575323	1	SUCTION PIPE OIL ST.CONST.	ANSAUGROHR OEL SCHWK		
5	11217289	1	COVER	DECKEL		
7	592070414	1	INTAKE PIPE CPL	ANSAUGROHR KPL		
8	10598537	1	INTAKE PIPE CPL	ANSAUGROHR KPL		
9	10350932	1	INTAKE PIPE CPL	ANSAUGROHR KPL		
11	10579155	2	INTAKE PIPE CPL	ANSAUGROHR KPL		
13	916526414	1	INTAKE PIPE CPL	ANSAUGROHR KPL		
14	592330814	1	INTAKE PIPE CPL	ANSAUGROHR KPL		
15	11293256	1	SEALING FLANGE SAE	VERSCHLUSSFLANSCH SAE		
20	511502414	6	FLANGE HALF	FLANSCHHAELFTE		
21	510574414	2	FLANGE HALF	FLANSCHHAELFTE		
22	511598114	2	FLANGE HALF	FLANSCHHAELFTE		
25	726431414	2	O-RING	O-RING		
26	510587908	1	O-RING	O-RING		
27	726409714	1	O-RING	O-RING		
28	9177947	1	O-RING	O-RING		
29	726431414	1	O-RING	O-RING		
32	477704914	1	FITTING	VERSCHRAUBUNG		
33	403900714	2	OIL DRAIN PLUG G1"X11 MS	OELABLASSSCHRAUBE		
40	11236517	1	SIPHON PIPE	SAUGSCHLAUCH		
41	11236515	1	SIPHON PIPE	SAUGSCHLAUCH		
43	11236514	1	SIPHON PIPE	SAUGSCHLAUCH		
44	592257814	1	SIPHON PIPE	SAUGSCHLAUCH		
45	11236511	1	SIPHON PIPE	SAUGSCHLAUCH		
46	11236518	1	SIPHON PIPE	SAUGSCHLAUCH		
47	11236513	1	SIPHON PIPE	SAUGSCHLAUCH		
50	10579070	6	HOSE CLAMP	SCHLAUCHSCHELLE		
51	790208814	6	HOSE CLAMP	SCHLAUCHSCHELLE		
52	774256114	2	HOSE CLAMP	SCHLAUCHSCHELLE		
60	406511914	6	HEX SCREW ISO 4017 M10X25 A4-70	SECHSKANTSCHRAUBE		
62	409878214	12	HEX SCREW ASME B18.2.1 UNC 7/16"-14UNC	SECHSKANTSCHRAUBE		
63	10544068	4	SOCKET HEAD SCREW ISO 4762 M16X40 10.9	ZYLINDERSCHRAUBE		
64	409878414	4	HEX SCREW ASME B18.2.1 UNC 1/2"-13UNCX1	SECHSKANTSCHRAUBE		
65	407203008	4	SOCKET HEAD SCREW DIN 6912 M10X40 8.8	ZYLINDERSCHRAUBE		
70	420001114	6	WASHER ISO 7089 10 A4	SCHEIBE		

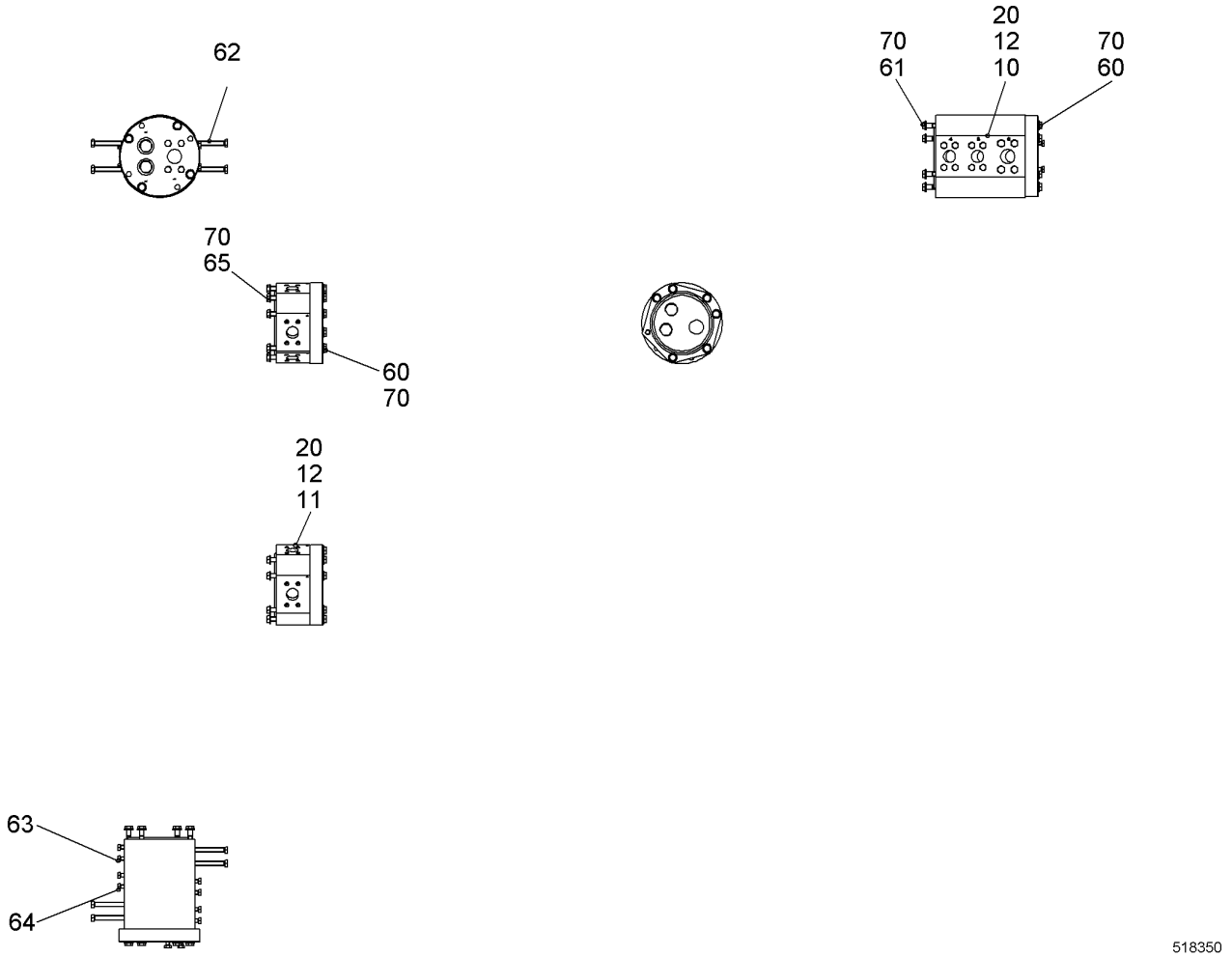

Pos.	Item	Quantity	Description	Bezeichnung	Serie	K
10	953466003	1	INTAKE PIPE	ANSAUGROHR		
12	10595280	2	COVER	DECKEL		
20	726404414	4	O-RING	O-RING		
60	4902260	10	HEX SCREW ISO 4017 M12X55 10.9	SECHSKANTSCHRAUBE		
61	4062009	4	HEX SCREW ISO 4014 M12X50 10.9	SECHSKANTSCHRAUBE		
62	4600385	8	SOCKET HEAD SCREW ISO 4762 M12X100 10.	ZYLINDERSCHRAUBE		
63	4066098	12	HEX SCREW ISO 4017 M10X30 10.9	SECHSKANTSCHRAUBE		
64	4066093	8	HEX SCREW ISO 4017 M10X25 10.9	SECHSKANTSCHRAUBE		
65	4066122	6	HEX SCREW ISO 4017 M12X35 10.9	SECHSKANTSCHRAUBE		
70	4901782	20	WASHER ISO 7089 12 A4	SCHEIBE		

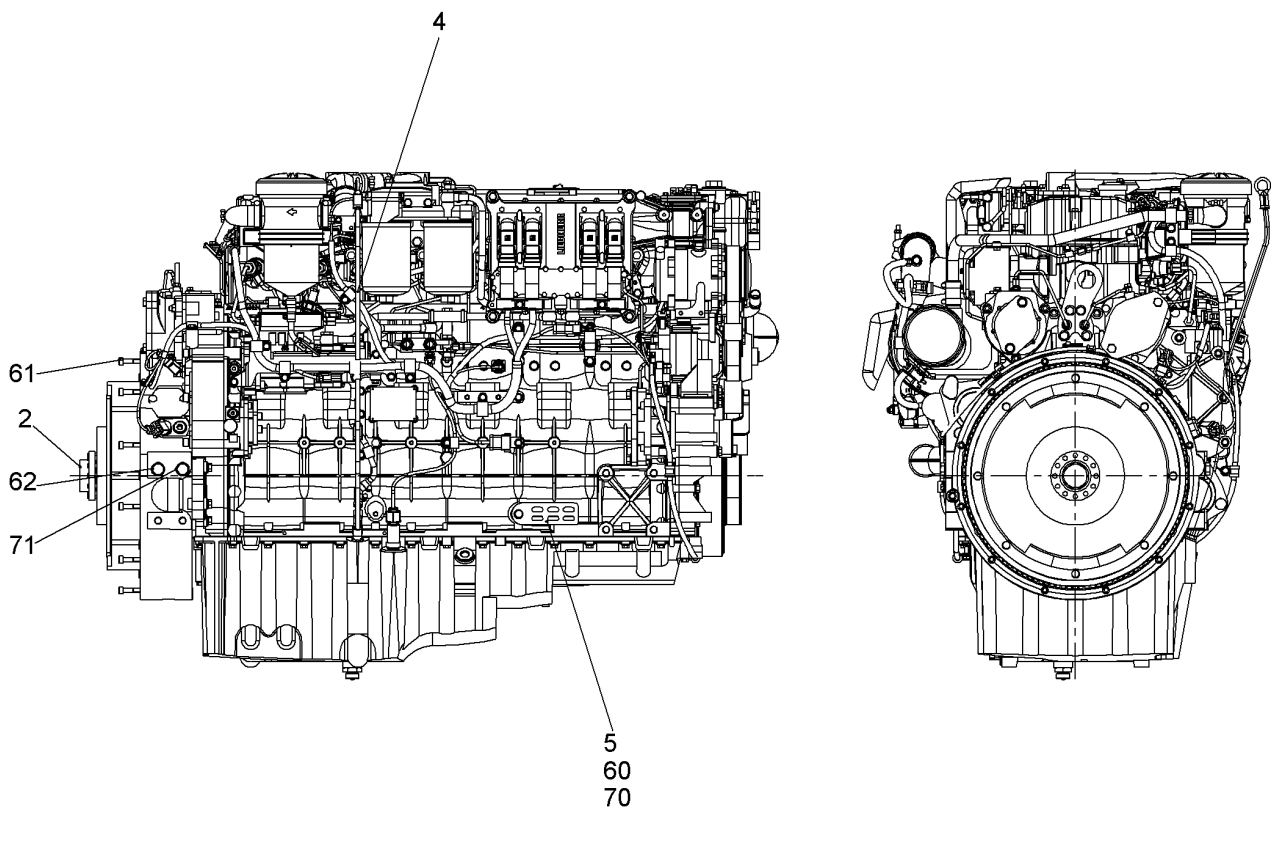

Pos.	Item	Quantity	Description	Bezeichnung	Serie	K
2	11249334	1	COUPLING	KUPPLUNG		
4	10142567	1	OIL DIPSTICK CPL.	OELMESSSTAB KPL.		
5	11261002	2	WP	WP		
60	406511914	1	HEX SCREW ISO 4017 M10X25 A4-70	SECHSKANTSCHRAUBE		
61	4001622	12	SOCKET HEAD SCREW ISO 4762 M10X55 10.9	ZYLINDERSCHRAUBE		
62	10539315	4	HEX SCREW ISO 4017 M16X25 10.9	SECHSKANTSCHRAUBE		
70	10554336	1	WASHER ISO 7089 10 ST	SCHEIBE		
71	4901893	4	WASHER ISO 7089 17/30X3 A4	SCHEIBE		

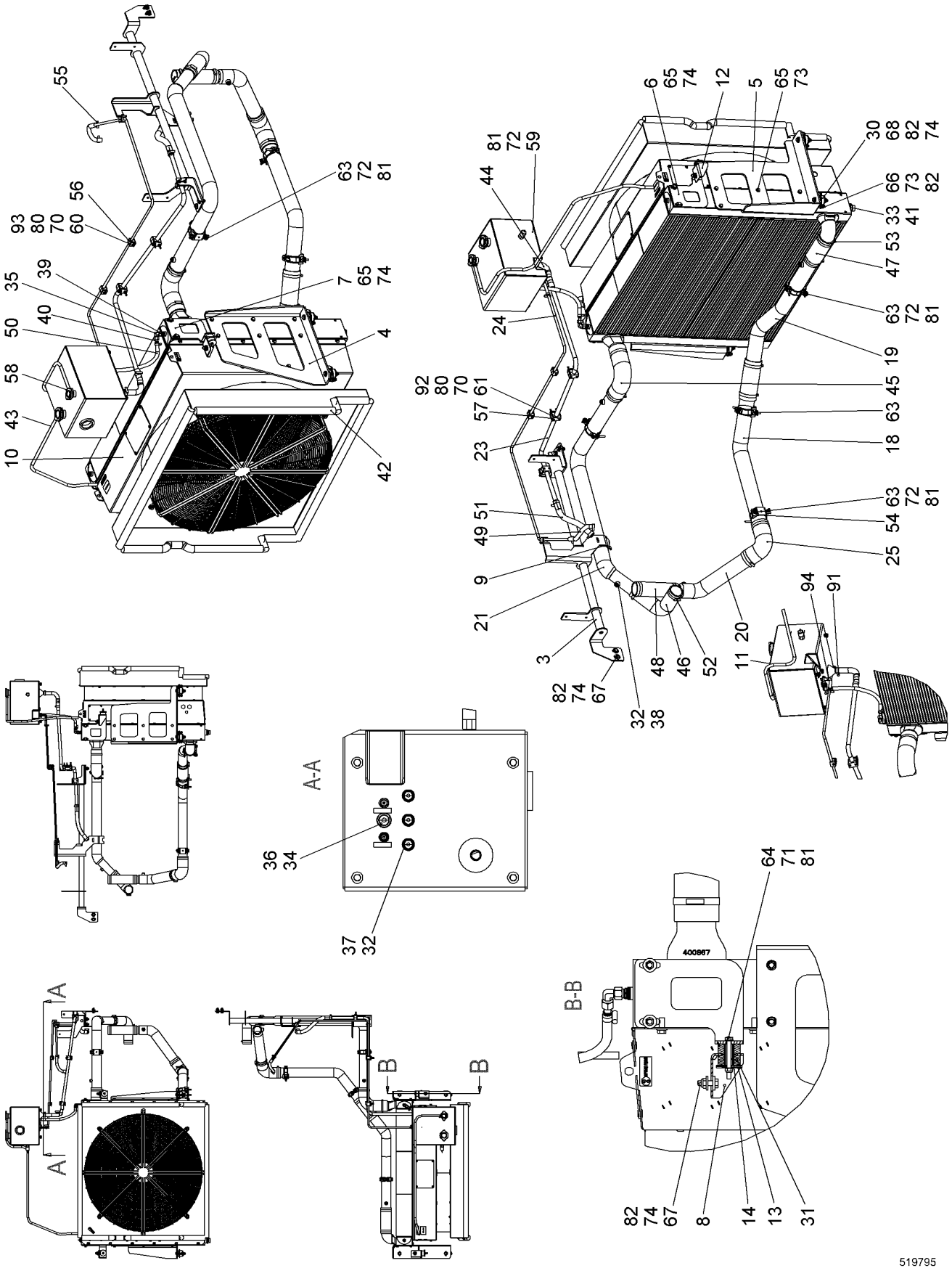
55
56
93
80
70
60
39
35
40
50
58
43
10
63
72
81
7
65
74
4
42
6
65
74
12
5
65
73
30
68
82
74
66
73
82
33
41
53
47
81
72
59
44
24
63
72
81
19
92
80
70
61
57
23
45
63
18
51
49
9
21
3
82
74
67
32
38
48
46
52
11
20
54
25
94
91
A-A
36
34
37
32
A
B
B-B
400867
64
71
81
82
74
67
8
14
13
31
519795

Pos.	Item	Quantity	Description	Bezeichnung	Serie	K
3	11250382	1	HOLDER	HALTER		
4	10575306	1	WP	WP		
5	10575307	1	WP	WP		
6	10599757	1	WP	WP		
7	10599758	1	WP	WP		
8	10599759	1	WP	WP		
9	11269800	1	RUBBER	GUMMI		
10	10574237	1	COOLER MOTOR ⇨ ❑ 197	KUEHLER MOTOR		
11	11287347	1	EQUALIZING RESERVOIR ⇨ ❑ 200	AUSGLEICHSBEHAELTER		
12	10556597	1	HOLDER	HALTER		
13	10567619	2	WASHER 53/10X5 AISI 316	SCHEIBE		
14	10571340	2	SLEEVE 20/13.5X44 AISI 316	HUELSE		
18	11287692	1	COOLING WATER PIPE	KUEHLWASSERROHR		
19	11269259	1	COOLING WATER PIPE	KUEHLWASSERROHR		
20	11250555	1	COOLING WATER PIPE	KUEHLWASSERROHR		
21	11250556	1	COOLING WATER PIPE	KUEHLWASSERROHR		
23	11250564	1	TUBE	ROHR		
24	11287715	1	TUBE	ROHR		
25	11287796	1	FORM HOSE	FORMSCHLAUCH		
30	726613614	4	RUBBER MOUNT	LAGER GUMMI		
31	10567622	4	BUFFER	PUFFER		
32	4900262	7	SEALING RING	DICHTRING		
33	7101022	1	SEALING RING	DICHTRING		
34	710103714	1	SEALING RING	DICHTRING		
35	247117702	1	FITTING	VERSCHRAUBUNG		
36	470905214	1	FITTING	VERSCHRAUBUNG		
37	470905714	3	FITTING	VERSCHRAUBUNG		
38	477704914	4	FITTING	VERSCHRAUBUNG		
39	476608008	1	FITTING	VERSCHRAUBUNG		
40	511713914	1	HOSE UNION	SCHLAUCHSTUTZEN		
41	403900714	1	OIL DRAIN PLUG G1"X11 MS	OELABLASSSCHRAUBE		
42	7014524	5	CLAMPING PROFILE	KLEMMPROFIL		
43	510559314	2.5	HYDRAULIC HOSE	HYDRAULIKSCHLAUCH		
44	11270026	1	FORM HOSE	FORMSCHLAUCH		
45	10337090	1	FORM HOSE	FORMSCHLAUCH		
46	10350439	1	FORM HOSE	FORMSCHLAUCH		
47	11656331	1	COOLING WATER HOSE	KUEHLWASSERSCHLAUCH		
48	11621777	1	COOLING WATER HOSE	KUEHLWASSERSCHLAUCH		
49	11621769	1	COOLING WATER HOSE	KUEHLWASSERSCHLAUCH		
50	11621769	1	COOLING WATER HOSE	KUEHLWASSERSCHLAUCH		
51	11621772	1	COOLING WATER HOSE	KUEHLWASSERSCHLAUCH		
52	774206408	4	HOSE CLAMP	SCHLAUCHSCHELLE		
53	774218808	9	HOSE CLAMP	SCHLAUCHSCHELLE		
54	774255714	4	CLAMP	SCHELLE		
55	774204914	6	HOSE CLAMP	SCHLAUCHSCHELLE		
56	7365090	6	CLAMP-HALF	KLEMMHAELFTE		
57	602008508	6	CLAMP-HALF	KLEMMHAELFTE		
58	10581765	1	HOSE CLAMP	SCHLAUCHSCHELLE		
59	406501514	6	HEX SCREW ISO 4017 M8X16 A4-70	SECHSKANTSCHRAUBE		
60	404251014	3	SOCKET HEAD SCREW ISO 4762 M6X35 A4-7	ZYLINDERSCHRAUBE		
61	404251414	6	SOCKET HEAD SCREW ISO 4762 M6X60 A4-7	ZYLINDERSCHRAUBE		
63	406501314	8	HEX SCREW ISO 4017 M8X30 A4-70	SECHSKANTSCHRAUBE		
64	10538809	2	HEX SCREW ISO 4017 M8X80 A4-70	SECHSKANTSCHRAUBE		
65	406511914	16	HEX SCREW ISO 4017 M10X25 A4-70	SECHSKANTSCHRAUBE		
66	406511614	8	HEX SCREW ISO 4017 M10X30 A4-70	SECHSKANTSCHRAUBE		
67	406509314	6	HEX SCREW ISO 4017 M10X35 A4-70	SECHSKANTSCHRAUBE		
68	406527914	4	HEX SCREW ISO 4017 M10X80 A4-70	SECHSKANTSCHRAUBE		
70	4000648	9	WASHER DIN 7349 6.4	SCHEIBE		

Pos.	Item	Quantity	Description	Bezeichnung	Serie	K
71	420001014	6	WASHER ISO 7089 8 A4	SCHEIBE		
72	421300514	20	WASHER DIN 6340 8.4 C35	SCHEIBE		
73	420001114	28	WASHER ISO 7089 10 A4	SCHEIBE		
74	421300214	24	WASHER DIN 6340 10.5 C35	SCHEIBE		
80	10540492	9	HEX NUT ISO 10511 M6 A4	SECHSKANTMUTTER		
81	10540493	12	HEX NUT ISO 10511 M8 A4	SECHSKANTMUTTER		
82	10540494	18	HEX NUT ISO 10511 M10 A4	SECHSKANTMUTTER		
91	4900778	4	HOSE CLAMP	SCHLAUCHSCHELLE		
92	7005053	3	LID PLATE	DECKPLATTE		
93	602025814	3	LID PLATE	DECKPLATTE		
94	550936214	1	FORM HOSE	FORMSCHLAUCH		

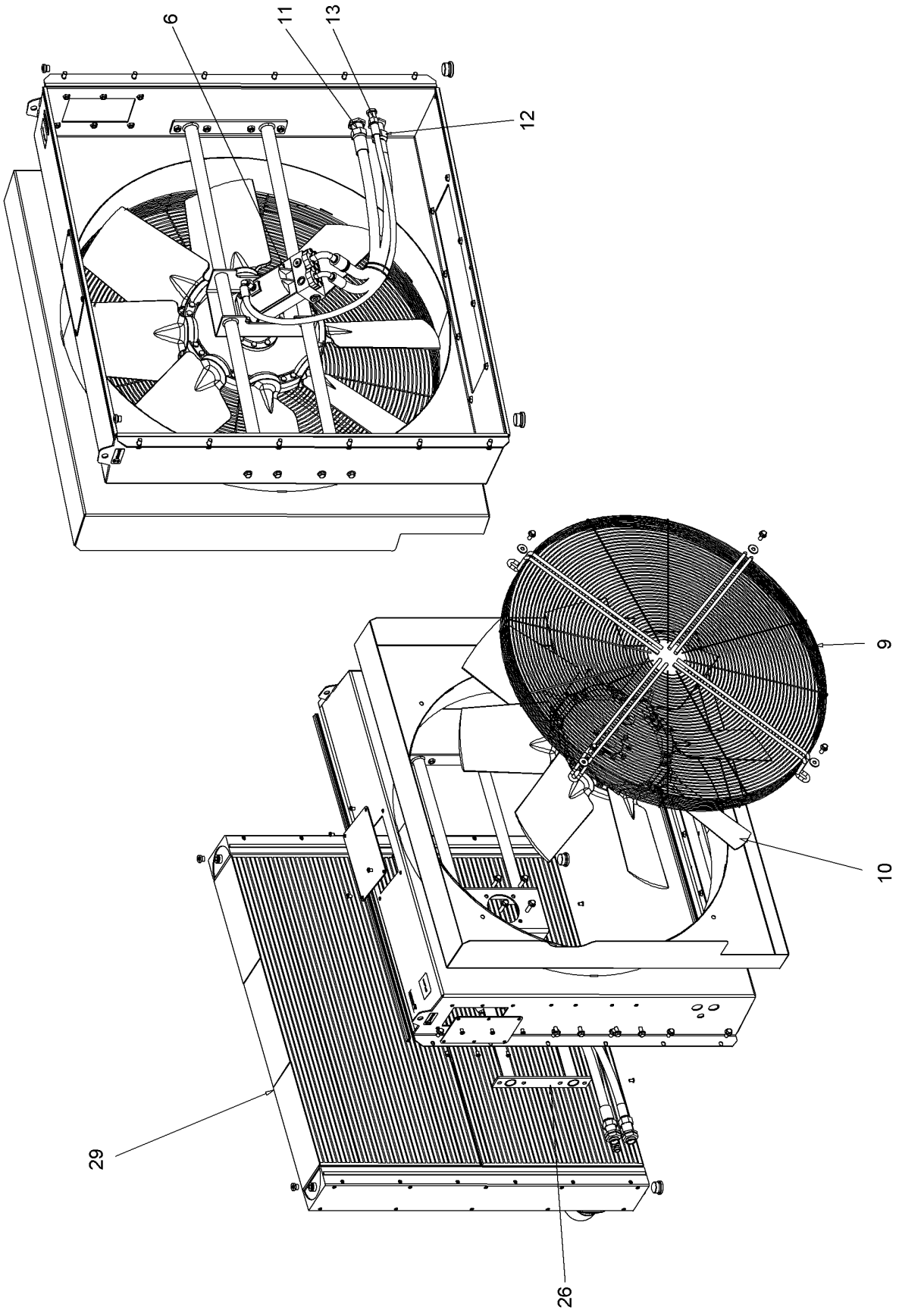
6
11
13
12
9
10
29
26
607278

Pos.	Item	Quantity	Description	Bezeichnung	Serie	K
6	512250114	1	OIL MOTOR ⇨ ❑ 199	OELMOTOR		
9	11267554	1	GUARD	SCHUTZGITTER		
10	11267555	1	FAN	LUEFTER		
11	11267556	1	HOSE CPL	SCHLAUCH KPL		
12	11267557	1	HOSE CPL	SCHLAUCH KPL		
13	11267558	1	HOSE CPL	SCHLAUCH KPL		
26	11267559	1	MOTOR HOLDER	MOTORHALTER		
29	11267560	1	COOLER	KUEHLER		

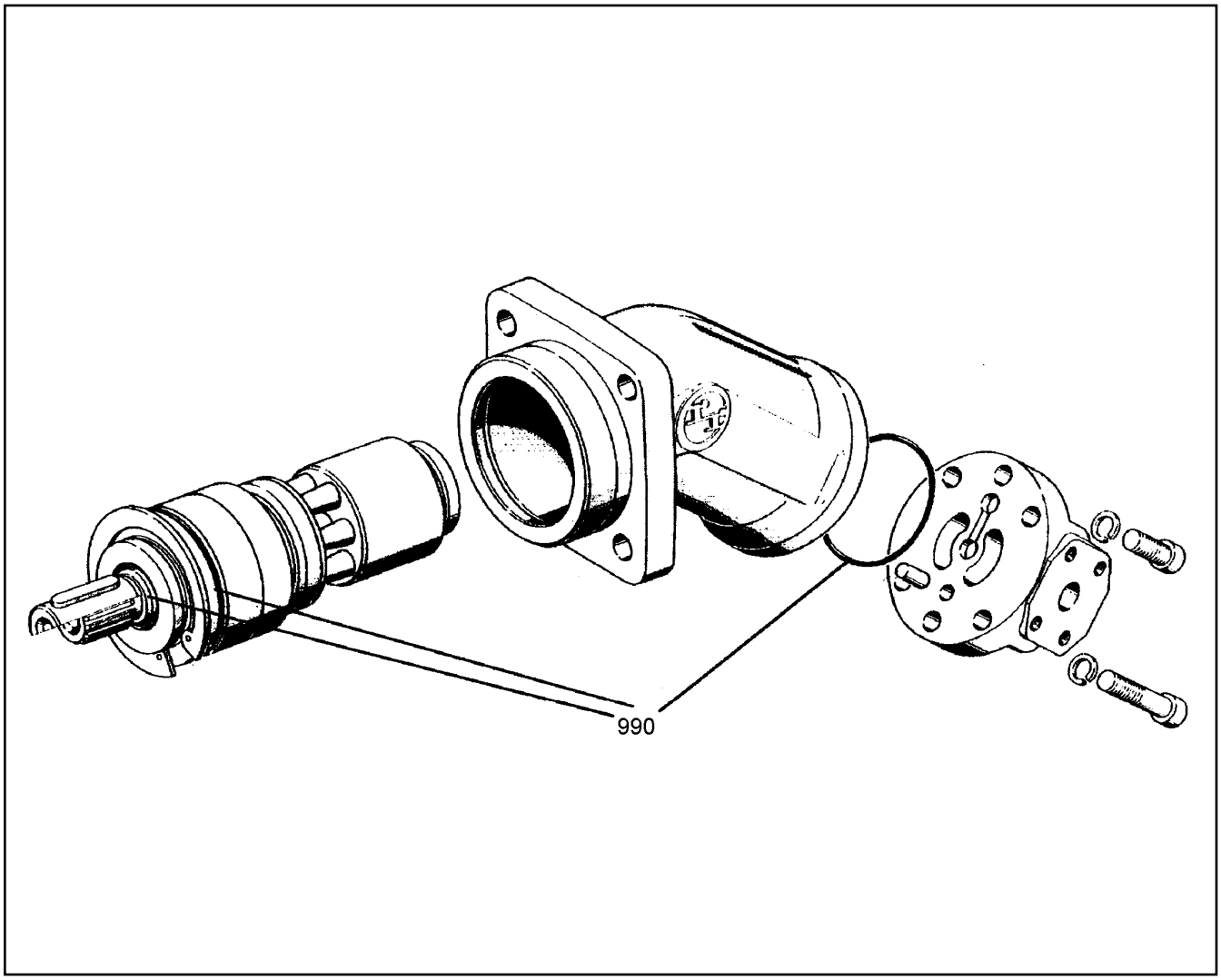

Pos.	Item	Quantity	Description	Bezeichnung	Serie	K
990	502050814	1	SEALING SET CPL	DS KPL		

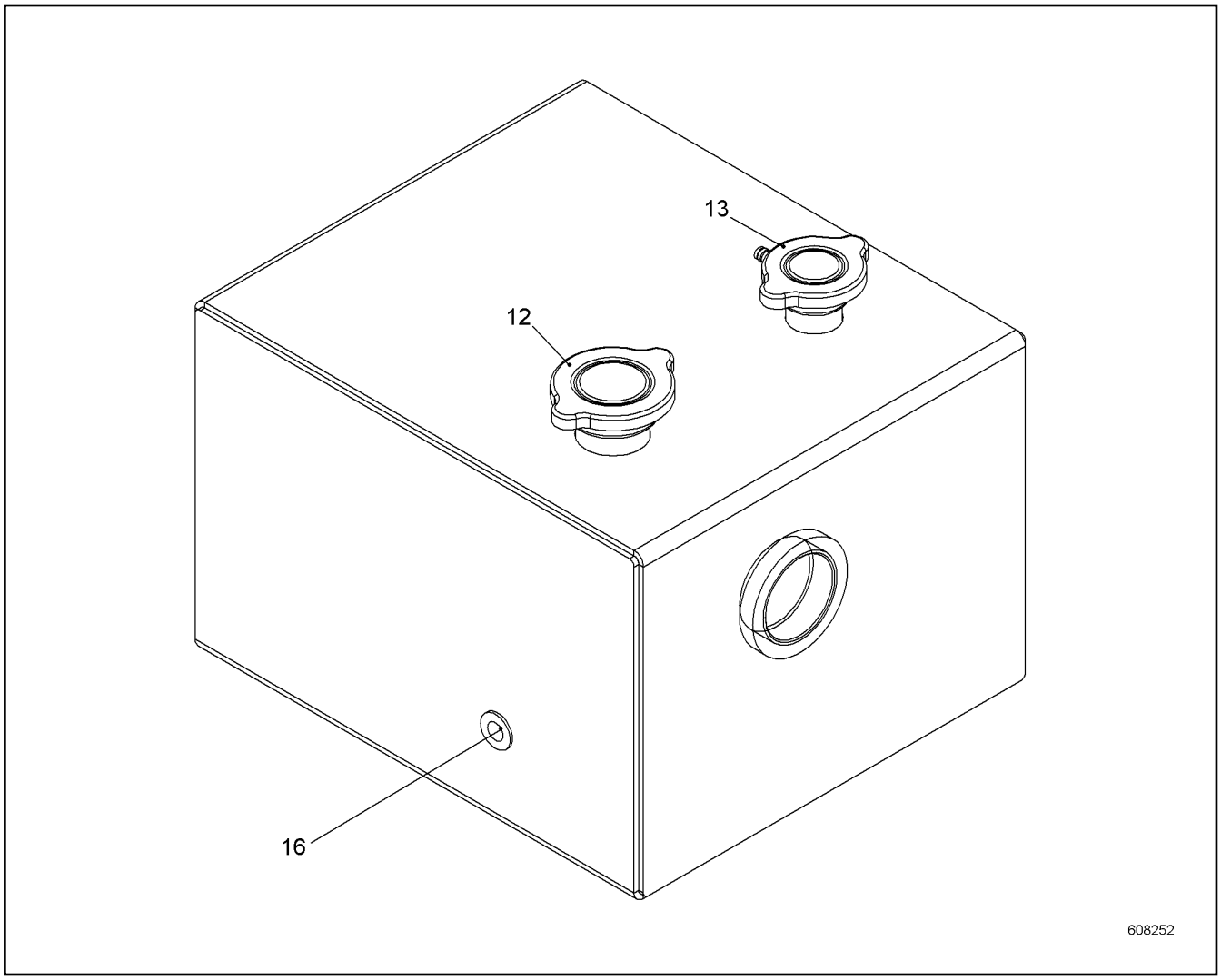

Pos.	Item	Quantity	Description	Bezeichnung	Serie	K
12	11241269	1	END COVER	VERSCHLUSSDECKEL		
13	10599796	1	END COVER	VERSCHLUSSDECKEL		
16	11287761	1	OIL LEVEL SIGHT GLASS	OELSCHAUGLAS		

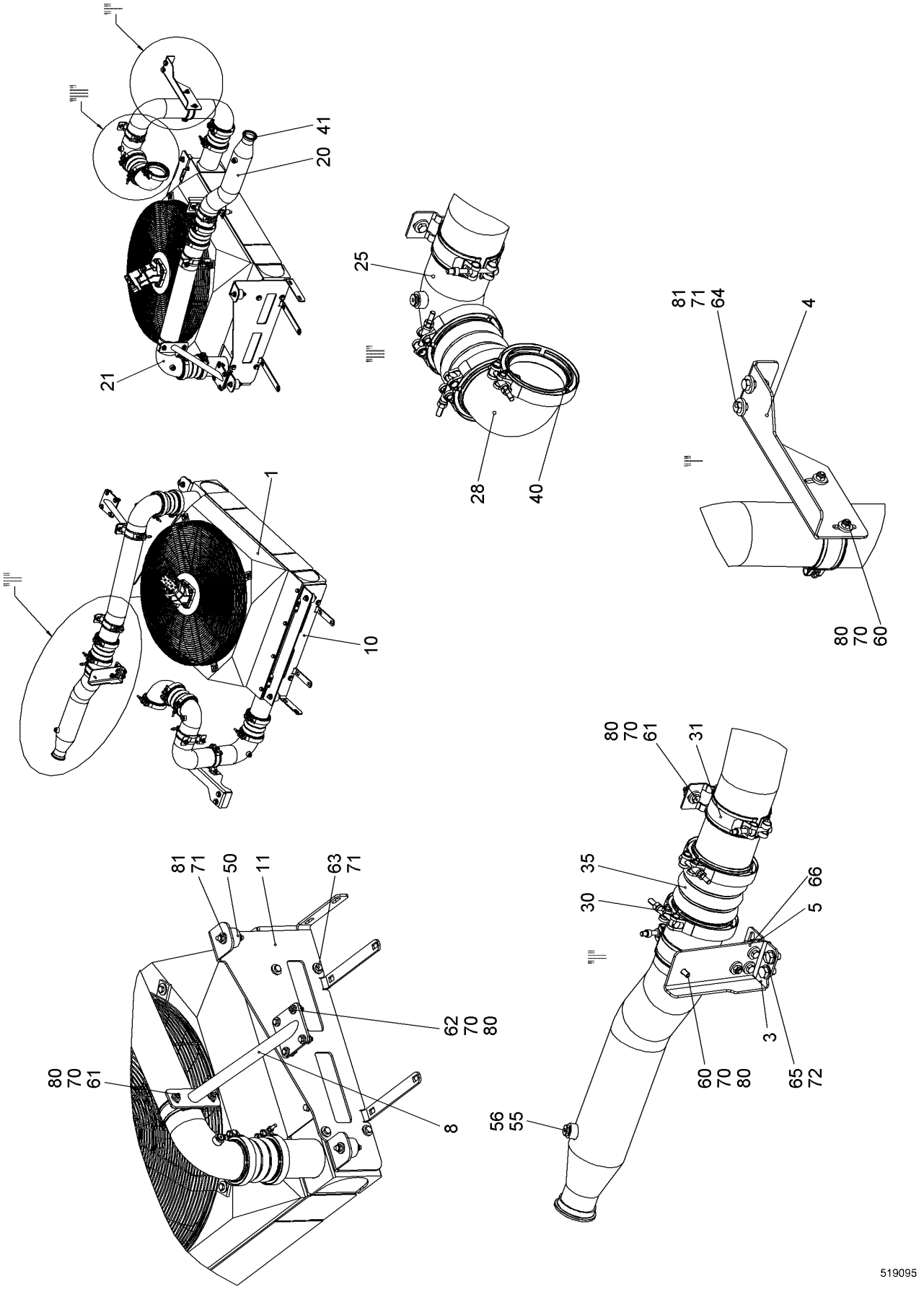

24.5.2017 519095	**138376_ETK_001**	201 (1/2)
LIEBHERR	**COOLER INSTALLATION CHARGE AIR** **KUEHLER EINBAU LADELUFT**	**11 24 114 1**

Pos.	Item	Quantity	Description	Bezeichnung	Serie	K
1	10574239	1	COOLER MOTOR ⇨ ❑ 203	KUEHLER MOTOR		
3	11285747	1	WP ⇨ ❑ 205	WP		
5	11276612	1	SLEEVE 14/25X26 S235JRH;EN 10210-1	HUELSE		
8	11251056	1	HOLDER	HALTER		
10	10575566	1	WP	WP		
11	10575567	1	WP	WP		
20	11250430	1	CHARGE AIR PIPE	LADELUFTROHR		
21	11250438	1	CHARGE AIR PIPE	LADELUFTROHR		
25	11250439	1	CHARGE AIR PIPE	LADELUFTROHR		
28	10562107	1	CHARGE AIR PIPE	LADELUFTROHR		
30	10127984	9	RETAINER CLIP	SPANNSCHELLE		
31	10513605	5	CLAMP	SCHELLE		
35	10521397	4	CHARGE AIR CORRUGATED HOSE	LADELUFTWELLSCHLAUCH		
40	7380605	1	O-RING	O-RING		
41	7380970	1	O-RING	O-RING		
50	726612114	4	RUBBER MOUNT	LAGER GUMMI		
55	10598295	4	SCREW PLUG	VERSCHLUSSSCHRAUBE		
56	710102514	4	SEALING RING	DICHTRING		
60	406501414	4	HEX SCREW ISO 4017 M8X25 A4-70	SECHSKANTSCHRAUBE		
61	406501314	6	HEX SCREW ISO 4017 M8X30 A4-70	SECHSKANTSCHRAUBE		
62	406517614	4	HEX SCREW ISO 4017 M8X35 A4-70	SECHSKANTSCHRAUBE		
63	406511914	8	HEX SCREW ISO 4017 M10X25 A4-70	SECHSKANTSCHRAUBE		
64	406509314	2	HEX SCREW ISO 4017 M10X35 A4-70	SECHSKANTSCHRAUBE		
65	406517714	2	HEX SCREW ISO 4017 M12X20 A4-70	SECHSKANTSCHRAUBE		
66	406512614	1	HEX SCREW ISO 4017 M12X50 A4-70	SECHSKANTSCHRAUBE		
70	421300514	28	WASHER DIN 6340 8.4 C35	SCHEIBE		
71	421300214	22	WASHER DIN 6340 10.5 C35	SCHEIBE		
72	4901782	3	WASHER ISO 7089 12 A4	SCHEIBE		
80	10540493	14	HEX NUT ISO 10511 M8 A4	SECHSKANTMUTTER		
81	10540494	10	HEX NUT ISO 10511 M10 A4	SECHSKANTMUTTER		

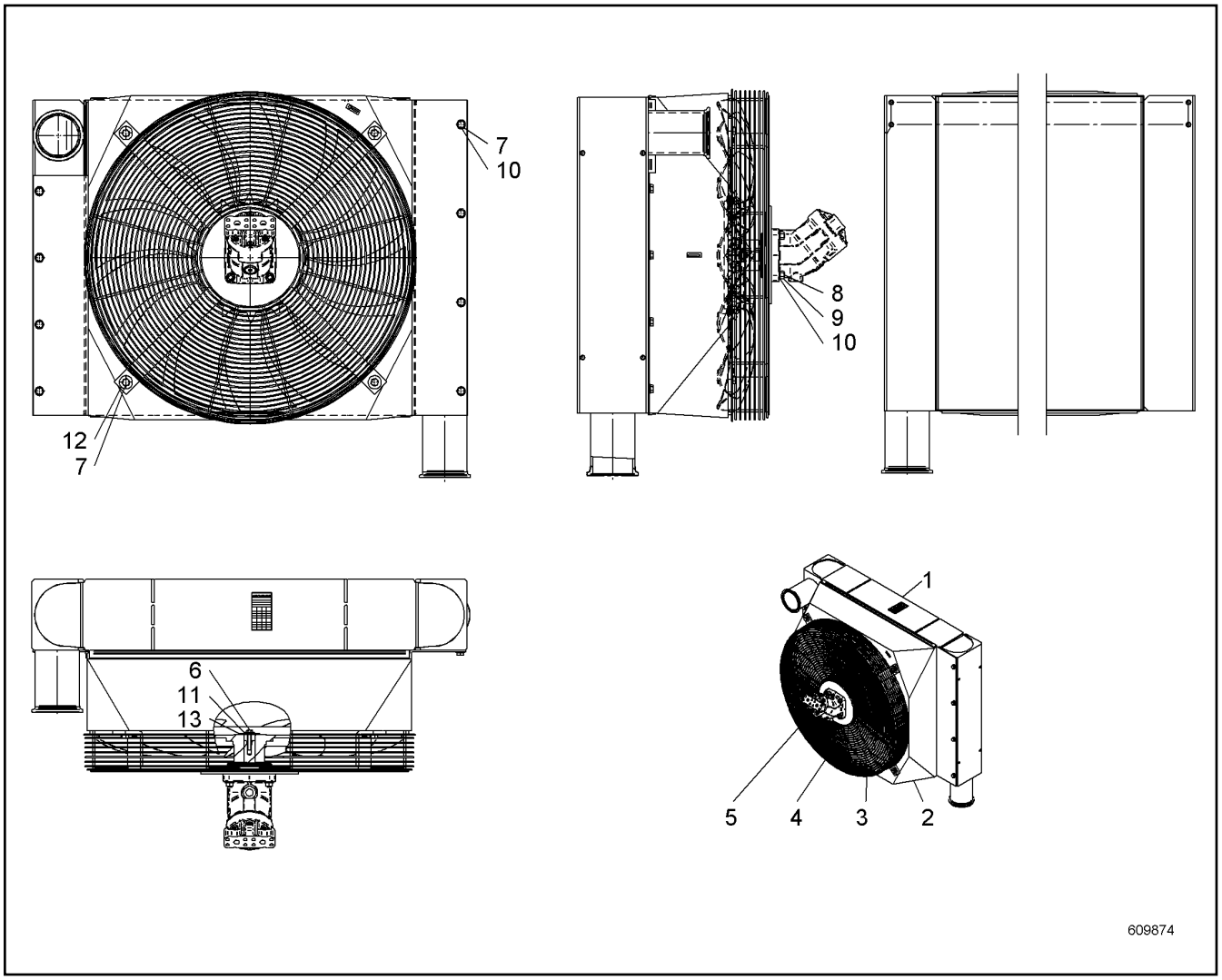

Pos.	Item	Quantity	Description	Bezeichnung	Serie	K
1	11932246	1	CHARGE AIR COOLER	LADELUFTKUEHLER		
2	11932245	1	FAN COWL	LUEFTERHAUBE		
3	11932244	1	GUARD	SCHUTZGITTER		
4	11932243	1	FAN	LUEFTER		
5	512239414	1	OIL MOTOR ⇨ ❑ 204	OELMOTOR		
6	11932242	1	HEX SCREW ISO 4017 M8X40 8.8	SECHSKANTSCHRAUBE		
7	11932241	12	HEX SCREW ISO 4017 M10X25 10.9	SECHSKANTSCHRAUBE		
8	11932240	4	HEX SCREW ISO 4017 M10X40 10.9	SECHSKANTSCHRAUBE		
9	11932239	4	HEX NUT ISO 4032 M10 8.8	SECHSKANTMUTTER		
10	11932238	16	WASHER ISO 7089 10	SCHEIBE		
11	11932237	1	WASHER ISO 7093-1 8	SCHEIBE		
12	11932236	4	WASHER ISO 7093-1 10	SCHEIBE		
13	11922654	1	WASHER	SCHEIBE		

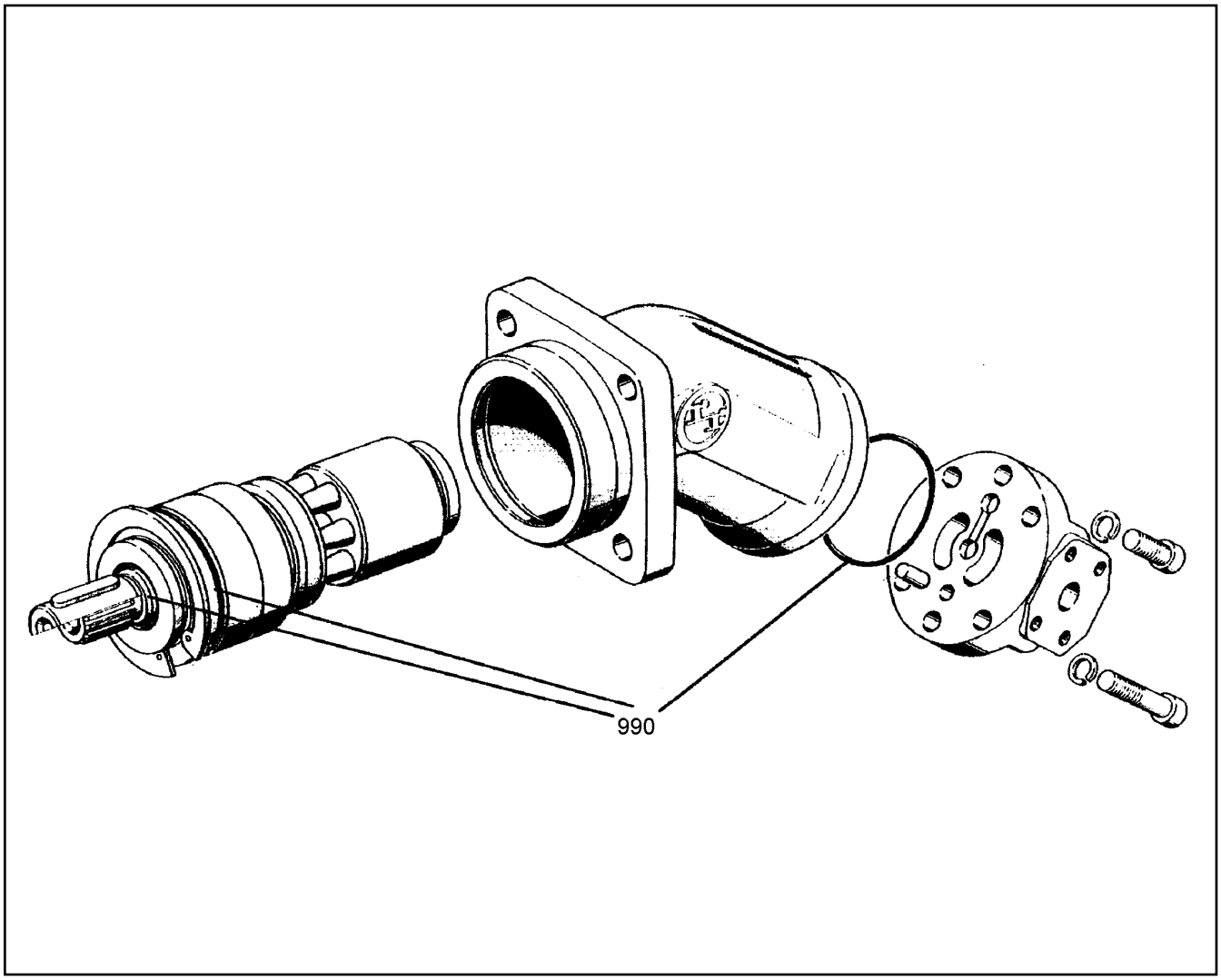

Pos.	Item	Quantity	Description	Bezeichnung	Serie	K
990	502050814	1	SEALING SET CPL	DS KPL		

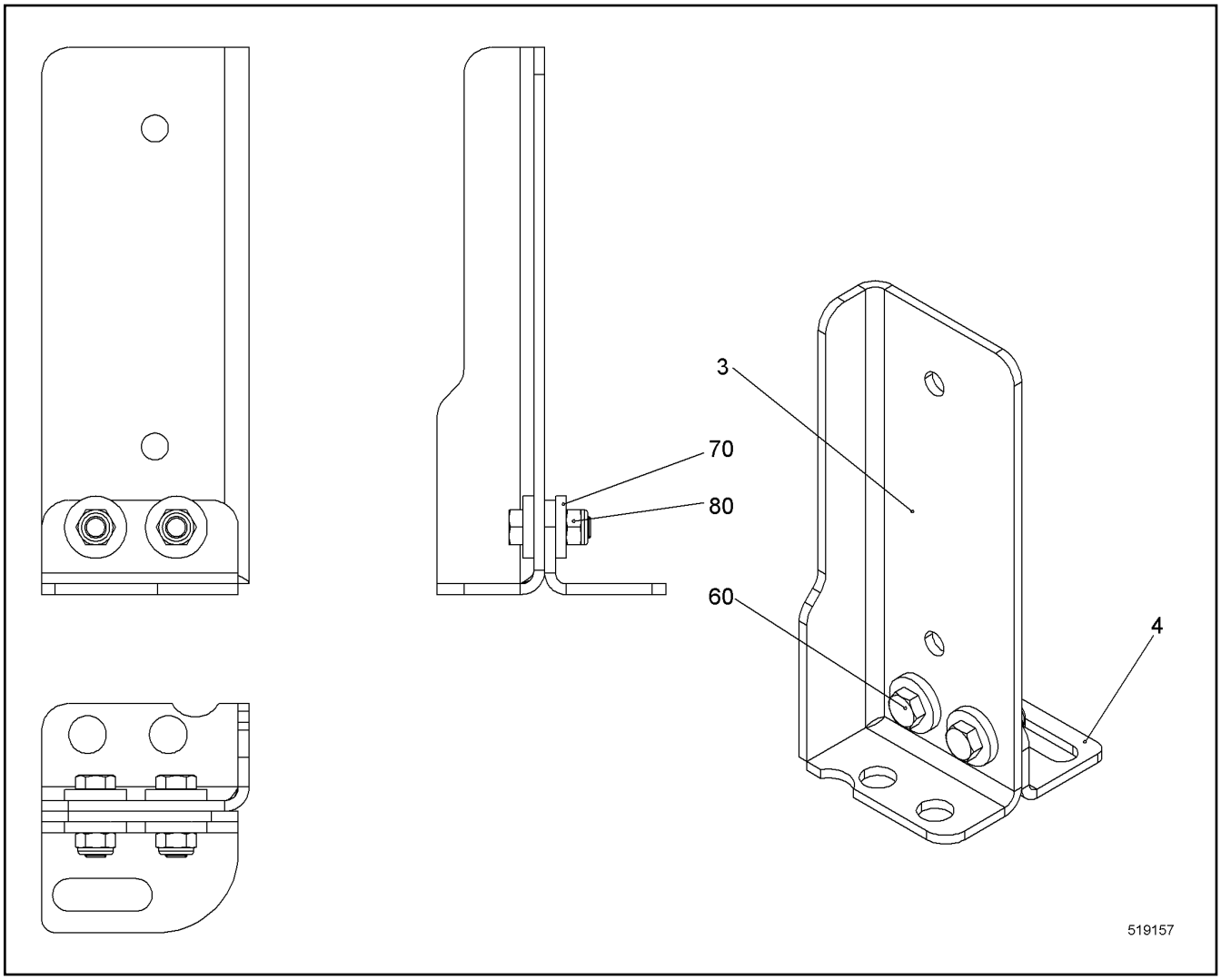

Pos.	Item	Quantity	Description	Bezeichnung	Serie	K
3	11250985	1	WP	WP		
4	11285709	1	WP	WP		
60	406501414	2	HEX SCREW ISO 4017 M8X25 A4-70	SECHSKANTSCHRAUBE		
70	421300514	4	WASHER DIN 6340 8.4 C35	SCHEIBE		
80	10540493	2	HEX NUT ISO 10511 M8 A4	SECHSKANTMUTTER		

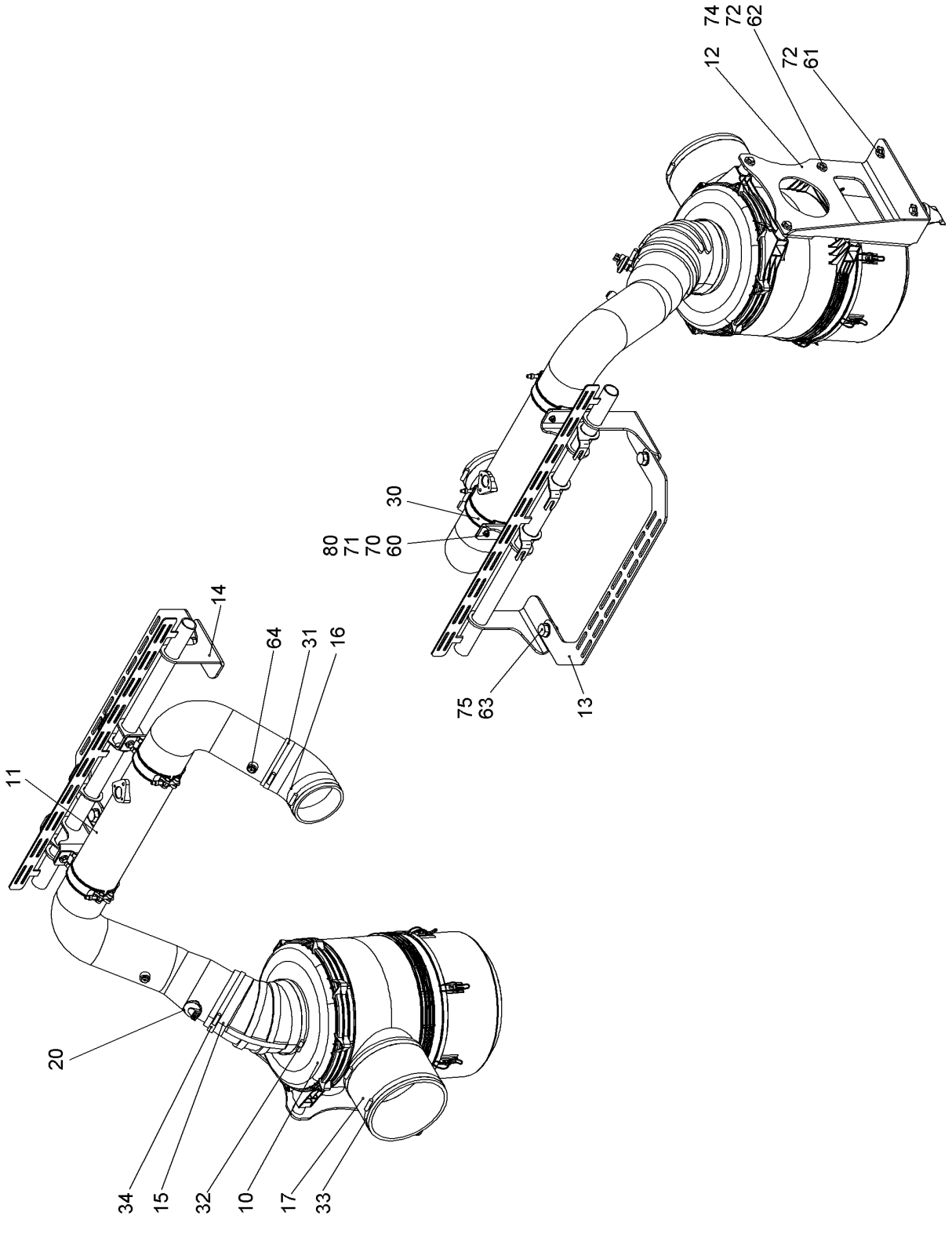
74
72
62
12
72
61
30
80
71
70
60
14
64
31
16
11
75
63
13
20
34
15
32
10
17
33
519096

Pos.	Item	Quantity	Description	Bezeichnung	Serie	K
10	11246790	1	AIR FILTER ⇨ ❑ 208	LUFTFILTER		
11	11247162	1	SUCTION PIPE AIR	ANSAUGROHR LUFT		
12	11247208	1	CONSOLE	KONSOLE		
13	11215385	1	CONSOLE	KONSOLE		
14	11247880	1	HOLDER ST.CONST.	HALTER SCHWK		
15	11246836	1	FORM HOSE	FORMSCHLAUCH		
16	550789808	1	ELBOW	KRUEMMER		
17	10352453	1	HOSE	SCHLAUCH		
20	11060522	1	MAINTENANCE SWITCH	WARTUNGSSCHALTER		
30	11229805	2	CLAMP	SCHELLE		
31	774209908	2	HOSE CLAMP	SCHLAUCHSCHELLE		
32	774241914	1	HOSE CLAMP	SCHLAUCHSCHELLE		
33	774247214	2	HOSE CLAMP	SCHLAUCHSCHELLE		
34	774217108	1	HOSE CLAMP	SCHLAUCHSCHELLE		
60	406501414	4	HEX SCREW ISO 4017 M8X25 A4-70	SECHSKANTSCHRAUBE		
61	406518714	2	HEX SCREW ISO 4017 M10X20 A4-70	SECHSKANTSCHRAUBE		
62	10538823	4	HEX SCREW ISO 4017 M10X65 A4-70	SECHSKANTSCHRAUBE		
63	10543919	2	HEX SCREW ISO 4017 M20X35 10.9	SECHSKANTSCHRAUBE		
64	477704914	2	FITTING	VERSCHRAUBUNG		
70	420001014	4	WASHER ISO 7089 8 A4	SCHEIBE		
71	421300514	4	WASHER DIN 6340 8.4 C35	SCHEIBE		
72	421300214	6	WASHER DIN 6340 10.5 C35	SCHEIBE		
74	10519789	4	WASHER 12/30X30 S355J2;EN 10025-2	SCHEIBE		
75	10544174	2	WASHER ISO 7089 20	SCHEIBE		
80	10540493	4	HEX NUT ISO 10511 M8 A4	SECHSKANTMUTTER		

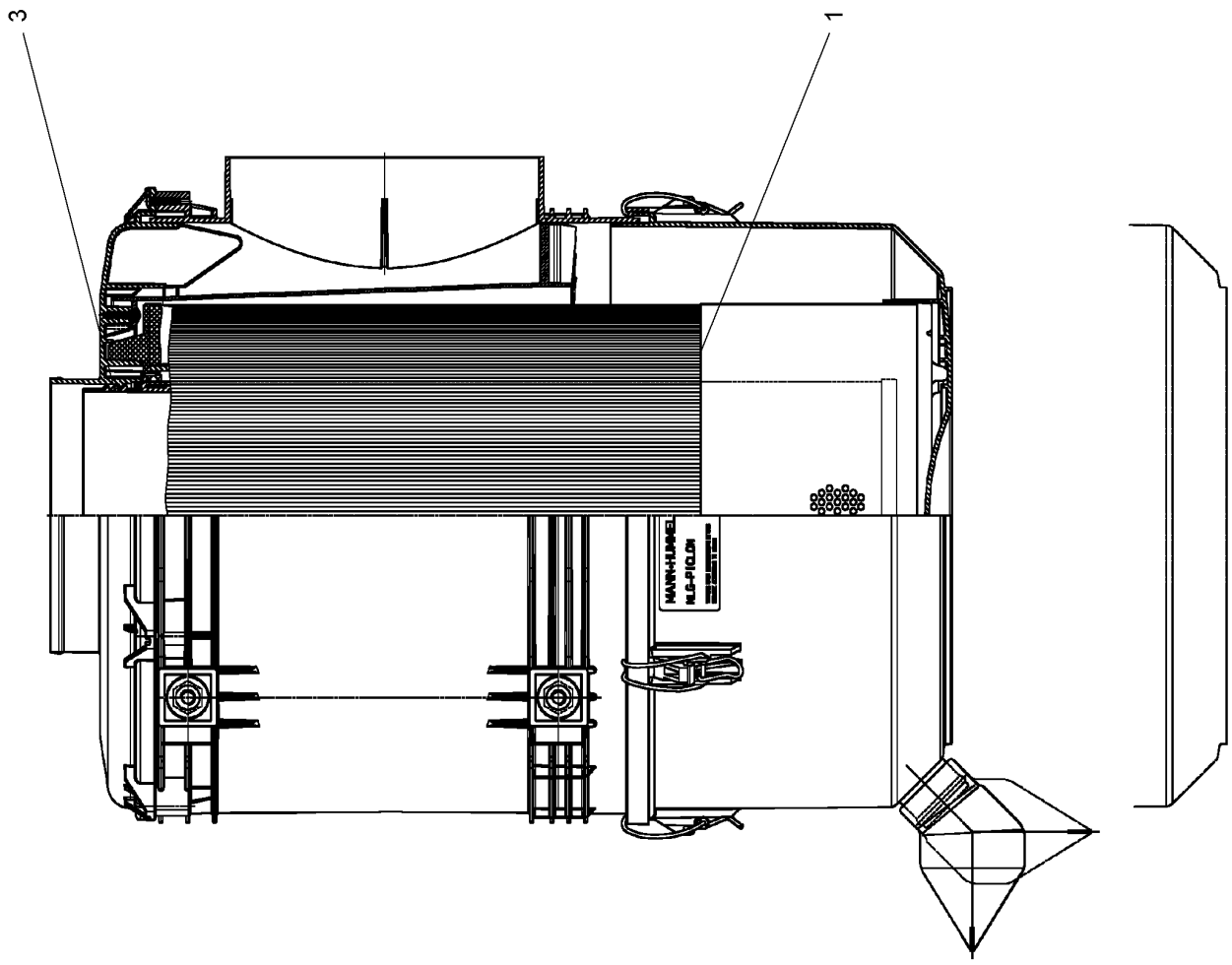

608021

Pos.	Item	Quantity	Description	Bezeichnung	Serie	K
1	11291031	1	FILTER ELEMENT	FILTERELEMENT		
3	11291030	1	SAFETY ELEMENT	SICHERHEITSELEMENT		

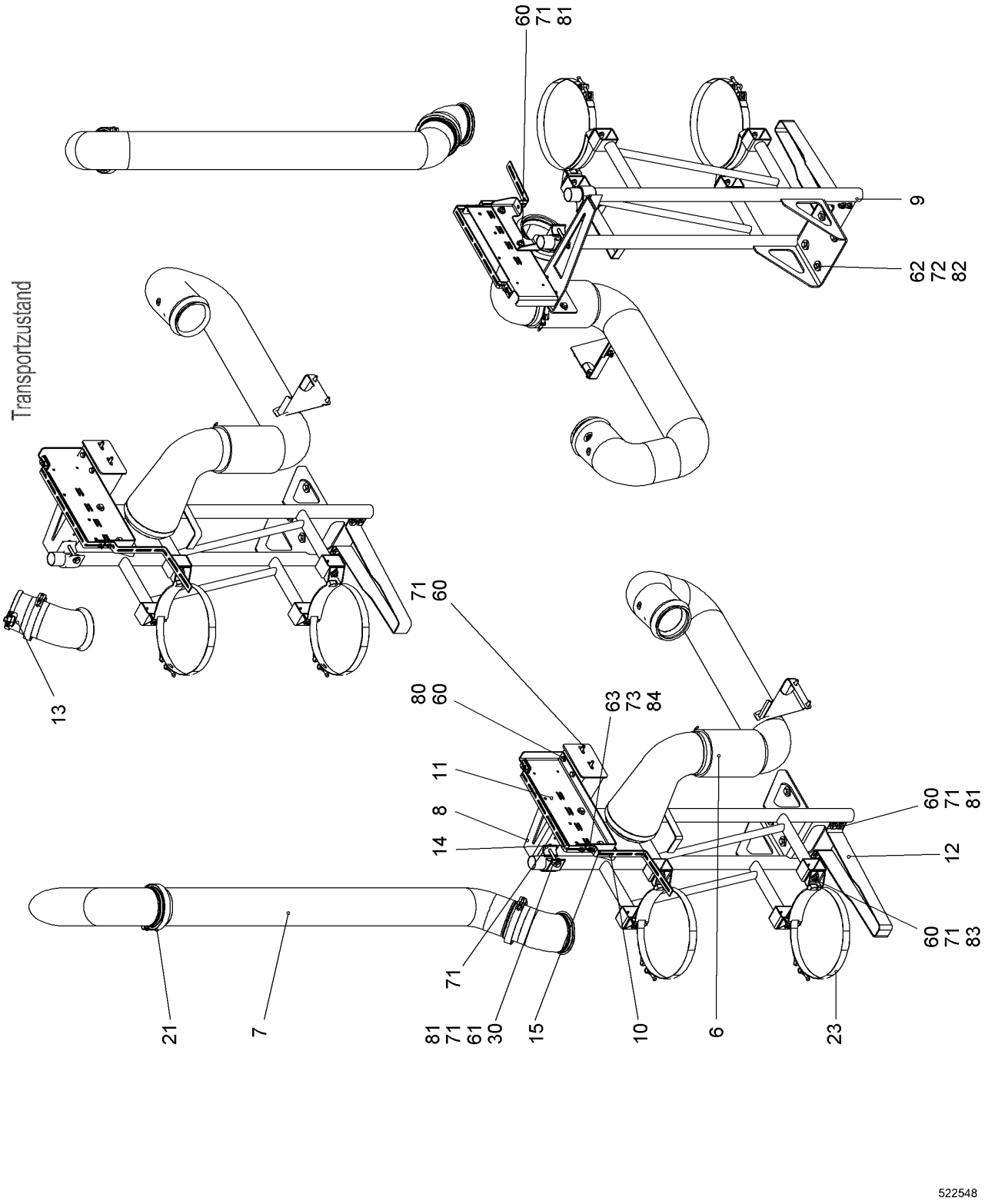
Transportzustand
60
71
81
9
62
72
82
13
71
60
80
60
63
73
84
11
8
14
60
71
81
12
60
71
83
21
7
71
81
71
61
30
15
10
6
23
522548

Pos.	Item	Quantity	Description	Bezeichnung	Serie	K
6	11248166	1	FLUE GAS PIPE CPL	ABGASROHR KPL		
7	11248175	1	EXHAUST TAIL PIPE	ABGASENDROHR		
8	11247607	1	CONSOLE	KONSOLE		
9	11247464	1	CONSOLE	KONSOLE		
10	11248432	1	WP	WP		
11	11248433	1	WP	WP		
12	11248460	1	BRACKET	BUEGEL		
13	11299163	1	EXHAUST FLAP	AUSPUFFKLAPPE		
14	11308593	1	BRACKET	BUEGEL		
15	11308594	1	BRACKET	BUEGEL		
21	10494116	2	PROFIL CLAMP	PROFILSCHELLE		
23	10355006	2	SWIVEL BOLT BRACKET CLAMP	GELENKBANDKONSOLENSCHE		
30	979896808	2	CLAMPING RING	KLEMMRING		
60	406511614	14	HEX SCREW ISO 4017 M10X30 A4-70	SECHSKANTSCHRAUBE		
61	10538824	2	HEX SCREW ISO 4017 M10X110 A4-70	SECHSKANTSCHRAUBE		
62	406519214	4	HEX SCREW ISO 4017 M12X45 A4-70	SECHSKANTSCHRAUBE		
63	406518514	3	HEX SCREW ISO 4017 M6X25 A4-70	SECHSKANTSCHRAUBE		
71	421300214	28	WASHER DIN 6340 10.5 C35	SCHEIBE		
72	4635283	8	WASHER DIN 6340 13 ST	SCHEIBE		
73	10540500	6	WASHER ISO 7093-1 6 A4	SCHEIBE		
80	10540494	2	HEX NUT ISO 10511 M10 A4	SECHSKANTMUTTER		
81	411514614	8	HEX NUT ISO 4032 M10 A4-70	SECHSKANTMUTTER		
82	10540495	4	HEX NUT ISO 10511 M12 A4	SECHSKANTMUTTER		
83	411880614	4	HEX NUT ISO 7042 M10 8	SECHSKANTMUTTER		
84	10540492	3	HEX NUT ISO 10511 M6 A4	SECHSKANTMUTTER		

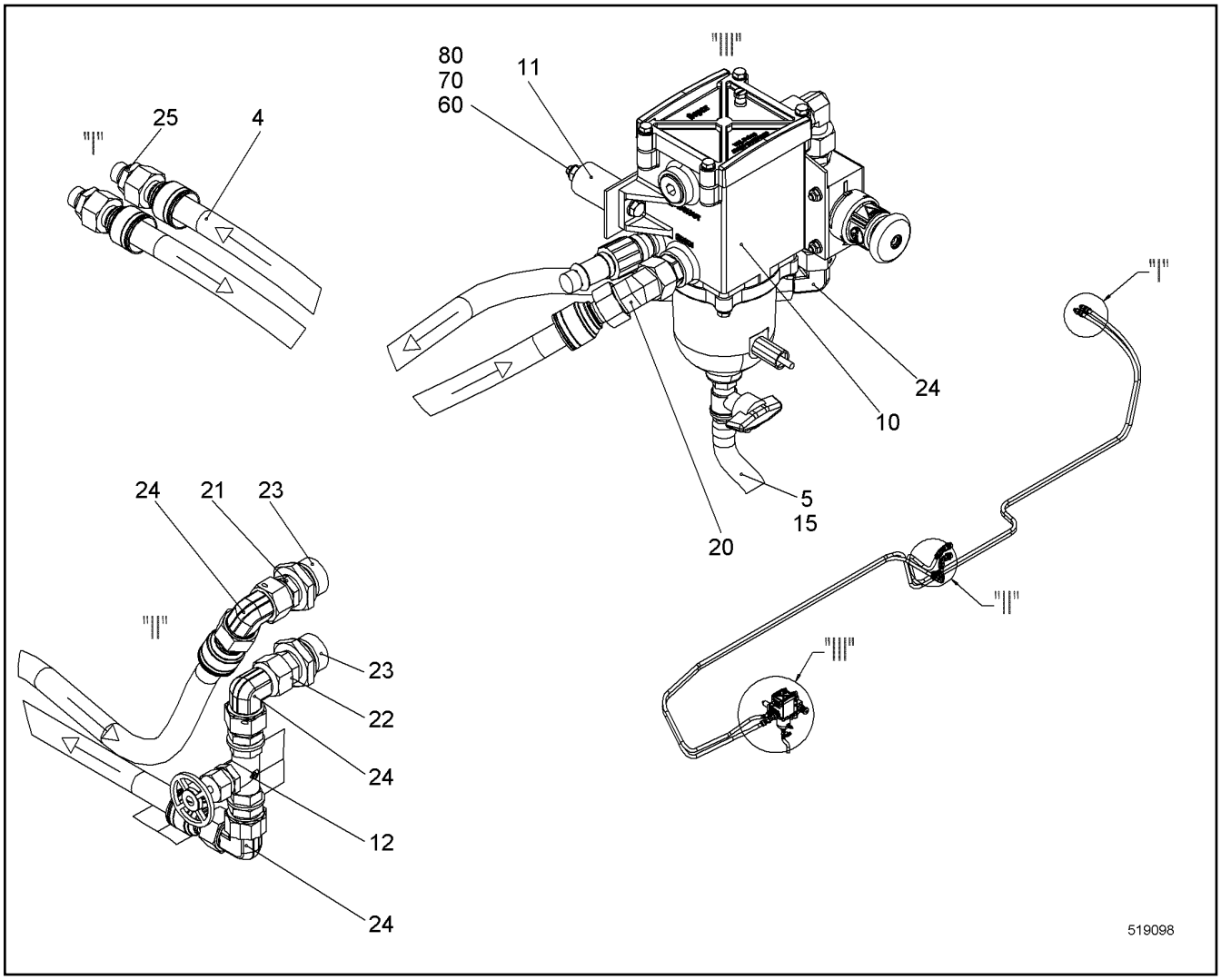

Pos.	Item	Quantity	Description	Bezeichnung	Serie	K
4	11249729	1	HOSE LIST ⇨ ❑ 213	SCHLAUCHLISTE		
5	11621769	0.5	COOLING WATER HOSE	KUEHLWASSERSCHLAUCH		
10	10550911	1	ADD-ON PRELIMINARY FUEL FILTER ⇨ ❑ 214	KRAFTSTOFFVORFILTER ANBAU		
11	11249738	2	WASHER 10/30X50 S355J2;EN 10025-2	SCHEIBE		
12	7402781	1	THROUGH-VALVE	DURCHGANGSVENTIL		
15	774204914	1	HOSE CLAMP	SCHLAUCHSCHELLE		
20	10035314	1	FITTING	VERSCHRAUBUNG		
21	247009702	1	FITTING	VERSCHRAUBUNG		
22	247011602	1	FITTING	VERSCHRAUBUNG		
23	247043102	2	FITTING	VERSCHRAUBUNG		
24	247108302	4	FITTING	VERSCHRAUBUNG		
25	471034714	2	FITTING	VERSCHRAUBUNG		
60	10538809	2	HEX SCREW ISO 4017 M8X80 A4-70	SECHSKANTSCHRAUBE		
70	420001014	4	WASHER ISO 7089 8 A4	SCHEIBE		
80	10540493	2	HEX NUT ISO 10511 M8 A4	SECHSKANTMUTTER		

ACHTUNG !
ATTENTION !
ATTENTION !
ATENCIÓN !
ATENÇÃO !
ВНИМАНИЕ

Für Schlauchbestellungen kann über die Schlauchnummer, in der entsprechenden Schlauchliste, die Identnummer festgestellt werden.

For ordering flexible hoses you can find the identification number through the hose-number in the corresponding hose-list.

Pour des ordres de tuyau flexible le nombre d'identification on voit dans la liste de tuyau flexible correspondente.

Para el pedido de manguera, indicar el número de identificación de la manguera de la lista respectiva.

Para se encomendar uma mangueira, consulte o número de identificaçao na respectiva lista de mangueiras.

Для оформления заказов на шланги/рукавы идент. № может быть определен при помощи номера шланга/рукава, указанного в соотетствующем перечне шлангов/рукавов.

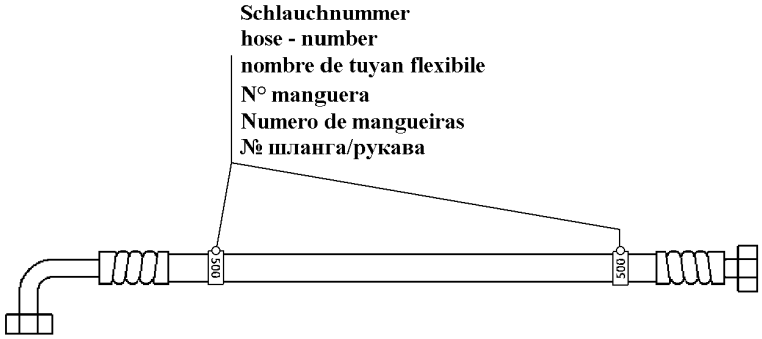

500000

Pos.	Item	Quantity	Description	Bezeichnung	Serie	K
800	928130914	1	HOSE CPL	SCHLAUCH KPL		
801	928130914	1	HOSE CPL	SCHLAUCH KPL		
803	996779714	1	HOSE CPL	SCHLAUCH KPL		

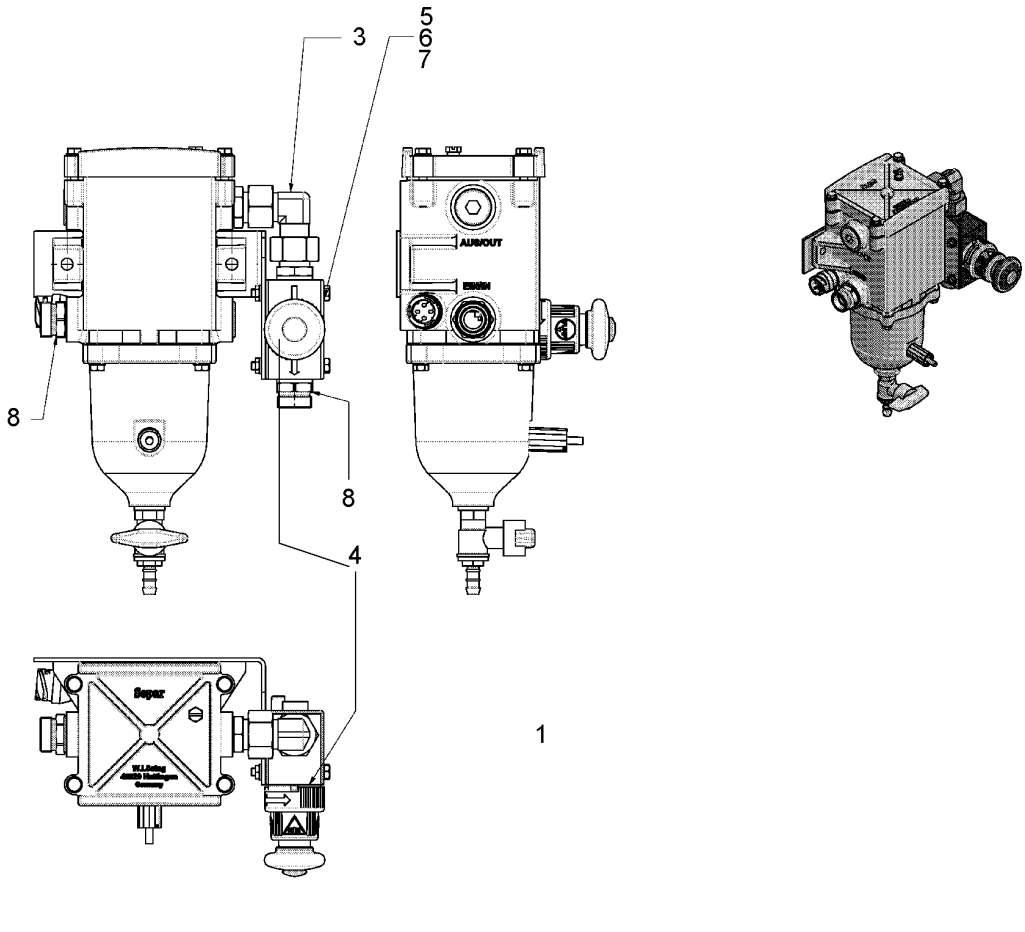

Pos.	Item	Quantity	Description	Bezeichnung	Serie	K
1	10303007	1	FUEL PREFILTER ⇨ ❑ 215	KRAFTSTOFFVORFILTER		
3	11229464	1	FITTING	VERSCHRAUBUNG		
4	10129218	1	MANUAL VENTILATION PUMP	HANDENTLUEFTUNGSPUMPE		
5	11219069	2	SOCKET HEAD SCREW M5X55	ZYLINDERSCHRAUBE		
6	11219056	2	LOCK NUT DIN 985	SICHERUNGSMUTTER		
7	11219067	2	WASHER ISO 7089	SCHEIBE		
8	11067653	2	FITTING	VERSCHRAUBUNG		

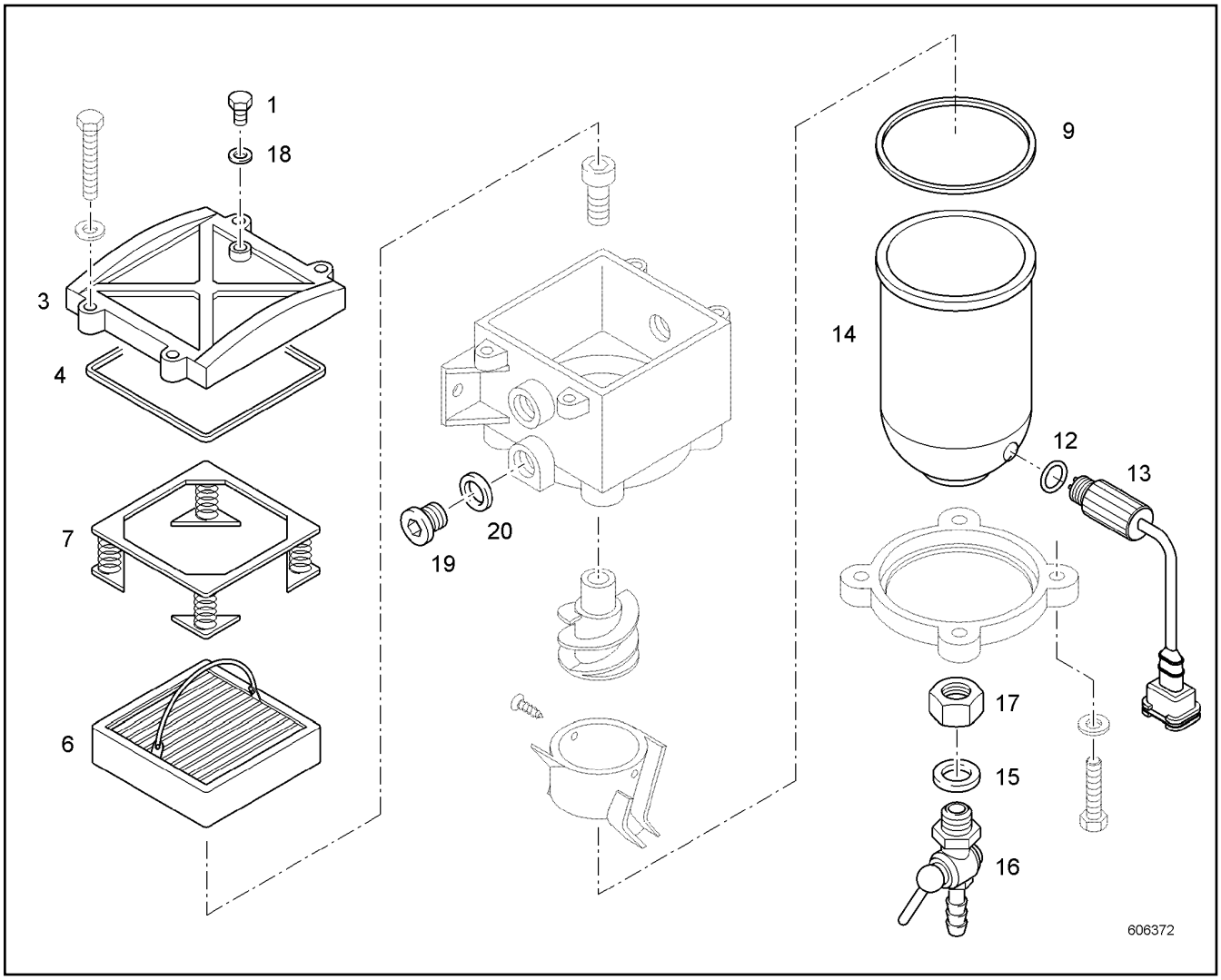

Pos.	Item	Quantity	Description	Bezeichnung	Serie	K
1	7412942	1	VENTILATION SCREW	ENTLUEFTUNGSSCHRAUBE		
3	7027755	1	COVER	DECKEL		
4	10294171	1	SEAL	DICHTUNG		
6	553183708	1	FILTER ELEMENT	FILTERELEMENT		
7	10032001	1	SPRING ELEMENT	FEDERELEMENT		
9	10294170	1	BOWLEN SEALING	BOWLENDICHTUNG		
12	7380986	1	O-RING	O-RING		
13	10331335	1	WATER SENSOR	WASSERSONDE		
14	10331395	1	BOWL	BOWLE		
15	7412937	1	O-RING	O-RING		
16	11696074	1	DRAIN TAP	ABLASSHAHN		
17	11005554	1	TWO-HOLE NUT AL	ZWEILOCHMUTTER		
18	7412935	1	SEAL	DICHTUNG		
19	10340236	2	SCREW PLUG M22X1.5	VERSCHLUSSSCHRAUBE		
20	10340226	2	O-RING	O-RING		

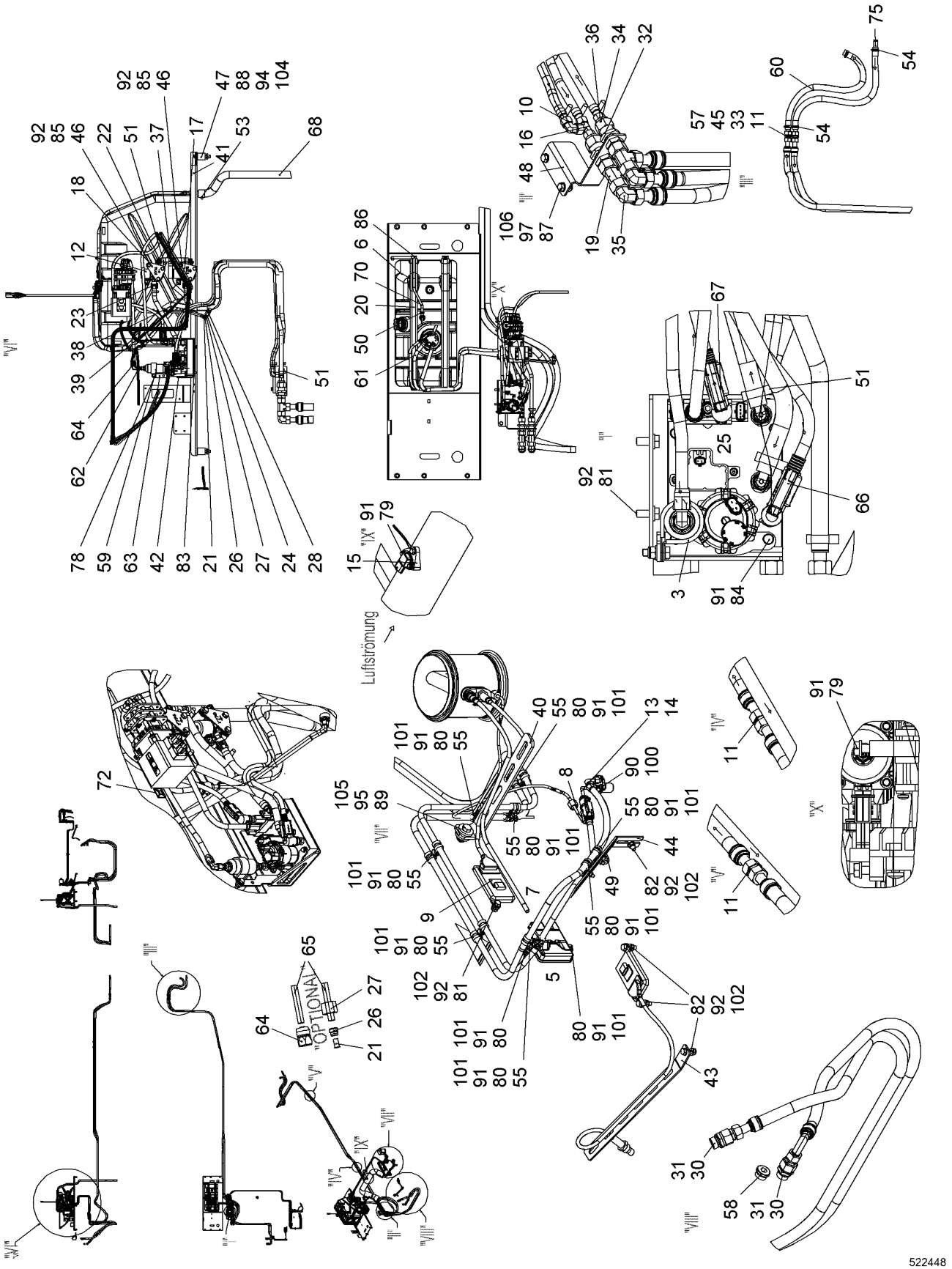

24.5.2017 522448	**138376_ETK_001**	❑ 216 (1/3)
LIEBHERR	**ASSEMBLY INSTAL.** **ANLAGE HARNSTOFF EINBAU**	**11 24 114 5**

Pos.	Item	Quantity	Description	Bezeichnung	Serie	K
3	11373478	1	PUMP	PUMPE		
4	12433536	1	COMPRESSOR	KOMPRESSOR		
5	10144039	1	CONTROL GEAR	STEUERGERAET		
6	11242408	1	UREA CONTAINER ⇨ ❑ 219	HARNSTOFFBEHAELTER		
7	10144038	1	SENSOR	SENSOR		
8	11349182	2	TEMPERATURE SENSOR	TEMPERATURSENSOR		
9	11008787	2	SENSOR	SENSOR		
10	247117702	1	FITTING	VERSCHRAUBUNG		
11	247000902	4	FITTING	VERSCHRAUBUNG		
12	11082158	2	WATER VALVE	WASSERVENTIL		
13	10144093	1	INJECTOR CPL.	INJEKTOR KPL.		
14	10144861	1	SEAL	DICHTUNG		
15	10141261	1	MOISTURE SENSOR	FEUCHTESENSOR		
16	247128602	1	FITTING	VERSCHRAUBUNG		
17	11274707	1	SIGN	SCHILD		
18	11274708	1	SIGN	SCHILD		
19	247138602	2	FITTING	VERSCHRAUBUNG		
20	10581173	2	TIGHTENING STRAP HINGE PIN	GELENKBOLZENSPANNBAND		
21	10871759	6	PLUG-IN SLEEVE	EINSTECKHUELSE		
22	11082454	2	PLUG COUPLING	STECKKUPPLUNG		
23	10678754	2	PLUG COUPLING	STECKKUPPLUNG		
24	10663840	4	FITTING	VERSCHRAUBUNG		
25	11482007	4	PLUG COUPLING	STECKKUPPLUNG		
26	11926906	5	FITTING	VERSCHRAUBUNG		
27	10816957	5	BOX NUT M14X1.5 AISI 316 TI	UEBERWURFMUTTER		
28	11926905	1	FITTING	VERSCHRAUBUNG		
30	247041502	2	FITTING	VERSCHRAUBUNG		
31	471031508	2	FITTING	VERSCHRAUBUNG		
32	247027302	2	FITTING	VERSCHRAUBUNG		
33	247049002	2	FITTING	VERSCHRAUBUNG		
34	247040902	2	FITTING	VERSCHRAUBUNG		
35	247126202	2	FITTING	VERSCHRAUBUNG		
36	511713914	3	HOSE UNION	SCHLAUCHSTUTZEN		
37	553087814	1	TEE	T-STUECK		
38	11821872	1	FUEL FILTER	KRAFTSTOFFFILTER		
39	11823326	2	HOSE CLAMP	SCHLAUCHSCHELLE		
40	10577229	1	WP	WP		
41	10579806	1	HOLDER ST.CONST.	HALTER SCHWK		
42	11242757	1	HOLDER	HALTER		
43	11279013	1	WP	WP		
44	11279036	1	BRACKET	BUEGEL		
45	956385814	2	FITTINGS	STUTZEN		
46	10553403	6	WASHER 9/16X25 S355J2;EN 10025-2	SCHEIBE		
47	11217169	6	DISTANCE SLEEVE	DISTANZHUELSE		
48	11279237	1	BRACKET	BUEGEL		
49	10816958	1	FITTING	VERSCHRAUBUNG		
50	10581765	1	HOSE CLAMP	SCHLAUCHSCHELLE		
51	774204914	14	HOSE CLAMP	SCHLAUCHSCHELLE		
53	790244814	1	HOSE CLAMP	SCHLAUCHSCHELLE		
54	11067863	4	HOSE CLAMP	SCHLAUCHSCHELLE		
55	7362546	16	FASTENING CLAMP	HALTERUNGSSCHELLE		
57	477102814	2	FITTING	VERSCHRAUBUNG		
58	477705214	1	FITTING	VERSCHRAUBUNG		
59	7382004	1	CLAMP	SCHELLE		
60	11621772	1	COOLING WATER HOSE	KUEHLWASSERSCHLAUCH		
61	11621769	1	COOLING WATER HOSE	KUEHLWASSERSCHLAUCH		
62	12409205	1	AIR TANK	LUFTBEHAELTER		
63	11925182	1	HOLDER	HALTER		
64	11922682	5	L PLUG-TYPE SCREW COUPLING	L-STECKVERSCHRAUBUNG		

Pos.	Item	Quantity	Description	Bezeichnung	Serie	K
65	11621764	9	AIR PIPE	LUFTLEITUNG		
66	10144282	1	HOSE LINE	SCHLAUCHLEITUNG		
67	10144297	1	HOSE LINE	SCHLAUCHLEITUNG		
68	886002814	1	HOSE	SCHLAUCH		
70	553128608	1	FUEL HOSE	KRAFTSTOFFSCHLAUCH		
71	10227531	6	CORRUGATED PIPE	WELLROHR		
75	10444797	1	CONNECTING PIPE	VERBINDUNGSROHR		
78	406501414	1	HEX SCREW ISO 4017 M8X25 A4-70	SECHSKANTSCHRAUBE		
79	406501714	5	HEX SCREW ISO 4017 M6X16 A4-70	SECHSKANTSCHRAUBE		
80	406518514	10	HEX SCREW ISO 4017 M6X25 A4-70	SECHSKANTSCHRAUBE		
81	406518814	4	HEX SCREW ISO 4017 M8X20 A4-70	SECHSKANTSCHRAUBE		
82	406501314	4	HEX SCREW ISO 4017 M8X30 A4-70	SECHSKANTSCHRAUBE		
83	10538799	2	HEX SCREW ISO 4017 M6X45 A4-70	SECHSKANTSCHRAUBE		
84	10526837	2	HEX SCREW ISO 4017 M6X50 A4-70	SECHSKANTSCHRAUBE		
85	10541593	6	HEX SCREW ISO 4017 M8X85 A4-70	SECHSKANTSCHRAUBE		
86	10539505	4	SOCKET HEAD SCREW ISO 4762 M10X60 A4-7	ZYLINDERSCHRAUBE		
87	406511914	2	HEX SCREW ISO 4017 M10X25 A4-70	SECHSKANTSCHRAUBE		
88	406511214	6	HEX SCREW ISO 4017 M10X70 A4-70	SECHSKANTSCHRAUBE		
89	406518414	1	HEX SCREW ISO 4017 M12X35 A4-70	SECHSKANTSCHRAUBE		
90	420005214	2	WASHER ISO 7089 5 A4	SCHEIBE		
91	420000414	29	WASHER ISO 7089 6 A4	SCHEIBE		
92	420001014	30	WASHER ISO 7089 8 A4	SCHEIBE		
94	421300214	12	WASHER DIN 6340 10.5 C35	SCHEIBE		
95	4635283	2	WASHER DIN 6340 13 ST	SCHEIBE		
97	420001114	4	WASHER ISO 7089 10 A4	SCHEIBE		
100	411551114	2	HEX NUT ISO 4032 M5 A4-70	SECHSKANTMUTTER		
101	10540492	10	HEX NUT ISO 10511 M6 A4	SECHSKANTMUTTER		
102	10540493	8	HEX NUT ISO 10511 M8 A4	SECHSKANTMUTTER		
104	411514614	6	HEX NUT ISO 4032 M10 A4-70	SECHSKANTMUTTER		
105	10540495	1	HEX NUT ISO 10511 M12 A4	SECHSKANTMUTTER		
106	10540494	2	HEX NUT ISO 10511 M10 A4	SECHSKANTMUTTER		
121	11922544	10	BLANKING PLUG	VERSCHLUSSSTOPFEN		
126	11269498	1	HOSE LIST	SCHLAUCHLISTE		
			⇨ ❑ 221			

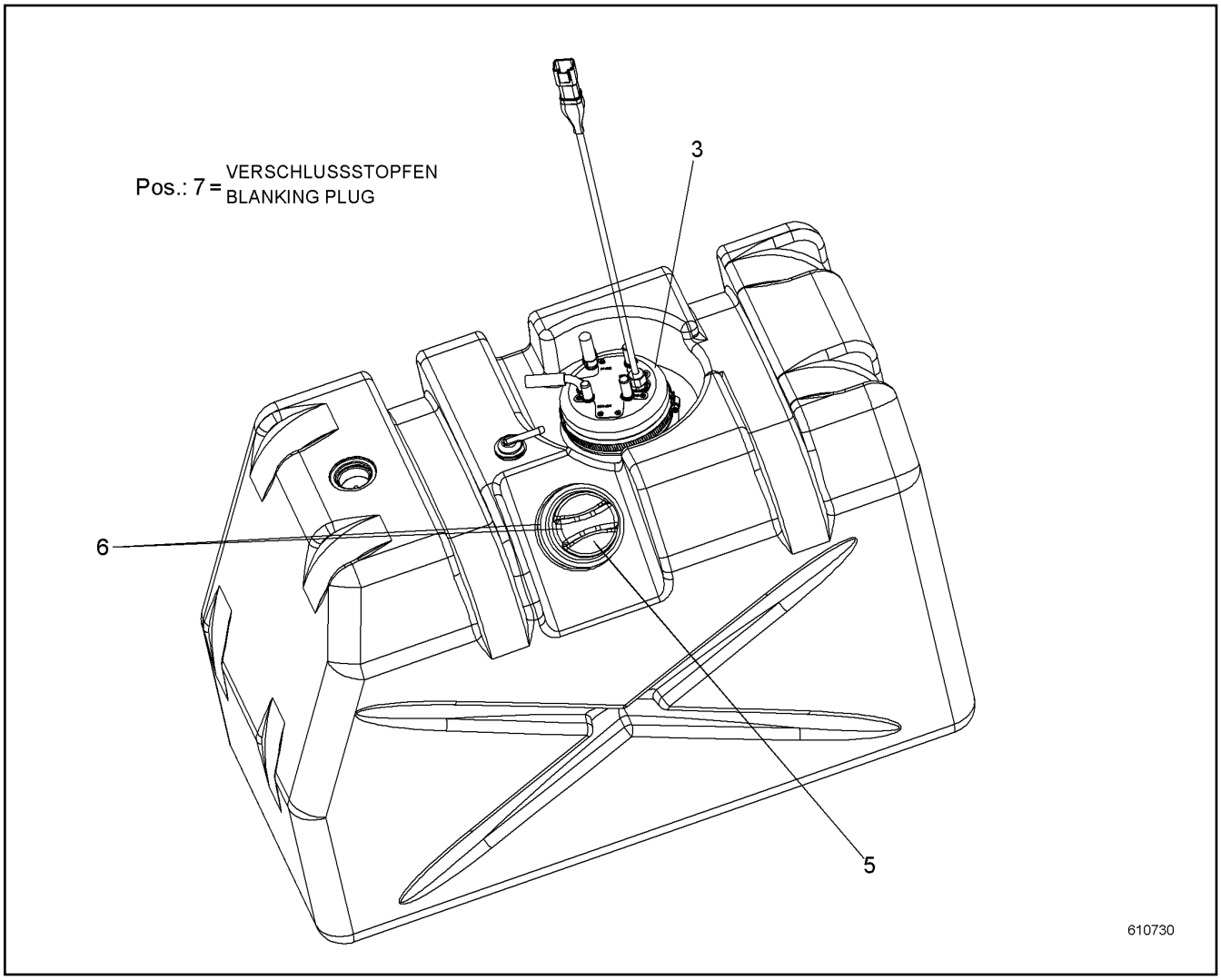

Pos.	Item	Quantity	Description	Bezeichnung	Serie	K
3	11239595	1	SIEVE	SIEB		
5	11101351	1	LOCKABLE TANK CAP	TANKVERSCHLUSS		
6	10146538	1	SUCTION MODUL ⇨ ❑ 220	ENTNAHMEMODUL		
7	11951869	1	BLANKING PLUG	VERSCHLUSSSTOPFEN		

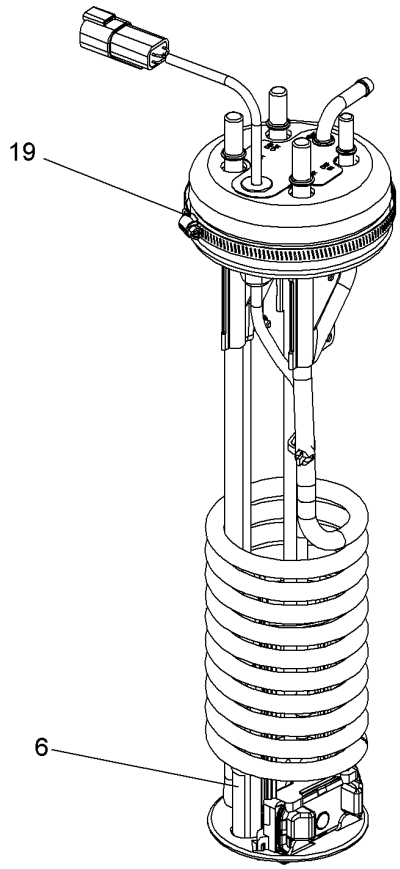

Pos.	Item	Quantity	Description	Bezeichnung	Serie	K
6	11368896	1	STRAINER FILTER	SIEBFILTER		
19	11833907	1	HOSE CLAMP	SCHLAUCHSCHELLE		

ACHTUNG !
ATTENTION !
ATTENTION !
ATENCIÓN !
ATENÇÃO !
ВНИМАНИЕ

Für Schlauchbestellungen kann über die Schlauchnummer, in der entsprechenden Schlauchliste, die Identnummer festgestellt werden.

For ordering flexible hoses you can find the identification number through the hose-number in the corresponding hose-list.

Pour des ordres de tuyau flexible le nombre d'identification on voit dans la liste de tuyau flexible correspondente.

Para el pedido de manguera, indicar el número de identificación de la manguera de la lista respectiva.

Para se encomendar uma mangueira, consulte o número de identificaçao na respectiva lista de mangueiras.

Для оформления заказов на шланги/рукавы идент. № может быть определен при помощи номера шланга/рукава, указанного в соотетствующем перечне шлангов/рукавов.

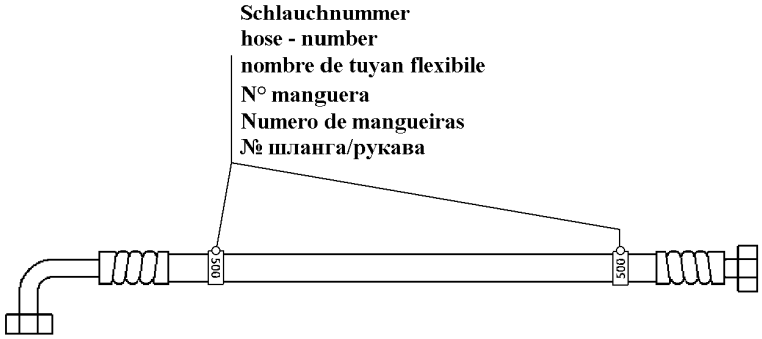

500000

Pos.	Item	Quantity	Description	Bezeichnung	Serie	K
823	996770714	1	HOSE CPL	SCHLAUCH KPL		
824	996770814	1	HOSE CPL	SCHLAUCH KPL		
826	996771014	1	HOSE CPL	SCHLAUCH KPL		
827	996771114	1	HOSE CPL	SCHLAUCH KPL		

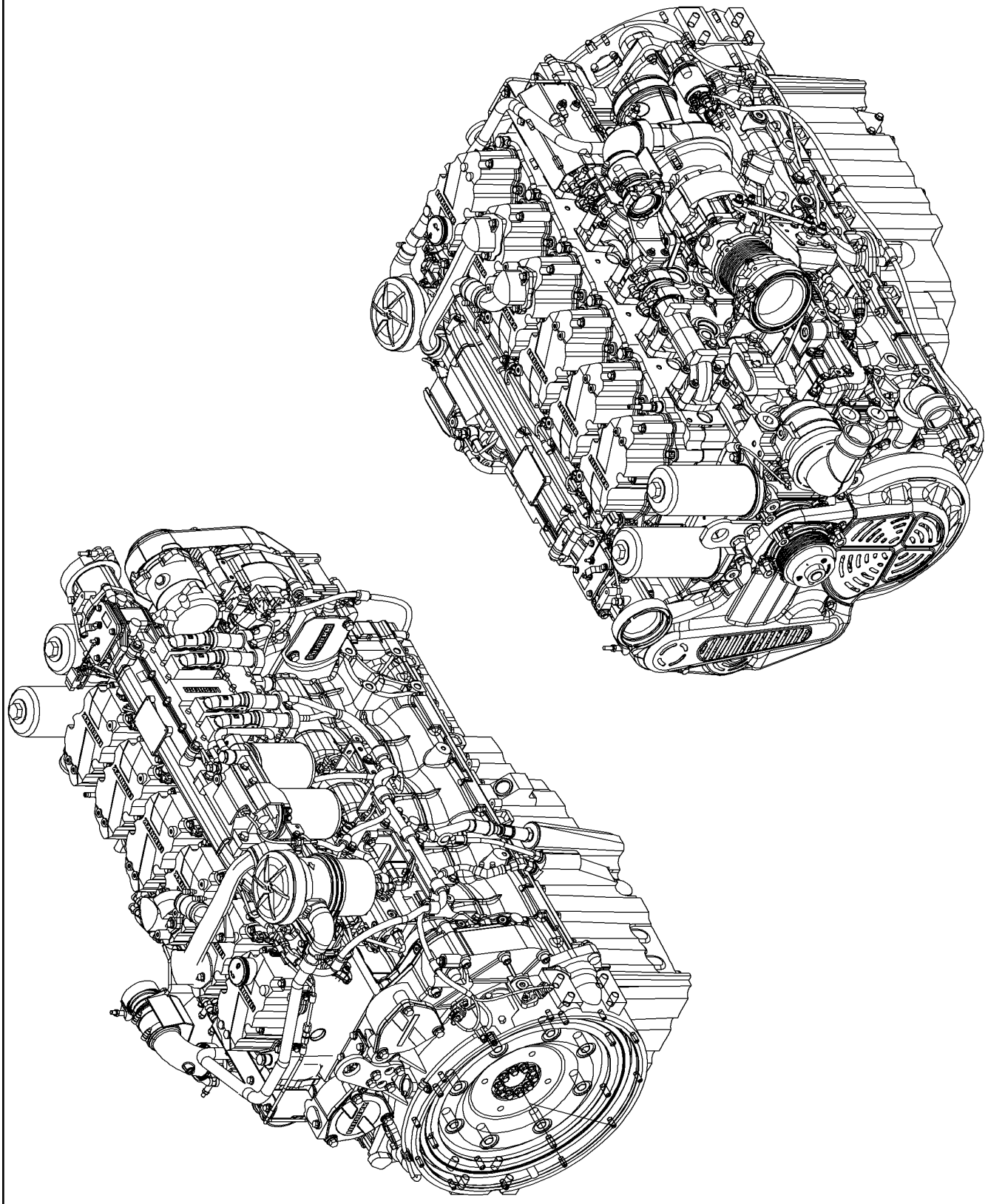

610226

Pos.	Item	Quantity	Description	Bezeichnung	Serie	K
10	11389617	1	CRANKCASE CPL. WITH CYLINDER ⇨ ❑ 226	KURBELGEHAEUSE KPL. MIT ZY		
12	10147686	1	POWER UNIT SUPPORT ATTACHMENT ⇨ ❑ 228	AGGREGATETRAEGER ANBAU		
14	10138450	1	FINAL CONTROL VALVE ⇨ ❑ 229	ENDREGELVENTIL		
15	10142749	6	PISTON COOLING ⇨ ❑ 230	KOLBENKUEHLUNG		
16	10142018	1	CRANKCASE BREATHER ASSEMBLY ⇨ ❑ 232	KURBELGEHAEUSEENTLUEFT.		
20	10148444	1	OIL SUMP WITH FASTENING ⇨ ❑ 234	OELWANNE MIT BEFEST.		
21	10145919	1	OIL DIPSTICK WITH PIPE ⇨ ❑ 237	OELMESSSTAB MIT ROHR		
22	10134517	1	LEVEL SENSOR ⇨ ❑ 238	NIVEAUGEBER		
25	10146716	1	OIL LINE PRE-ASSEMBLY ⇨ ❑ 239	OELLEITUNG VORM.		
50	10147437	1	CRANKSHAFT WITH GEAR	KURBELWELLE MIT ZAHNRAD		
51	9076458	1	SET MAIN BEARINGS ⇨ ❑ 240	KURBELWELLENLAGERSATZ		
52	10121345	1	RK CRANKSHAFT SEAL ⇨ ❑ 241	RS KURBELWELLENDICHTUNG		
53	10141983	1	CRANKSHAFT ADD-ON PARTS	KURBELWELLENANBAUTEILE		
60	11348072	6	CONROD ⇨ ❑ 242	PLEUELSTANGE		
70	10146367	6	PISTON CPL. ⇨ ❑ 243	KOLBEN KPL.		
80	10131768	6	CYL HEAD ADD-ON ⇨ ❑ 244	ZYL KOPF ANBAU		
81	10148438	6	ROCKER ARM BRACKET CPL. ⇨ ❑ 245	KIPPHEBELBOCK KPL.		
82	10134751	3	CYLINDER HEAD COVER ASSEMBLY ⇨ ❑ 247	ZYLINDERKOPFDECKEL ANBAU		
83	10126535	1	CYLINDER HEAD COVER ASSEMBLY ⇨ ❑ 248	ZYLINDERKOPFDECKEL ANBAU		
84	10134696	2	CYLINDER HEAD COVER ASSEMBLY ⇨ ❑ 250	ZYLINDERKOPFDECKEL ANBAU		
100	10138231	1	CAMSHAFT CPL.	NOCKENWELLE KPL.		
110	9079870	6	CONTROL PARTS	STEUERUNGSTEIL		
130	10129481	1	OIL COOLER ADD-ON ⇨ ❑ 251	OELKUEHLER ANBAU		
140	10133945	1	LUBRICATING OIL PUMP ⇨ ❑ 254	SCHMIEROELPUMPE		
141	10133947	1	SUCTION PUMP WITH FASTENING ⇨ ❑ 255	ABSAUGPUMPE MIT BEFEST.		
150	10142942	1	LUBE OIL FILTER ASSEMBLY ⇨ ❑ 257	SCHMIEROELFILTER ANBAU		
171	10150857	1	HIGH PRESSURE PUMP W.FASTENING ⇨ ❑ 258	HOCHDRUCKPUMPE MIT BEFEST		
180	10153606	1	REPAIR SET DRIVE	RS ANTRIEB		
190	10152867	6	INJECTOR WITH FASTENING ⇨ ❑ 261	INJEKTOR MIT BEFEST.		
191	10153151	6	HIGH PRESSURE CONNECTOR ⇨ ❑ 262	DRUCKROHRSTUTZEN		
192	10135432	6	INJECTOR FASTENING ⇨ ❑ 265	BEFESTIGUNG INJEKTOR		
193	10135434	6	PRESSURE ADAPTER FASTENING ⇨ ❑ 266	BEFESTIGUNG DRUCKROHRST		

Pos.	Item	Quantity	Description	Bezeichnung	Serie	K
201	10146797	1	FUEL FINE-FILTER ASSEMBLY ⇨ ❑ 267	KRAFTSTOFF-FEINFILTERANBA		
212	10143339	1	FUEL LINES ⇨ ❑ 269	KRAFTSTOFFLEITUNGEN		
214	10145885	1	LEAK OIL RETURN LINE ⇨ ❑ 270	LECKOELRUECKLAUF		
215	10143828	1	INJECTION LINES ⇨ ❑ 271	EINSPRITZLEITUNGEN		
217	10141790	1	CONNECTING PIECE PRE-ASS. ⇨ ❑ 272	ANSCHLUSSSTUECK VORM.		
220	10147366	1	AIR INTAKE PIPE ASS. ⇨ ❑ 273	LUFTANSAUGROHR ANBAU		
221	10147369	1	INTAKE STACK ASSEMBLY ⇨ ❑ 274	ANSAUGSTUTZEN ANBAU		
224	10147364	1	AIR INTAKE ASSEMBLY ⇨ ❑ 275	LUFTANSAUGUNG ANBAU		
230	10149676	1	CONNECTING LINE ADD-ON ⇨ ❑ 276	VERBINDUNGSLEITUNG ANBAU		
260	9078314	1	HEATING FLANGE ADD-ON ⇨ ❑ 277	HEIZFLANSCH ANBAU		
331	9072906	1	INTERMEDIATE GEAR CPL. ⇨ ❑ 279	ZWISCHENRAD KPL.		
340	10142860	1	AIR COND. COMPRESSOR ADD-ON ⇨ ❑ 280	KLIMAKOMPRESSOR ANBAU		
342	10146117	1	COVERING ASSEMBLY ⇨ ❑ 281	ABDECKUNG ANBAU		
370	10142734	1	WATER PUMP WITH FASTENING ⇨ ❑ 283	WASSERPUMPE MIT BEFEST.		
380	10148215	1	THERMOSTAT HOUSING ASSEMBLY ⇨ ❑ 284	THERMOSTATGEHAEUSE ANBA		
381	10148217	1	PIPELINE INSTALLATION ⇨ ❑ 285	ROHRLEITUNG ANBAU		
382	10142742	1	COOLANT PIPE BEND ADD-ON ⇨ ❑ 286	KUEHLMITTELKRUEMMER ANBA		
387	10142744	1	COOLING WATER AIR BLEEDING ⇨ ❑ 287	KUEHLWASSERENTLUEFTUNG		
388	10146012	1	MANIFOLD FOR WATER CPL. ⇨ ❑ 288	WASSERSAMMELLEITUNG KPL.		
410	10141444	1	EXHAUST PIPE ASSEMBLY ⇨ ❑ 289	ABGASROHR ANBAU		
415	10147370	1	HEAT PROTECTION W.FASTENING ⇨ ❑ 291	HITZESCHUTZ MIT BEFEST.		
430	10140136	1	EXHAUST TC MOUNTING ⇨ ❑ 292	ATL-ANBAU		
432	10145112	1	EXHAUST NOZZLE ATTACHMENT ⇨ ❑ 293	ABGASSTUTZEN ANBAU		
436	10146224	1	REGULATION BOOST PRESSURE ⇨ ❑ 294	LADEDRUCKREGELUNG		
440	10145845	1	GENERATOR, PRE-ASSEMBLED ⇨ ❑ 295	GENERATOR VORM.		
450	10120372	1	STARTER INSTALLATION ⇨ ❑ 296	STARTER ANBAU		
452	10115664	1	LOCKING PIECES	VERSCHLUSSTEILE		
480	9079823	1	TRANSPORT DEVICE ATTACHEMENT	TRANSPORTVORRICHTUNG AN		
481	10142864	1	TRANSPORT DEVICE ATTACHEMENT ⇨ ❑ 298	TRANSPORTVORRICHTUNG AN		
520	10115577	1	FLYWHEEL HOUSING MOUNTING ⇨ ❑ 299	SCHWUNGRADGEHAEUSE ANBA		
521	10116110	1	LOCKING PIECES	VERSCHLUSSTEILE		

Pos.	Item	Quantity	Description	Bezeichnung	Serie	K
522	10119128	1	LOCKING PIECES ⇨ ❑ 300	VERSCHLUSSTEILE		
524	10128439	1	LOCKING PIECES ⇨ ❑ 301	VERSCHLUSSTEILE		
526	10127979	1	LOCKING PIECES ⇨ ❑ 302	VERSCHLUSSTEILE		
530	10118929	1	FLYWHEEL ASSEMBLY ⇨ ❑ 303	SCHWUNGRAD ANBAU		
570	12425589	1	MOTOR CONTROL DEVICE ⇨ ❑ 304	MOTORSTEUERGERAET		
571	10146795	1	CONTROL BOX ANNEXE	STEUERGERAET ANBAU		
580	10150288	1	CABLE HARNESS MOUNTING ⇨ ❑ 305	KABELBAUM ANBAU		
581	10142977	1	ENGINE CONTROL SENSORS ⇨ ❑ 306	MOTORREGELUNGSENSORIK		
582	11376327	1	CABLE LOOM	KABELSATZ		
630	10142747	1	LOCKING PIECES	VERSCHLUSSTEILE		
650	9078249	1	LOCKING PIECES	VERSCHLUSSTEILE		
652	10144027	1	LOCKING PIECES	VERSCHLUSSTEILE		
654	9078301	1	LOCKING PIECES	VERSCHLUSSTEILE		
656	10146374	1	LOCKING PIECES ⇨ ❑ 307	VERSCHLUSSTEILE		

OHNE BILD
WITHOUT ILLUSTRATION
SANS PLANCHE
SIN FIG.
SEM ILUSTRAÇÃO
БЕЗ ИЗОБРАЖЕНИЯ

600000

Pos.	Item	Quantity	Description	Bezeichnung	Serie	K
1	10154385	1	CRANKCASE PRE-ASSY.	KURBELGEHAEUSE VORM.		
2	4980362	6	END COVER	VERSCHLUSSDECKEL		
3	4001664	11	END COVER	VERSCHLUSSDECKEL		
4	7380177	3	SCREW PLUG	VERSCHLUSSSCHRAUBE		
6	7380566	3	SCREW PLUG	VERSCHLUSSSCHRAUBE		
7	7381457	2	SCREW PLUG	VERSCHLUSSSCHRAUBE		
8	7382069	1	SEALING PLUG	DICHTSTOPFEN		
14	10030837	14	SEALING PLUG	DICHTSTOPFEN		
80	10154458	6	CYLINDER ⇨ ❑ 227	ZYLINDER		
104	8655023	1	GLUE	KLEBSTOFF		

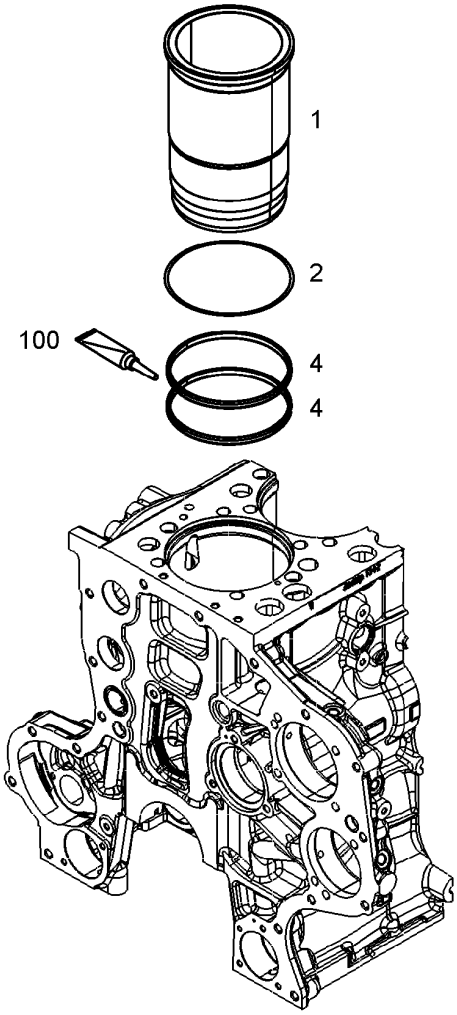

Pos.	Item	Quantity	Description	Bezeichnung	Serie	K
1	10153973	1	CYLINDER BUSHING	ZYLINDERBUCHSE		
2	10154459	1	SHEET GASKET	DICHTSCHEIBE		
4	10282774	2	O-RING	O-RING		
100	10285708	1	GREASE	FETT		

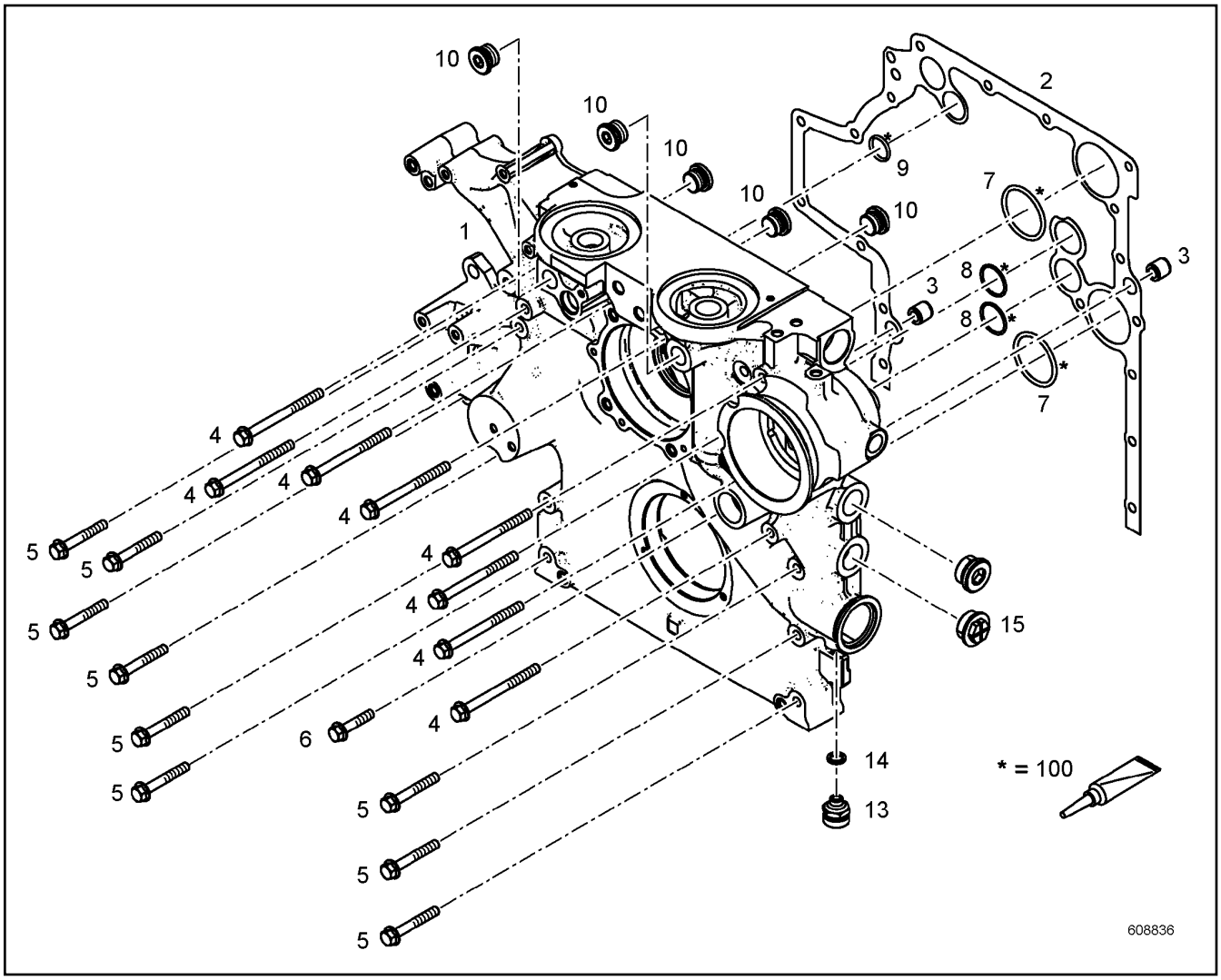

Pos.	Item	Quantity	Description	Bezeichnung	Serie	K
1	10148254	1	AGGREGATE SUPPORT PRE-ASS.	AGGREGATETRAEGER VORM.		
2	10126738	1	SEAL	DICHTUNG		
3	10134348	2	TIGHT FIT SLEEVE 16X20X20	PASSHUELSE		
4	10037312	8	HEX SCREW EN 1665 M10X120 10.9	SECHSKANTSCHRAUBE		
5	10114153	9	HEX SCREW DIN 6921 M10X70 10.9	SECHSKANTSCHRAUBE		
6	10035580	1	HEX SCREW DIN 6921 M10X50 10.9	SECHSKANTSCHRAUBE		
7	7381779	2	O-RING	O-RING		
8	7380653	2	O-RING	O-RING		
9	10004261	1	O-RING	O-RING		
10	10041903	5	SCREW PLUG	VERSCHLUSSSCHRAUBE		
13	10011832	1	VALVE	VENTIL		
14	7381225	1	SEALING RING	DICHTRING		
15	10465711	1	SEALING PLUG	DICHTSTOPFEN		
100	10285708	1	GREASE	FETT		

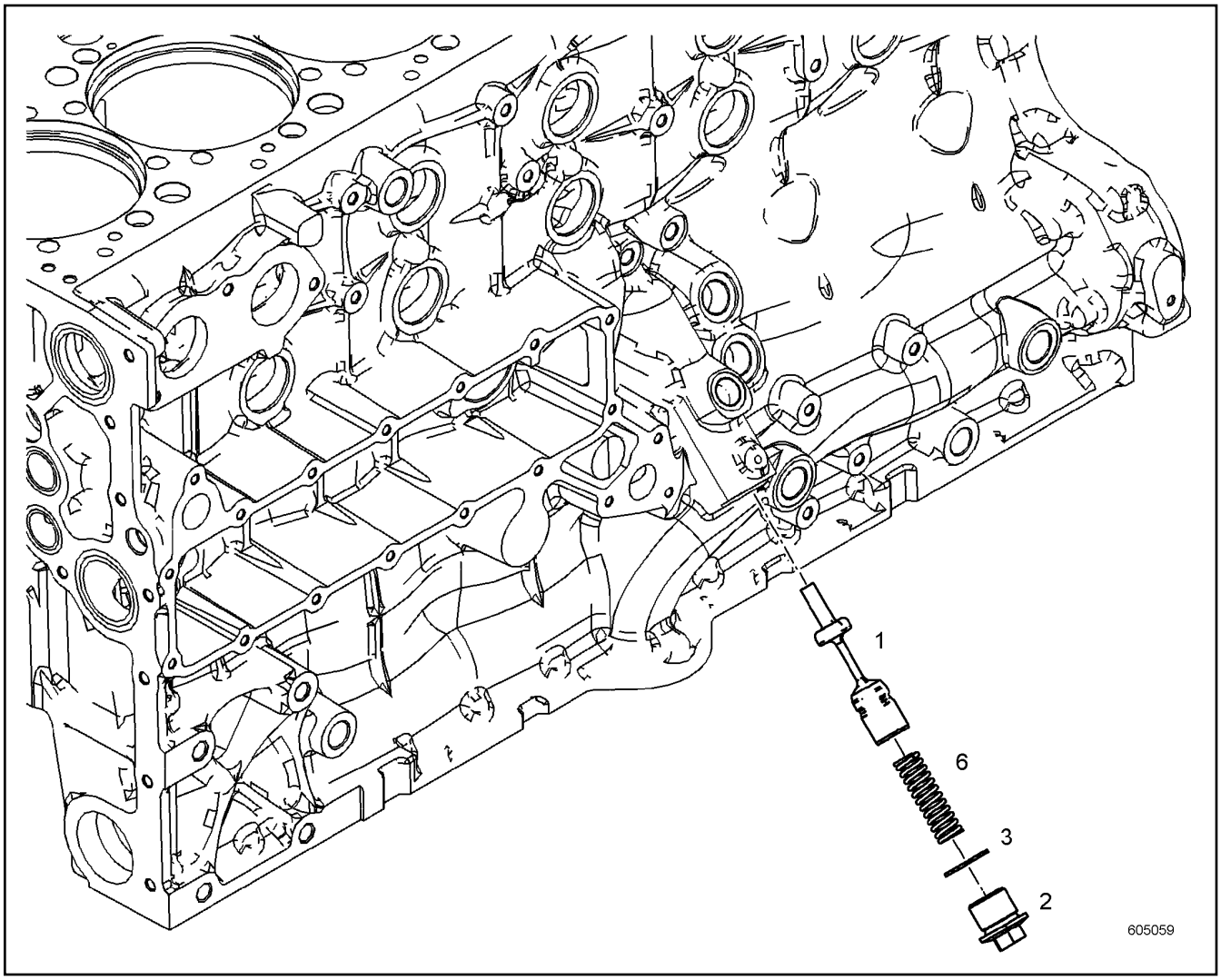

Pos.	Item	Quantity	Description	Bezeichnung	Serie	K
1	10149655	1	PISTON	KOLBEN		
2	10137918	1	SCREW PLUG 11SMNPB30+C;EN 10277-3	VERSCHLUSSSCHRAUBE		
3	7101021	1	SEALING RING	DICHTRING		
6	11118160	1	PRESSURE SPRING	DRUCKFEDER		

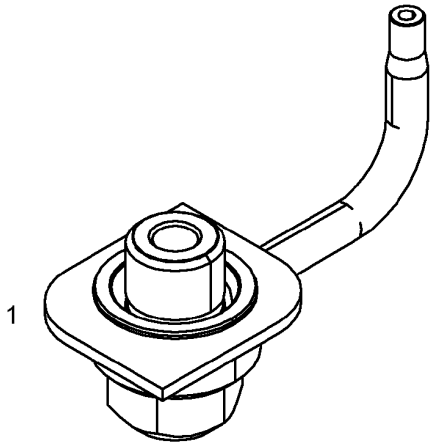

607381

Pos.	Item	Quantity	Description	Bezeichnung	Serie	K
1	10151634	1	PISTON COOLING PRE-ASS. ⇨ ❑ 231	KOLBENKUEHLUNG VORM.		

OHNE BILD
WITHOUT ILLUSTRATION
SANS PLANCHE
SIN FIG.
SEM ILUSTRAÇÃO
БЕЗ ИЗОБРАЖЕНИЯ

600000

Pos.	Item	Quantity	Description	Bezeichnung	Serie	K
1	10151636	1	PISTON COOLING NOZZLE	KOLBENKUEHLDUESE		
2	10151637	1	HOLLOW SCREW	HOHLSCHRAUBE		

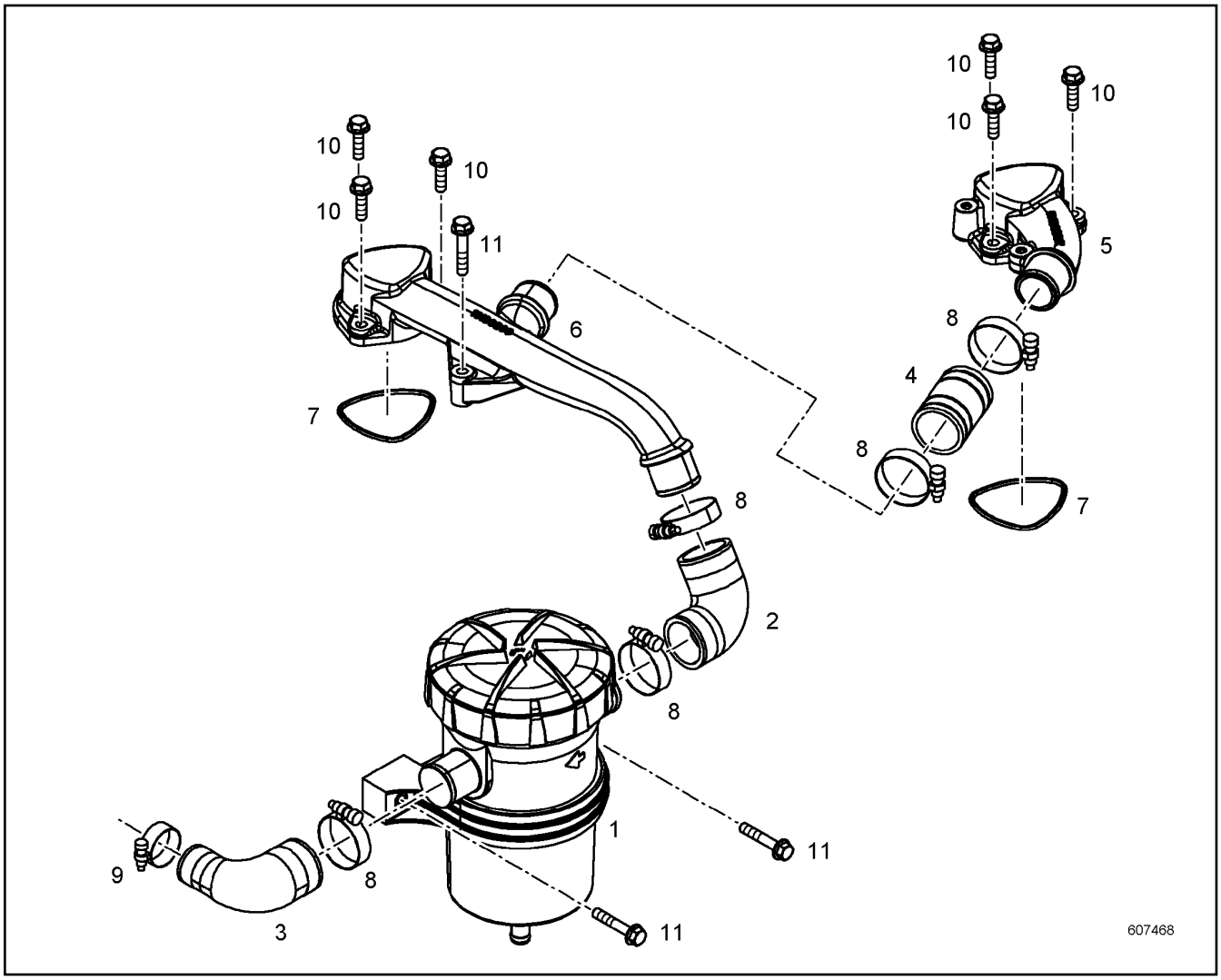

Pos.	Item	Quantity	Description	Bezeichnung	Serie	K
1	10136800	1	CRANKCASE BREATHER ⇨ ❑ 233	KURBELGEHAEUSEENTLUEFTUN		
2	10126091	1	RUBBER CONNECTION	GUMMIMUFFE		
3	10133641	1	RUBBER CONNECTION	GUMMIMUFFE		
4	10126090	1	RUBBER CONNECTION	GUMMIMUFFE		
5	10139393	1	CONNECTION PIECE	ANSCHLUSSSTUECK		
6	10139391	1	CONNECTION PIECE	ANSCHLUSSSTUECK		
7	7381593	2	O-RING	O-RING		
8	5700024	5	HOSE CLAMP	SCHLAUCHSCHELLE		
9	5004927	1	HOSE CLAMP	SCHLAUCHSCHELLE		
10	10007782	6	HEX SCREW EN 1665 M8X30 8.8	SECHSKANTSCHRAUBE		
11	10016907	3	HEX SCREW EN 1665 M8X45 8.8	SECHSKANTSCHRAUBE		

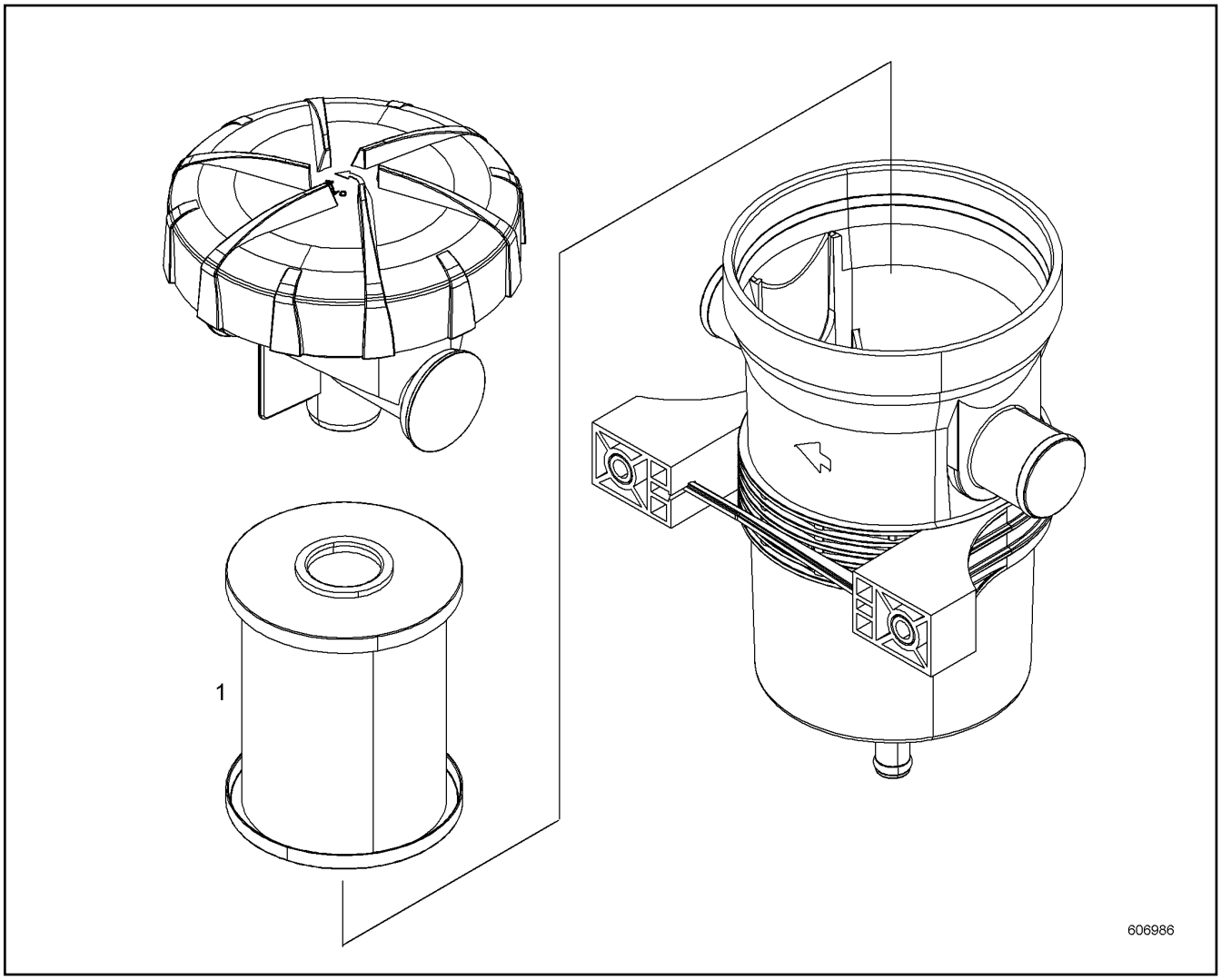

Pos.	Item	Quantity	Description	Bezeichnung	Serie	K
1	10136801	1	SPARE ELEMENT	ERSATZELEMENT		

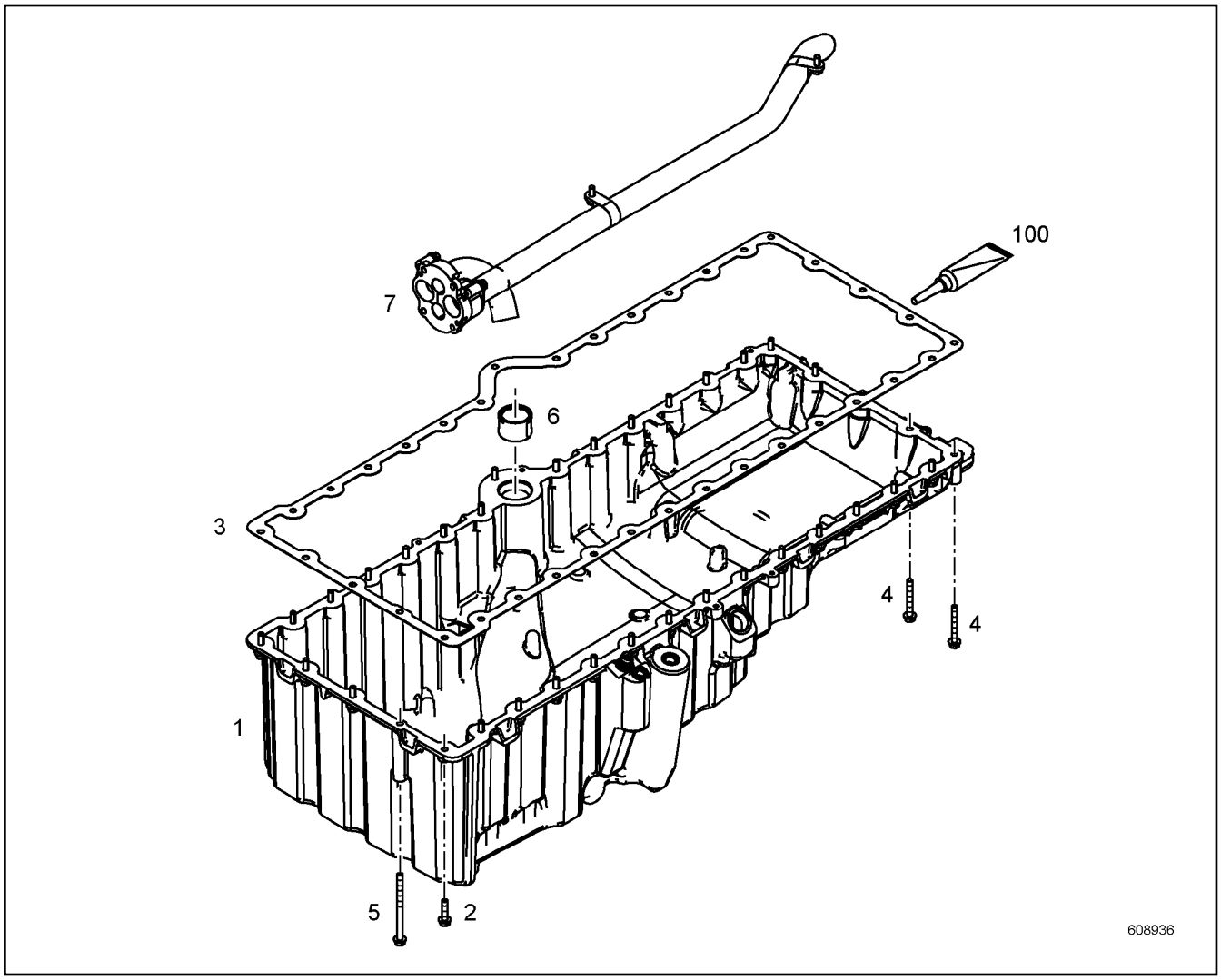

Pos.	Item	Quantity	Description	Bezeichnung	Serie	K
1	10155298	1	OIL SUMP PRE-ASS. ⇨ ❑ 235	OELWANNE VORM.		
2	10113711	33	HEX SCREW EN 1665 M8X35 8.8	SECHSKANTSCHRAUBE		
3	10126427	1	SEAL	DICHTUNG		
4	10100304	2	HEX SCREW EN 1665 M8X65 8.8	SECHSKANTSCHRAUBE		
5	10017158	1	HEX SCREW EN 1665 M8X120 8.8	SECHSKANTSCHRAUBE		
6	10125386	1	PLUG-IN PIPE	STECKROHR		
7	10139539	1	PIPELINE INSTALLATION	ROHRLEITUNG ANBAU		
100	10354595	1	SURFACE SEALING	FLAECHENDICHTUNG		

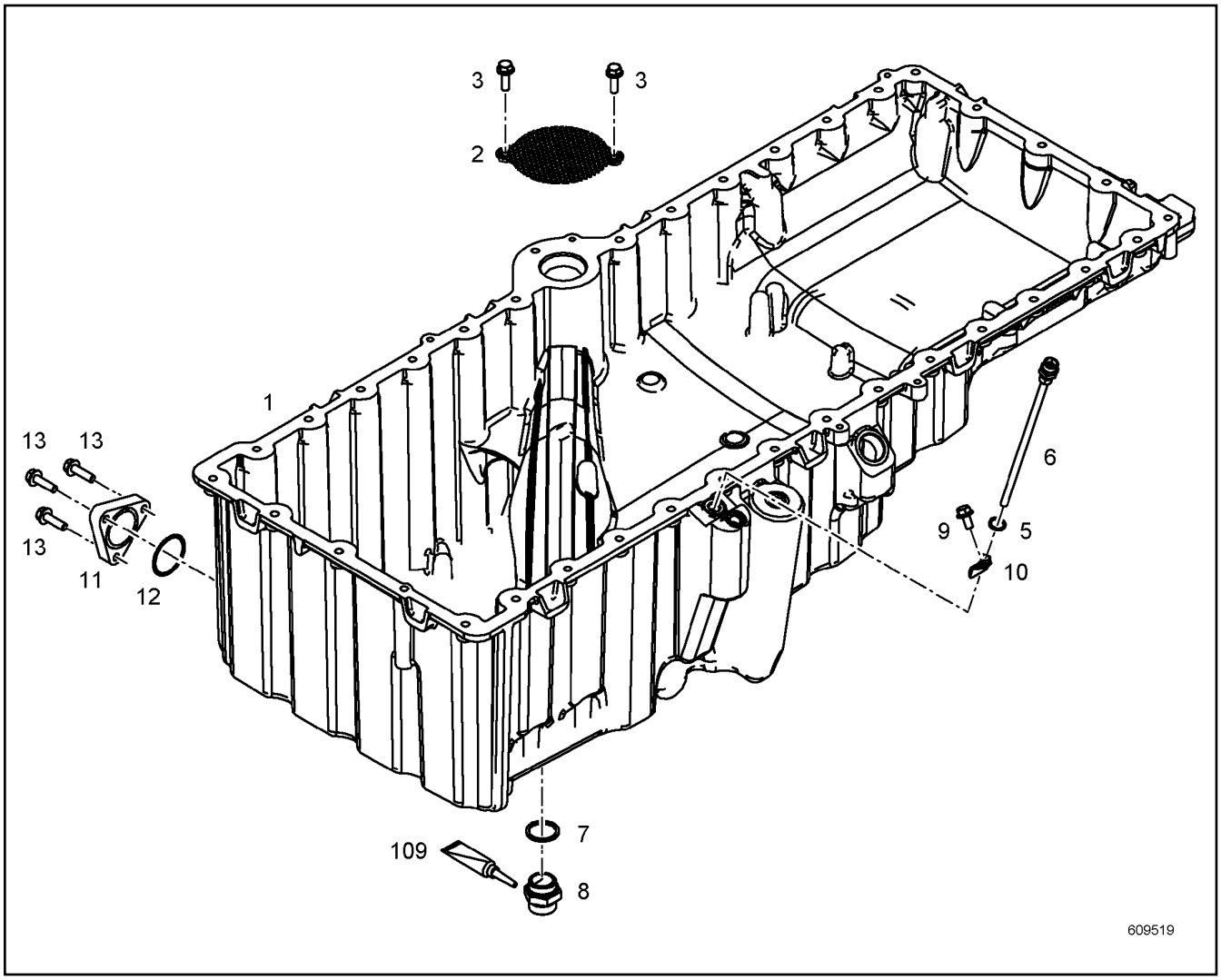

Pos.	Item	Quantity	Description	Bezeichnung	Serie	K
1	10155297	1	OIL SUMP	OELWANNE		
2	10135441	1	PERFORATED PLATE	LOCHBLECH		
3	11833770	2	HEX SCREW DIN 6921 M8X30 8.8	SECHSKANTSCHRAUBE		
5	7101008	1	SEALING RING	DICHTRING		
6	9080660	1	TUBE	ROHR		
7	7101021	1	SEALING RING	DICHTRING		
8	5004624	1	OIL DRAIN PLUG ⇨ ❑ 236	OELABLASSSCHRAUBE		
9	10005511	1	HEX SCREW DIN EN 1665 M8X16 8.8	SECHSKANTSCHRAUBE		
10	10122693	1	CLAMP	SCHELLE		
11	10149013	1	COVER	DECKEL		
12	7380423	1	O-RING	O-RING		
13	4038502	3	DOUBLE-ENDED STUD DIN 835 M8X35 8.8	STIFTSCHRAUBE		
14	10424333	3	HEX NUT EN 1661 M8 8	SECHSKANTMUTTER		
105	811202114	1	SCREW LOCKING	SCHRAUBENSICHERUNG		
109	8627609	1	SEALANT	DICHTUNGSMITTEL		

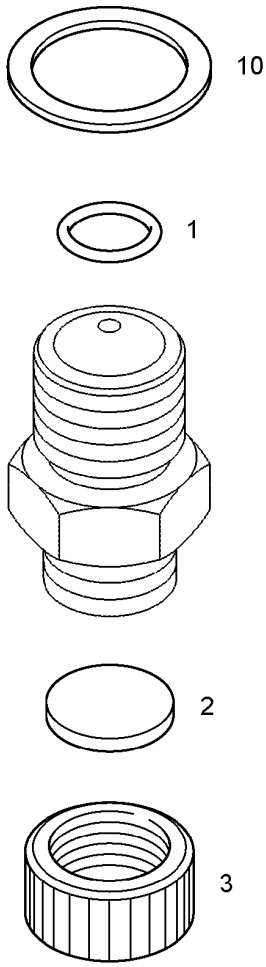

Pos.	Item	Quantity	Description	Bezeichnung	Serie	K
1	7264625	1	O-RING	O-RING		
2	7011131	1	SEAL	DICHTUNG		
3	7013456	1	PROTECTING CAP	SCHUTZKAPPE		
10	7101021	1	SEALING RING	DICHTRING		

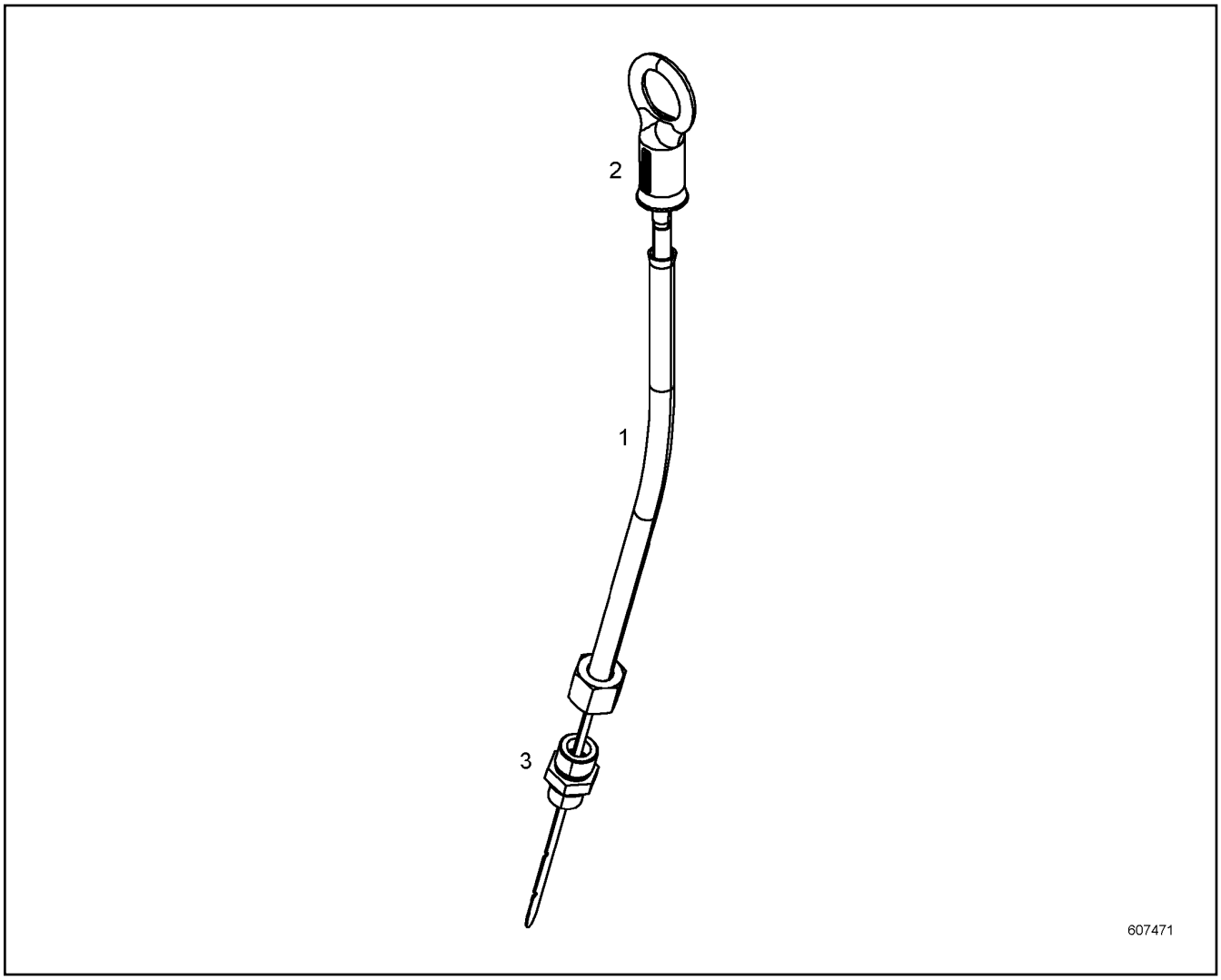

Pos.	Item	Quantity	Description	Bezeichnung	Serie	K
1	9266847	1	GUIDING PIPE	FUEHRUNGSROHR		
2	10145918	1	OIL DIPSTICK	OELMESSSTAB		
3	4981235	1	FITTING	VERSCHRAUBUNG		

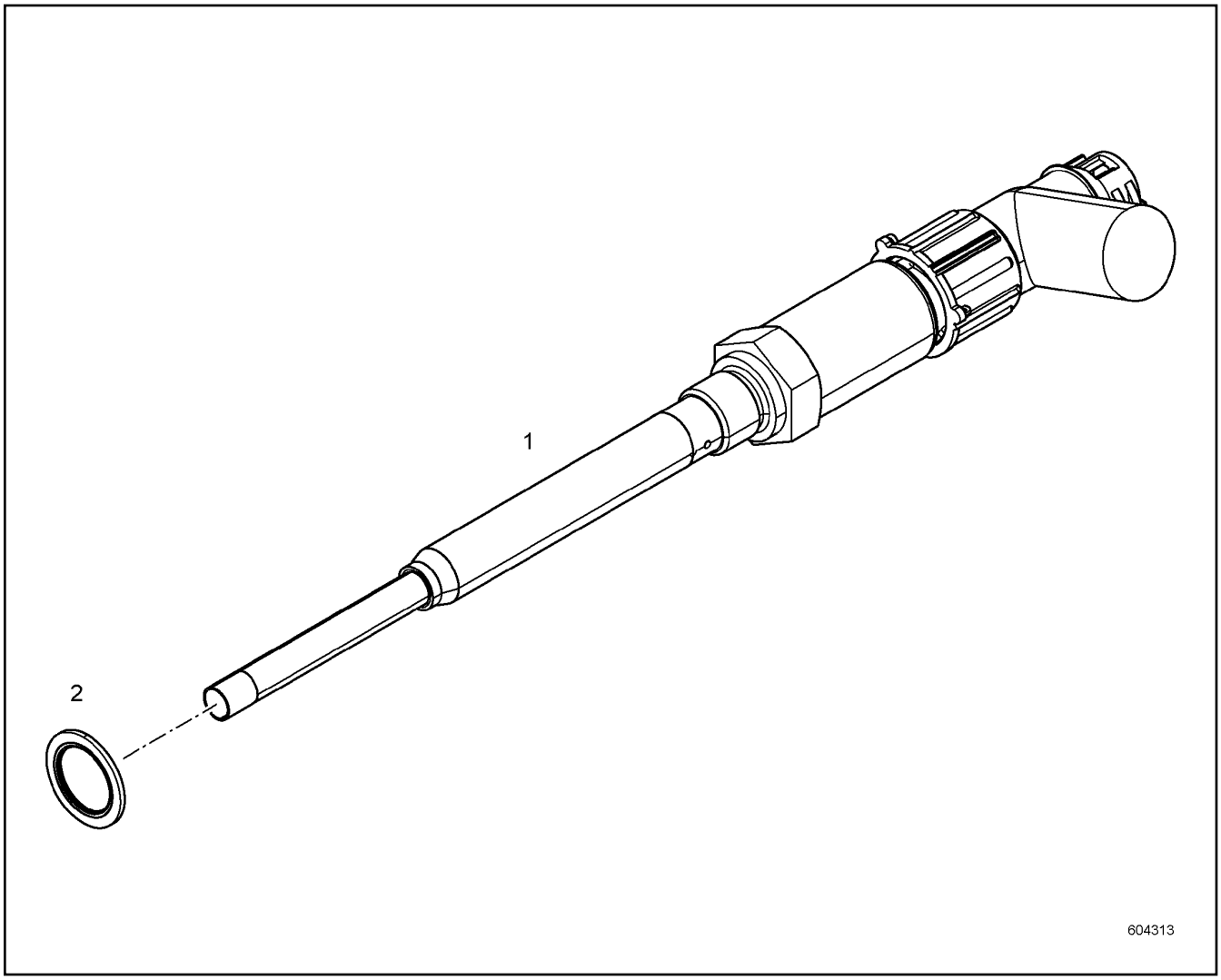

Pos.	Item	Quantity	Description	Bezeichnung	Serie	K
1	11088130	1	LEVEL SENSOR	NIVEAUGEBER		
2	10011868	1	SEALING RING	DICHTRING		

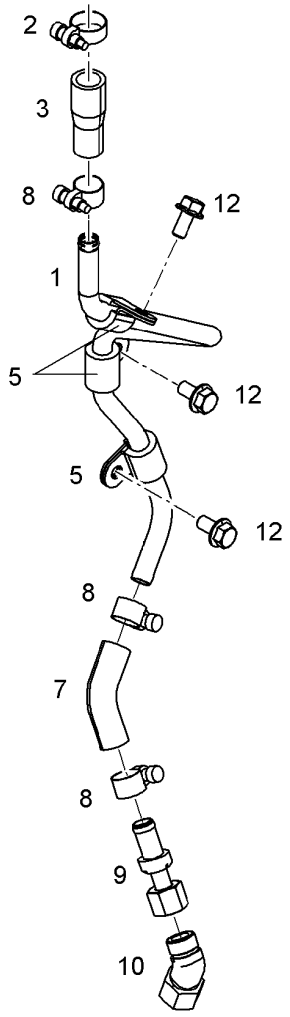

Pos.	Item	Quantity	Description	Bezeichnung	Serie	K
1	10131350	1	OIL RETURN PIPE	OELRUECKLAUFLEITUNG		
2	4901138	1	HOSE CLAMP	SCHLAUCHSCHELLE		
3	10123671	1	RUBBER CONNECTION	GUMMIMUFFE		
5	7381629	3	CLAMP	SCHELLE		
7	10126317	1	RUBBER CONNECTION	GUMMIMUFFE		
8	4981029	3	HOSE CLAMP	SCHLAUCHSCHELLE		
9	10119971	1	NON-RETURN VALVE	RUECKSCHLAGVENTIL		
10	7027665	1	FITTING	VERSCHRAUBUNG		
12	10005078	3	HEX SCREW EN 1665 M8X16 8.8	SECHSKANTSCHRAUBE		

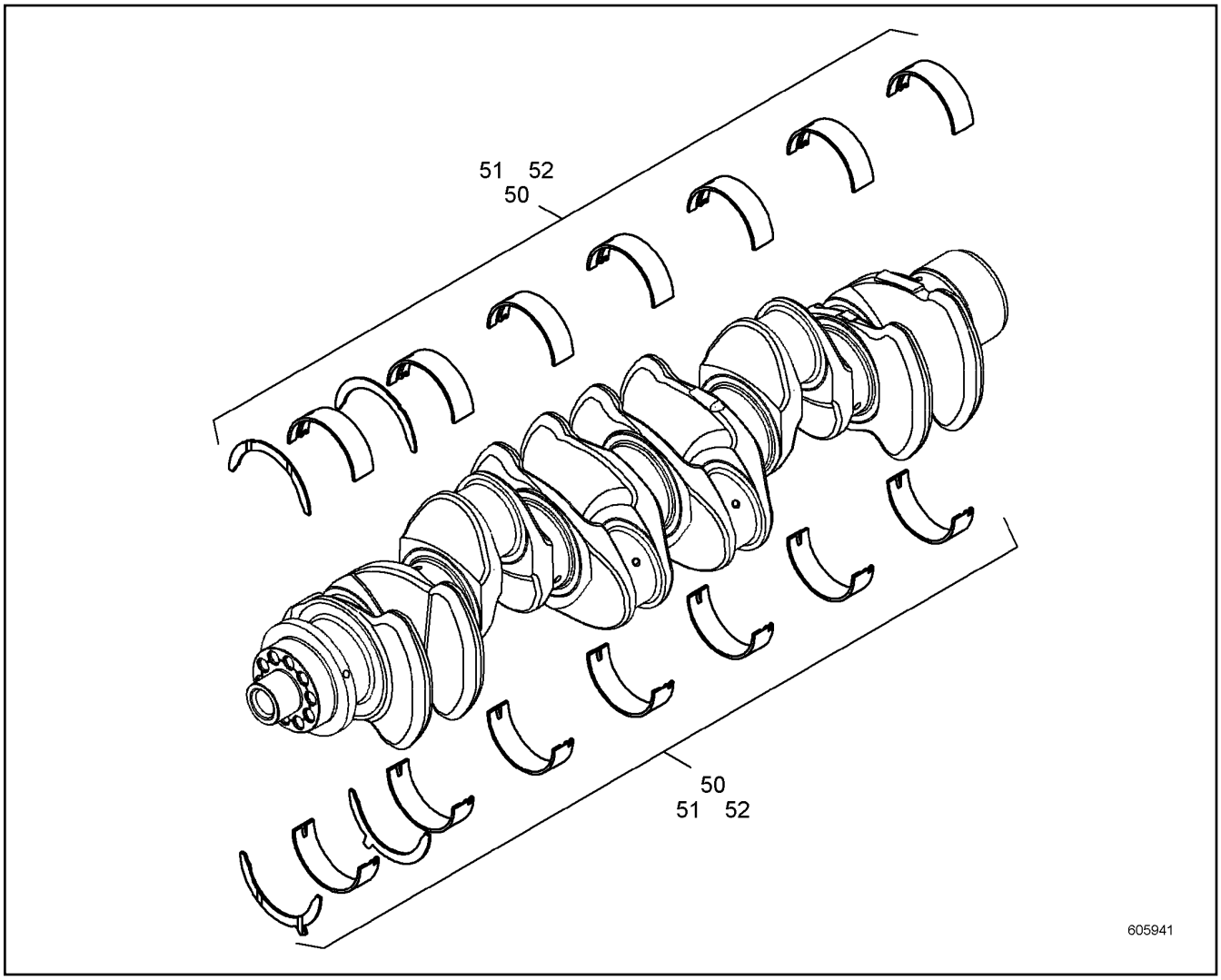

Pos.	Item	Quantity	Description	Bezeichnung	Serie	K
50	10116928	1	RK CRANKSHAFT BEARING	RS KURBELWELLENLAGERUNG		
51	10140599	1	RK1 MAIN BEARING CPL.	RS1 KURBELWELLENLAGERUNG		
52	10140603	1	RK2 MAIN BEARING CPL.	RS2 KURBELWELLENLAGERUNG		

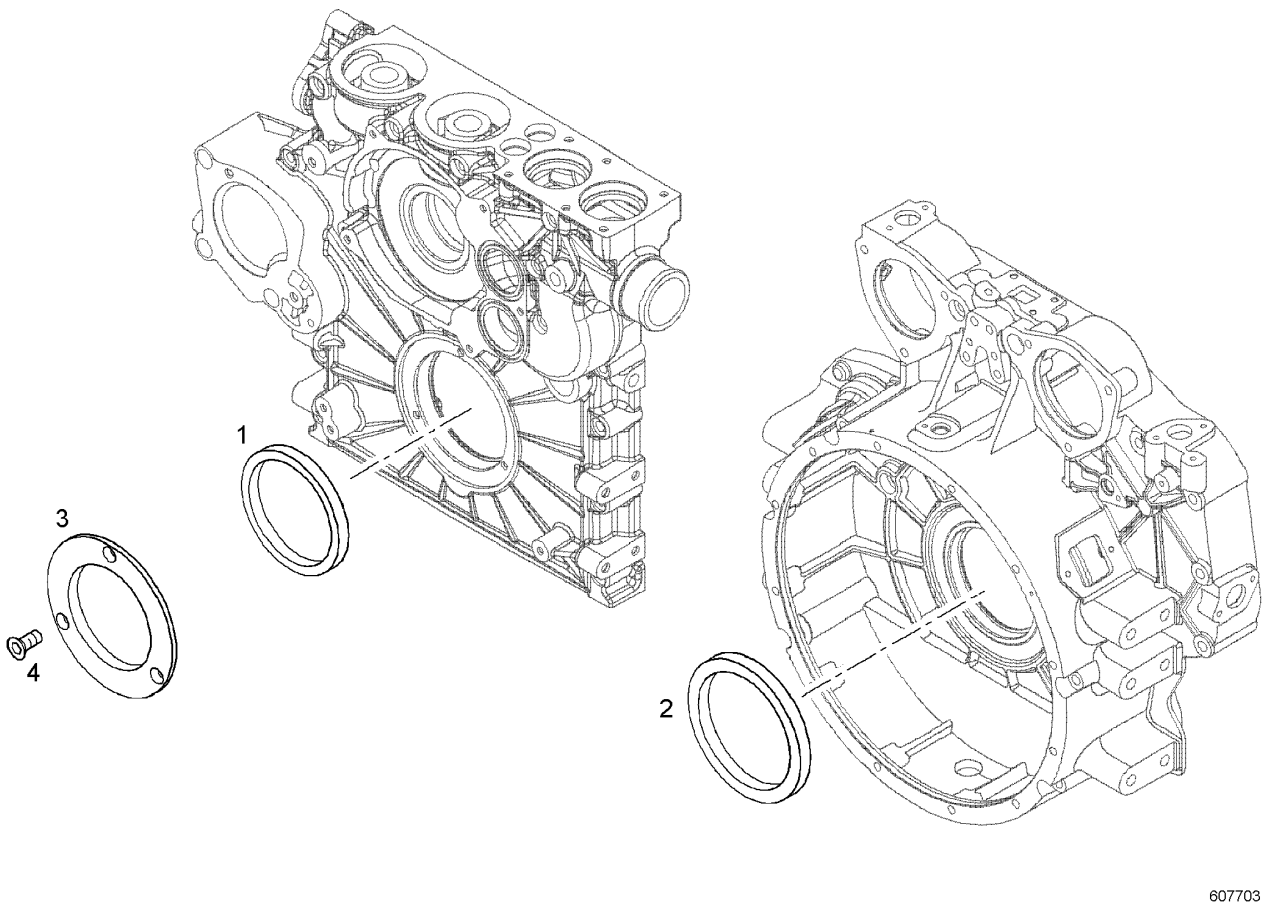

Pos.	Item	Quantity	Description	Bezeichnung	Serie	K
1	10121952	1	RK CRANKSHAFT SEAL	RS KURBELWELLENDICHTUNG		
2	10121335	1	RK CRANKSHAFT SEAL	RS KURBELWELLENDICHTUNG		
3	10120443	1	GUARD RING	SCHUTZRING		
4	10342191	3	COUNTERSUNK SCREW ISO 14581 M8X20 8.8	SENKSCHRAUBE		

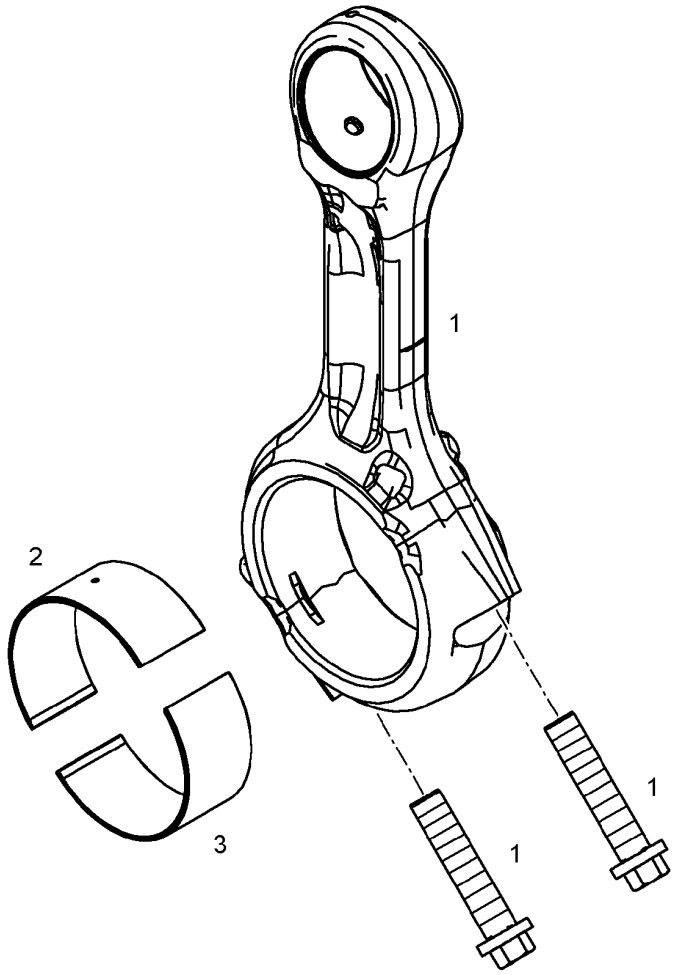

Pos.	Item	Quantity	Description	Bezeichnung	Serie	K
1	11348054	1	CONROD	PLEUELSTANGE		
2	10145100	1	CONNECTING ROD BEARING	PLEUELLAGER		
3	10145101	1	CONNECTING ROD BEARING	PLEUELLAGER		

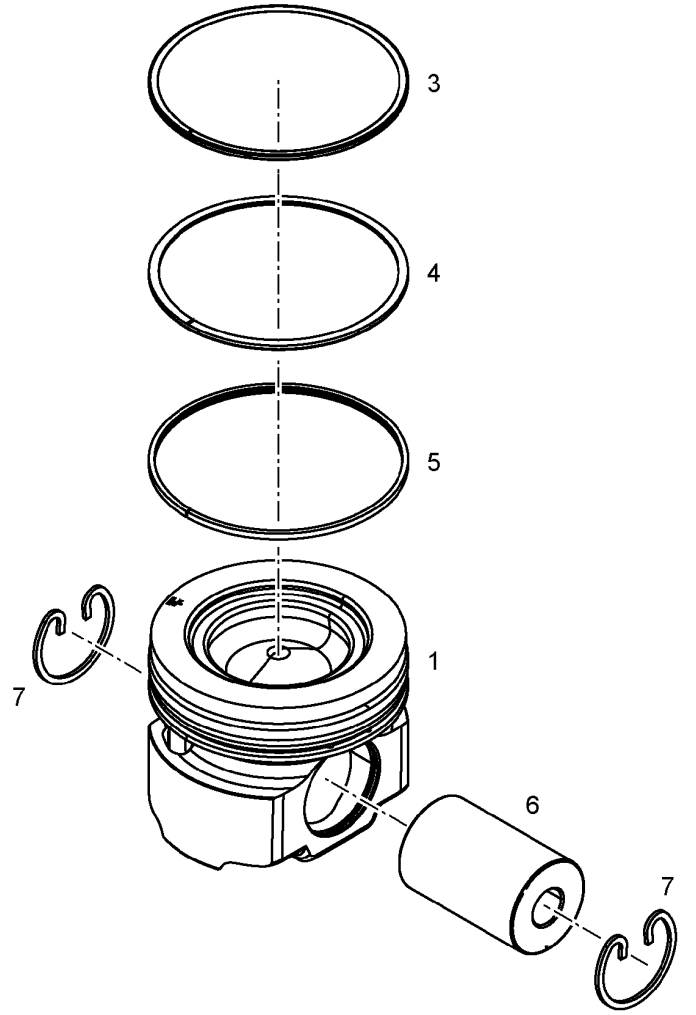

Pos.	Item	Quantity	Description	Bezeichnung	Serie	K
1	10143510	1	PISTON	KOLBEN		
3	11351303	1	KBA-RING	KBA-RING		
4	12476138	1	PISTON RING MG	M-RING		
5	10146358	1	DSF RING	DSF-RING		
6	10282849	1	PISTON BOLT 52X80 16MNCR5	KOLBENBOLZEN		
7	4980482	2	SNAP RING 52X2 FST	SPRENGRING		

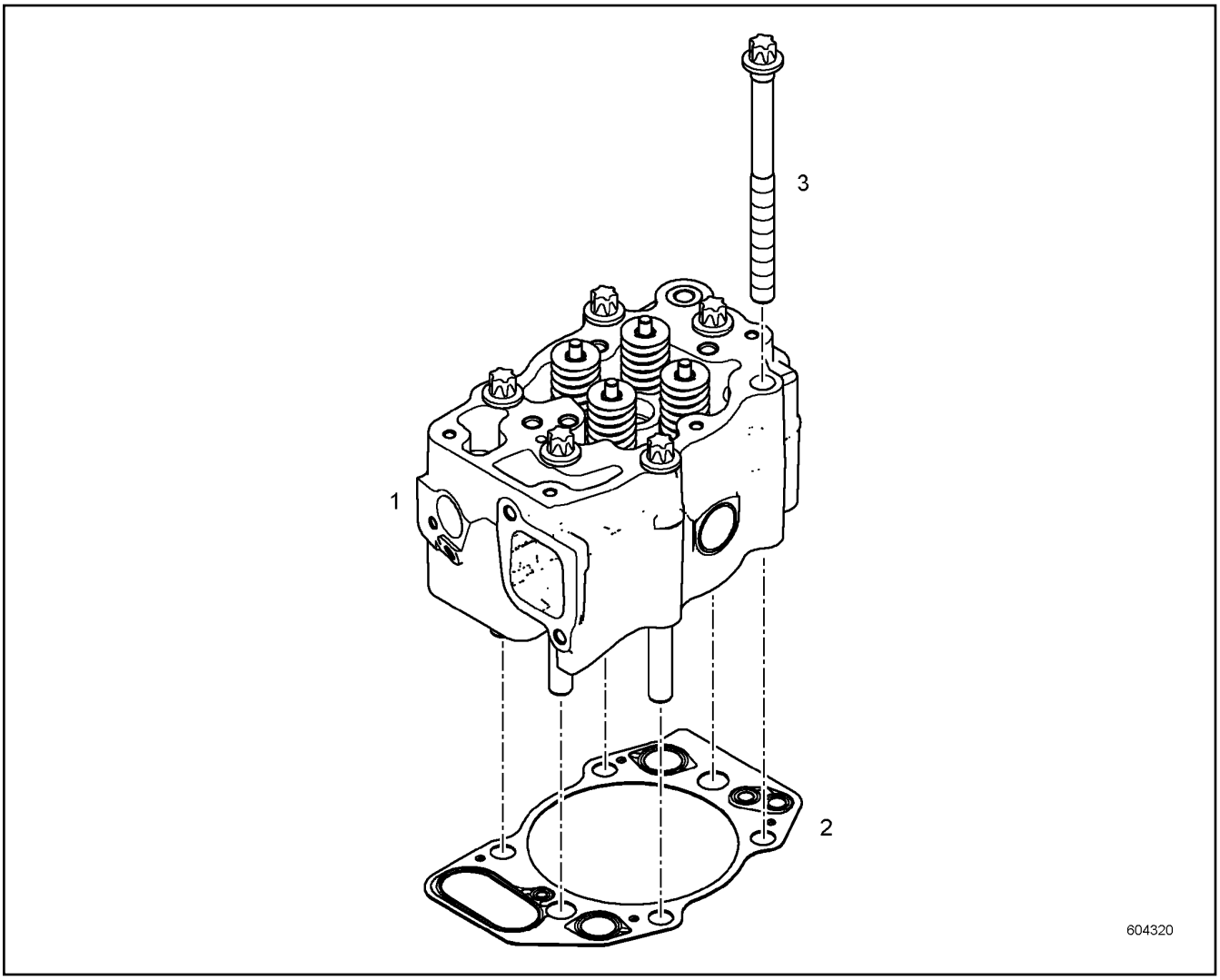

Pos.	Item	Quantity	Description	Bezeichnung	Serie	K
1	10145864	1	CYLINDER HEAD PRE-ASSY.	ZYLINDERKOPF VORM.		
2	10133667	1	CYLINDER HEAD GASKET	ZYLINDERKOPFDICHTUNG		
3	10125439	6	HEXALOBULAR HEAD SCREW M16X210 10.9	SECHSRUNDSCHRAUBE		

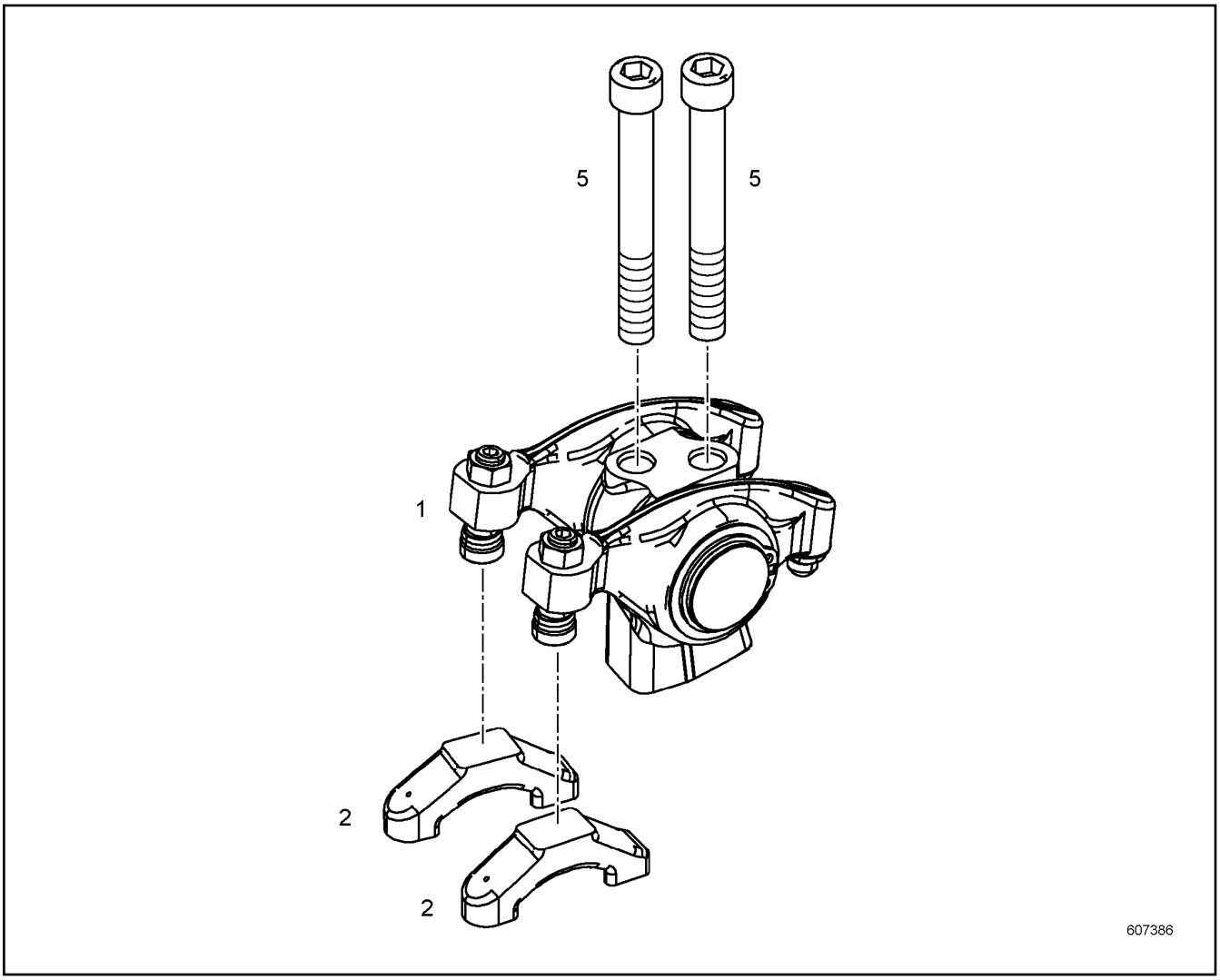

Pos.	Item	Quantity	Description	Bezeichnung	Serie	K
1	11448005	1	ROCKER ARM BRACKET PRE-ASS. ⇨ ❑ 246	KIPPHEBELBOCK VORM.		
2	10119695	2	VALVE BRIDGE	VENTILBRUECKE		
5	4600385	2	SOCKET HEAD SCREW ISO 4762 M12X100 10.	ZYLINDERSCHRAUBE		

OHNE BILD
WITHOUT ILLUSTRATION
SANS PLANCHE
SIN FIG.
SEM ILUSTRAÇÃO
БЕЗ ИЗОБРАЖЕНИЯ

600000

Pos.	Item	Quantity	Description	Bezeichnung	Serie	K
2	11448000	2	ROCKER ARM PRE-ASSY.	KIPPHEBEL VORM.		
3	10012557	2	HEX NUT M10X1 8	SECHSKANTMUTTER		
5	10012225	2	ADJUSTING SCREW M10X1	EINSTELLSCHRAUBE		
6	9078522	2	WASHER 34X45X1	SCHEIBE		
7	428011301	2	LOCKING RING DIN 471 34X1.5	SICHERUNGSRING		
8	10036325	1	SEALING PLUG	DICHTSTOPFEN		

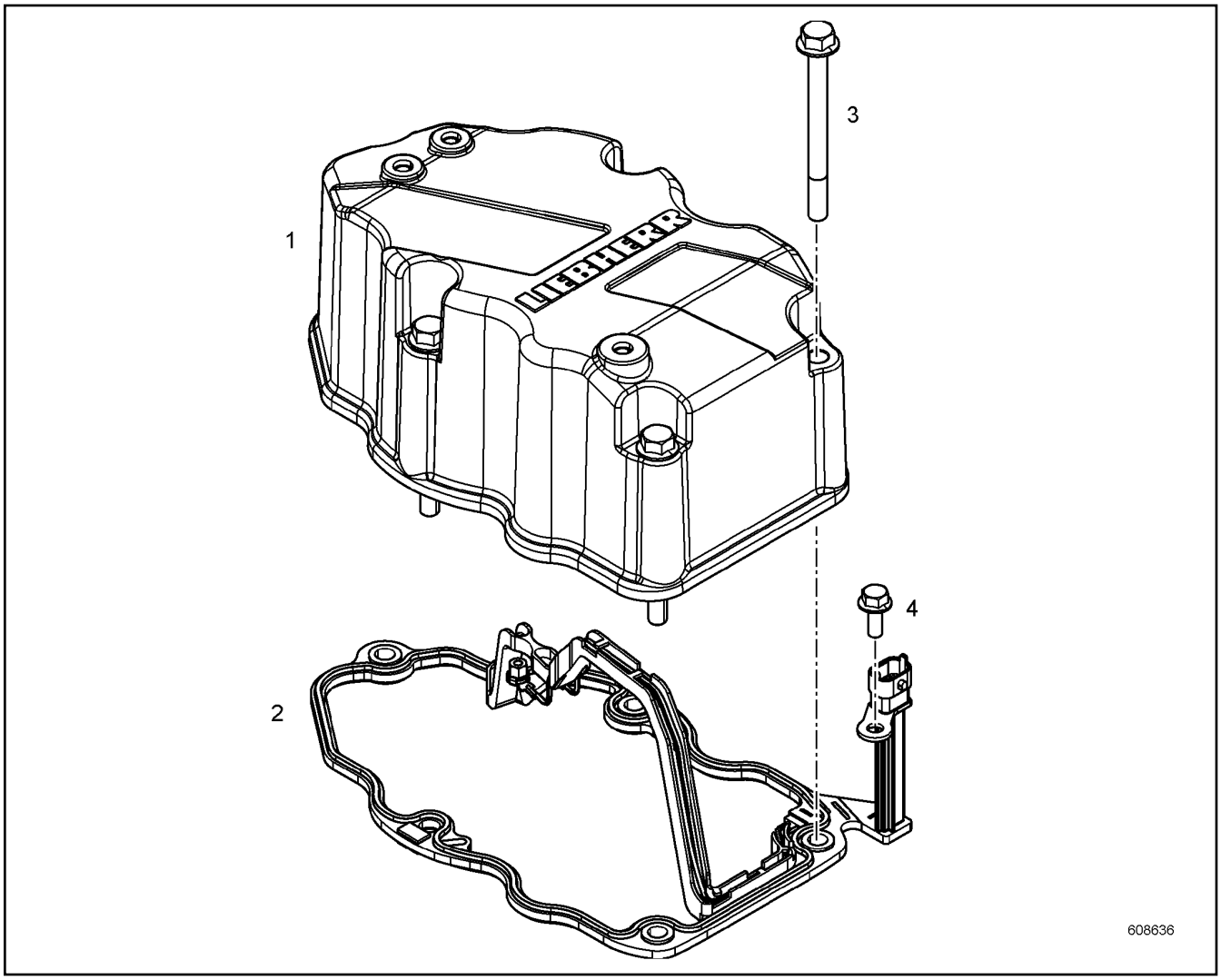

Pos.	Item	Quantity	Description	Bezeichnung	Serie	K
1	10134750	1	CYLINDER HEAD COVER	ZYLINDERKOPFDECKEL		
2	10126510	1	SEAL	DICHTUNG		
3	10100303	5	HEX SCREW EN 1665 M8X90 8.8	SECHSKANTSCHRAUBE		
4	407350208	1	HEX SCREW EN 1665 M6X16 8.8	SECHSKANTSCHRAUBE		

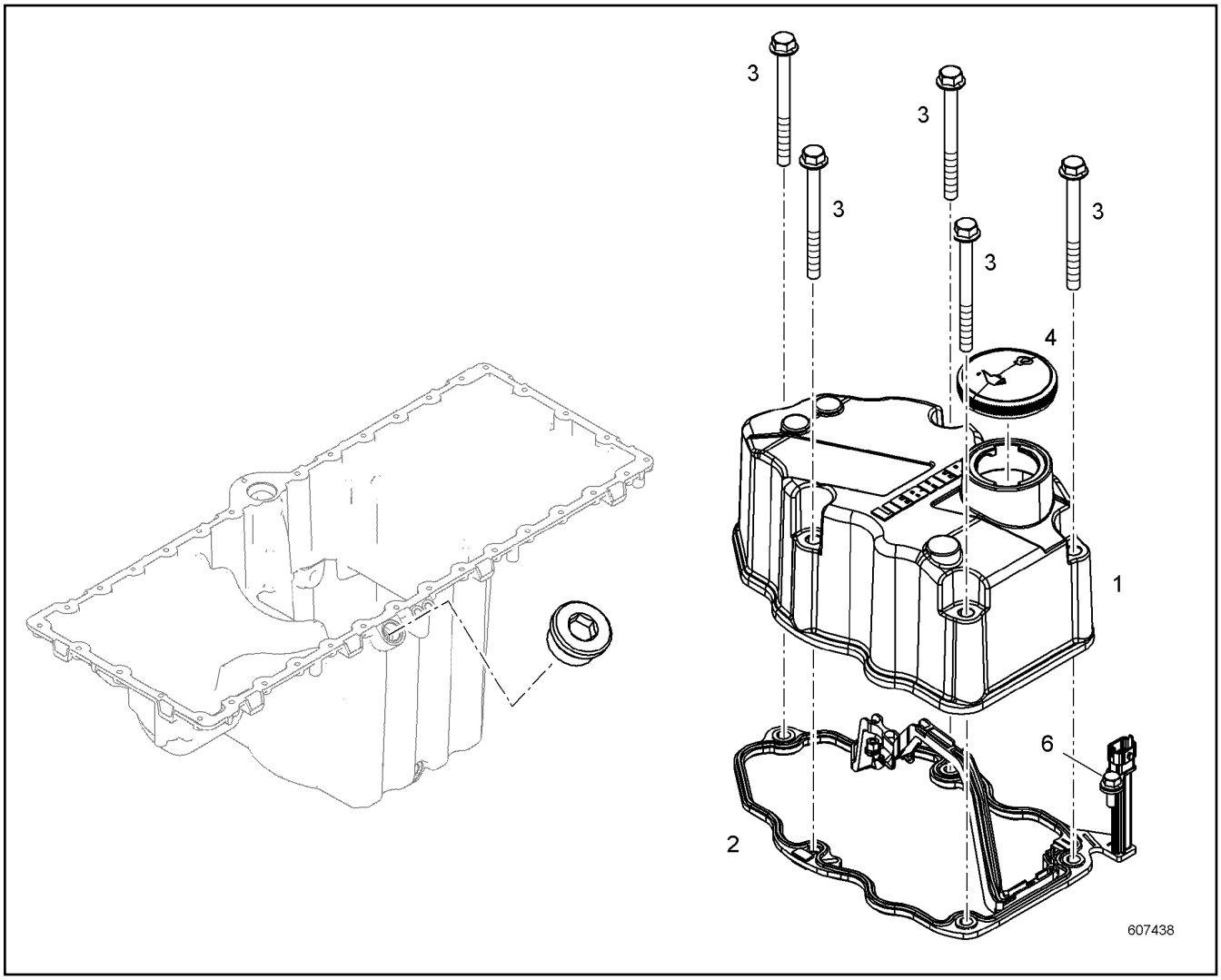

Pos.	Item	Quantity	Description	Bezeichnung	Serie	K
1	10134698	1	CYLINDER HEAD COVER	ZYLINDERKOPFDECKEL		
2	10126510	1	SEAL	DICHTUNG		
3	10100303	5	HEX SCREW EN 1665 M8X90 8.8	SECHSKANTSCHRAUBE		
4	9144757	1	END COVER ⇨ ❑ 249	VERSCHLUSSDECKEL		
6	407350208	1	HEX SCREW EN 1665 M6X16 8.8	SECHSKANTSCHRAUBE		

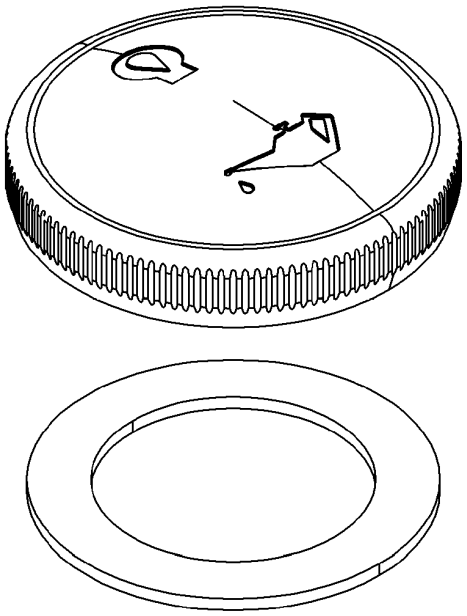

608125

Pos.	Item	Quantity	Description	Bezeichnung	Serie	K
3	9144762	1	SEAL	DICHTUNG		

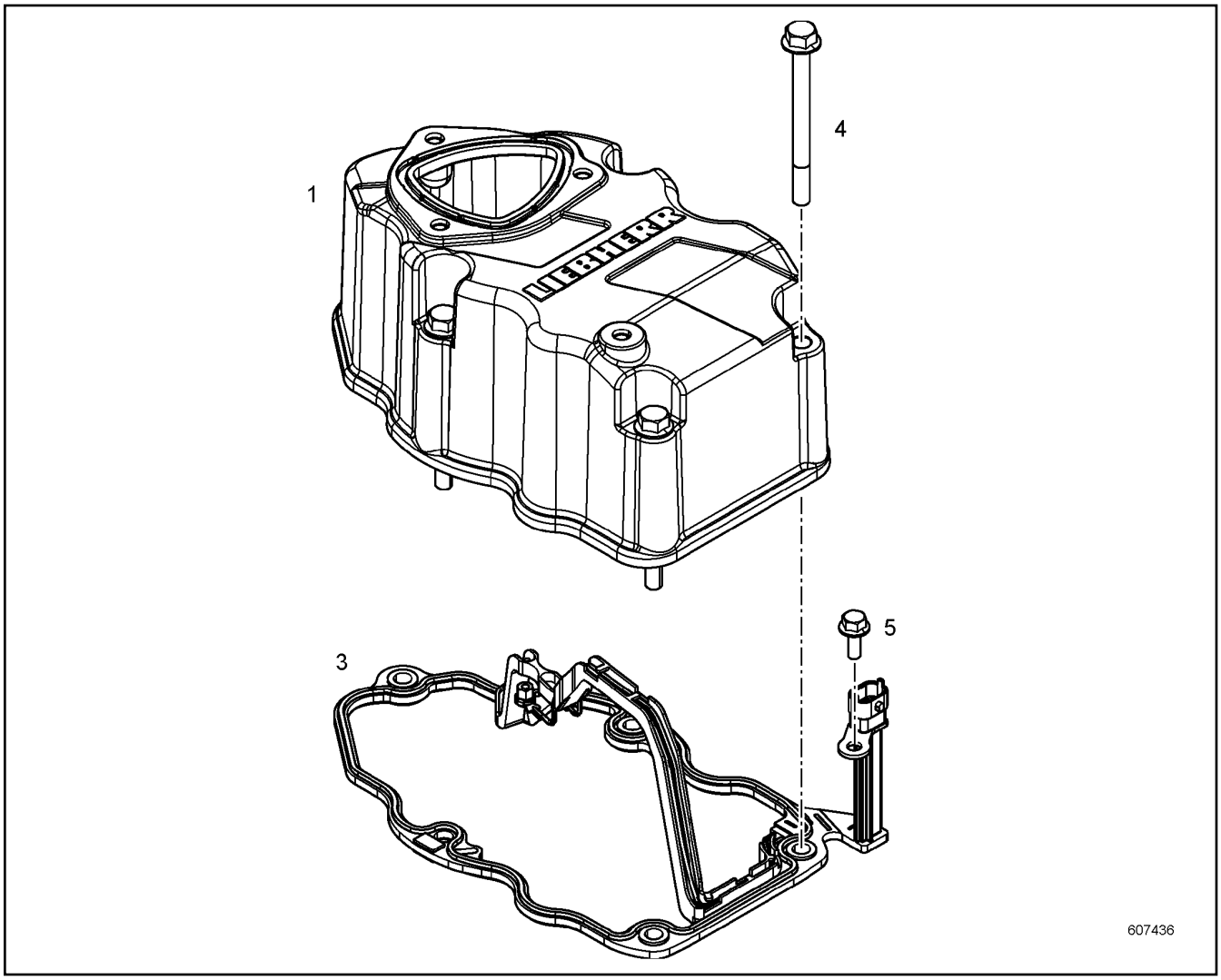

Pos.	Item	Quantity	Description	Bezeichnung	Serie	K
1	10134695	1	CYLINDER HEAD COVER	ZYLINDERKOPFDECKEL		
3	10126510	1	SEAL	DICHTUNG		
4	10100303	5	HEX SCREW EN 1665 M8X90 8.8	SECHSKANTSCHRAUBE		
5	407350208	1	HEX SCREW EN 1665 M6X16 8.8	SECHSKANTSCHRAUBE		

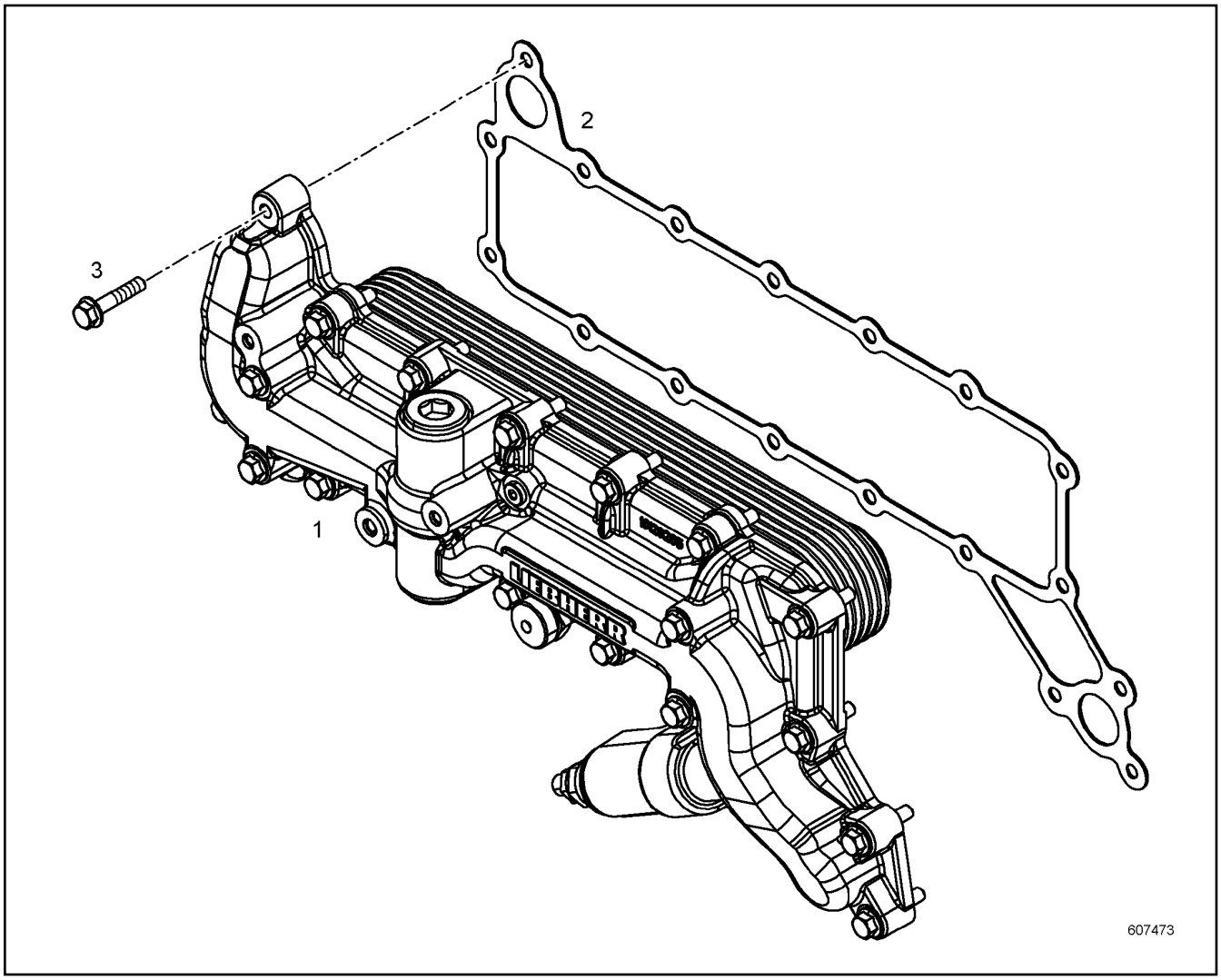

Pos.	Item	Quantity	Description	Bezeichnung	Serie	K
1	10129480	1	OIL COOLER, PRE-ASSEMBLED ⇨ ❑ 252	OELKUEHLER VORM.		
2	10117891	1	SEAL	DICHTUNG		
3	10218013	18	HEX SCREW DIN 6921 M8X55 8.8	SECHSKANTSCHRAUBE		

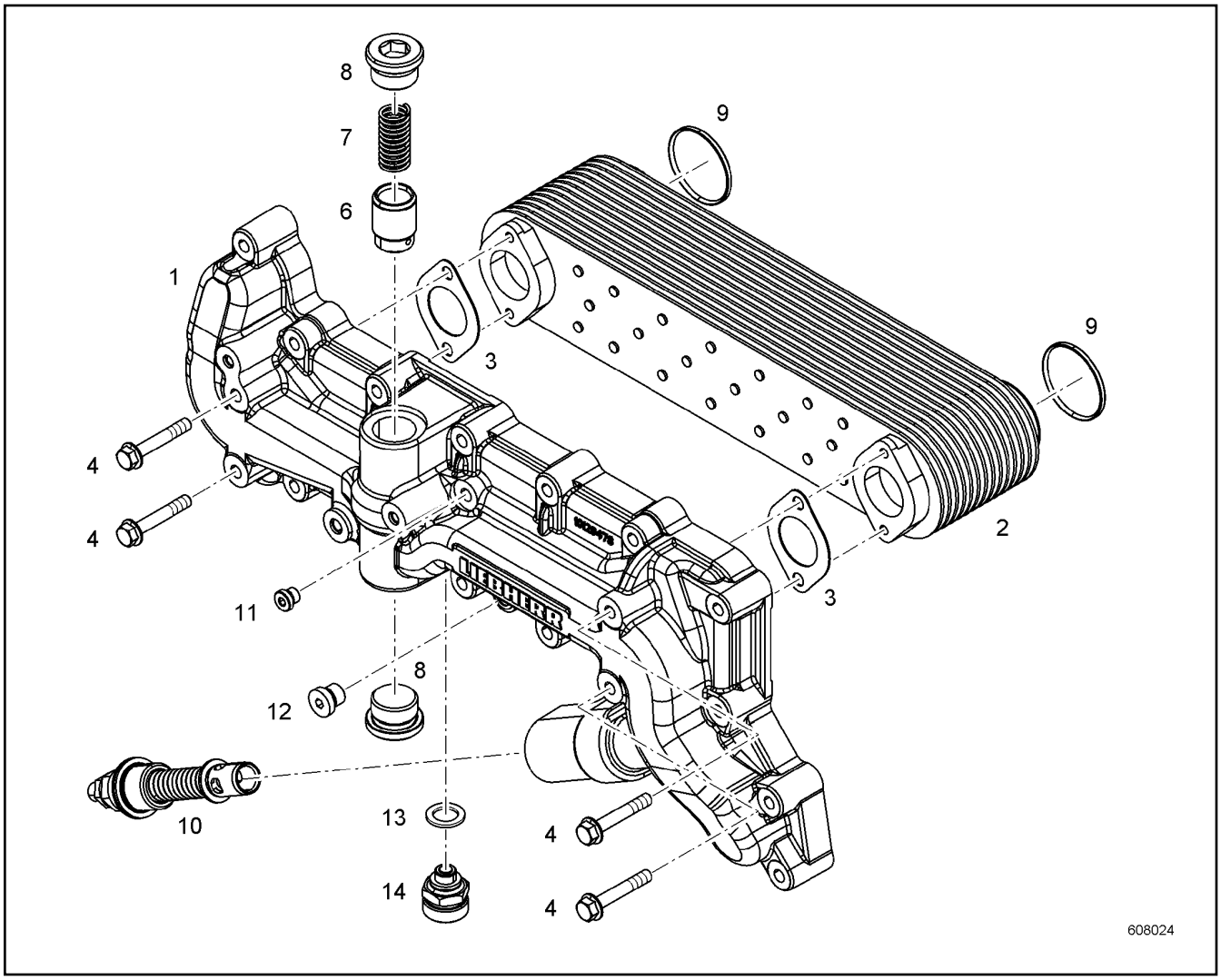

Pos.	Item	Quantity	Description	Bezeichnung	Serie	K
1	10129479	1	OIL COOLER HOUSING	OELKUEHLERGEHAEUSE		
2	5700088	1	OIL COOLER	OELKUEHLER		
3	10119923	2	SEAL	DICHTUNG		
4	10005073	4	HEX SCREW EN 1665 M8X50 8.8	SECHSKANTSCHRAUBE		
6	9886591	1	PISTON	KOLBEN		
7	9886756	1	PRESSURE SPRING	DRUCKFEDER		
8	7382204	2	SCREW PLUG	VERSCHLUSSSCHRAUBE		
9	7380955	2	O-RING	O-RING		
10	10152592	1	OVERPRESSURE VALVE ⇨ ❑ 253	UEBERDRUCKVENTIL		
11	7381638	1	SCREW PLUG	VERSCHLUSSSCHRAUBE		
12	7380566	1	SCREW PLUG	VERSCHLUSSSCHRAUBE		
13	7381225	1	SEALING RING	DICHTRING		
14	10011832	1	VALVE	VENTIL		

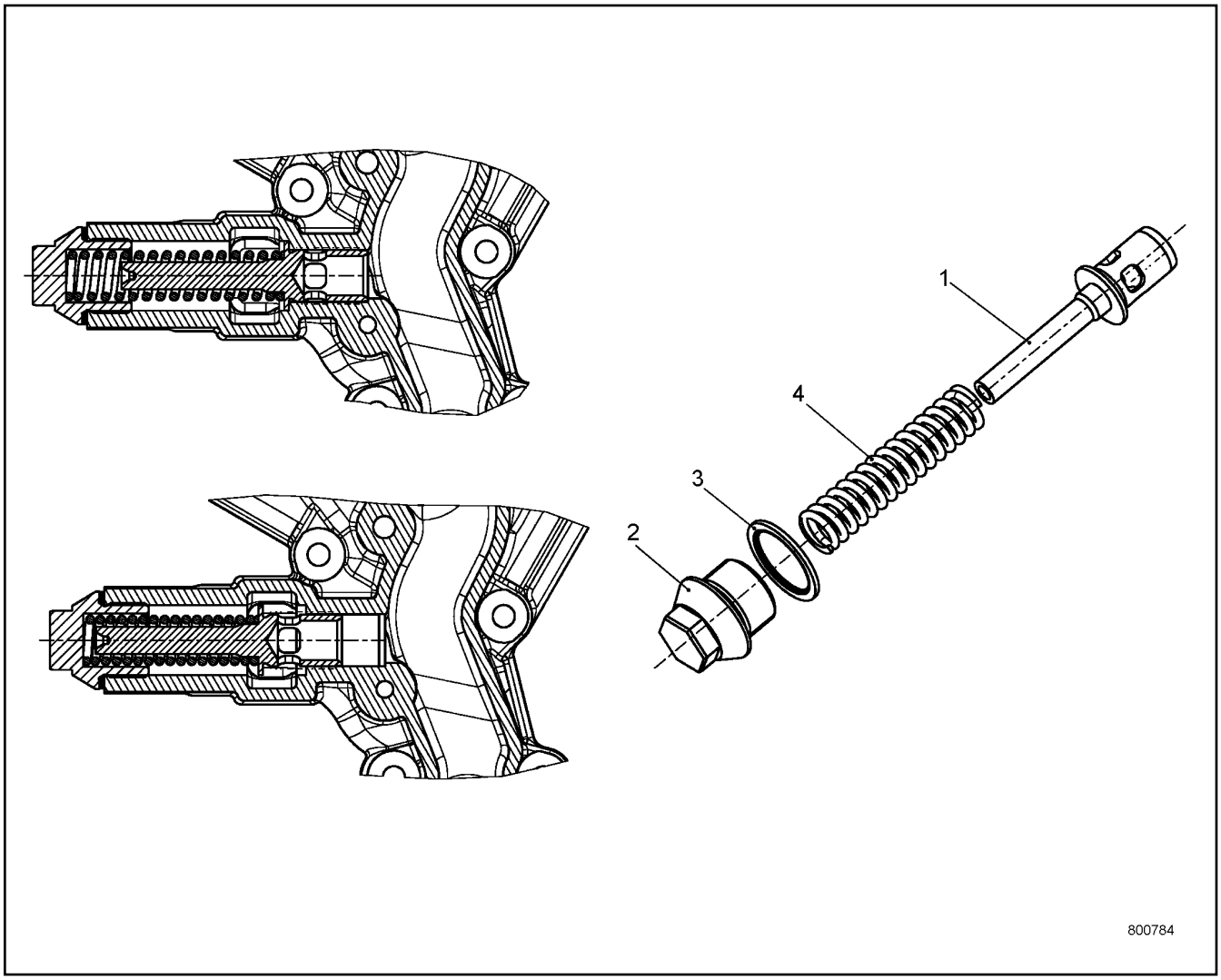

Pos.	Item	Quantity	Description	Bezeichnung	Serie	K
1	10152593	1	PISTON	KOLBEN		
2	10152594	1	SCREW PLUG M30X40 ETG 100	VERSCHLUSSSCHRAUBE		
3	10113731	1	SEALING RING	DICHTRING		
4	10129501	1	PRESSURE SPRING	DRUCKFEDER		

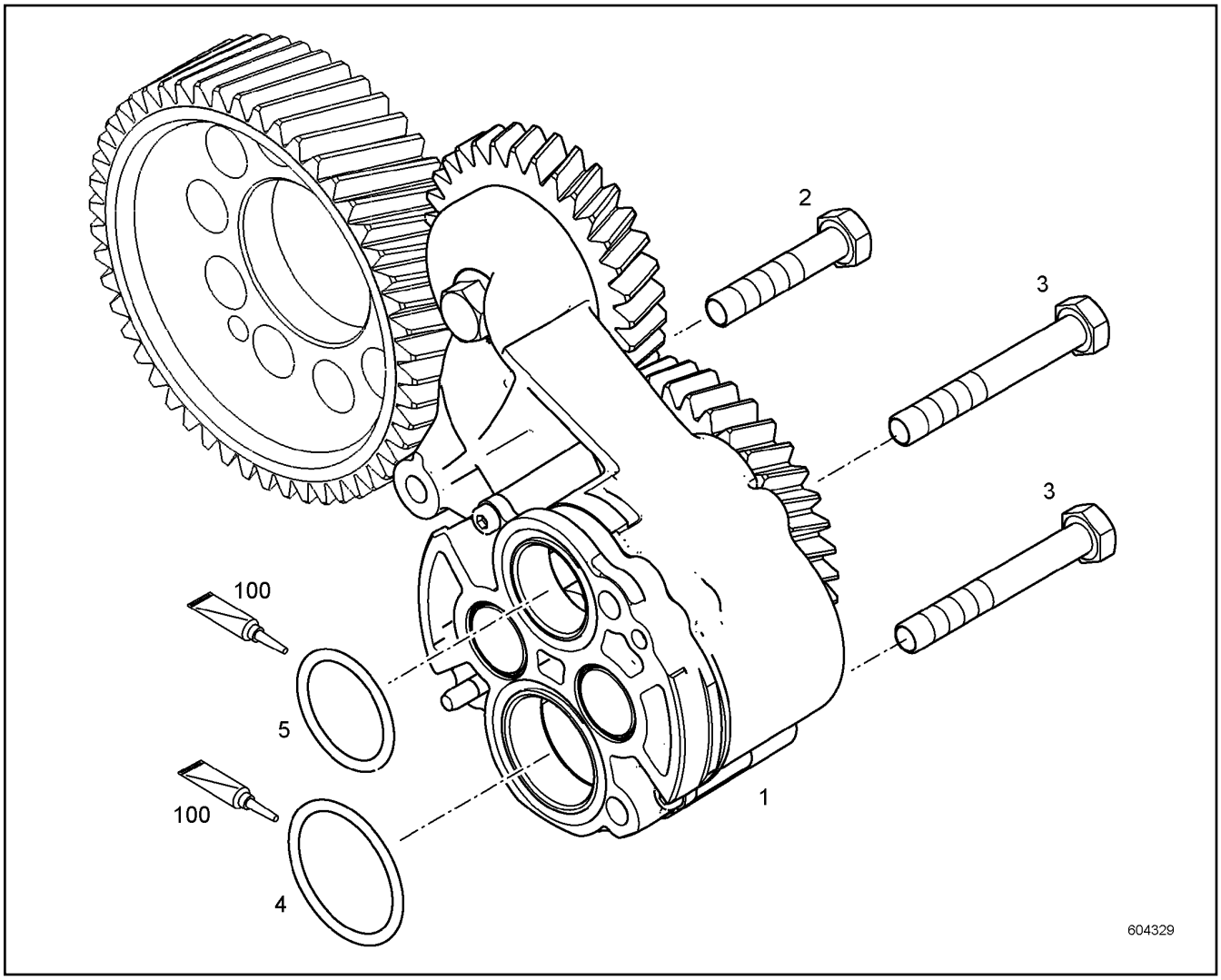

Pos.	Item	Quantity	Description	Bezeichnung	Serie	K
1	10138565	1	LUBRICATING OIL PUMP	SCHMIEROELPUMPE		
2	10005713	1	HEX SCREW DIN 6921 M8X45 8.8	SECHSKANTSCHRAUBE		
3	11066361	2	HEX SCREW DIN 6921 M8X90 8.8	SECHSKANTSCHRAUBE		
4	11066168	1	O-RING	O-RING		
5	7382059	1	O-RING	O-RING		
100	10282622	1	GREASE	FETT		

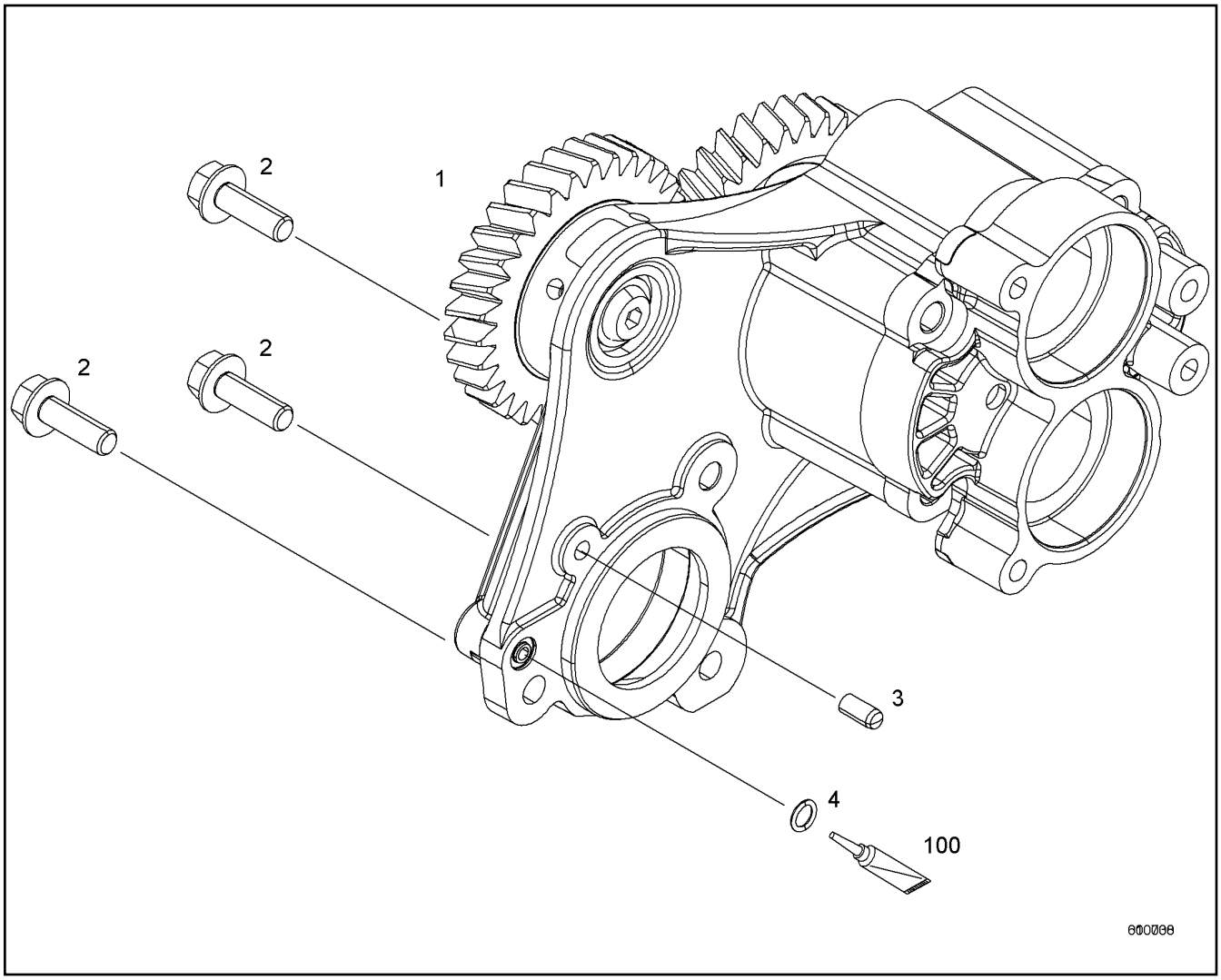

Pos.	Item	Quantity	Description	Bezeichnung	Serie	K
1	10133823	1	SUCTION PUMP PRE-ASS. ⇨ ❑ 256	ABSAUGPUMPE VORM.		
2	11004752	3	HEX SCREW DIN 6921 M8X25 8.8	SECHSKANTSCHRAUBE		
3	4980000	1	PARALLEL PIN ISO 8734 6M6X14 ST	ZYLINDERSTIFT		
4	7381685	1	O-RING	O-RING		
100	10285708	1	GREASE	FETT		

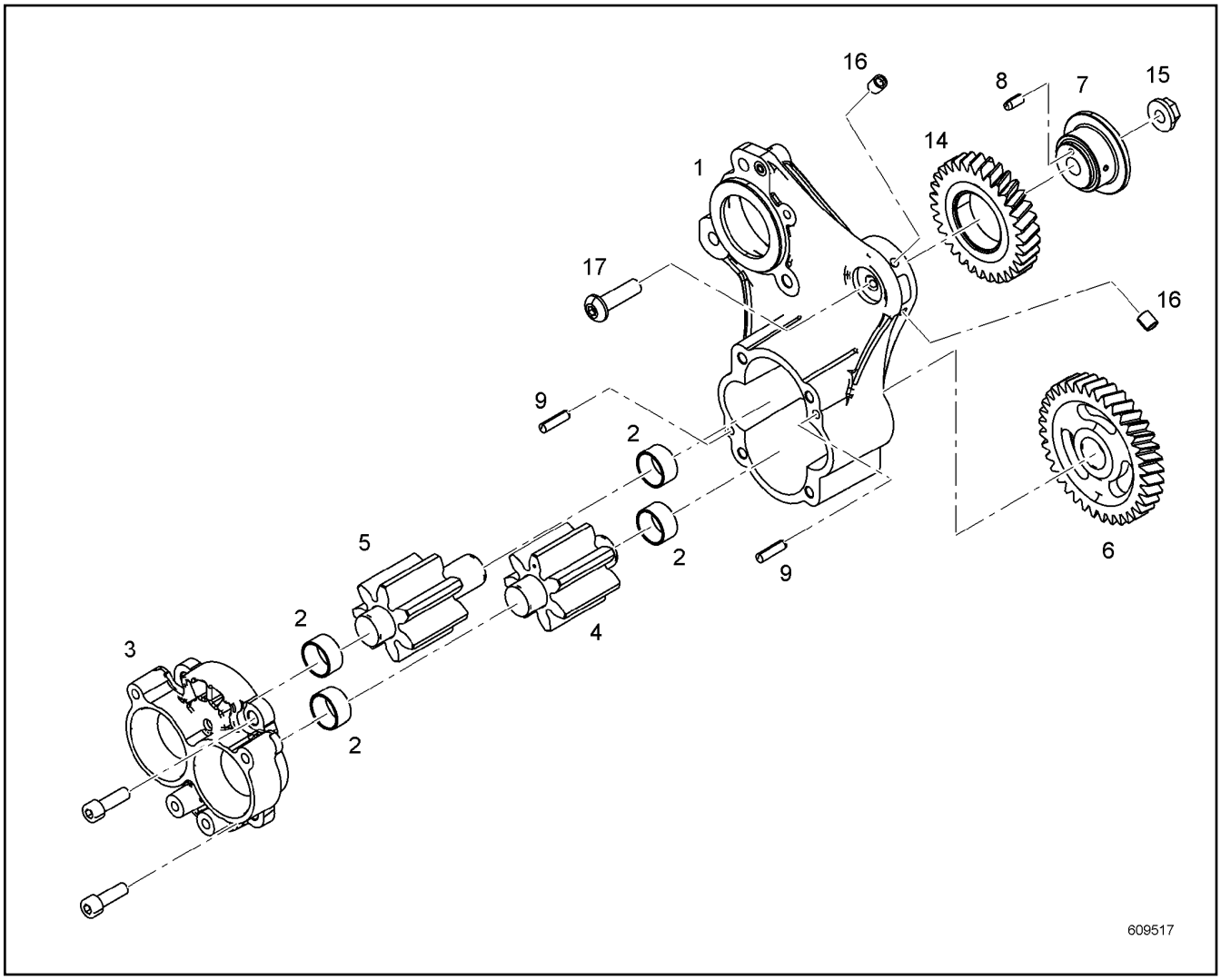

Pos.	Item	Quantity	Description	Bezeichnung	Serie	K
1	10132069	1	PUMP HOUSING	PUMPENGEHAEUSE		
2	10121971	4	BEARING BUSHING 22X25X13	LAGERBUCHSE		
3	10132074	1	CONNECTION FLANGE	ANSCHLUSSFLANSCH		
4	10121983	1	GEAR WHEEL	ZAHNRAD		
5	10121982	1	GEAR WHEEL	ZAHNRAD		
6	10133684	1	GEAR WHEEL	ZAHNRAD		
7	10120188	1	HUB	NABE		
8	4901104	1	PARALLEL PIN ISO 8734 4M6X10 ST	ZYLINDERSTIFT		
9	10011777	2	PARALLEL PIN 8M6X24 ST 2 K 50	ZYLINDERSTIFT		
14	9072633	1	INTERMEDIATE GEAR PRE-ASSY.	ZWISCHENRAD VORM.		
15	4980805	1	HEX NUT EN 1661 M10 8	SECHSKANTMUTTER		
16	7380779	2	SEALING PLUG	DICHTSTOPFEN		
17	10112497	1	HEX SCREW DIN 6921 M10X40 8.8	SECHSKANTSCHRAUBE		

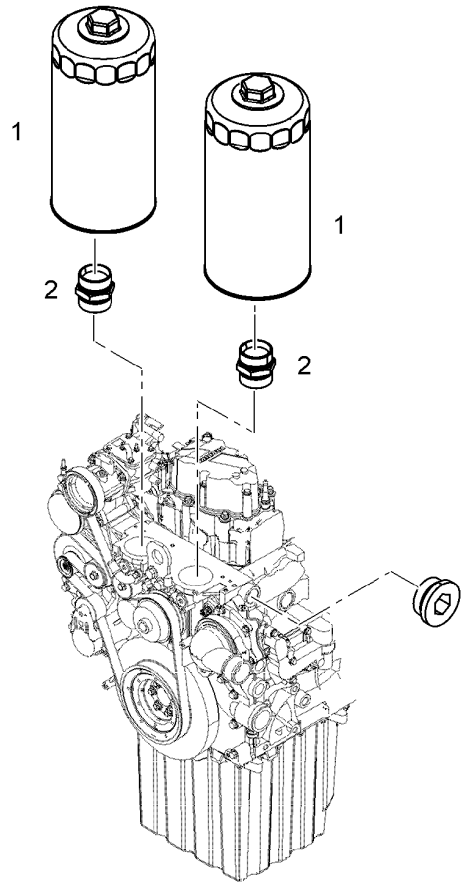

Pos.	Item	Quantity	Description	Bezeichnung	Serie	K
1	10297295	2	EASY-CHANGE FILTER	WECHSELFILTER		
2	9273271	2	FITTINGS	STUTZEN		
105	8655016	1	SCREW LOCKING	SCHRAUBENSICHERUNG		

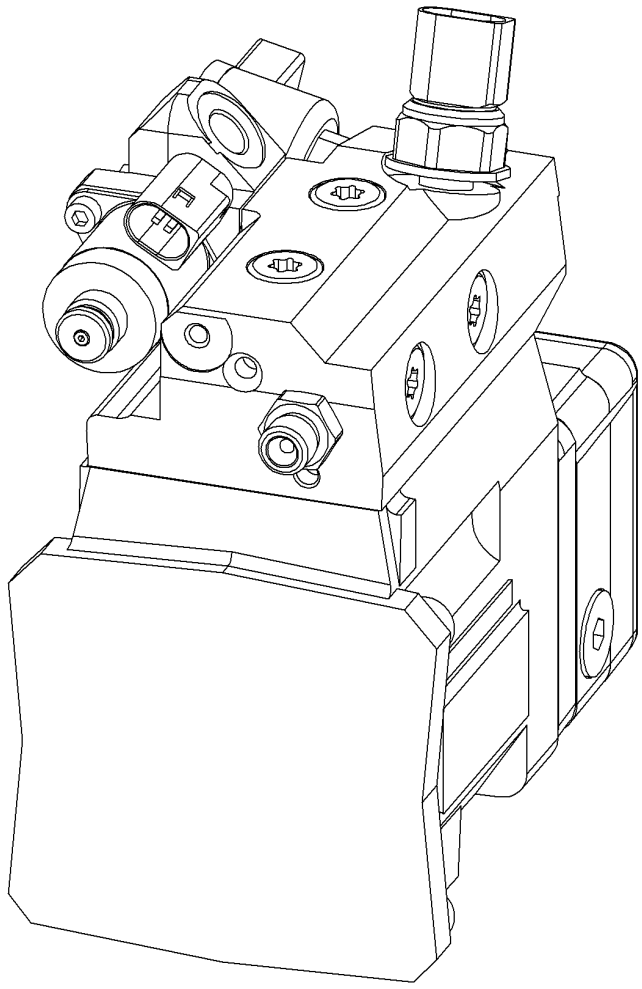

Pos.	Item	Quantity	Description	Bezeichnung	Serie	K
1	10150743	1	RK HIGH PRESSURE PUMP ⇨ ❑ 259	RS HOCHDRUCKPUMPE		
2	4001622	4	SOCKET HEAD SCREW ISO 4762 M10X55 10.9	ZYLINDERSCHRAUBE		
200	10150743	1	RK HIGH PRESSURE PUMP ⇨ ❑ 259	RS HOCHDRUCKPUMPE		
210	10152787	1	SEAL KIT HIGH PRESSURE PUMP ⇨ ❑ 260	DS HOCHDRUCKPUMPE		
220	10149198	1	RK PRE-FEED PUMP	RS VORFOERDERPUMPE		
230	12401396	1	VOLUM CONTROL VALVE	SAUGDROSSELVENTIL		

OHNE BILD
WITHOUT ILLUSTRATION
SANS PLANCHE
SIN FIG.
SEM ILUSTRAÇÃO
БЕЗ ИЗОБРАЖЕНИЯ

600000

Pos.	Item	Quantity	Description	Bezeichnung	Serie	K
2	4001622	4	SOCKET HEAD SCREW ISO 4762 M10X55 10.9	ZYLINDERSCHRAUBE		
4	10152787	1	SEAL KIT HIGH PRESSURE PUMP ⇨ ❑ 260	DS HOCHDRUCKPUMPE		
5	10149198	1	RK PRE-FEED PUMP	RS VORFOERDERPUMPE		

OHNE BILD
WITHOUT ILLUSTRATION
SANS PLANCHE
SIN FIG.
SEM ILUSTRAÇÃO
БЕЗ ИЗОБРАЖЕНИЯ

600000

Pos.	Item	Quantity	Description	Bezeichnung	Serie	K
1	10128671	1	O-RING	O-RING		
2	10128559	1	O-RING	O-RING		
3	10128678	1	O-RING	O-RING		
4	11002988	1	FITTING	VERSCHRAUBUNG		
5	10011865	2	SEALING RING	DICHTRING		
6	10011868	4	SEALING RING	DICHTRING		

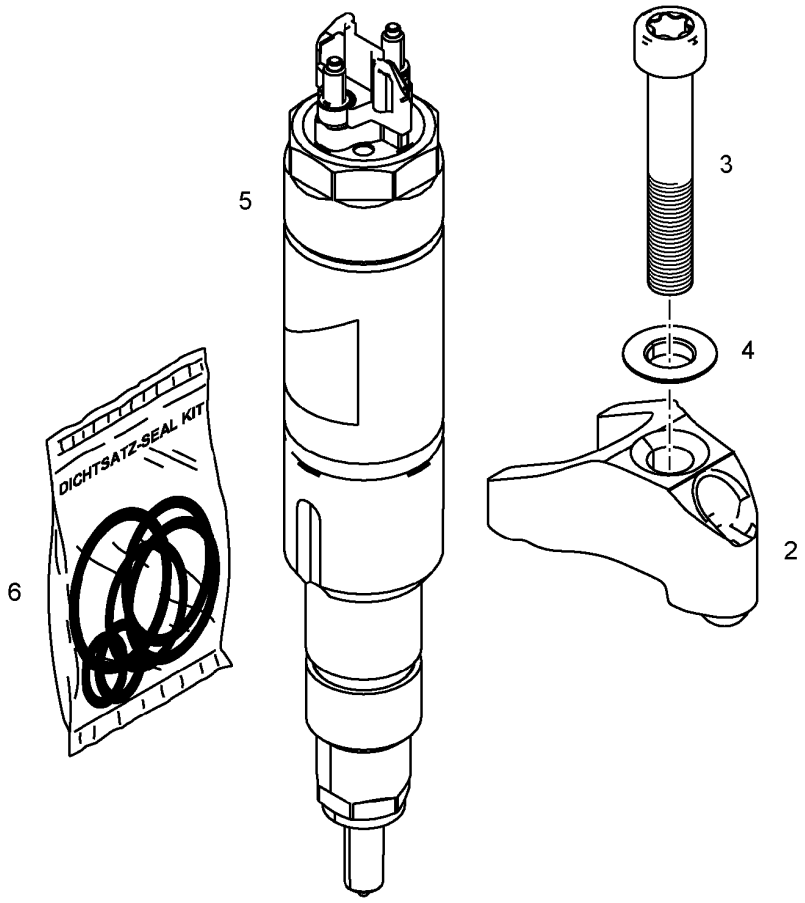

Pos.	Item	Quantity	Description	Bezeichnung	Serie	K
2	11403994	1	JAW	PRATZE		
3	11082116	1	SOCKET HEAD SCREW ISO 14580 M8X50 10.9	ZYLINDERSCHRAUBE		
4	10036473	1	SPHERICAL WASHER DIN 6319 8.4X17X3.2 ST	KUGELSCHEIBE		
200	10152874	1	RK INJECTOR	RS INJEKTOR		
210	10141215	1	SEAL KIT INJECTOR	DS INJEKTOR		

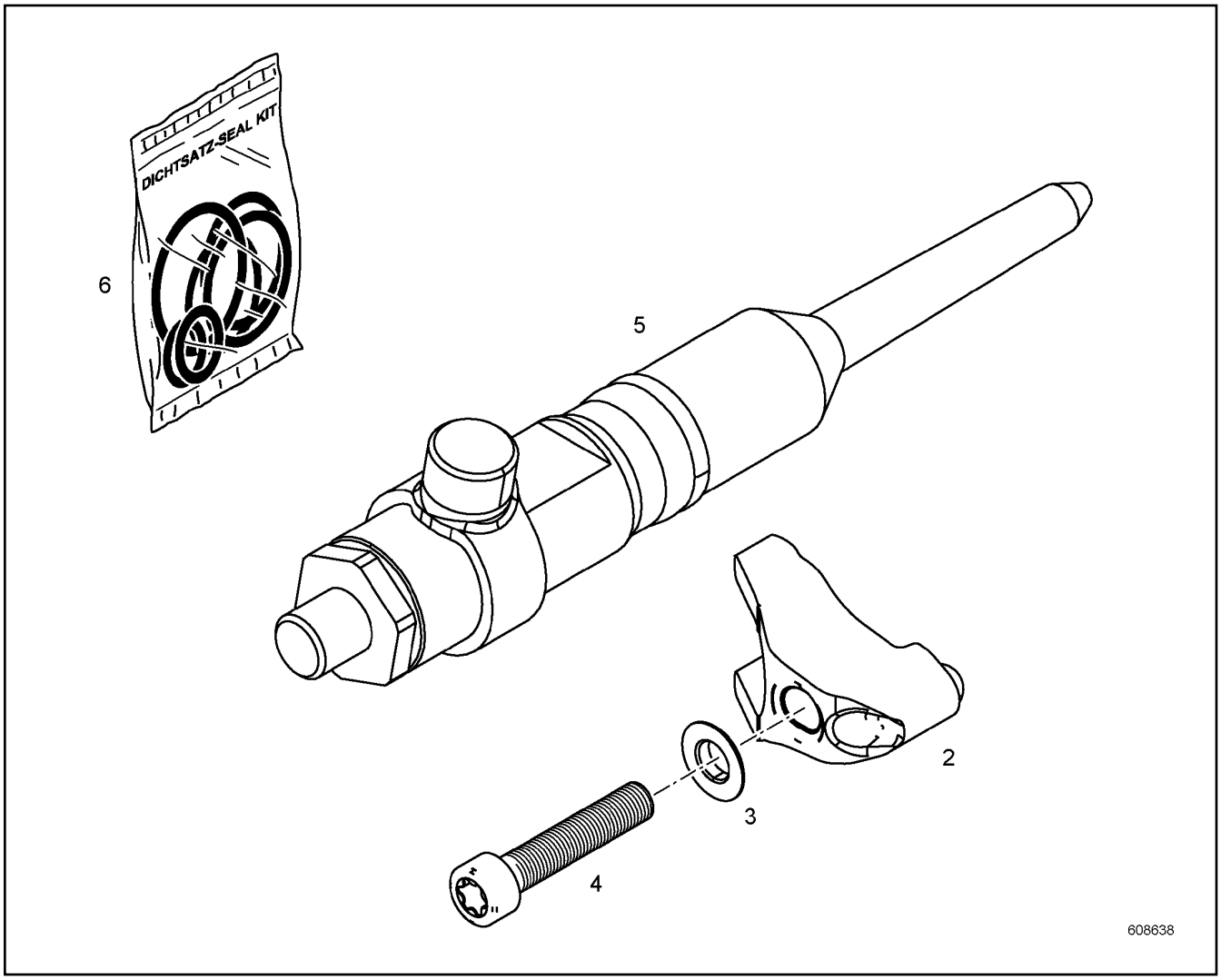

Pos.	Item	Quantity	Description	Bezeichnung	Serie	K
2	10150144	1	JAW	PRATZE		
3	11622278	1	SPHERICAL WASHER DIN 6319 C8.4X17X3.2	KUGELSCHEIBE		
4	11600879	1	SOCKET HEAD SCREW ISO 14579 M8X40 10.9	ZYLINDERSCHRAUBE		
200	10141140	1	RK HIGH PRESSURE CONNECTOR ⇨ ❑ 263	RS DRUCKROHRSTUTZEN		
210	10141216	1	SEAL KIT HIGH PRESS.CONNECTOR	DS DRUCKROHRSTUTZEN		

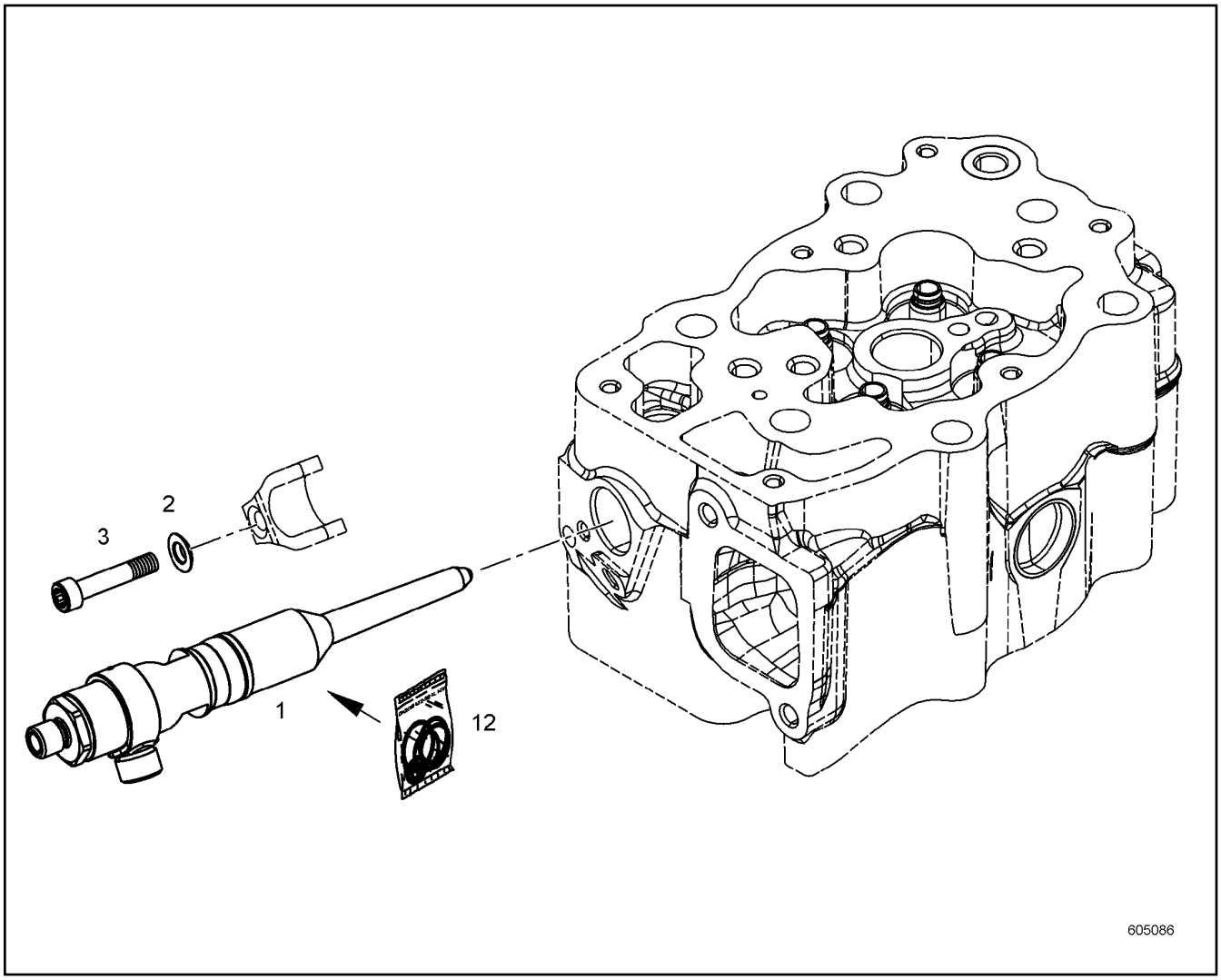

Pos.	Item	Quantity	Description	Bezeichnung	Serie	K
1	10135080	1	HIGH PRESSURE CONNECTOR ⇨ ❑ 264	DRUCKROHRSTUTZEN		
2	10036473	1	SPHERICAL WASHER DIN 6319 8.4X17X3.2 ST	KUGELSCHEIBE		
3	11600879	1	SOCKET HEAD SCREW ISO 14579 M8X40 10.9	ZYLINDERSCHRAUBE		
12	10141216	1	SEAL KIT HIGH PRESS.CONNECTOR	DS DRUCKROHRSTUTZEN		

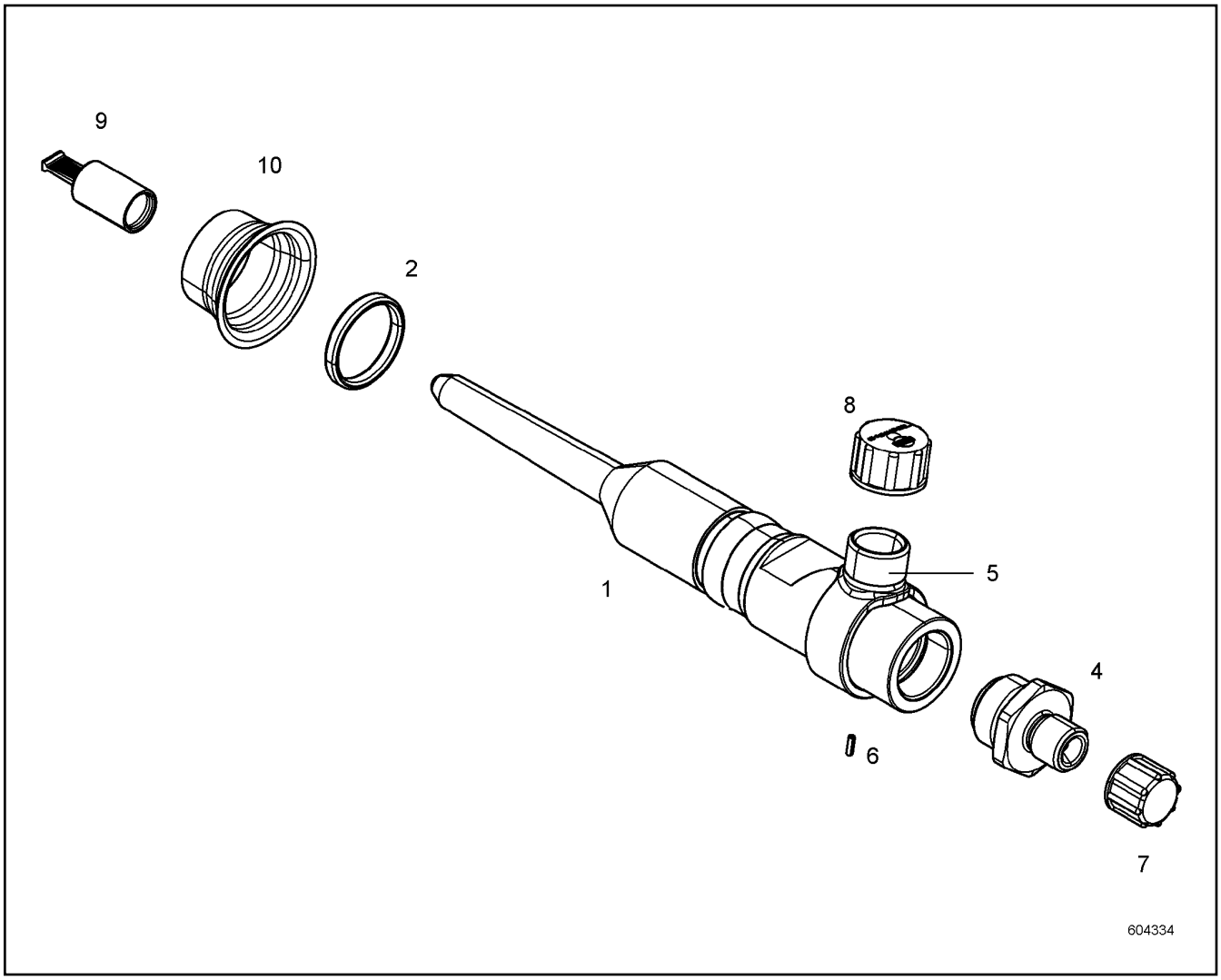

Pos.	Item	Quantity	Description	Bezeichnung	Serie	K
1	10131081	1	HIGH PRESSURE CONNECTOR	DRUCKROHRSTUTZEN		
2	10130757	1	O-RING	O-RING		
4	10128100	1	CONNECTION STUB	ANSCHLUSSSTUTZEN		
5	10129179	1	CLAMP	SCHELLE		
6	11001743	1	DOWEL PIN ISO 8752 2X6 ST	SPANNSTIFT		
7	10129382	1	COVER LID	ABDECKKAPPE		
8	779009008	1	SCREW CAP	SCHRAUBKAPPE		
9	11694640	1	HANDLE CAP	GRIFFKAPPE		
10	10129385	1	COVER LID	ABDECKKAPPE		

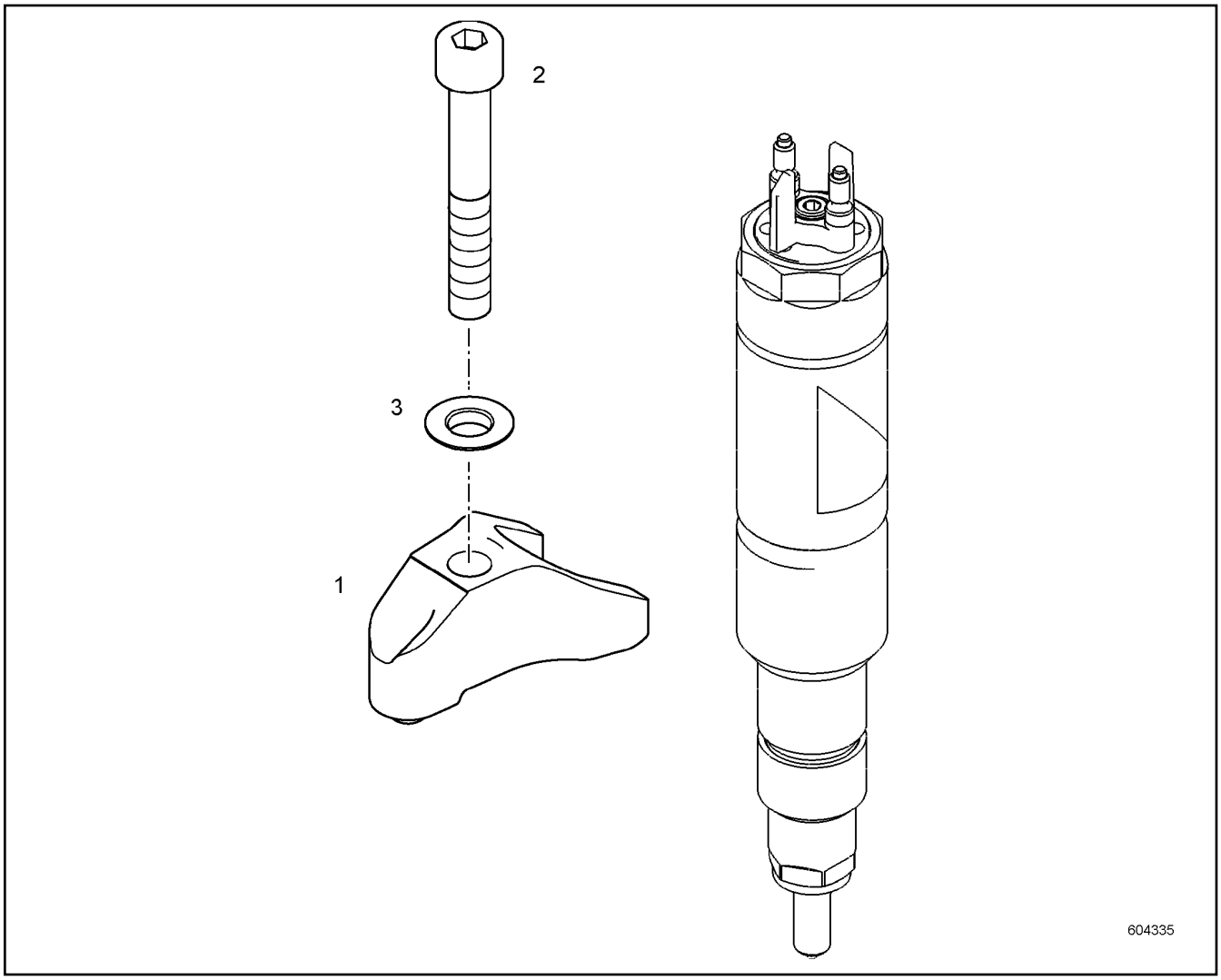

Pos.	Item	Quantity	Description	Bezeichnung	Serie	K
1	11403994	1	JAW	PRATZE		
2	11082116	1	SOCKET HEAD SCREW ISO 14580 M8X50 10.9	ZYLINDERSCHRAUBE		
3	10036473	1	SPHERICAL WASHER DIN 6319 8.4X17X3.2 ST	KUGELSCHEIBE		

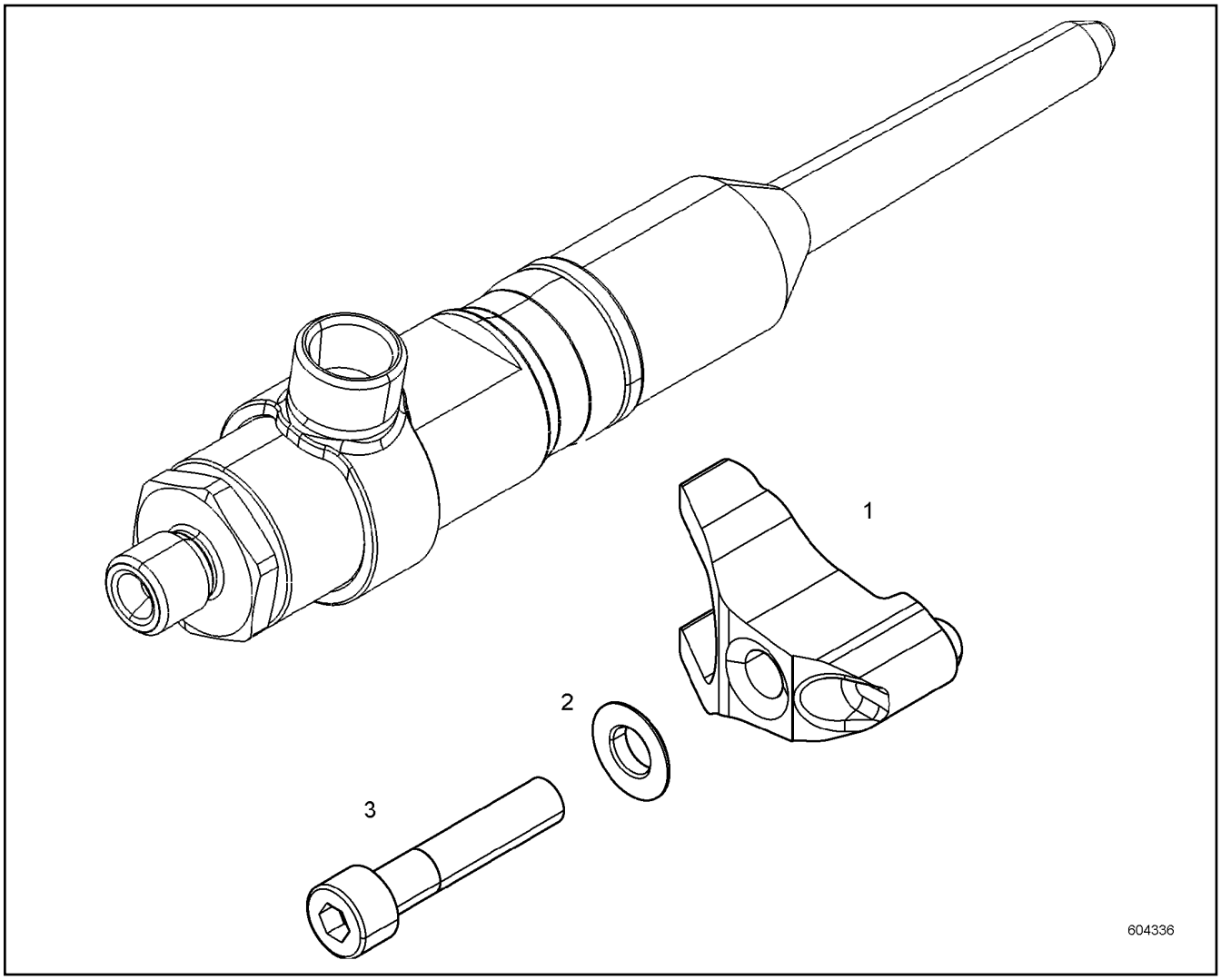

Pos.	Item	Quantity	Description	Bezeichnung	Serie	K
1	10146415	1	JAW	PRATZE		
2	11622278	1	SPHERICAL WASHER DIN 6319 C8.4X17X3.2	KUGELSCHEIBE		
3	11600879	1	SOCKET HEAD SCREW ISO 14579 M8X40 10.9	ZYLINDERSCHRAUBE		

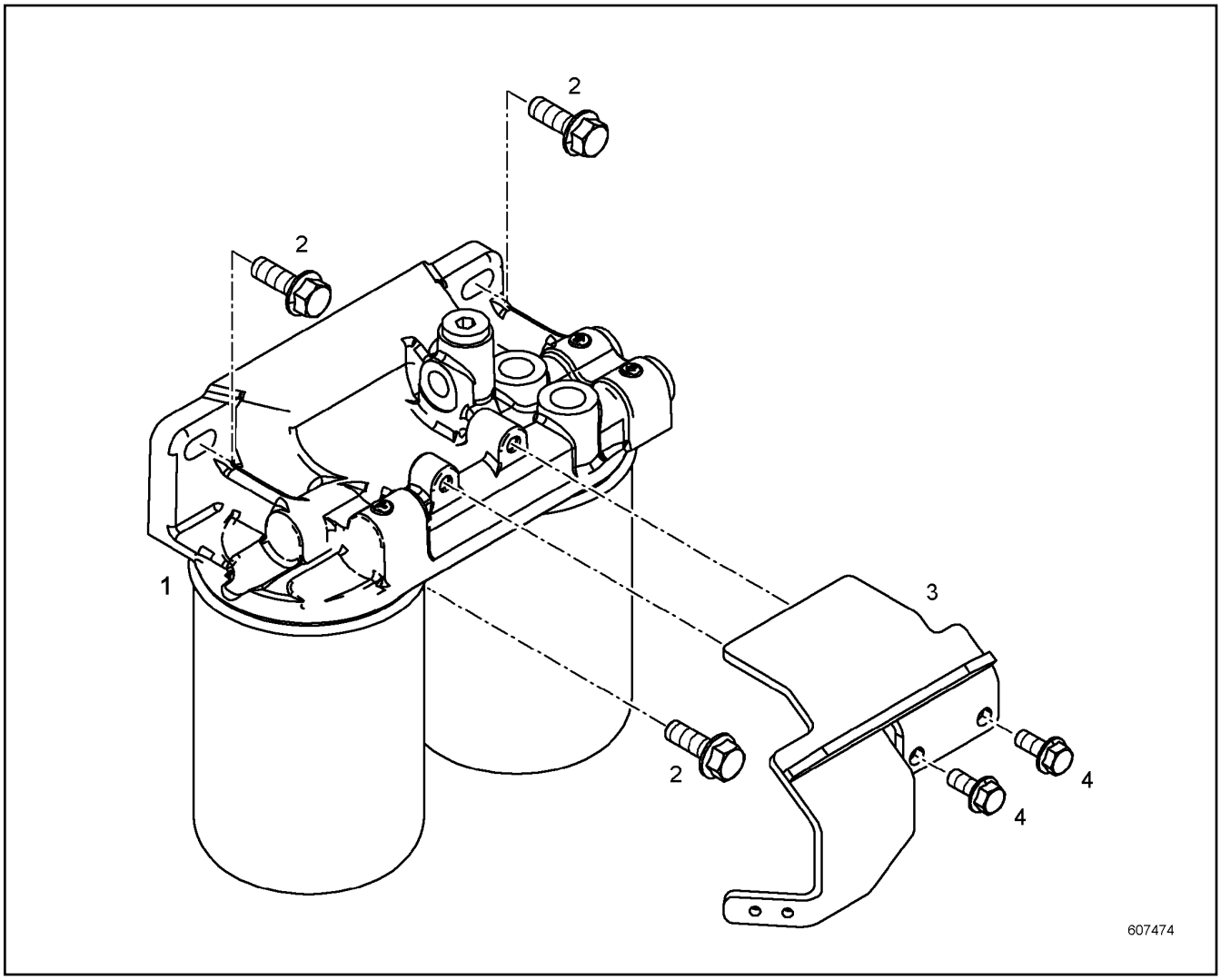

Pos.	Item	Quantity	Description	Bezeichnung	Serie	K
1	10146753	1	FUEL FINE FILTER ⇨ ❑ 268	KRAFTSTOFFFEINFILTER		
2	10333464	3	HEX SCREW DIN 6921 M10X35 8.8	SECHSKANTSCHRAUBE		
3	10138079	1	HOLDER	HALTER		
4	10016906	2	HEX SCREW EN 1665 M8X20 8.8	SECHSKANTSCHRAUBE		

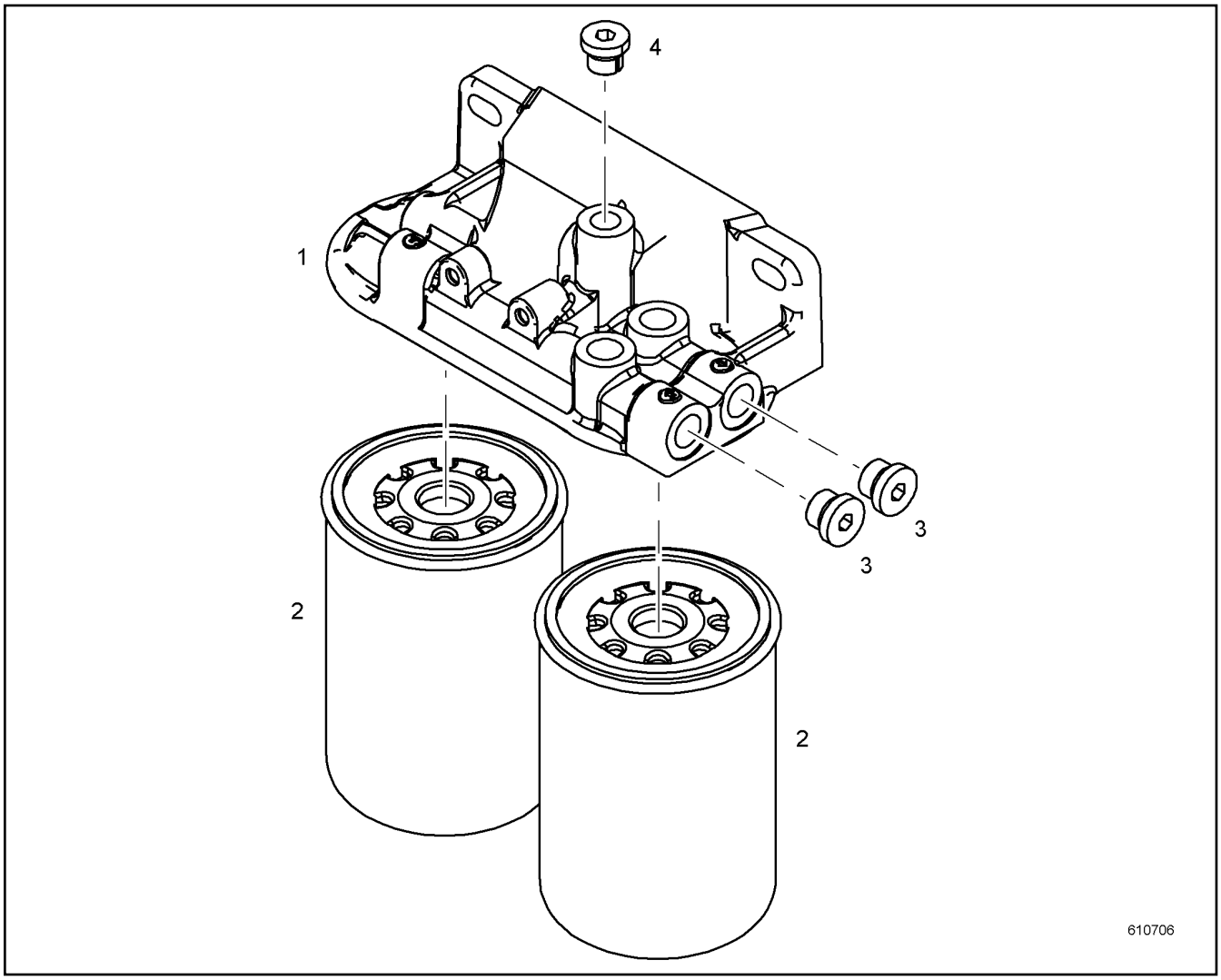

Pos.	Item	Quantity	Description	Bezeichnung	Serie	K
1	12455374	1	FILTER BRACKET	FILTERKONSOLE		
2	10429946	2	FUEL FINE FILTER	KRAFTSTOFFFEINFILTER		
3	7380688	2	SCREW PLUG	VERSCHLUSSSCHRAUBE		
4	10116078	1	SCREW PLUG	VERSCHLUSSSCHRAUBE		

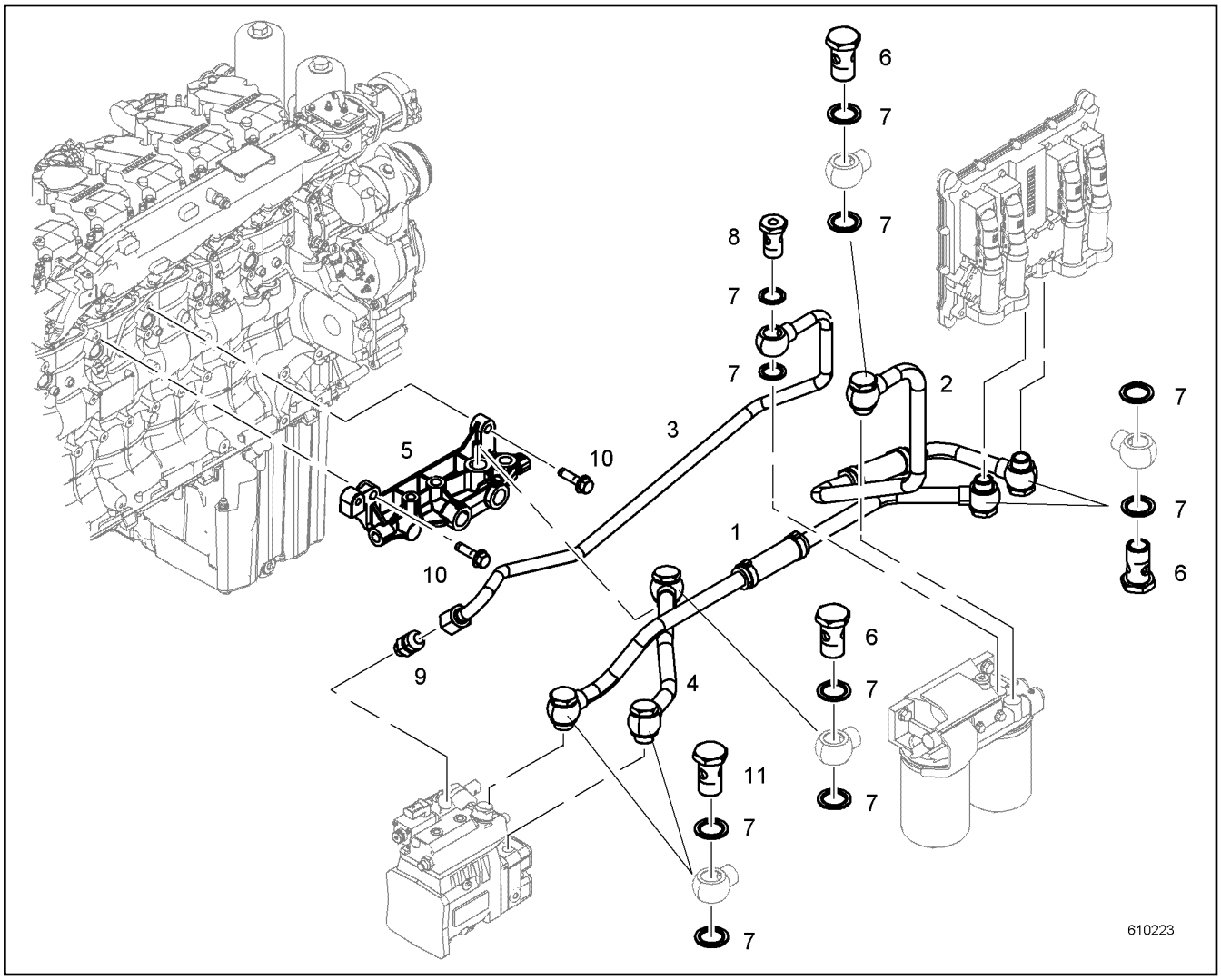

Pos.	Item	Quantity	Description	Bezeichnung	Serie	K
1	10141988	1	PIPELINE	ROHRLEITUNG		
2	10141989	1	PIPELINE	ROHRLEITUNG		
3	10142080	1	PIPELINE	ROHRLEITUNG		
4	10141986	1	PIPELINE	ROHRLEITUNG		
5	10151825	1	DISTRIBUTOR BLOCK	VERTEILERBLOCK		
6	4981226	4	HOLLOW SCREW DIN 7643 15	HOHLSCHRAUBE		
7	10011868	14	SEALING RING	DICHTRING		
8	10129819	1	HOLLOW SCREW DIN 7643 15X3	HOHLSCHRAUBE		
9	11002988	1	FITTING	VERSCHRAUBUNG		
10	10007782	2	HEX SCREW EN 1665 M8X30 8.8	SECHSKANTSCHRAUBE		
11	11443132	2	HOLLOW SCREW	HOHLSCHRAUBE		

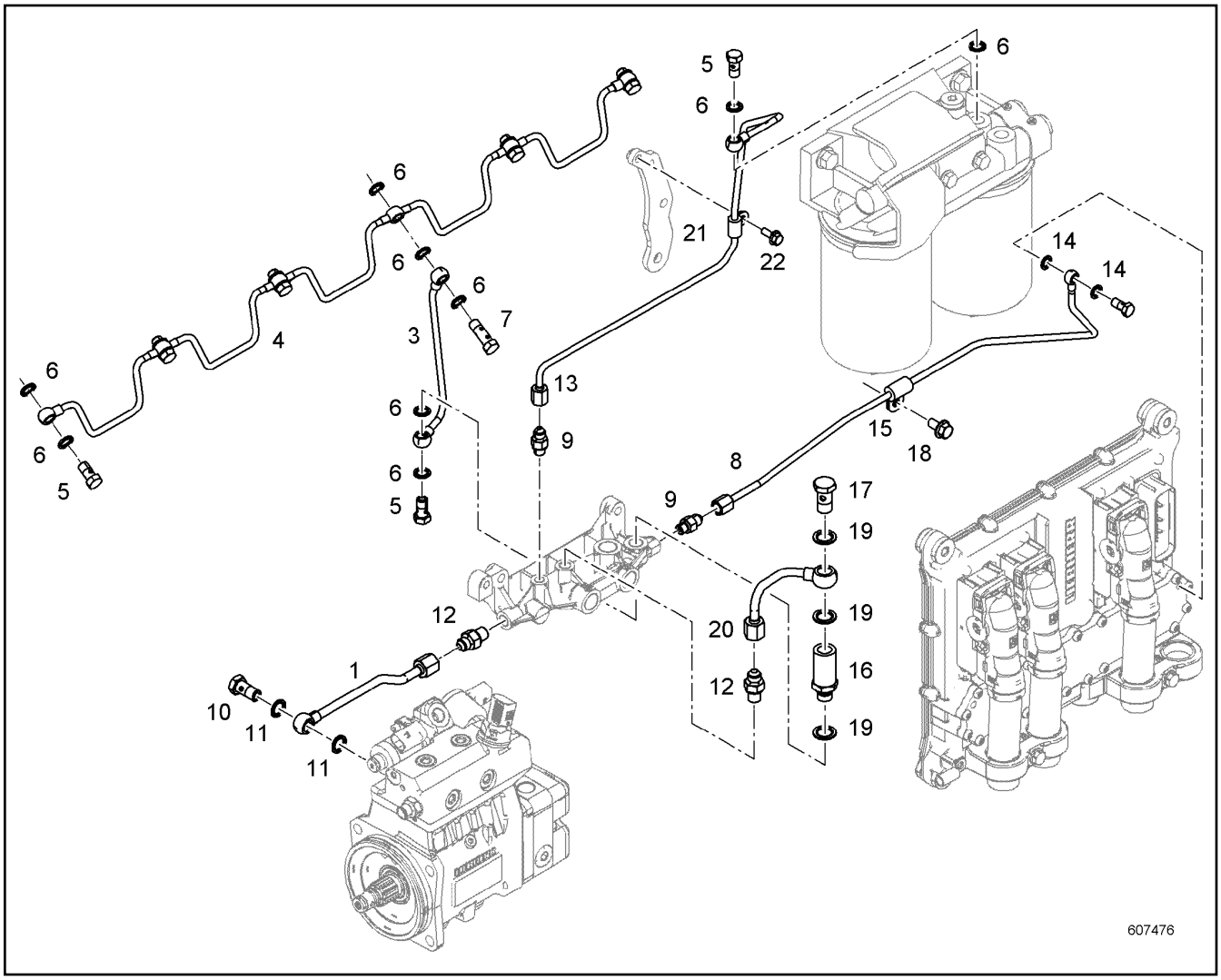

Pos.	Item	Quantity	Description	Bezeichnung	Serie	K
1	10143235	1	PIPELINE	ROHRLEITUNG		
3	10132170	1	PIPELINE	ROHRLEITUNG		
4	9076621	1	FUEL LINE	KRAFTSTOFFLEITUNG		
5	4079160	7	HOLLOW SCREW DIN 7643 M10X1	HOHLSCHRAUBE		
6	10011864	17	SEALING RING	DICHTRING		
7	10014864	1	DOUBLE BANJO BOLT 6X6 9SMNPB28K	DOPPELHOHLSCHRAUBE		
8	10142006	1	PIPELINE	ROHRLEITUNG		
9	10813933	2	FITTING	VERSCHRAUBUNG		
10	4980664	1	HOLLOW SCREW DIN 7643 8X3	HOHLSCHRAUBE		
11	10011865	2	SEALING RING	DICHTRING		
12	10813935	2	FITTING	VERSCHRAUBUNG		
13	10145889	1	PIPELINE	ROHRLEITUNG		
14	10011871	2	SEALING RING	DICHTRING		
15	7382088	1	CLAMP	SCHELLE		
16	10132935	1	INTERMEDIATE PART	ZWISCHENSTUECK		
17	4079240	1	HOLLOW SCREW DIN 7643 10X3	HOHLSCHRAUBE		
18	10005078	1	HEX SCREW EN 1665 M8X16 8.8	SECHSKANTSCHRAUBE		
19	10011866	3	SEALING RING	DICHTRING		
20	10132180	1	PIPELINE	ROHRLEITUNG		
21	7381292	1	CLAMP	SCHELLE		
22	407350208	1	HEX SCREW EN 1665 M6X16 8.8	SECHSKANTSCHRAUBE		

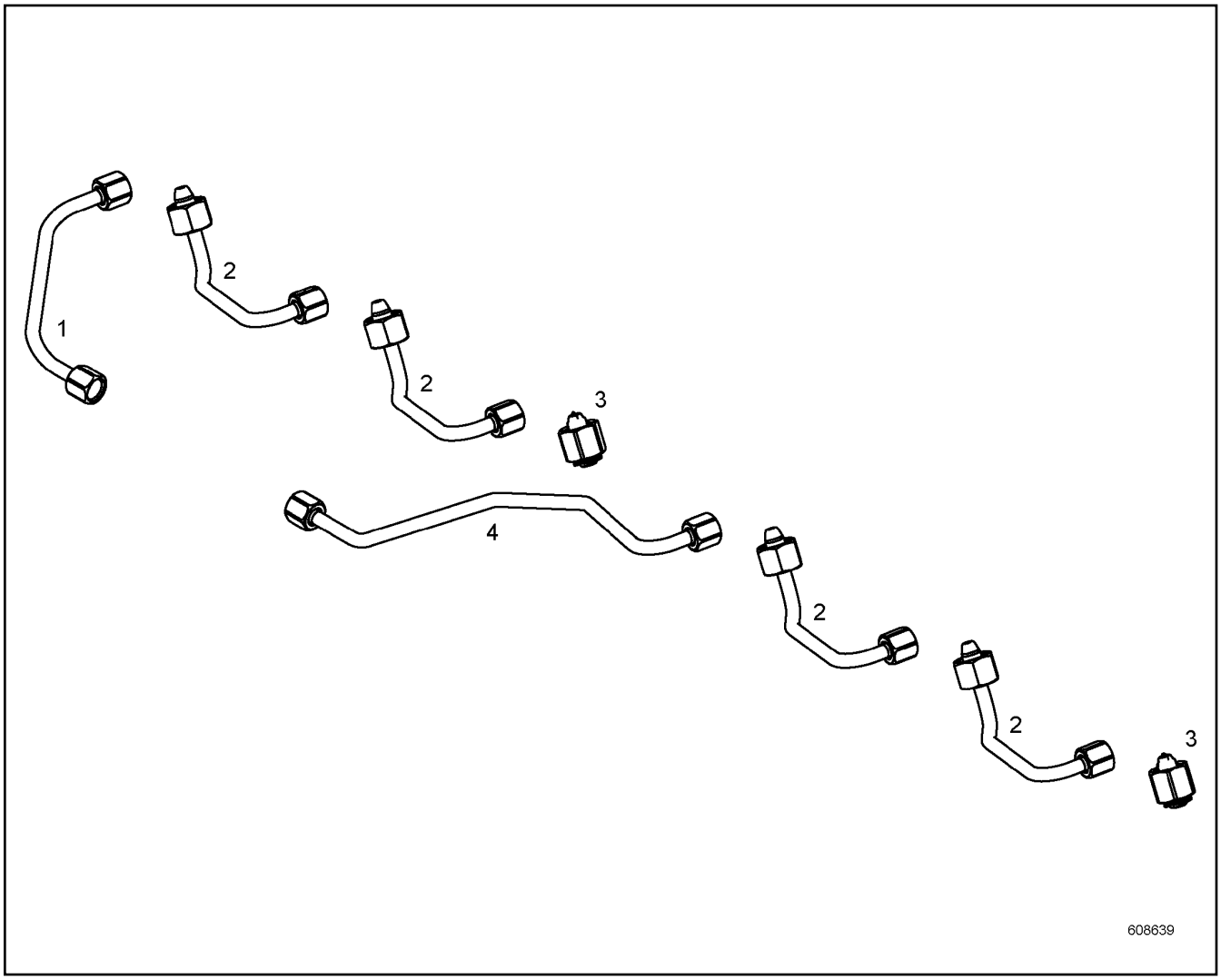

Pos.	Item	Quantity	Description	Bezeichnung	Serie	K
1	10143829	1	INJECTION LINE	EINSPRITZLEITUNG		
2	10143827	4	INJECTION LINE	EINSPRITZLEITUNG		
3	11389287	2	SEALING PLUG	DICHTSTOPFEN		
4	10143831	1	INJECTION LINE	EINSPRITZLEITUNG		

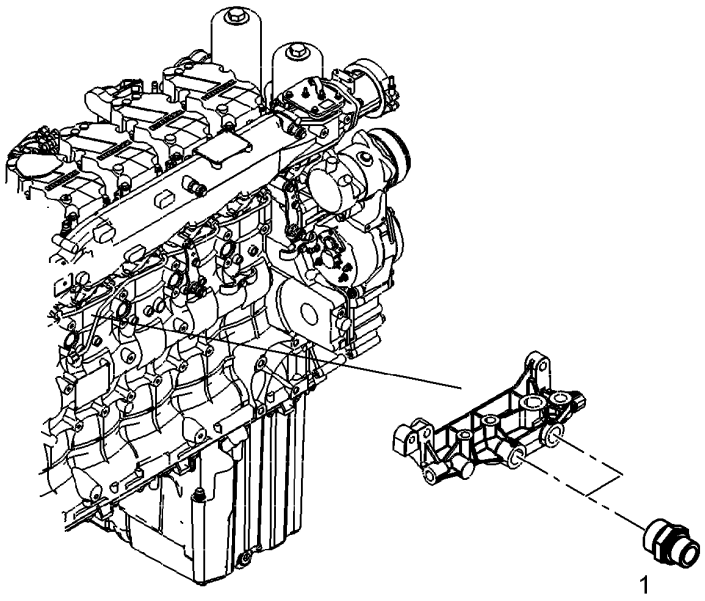

607413

Pos.	Item	Quantity	Description	Bezeichnung	Serie	K
1	4981232	2	FITTING	VERSCHRAUBUNG		

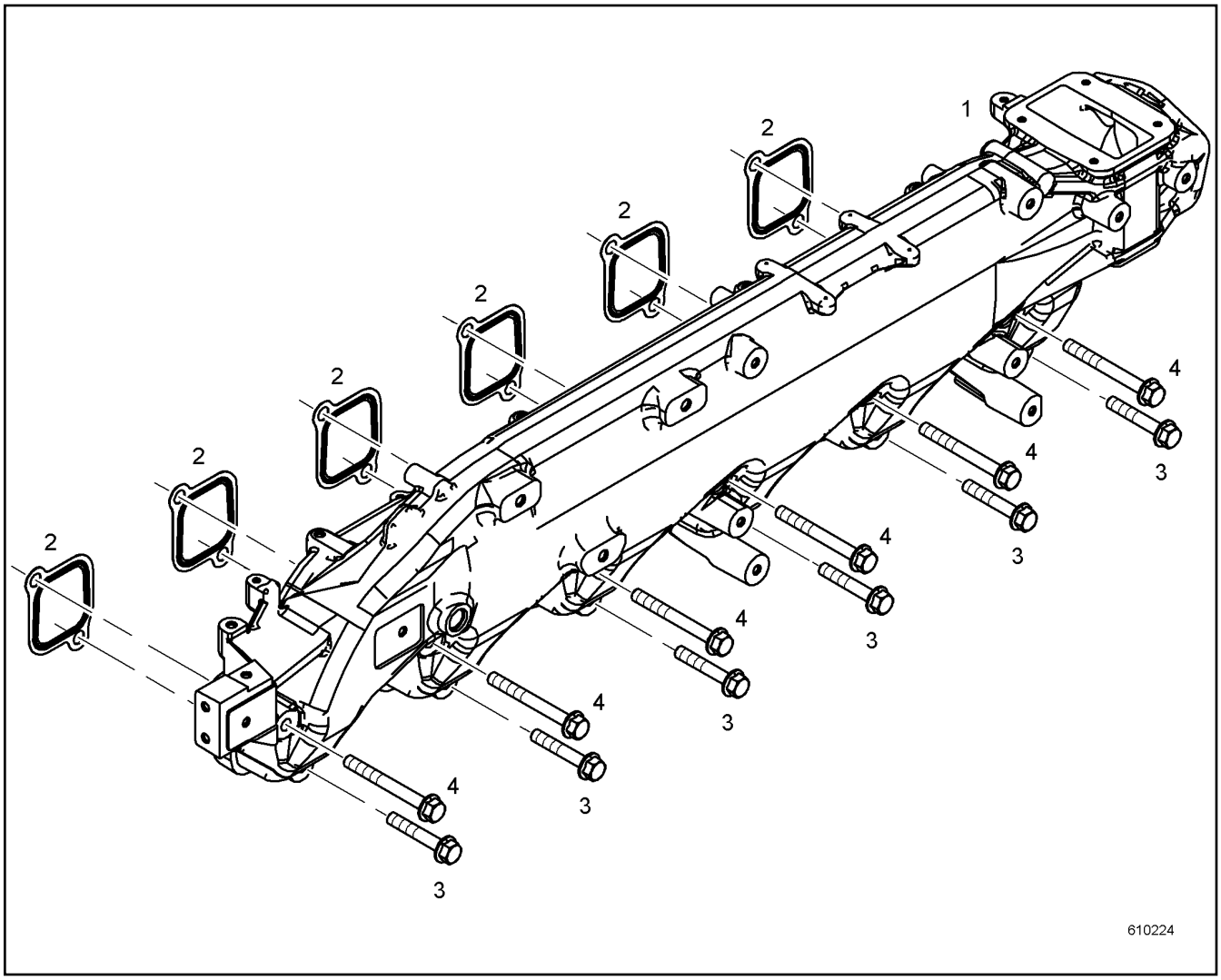

Pos.	Item	Quantity	Description	Bezeichnung	Serie	K
1	11415782	1	AIR SUCTION PIPE	LUFTANSAUGROHR		
2	10118556	6	SEAL	DICHTUNG		
3	10014638	6	HEX SCREW EN 1665 M10X60 8.8	SECHSKANTSCHRAUBE		
4	10489016	6	HEX SCREW DIN 6921 M10X90 8.8	SECHSKANTSCHRAUBE		

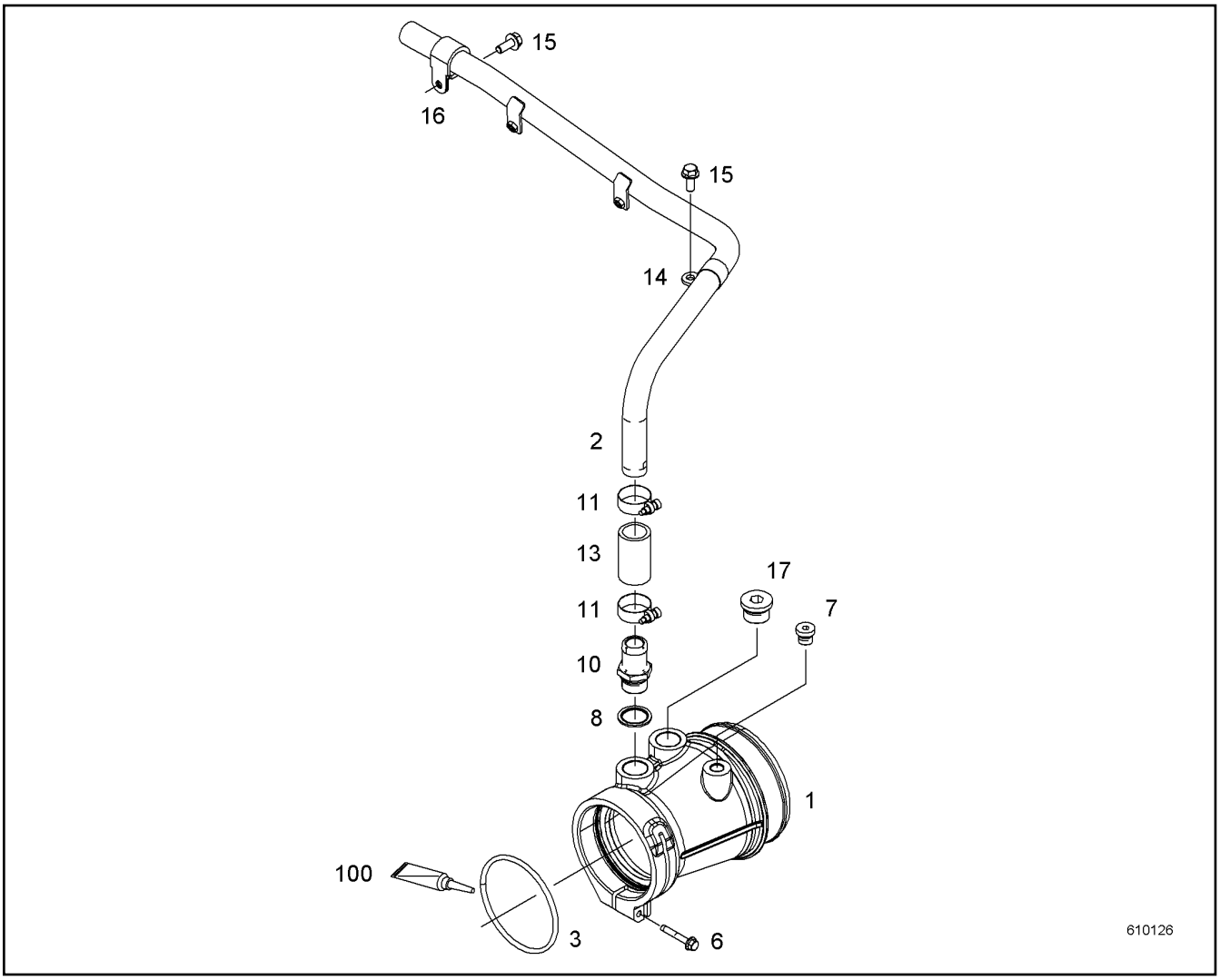

Pos.	Item	Quantity	Description	Bezeichnung	Serie	K
1	11444998	1	INTAKE STACK	ANSAUGSTUTZEN		
2	10147368	1	PIPELINE	ROHRLEITUNG		
3	11008055	1	O-RING	O-RING		
6	11656240	1	HEX SCREW DIN 6921 M6X40 8.8	SECHSKANTSCHRAUBE		
7	7380566	1	SCREW PLUG	VERSCHLUSSSCHRAUBE		
8	10011870	1	SEALING RING	DICHTRING		
10	10121893	1	HOSE NIPPLE	SCHLAUCHNIPPEL		
11	4900778	2	HOSE CLAMP	SCHLAUCHSCHELLE		
13	9271340	1	RUBBER CONNECTION	GUMMIMUFFE		
14	7381631	1	CLAMP	SCHELLE		
15	10016906	2	HEX SCREW EN 1665 M8X20 8.8	SECHSKANTSCHRAUBE		
16	7381631	1	CLAMP	SCHELLE		
17	7381457	1	SCREW PLUG	VERSCHLUSSSCHRAUBE		
100	10285708	1	GREASE	FETT		

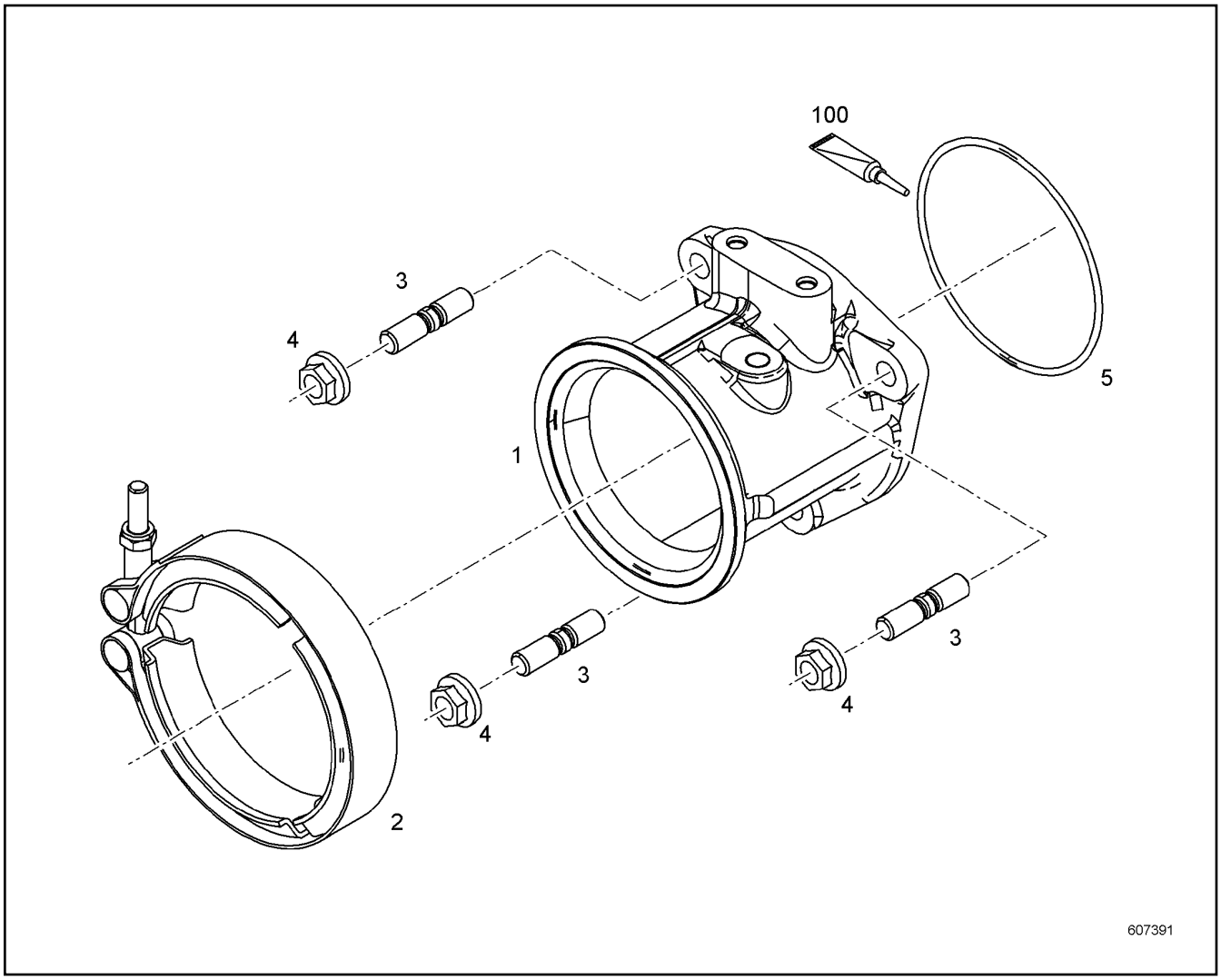

Pos.	Item	Quantity	Description	Bezeichnung	Serie	K
1	10141549	1	CONNECTING LINE	VERBINDUNGSLEITUNG		
2	10127984	1	RETAINER CLIP	SPANNSCHELLE		
3	10489376	3	DOUBLE-ENDED STUD DIN 835 M10X25 8.8	STIFTSCHRAUBE		
4	4980805	3	HEX NUT EN 1661 M10 8	SECHSKANTMUTTER		
5	7380605	1	O-RING	O-RING		
100	10285708	1	GREASE	FETT		

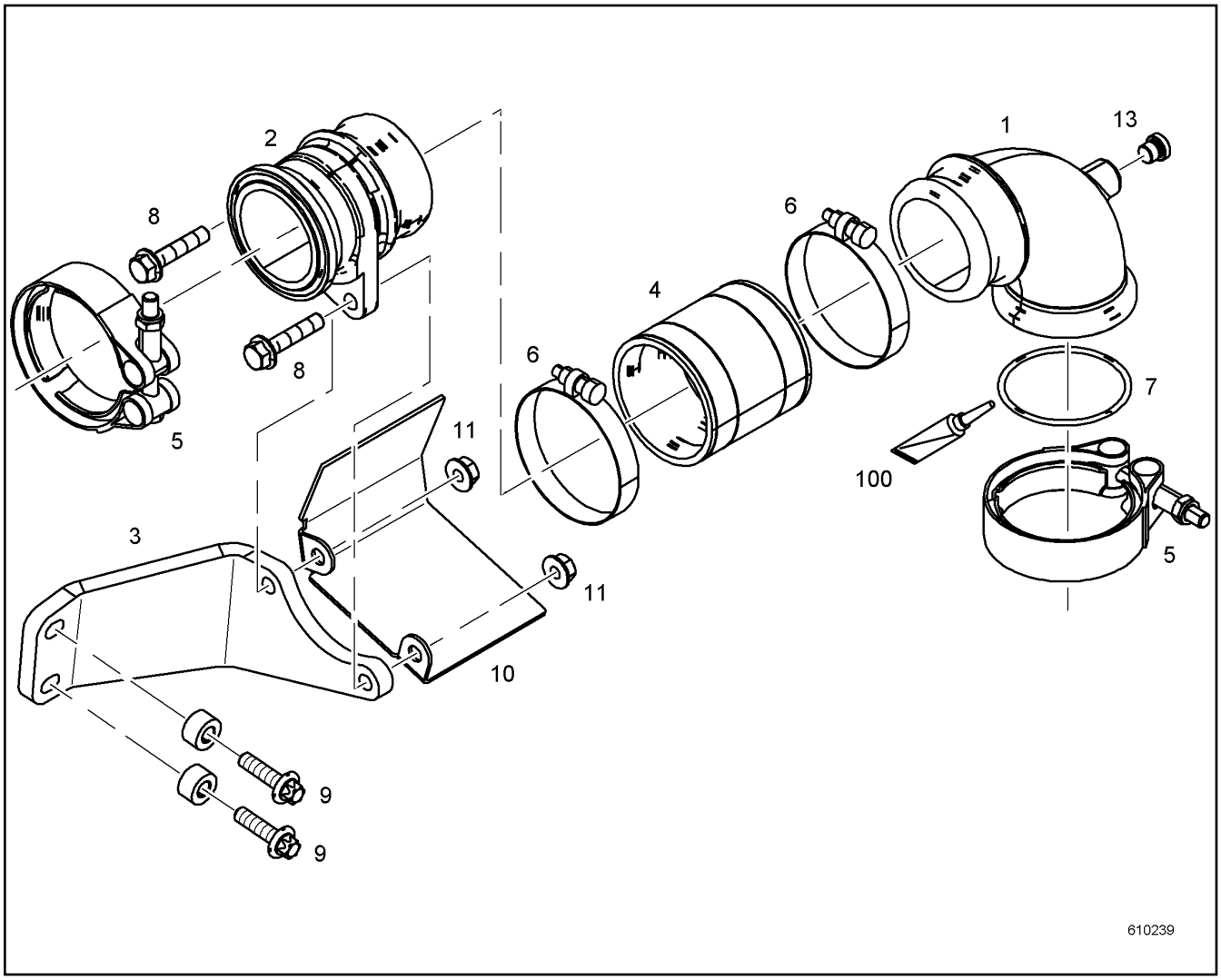

Pos.	Item	Quantity	Description	Bezeichnung	Serie	K
1	10143612	1	CHARGE AIR LINE	LADELUFTLEITUNG		
2	10143614	1	CHARGE AIR LINE	LADELUFTLEITUNG		
3	11404751	1	CONSOLE	KONSOLE		
4	10129904	1	RUBBER CONNECTION	GUMMIMUFFE		
5	10124798	2	RETAINER CLIP	SPANNSCHELLE		
6	5004929	2	HOSE CLAMP	SCHLAUCHSCHELLE		
7	7380970	1	O-RING	O-RING		
8	10440788	2	HEX SCREW EN 1665 M8X40 8.8	SECHSKANTSCHRAUBE		
9	10125702	2	HEXALOBULAR HEAD SCREW M8X30 21CRM	SECHSRUNDSCHRAUBE		
10	12428325	1	HEAT PROTECTION SHEET	HITZESCHUTZBLECH		
11	10424333	2	HEX NUT EN 1661 M8 8	SECHSKANTMUTTER		
13	7381638	1	SCREW PLUG	VERSCHLUSSSCHRAUBE		
100	10285708	1	GREASE	FETT		

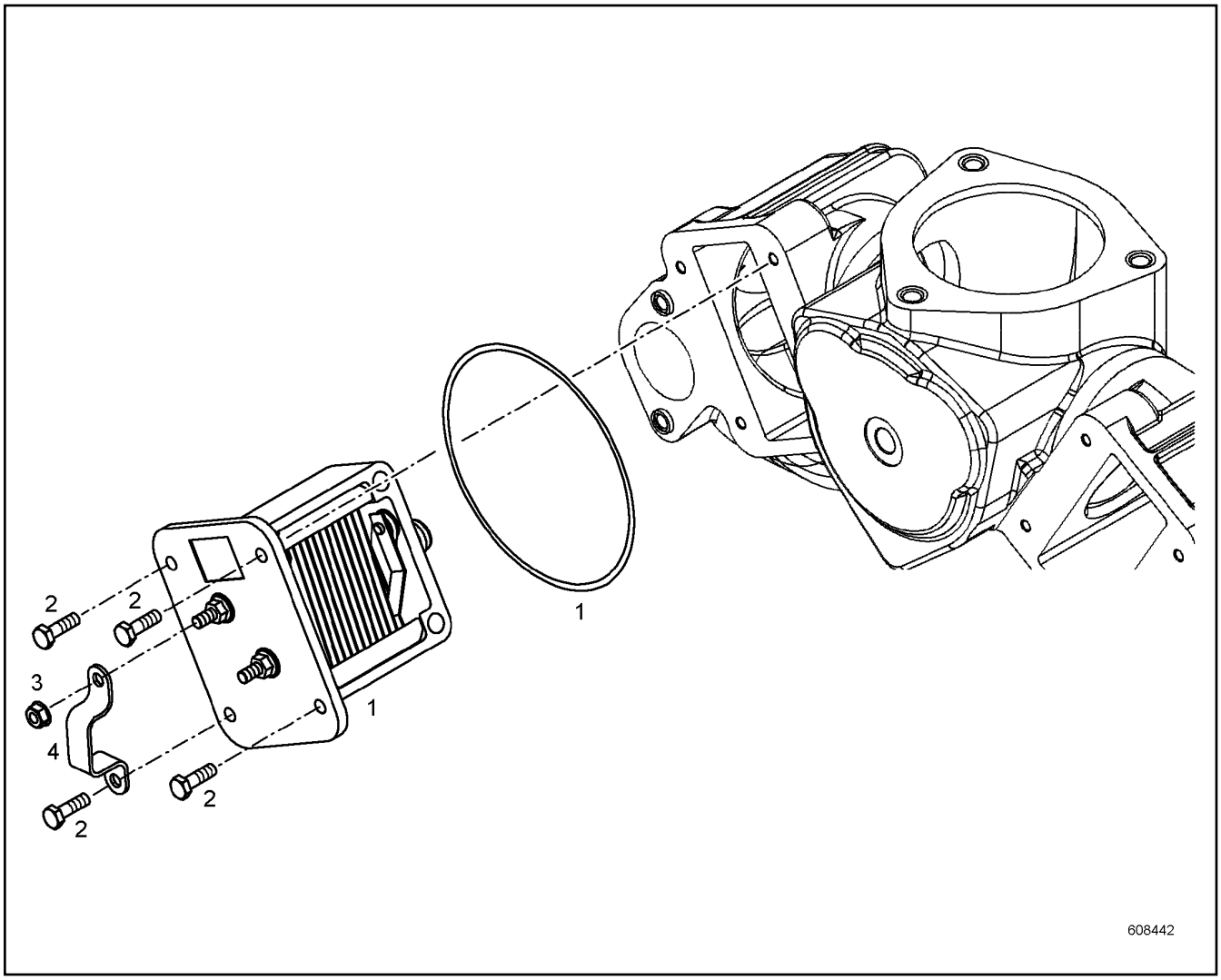

Pos.	Item	Quantity	Description	Bezeichnung	Serie	K
1	10299988	1	HEATING FLANGE PRE.ASS. ⇨ ❑ 278	HEIZFLANSCH VORM.		
2	10018711	4	HEX SCREW DIN 6921 M6X20 8.8	SECHSKANTSCHRAUBE		
3	10003366	1	RIBBED HEX NUT M6 10	SECHSKANTRIPPENMUTTER		
4	9080911	1	EARTH CONNECTION PLATE	MASSEVERBINDUNGSBLECH		

OHNE BILD
WITHOUT ILLUSTRATION
SANS PLANCHE
SIN FIG.
SEM ILUSTRAÇÃO
БЕЗ ИЗОБРАЖЕНИЯ

600000

Pos.	Item	Quantity	Description	Bezeichnung	Serie	K
1	10116255	1	O-RING	O-RING		
2	7380935	1	O-RING	O-RING		

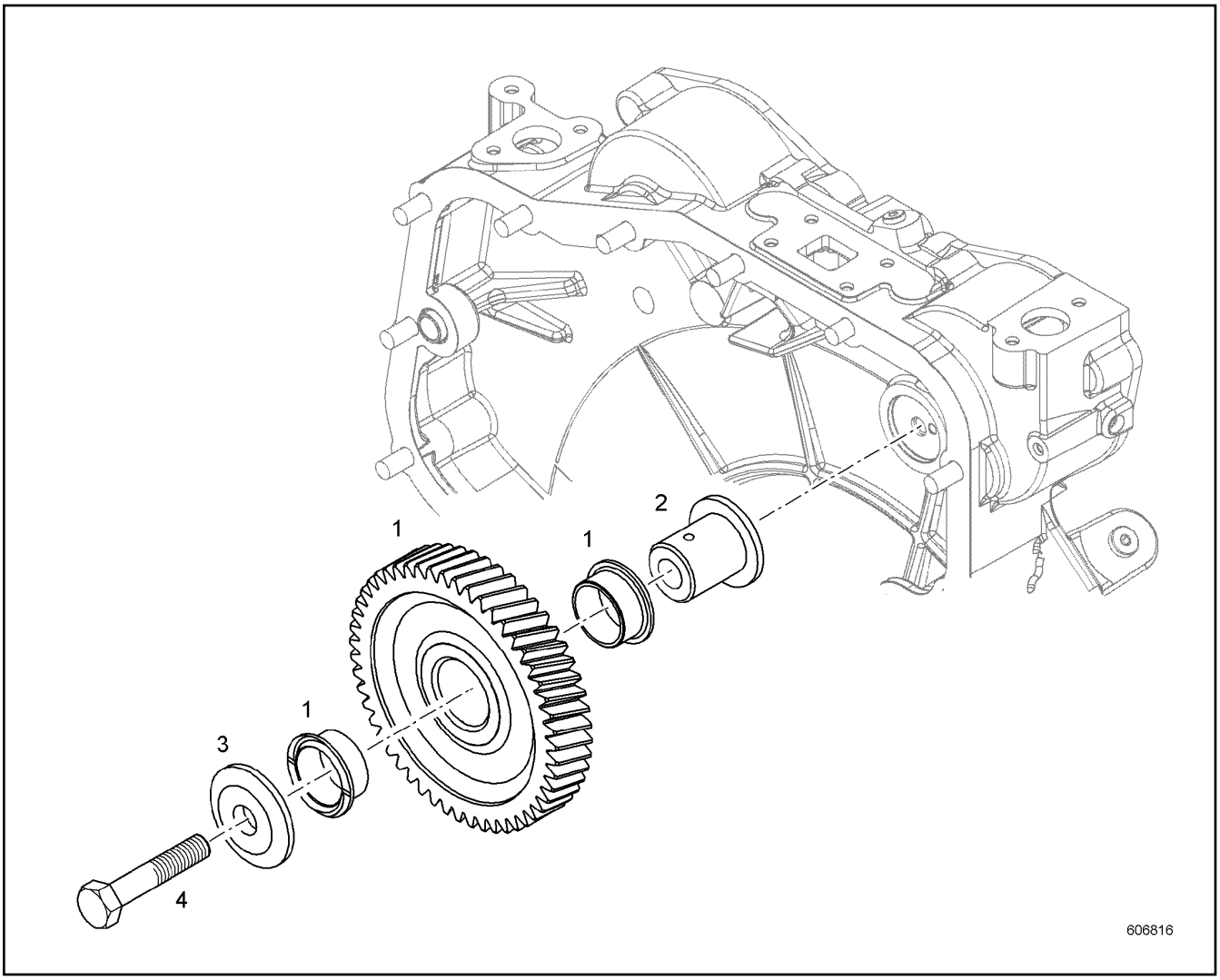

Pos.	Item	Quantity	Description	Bezeichnung	Serie	K
1	9072904	1	INTERMEDIATE GEAR PRE-ASSY.	ZWISCHENRAD VORM.		
2	9072907	1	INTERMEDIATE WHEEL AXLE	ZWISCHENRADACHSE		
3	9072908	1	BEARING COVER	LAGERDECKEL		
4	10013916	1	HEX SCREW ISO 4014 M12X65 8.8	SECHSKANTSCHRAUBE		

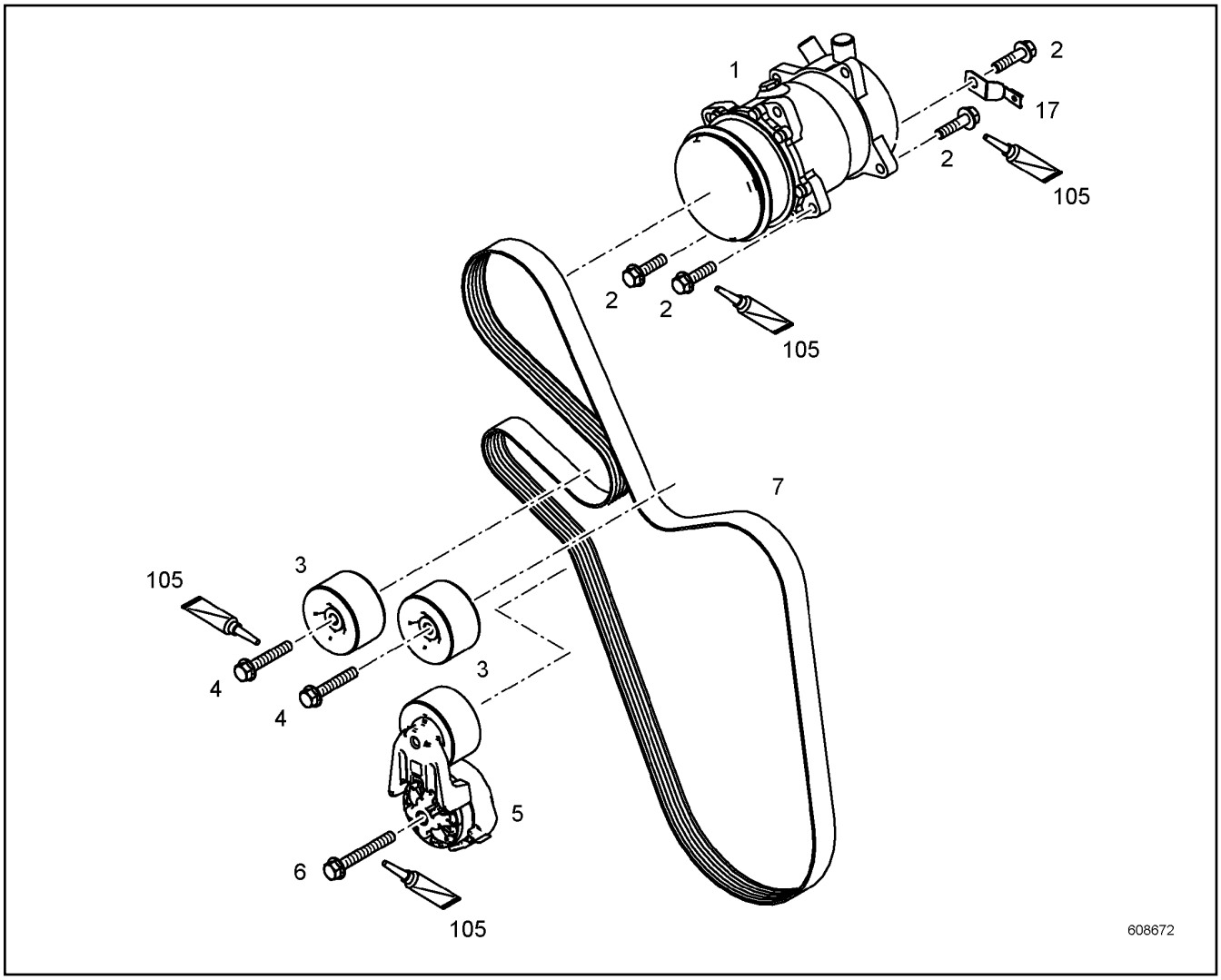

Pos.	Item	Quantity	Description	Bezeichnung	Serie	K
1	10116767	1	AIR CONDITIONING COMPRESSOR	KLIMAKOMPRESSOR		
2	10112497	4	HEX SCREW DIN 6921 M10X40 8.8	SECHSKANTSCHRAUBE		
3	10149360	2	GUIDE PULLEY COMPL.	UMLENKROLLE VORM.		
4	10014638	2	HEX SCREW EN 1665 M10X60 8.8	SECHSKANTSCHRAUBE		
5	10153373	1	FASTENING DEVICE	SPANNVORRICHTUNG		
6	10101657	1	HEX SCREW EN 1665 M10X80 8.8	SECHSKANTSCHRAUBE		
7	11482412	1	V-RIPPED BELT	KEILRIPPENRIEMEN		
17	10041876	1	HOLDER	HALTER		
105	811202114	1	SCREW LOCKING	SCHRAUBENSICHERUNG		

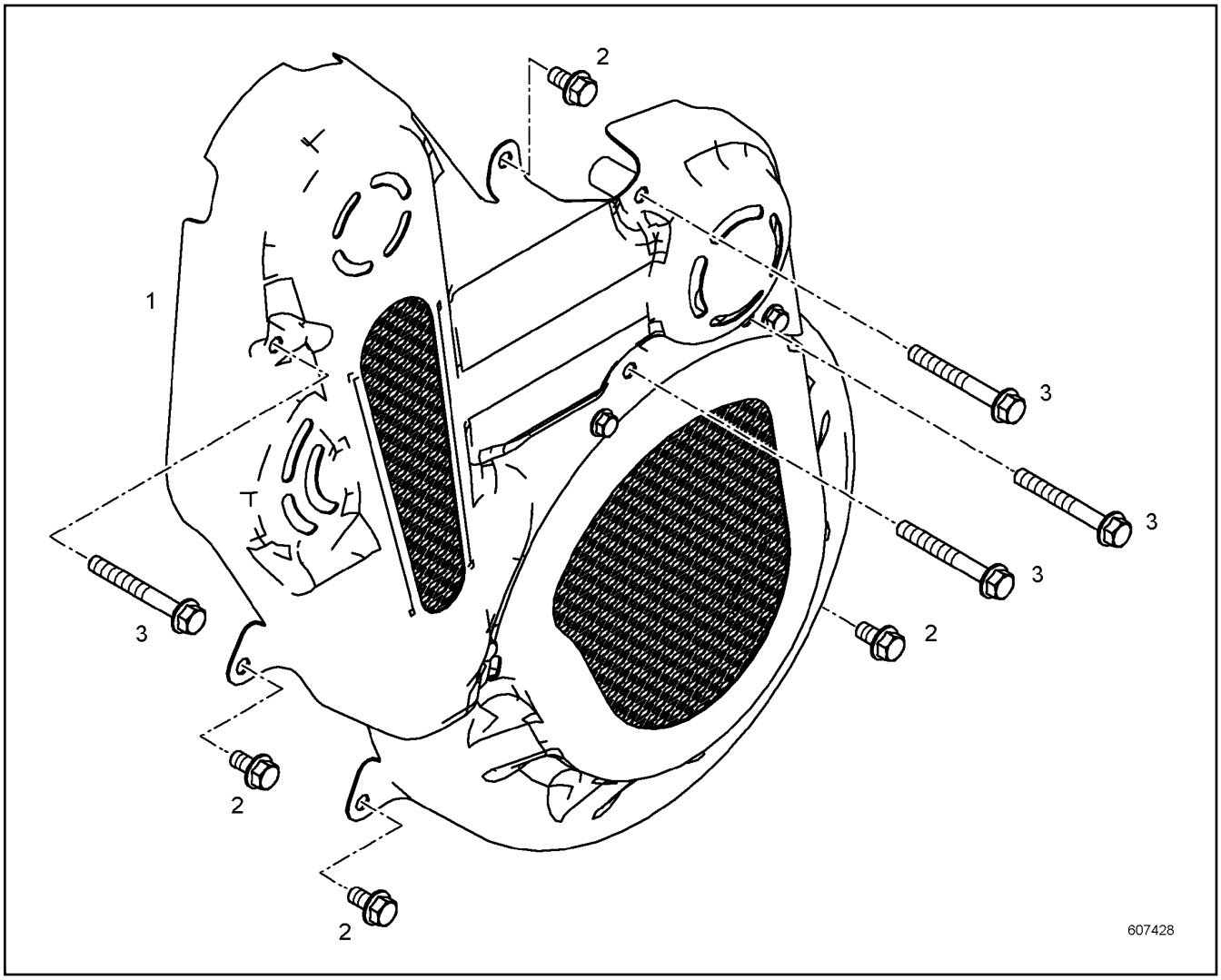

Pos.	Item	Quantity	Description	Bezeichnung	Serie	K
1	11440134	1	COVER PRE-ASS. ⇨ ❑ 282	ABDECKUNG VORM.		
2	10030518	4	HEX SCREW EN 1665 M10X20 8.8	SECHSKANTSCHRAUBE		
3	10101657	4	HEX SCREW EN 1665 M10X80 8.8	SECHSKANTSCHRAUBE		

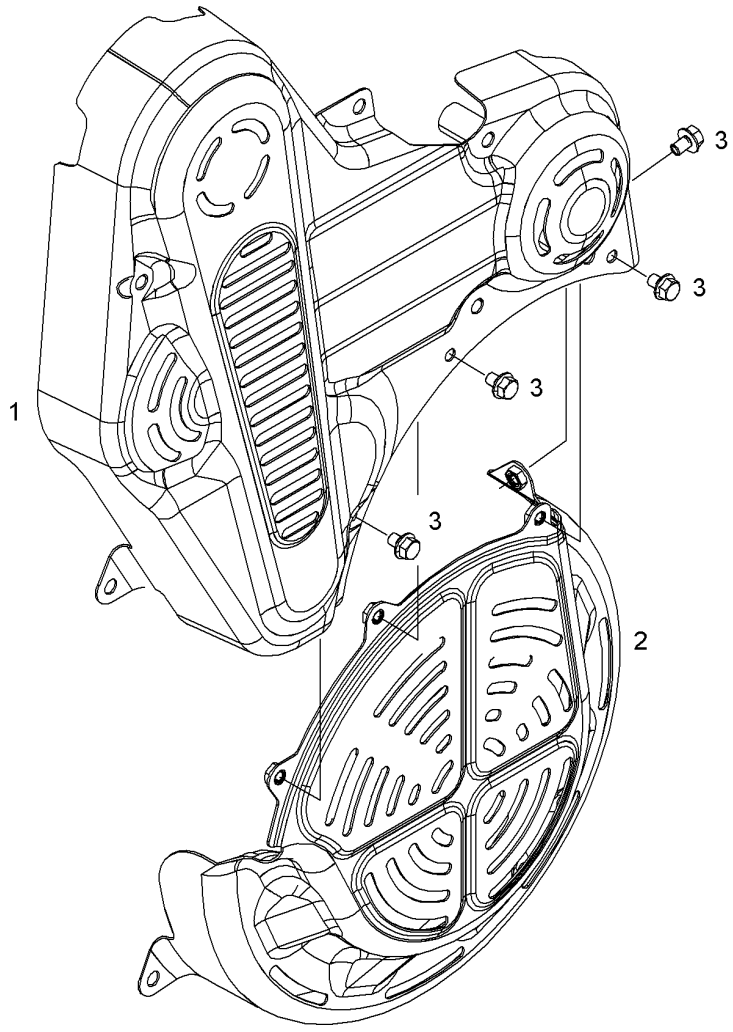

Pos.	Item	Quantity	Description	Bezeichnung	Serie	K
1	11357451	1	COVER	ABDECKUNG		
2	11357453	1	COVER	ABDECKUNG		
3	10024115	4	HEX SCREW EN 1665 M8X12 8.8	SECHSKANTSCHRAUBE		

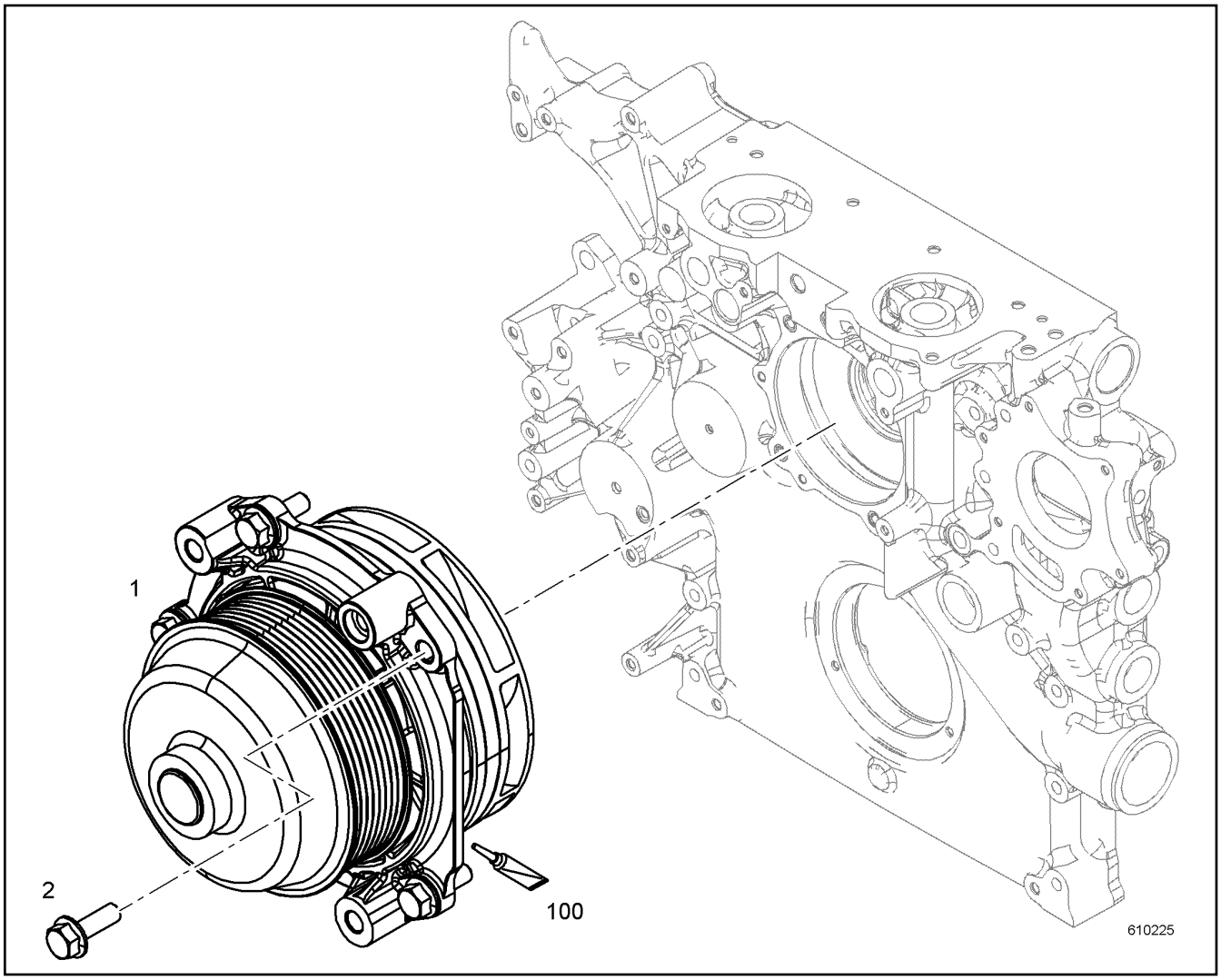

Pos.	Item	Quantity	Description	Bezeichnung	Serie	K
1	11354498	1	WATER PUMP, PRE-ASSEMBLED	WASSERPUMPE VORM.		
2	10009007	5	HEX SCREW EN 1665 M8X25 8.8	SECHSKANTSCHRAUBE		
100	10285708	1	GREASE	FETT		

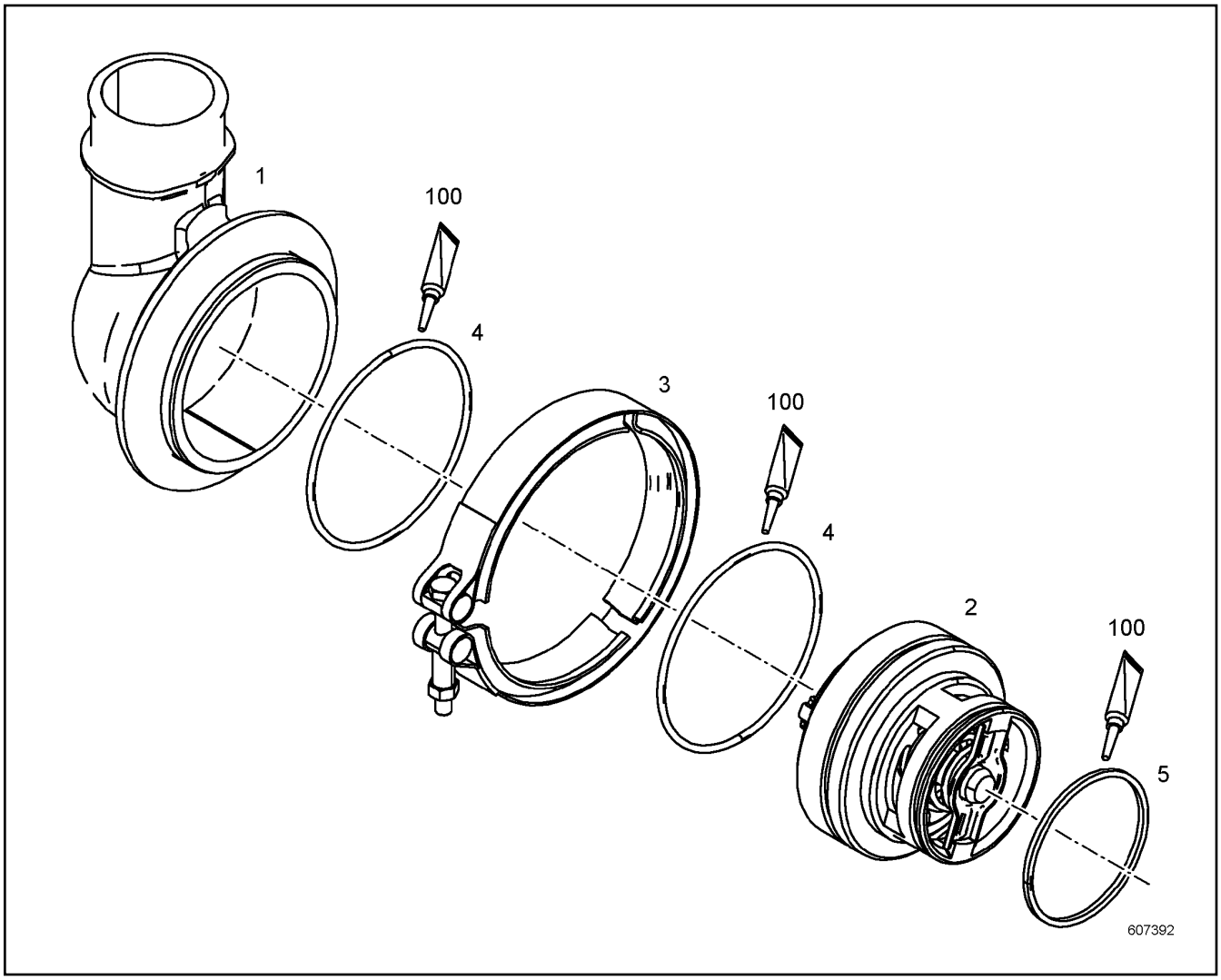

Pos.	Item	Quantity	Description	Bezeichnung	Serie	K
1	10148200	1	THERMOSTAT HOUSING	THERMOSTATGEHAEUSE		
2	10154798	1	THERMOSTAT	THERMOSTAT		
3	10138820	1	RETAINER CLIP	SPANNSCHELLE		
4	10002167	2	O-RING	O-RING		
5	7009080	1	O-RING	O-RING		
100	10285708	1	GREASE	FETT		

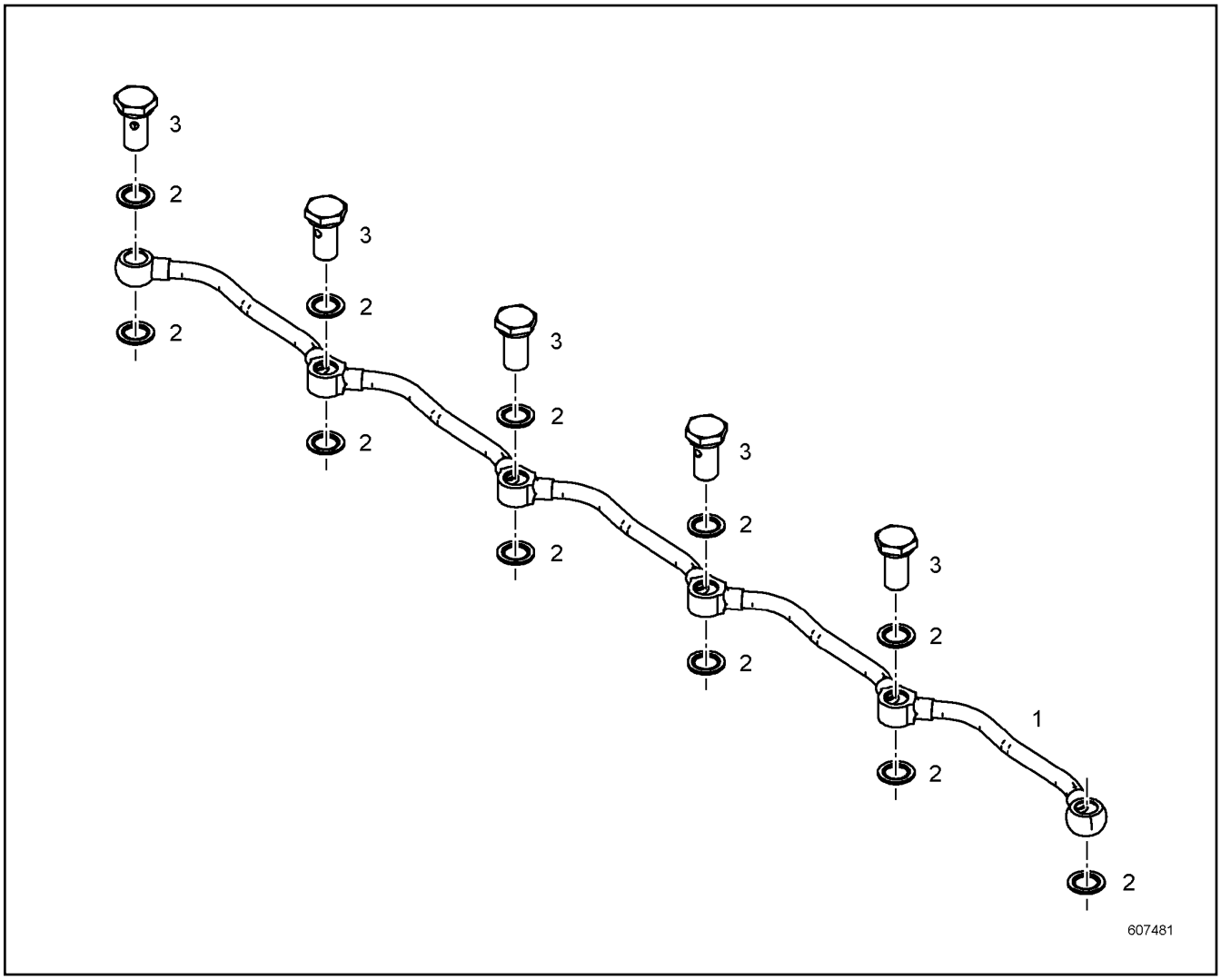

Pos.	Item	Quantity	Description	Bezeichnung	Serie	K
1	10149699	1	PIPELINE	ROHRLEITUNG		
2	10011866	11	SEALING RING	DICHTRING		
3	9080466	5	HOLLOW SCREW 10X1 9SMNPB28K	HOHLSCHRAUBE		

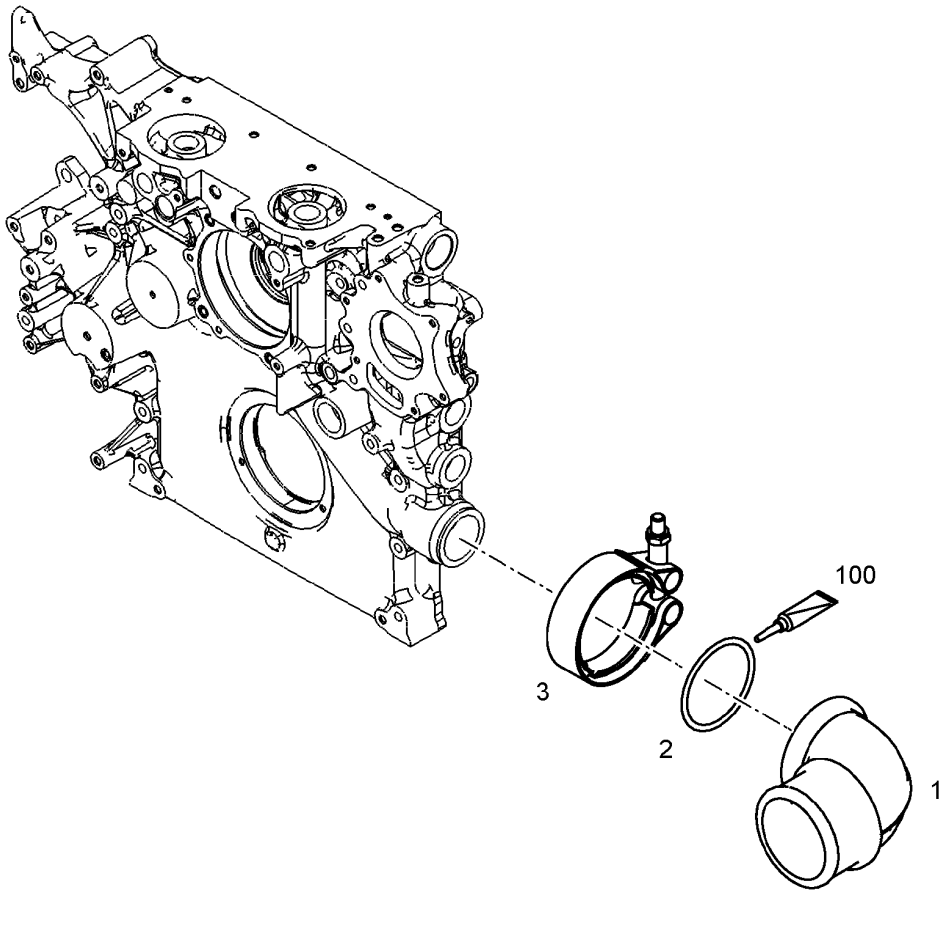

Pos.	Item	Quantity	Description	Bezeichnung	Serie	K
1	10153669	1	ELBOW	KRUEMMER		
2	10122841	1	RETAINER CLIP	SPANNSCHELLE		
3	7380083	1	O-RING	O-RING		
100	10285708	1	GREASE	FETT		

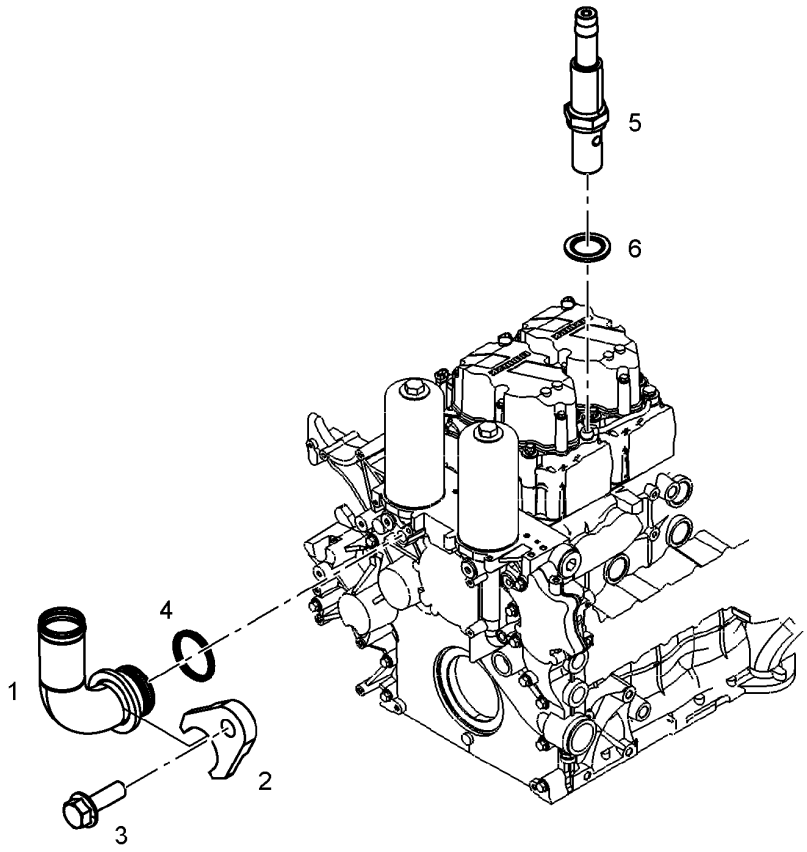

Pos.	Item	Quantity	Description	Bezeichnung	Serie	K
1	10142668	1	HOSE NIPPLE	SCHLAUCHNIPPEL		
2	10142763	1	PLATE	BLECH		
3	10009007	1	HEX SCREW EN 1665 M8X25 8.8	SECHSKANTSCHRAUBE		
4	7381526	1	O-RING	O-RING		
5	10140969	1	HOSE NIPPLE	SCHLAUCHNIPPEL		
6	10011866	1	SEALING RING	DICHTRING		

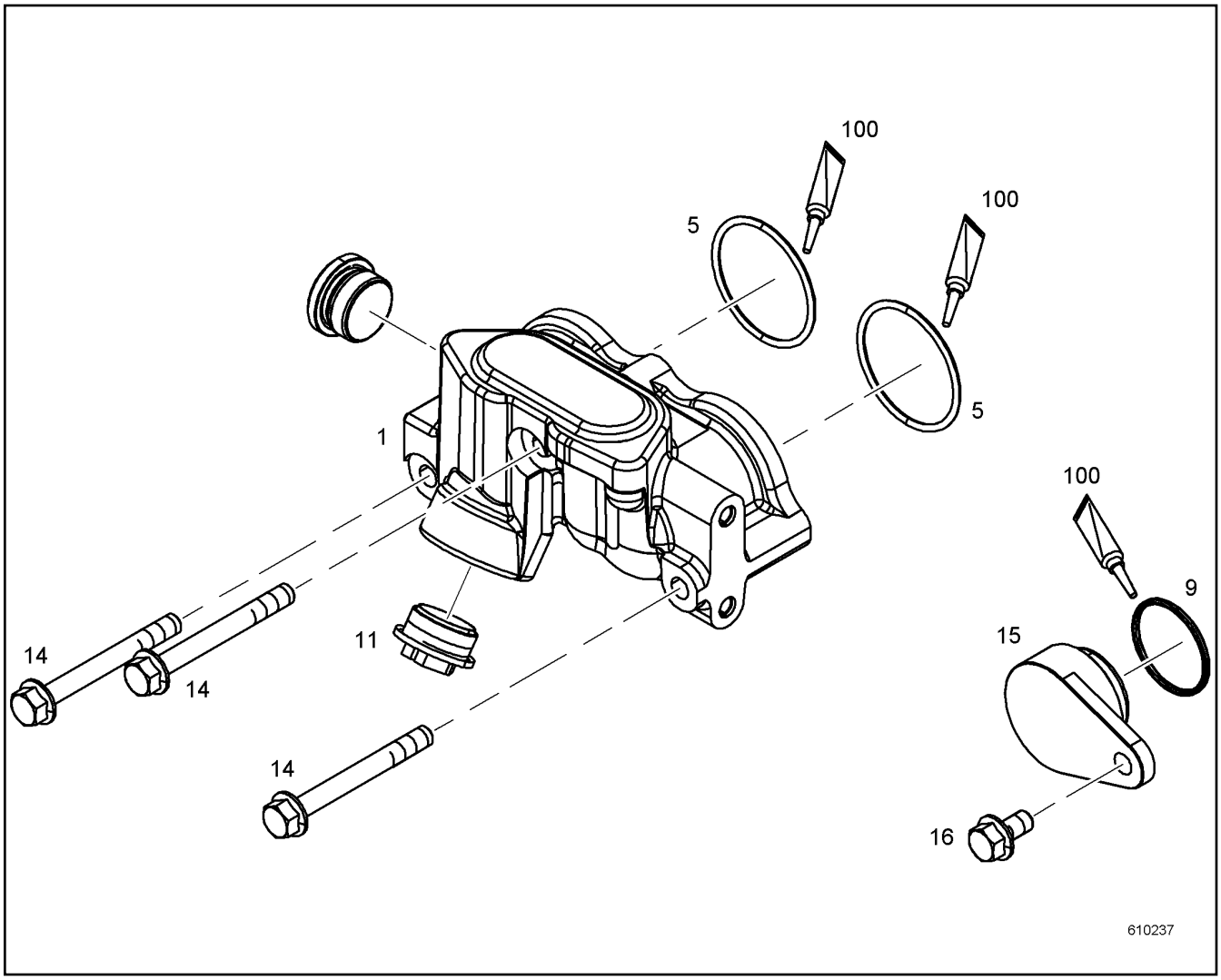

Pos.	Item	Quantity	Description	Bezeichnung	Serie	K
1	10146018	1	WATER COLLECTING PIPE	WASSERSAMMELLEITUNG		
5	7381779	2	O-RING	O-RING		
9	7381615	1	O-RING	O-RING		
11	10465711	1	SEALING PLUG	DICHTSTOPFEN		
14	10489016	3	HEX SCREW DIN 6921 M10X90 8.8	SECHSKANTSCHRAUBE		
15	10143304	1	LOCKING PIECES	VERSCHLUSSTEILE		
16	10030518	1	HEX SCREW EN 1665 M10X20 8.8	SECHSKANTSCHRAUBE		
100	10285708	1	GREASE	FETT		

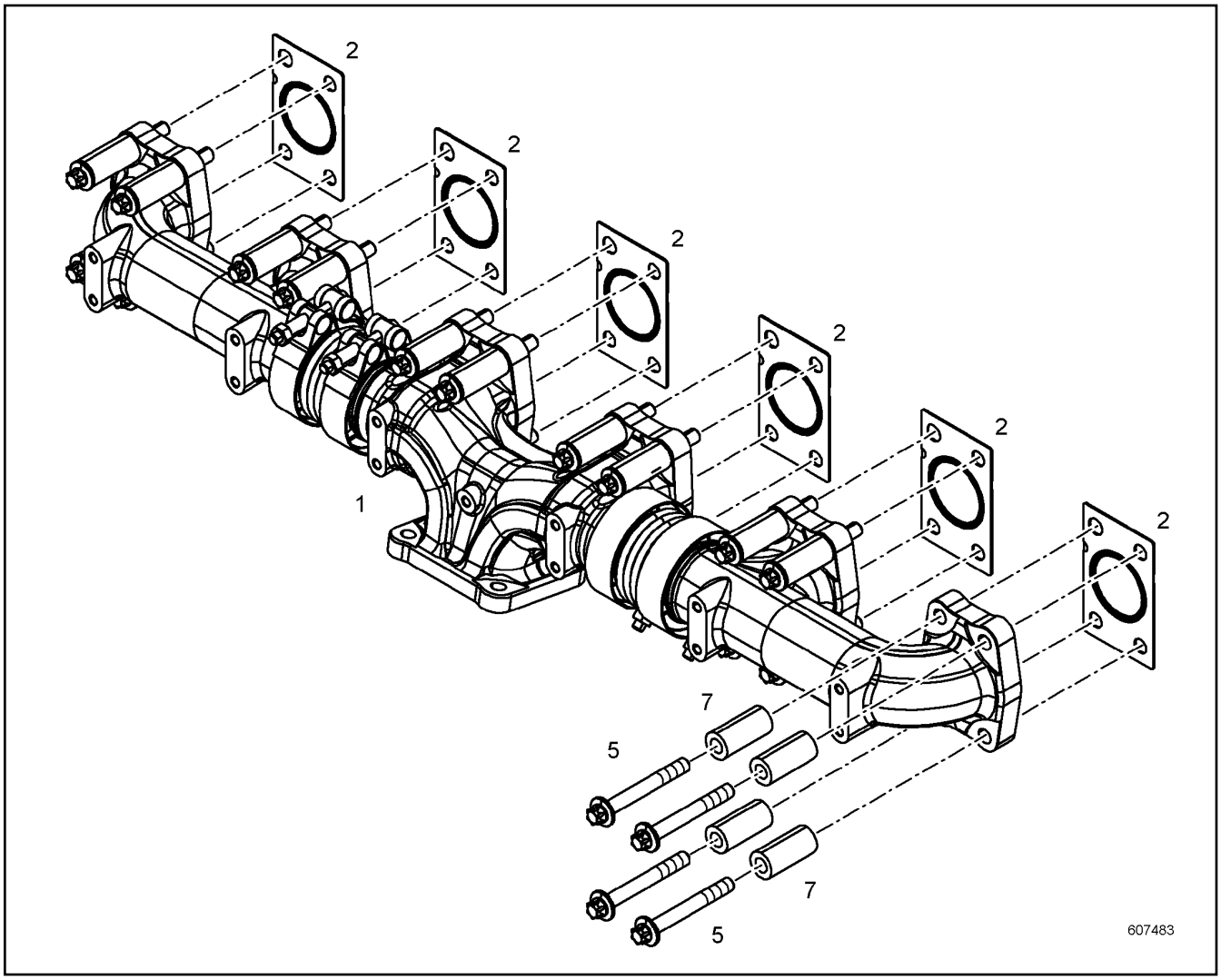

Pos.	Item	Quantity	Description	Bezeichnung	Serie	K
1	10141443	1	EXHAUST PIPE PRE-ASS. ⇨ ❑ 290	ABGASROHR VORM.		
2	10135885	6	SEAL	DICHTUNG		
5	10138772	24	HEXALOBULAR HEAD SCREW M10X80 21CRM	SECHSRUNDSCHRAUBE		
7	10141438	24	DISTANCE SLEEVE 11X21X45 42CRM04	DISTANZHUELSE		

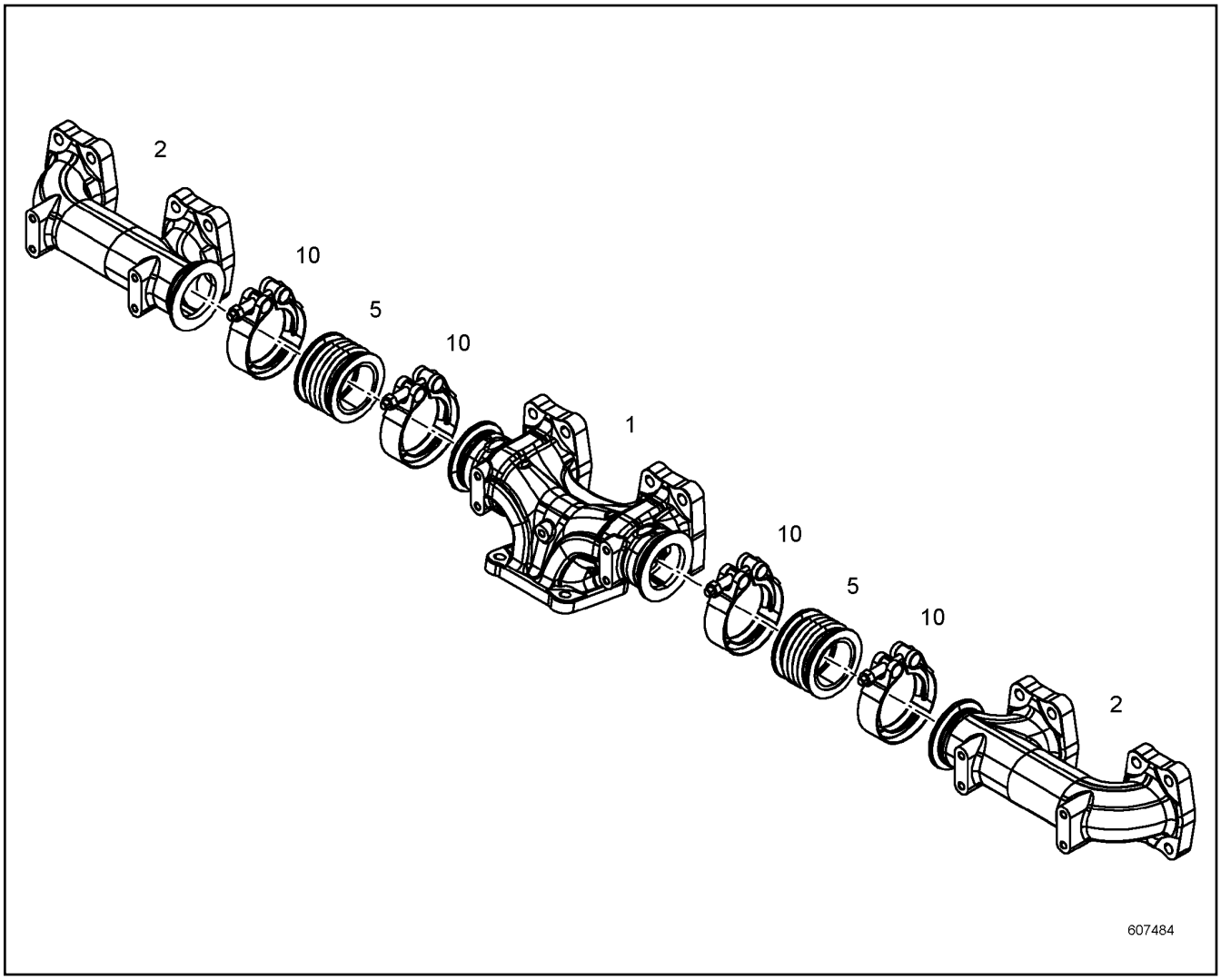

Pos.	Item	Quantity	Description	Bezeichnung	Serie	K
1	10141440	1	OUTLET MANIFOLD	ABGASKRUEMMER		
2	10141442	2	OUTLET MANIFOLD	ABGASKRUEMMER		
5	10141520	2	COMPENSATOR	KOMPENSATOR		
10	10132073	4	RETAINER CLIP	SPANNSCHELLE		

OHNE BILD
WITHOUT ILLUSTRATION
SANS PLANCHE
SIN FIG.
SEM ILUSTRAÇÃO
БЕЗ ИЗОБРАЖЕНИЯ

600000

Pos.	Item	Quantity	Description	Bezeichnung	Serie	K
1	10147371	1	HEAT PROTECTION SHEET	HITZESCHUTZBLECH		
2	9132577	4	DISTANCE SLEEVE 18X8.5X10	DISTANZHUELSE		
3	10118695	4	HEXALOBULAR HEAD SCREW M8X25 X5NICR	SECHSRUNDSCHRAUBE		

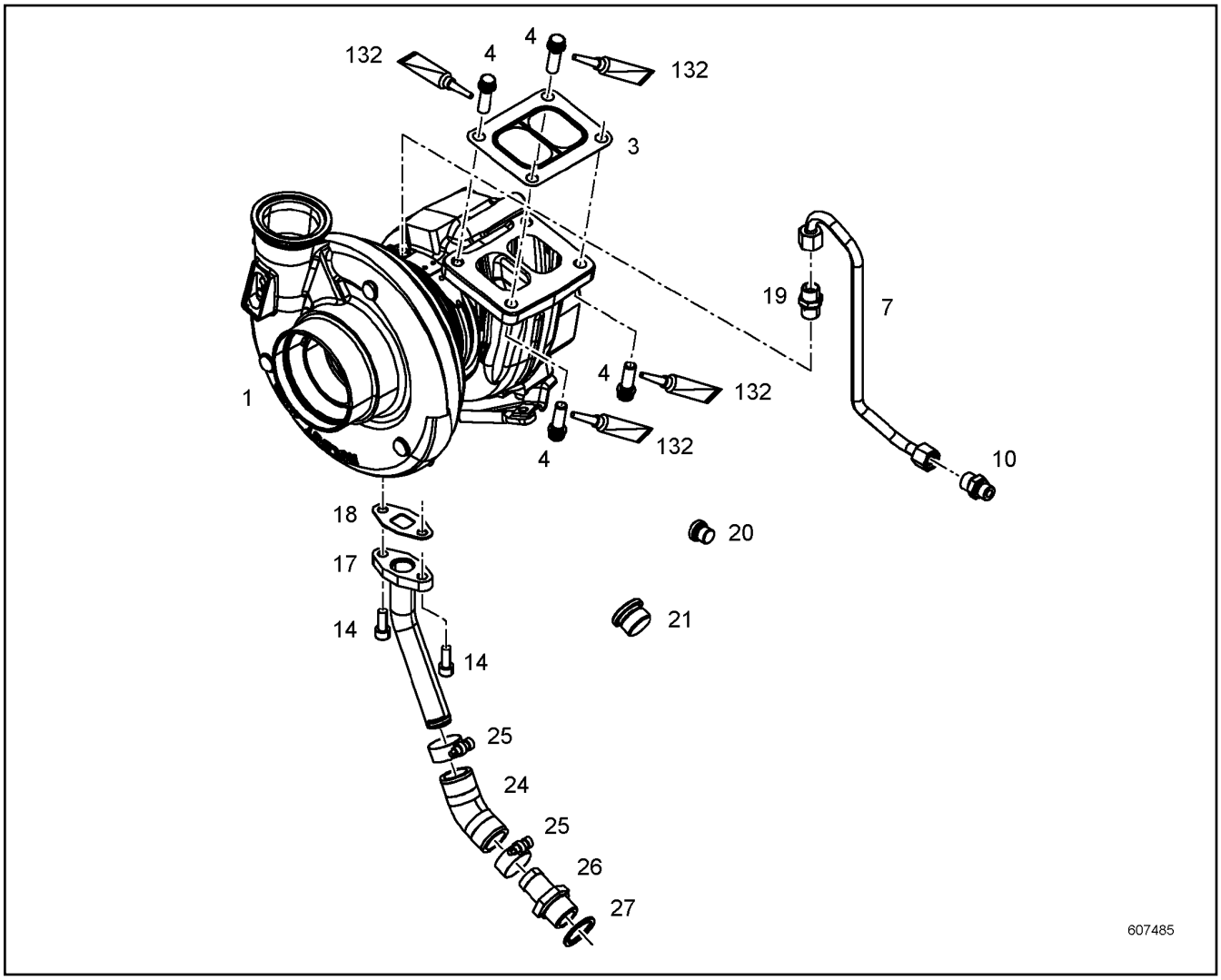

Pos.	Item	Quantity	Description	Bezeichnung	Serie	K
1	10139624	1	TURBOCHARGER	TURBOLADER		
3	10125740	1	SEAL	DICHTUNG		
4	10132558	4	12-SIDED SCREW M10X30 X5NICRTI26-15	ZWOELFKANTSCHRAUBE		
7	10140137	1	LUBRICATING OIL LINE	SCHMIEROELLEITUNG		
10	4981235	1	FITTING	VERSCHRAUBUNG		
14	4043082	2	SOCKET HEAD SCREW ISO 4762 M8X20 10.9	ZYLINDERSCHRAUBE		
17	10140138	1	OIL RETURN PIPE	OELRUECKLAUFLEITUNG		
18	10115623	1	SEAL	DICHTUNG		
19	7021521	1	FITTING	VERSCHRAUBUNG		
20	7380566	1	SCREW PLUG	VERSCHLUSSSCHRAUBE		
21	7381457	1	SCREW PLUG	VERSCHLUSSSCHRAUBE		
24	10128875	1	RUBBER CONNECTION	GUMMIMUFFE		
25	4900778	2	HOSE CLAMP	SCHLAUCHSCHELLE		
26	9140351	1	HOSE NIPPLE	SCHLAUCHNIPPEL		
27	10011870	1	SEALING RING	DICHTRING		
132	10002552	1	COPPER PASTE	KUPFERPASTE		

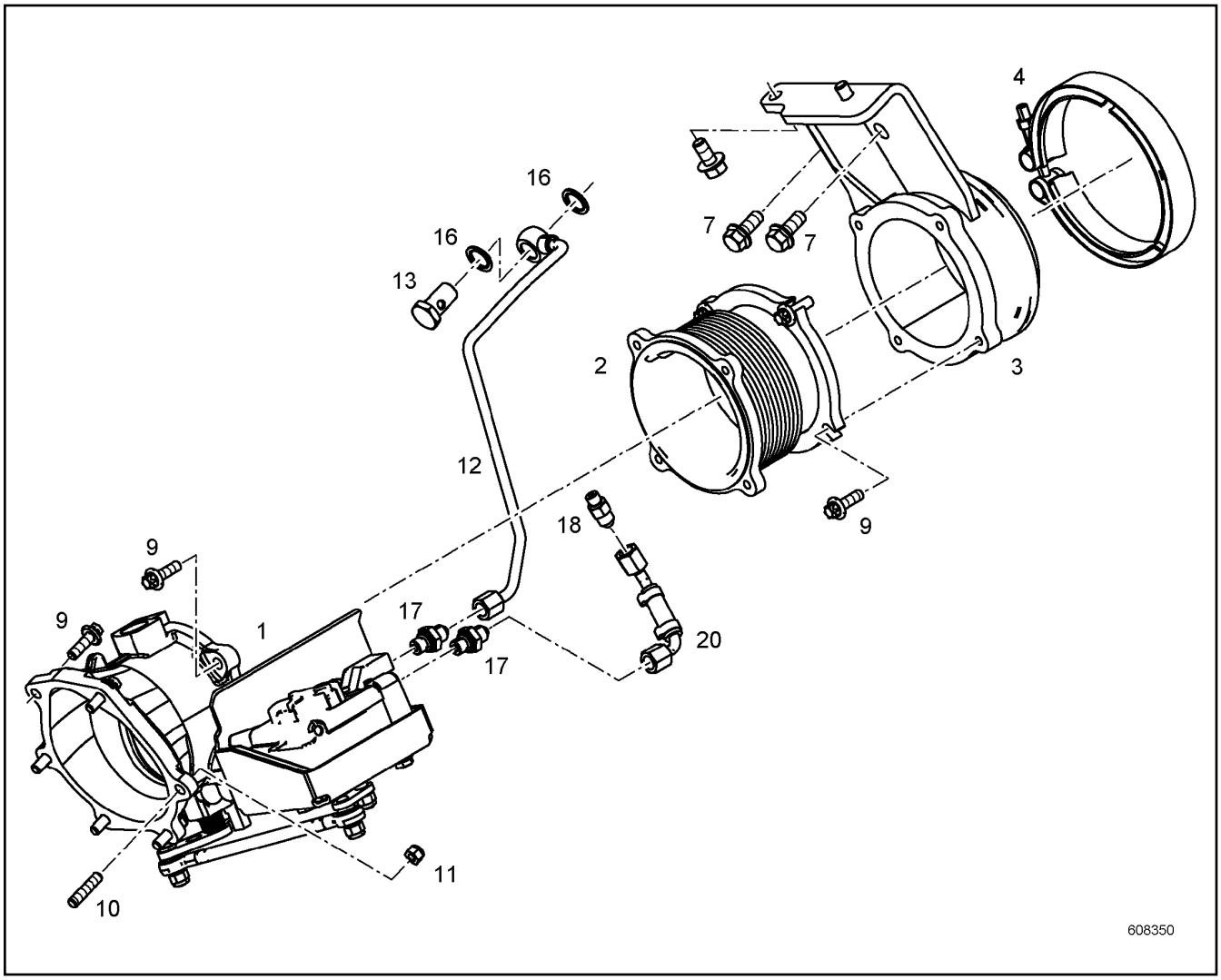

Pos.	Item	Quantity	Description	Bezeichnung	Serie	K
1	10153118	1	EXHAUST FLAP	ABGASKLAPPE		
2	10149145	1	COMPENSATOR	KOMPENSATOR		
3	10146274	1	EXHAUST NOZZLE	ABGASSTUTZEN		
4	10138820	1	RETAINER CLIP	SPANNSCHELLE		
7	10219458	4	HEX SCREW DIN 6921 M10X30 10.9	SECHSKANTSCHRAUBE		
9	10127323	13	HEXALOBULAR HEAD SCREW M8X25 21CRM	SECHSRUNDSCHRAUBE		
10	11690424	1	DOUBLE-ENDED STUD DIN 939 M8X25	STIFTSCHRAUBE		
11	7381182	1	HEX NUT AEHNL.ISO 7042 M8 10	SECHSKANTMUTTER		
12	10145914	1	PIPELINE	ROHRLEITUNG		
13	4980741	1	HOLLOW SCREW DIN 7643 12X3	HOHLSCHRAUBE		
16	10011867	2	SEALING RING	DICHTRING		
17	10801399	2	FITTING	VERSCHRAUBUNG		
18	10813934	1	FITTING	VERSCHRAUBUNG		
20	11381601	1	COOLING WATER LINE	KUEHLWASSERLEITUNG		

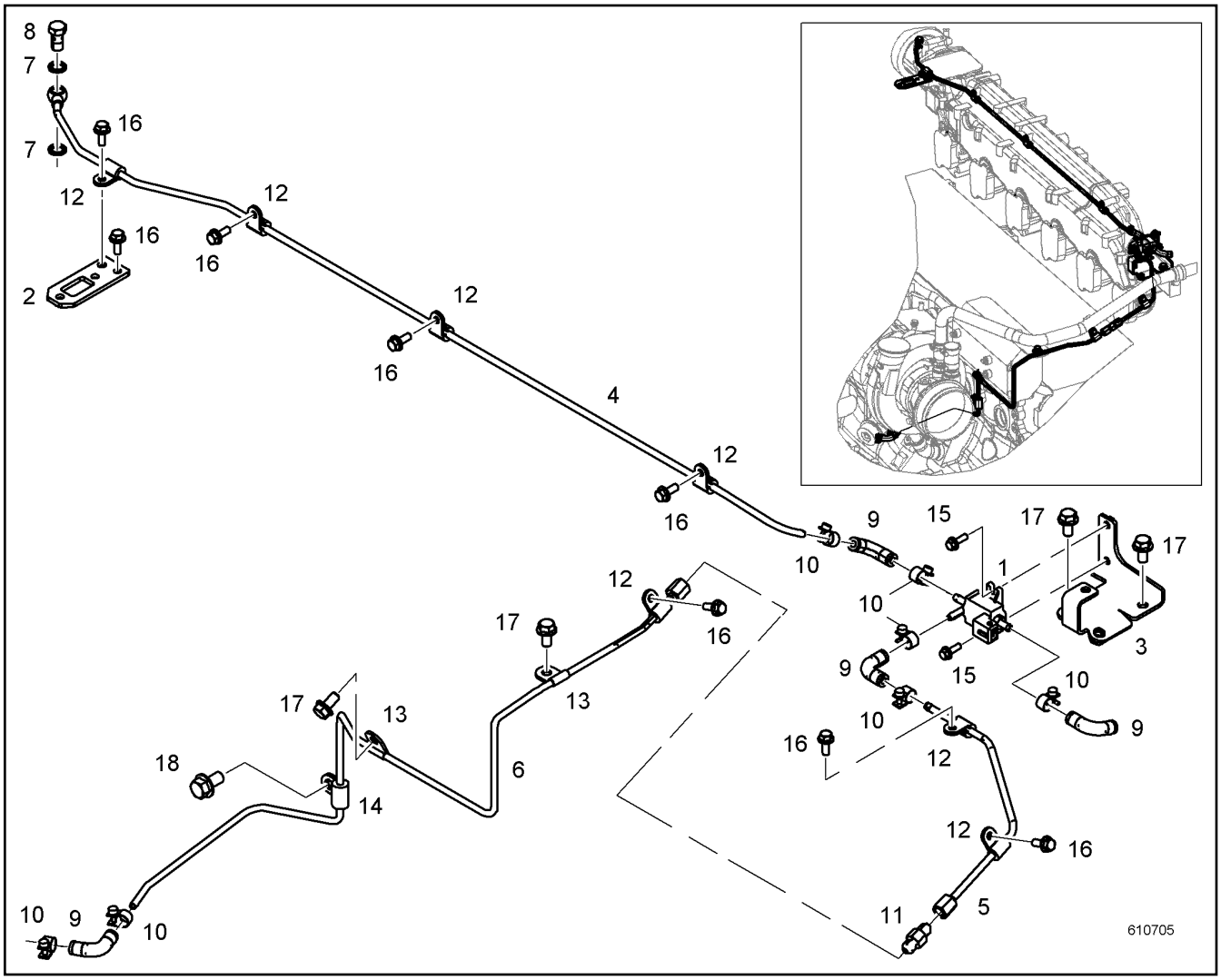

Pos.	Item	Quantity	Description	Bezeichnung	Serie	K
1	10149191	1	CYCLE VALVE	TAKTVENTIL		
2	10145373	1	HOLDER	HALTER		
3	10146836	1	HOLDER	HALTER		
4	10146838	1	PIPELINE	ROHRLEITUNG		
5	10146839	1	PIPELINE	ROHRLEITUNG		
6	10146840	1	PIPELINE	ROHRLEITUNG		
7	10011864	2	SEALING RING	DICHTRING		
8	4079160	1	HOLLOW SCREW DIN 7643 M10X1	HOHLSCHRAUBE		
9	10128228	4	RUBBER CONNECTION	GUMMIMUFFE		
10	11005281	7	HOSE CLAMP	SCHLAUCHSCHELLE		
11	10334218	1	FITTINGS	STUTZEN		
12	7381292	7	CLAMP	SCHELLE		
13	11000593	2	CLAMP	SCHELLE		
14	9077164	1	PIPE CLAMP	ROHRSCHELLE		
15	12207547	2	HEX SCREW EN 1665 M5X16 8.8	SECHSKANTSCHRAUBE		
16	407350208	8	HEX SCREW EN 1665 M6X16 8.8	SECHSKANTSCHRAUBE		
17	10005078	4	HEX SCREW EN 1665 M8X16 8.8	SECHSKANTSCHRAUBE		
18	10030518	1	HEX SCREW EN 1665 M10X20 8.8	SECHSKANTSCHRAUBE		

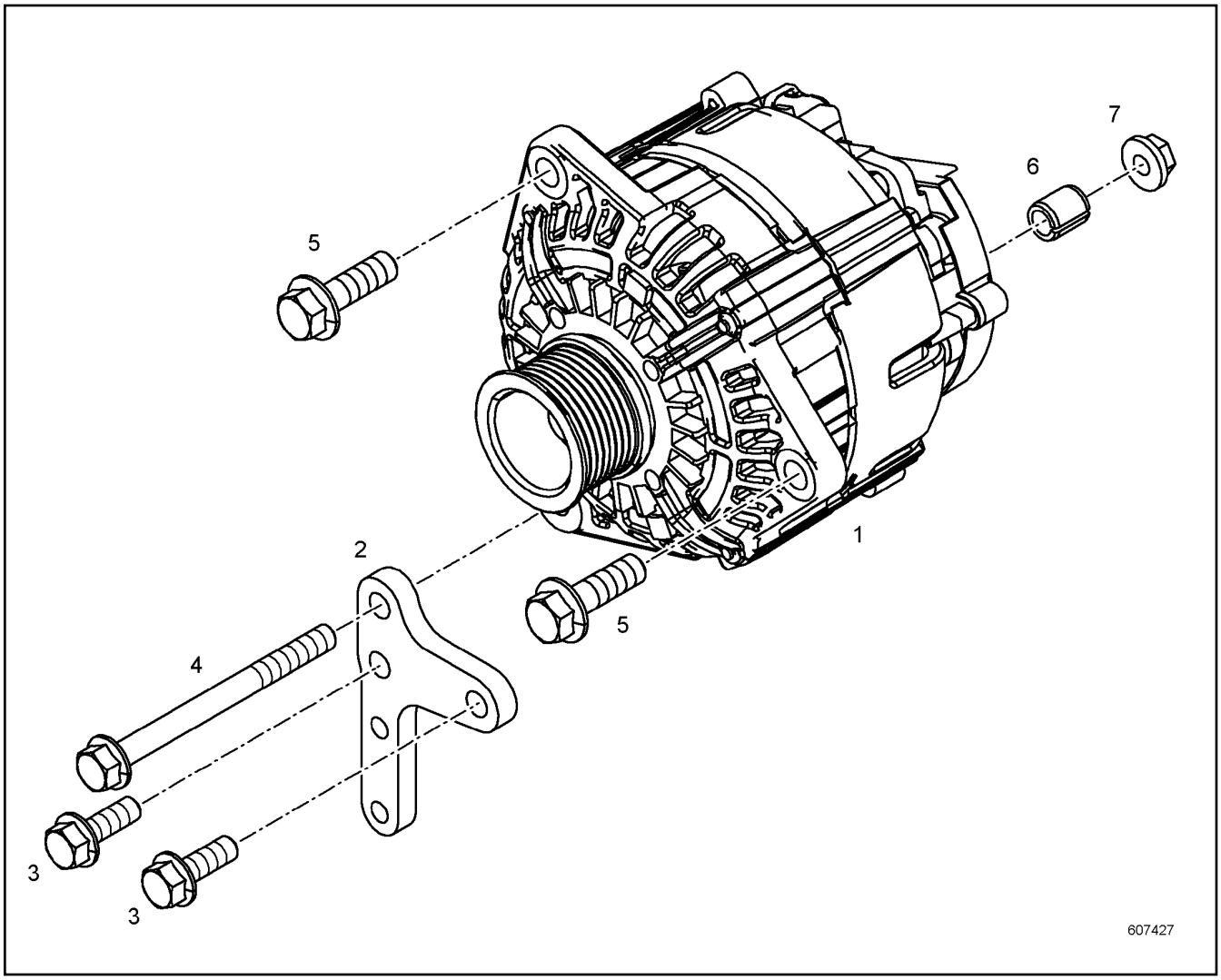

Pos.	Item	Quantity	Description	Bezeichnung	Serie	K
1	10148088	1	THREE PHASE CURRENT GENERATOR	DREHSTROMGENERATOR		
2	10149477	1	MOUNTING SHEET	BEFESTIGUNGSBLECH		
3	10219458	2	HEX SCREW DIN 6921 M10X30 10.9	SECHSKANTSCHRAUBE		
4	10113710	1	HEX SCREW EN 1665 M10X120 8.8	SECHSKANTSCHRAUBE		
5	4601426	2	HEX SCREW EN 1665 M12X40 8.8	SECHSKANTSCHRAUBE		
6	10145395	1	BUSHING	BUCHSE		
7	4980805	1	HEX NUT EN 1661 M10 8	SECHSKANTMUTTER		

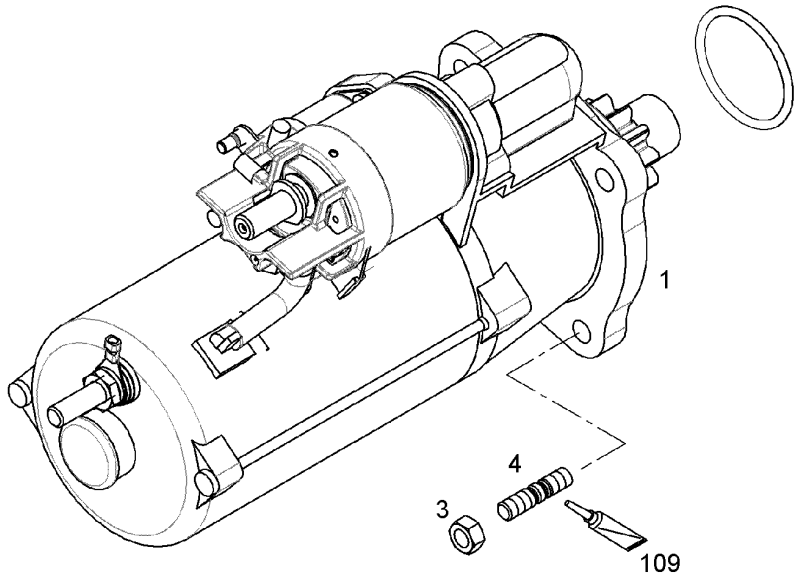

604428

Pos.	Item	Quantity	Description	Bezeichnung	Serie	K
1	11386645	1	STARTER ⇨ ❑ 297	STARTER		
3	4980805	3	HEX NUT EN 1661 M10 8	SECHSKANTMUTTER		
4	4901450	3	DOUBLE-ENDED STUD DIN 835 M10X30 8.8	STIFTSCHRAUBE		
109	8655016	1	SCREW LOCKING	SCHRAUBENSICHERUNG		

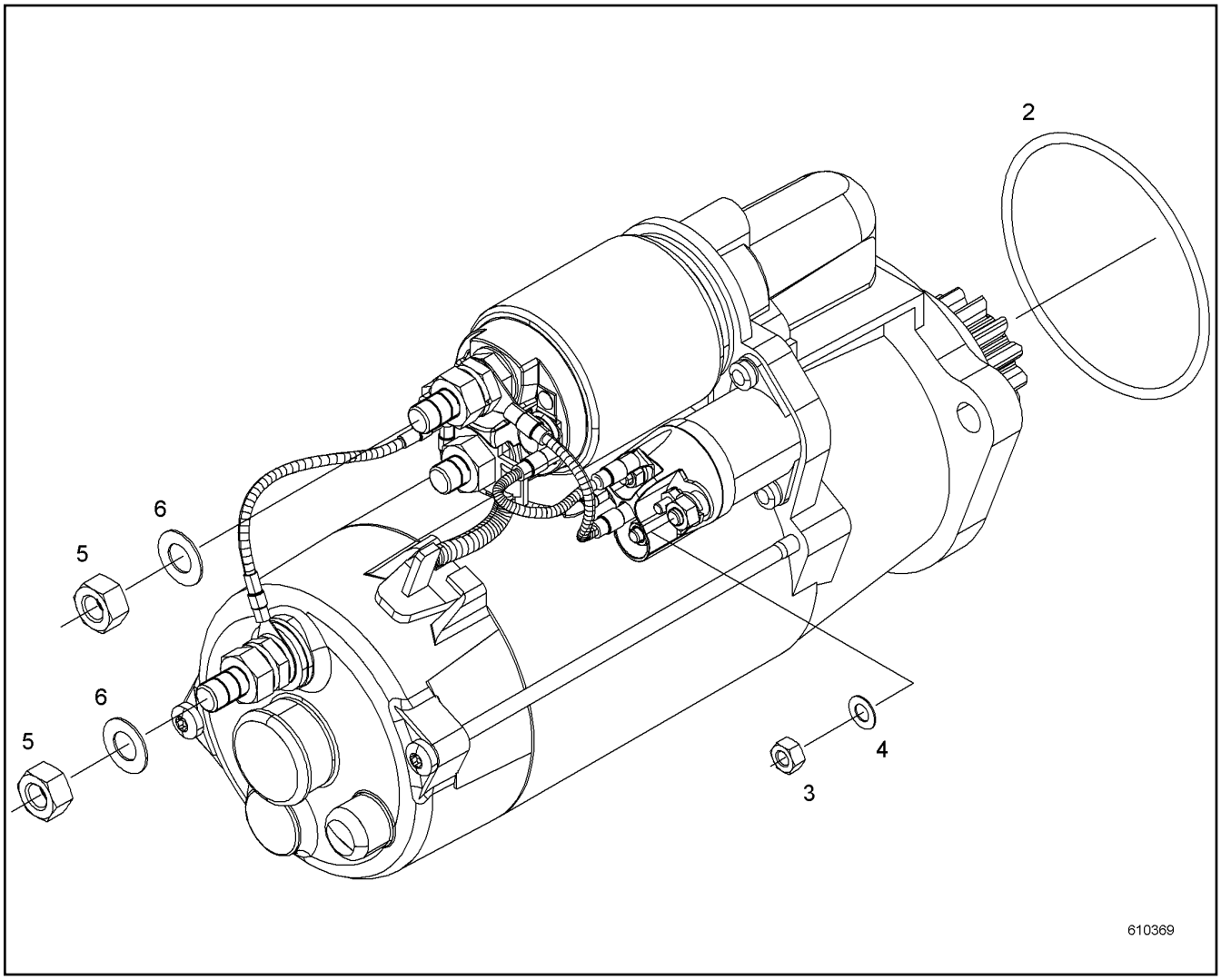

Pos.	Item	Quantity	Description	Bezeichnung	Serie	K
2	10218370	1	O-RING	O-RING		
3	10411094	1	HEX NUT M6 8	SECHSKANTMUTTER		
4	10411092	1	SPRING WASHER DIN 137 X10CRNI18-8;EN 10	FEDERSCHEIBE		
5	10411095	2	HEX NUT 8	SECHSKANTMUTTER		
6	10411093	2	SPRING WASHER DIN 137 X10CRNI18-8;EN 10	FEDERSCHEIBE		

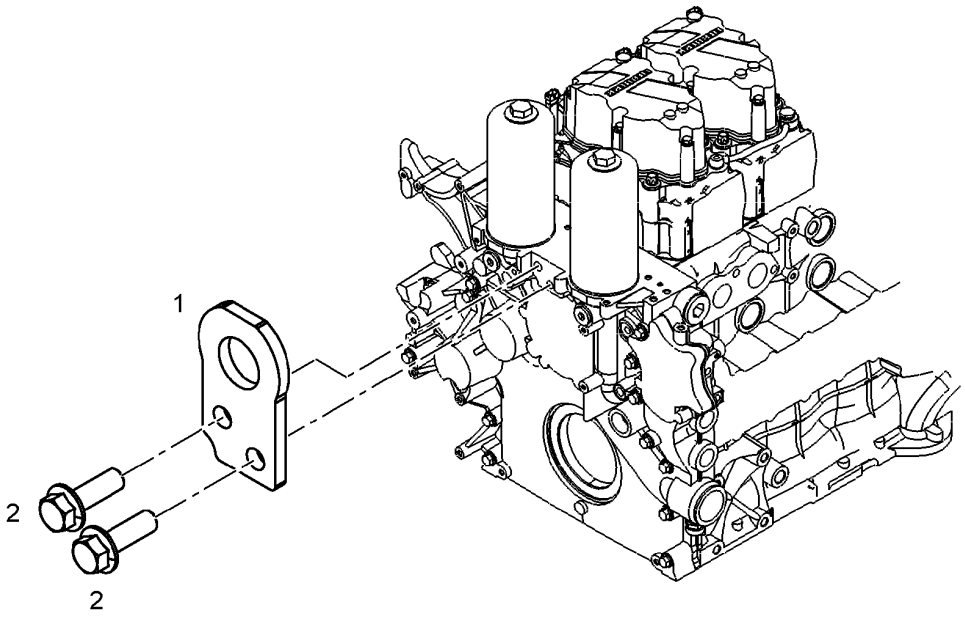

607420

Pos.	Item	Quantity	Description	Bezeichnung	Serie	K
1	10145229	1	TRANSPORTER CONSOLE	TRANSPORTKONSOLE		
2	11181806	2	HEX SCREW DIN 6921 M16X50 8.8	SECHSKANTSCHRAUBE		

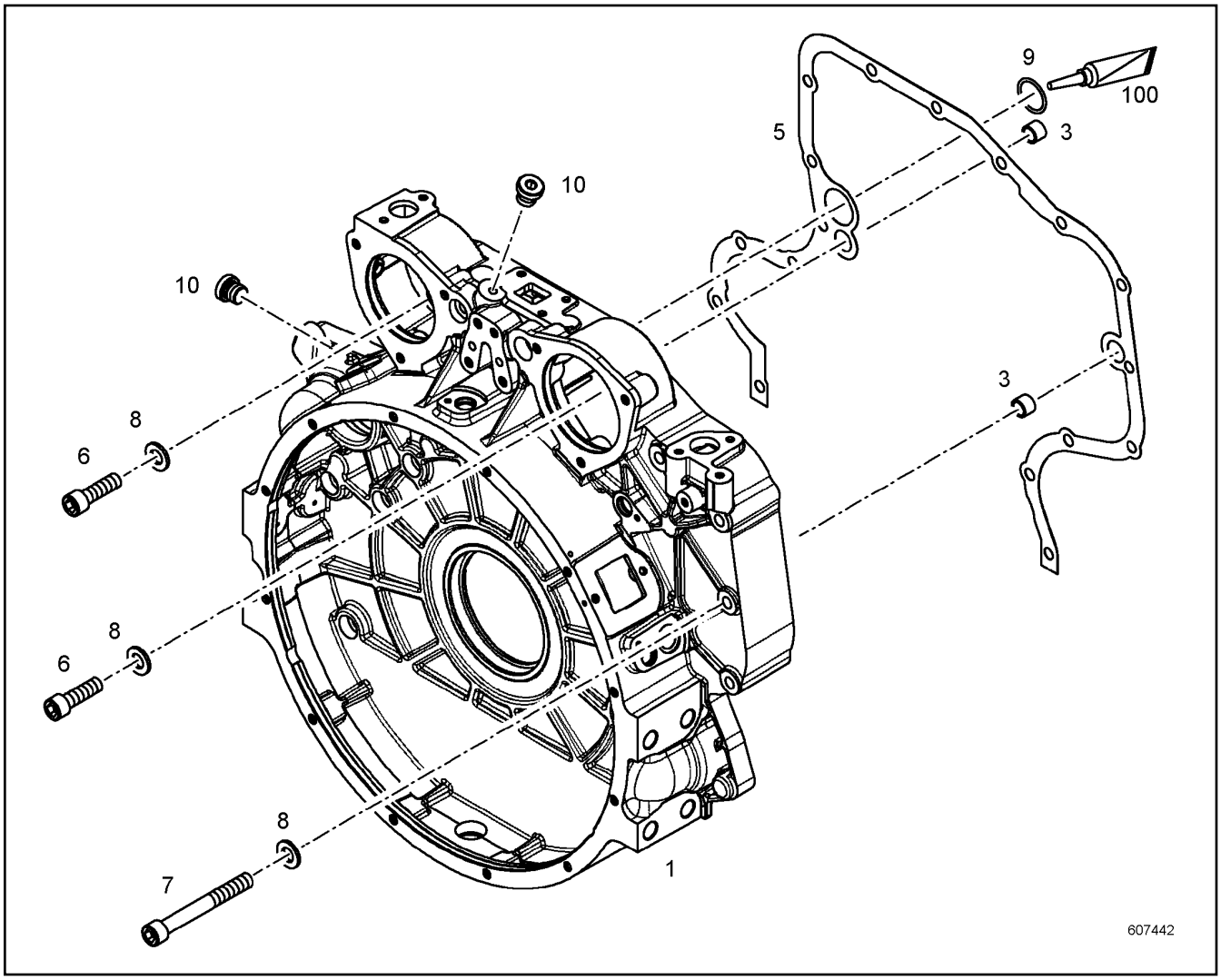

Pos.	Item	Quantity	Description	Bezeichnung	Serie	K
1	10115576	1	FLYWHEEL HOUSING PRE-ASS.	SCHWUNGRADGEHAEUSE VORM		
3	9074798	2	TIGHT FIT SLEEVE 16X20X20 S235JR;EN 1002	PASSHUELSE		
5	10137721	1	SEAL	DICHTUNG		
6	4980012	2	SOCKET HEAD SCREW ISO 4762 M12X40 10.9	ZYLINDERSCHRAUBE		
7	4600385	15	SOCKET HEAD SCREW ISO 4762 M12X100 10.	ZYLINDERSCHRAUBE		
8	10289804	17	WASHER ISO 7089 13	SCHEIBE		
9	7380653	1	O-RING	O-RING		
10	7381638	2	SCREW PLUG	VERSCHLUSSSCHRAUBE		
100	10282622	1	GREASE	FETT		

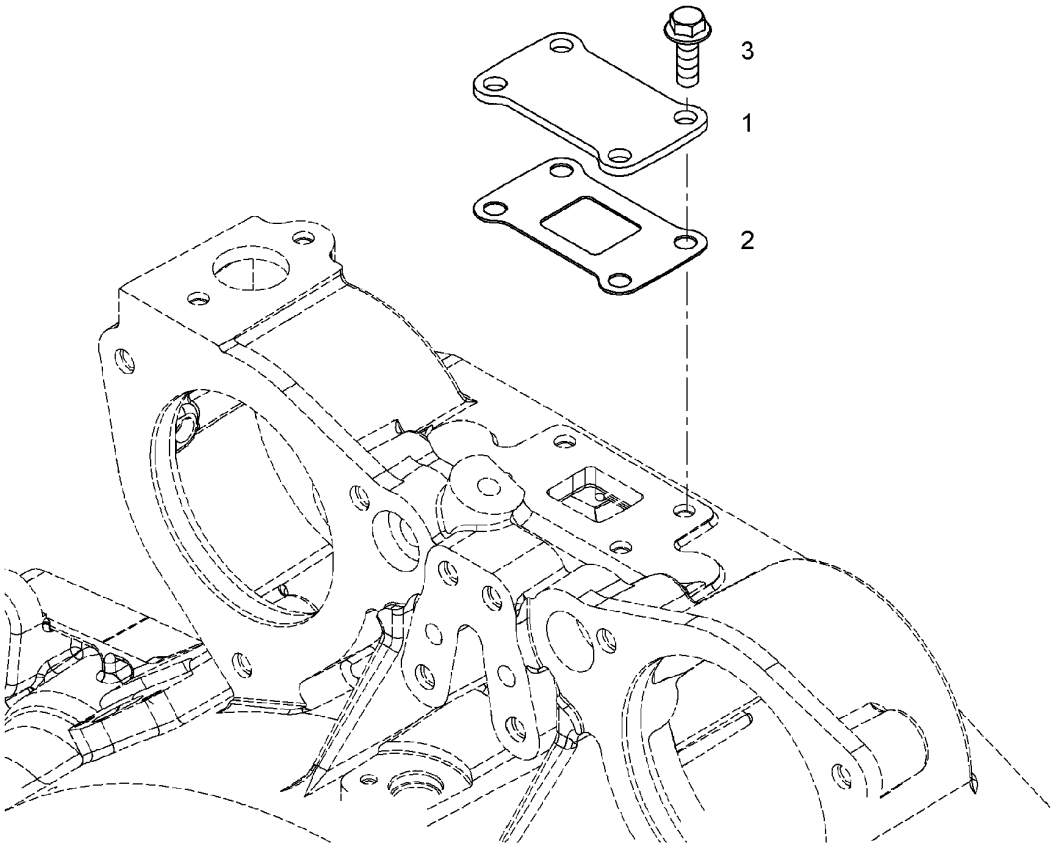

Pos.	Item	Quantity	Description	Bezeichnung	Serie	K
1	10119129	1	SHEET	PLATTE		
2	9079130	1	SEAL	DICHTUNG		
3	10016906	4	HEX SCREW EN 1665 M8X20 8.8	SECHSKANTSCHRAUBE		

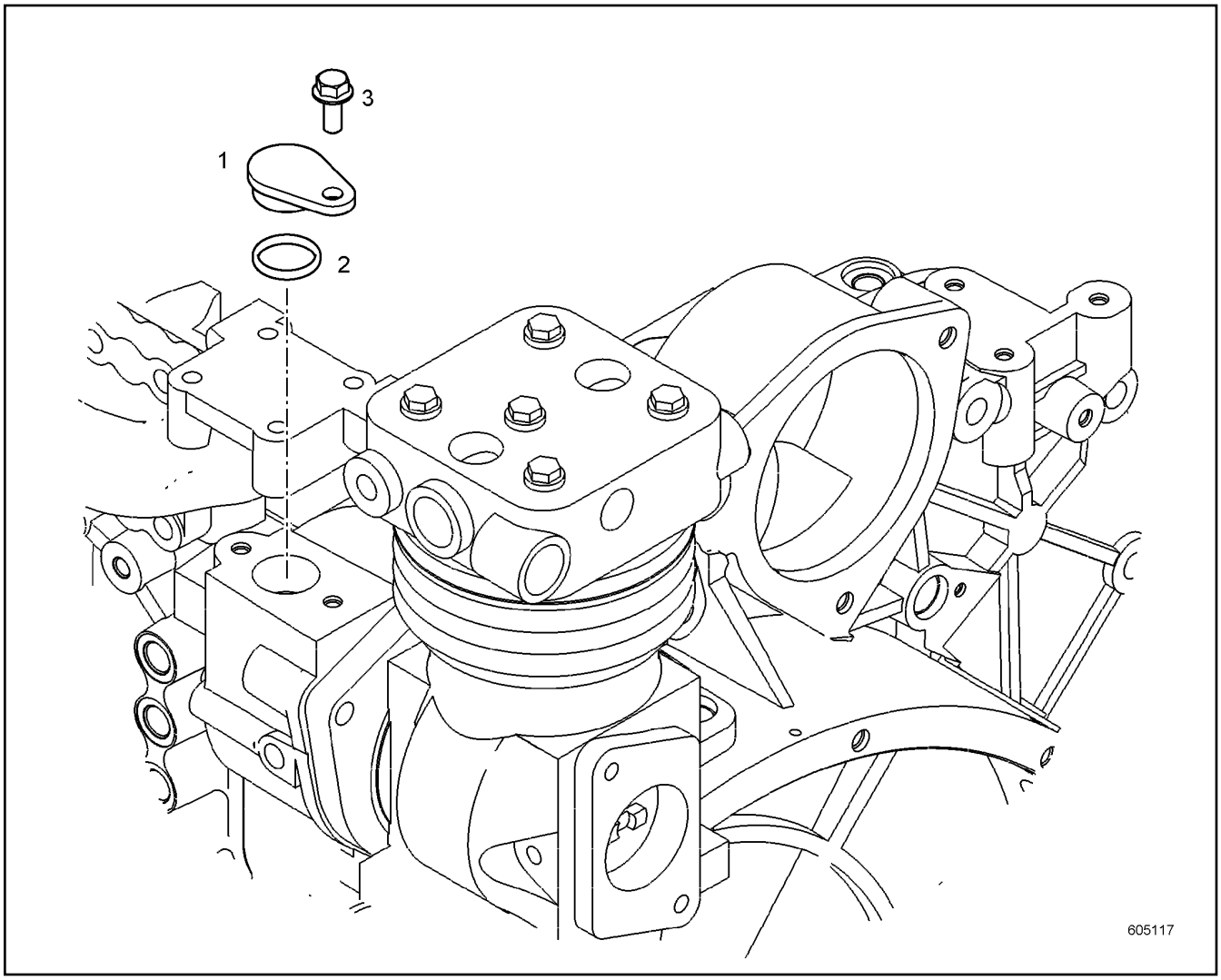

Pos.	Item	Quantity	Description	Bezeichnung	Serie	K
1	10128440	1	LOCKING PIECES	VERSCHLUSSTEILE		
2	10217777	1	O-RING	O-RING		
3	10016906	1	HEX SCREW EN 1665 M8X20 8.8	SECHSKANTSCHRAUBE		

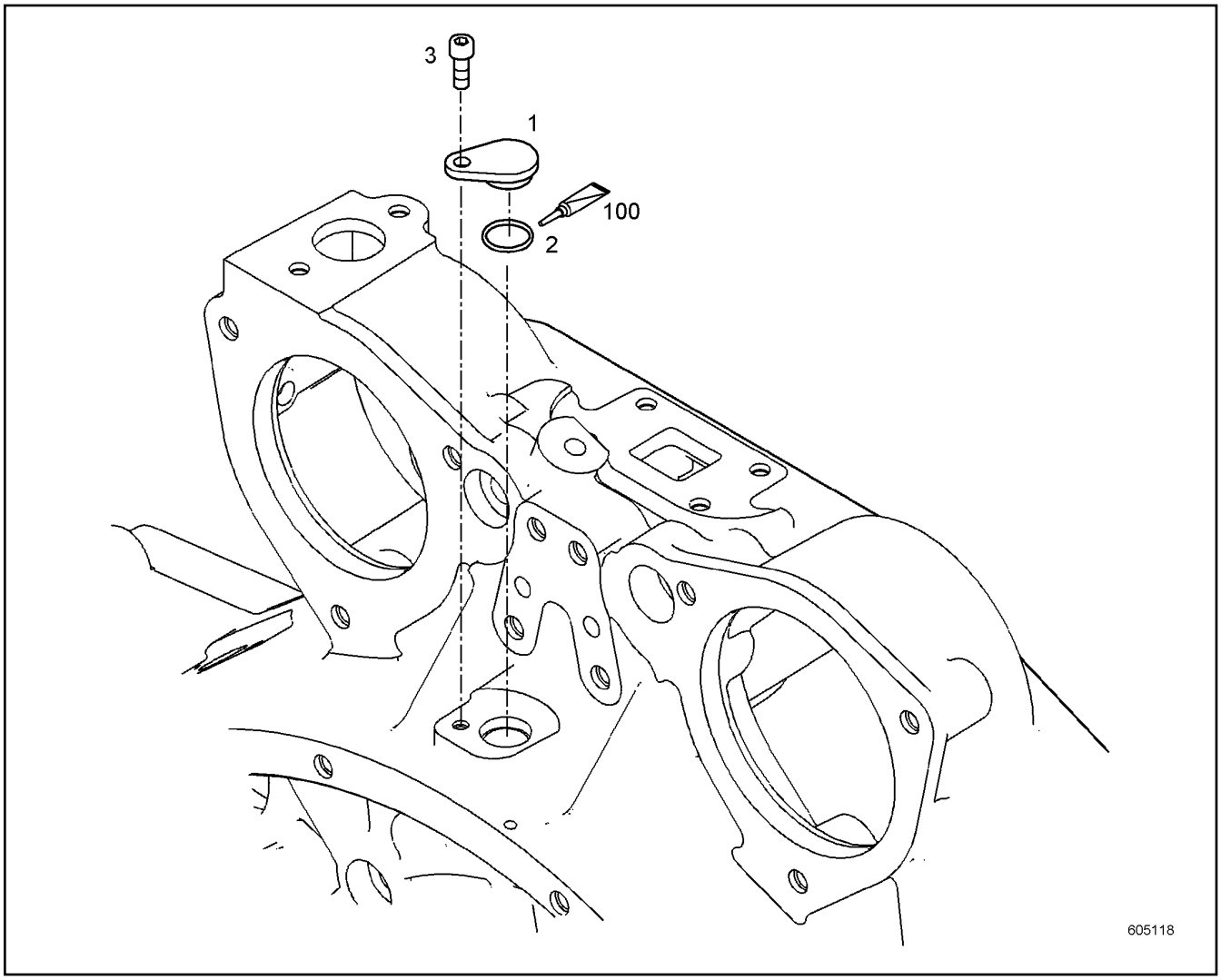

Pos.	Item	Quantity	Description	Bezeichnung	Serie	K
1	10127967	1	COVER	DECKEL		
2	7381103	1	O-RING	O-RING		
3	404250914	1	SOCKET HEAD SCREW ISO 4762 M6X16 A4-7	ZYLINDERSCHRAUBE		
100	10282622	1	GREASE	FETT		

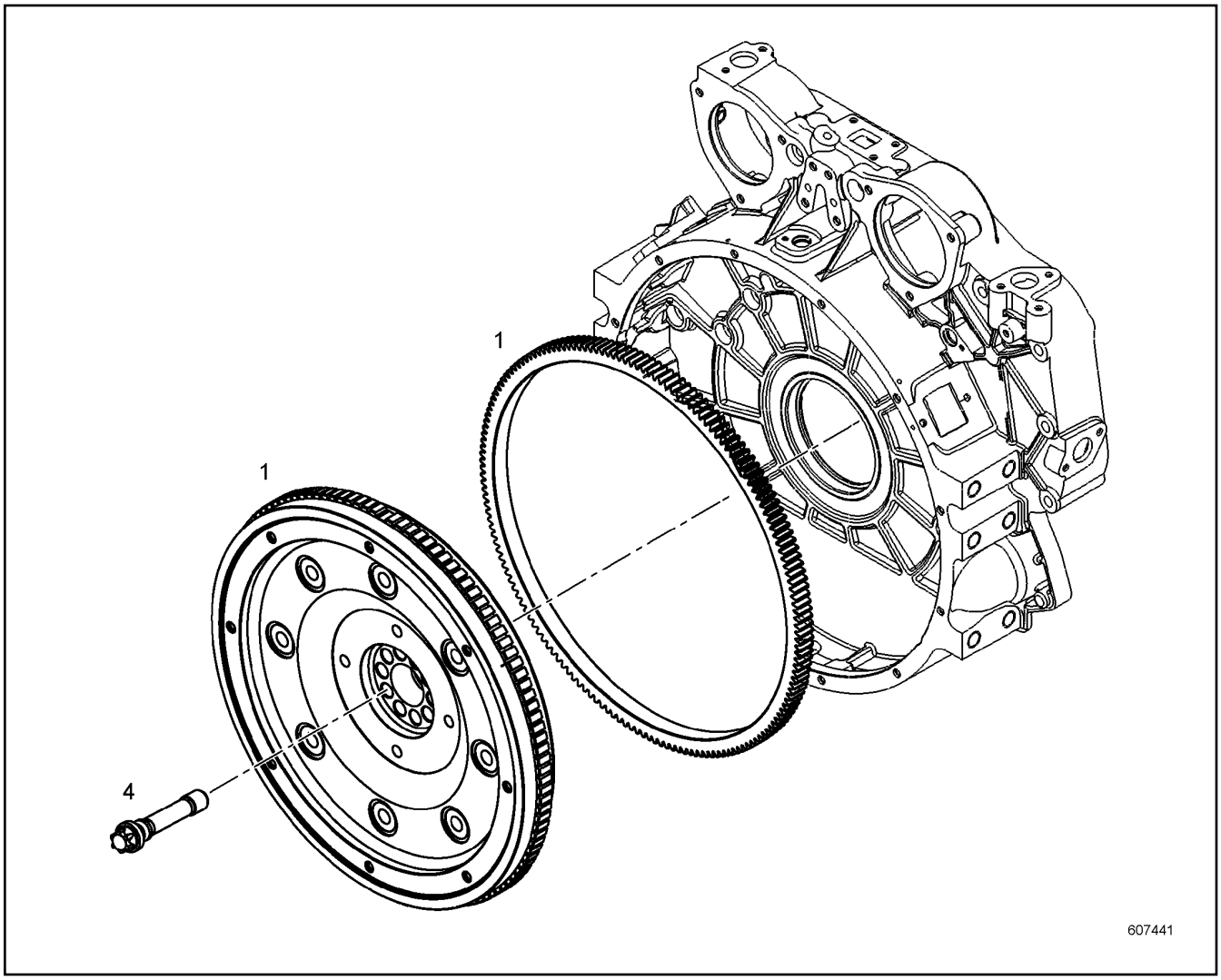

Pos.	Item	Quantity	Description	Bezeichnung	Serie	K
1	10118928	1	FLYWHEEL PRE-ASS.	SCHWUNGRAD VORM.		
4	10118912	10	HEXALOBULAR HEAD SCREW M16X147 10.9	SECHSRUNDSCHRAUBE		

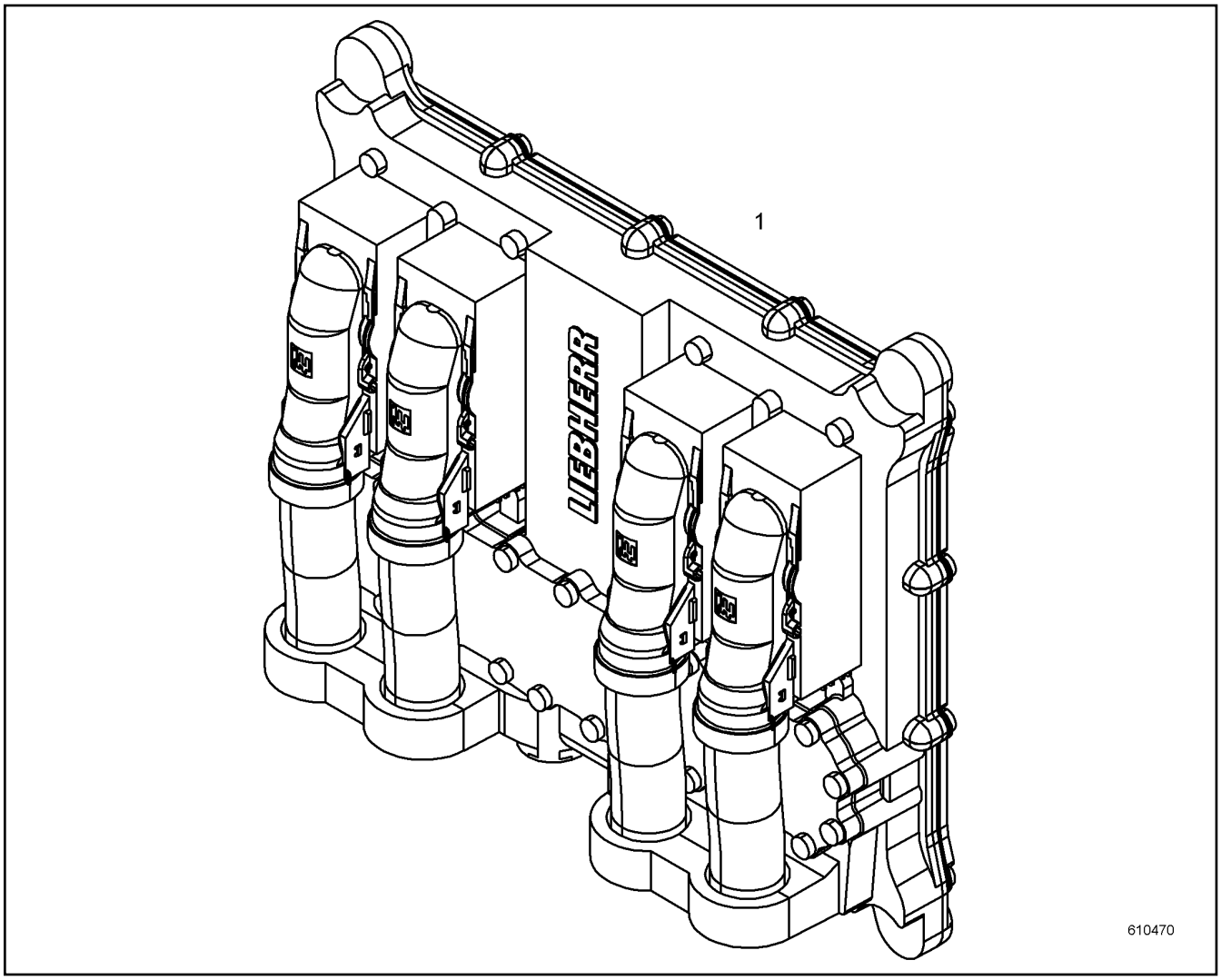

Pos.	Item	Quantity	Description	Bezeichnung	Serie	K
1	10883842	1	MOTOR CONTROL DEVICE	MOTORSTEUERGERAET		

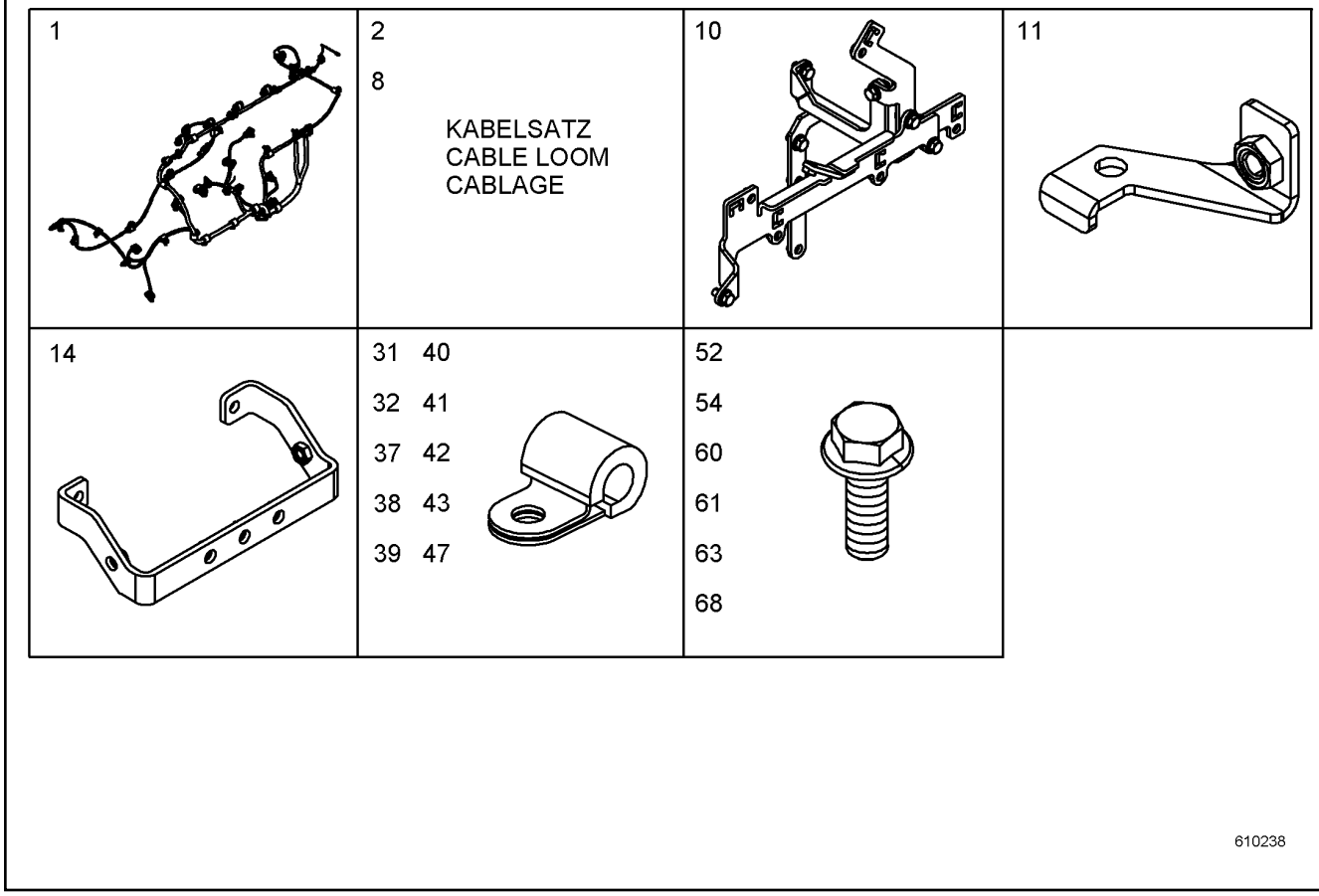

Pos.	Item	Quantity	Description	Bezeichnung	Serie	K
1	12403954	1	CABLE HARNESS	KABELBAUM		
2	10150287	1	WIRING HARNESS ASSEMBLY	KABELSATZ ANBAU		
8	11425228	1	WIRING HARNESS ASSEMBLY	KABELSATZ ANBAU		
10	10146587	1	CLAMP - ADD-ON UNIT	HALTER ANBAU		
11	10144123	1	HOLDER	HALTER		
14	10146405	1	HOLDER	HALTER		
31	7381771	1	CLAMP	SCHELLE		
32	7381770	4	CLAMP	SCHELLE		
37	7382090	5	CLAMP	SCHELLE		
38	7381628	2	CLAMP	SCHELLE		
39	7381629	6	CLAMP	SCHELLE		
40	7382085	2	FASTENING CLAMP	HALTERUNGSSCHELLE		
41	7381635	3	CLAMP	SCHELLE		
42	7381630	2	CLAMP	SCHELLE		
43	7381631	1	CLAMP	SCHELLE		
47	7382092	2	CLAMP	SCHELLE		
52	12207546	2	HEX SCREW EN 1665 M5X10 8.8	SECHSKANTSCHRAUBE		
54	407350208	5	HEX SCREW EN 1665 M6X16 8.8	SECHSKANTSCHRAUBE		
60	10005078	3	HEX SCREW EN 1665 M8X16 8.8	SECHSKANTSCHRAUBE		
61	10016906	22	HEX SCREW EN 1665 M8X20 8.8	SECHSKANTSCHRAUBE		
63	10007782	1	HEX SCREW EN 1665 M8X30 8.8	SECHSKANTSCHRAUBE		
68	10030518	2	HEX SCREW EN 1665 M10X20 8.8	SECHSKANTSCHRAUBE		
93	9132577	1	DISTANCE SLEEVE 18X8.5X10	DISTANZHUELSE		
99	603202314	2	CABLE TIE	KABELBINDER		
103	10123876	2	RUBBER RING	GUMMIRING		

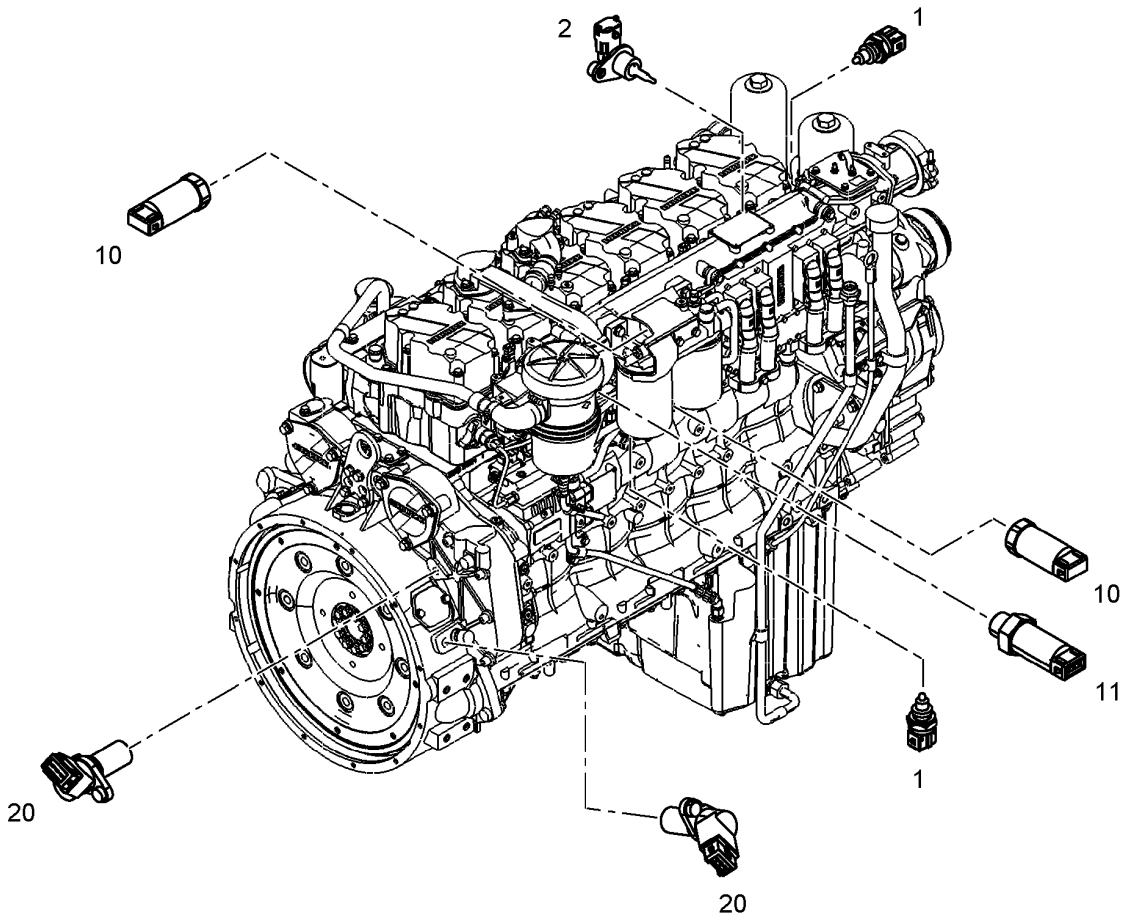

Pos.	Item	Quantity	Description	Bezeichnung	Serie	K
1	10493626	2	TEMPERATURE SENSOR	TEMPERATURFUEHLER		
2	10152036	1	TEMPERATURE PROBE CPL.	TEMPERATURFUEHLER KPL.		
10	9076531	2	PRESSURE TRANSMITTER	DRUCKGEBER		
11	9076550	1	PRESSURE TRANSMITTER CPL.	DRUCKGEBER KPL.		
20	10133077	2	ROTATIONAL SPEED SENSOR CPL.	DREHZAHLGEBER KPL.		

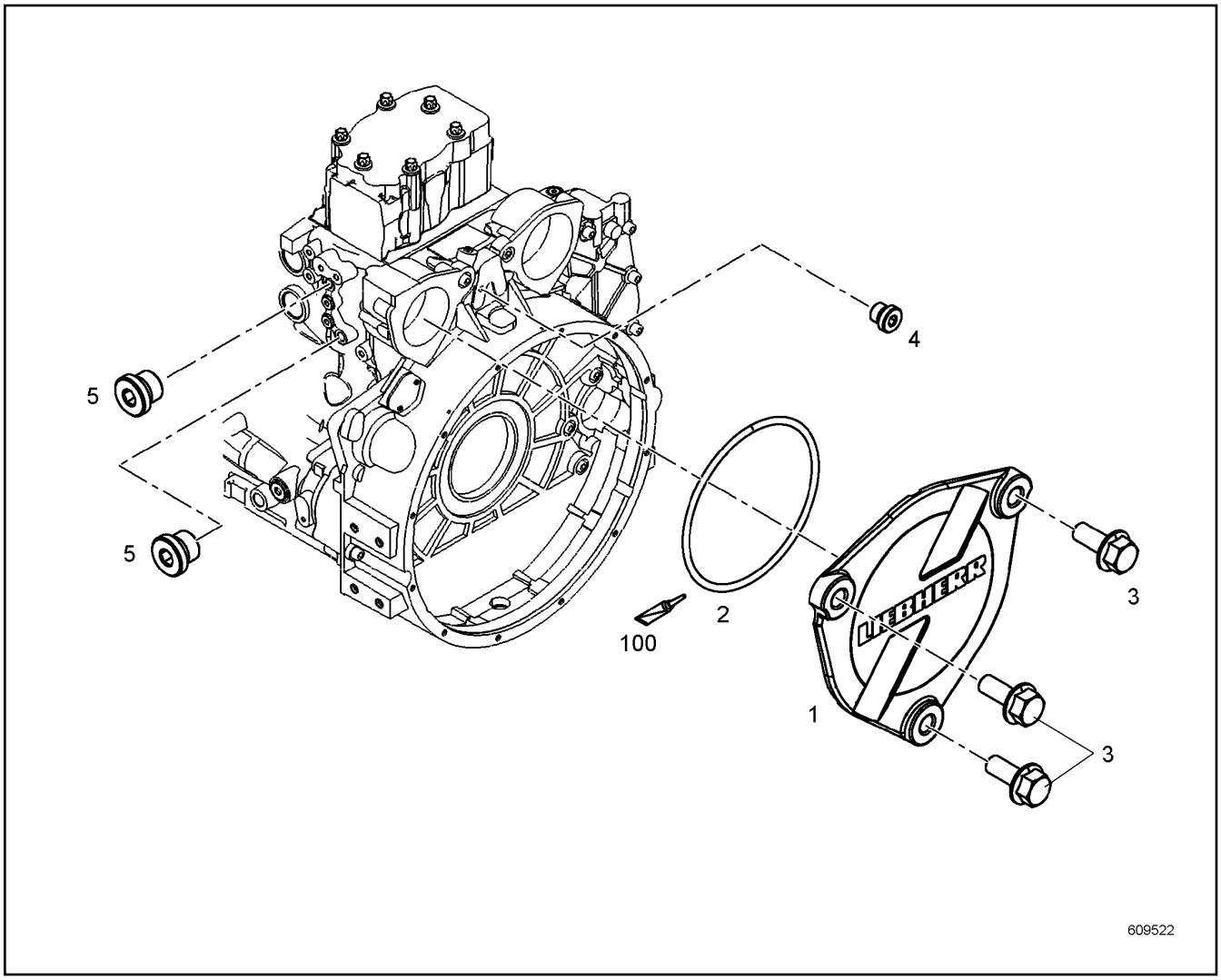

Pos.	Item	Quantity	Description	Bezeichnung	Serie	K
1	10122317	1	COVER	DECKEL		
2	7380657	1	O-RING	O-RING		
3	10336008	3	HEX SCREW DIN 6921 M10X25 8.8	SECHSKANTSCHRAUBE		
4	7381638	1	SCREW PLUG	VERSCHLUSSSCHRAUBE		
5	7382203	2	SCREW PLUG	VERSCHLUSSSCHRAUBE		
100	10285708	1	GREASE	FETT		

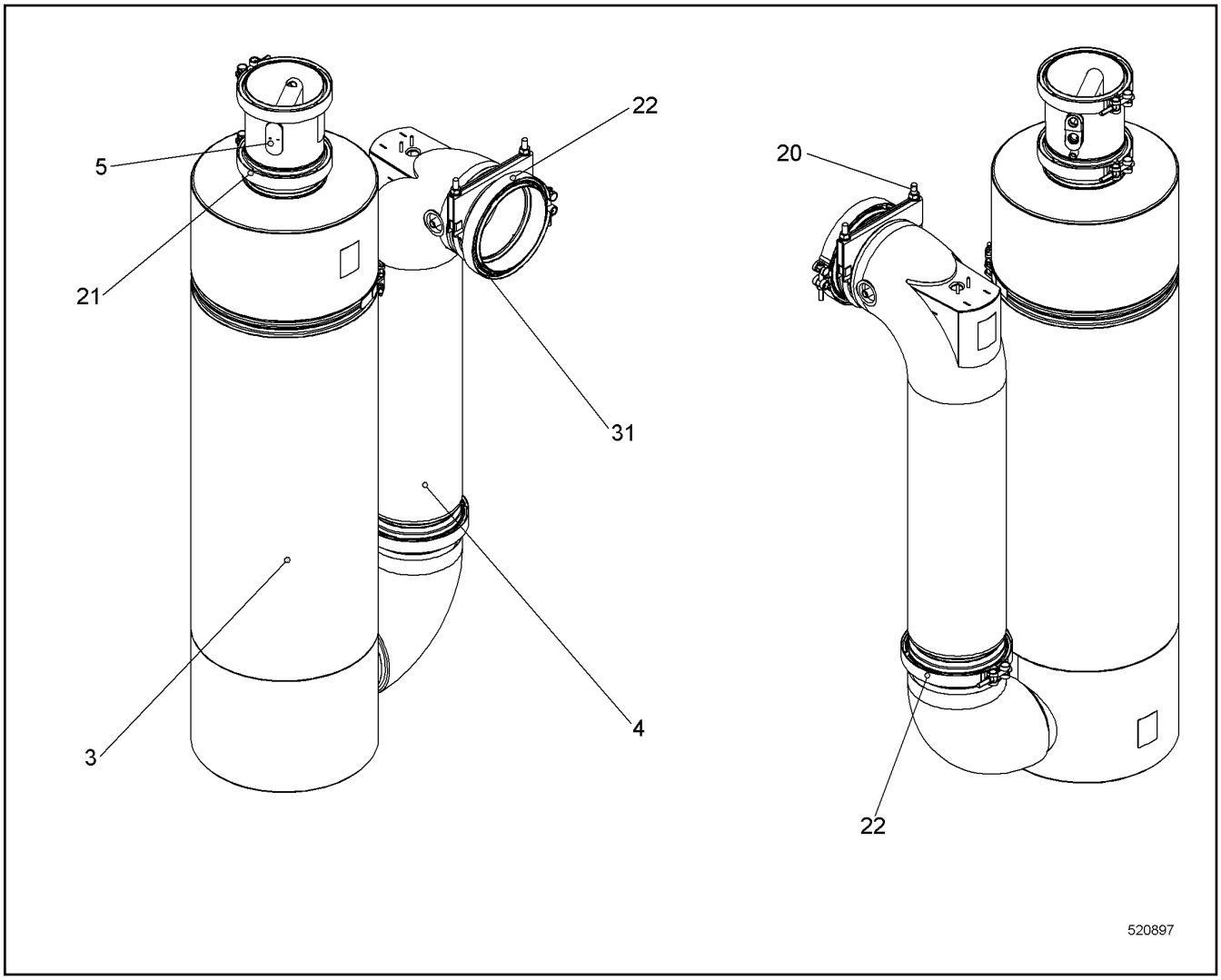

Pos.	Item	Quantity	Description	Bezeichnung	Serie	K
3	11403711	1	SCR CPL. ⇨ ❑ 309	SCR KPL.		
4	10148669	1	EXHAUST MIXING PIPE	ABGASMISCHROHR		
5	10144086	1	MIXER	MISCHER		
20	10144699	1	BOW-TYPE CLAMP	BUEGELSCHELLE		
21	10494116	2	PROFIL CLAMP	PROFILSCHELLE		
22	10494117	2	PROFIL CLAMP	PROFILSCHELLE		
31	10144102	1	SEAL	DICHTUNG		

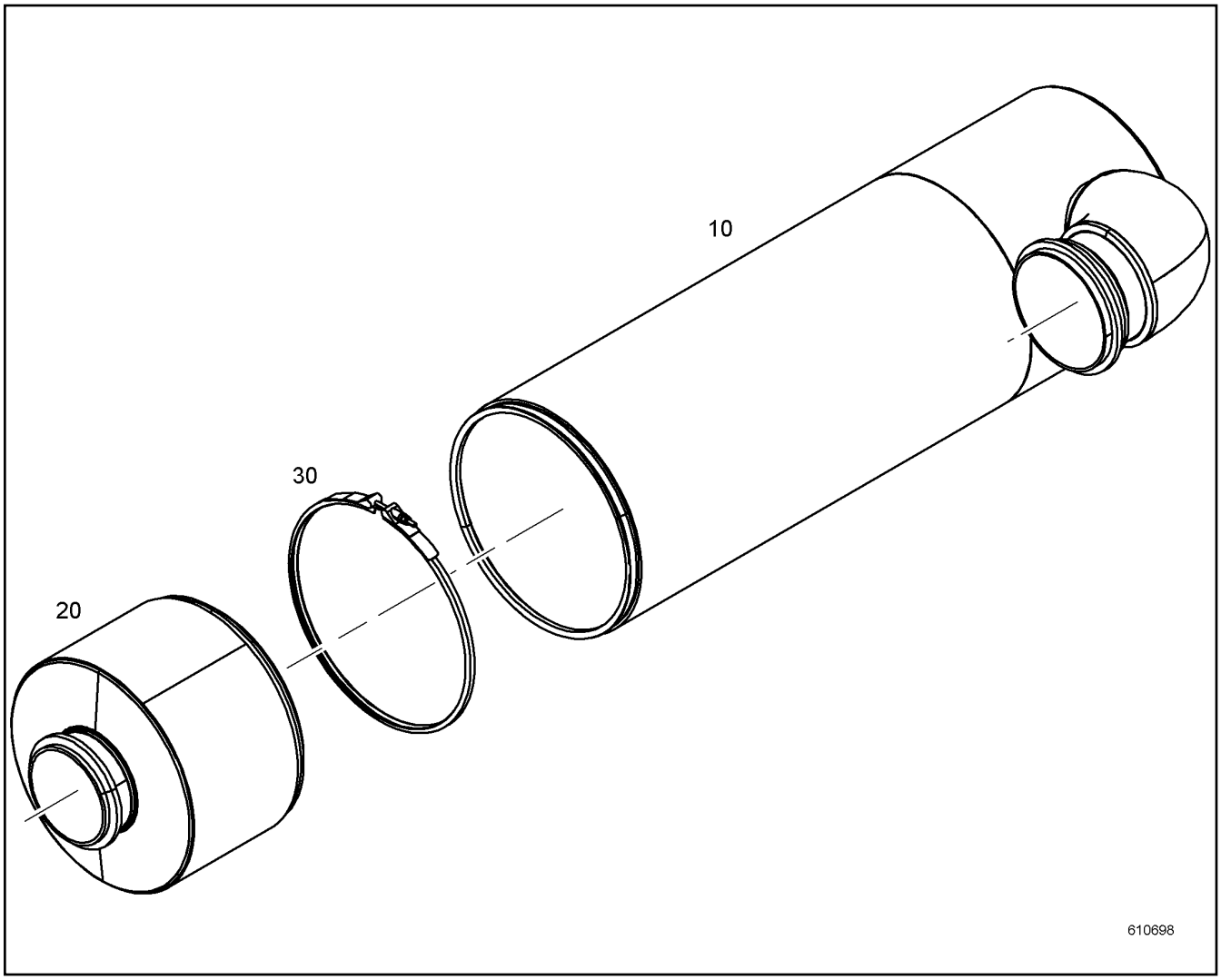

Pos.	Item	Quantity	Description	Bezeichnung	Serie	K
10	10144034	1	INLET MODULE	EINGANGSMODUL		
20	11403695	1	OUTLET MODULE	AUSGANGSMODUL		
30	10141051	1	PROFIL CLAMP	PROFILSCHELLE		

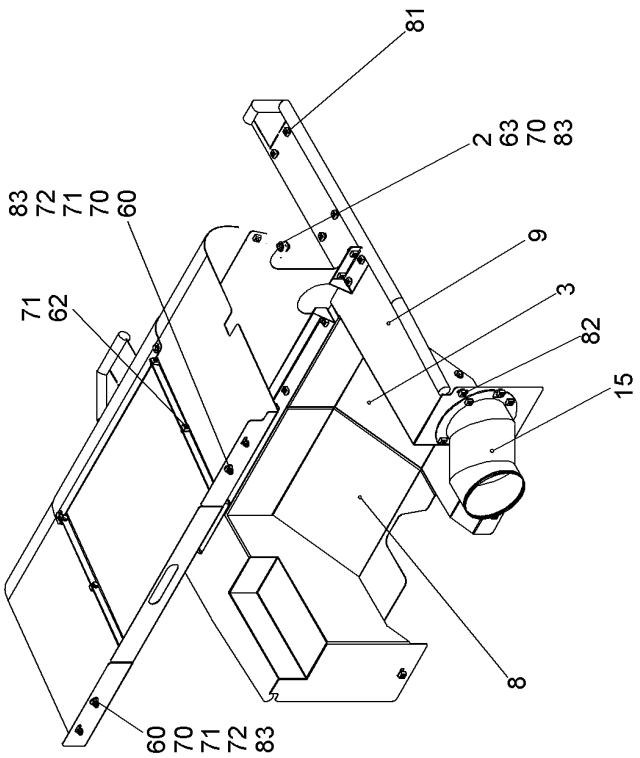
81
2
63
70
83
83
72
71
70
60
9
71
62
3
82
15
8
60
70
71
72
83

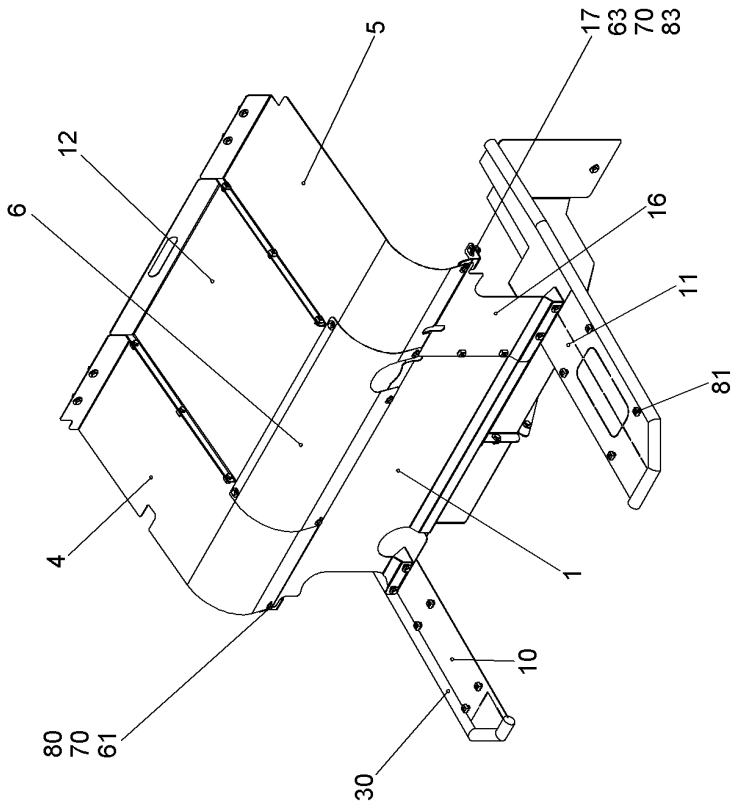
5
17
63
70
83
12
6
16
11
81
4
1
10
80
70
61
30

519126

Pos.	Item	Quantity	Description	Bezeichnung	Serie	K
1	11252203	1	COVER	ABDECKUNG		
2	11252207	1	COVER	ABDECKUNG		
3	11252211	1	COVER	ABDECKUNG		
4	11252214	1	COVER	ABDECKUNG		
5	11252215	1	COVER	ABDECKUNG		
6	11252216	1	COVER	ABDECKUNG		
8	11252208	1	COVER	ABDECKUNG		
9	11252213	1	COVER	ABDECKUNG		
10	10583346	1	COVER	ABDECKUNG		
11	10583347	1	COVER	ABDECKUNG		
12	11262861	1	COVER	ABDECKUNG		
15	11252578	1	SUCTION PIPE AIR	ANSAUGROHR LUFT		
16	11252205	1	COVER	ABDECKUNG		
17	11252206	1	COVER	ABDECKUNG		
30	7014524	4.5	CLAMPING PROFILE	KLEMMPROFIL		
60	406511614	4	HEX SCREW ISO 4017 M10X30 A4-70	SECHSKANTSCHRAUBE		
61	406511914	40	HEX SCREW ISO 4017 M10X25 A4-70	SECHSKANTSCHRAUBE		
62	406518714	10	HEX SCREW ISO 4017 M10X20 A4-70	SECHSKANTSCHRAUBE		
63	406509314	2	HEX SCREW ISO 4017 M10X35 A4-70	SECHSKANTSCHRAUBE		
70	10540511	51	WASHER ISO 7093-1 10 A4	SCHEIBE		
71	420001114	11	WASHER ISO 7089 10 A4	SCHEIBE		
72	421300214	2	WASHER DIN 6340 10.5 C35	SCHEIBE		
80	413003308	32	CAGE NUT M10-R-140-32	KAEFIGMUTTER		
81	413004408	8	CAGE NUT M10-R-140-62	KAEFIGMUTTER		
82	413003508	10	CAGE NUT M10-R-140-47	KAEFIGMUTTER		
83	10540494	6	HEX NUT ISO 10511 M10 A4	SECHSKANTMUTTER		

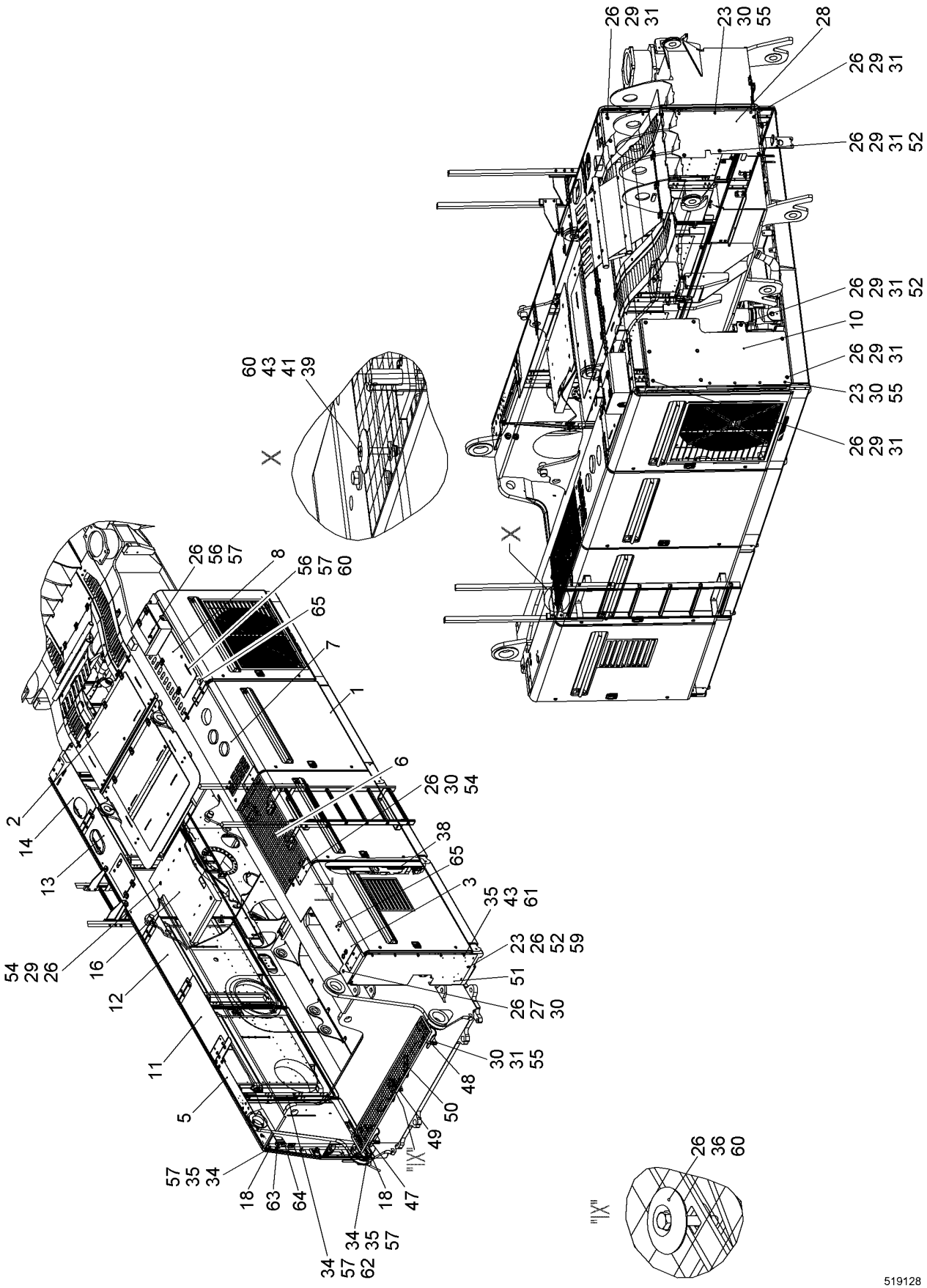
519128

Pos.	Item	Quantity	Description	Bezeichnung	Serie	K
1	11244091	1	COVERS ⇨ ❑ 316	VERKLEIDUNG		
2	10545910	1	MOTOR COWLING ⇨ ❑ 328	MOTORABDECKUNG		
3	10545911	1	ROOF	DACH		
4	10336682	1	WP	WP		
5	10545914	1	ROOF	DACH		
6	10545915	1	GRATING	GITTERROST		
7	10545916	1	ROOF	DACH		
8	10545917	1	ROOF	DACH		
9	11248969	2	BRACKET	BUEGEL		
10	10545918	1	SHEET	PLATTE		
11	10545957	1	ROOF	DACH		
12	10545958	1	ROOF	DACH		
13	11244865	1	ROOF	DACH		
14	11244758	1	ROOF	DACH		
15	11248991	2	ORIFICE	BLENDE		
16	10563073	1	ROOF	DACH		
17	11273242	4	SLIDEWAY 8/14X35 POM	GLEITFUEHRUNG		
18	11217232	4	PLATE	BLECH		
19	11248990	2	ORIFICE	BLENDE		
20	11248992	2	ORIFICE	BLENDE		
21	11248964	1	ORIFICE	BLENDE		
22	11248966	1	ORIFICE	BLENDE		
23	406511914	35	HEX SCREW ISO 4017 M10X25 A4-70	SECHSKANTSCHRAUBE		
24	406518614	5	HEX SCREW ISO 4017 M10X50 A4-70	SECHSKANTSCHRAUBE		
25	10563082	1	ANGLE	WINKEL		
26	10540511	134	WASHER ISO 7093-1 10 A4	SCHEIBE		
28	11244094	1	SHEET	PLATTE		
29	485550014	21	CAGE NUT M10-RR-140-62	KAEFIGMUTTER		
30	10540494	54	HEX NUT ISO 10511 M10 A4	SECHSKANTMUTTER		
31	406511614	28	HEX SCREW ISO 4017 M10X30 A4-70	SECHSKANTSCHRAUBE		
32	970857103	1	FILING DESK	PULTABLAGE		
33	10223693	2	HOLDER	HALTER		
34	420001014	21	WASHER ISO 7089 8 A4	SCHEIBE		
35	406501414	11	HEX SCREW ISO 4017 M8X25 A4-70	SECHSKANTSCHRAUBE		
36	10538807	5	HEX SCREW ISO 4017 M8X50 A4-70	SECHSKANTSCHRAUBE		
37	10225695	2	SHEET	PLATTE		
38	959465714	2	BRACKET	BUEGEL		
39	10331506	6	HEX SCREW ISO 4017 M8X55 A4-70	SECHSKANTSCHRAUBE		

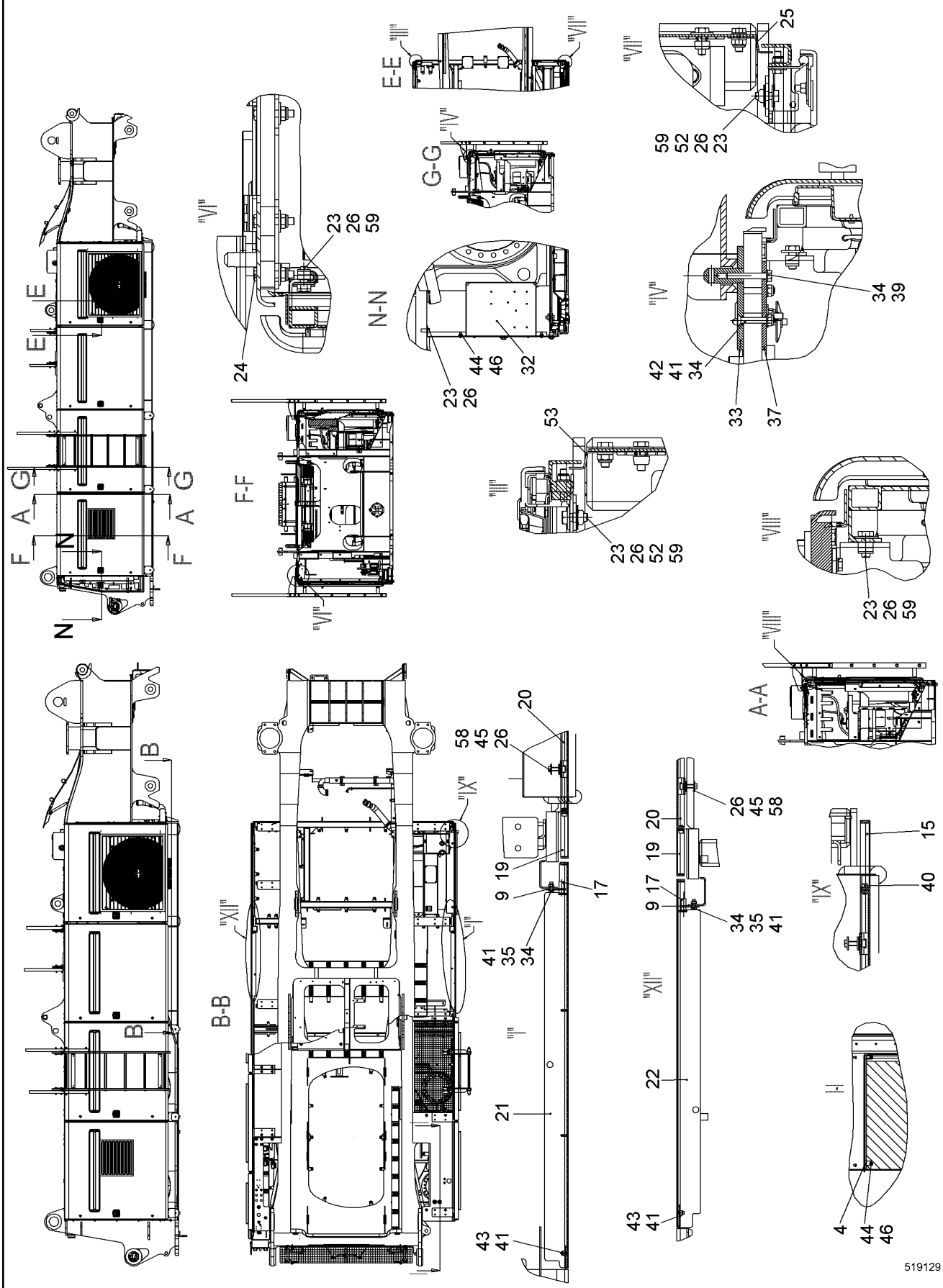

24.5.2017 519129	**138376_ETK_001**	❑ 314 (3/4)
LIEBHERR	**PANELLING SUPERSTR. INSTAL.CPL** **VERKLEIDUNG OW EINBAU KPL**	**11 24 409 0**

Pos.	Item	Quantity	Description	Bezeichnung	Serie	K
40	10539483	8	SOCKET HEAD SCREW ISO 4762 M8X16 A4-7	ZYLINDERSCHRAUBE		
41	10540493	23	HEX NUT ISO 10511 M8 A4	SECHSKANTMUTTER		
42	11910892	6	COUNTERSUNK SCREW ISO 10642 M8X50 A4	SENKSCHRAUBE		
43	10540510	13	WASHER ISO 7093-1 8 A4	SCHEIBE		
44	420000414	10	WASHER ISO 7089 6 A4	SCHEIBE		
45	406527814	4	HEX SCREW ISO 4017 M10X40 A4-70	SECHSKANTSCHRAUBE		
46	10540492	10	HEX NUT ISO 10511 M6 A4	SECHSKANTMUTTER		
47	10584123	1	HOLDER	HALTER		
48	10584124	1	HOLDER	HALTER		
49	10584210	1	HOLDER CPL	HALTER KPL		
50	10584105	1	GRATING	GITTERROST		
51	10583642	1	SHEET	PLATTE		
52	10349263	24	DISTANCE WASHER RD30X1 ALU	DISTANZSCHEIBE		
53	11244498	1	ANGLE	WINKEL		
54	406512014	31	HEX SCREW ISO 4017 M10X45 A4-70	SECHSKANTSCHRAUBE		
55	420001114	40	WASHER ISO 7089 10 A4	SCHEIBE		
56	958478414	2	BRACKET	BUEGEL		
57	411515014	7	HEX NUT ISO 4032 M8 A4-70	SECHSKANTMUTTER		
58	413003508	4	CAGE NUT M10-R-140-47	KAEFIGMUTTER		
59	890035314	21	T-NUT M10X12	T-NUTENSTEIN		
60	10098157	11	DISH	TELLER		
61	485550114	5	CAGE NUT M8-RR-123-47	KAEFIGMUTTER		
62	402600114	1	RING BOLT DIN 580 M8 C15E;EN 10084	RINGSCHRAUBE		
63	11225402	2	GROMMET	DURCHFUEHRUNGSTUELLE		
64	591645108	1	BLANKING PLUG	VERSCHLUSSSTOPFEN		
65	779014014	2	BLANKING PLUG	VERSCHLUSSSTOPFEN		

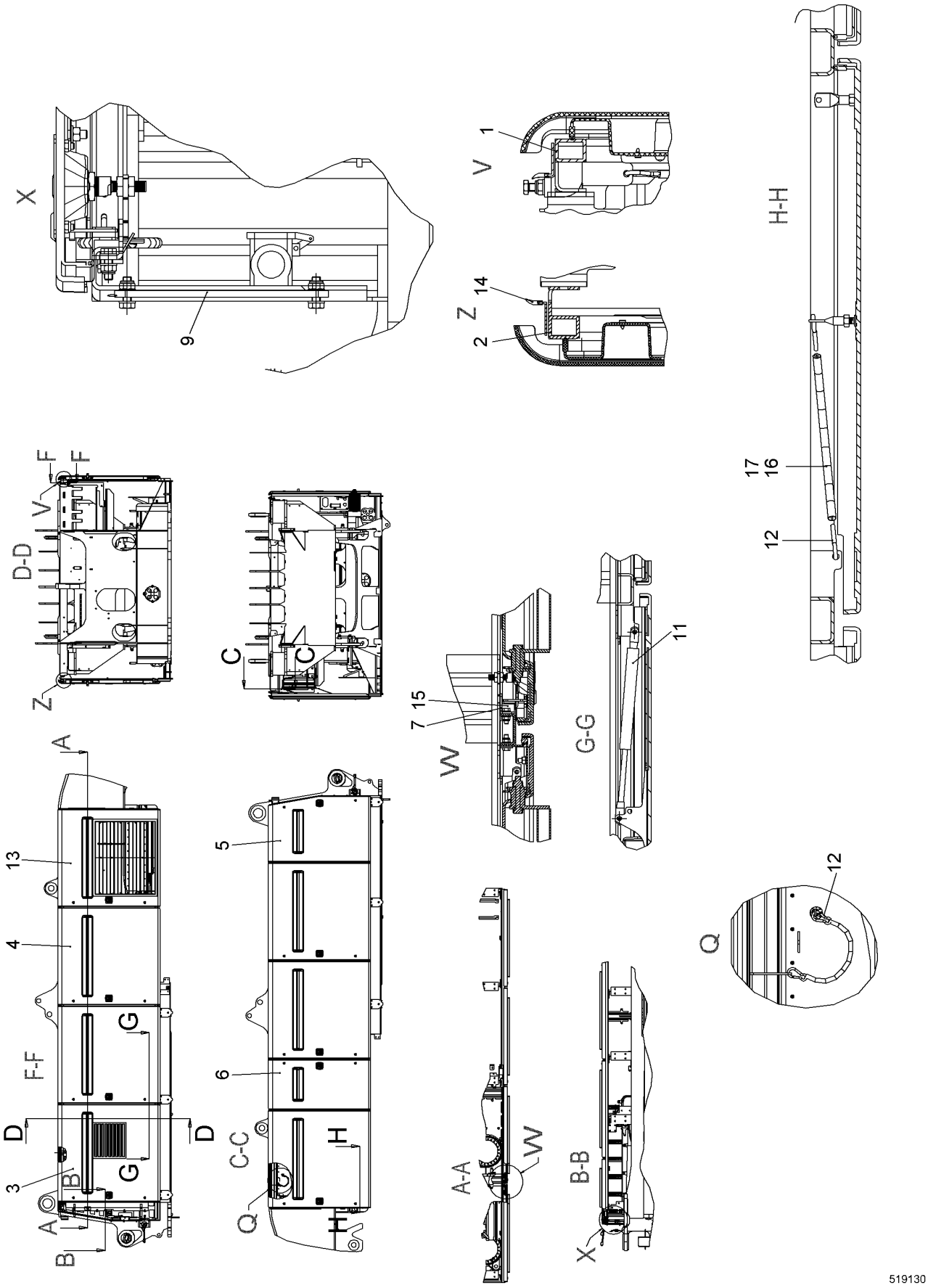
X
9
V
1
Z
14
2
H-H
17
16
12
D-D
F
F
V
Z
C
C
7
15
W
G-G
11
A
13
4
F-F
G
D
D
3
B
G
A
B
5
6
C-C
H
Q
H
A-A
W
B-B
X
Q
12
519130

Pos.	Item	Quantity	Description	Bezeichnung	Serie	K
1	10566842	1	FRAME	RAHMEN		
2	11244092	1	FRAME	RAHMEN		
3	10578835	1	DOOR ⇨ ❑ 320	TUER		
4	10578976	5	DOOR ⇨ ❑ 322	TUER		
5	10579400	1	DOOR ⇨ ❑ 324	TUER		
6	10566237	1	DOOR ⇨ ❑ 326	TUER		
7	10351547	7	WP	WP		
8	10351548	1	WP	WP		
9	10020512	1	BULKHEAD PLATE	SCHOTTPLATTE		
11	592323514	7	GAS SPRING	GASFEDER		
12	744011114	5	SNAP HOOK	KARABINERHAKEN		
13	10565808	1	DOOR ⇨ ❑ 327	TUER		

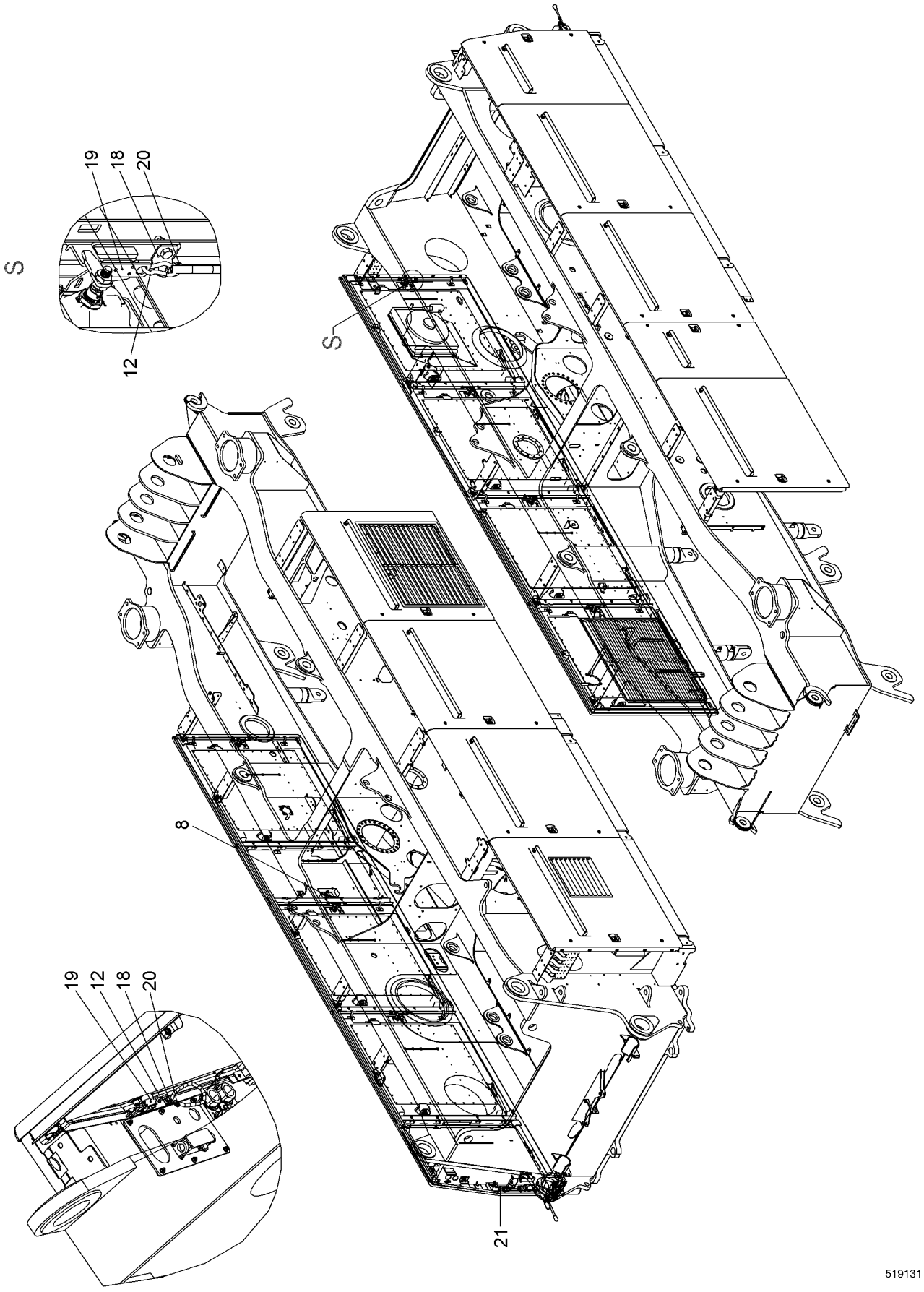
19
18
20
S
12
S
8
19
12
18
20
21
519131

Pos.	Item	Quantity	Description	Bezeichnung	Serie	K
14	262105314	9	FLEXIBLE EDGE PROTECTOR	KANTENSCHUTZ FLEXIBEL		
15	790549214	9	DOOR WEDGE	TUERKEIL		
16	740000801	2.3	KNOTTED-LINK CHAIN	KNOTENKETTE		
17	603000408	2.3	INSULATING HOSE	ISOLIERSCHLAUCH		
18	10574364	2	ANGLE	WINKEL		
19	10574357	2	PLATE	BLECH		
20	704214114	2	KEY RING RD 25	SCHLUESSELRING		
21	10581590	1	PLATE	BLECH		

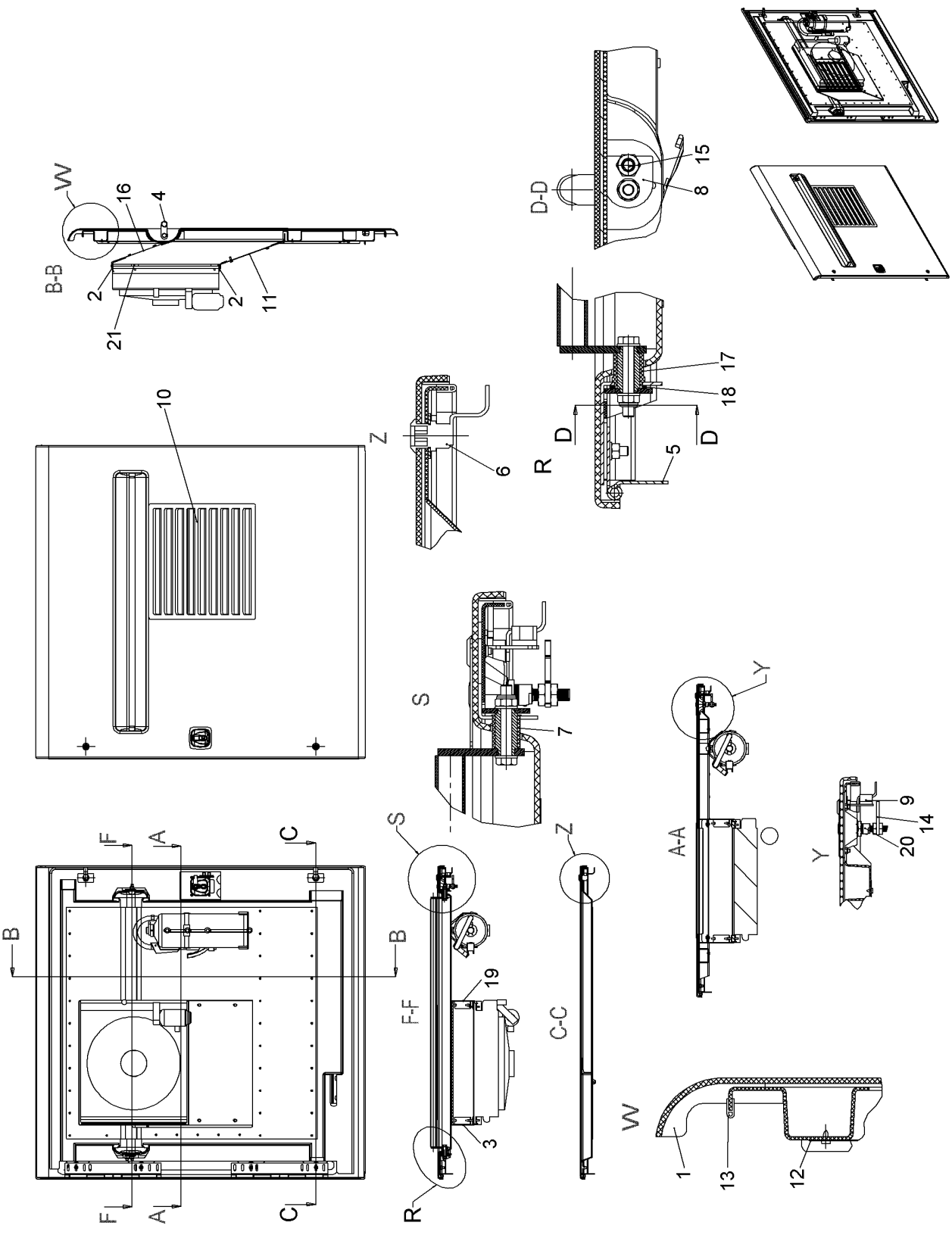

24.5.2017 519779 LIEBHERR	**138376_ETK_001** **DOOR** **TUER**	❑ 320 (1/2) **10 57 883 5**

Pos.	Item	Quantity	Description	Bezeichnung	Serie	K
1	10578836	1	DOOR	TUER		
2	262105314	1.1	FLEXIBLE EDGE PROTECTOR	KANTENSCHUTZ FLEXIBEL		
3	10223447	1	WP	WP		
4	10020487	1	GRIP	GRIFF		
5	385204714	2	HINGE	SCHARNIER		
6	10020161	2	ROTATING BAR CPL	DREHRIEGEL KPL		
7	797029114	1	BUSHING 20X24X30 POM;DIN EN ISO 9988	BUCHSE		
8	990443514	2	LIMIT STOP	ANSCHLAG		
9	790549314	1	DOOR WEDGE STOP	TUERKEIL PUFFER		
10	10223362	1	FAN COVER	LUEFTERABDECKUNG		
11	10223448	1	WP	WP		
12	10578841	1	PERFORATED PLATE	LOCHBLECH		
13	11918670	4	SEALING PROFILE	DICHTUNGSPROFIL		
14	10351784	1	LOCKING BAR	RIEGEL		
15	790550914	1	THRUST PIECE M12X26 X8CRNIS18-9;EN 1008	DRUCKSTUECK		
16	10223449	1	WP	WP		
17	958471514	1	BUSHING 20X24.9X31.9 POM;DIN EN ISO 9988	BUCHSE		
18	958471614	1	WASHER 25.2/32X3 POM	SCHEIBE		
19	10223446	1	WP	WP		
20	10353879	1	DOOR LOCK	TUERSCHLOSS		
21	726902614	4	RUBBER MOUNT	LAGER GUMMI		

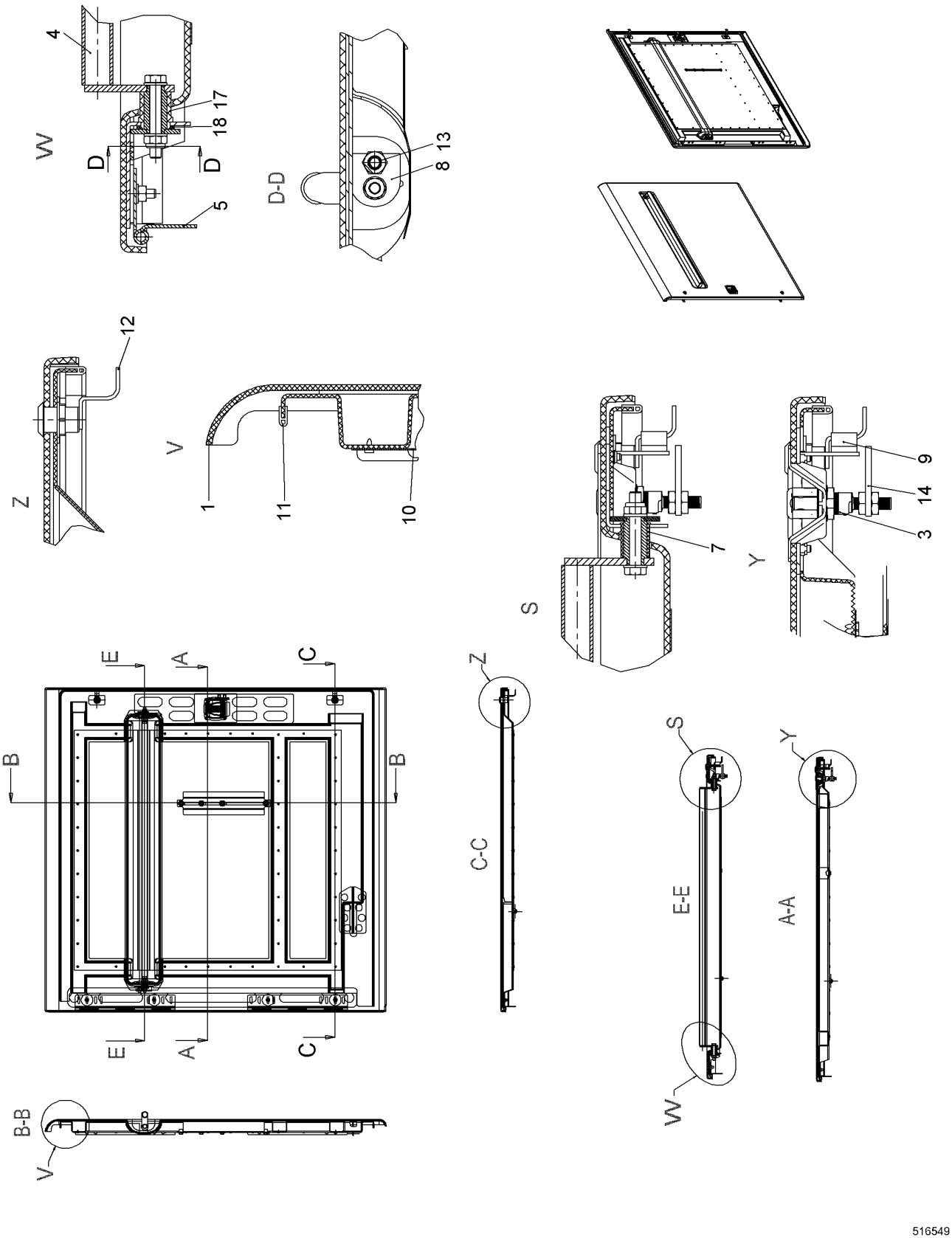
4
W
D
D
18 17
5
D-D
8 13
12
Z
V
1
11
10
S
7
Y
9
14
3
E
A
C
B
B
E
A
C
B-B
V
Z
C-C
S
E-E
W
Y
A-A
516549

Pos.	Item	Quantity	Description	Bezeichnung	Serie	K
1	10578972	1	DOOR	TUER		
3	10353879	1	DOOR LOCK	TUERSCHLOSS		
4	10020487	1	GRIP	GRIFF		
5	385204714	2	HINGE	SCHARNIER		
7	797029114	1	BUSHING 20X24X30 POM;DIN EN ISO 9988	BUCHSE		
8	990443514	2	LIMIT STOP	ANSCHLAG		
9	790549314	1	DOOR WEDGE STOP	TUERKEIL PUFFER		
10	10578971	1	PERFORATED PLATE	LOCHBLECH		
11	11918670	4.1	SEALING PROFILE	DICHTUNGSPROFIL		
12	10020161	2	ROTATING BAR CPL	DREHRIEGEL KPL		
13	790550914	1	THRUST PIECE M12X26 X8CRNIS18-9;EN 1008	DRUCKSTUECK		
14	10351784	1	LOCKING BAR	RIEGEL		
17	958471514	1	BUSHING 20X24.9X31.9 POM;DIN EN ISO 9988	BUCHSE		
18	958471614	1	WASHER 25.2/32X3 POM	SCHEIBE		

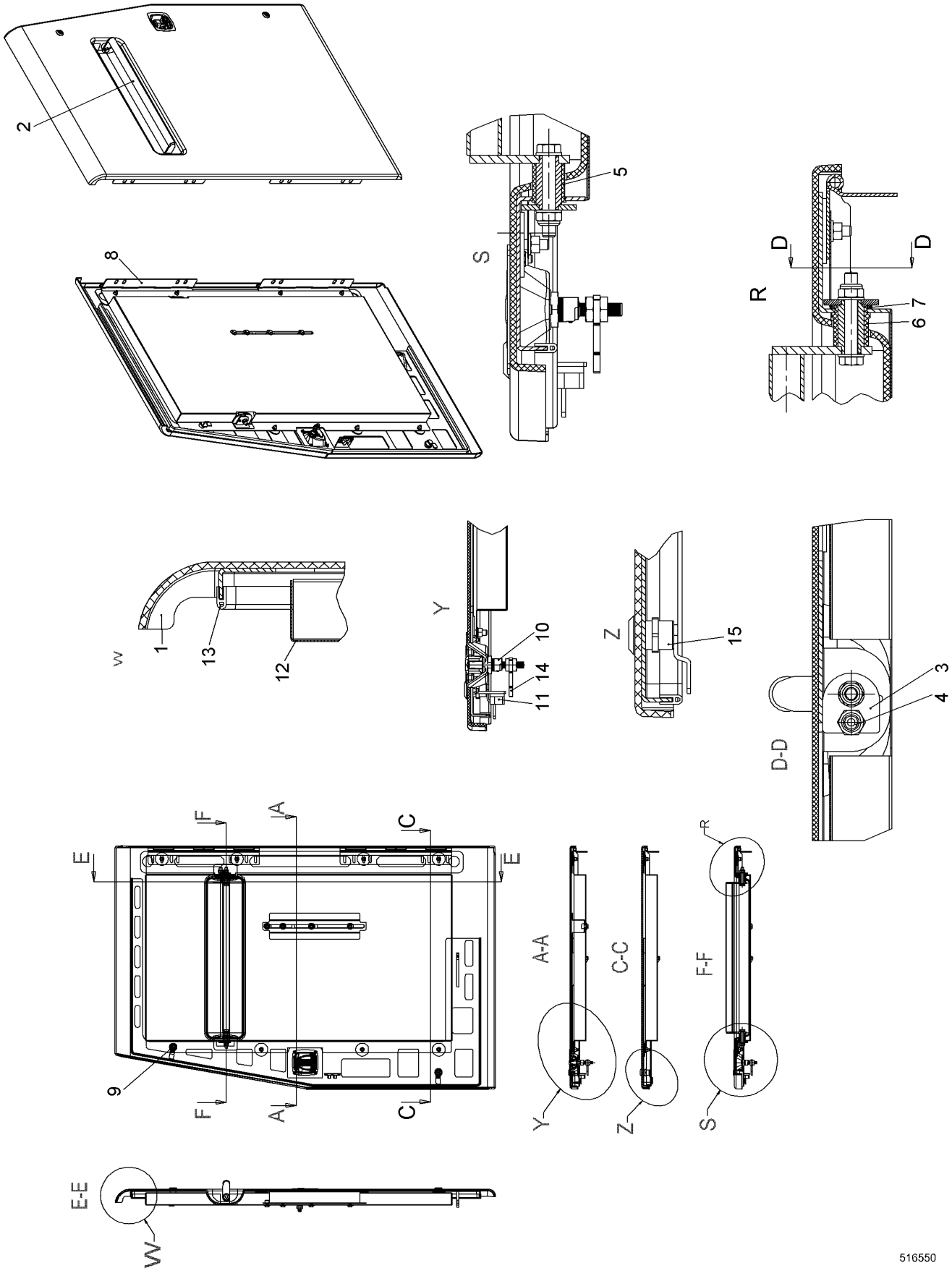

24.5.2017 516550 LIEBHERR	**138376_ETK_001** **DOOR** **TUER**	324 (1/2) **10 57 940 0**

Pos.	Item	Quantity	Description	Bezeichnung	Serie	K
1	10579397	1	DOOR	TUER		
2	10579454	1	GRIP	GRIFF		
3	990443514	2	LIMIT STOP	ANSCHLAG		
4	790550914	1	THRUST PIECE M12X26 X8CRNIS18-9;EN 1008	DRUCKSTUECK		
5	797029114	1	BUSHING 20X24X30 POM;DIN EN ISO 9988	BUCHSE		
6	958471514	1	BUSHING 20X24.9X31.9 POM;DIN EN ISO 9988	BUCHSE		
7	958471614	1	WASHER 25.2/32X3 POM	SCHEIBE		
8	385204714	2	HINGE	SCHARNIER		
9	10020161	1	ROTATING BAR CPL	DREHRIEGEL KPL		
10	10353879	1	DOOR LOCK	TUERSCHLOSS		
11	790549314	1	DOOR WEDGE STOP	TUERKEIL PUFFER		
12	10579423	1	PERFORATED PLATE	LOCHBLECH		
13	11918670	2.6	SEALING PROFILE	DICHTUNGSPROFIL		
14	10351784	1	LOCKING BAR	RIEGEL		
15	10581486	1	SASH LOCK	VORREIBER		

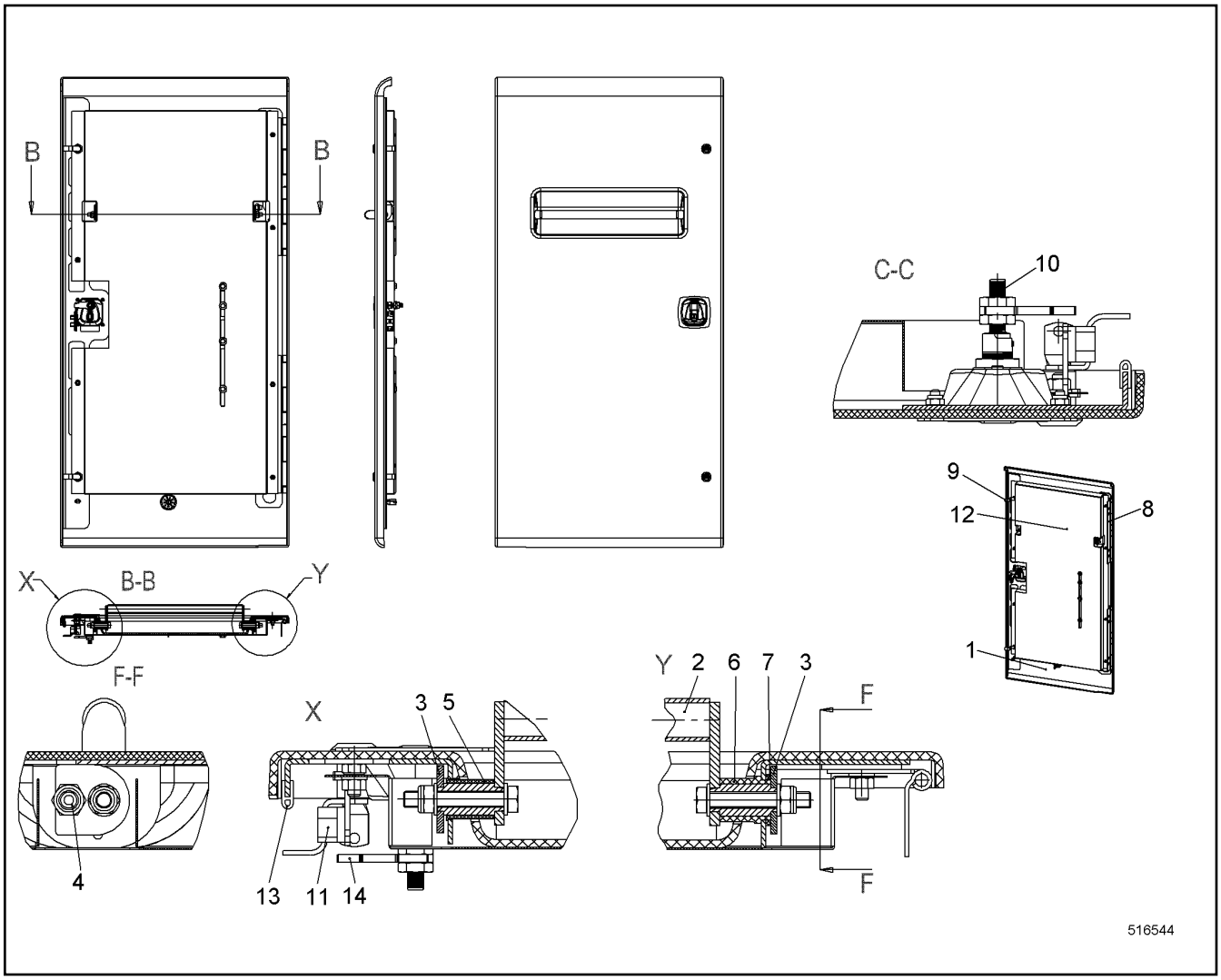

Pos.	Item	Quantity	Description	Bezeichnung	Serie	K
1	10566238	1	DOOR	TUER		
2	10579145	1	GRIP	GRIFF		
3	990443514	2	LIMIT STOP	ANSCHLAG		
4	790550914	1	THRUST PIECE M12X26 X8CRNIS18-9;EN 1008	DRUCKSTUECK		
5	797029114	1	BUSHING 20X24X30 POM;DIN EN ISO 9988	BUCHSE		
6	958471514	1	BUSHING 20X24.9X31.9 POM;DIN EN ISO 9988	BUCHSE		
7	958471614	1	WASHER 25.2/32X3 POM	SCHEIBE		
8	385204714	2	HINGE	SCHARNIER		
9	10020161	2	ROTATING BAR CPL	DREHRIEGEL KPL		
10	10353879	1	DOOR LOCK	TUERSCHLOSS		
11	790549314	1	DOOR WEDGE STOP	TUERKEIL PUFFER		
12	10566239	1	PERFORATED PLATE	LOCHBLECH		
13	11918670	1.35	SEALING PROFILE	DICHTUNGSPROFIL		
14	10351784	1	LOCKING BAR	RIEGEL		

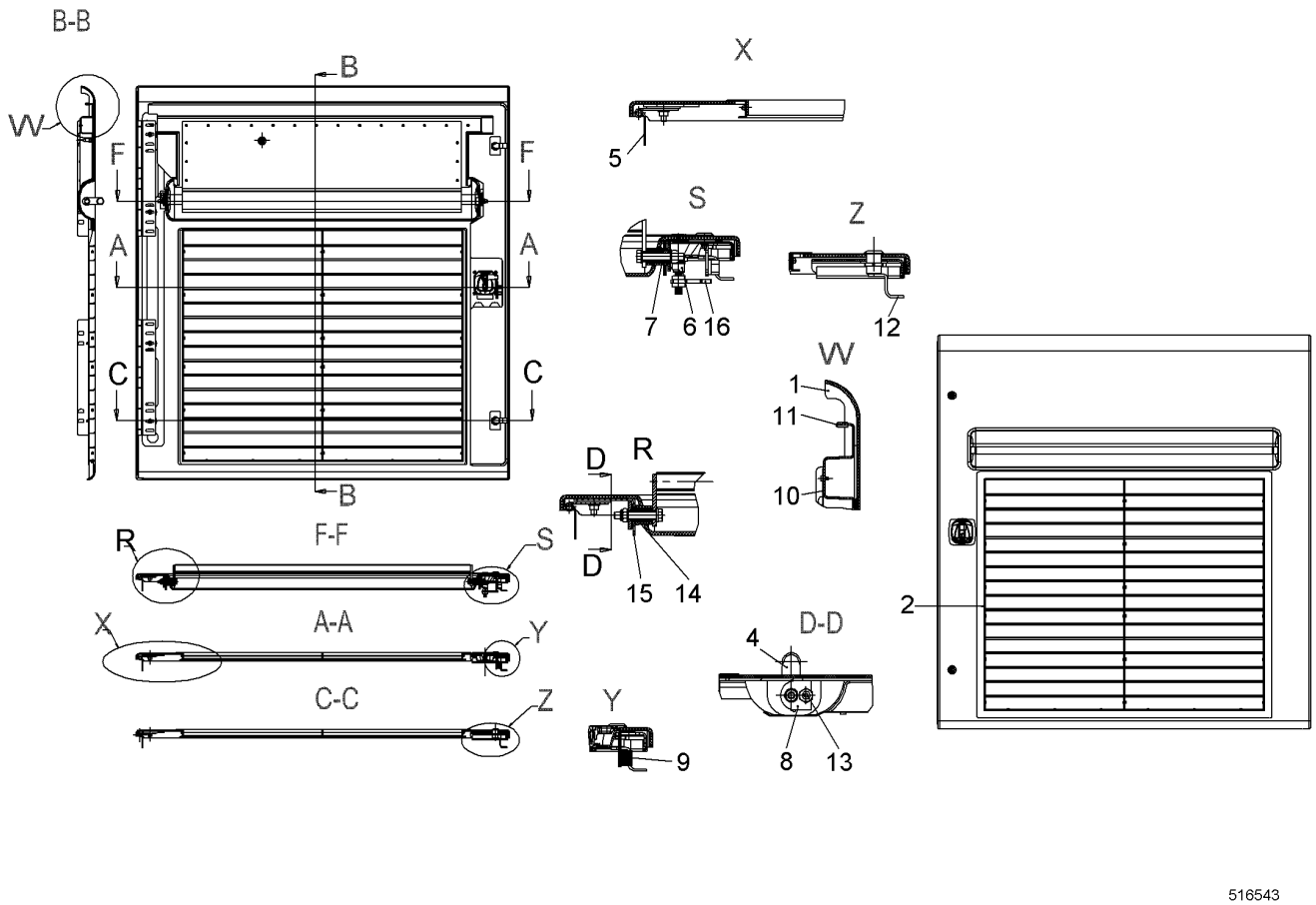

Pos.	Item	Quantity	Description	Bezeichnung	Serie	K
1	10565777	1	DOOR	TUER		
2	10565889	1	FAN COVER	LUEFTERABDECKUNG		
4	10020487	1	GRIP	GRIFF		
5	385204714	2	HINGE	SCHARNIER		
6	10353879	1	DOOR LOCK	TUERSCHLOSS		
7	797029114	1	BUSHING 20X24X30 POM;DIN EN ISO 9988	BUCHSE		
8	990443514	2	LIMIT STOP	ANSCHLAG		
9	790549314	1	DOOR WEDGE STOP	TUERKEIL PUFFER		
10	10565879	1	PERFORATED PLATE	LOCHBLECH		
11	11918670	2.8	SEALING PROFILE	DICHTUNGSPROFIL		
12	10020161	2	ROTATING BAR CPL	DREHRIEGEL KPL		
13	790550914	1	THRUST PIECE M12X26 X8CRNIS18-9;EN 1008	DRUCKSTUECK		
14	958471514	1	BUSHING 20X24.9X31.9 POM;DIN EN ISO 9988	BUCHSE		
15	958471614	1	WASHER 25.2/32X3 POM	SCHEIBE		
16	10351784	1	LOCKING BAR	RIEGEL		

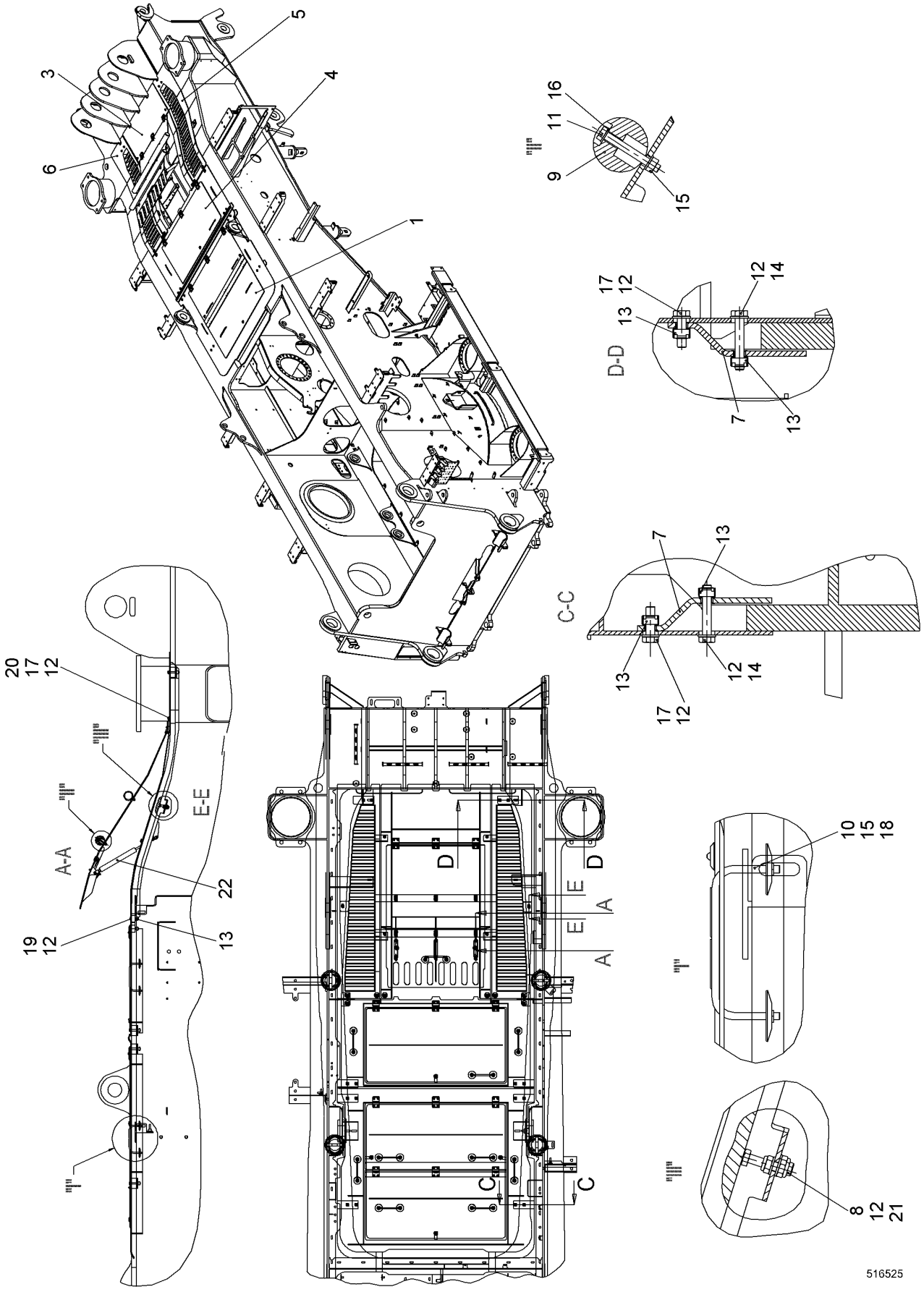

24.5.2017 516525 LIEBHERR	**138376_ETK_001** **MOTOR COWLING** **MOTORABDECKUNG**	❑ 328 (1/2) **10 54 591 0**

Pos.	Item	Quantity	Description	Bezeichnung	Serie	K
1	10563099	1	ROOF	DACH		
3	10545968	1	ROOF	DACH		
4	10545969	1	ROOF	DACH		
5	10545970	1	ROOF	DACH		
6	10546335	1	ROOF	DACH		
7	10349206	8	BRACKET	BUEGEL		
8	10540494	4	HEX NUT ISO 10511 M10 A4	SECHSKANTMUTTER		
9	10546407	2	STRIP	LEISTE		
10	958478414	10	BRACKET	BUEGEL		
11	10331507	6	HEX SCREW ISO 4017 M8X65 A4-70	SECHSKANTSCHRAUBE		
12	420001114	36	WASHER ISO 7089 10 A4	SCHEIBE		
13	413004408	24	CAGE NUT M10-R-140-62	KAEFIGMUTTER		
14	10539959	8	HEX SCREW ISO 4017 M10X60 A4-70	SECHSKANTSCHRAUBE		
15	411515014	26	HEX NUT ISO 4032 M8 A4-70	SECHSKANTMUTTER		
16	420001014	12	WASHER ISO 7089 8 A4	SCHEIBE		
17	406509314	12	HEX SCREW ISO 4017 M10X35 A4-70	SECHSKANTSCHRAUBE		
18	10098157	20	DISH	TELLER		
19	406512014	8	HEX SCREW ISO 4017 M10X45 A4-70	SECHSKANTSCHRAUBE		
20	411514614	4	HEX NUT ISO 4032 M10 A4-70	SECHSKANTMUTTER		
21	406518614	2	HEX SCREW ISO 4017 M10X50 A4-70	SECHSKANTSCHRAUBE		
22	592323514	3	GAS SPRING	GASFEDER		

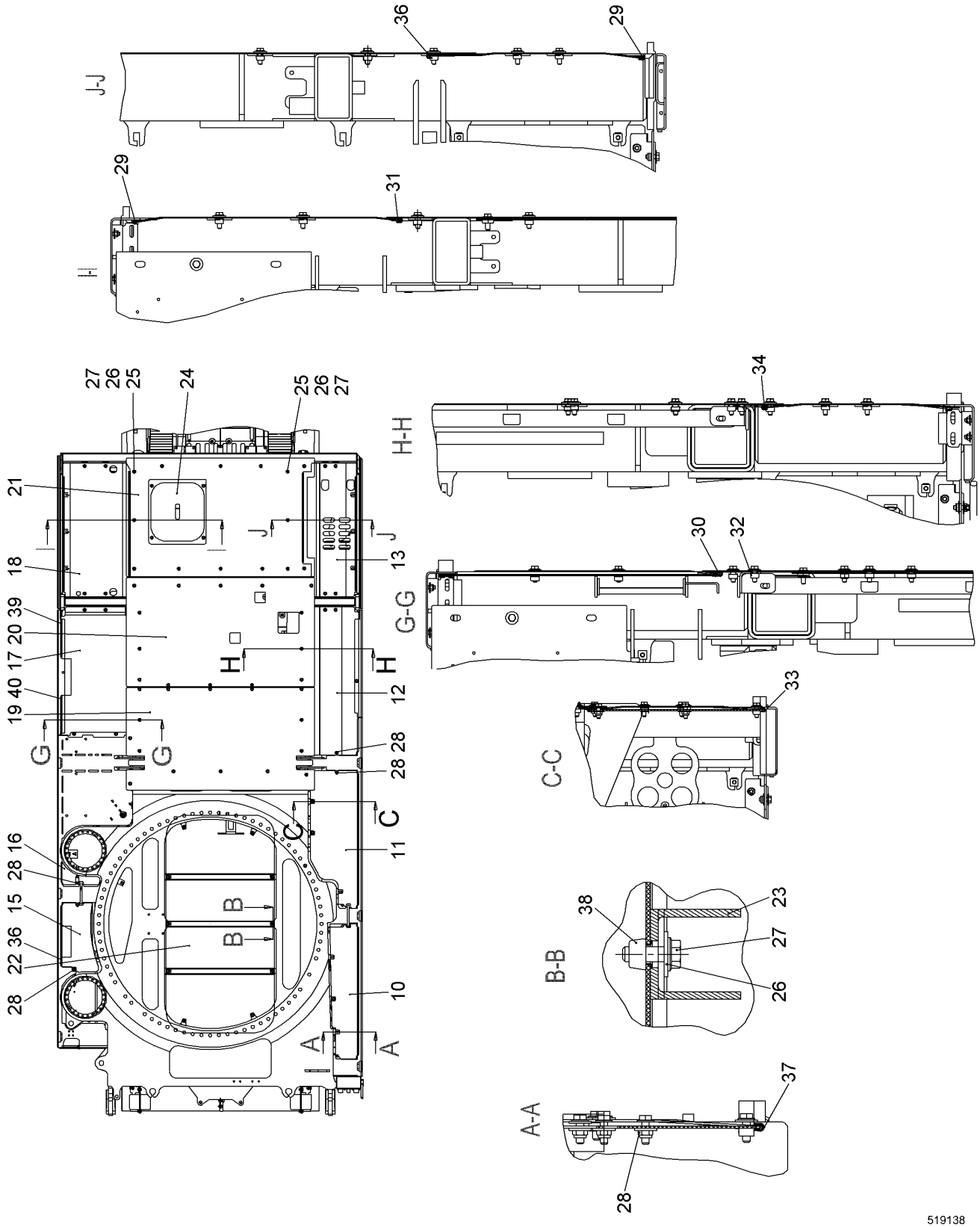

24.5.2017 519138	**138376_ETK_001**	330 (1/2)
LIEBHERR	**COVER UNDERSIDE** **ABDECKUNG UNTERSEITE**	**11 24 922 2**

Pos.	Item	Quantity	Description	Bezeichnung	Serie	K
10	10560687	1	SHEET	PLATTE		
11	10560691	1	SHEET	PLATTE		
12	10560692	1	SHEET	PLATTE		
13	11249223	1	SHEET	PLATTE		
15	10583559	1	SHEET	PLATTE		
16	10560690	1	SHEET	PLATTE		
17	10560688	1	SHEET	PLATTE		
18	11249224	1	SHEET	PLATTE		
19	10583611	1	SHEET	PLATTE		
20	10583612	1	SHEET	PLATTE		
21	11249225	1	SHEET	PLATTE		
22	10098789	1	SHEET	PLATTE		
23	11225259	3	U-PROFILE	U-PROFIL		
24	11249678	1	SHEET	PLATTE		
25	485550014	2	CAGE NUT M10-RR-140-62	KAEFIGMUTTER		
26	10540511	89	WASHER ISO 7093-1 10 A4	SCHEIBE		
27	406550714	84	HEX SCREW EN 1665 M10X30 A2-70	SECHSKANTSCHRAUBE		
28	10540494	12	HEX NUT ISO 10511 M10 A4	SECHSKANTMUTTER		
29	226016702	2.18	EDGE PROTECTION METER WARE	KANTENSCHUTZ METERWARE		
30	226016702	1.11	EDGE PROTECTION METER WARE	KANTENSCHUTZ METERWARE		
31	226016702	1.19	EDGE PROTECTION METER WARE	KANTENSCHUTZ METERWARE		
32	485549914	53	CAGE NUT M10-RR-140-47	KAEFIGMUTTER		
33	226016702	1.24	EDGE PROTECTION METER WARE	KANTENSCHUTZ METERWARE		
34	226016702	1.29	EDGE PROTECTION METER WARE	KANTENSCHUTZ METERWARE		
35	226016702	0.57	EDGE PROTECTION METER WARE	KANTENSCHUTZ METERWARE		
36	226016702	0.85	EDGE PROTECTION METER WARE	KANTENSCHUTZ METERWARE		
37	226016702	1.2	EDGE PROTECTION METER WARE	KANTENSCHUTZ METERWARE		
38	413003308	18	CAGE NUT M10-R-140-32	KAEFIGMUTTER		
39	226016702	0.36	EDGE PROTECTION METER WARE	KANTENSCHUTZ METERWARE		
40	226016702	0.35	EDGE PROTECTION METER WARE	KANTENSCHUTZ METERWARE		

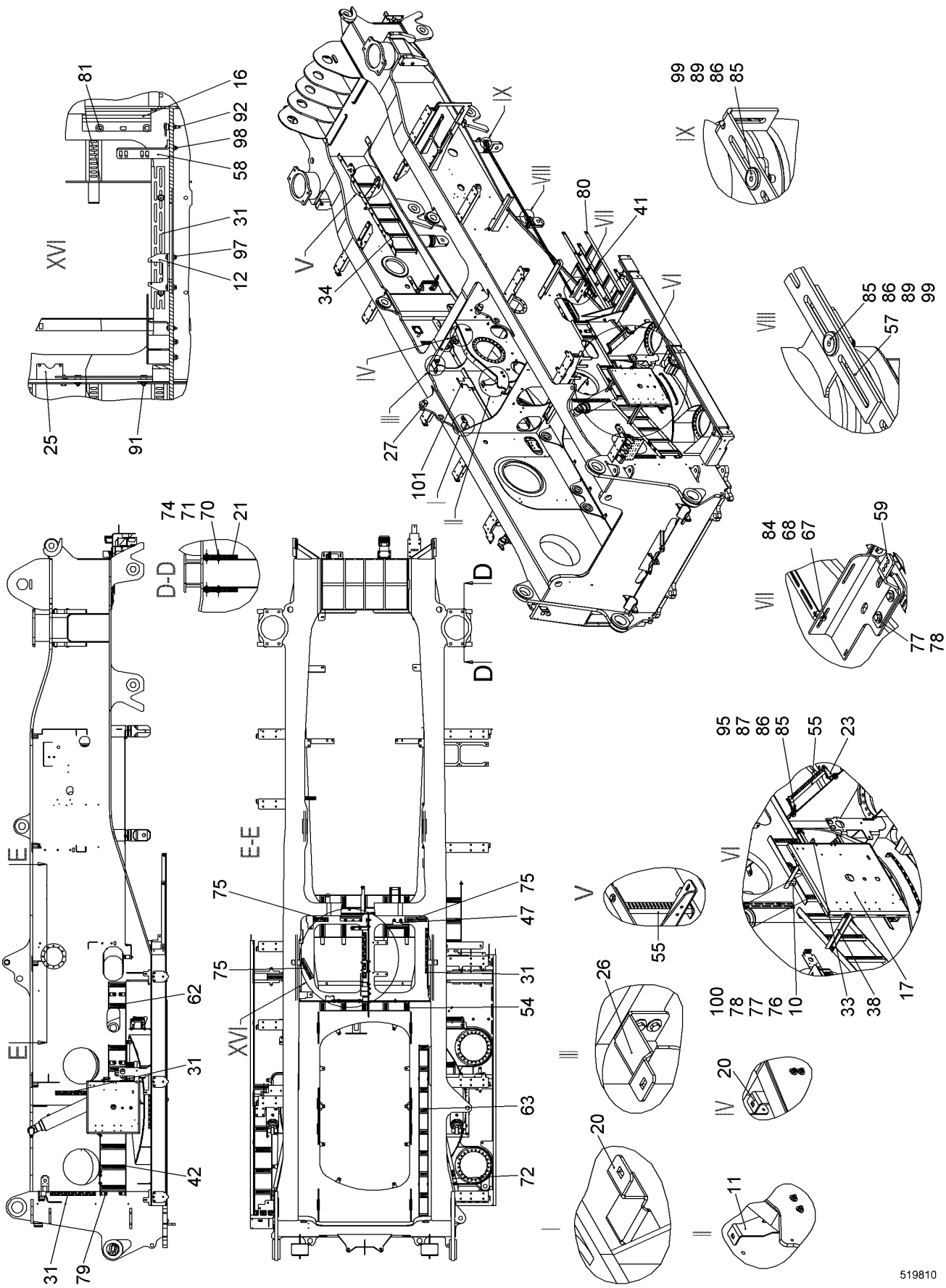
519810

Pos.	Item	Quantity	Description	Bezeichnung	Serie	K
10	956009714	1	INTERMEDIATE PART	ZWISCHENSTUECK		
11	10575981	1	BRACKET ST.CONST.	BUEGEL SCHWK		
12	954598503	2	VALVE HOLDER	VENTILHALTER		
13	10575967	1	BRACKET	BUEGEL		
14	10575984	1	BRACKET ST.CONST.	BUEGEL SCHWK		
15	10575968	1	BRACKET	BUEGEL		
16	949401114	1	HOSE HOLDER ST.CONST. CPL	SCHLAUCHHALTER SCHWK KPL		
17	10575966	1	VALVE PLATE	VENTILPLATTE		
18	10575969	1	BRACKET	BUEGEL		
19	10576104	1	BRACKET ST.CONST.	BUEGEL SCHWK		
20	10575985	2	BRACKET	BUEGEL		
21	10349434	4	STRIP	LEISTE		
22	11247375	1	BRACKET	BUEGEL		
23	10575970	8	BRACKET	BUEGEL		
24	949758314	1	BRACKET	BUEGEL		
25	967313703	1	BRACKET	BUEGEL		
26	10579757	1	BRACKET	BUEGEL		
27	11947719	2	PIN	BOLZEN		
28	11247029	1	SLOTTED STRIP	SCHLITZBAND		
29	11247791	1	BRACKET	BUEGEL		
30	10575980	3	HOLDER	HALTER		
31	11247792	9	SLOTTED STRIP	SCHLITZBAND		
32	11247799	2	SLOTTED STRIP	SCHLITZBAND		
33	11247808	1	BRACKET	BUEGEL		
35	11265945	1	BRACKET	BUEGEL		
37	10575971	3	BRACKET	BUEGEL		
38	11247011	1	BRACKET	BUEGEL		
39	10445651	2	BRACKET	BUEGEL		
42	11246919	1	CABLE LADDER ST.CONST.	KABELLEITER SCHWK		
43	10592619	1	BRACKET	BUEGEL		
44	10592621	1	BRACKET	BUEGEL		
46	10599571	1	WP	WP		
47	10599614	1	C-RAIL ST.CONST.	C-SCHIENE SCHWK		
48	11247158	1	CABLE LADDER ST.CONST.	KABELLEITER SCHWK		
49	10599854	1	WP	WP		
50	11247207	1	CABLE LADDER ST.CONST.	KABELLEITER SCHWK		
52	11244040	2	SLOTTED STRIP	SCHLITZBAND		
57	11234375	2	SLOTTED STRIP	SCHLITZBAND		
58	11234405	1	BRACKET	BUEGEL		
59	11234413	1	BRACKET	BUEGEL		

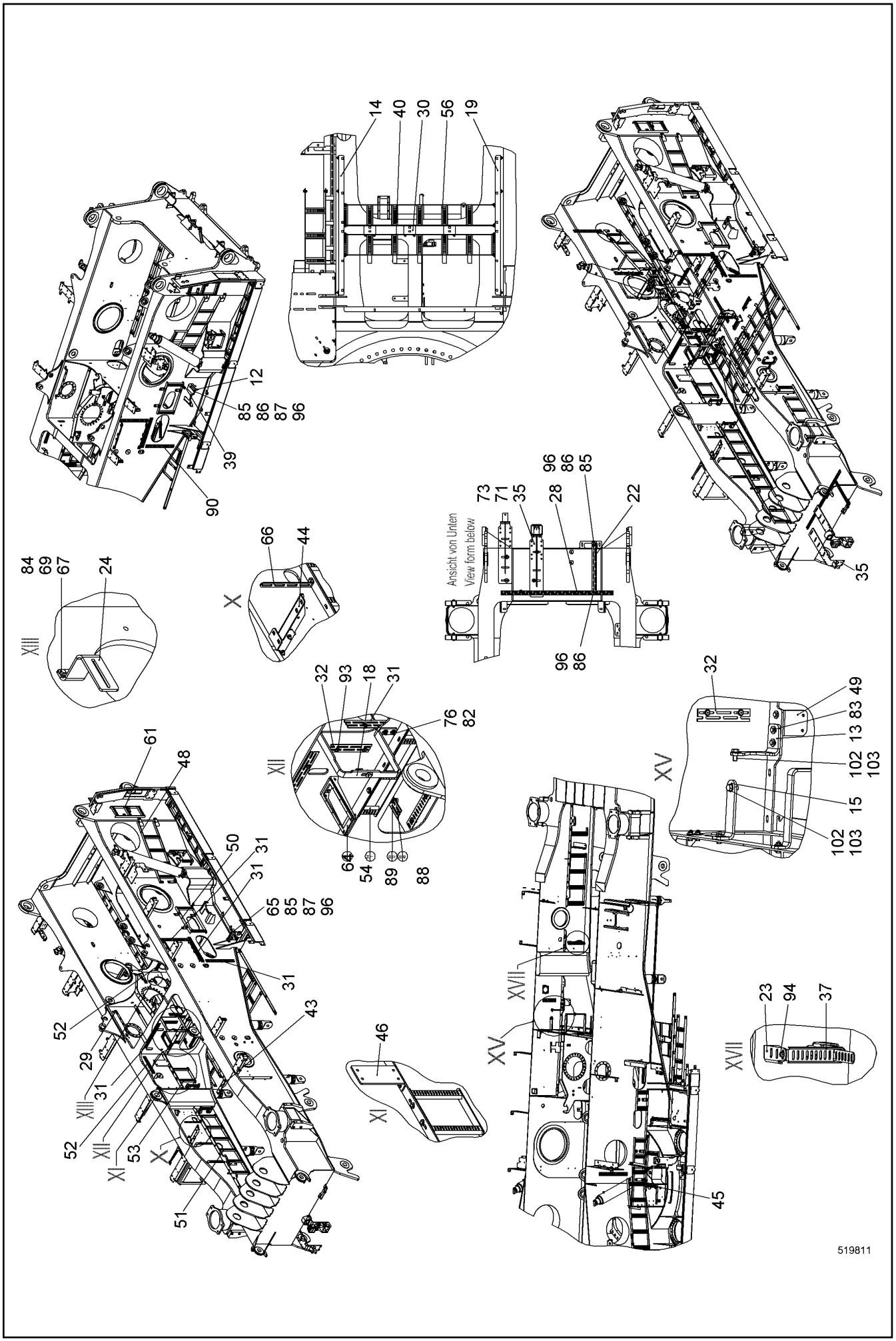
14
40
30
56
19
12
85
86
87
96
39
90
35
96
86
85
73
71
35
28
22
Ansicht von Unten
View form below
96
86
84
69
67
24
XIII
66
44
X
32
93
18
31
76
82
XII
64
54
89
88
61
48
50
31
31
65
85
87
96
31
52
43
29
31
XIII
52
XII
XI
53
X
51
46
XI
XV
XVII
45
32
49
83
13
102
103
15
102
103
XV
23
94
37
XVIII
519811

Pos.	Item	Quantity	Description	Bezeichnung	Serie	K
61	11247023	1	CABLE LADDER ST.CONST.	KABELLEITER SCHWK		
62	11247131	1	CABLE LADDER ST.CONST.	KABELLEITER SCHWK		
64	954485303	1	CONSOLE	KONSOLE		
65	11265089	1	CABLE LADDER ST.CONST.	KABELLEITER SCHWK		
67	10540500	6	WASHER ISO 7093-1 6 A4	SCHEIBE		
68	406532614	1	HEX SCREW ISO 4017 M6X20 A4-70	SECHSKANTSCHRAUBE		
69	406551114	2	HEX SCREW ISO 4017 M6X35 A4-70	SECHSKANTSCHRAUBE		
70	10540495	8	HEX NUT ISO 10511 M12 A4	SECHSKANTMUTTER		
71	10540512	11	WASHER ISO 7093-1 12 A4	SCHEIBE		
72	11257849	1	BRACKET	BUEGEL		
73	406517314	3	HEX SCREW ISO 4017 M12X30 A4-70	SECHSKANTSCHRAUBE		
74	10538830	8	HEX SCREW ISO 4017 M12X80 A4-70	SECHSKANTSCHRAUBE		
75	11257851	3	BRACKET	BUEGEL		
76	10540494	83	HEX NUT ISO 10511 M10 A4	SECHSKANTMUTTER		
77	10540511	125	WASHER ISO 7093-1 10 A4	SCHEIBE		
78	420001114	53	WASHER ISO 7089 10 A4	SCHEIBE		
79	406511914	24	HEX SCREW ISO 4017 M10X25 A4-70	SECHSKANTSCHRAUBE		
80	406511614	46	HEX SCREW ISO 4017 M10X30 A4-70	SECHSKANTSCHRAUBE		
81	406509314	23	HEX SCREW ISO 4017 M10X35 A4-70	SECHSKANTSCHRAUBE		
82	406527814	8	HEX SCREW ISO 4017 M10X40 A4-70	SECHSKANTSCHRAUBE		
83	406512014	1	HEX SCREW ISO 4017 M10X45 A4-70	SECHSKANTSCHRAUBE		
84	10540492	3	HEX NUT ISO 10511 M6 A4	SECHSKANTMUTTER		
85	10540493	37	HEX NUT ISO 10511 M8 A4	SECHSKANTMUTTER		
86	10540510	34	WASHER ISO 7093-1 8 A4	SCHEIBE		
87	420001014	26	WASHER ISO 7089 8 A4	SCHEIBE		
88	421700508	48	WASHER DIN 7989 11 ST	SCHEIBE		
89	460022703	34	WASHER EN 14399-6 12 C45	SCHEIBE		
90	408606414	14	COUNTERSUNK SCREW DIN 7991 M8X25 A4-7	SENKSCHRAUBE		
91	408600808	2	COUNTERSUNK SCREW ISO 10642 M8X40 8.8	SENKSCHRAUBE		
92	4002655	10	COUNTERSUNK SCREW ISO 10642 M8X60 8.8	SENKSCHRAUBE		
93	10349756	6	COUNTERSUNK SCREW ISO 10642 M8X35 A4	SENKSCHRAUBE		
94	406518814	8	HEX SCREW ISO 4017 M8X20 A4-70	SECHSKANTSCHRAUBE		
95	406501414	2	HEX SCREW ISO 4017 M8X25 A4-70	SECHSKANTSCHRAUBE		
96	406501314	10	HEX SCREW ISO 4017 M8X30 A4-70	SECHSKANTSCHRAUBE		
97	406517614	2	HEX SCREW ISO 4017 M8X35 A4-70	SECHSKANTSCHRAUBE		
98	406532914	1	HEX SCREW ISO 4017 M8X40 A4-70	SECHSKANTSCHRAUBE		
99	408600708	2	COUNTERSUNK SCREW ISO 10642 M8X30 8.8	SENKSCHRAUBE		
100	10539293	1	HEX SCREW ISO 4017 M10X75 A4-70	SECHSKANTSCHRAUBE		
101	954229003	1	HOLDER	HALTER		
102	10544172	2	WASHER ISO 7089 16	SCHEIBE		
103	10539317	2	HEX SCREW ISO 4017 M16X35 10.9	SECHSKANTSCHRAUBE		

OHNE BILD
WITHOUT ILLUSTRATION
SANS PLANCHE
SIN FIG.
SEM ILUSTRAÇÃO
БЕЗ ИЗОБРАЖЕНИЯ

600000

Pos.	Item	Quantity	Description	Bezeichnung	Serie	K
280	11699714	1	CAR RADIO	AUTORADIO		

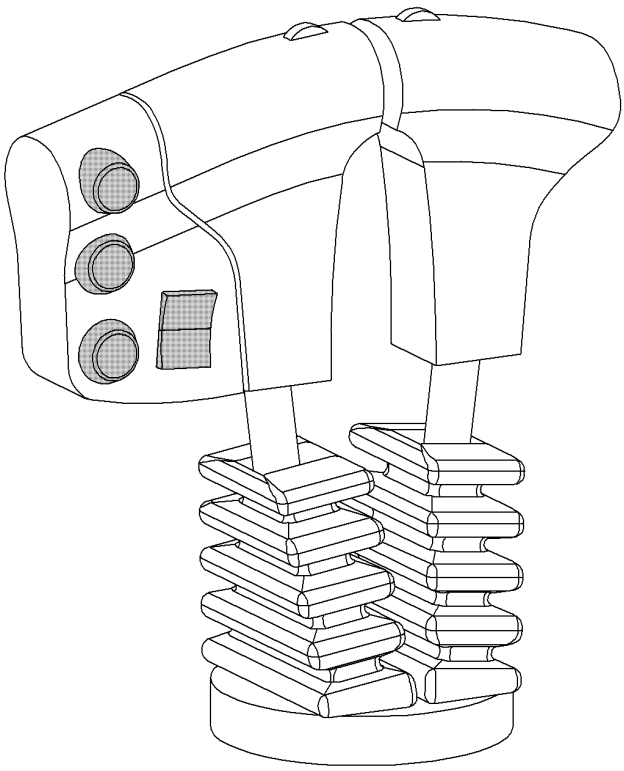

514839

Pos.	Item	Quantity	Description	Bezeichnung	Serie	K
10	11214820	1	MASTER SWITCH	MEISTERSCHALTER		

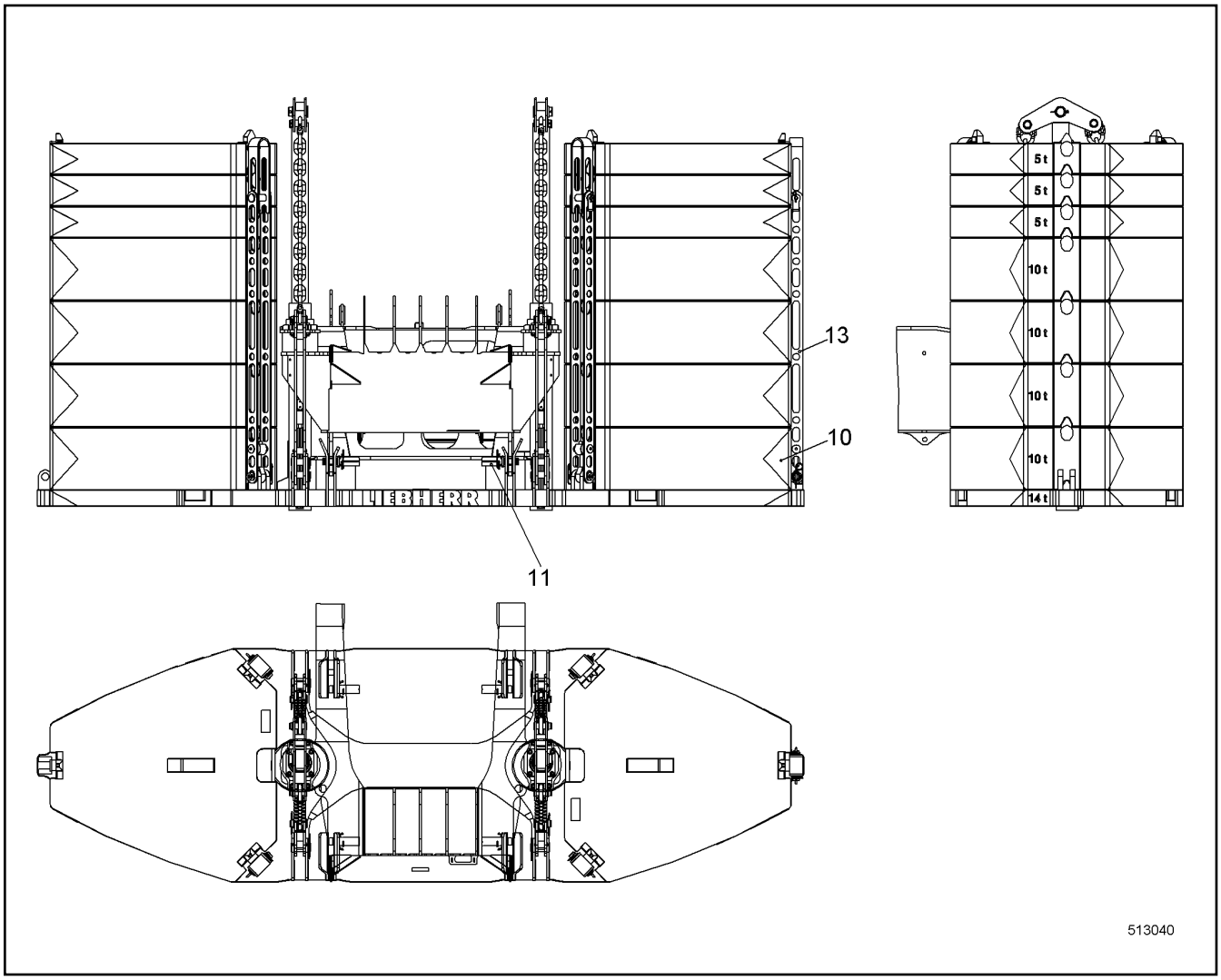

Pos.	Item	Quantity	Description	Bezeichnung	Serie	K
10	992757214	1	BASEPLATE CPL ⇨ ❑ 339	GRUNDPLATTE KPL		
11	10526560	1	MOUNTING PARTS ⇨ ❑ 340	MONTAGETEILE		
13	992980314	1	LASHING BALLAST ⇨ ❑ 341	VERZURRUNG BALLAST		

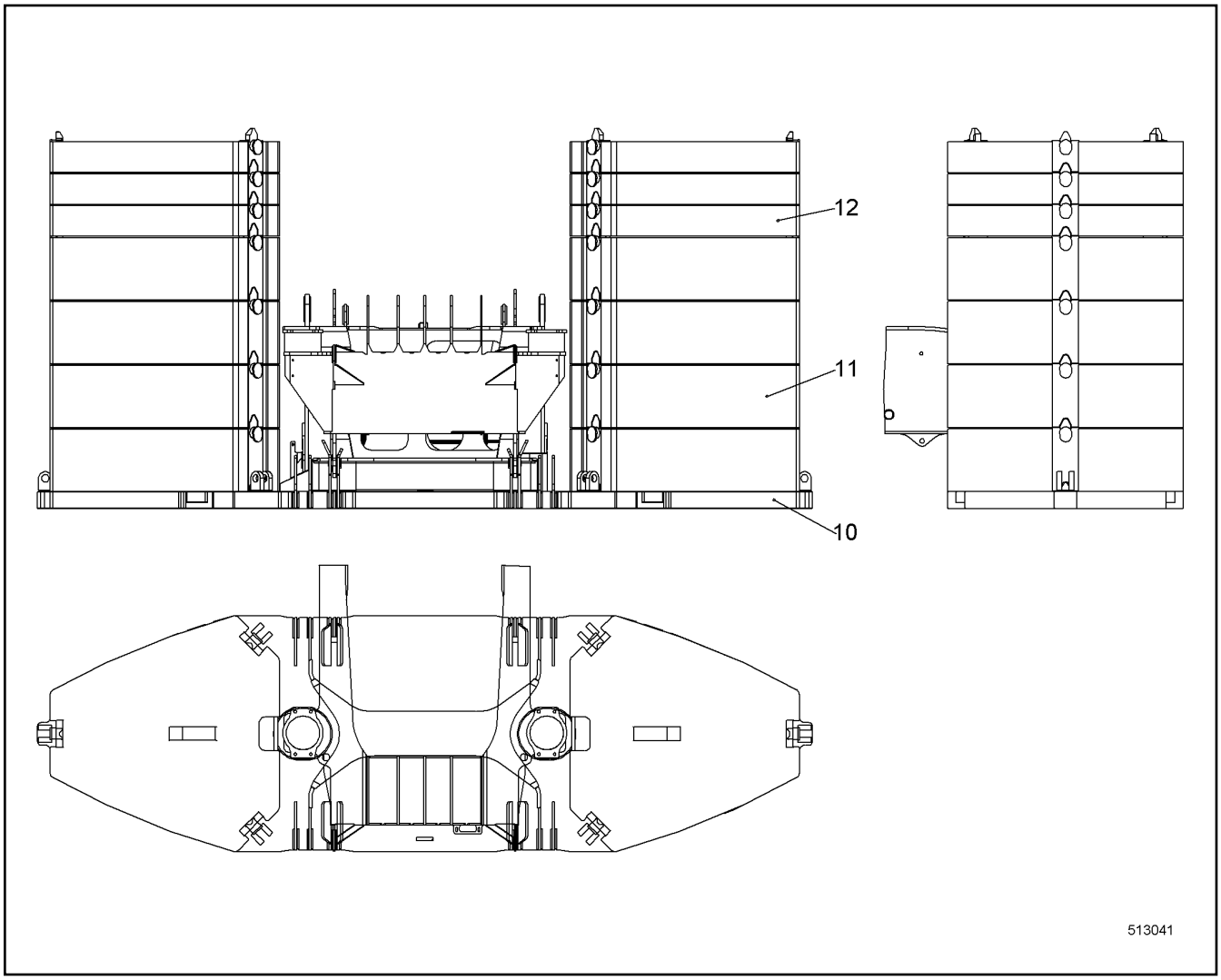

Pos.	Item	Quantity	Description	Bezeichnung	Serie	K
10	992741214	1	BASEPLATE ST.CONST.	GRUNDPLATTE SCHWK		
11	10349440	8	ADDITIONAL BALLAST	ZUSATZBALLAST		
12	10349439	6	ADDITIONAL BALLAST	ZUSATZBALLAST		

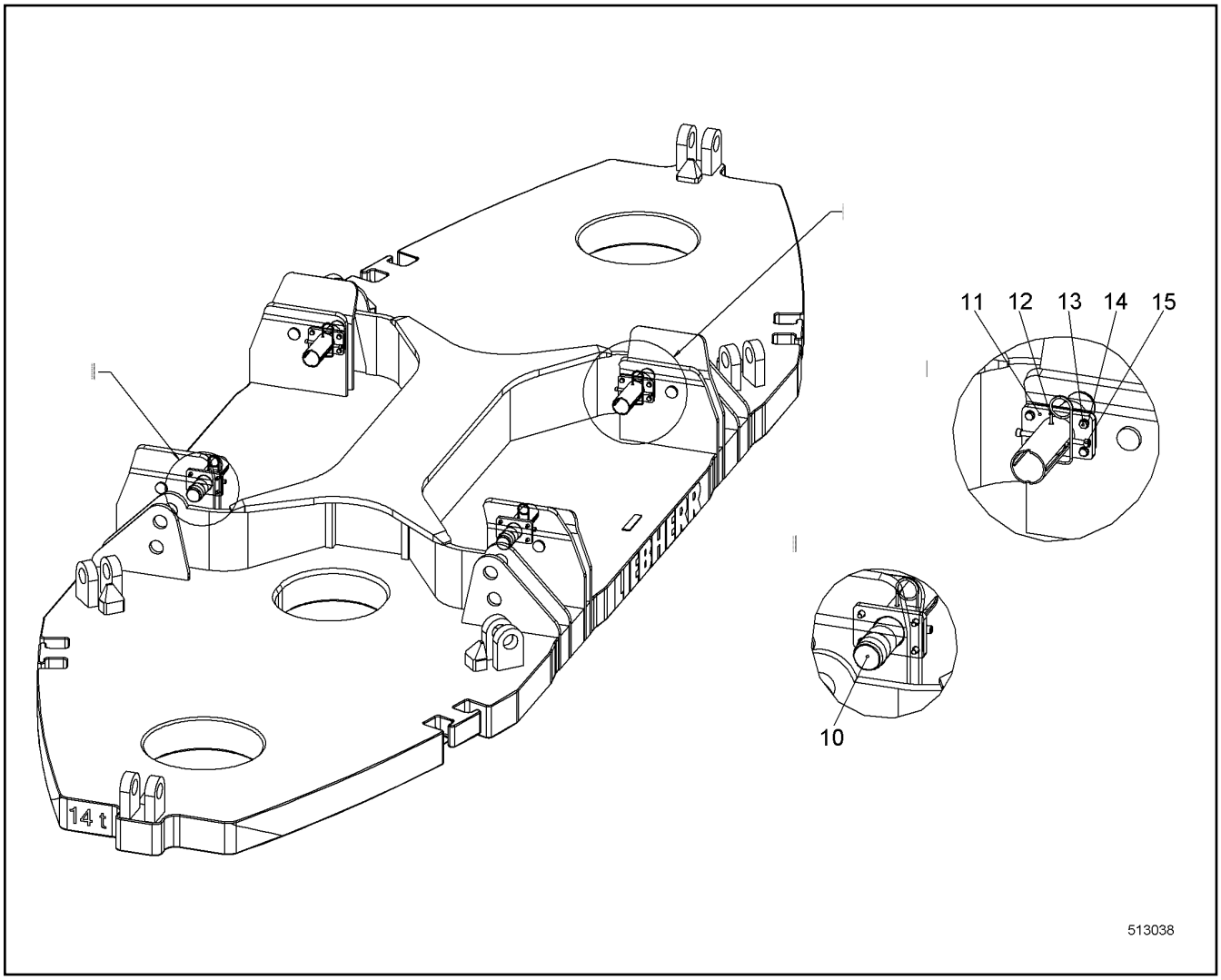

Pos.	Item	Quantity	Description	Bezeichnung	Serie	K
10	957831614	4	PIN 65X193 LHRD900-40;10019758	BOLZEN		
11	992757514	4	CONSOLE	KONSOLE		
12	433105414	4	RETAINING SPRING 4.5 MM	SICHERUNGSFEDER		
13	406511614	16	HEX SCREW ISO 4017 M10X30 A4-70	SECHSKANTSCHRAUBE		
14	420001114	16	WASHER ISO 7089 10 A4	SCHEIBE		
15	10539505	8	SOCKET HEAD SCREW ISO 4762 M10X60 A4-7	ZYLINDERSCHRAUBE		

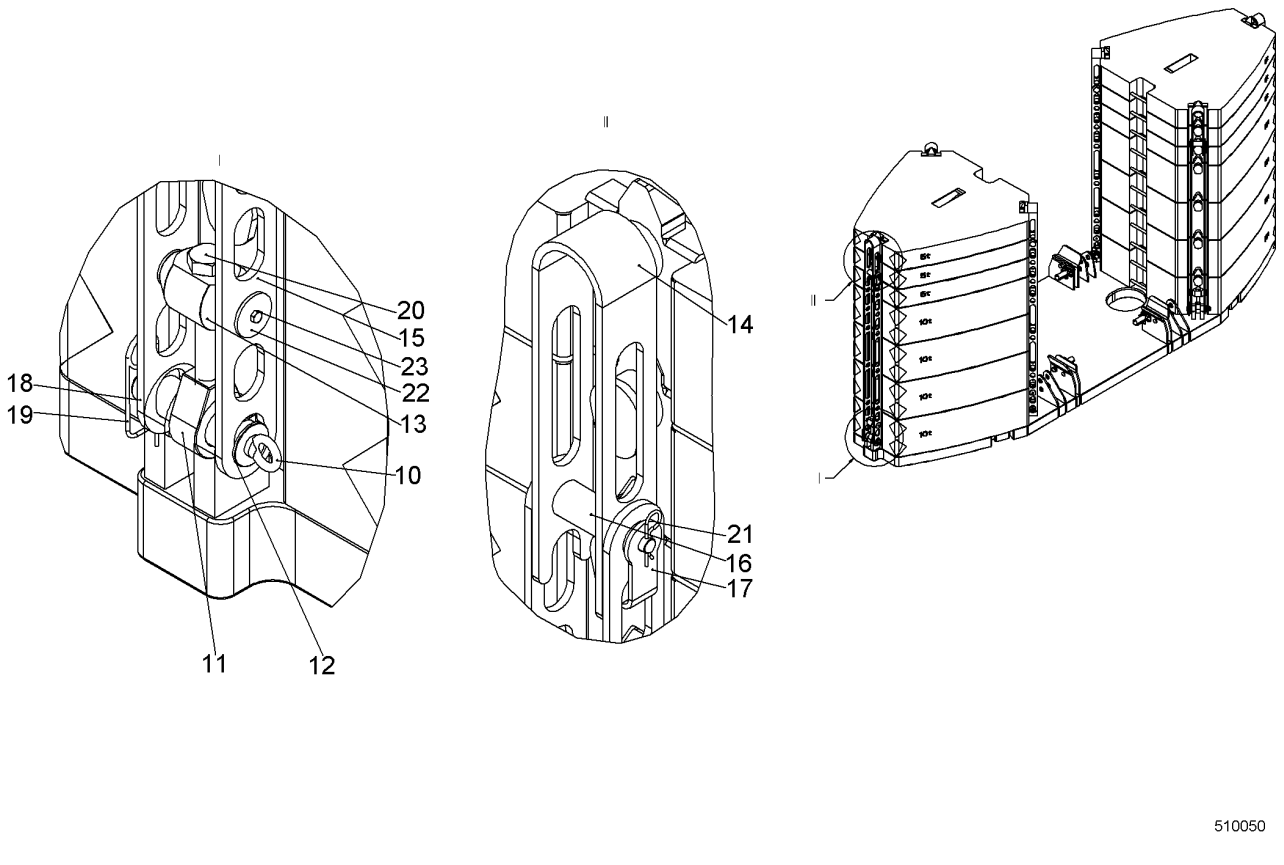

Pos.	Item	Quantity	Description	Bezeichnung	Serie	K
10	402600514	6	RING BOLT DIN 580 M16 C15E;EN 10084	RINGSCHRAUBE		
11	959912014	6	BUTT STRAP	LASCHE		
12	959912114	6	PIN 75X240 LHRD900-40;10019758	BOLZEN		
13	959912214	6	PIN 110X198 LHRD900-40;10019758	BOLZEN		
14	992982314	6	MOUNTING LINK ST. CONST.	LASCHE SCHWK		
15	959912514	12	BUTT STRAP	LASCHE		
16	959912614	6	PIN	BOLZEN		
17	959912714	6	LOCKING PLATE	SICHERUNGSBLECH		
18	421103614	6	WASHER DIN EN 28738 65 ST;	SCHEIBE		
19	433105008	6	RETAINING SPRING DIN 2194 6MM FS	SICHERUNGSFEDER		
20	406144514	6	HEX SCREW ISO 4014 M36X230 8.8	SECHSKANTSCHRAUBE		
21	433206314	6	SPRING PLUG DIN 11024 5	FEDERSTECKER		
22	947084514	12	WASHER 76/13X6 LH355-40;10019698	SCHEIBE		
23	406517714	12	HEX SCREW ISO 4017 M12X20 A4-70	SECHSKANTSCHRAUBE		

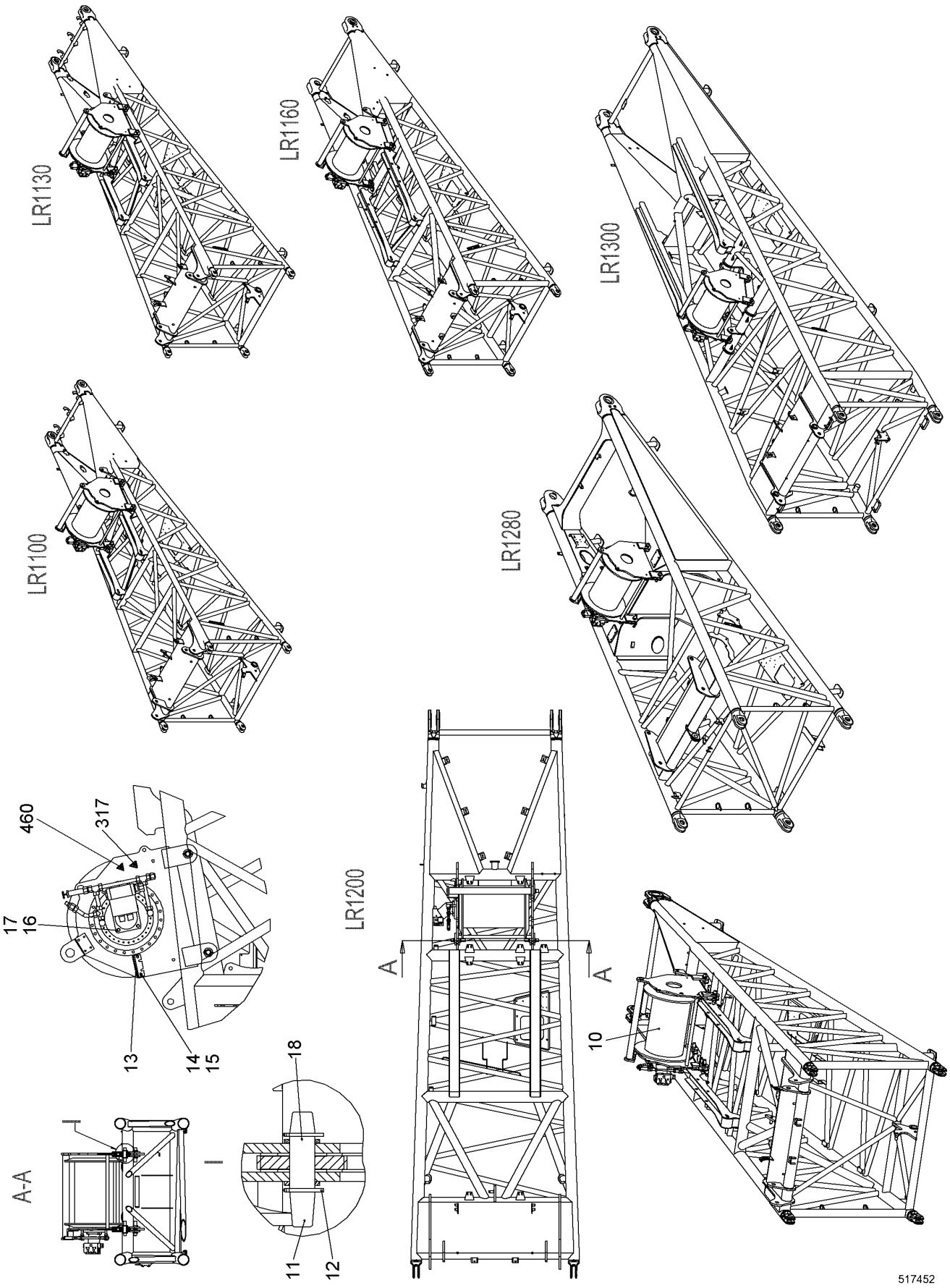

24.5.2017 517452 LIEBHERR	**138376_ETK_001** **NEEDLE LUFFING WINCH** **NADELEINZIEHWINDE**	❑ 342 (1/2) **10 51 969 7**

Pos.	Item	Quantity	Description	Bezeichnung	Serie	K
2	10519698	1	NEEDLE LUFFING WINCH HYDR ⇨ ❑ 344	NADELEINZIEHWINDE HYDR		
3	10226573	1	WIRING HARNESS	KABELSTRANG		
4	993324114	1	HOSE LIST ⇨ ❑ 347	SCHLAUCHLISTE		
10	969624801	1	WINCH ⇨ ❑ 348	WINDE		
11	10351894	4	PIN 40X182 LHRD900-40;10019758	BOLZEN		
12	433006714	8	SPLIT PIN ISO 1234 5X50	SPLINT		
13	954598503	1	VALVE HOLDER	VENTILHALTER		
14	420001014	2	WASHER ISO 7089 8 A4	SCHEIBE		
15	406501414	2	HEX SCREW ISO 4017 M8X25 A4-70	SECHSKANTSCHRAUBE		
16	425221314	4	SERRATED LOCK WASHER DIN 6798 13	FAECHERSCHEIBE		
17	4600706	4	HEX SCREW ISO 4017 M12X45 10.9	SECHSKANTSCHRAUBE		
18	421103014	8	WASHER DIN EN 28738 40 ST	SCHEIBE		
317	773195214	1	SIGN	SCHILD		
460	773195614	2	NAMEPLATE UVV	SCHILD UVV		
500		-1	GRATING	GITTERROST		
501		-1	GRATING	GITTERROST		

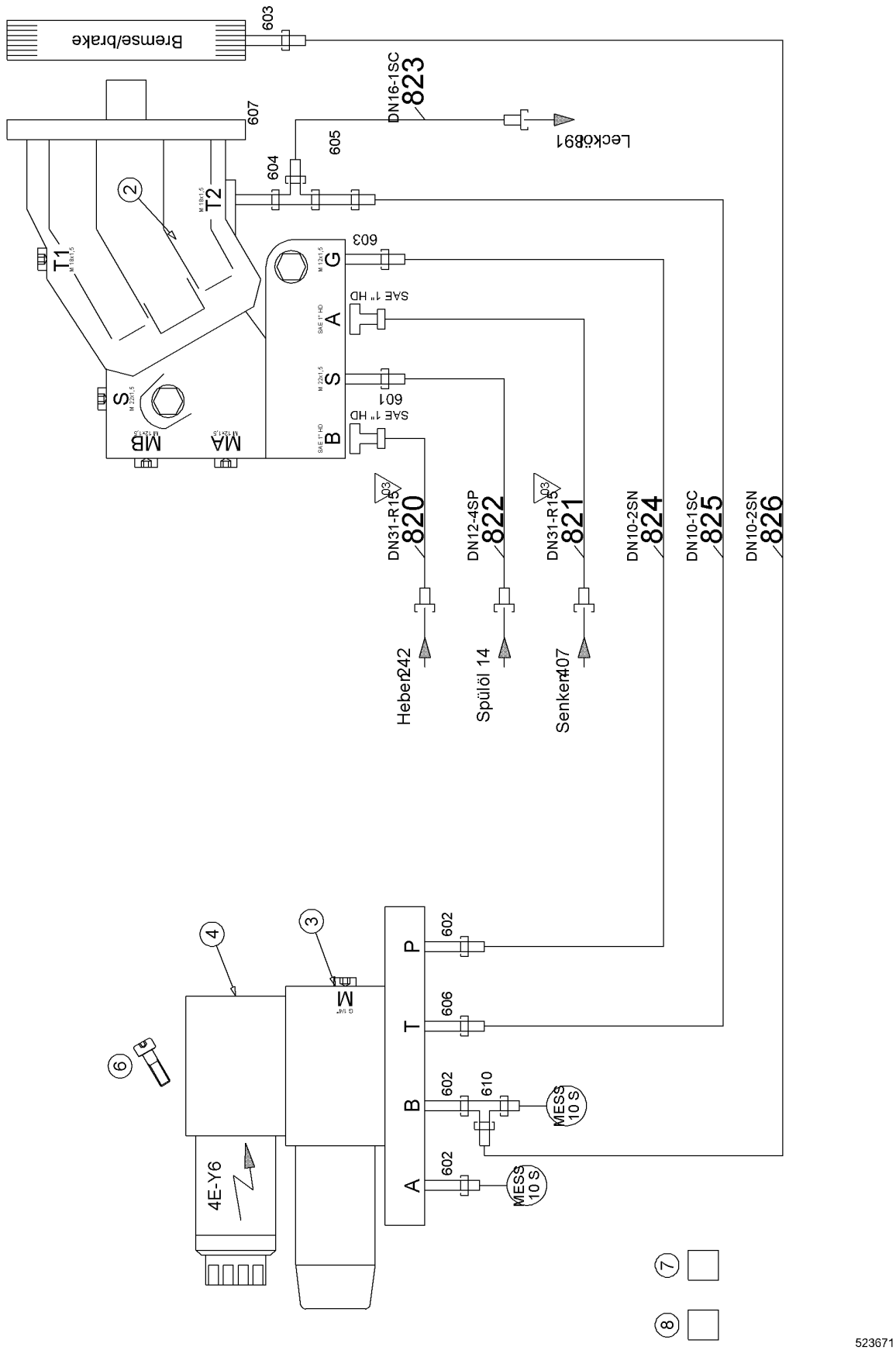

24.5.2017 523671 LIEBHERR	**138376_ETK_001** **NEEDLE LUFFING WINCH HYDR** **NADELEINZIEHWINDE HYDR**	❑ 344 (1/2) **10 51 969 8**

Pos.	Item	Quantity	Description	Bezeichnung	Serie	K
2	512252714	1	OIL MOTOR ⇨ ❑ 346	OELMOTOR		
3	511476914	1	PRESSURE REDUCTION VALVE	DRUCKREDUZIERVENTIL		
4	511432714	1	DIRECTIONAL CONTROL VALVE	WEGEVENTIL		
5	510662914	1	CONNECTING PLATE	ANSCHLUSSPLATTE		
6	404302914	1	SOCKET HEAD SCREW ISO 4762 M5X90 10.9	ZYLINDERSCHRAUBE		
7	7621780	1	LASHING STRAP	ZURRGURT		
8	10020519	1	LASHING STRAP	ZURRGURT		
201	510694514	2	GAUGE CONNECTION	MESSSTUTZEN		
601	471033014	1	FITTING	VERSCHRAUBUNG		
602	471032808	3	FITTING	VERSCHRAUBUNG		
603	471004614	2	FITTING	VERSCHRAUBUNG		
604	247128502	1	FITTING	VERSCHRAUBUNG		
605	247040302	1	FITTING	VERSCHRAUBUNG		
606	247009402	1	FITTING	VERSCHRAUBUNG		
607	471034714	1	FITTING	VERSCHRAUBUNG		
610	7367776	1	FITTING	VERSCHRAUBUNG		
620	510586914	4	FLANGE HALF	FLANSCHHAELFTE		
630	10490781	2	RECTANGULAR SECTION RING	RECHTECKRING		
640	4600366	8	HEX SCREW ISO 4017 M12X40 10.9	SECHSKANTSCHRAUBE		

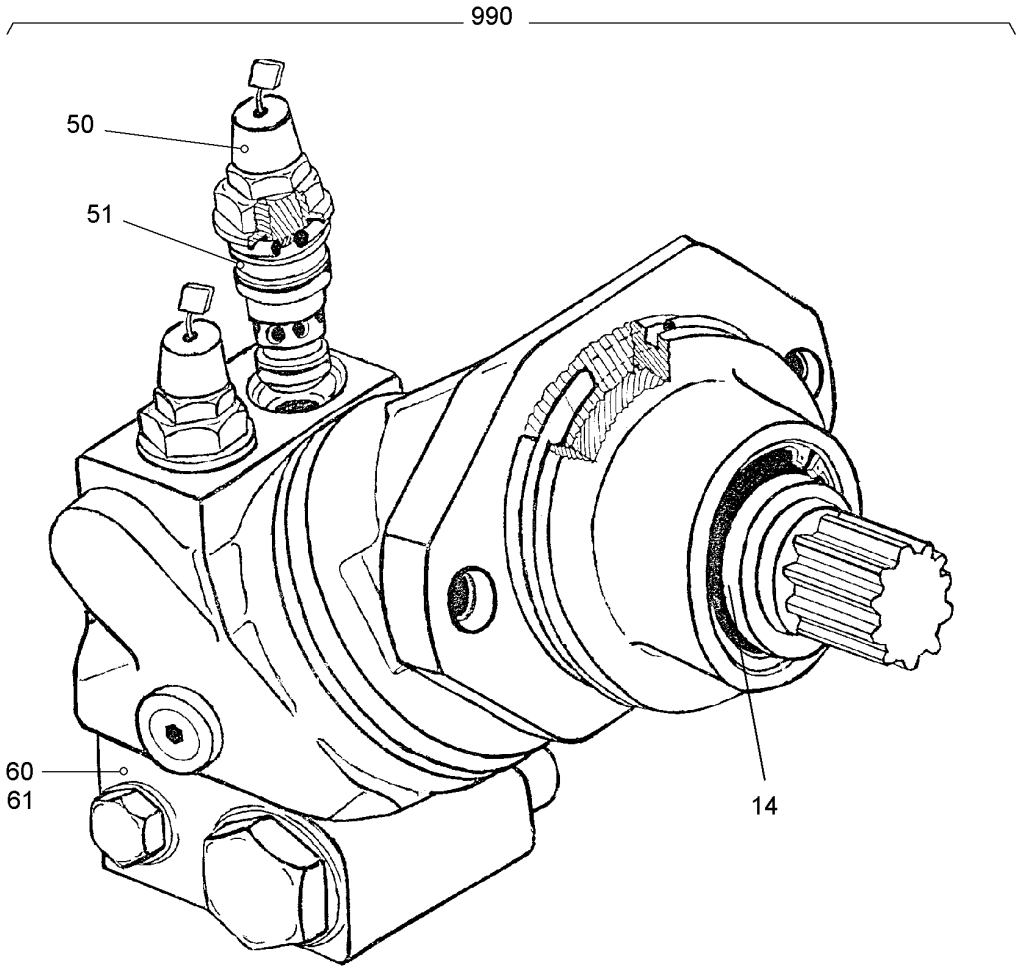

Pos.	Item	Quantity	Description	Bezeichnung	Serie	K
14	10564158	1	SHAFT SEAL	WELLENDICHTRING		
50	511619614	2	PRESSURE LIMITING VALVE	DRUCKBEGRENZUNGSVENTIL		
51	511493914	2	SEALING SET	DS		
60	10227399	1	BRAKE VALVE	BREMSVENTIL		
61	512259514	1	SEALING SET	DS		
990	512259414	1	SEALING SET	DS		

ACHTUNG !
ATTENTION !
ATTENTION !
ATENCIÓN !
ATENÇÃO !
ВНИМАНИЕ

Für Schlauchbestellungen kann über die Schlauchnummer, in der entsprechenden Schlauchliste, die Identnummer festgestellt werden.

For ordering flexible hoses you can find the identification number through the hose-number in the corresponding hose-list.

Pour des ordres de tuyau flexible le nombre d'identification on voit dans la liste de tuyau flexible correspondente.

Para el pedido de manguera, indicar el número de identificación de la manguera de la lista respectiva.

Para se encomendar uma mangueira, consulte o número de identificaçao na respectiva lista de mangueiras.

Для оформления заказов на шланги/рукавы идент. № может быть определен при помощи номера шланга/рукава, указанного в соотетствующем перечне шлангов/рукавов.

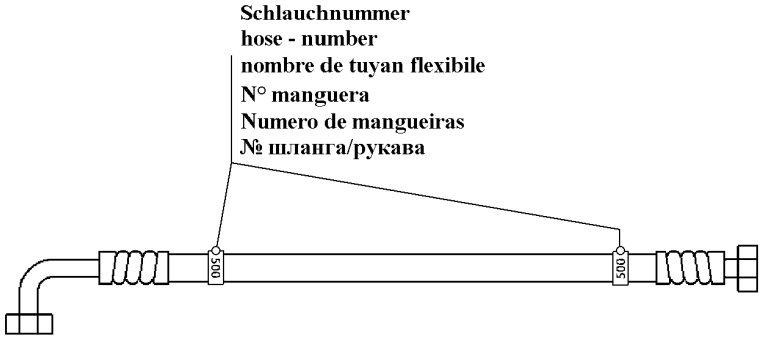

500000

Pos.	Item	Quantity	Description	Bezeichnung	Serie	K
820	996625314	1	HOSE CPL	SCHLAUCH KPL		
821	996625414	1	HOSE CPL	SCHLAUCH KPL		
822	993623814	1	HOSE CPL	SCHLAUCH KPL		
823	928861314	1	HOSE CPL	SCHLAUCH KPL		
824	918882614	1	HOSE CPL	SCHLAUCH KPL		
825	928326514	1	HOSE CPL	SCHLAUCH KPL		
826	918870914	1	HOSE CPL	SCHLAUCH KPL		

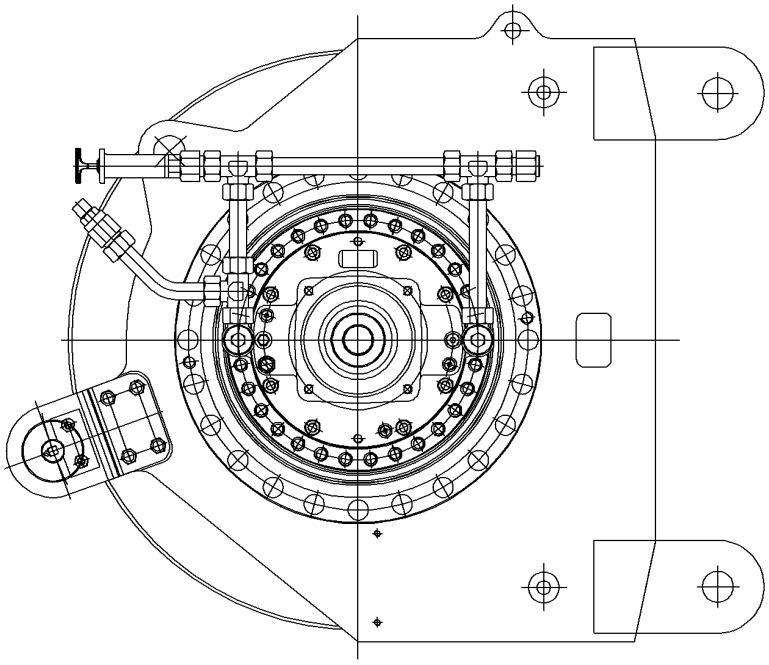

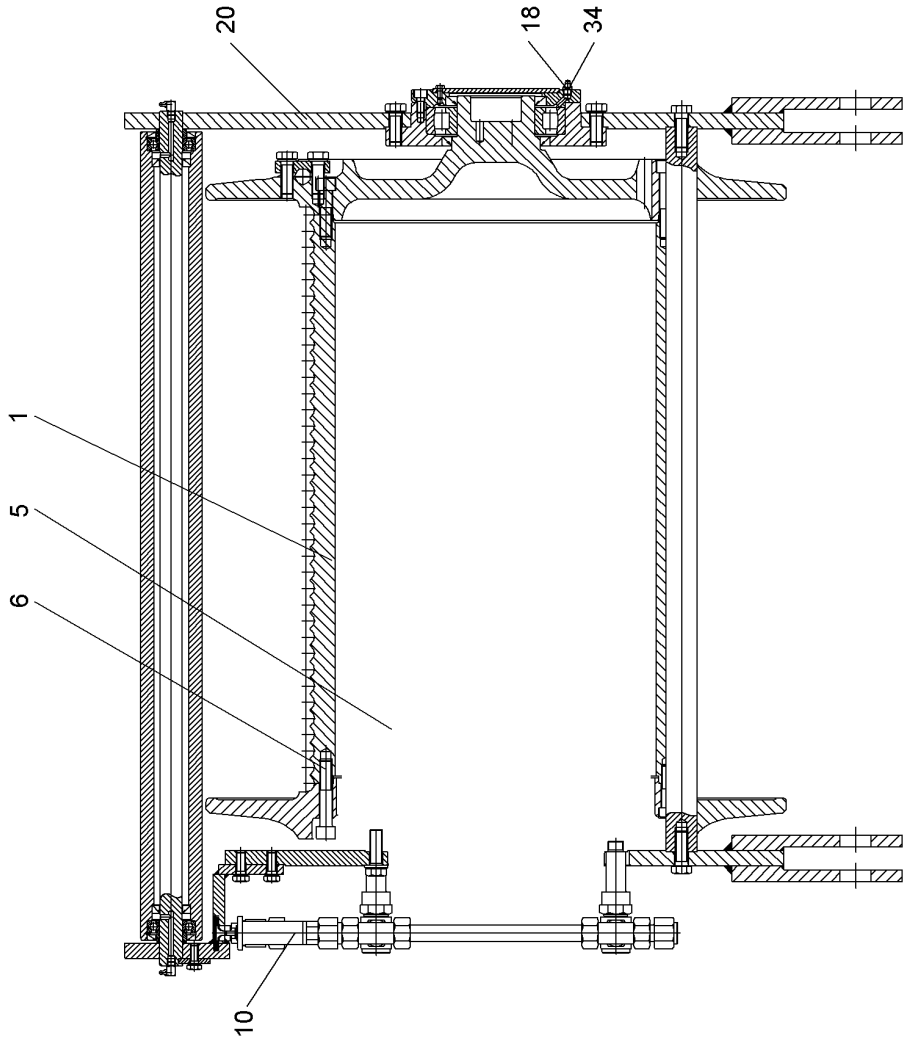

609537

Pos.	Item	Quantity	Description	Bezeichnung	Serie	K
1	938850001	1	ROPE DRUM ⇨ ❑ 350	SEILTROMMEL		
5	938849701	1	PLANETARY GEARBOX ⇨ ❑ 351	PLANETENGETRIEBE		
6	10191905	24	SOCKET HEAD SCREW ISO 4762 M16X85 10.9	ZYLINDERSCHRAUBE		
10	933675501	1	OIL-GAUGING INSTRUMENT ⇨ ❑ 356	OELMESSEINRICHTUNG		
18	7743242	1	HYDRAULIC-TYPE LUBRICAT.NIPPLE	KEGELSCHMIERNIPPEL		
20	969654301	1	WINCH FRAME ⇨ ❑ 357	WINDENRAHMEN		
34	789000701	1	PROTECTING CAP	SCHUTZKAPPE		

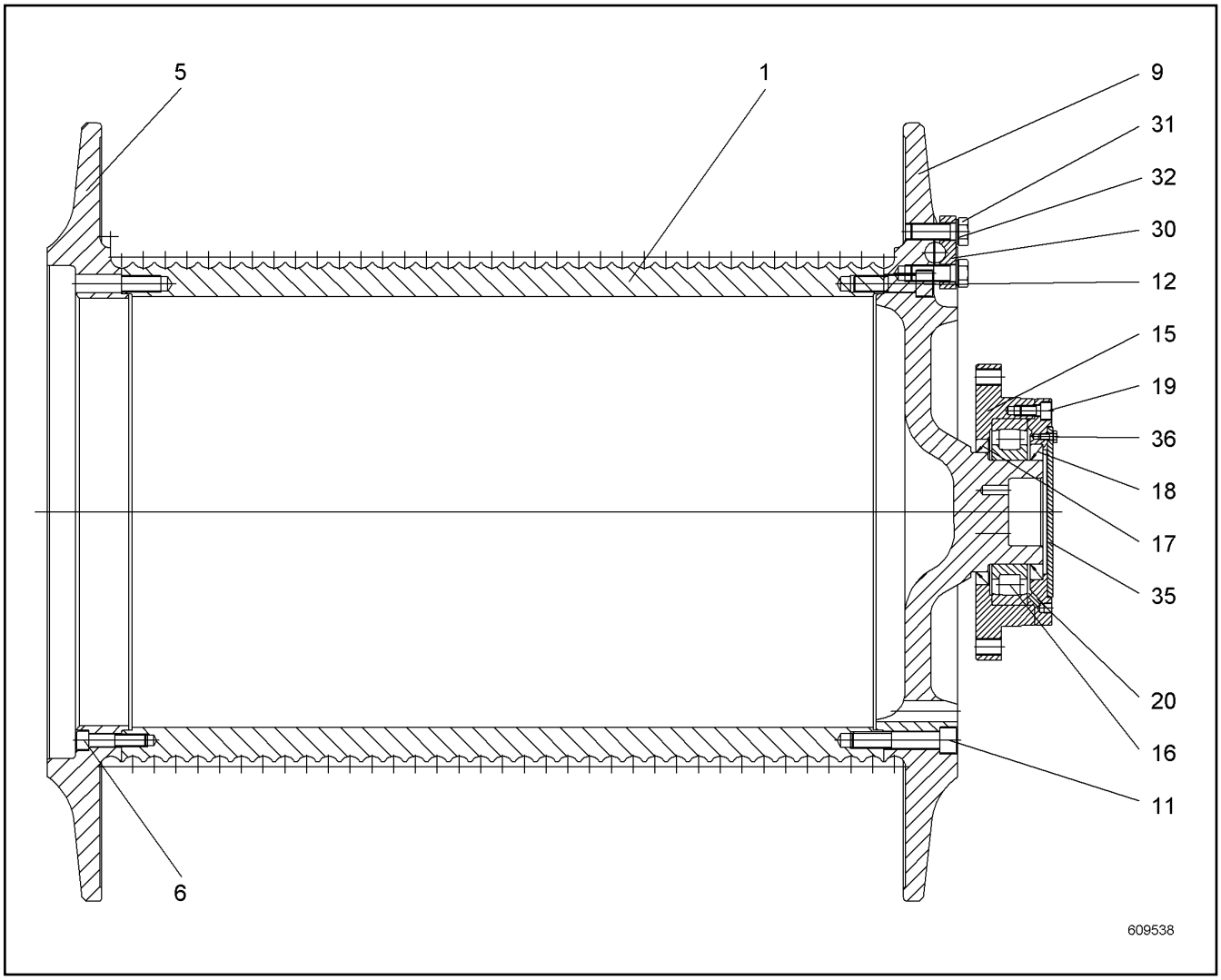

Pos.	Item	Quantity	Description	Bezeichnung	Serie	K
1	938850101	1	DRUM	TROMMEL		
5	938850201	1	LIMMIT DISK	ENDSCHEIBE UL		
6	10539520	3	SOCKET HEAD SCREW ISO 4762 M12X55 A4-7	ZYLINDERSCHRAUBE		
9	939556301	1	END WASHER EL	ENDSCHEIBE EL		
11	10191905	18	SOCKET HEAD SCREW ISO 4762 M16X85 10.9	ZYLINDERSCHRAUBE		
12	10544072	6	SOCKET HEAD SCREW ISO 4762 M16X60 10.9	ZYLINDERSCHRAUBE		
15	939556201	1	SUPPORT FLANGE	STUETZFLANSCH		
16	746001701	1	SELF-ALIGNING ROLLER BEARING	PENDELROLLENLAGER		
17	710048501	1	ROTARY SHAFT LIP SEAL	RADIALWELLENDICHTRING		
18	710029801	1	ROTARY SHAFT LIP SEAL	RADIALWELLENDICHTRING		
19	404208814	6	SOCKET HEAD SCREW ISO 4762 M10X20 A4-7	ZYLINDERSCHRAUBE		
20	939554301	1	COVER	DECKEL		
30	319719401	5	CLAMPING PIECE	KLEMMSTUECK		
31	10543902	10	HEX SCREW ISO 4017 M16X45 10.9	SECHSKANTSCHRAUBE		
32	423911601	10	LOCK WASHER 16X17X24X2.6 VS	SICHERUNGSSCHEIBE		
35	932037701	1	COVER	DECKEL		
36	485557714	3	HEX SCREW ISO 4017 M6X12 A4-70	SECHSKANTSCHRAUBE		

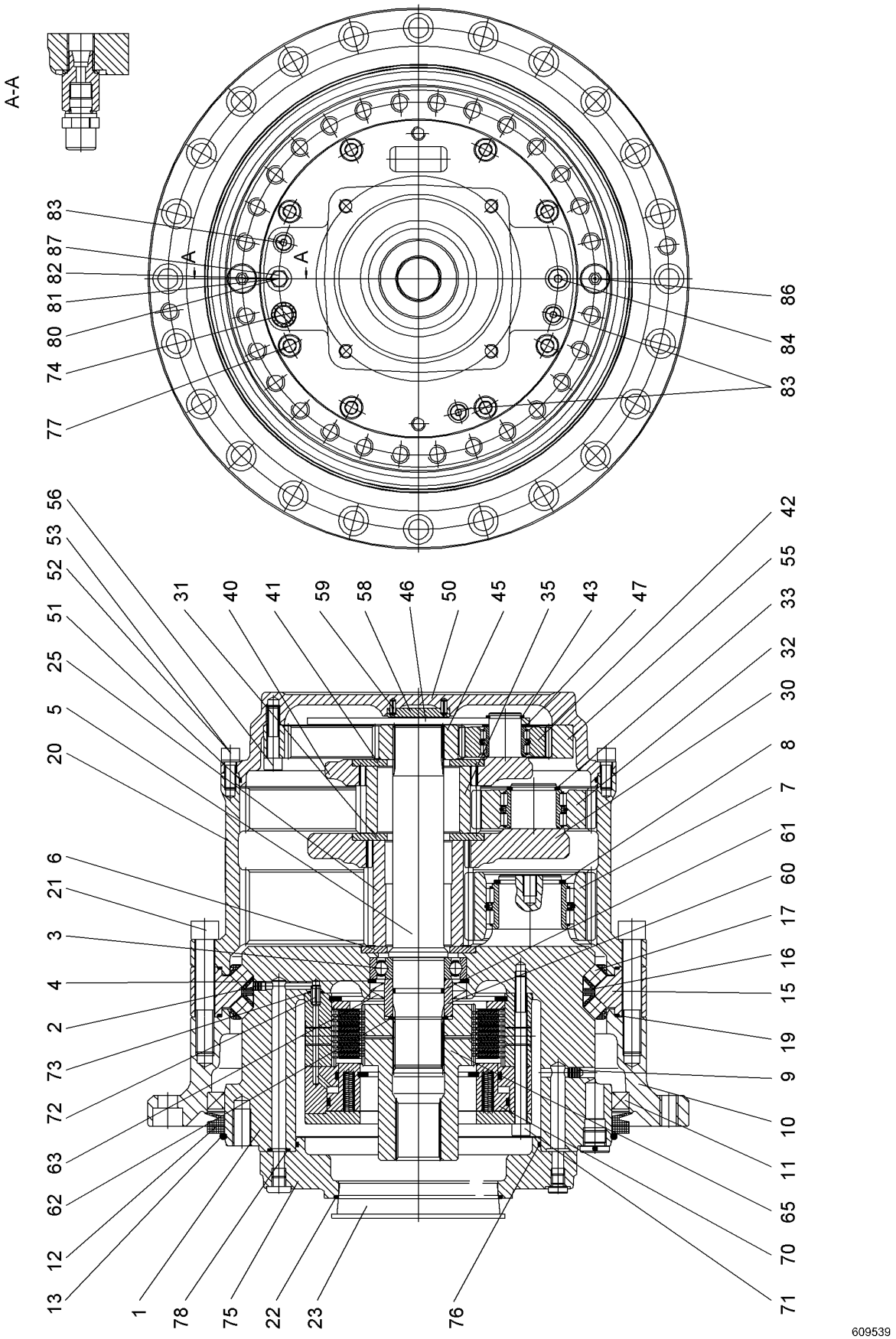
A-A
A
A
83
87
82
81
80
74
77
86
84
83
56
53
52
51
25
5
20
6
21
3
4
2
73
72
63
62
12
13
31
40
41
59
58
46
50
45
35
43
47
42
55
33
32
30
8
7
61
60
17
16
15
19
9
10
11
65
70
71
1
78
75
22
23
76
609539

Pos.	Item	Quantity	Description	Bezeichnung	Serie	K
1		1	CONNECTION CARRIER	ANSCHLUSSTRAEGER		
2		1	SEALING PLUG	DICHTSTOPFEN		
3		1	DEEP GROOVE BALL BEARING	RILLENKUGELLAGER		
4		1	LOCKING RING DIN 472 85X3	SICHERUNGSRING		
5		1	DRIVE SHAFT	ANTRIEBSWELLE		
6		1	RETAINING DISK	HALTESCHEIBE		
7		5	PLANET WHEEL	PLANETENRAD		
8		5	LOCKING RING DIN 471 55X3	SICHERUNGSRING		
9		3	SEALING PLUG	DICHTSTOPFEN		
10		1	POWER TAKE-OFF FLANGE	ABTRIEBSFLANSCH		
11		1	ROTARY SHAFT LIP SEAL	RADIALWELLENDICHTRING		
12		1	RING	RING		
13		1	O-RING	O-RING		
15		1	BEARING RING	LAGERRING		
16		38	ROLLER CAGE	ROLLENKAEFIG		
17		114	CYL.ROLLER	ZYLINDERROLLE		
19		2	O-RING	O-RING		
20		1	INNER WHEEL	INNENRAD		
21		24	SOCKET HEAD SCREW ISO 4762 M16X100 10.	ZYLINDERSCHRAUBE		
22		1	O-RING	O-RING		
23		1	CONICAL PLUG	KEGELSTOPFEN		
25		1	SUN WHEEL	SONNENRAD		
30		1	PLANETARY CARRIER	PLANETENTRAEGER		
31		1	RETAINING DISK 115X55X6	HALTESCHEIBE		
32		3	PLANET WHEEL	PLANETENRAD		
33		3	LOCKING RING DIN 471 40X2.5	SICHERUNGSRING		
35		1	SUN WHEEL	SONNENRAD		
40		1	PLANETARY CARRIER	PLANETENTRAEGER		
41		1	RETAINING DISK 115X55X6	HALTESCHEIBE		
42		3	PLANET WHEEL	PLANETENRAD		
43		3	LOCKING RING DIN 471 28X2	SICHERUNGSRING		
45		1	SUN WHEEL	SONNENRAD		
46		1	THRUST WASHER	ANLAUFSCHEIBE		
47		3	SUPPORTING WASHER DIN 988 S28X40X2 F	STUETZSCHEIBE		
50		1	SUPPORT FLANGE	STUETZFLANSCH		
51		1	O-RING	O-RING		
52		12	SOCKET HEAD SCREW ISO 4762 M10X25 A4-7	ZYLINDERSCHRAUBE		
53		12	LOCK WASHER 10.5/16X2 VS10	SICHERUNGSSCHEIBE		
55		1	INNER WHEEL	INNENRAD		
56		12	SOCKET HEAD SCREW ISO 4762 M10X45 A4-7	ZYLINDERSCHRAUBE		
58		1	WASHER	SCHEIBE		
59		2	DOWEL PIN ISO 8752 5X12 ST	SPANNSTIFT		
60		1	SLEEVE	LAUFRING		
61		1	O-RING	O-RING		
62		1	SNAP RING AV45X1.75	SPRENGRING		
63		2	ROTARY SHAFT LIP SEAL	RADIALWELLENDICHTRING		
65		1	MULTI-DISC CARRIER	LAMELLENTRAEGER		
70		1	SPRING LOADED MULTI-DISC BRAKE	FEDERDRUCKLAMELLENBREMS		
71		12	SOCKET HEAD SCREW ISO 4762 M10X130 10.	ZYLINDERSCHRAUBE		
72		1	DOWEL PIN ISO 8752 8X16 ST	SPANNSTIFT		
73		1	O-RING	O-RING		
74		1	BLANKING PLUG	VERSCHLUSSSTOPFEN		
75		1	MOTOR FLANGE	MOTORFLANSCH		
76		1	O-RING	O-RING		
77		8	SOCKET HEAD SCREW ISO 4762 M12X40 A4-7	ZYLINDERSCHRAUBE		
78		8	O-RING	O-RING		
80		1	FITTING	VERSCHRAUBUNG		
81		1	SEALING RING	DICHTRING		
82		1	VENTILATION VALVE	ENTLUEFTUNGSVENTIL		
83		3	FITTING	VERSCHRAUBUNG		

Pos.	Item	Quantity	Description	Bezeichnung	Serie	K
84		1	SCREW PLUG	VERSCHLUSSSCHRAUBE		
86		2	SCREW PLUG	VERSCHLUSSSCHRAUBE		
87		1	SEALING RING	DICHTRING		

OHNE BILD
WITHOUT ILLUSTRATION
SANS PLANCHE
SIN FIG.
SEM ILUSTRAÇÃO
БЕЗ ИЗОБРАЖЕНИЯ

600000

Pos.	Item	Quantity	Description	Bezeichnung	Serie	K
1	939589501	1	BRAKE MULTI-DISC SET ⇨ ❑ 355	BREMSLAMELLENSATZ		
2	939589601	1	BRAKE PACKING SET	BREMSE-DICHTUNGSSATZ		
3	939589701	1	BRAKE SPRING SET	BREMSFEDERSATZ		

OHNE BILD
WITHOUT ILLUSTRATION
SANS PLANCHE
SIN FIG.
SEM ILUSTRAÇÃO
БЕЗ ИЗОБРАЖЕНИЯ

600000

Pos.	Item	Quantity	Description	Bezeichnung	Serie	K
8	503192801	10	OUTER MULTI-DISC	AUSSENLAMELLE		
9	503192901	9	INTERNAL MULTI-DISC	INNENLAMELLE		

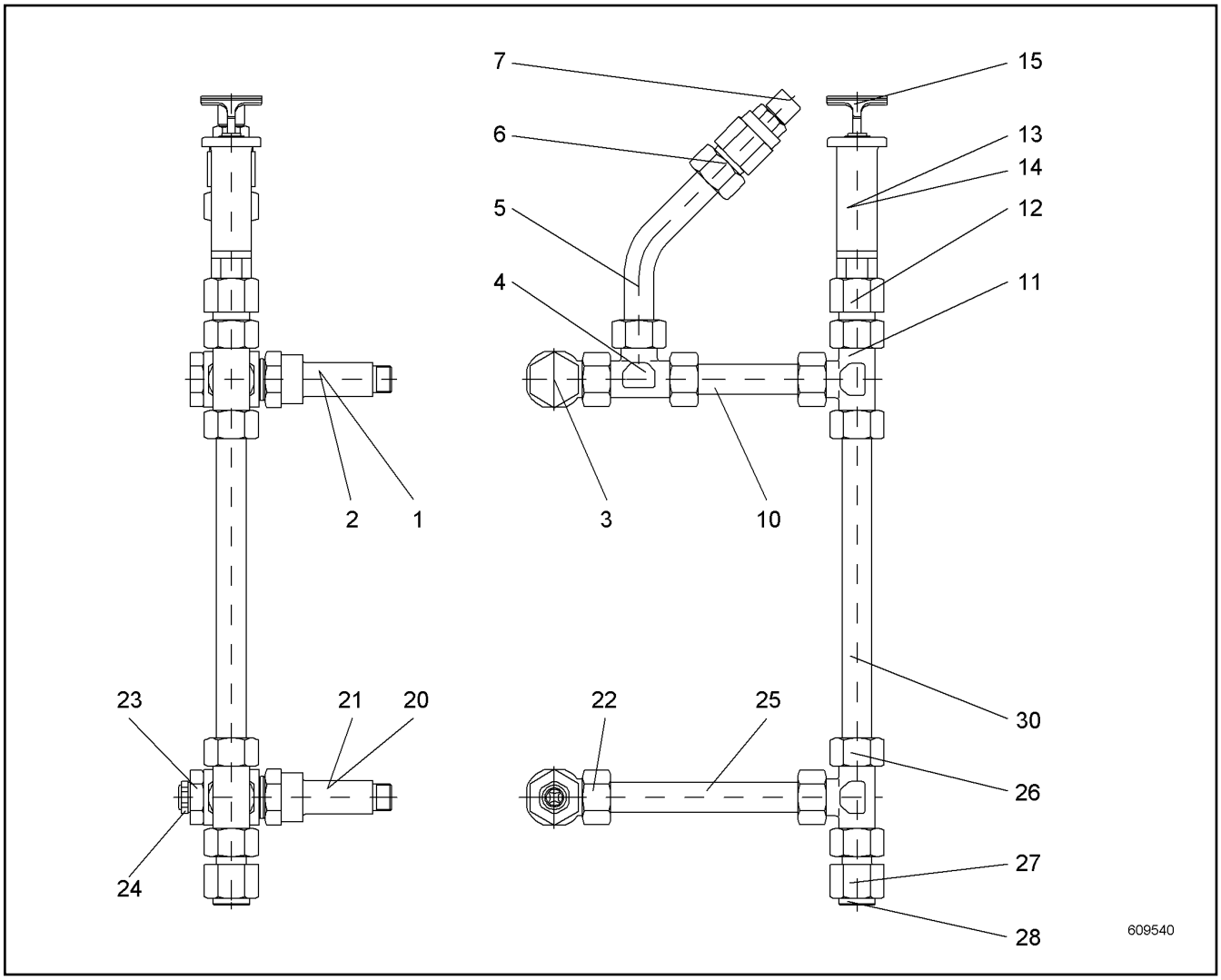

Pos.	Item	Quantity	Description	Bezeichnung	Serie	K
1	927739401	1	THREADED CONNECTION PIECE	GEWINDEANSCHLUSSSTUTZEN		
2	761022903	1	SEALING RING	DICHTRING		
3	473201101	1	FITTING	VERSCHRAUBUNG		
4	472001401	1	FITTING	VERSCHRAUBUNG		
5	933676701	1	TUBE	ROHR		
6	470702001	1	FITTING	VERSCHRAUBUNG		
7	721108801	1	VENTILATION AND AERATION FILTE	BE-UND ENTLUEFTUNGSFILTER		
10	10190120	1	TUBE	ROHR		
11	470400701	1	FITTING	VERSCHRAUBUNG		
12	927586201	1	CONNECTION STUB	ANSCHLUSSSTUTZEN		
13	927501901	1	VENTILATION CONNECTING PIECE	ENTLUEFTUNGSSTUTZEN		
14	7610225	1	SEALING RING	DICHTRING		
15	927610201	1	OIL DIPSTICK	OELMESSSTAB		
20	927739401	1	THREADED CONNECTION PIECE	GEWINDEANSCHLUSSSTUTZEN		
21	761022903	1	SEALING RING	DICHTRING		
22	473201101	1	FITTING	VERSCHRAUBUNG		
23	933676601	1	SCREW PLUG	VERSCHLUSSSCHRAUBE		
24	10022192	1	OIL LEVEL SIGHT GLASS	OELSCHAUGLAS		
25	999832101	1	TUBE	ROHR		
26	470400701	1	FITTING	VERSCHRAUBUNG		
27	927586201	1	CONNECTION STUB	ANSCHLUSSSTUTZEN		
28	7361961	1	SCREW PLUG	VERSCHLUSSSCHRAUBE		
30	979323301	1	TUBE	ROHR		

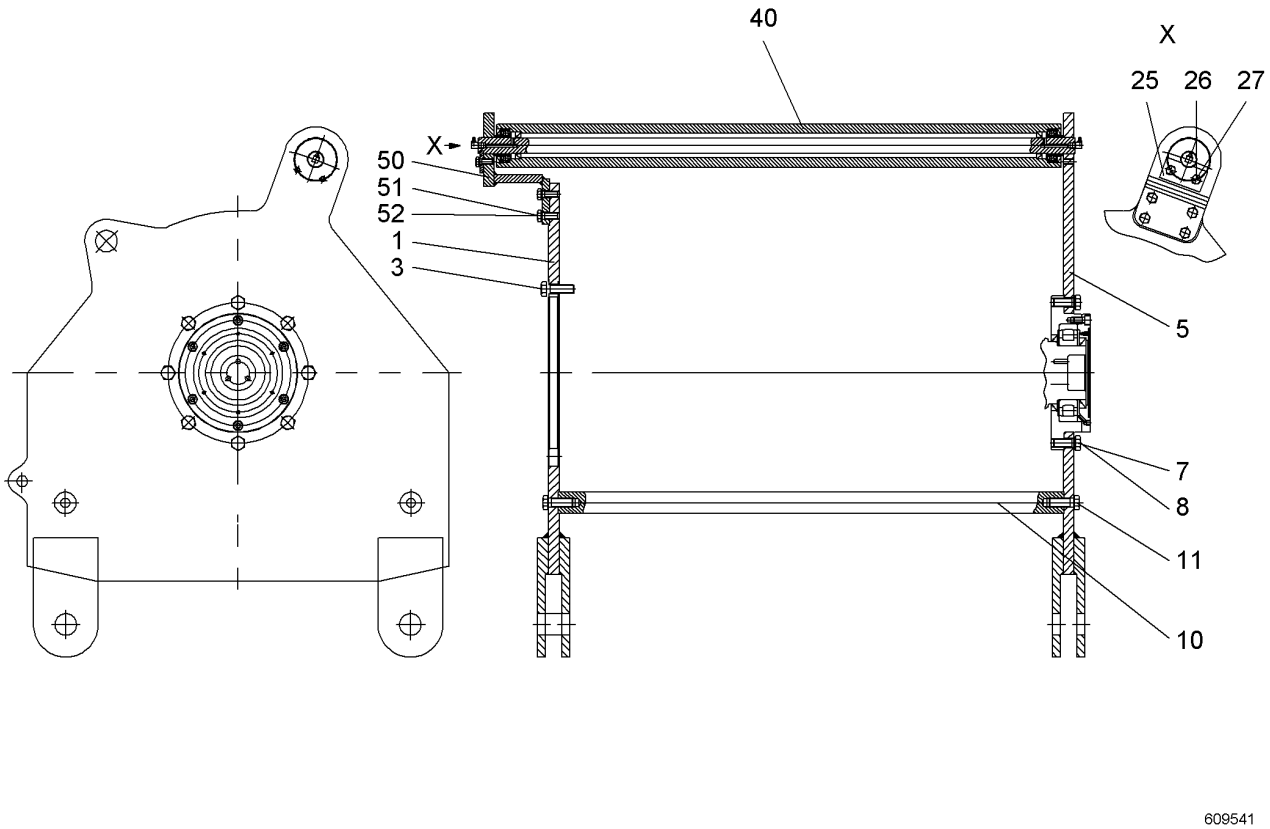

Pos.	Item	Quantity	Description	Bezeichnung	Serie	K
1	969655301	1	CONNECTION PLATE	ANSCHLUSSSCHILD		
3	10543903	28	HEX SCREW ISO 4017 M16X50 10.9	SECHSKANTSCHRAUBE		
5	938858501	1	CONNECTION PLATE	ANSCHLUSSSCHILD		
7	10539318	8	HEX SCREW ISO 4017 M16X40 10.9	SECHSKANTSCHRAUBE		
8	423911601	8	LOCK WASHER 16X17X24X2.6 VS	SICHERUNGSSCHEIBE		
10	938858701	2	STRUT	STREBE		
11	10543902	4	HEX SCREW ISO 4017 M16X45 10.9	SECHSKANTSCHRAUBE		
25	997040201	1	AXLE HOLDER	ACHSHALTER		
26	406511914	2	HEX SCREW ISO 4017 M10X25 A4-70	SECHSKANTSCHRAUBE		
27	4229913	2	LOCK WASHER 10.5/16X2 VS10	SICHERUNGSSCHEIBE		
40	969641401	1	SAFETY ROLLER	SCHUTZWALZE		
50	969641501	1	HOLDER	HALTER		
51	406517314	4	HEX SCREW ISO 4017 M12X30 A4-70	SECHSKANTSCHRAUBE		
52	4900093	4	LOCK WASHER 12X13X18X2.1	SICHERUNGSSCHEIBE		

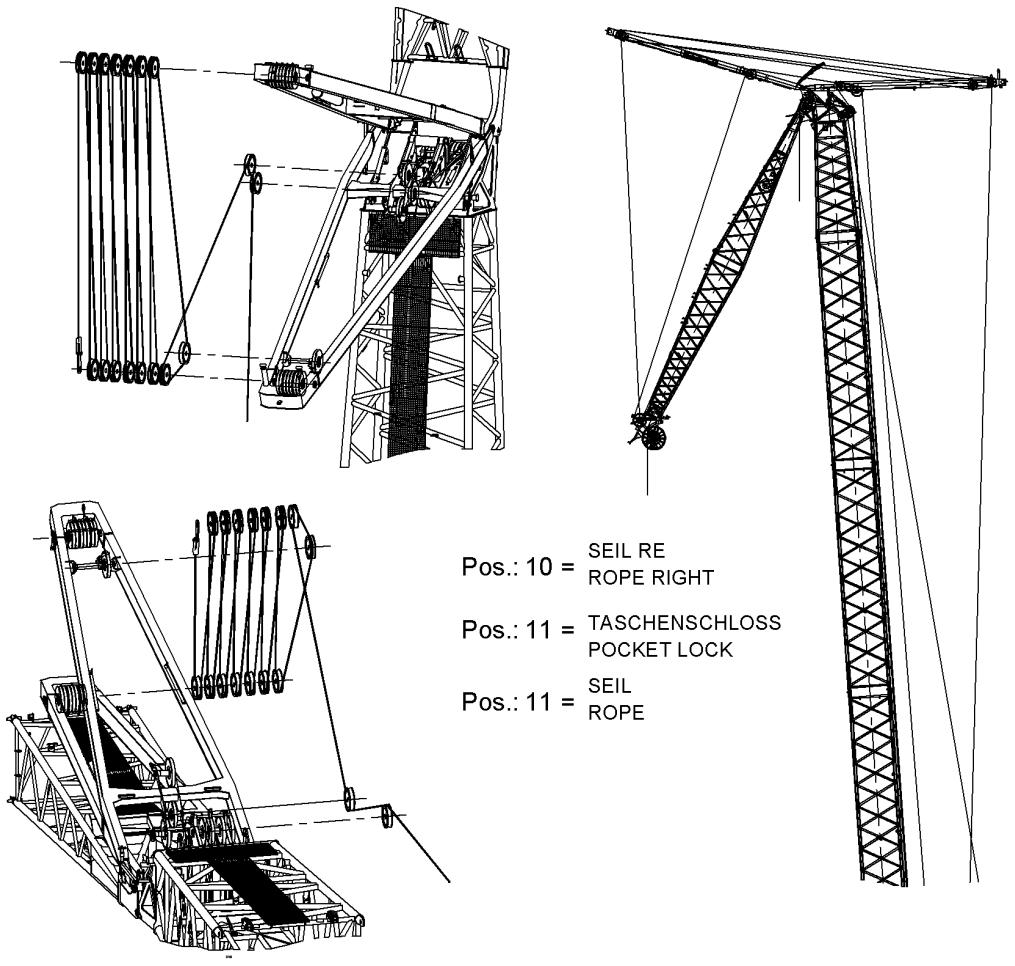

Pos.	Item	Quantity	Description	Bezeichnung	Serie	K
10	10227828	1	ROPE RIGHT	SEIL RE		
11	773941308	1	POUCH SOCKET	TASCHENSCHLOSS		
12	774730714	40	ROPE	SEIL		

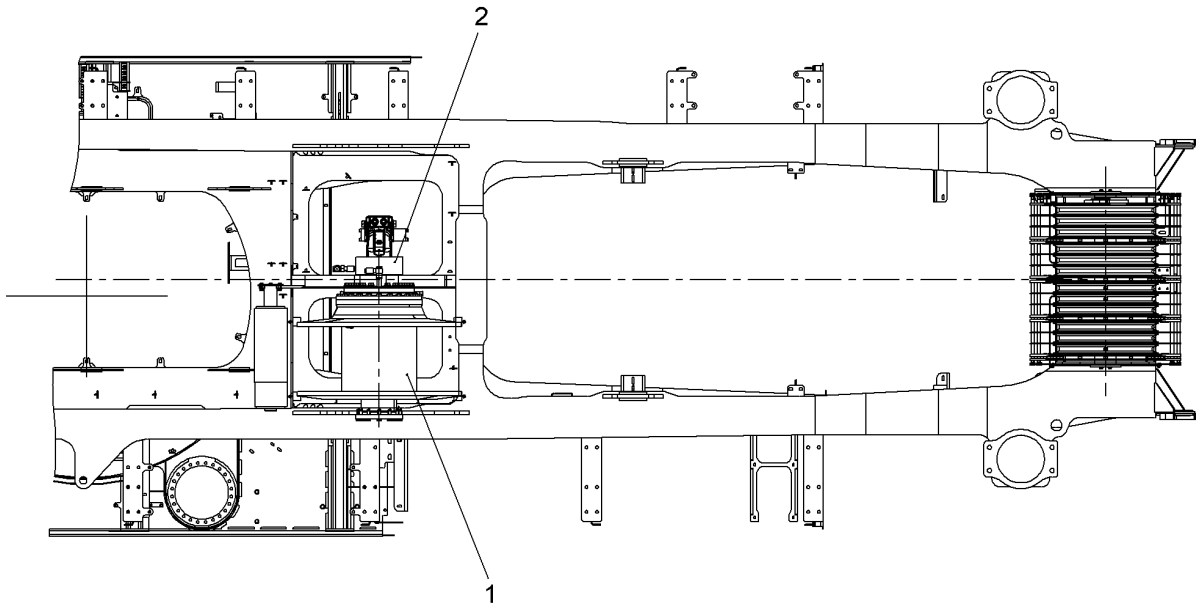

Pos.	Item	Quantity	Description	Bezeichnung	Serie	K
1	10519686	1	LUG SUPERSTRUCTURE CPL ⇨ ❑ 360	EZW OW EINBAU KPL		
2	990494114	1	DRIVE UNIT ⇨ ❑ 378	ANTRIEBSEINHEIT		

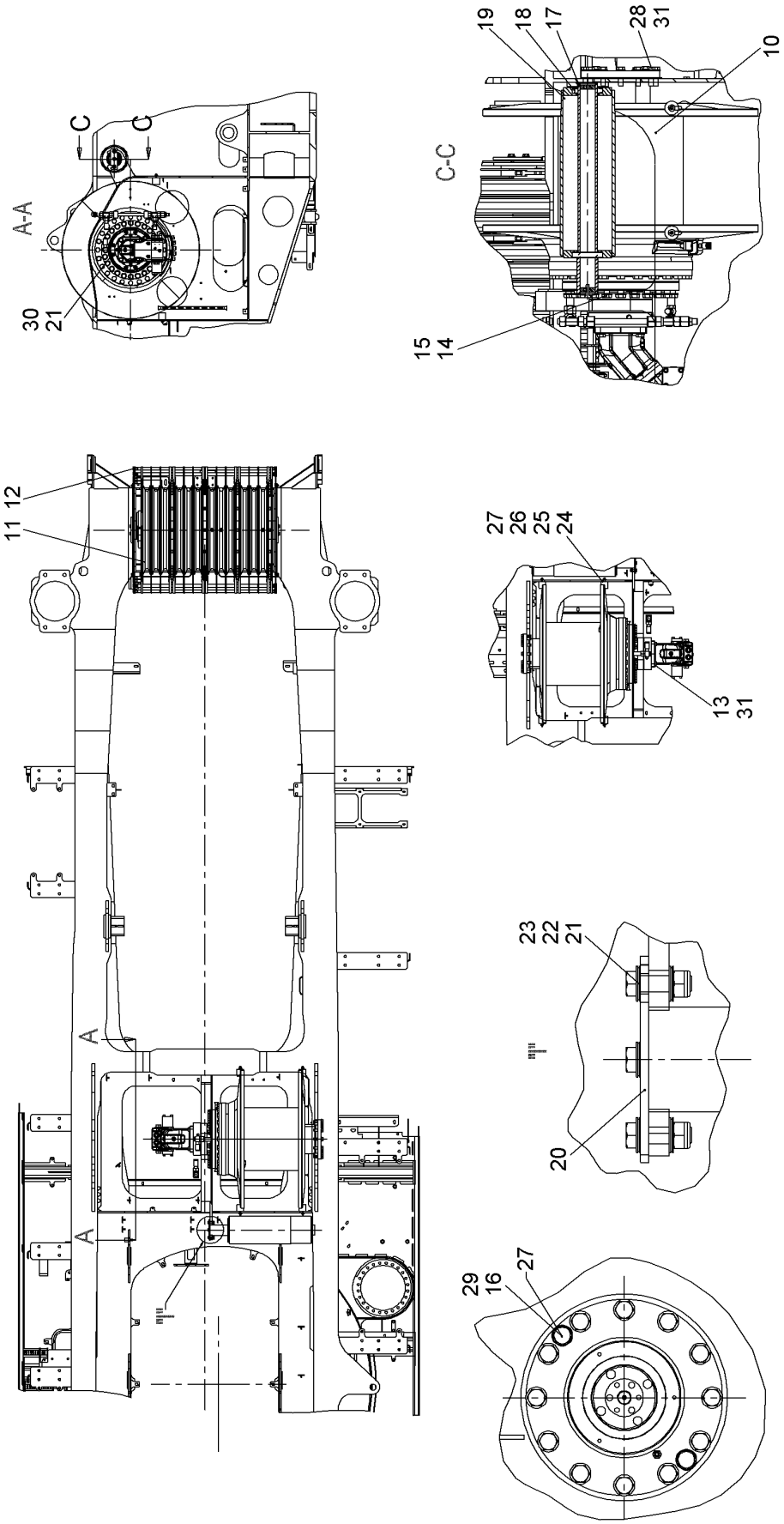
A-A
C
C
30
21
C-C
19
18
17
28
31
10
15
14
11 12
A
A
27
26
25
24
13
31
23
22
21
20
29
16
27
516503

Pos.	Item	Quantity	Description	Bezeichnung	Serie	K
2	10519687	1	MAIN LUG HYDR ⇨ ❑ 362	HAUPT EZW HYDR		
4	10552085	1	HOSE LIST ⇨ ❑ 364	SCHLAUCHLISTE		
10	10551563	1	WINCH ⇨ ❑ 365	WINDE		
11	992925814	1	LUG SHEAVE SET ⇨ ❑ 370	EZW ROLLENPAKET		
12	992925914	1	ROPE GUARD LUG CPL ⇨ ❑ 371	SEILSCHUTZ EZW KPL		
13	10543903	4	HEX SCREW ISO 4017 M16X50 10.9	SECHSKANTSCHRAUBE		
14	10543920	22	HEX SCREW ISO 4017 M20X40 10.9	SECHSKANTSCHRAUBE		
15	10536600	22	WEDGE LOCK WASHER M20	KEILSICHERUNGSSCHEIBE		
16	460024203	2	WASHER DIN 6916 17 C45	SCHEIBE		
17	918539614	1	AXLE	ACHSE		
18	746171514	2	DEEP GROOVE BALL BEARING	RILLENKUGELLAGER		
19	971361703	1	ROLLER ST.CONST.	ROLLE SCHWK		
20	949892214	1	WP	WP		
21	10536582	13	WEDGE LOCK WASHER M12 254 SMO;EN 10	KEILSICHERUNGSSCHEIBE		
22	406511414	3	HEX SCREW ISO 4017 M12X40 A4-70	SECHSKANTSCHRAUBE		
23	10540495	2	HEX NUT ISO 10511 M12 A4	SECHSKANTMUTTER		
24	289064214	4	SPACER PIECE	DISTANZSTUECK		
25	10539488	4	SOCKET HEAD SCREW ISO 4762 M8X60 A4-7	ZYLINDERSCHRAUBE		
26	10540493	4	HEX NUT ISO 10511 M8 A4	SECHSKANTMUTTER		
27	10540510	4	WASHER ISO 7093-1 8 A4	SCHEIBE		
28	10543905	12	HEX SCREW ISO 4017 M16X60 10.9	SECHSKANTSCHRAUBE		
29	10539315	2	HEX SCREW ISO 4017 M16X25 10.9	SECHSKANTSCHRAUBE		
30	4043003	8	SOCKET HEAD SCREW ISO 4762 M12X40 10.9	ZYLINDERSCHRAUBE		
31	7623374	16	WEDGE LOCK WASHER M16	KEILSICHERUNGSSCHEIBE		

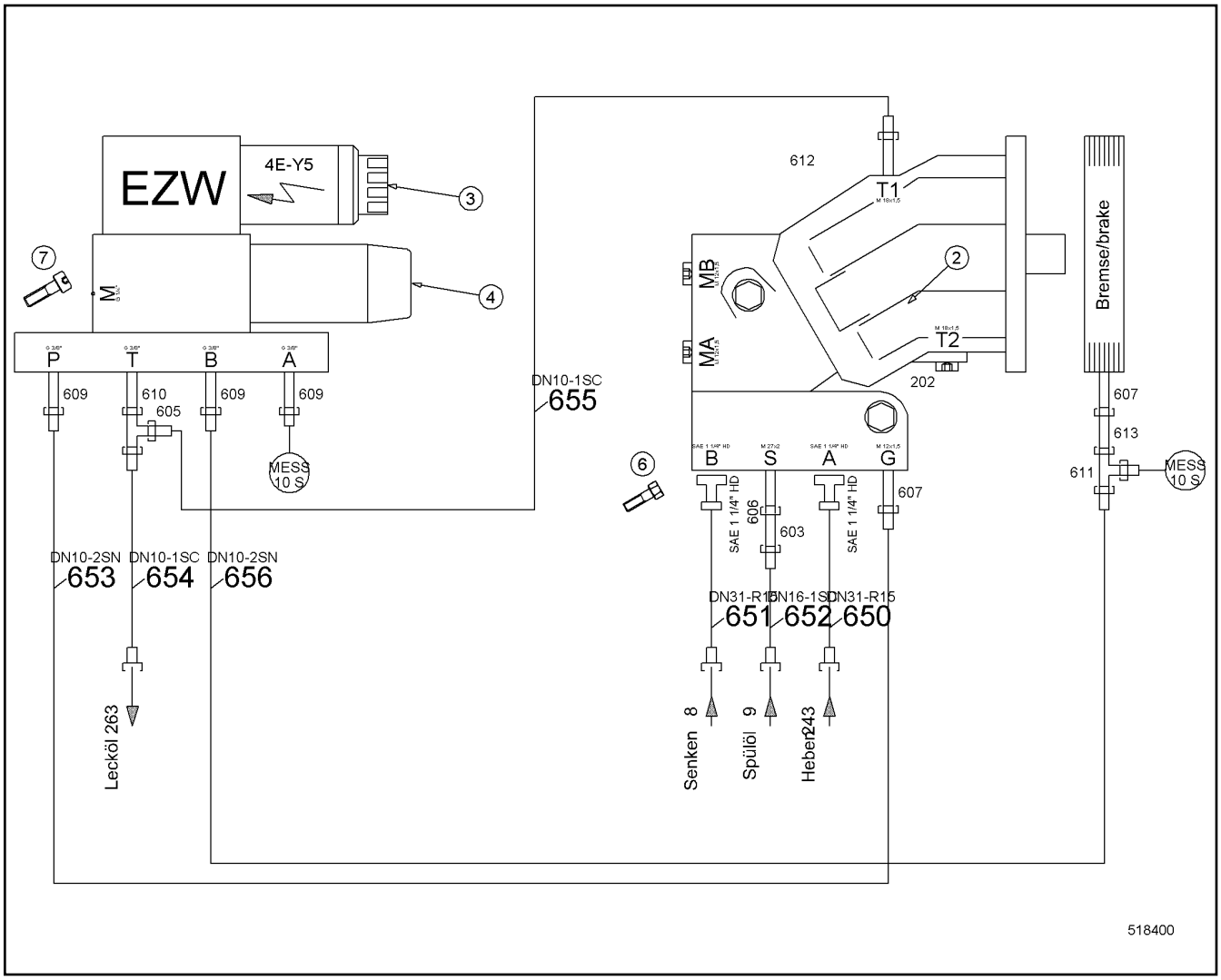

Pos.	Item	Quantity	Description	Bezeichnung	Serie	K
2	512294214	1	OIL MOTOR ⇨ ❑ 363	OELMOTOR		
3	511432714	1	DIRECTIONAL CONTROL VALVE	WEGEVENTIL		
4	511476914	1	PRESSURE REDUCTION VALVE	DRUCKREDUZIERVENTIL		
5	510662914	1	CONNECTING PLATE	ANSCHLUSSPLATTE		
6	10539311	6	HEX SCREW ISO 4017 M14X130 10.9	SECHSKANTSCHRAUBE		
7	404302914	4	SOCKET HEAD SCREW ISO 4762 M5X90 10.9	ZYLINDERSCHRAUBE		
201	510694514	2	GAUGE CONNECTION	MESSSTUTZEN		
202	477705114	1	FITTING	VERSCHRAUBUNG		
603	7407108	1	FITTING	VERSCHRAUBUNG		
605	247128602	1	FITTING	VERSCHRAUBUNG		
606	471033314	1	FITTING	VERSCHRAUBUNG		
607	471004614	2	FITTING	VERSCHRAUBUNG		
609	471032808	3	FITTING	VERSCHRAUBUNG		
610	247009402	1	FITTING	VERSCHRAUBUNG		
611	7367776	1	FITTING	VERSCHRAUBUNG		
612	471039408	1	FITTING	VERSCHRAUBUNG		
613	7617268	1	FITTING	VERSCHRAUBUNG		
615	10539300	2	HEX SCREW ISO 4017 M14X45 10.9	SECHSKANTSCHRAUBE		
616	10472425	2	RECTANGULAR SECTION RING	RECHTECKRING		
617	510586614	4	FLANGE HALF	FLANSCHHAELFTE		

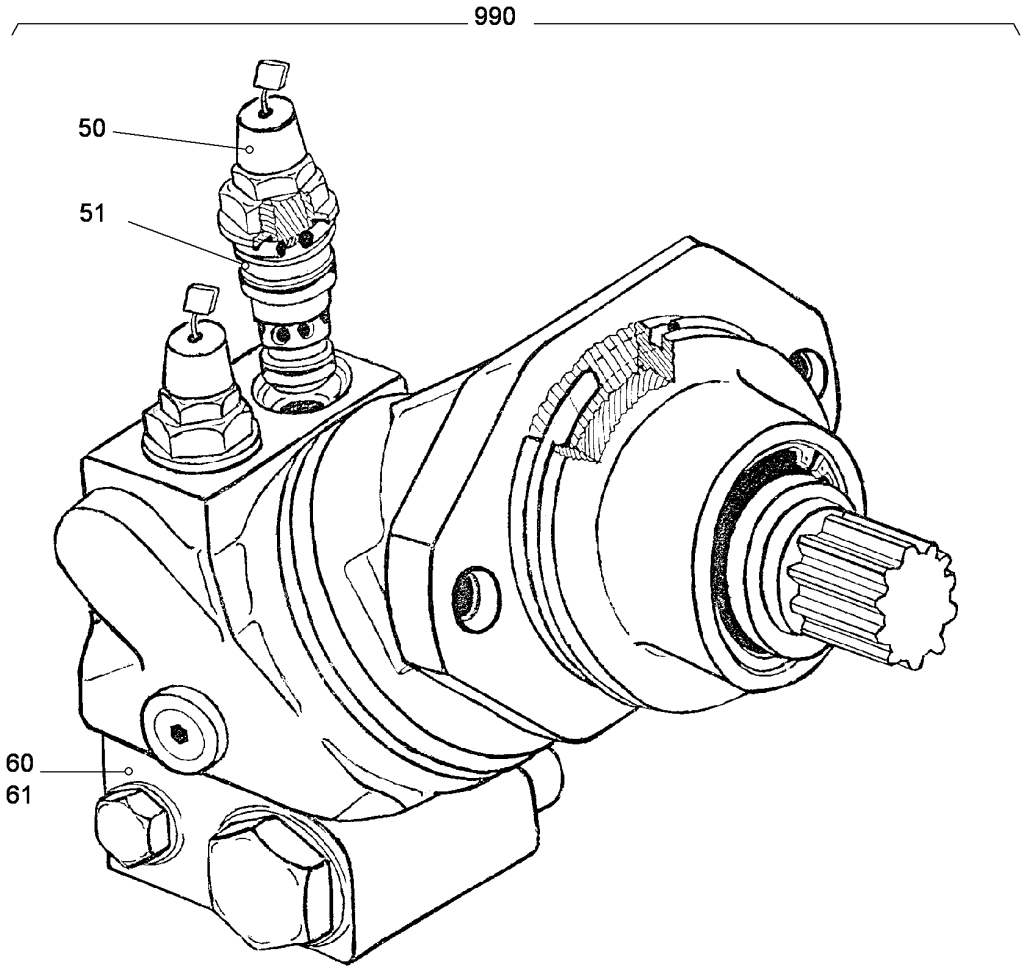

Pos.	Item	Quantity	Description	Bezeichnung	Serie	K
50	511639714	2	PRESSURE LIMITING VALVE	DRUCKBEGRENZUNGSVENTIL		
51	512401514	2	SEALING SET	DS		
60	512401414	1	BRAKE VALVE	BREMSVENTIL		
61	511614214	1	SEALING SET	DS		
990	512402214	1	SEAL KIT CPL.	DICHTSATZ KPL.		

ACHTUNG !
ATTENTION !
ATTENTION !
ATENCIÓN !
ATENÇÃO !
ВНИМАНИЕ

Für Schlauchbestellungen kann über die Schlauchnummer, in der entsprechenden Schlauchliste, die Identnummer festgestellt werden.

For ordering flexible hoses you can find the identification number through the hose-number in the corresponding hose-list.

Pour des ordres de tuyau flexible le nombre d'identification on voit dans la liste de tuyau flexible correspondente.

Para el pedido de manguera, indicar el número de identificación de la manguera de la lista respectiva.

Para se encomendar uma mangueira, consulte o número de identificaçao na respectiva lista de mangueiras.

Для оформления заказов на шланги/рукавы идент. № может быть определен при помощи номера шланга/рукава, указанного в соотетствующем перечне шлангов/рукавов.

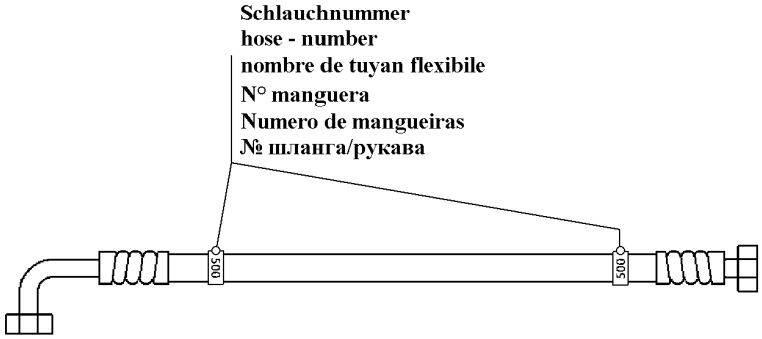

500000

Pos.	Item	Quantity	Description	Bezeichnung	Serie	K
650	995951314	1	HOSE CPL	SCHLAUCH KPL		
651	995951414	1	HOSE CPL	SCHLAUCH KPL		
652	991170814	1	HOSE CPL	SCHLAUCH KPL		
653	993213714	1	HOSE CPL	SCHLAUCH KPL		
654	993751514	1	HOSE CPL	SCHLAUCH KPL		
655	914763014	1	HOSE CPL	SCHLAUCH KPL		
656	928950414	1	HOSE CPL	SCHLAUCH KPL		

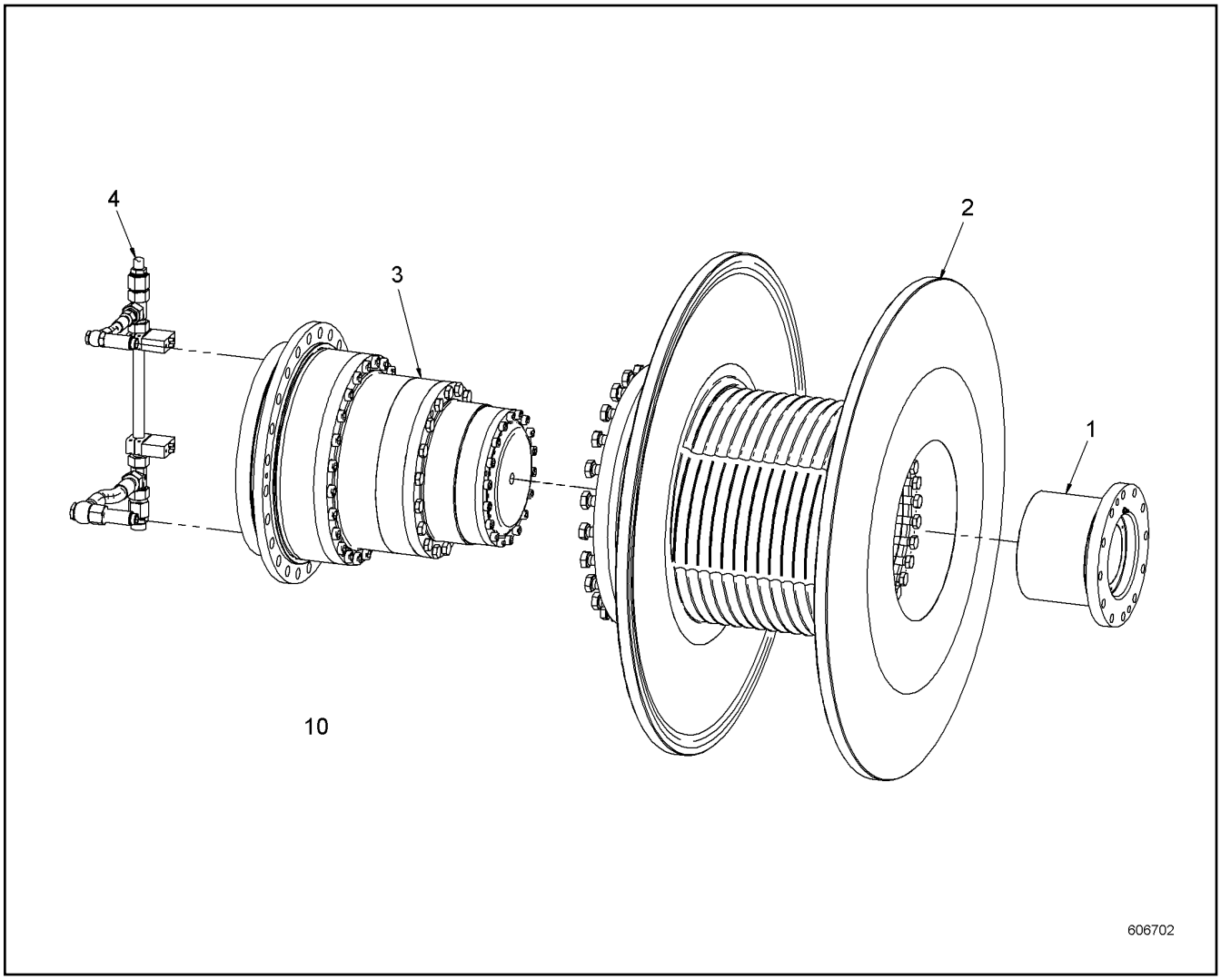

Pos.	Item	Quantity	Description	Bezeichnung	Serie	K
1	10583864	1	FLANGE ⇨ ❑ 366	FLANSCH		
2	10555973	1	ROPE DRUM ⇨ ❑ 367	SEILTROMMEL		
3	10583865	1	GEARBOX ⇨ ❑ 368	GETRIEBE		
4	10583845	1	OIL LINE ⇨ ❑ 369	OELLEITUNG		
10	10547904	1	SCREW LOCKING	SCHRAUBENSICHERUNG		
200	10595126	1	SEALING SET CPL	DS KPL		

1

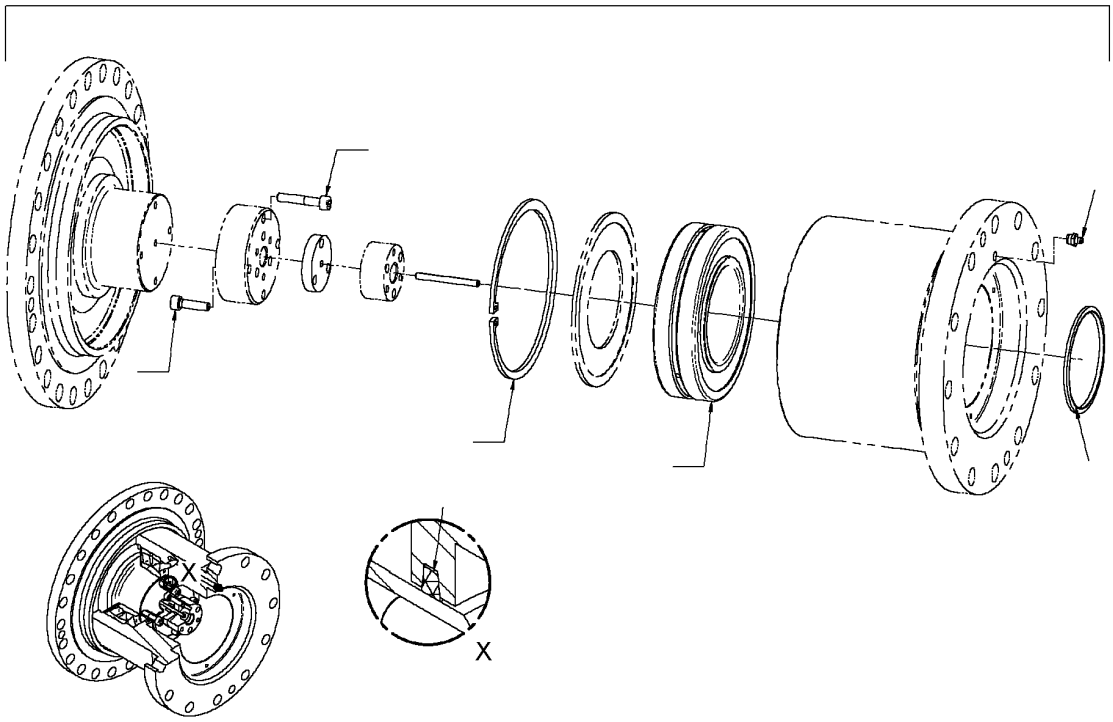

Pos.	Item	Quantity	Description	Bezeichnung	Serie	K
1	11253394	1	REPAIR KIT	REPARATURSATZ		

1

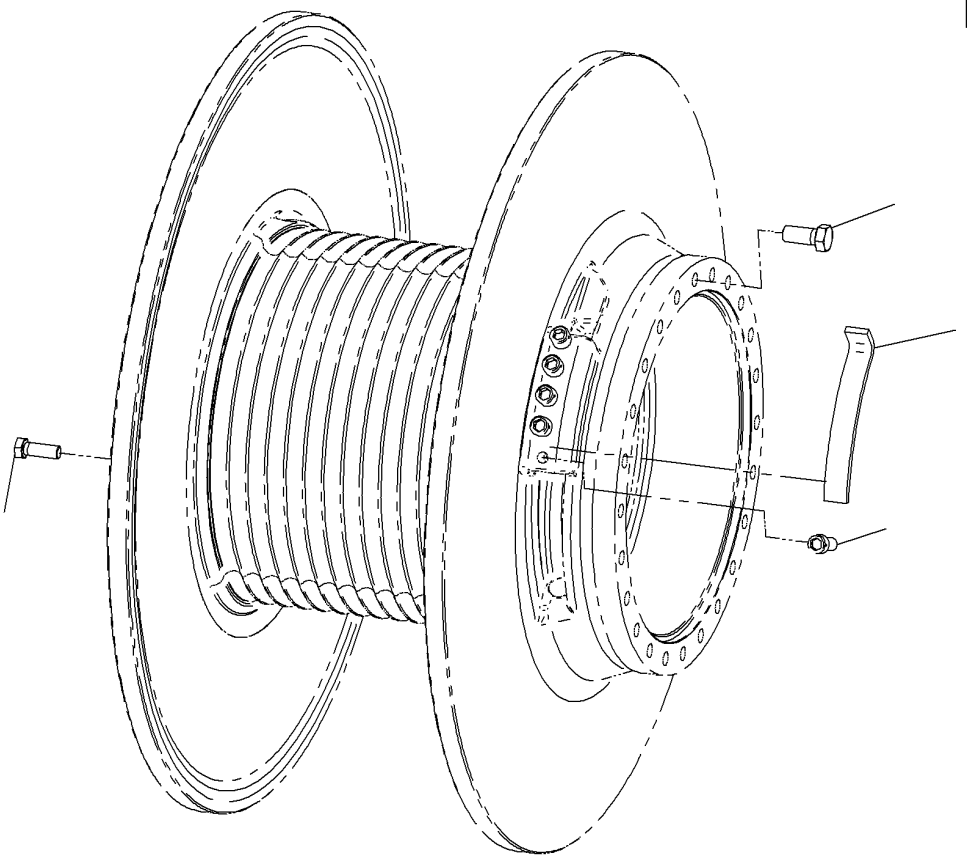

606704

Pos.	Item	Quantity	Description	Bezeichnung	Serie	K
1	11253398	1	REPAIR KIT	REPARATURSATZ		

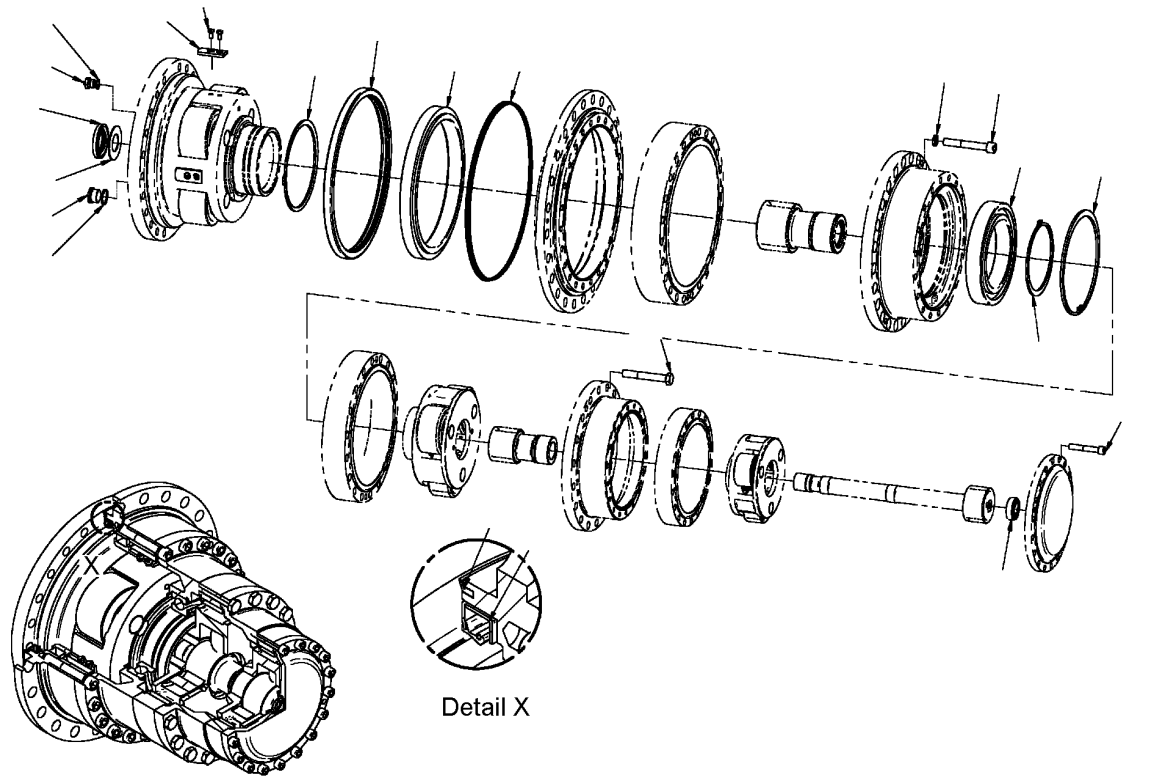

Pos.	Item	Quantity	Description	Bezeichnung	Serie	K
1	11253401	1	REPAIR KIT	REPARATURSATZ		

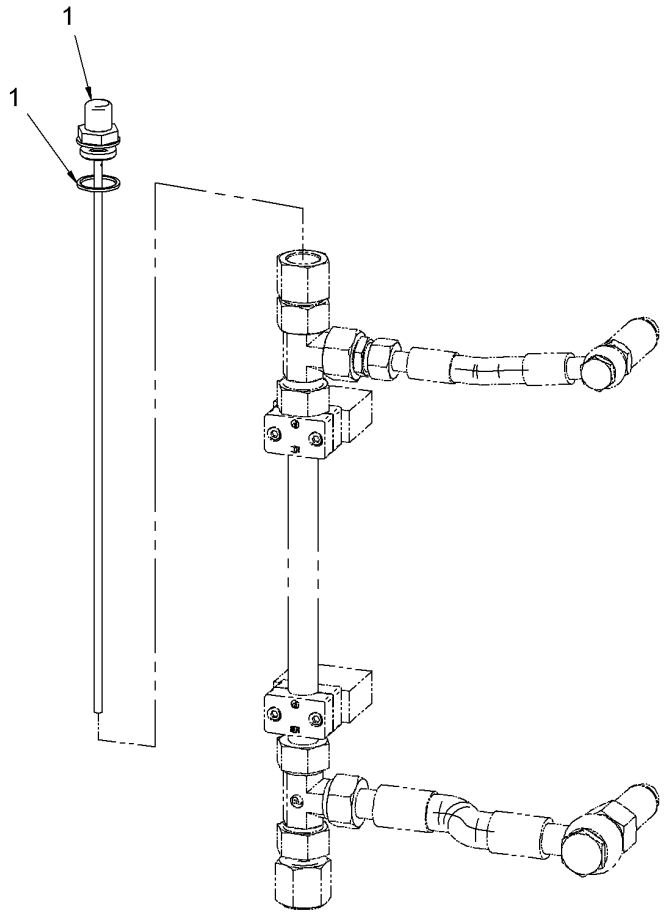

Pos.	Item	Quantity	Description	Bezeichnung	Serie	K
1	11253440	1	REPAIR KIT	REPARATURSATZ		

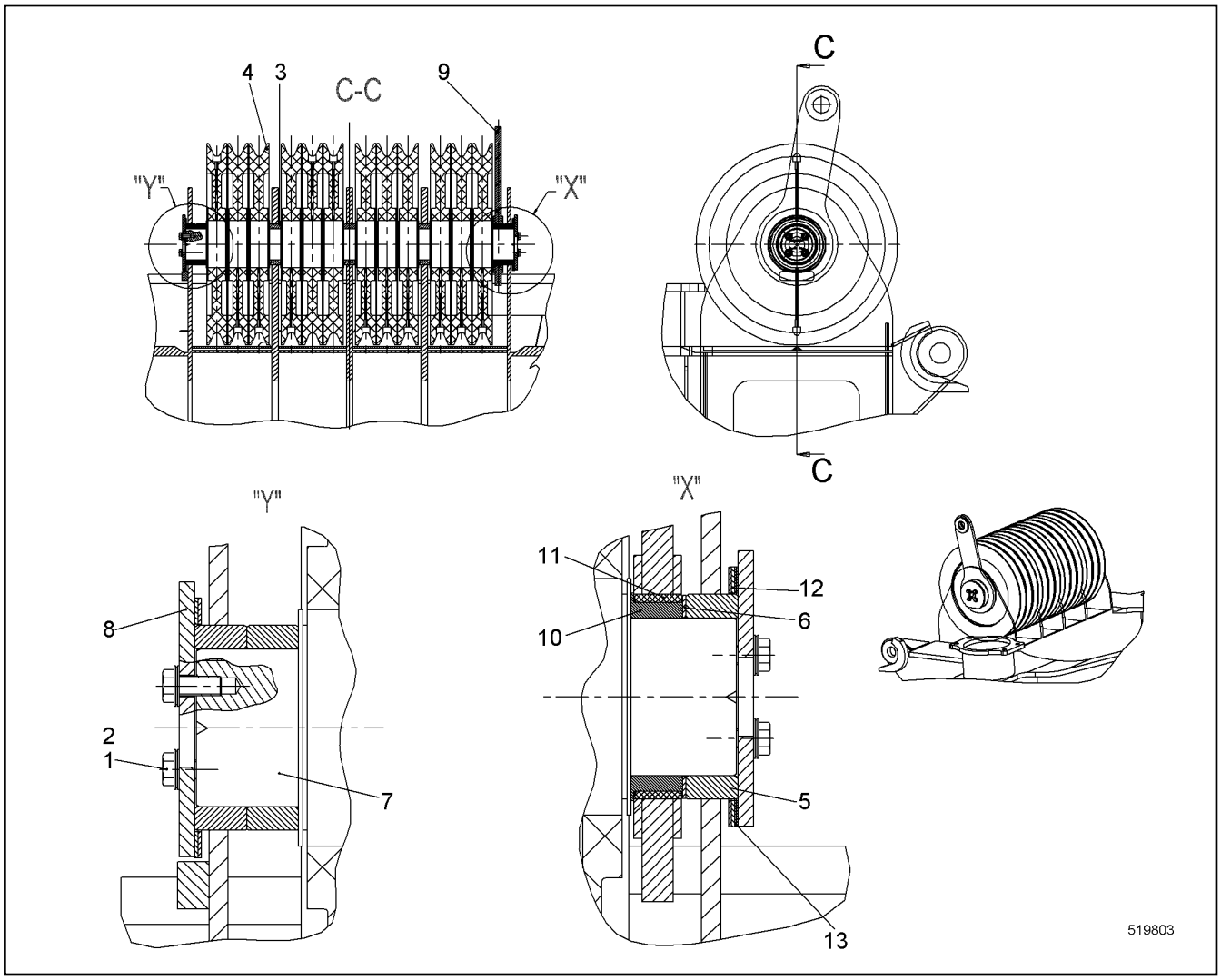

Pos.	Item	Quantity	Description	Bezeichnung	Serie	K
1	10536582	8	WEDGE LOCK WASHER M12 254 SMO;EN 10	KEILSICHERUNGSSCHEIBE		
2	406517314	8	HEX SCREW ISO 4017 M12X30 A4-70	SECHSKANTSCHRAUBE		
3	959869314	3	BUSHING 100/130X36 S770QL;EN 10210-2	BUCHSE		
4	914690714	12	ROPE PULLEY CPL	SEILROLLE KPL		
5	10336763	3	BUSHING 100/130X33 S770QL;EN 10210-2	BUCHSE		
6	385151114	1	WASHER 129/102X2 ST 12.03	SCHEIBE		
7	959866614	1	PIN	BOLZEN		
8	949196514	2	COVER	DECKEL		
9	970827603	1	ROPE FIXING POINT STRAP	LASCHE FIXPUNKT EINZIEHSEIL		
10	959001414	1	BUSHING	BUCHSE		
11	10223371	1	BUSHING 120X130X30 KUNSTSTOFF	BUCHSE		
12	949352914	4	WASHER 165/132X2 ST 12.03	SCHEIBE		
13	385123814	2	WASHER 165/132X1 ST 12.03	SCHEIBE		

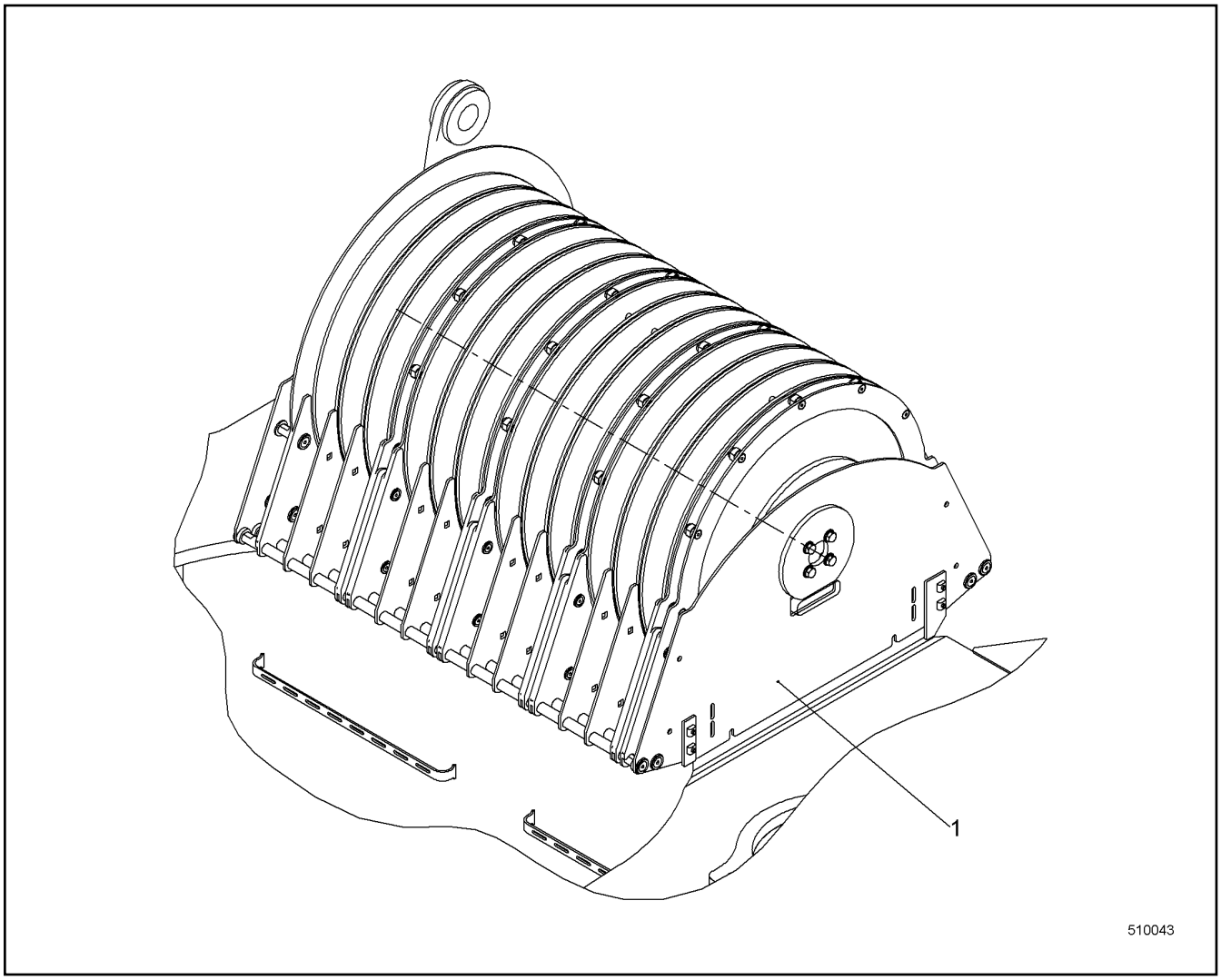

Pos.	Item	Quantity	Description	Bezeichnung	Serie	K
1	993353714	1	ROPE GUARD LUG CPL ⇨ ❑ 372	SEILSCHUTZ EZW KPL		

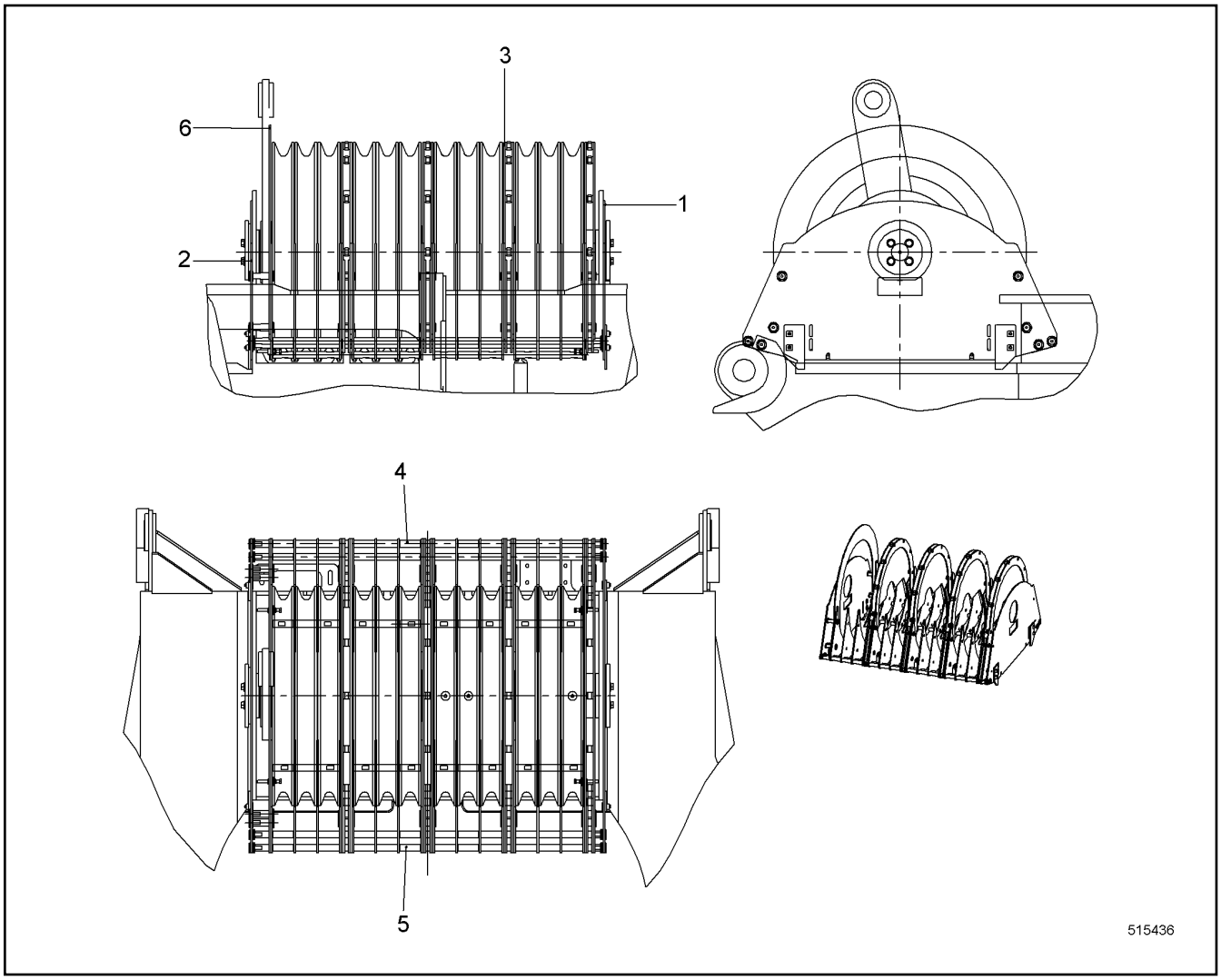

Pos.	Item	Quantity	Description	Bezeichnung	Serie	K
1	992938914	1	SIDE COMPONENT ⇨ ❑ 373	SEITENTEIL		
2	992939214	1	SIDE COMPONENT ⇨ ❑ 374	SEITENTEIL		
3	992938814	4	BRACKET CPL ⇨ ❑ 375	BUEGEL KPL		
4	992938614	1	BRACKET CPL ⇨ ❑ 376	KONSOLE KPL		
5	992943414	1	BRACKET CPL ⇨ ❑ 377	KONSOLE KPL		
6	10099010	1	BRACKET	BUEGEL		

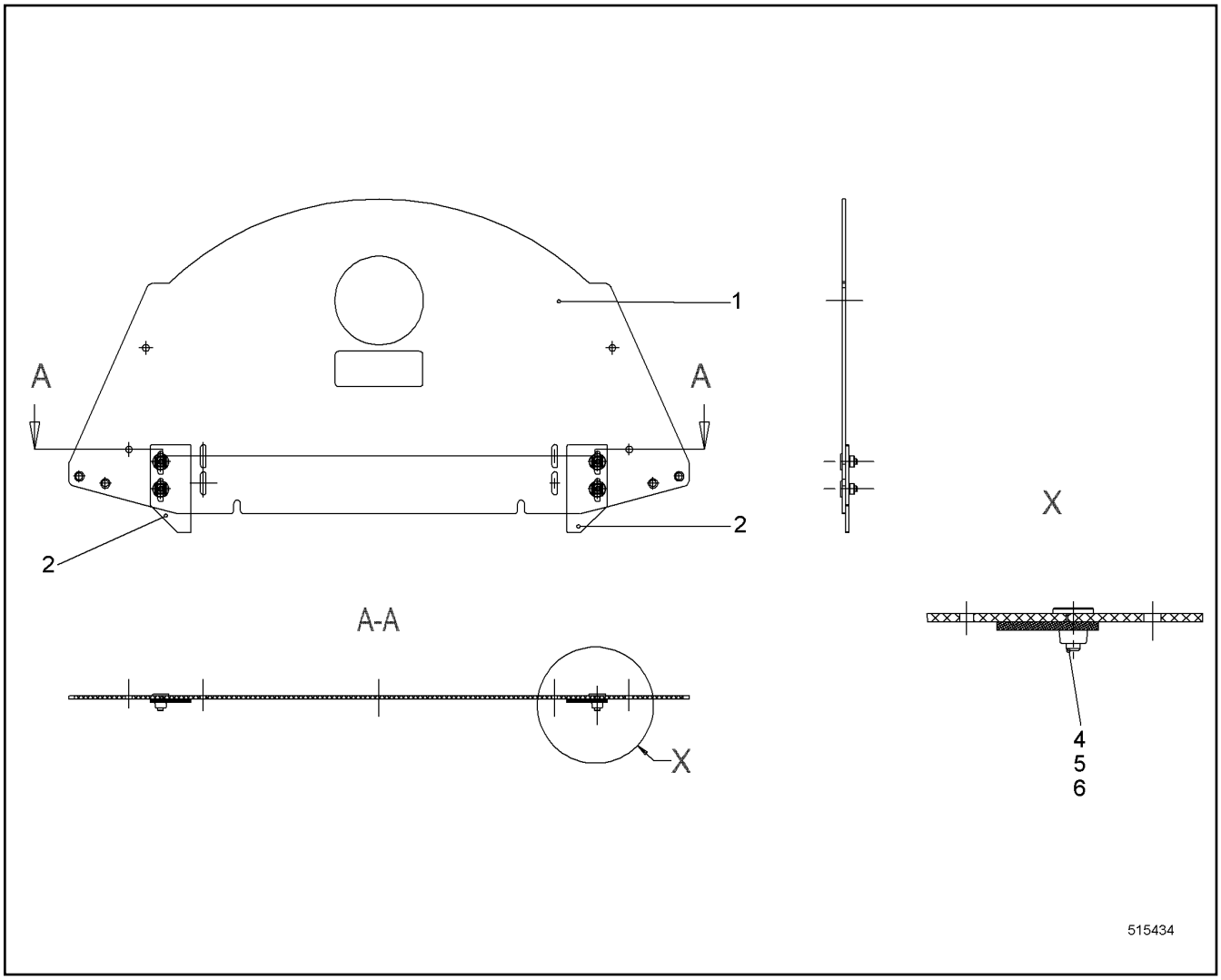

Pos.	Item	Quantity	Description	Bezeichnung	Serie	K
1	10099005	1	SHEET	PLATTE		
2	10336711	2	BRACKET	BUEGEL		
4	485550114	4	CAGE NUT M8-RR-123-47	KAEFIGMUTTER		
5	460022703	4	WASHER EN 14399-6 12 C45	SCHEIBE		
6	4002551	4	COUNTERSUNK SCREW DIN 7991 M8X25 8.8	SENKSCHRAUBE		

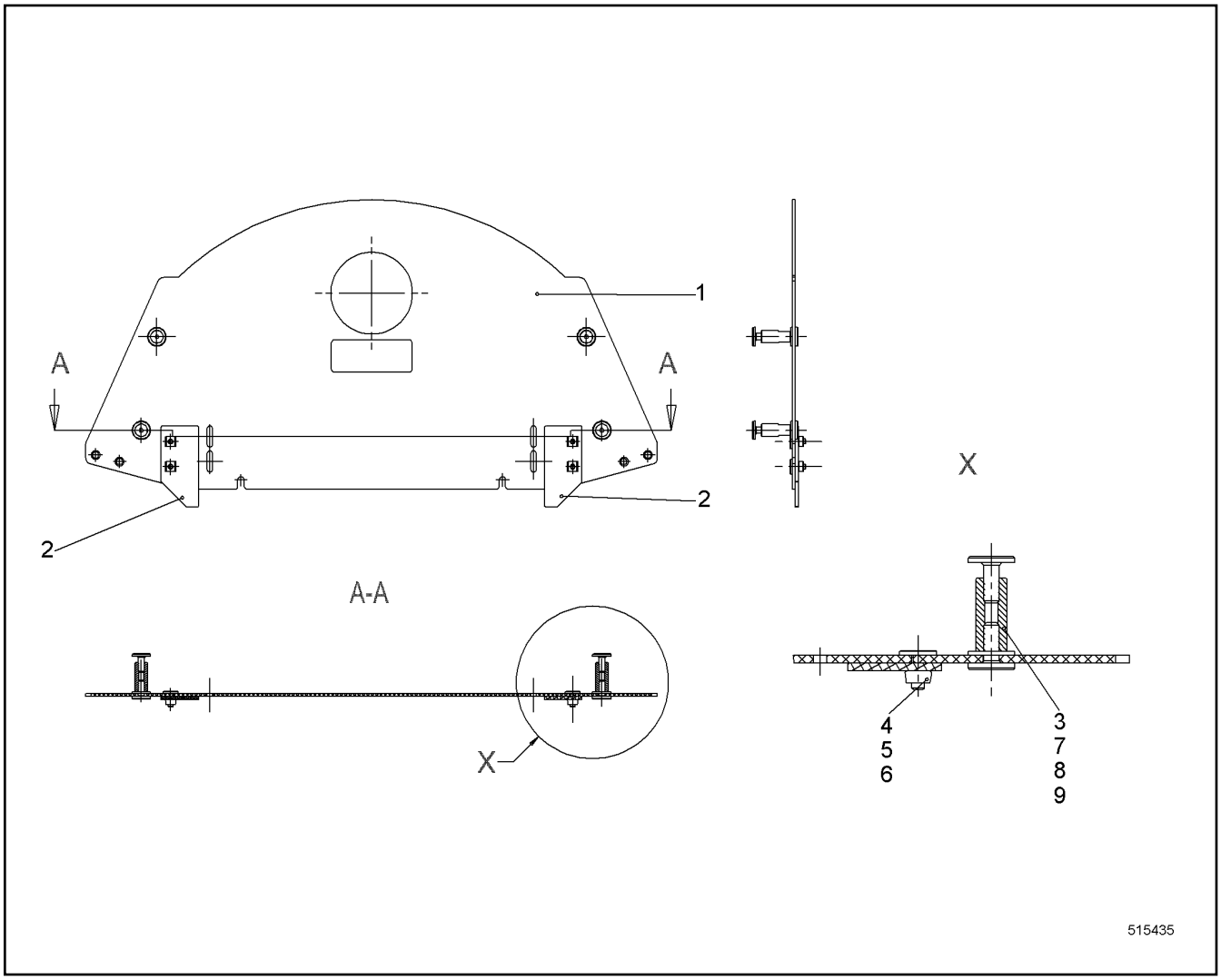

Pos.	Item	Quantity	Description	Bezeichnung	Serie	K
1	10099005	1	SHEET	PLATTE		
2	10336711	2	BRACKET	BUEGEL		
4	485550114	4	CAGE NUT M8-RR-123-47	KAEFIGMUTTER		
5	460022703	4	WASHER EN 14399-6 12 C45	SCHEIBE		
6	4002551	4	COUNTERSUNK SCREW DIN 7991 M8X25 8.8	SENKSCHRAUBE		
7	4600170	8	COUNTERSUNK SCREW DIN 7991 M10X30 8.8	SENKSCHRAUBE		
8	460024203	8	WASHER DIN 6916 17 C45	SCHEIBE		
9	485568514	4	WASHER DIN 34816 10.5 PA 6.6	SCHEIBE		

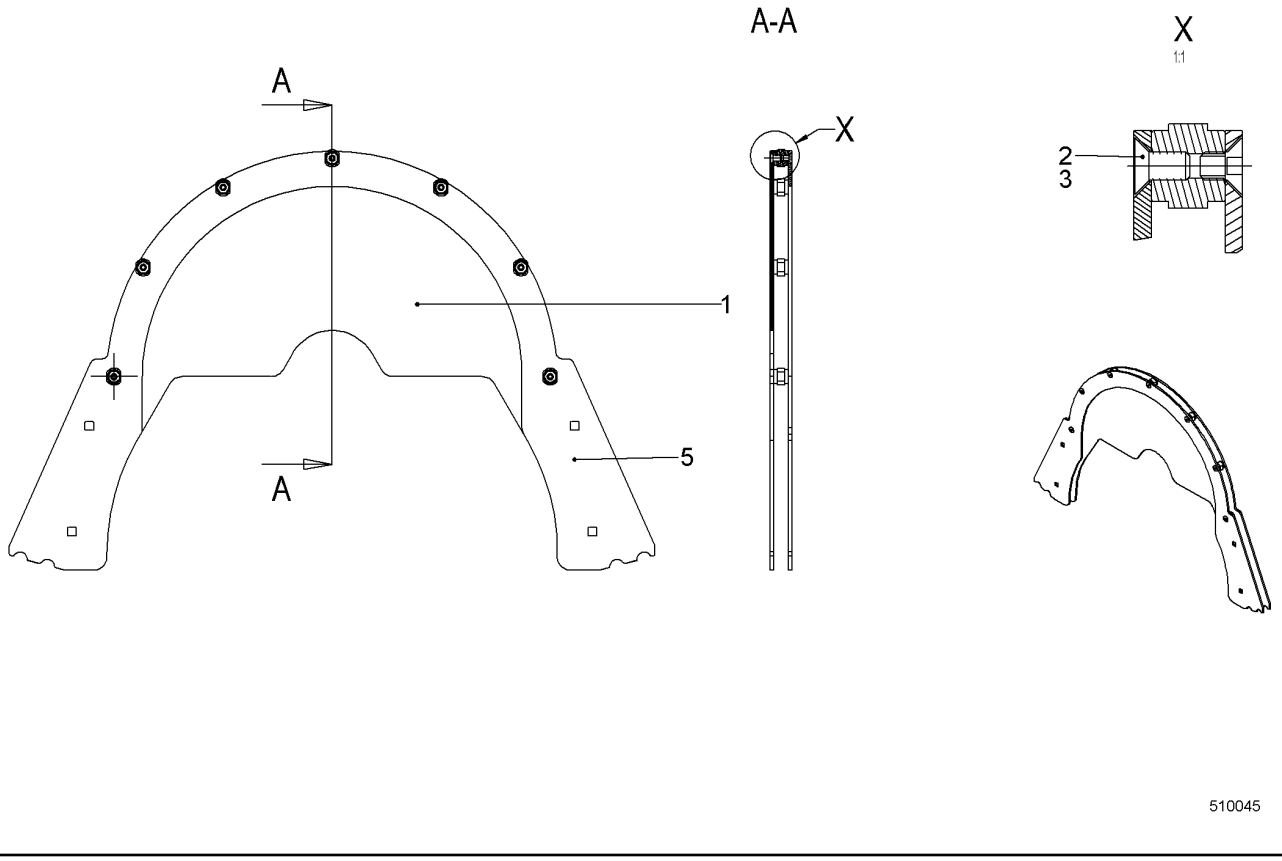

Pos.	Item	Quantity	Description	Bezeichnung	Serie	K
1	10336709	1	BRACKET	BUEGEL		
3	4001205	7	COUNTERSUNK SCREW DIN 7991 M8X16 8.8	SENKSCHRAUBE		
4	4600257	7	COUNTERSUNK SCREW DIN 7991 M8X12 8.8	SENKSCHRAUBE		
5	10099007	1	BRACKET	BUEGEL		

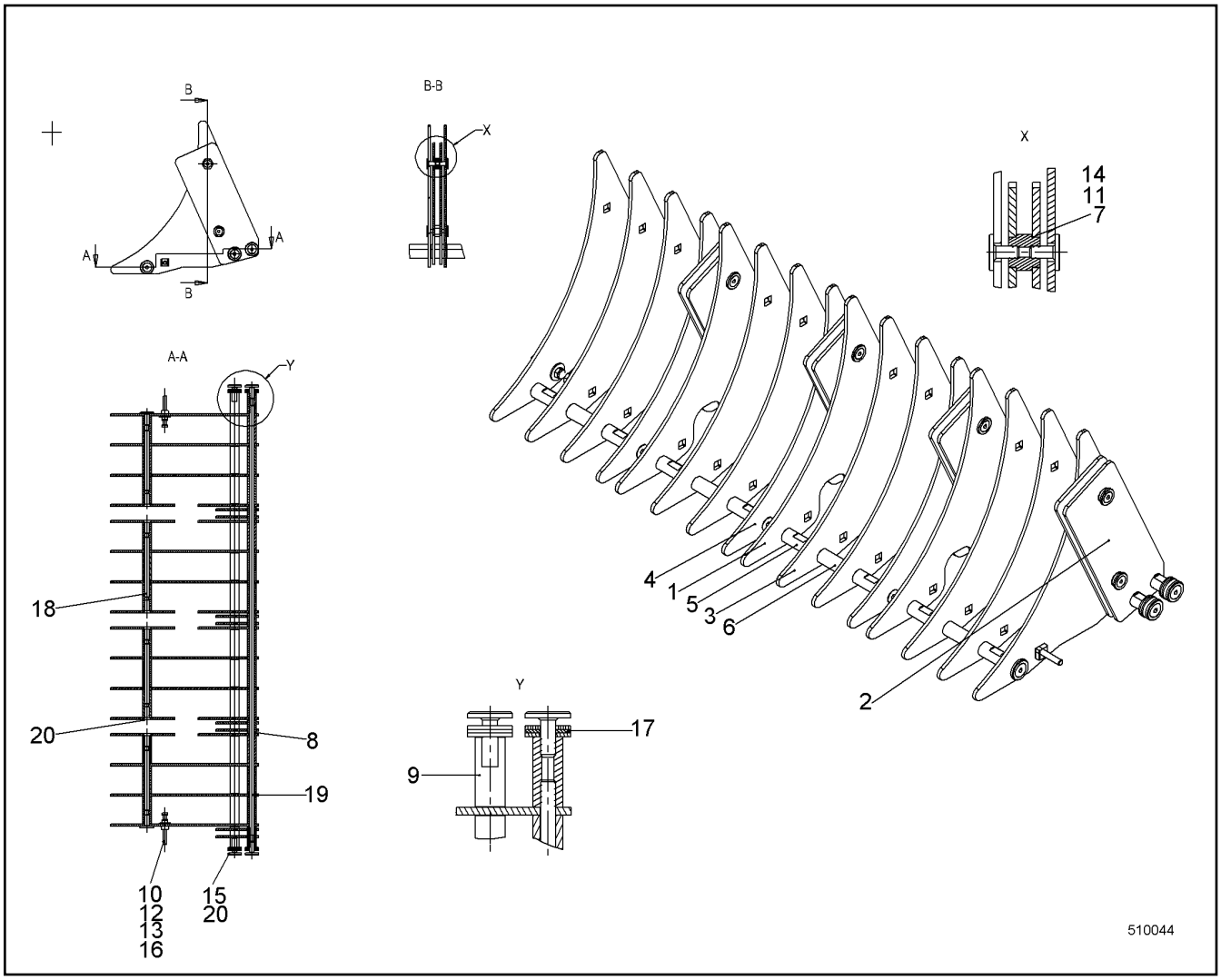

Pos.	Item	Quantity	Description	Bezeichnung	Serie	K
1	10336707	3	SHEET	PLATTE		
2	10336708	8	SHEET	PLATTE		
3	10099009	10	SHEET	PLATTE		
4	10336722	3	SHEET	PLATTE		
10	10331507	2	HEX SCREW ISO 4017 M8X65 A4-70	SECHSKANTSCHRAUBE		
11	4600157	16	COUNTERSUNK SCREW DIN 7991 M8X20 8.8;	SENKSCHRAUBE		
12	10540510	2	WASHER ISO 7093-1 8 A4	SCHEIBE		
13	10540493	2	HEX NUT ISO 10511 M8 A4	SECHSKANTMUTTER		
14	460022703	16	WASHER EN 14399-6 12 C45	SCHEIBE		
15	460024203	6	WASHER DIN 6916 17 C45	SCHEIBE		
16	485550114	2	CAGE NUT M8-RR-123-47	KAEFIGMUTTER		
17	485568514	12	WASHER DIN 34816 10.5 PA 6.6	SCHEIBE		
20	4600170	12	COUNTERSUNK SCREW DIN 7991 M10X30 8.8	SENKSCHRAUBE		

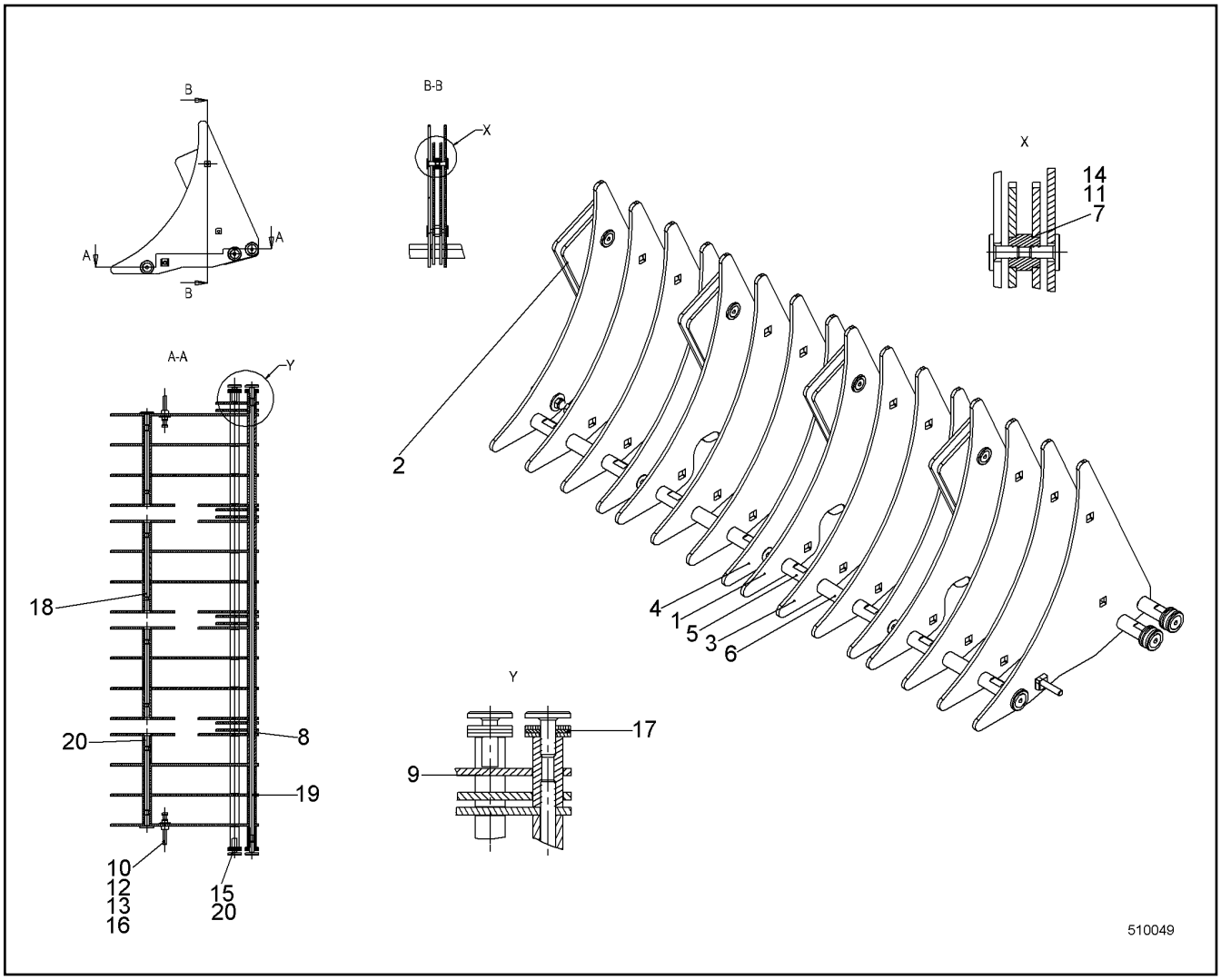

Pos.	Item	Quantity	Description	Bezeichnung	Serie	K
1	10336707	3	SHEET	PLATTE		
2	10336708	8	SHEET	PLATTE		
3	10099009	10	SHEET	PLATTE		
4	10336722	3	SHEET	PLATTE		
10	10331507	2	HEX SCREW ISO 4017 M8X65 A4-70	SECHSKANTSCHRAUBE		
11	4600157	16	COUNTERSUNK SCREW DIN 7991 M8X20 8.8;	SENKSCHRAUBE		
12	10540510	2	WASHER ISO 7093-1 8 A4	SCHEIBE		
13	10540493	2	HEX NUT ISO 10511 M8 A4	SECHSKANTMUTTER		
14	460022703	16	WASHER EN 14399-6 12 C45	SCHEIBE		
15	460024203	6	WASHER DIN 6916 17 C45	SCHEIBE		
16	485550114	2	CAGE NUT M8-RR-123-47	KAEFIGMUTTER		
17	485568514	12	WASHER DIN 34816 10.5 PA 6.6	SCHEIBE		
20	4600170	12	COUNTERSUNK SCREW DIN 7991 M10X30 8.8	SENKSCHRAUBE		

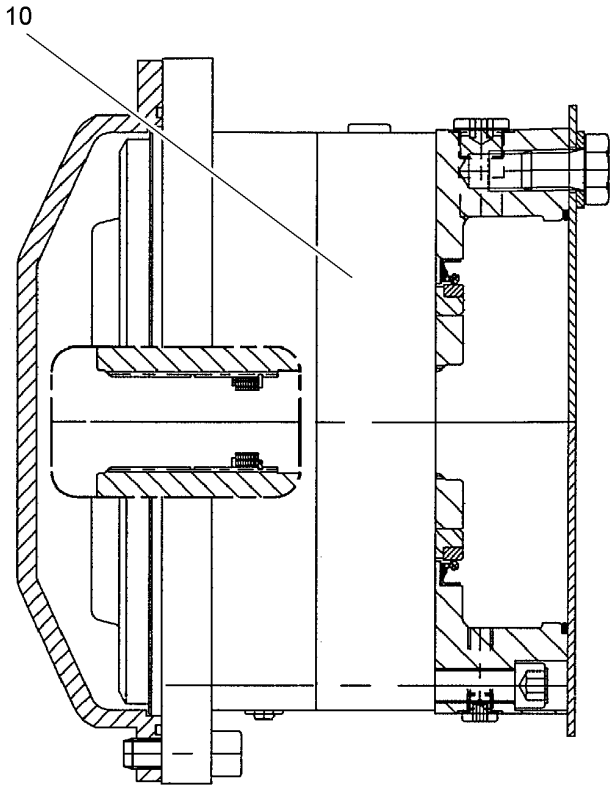

506837

Pos.	Item	Quantity	Description	Bezeichnung	Serie	K
10	990464514	1	DRIVE ⇨ ❑ 379	ANTRIEB		

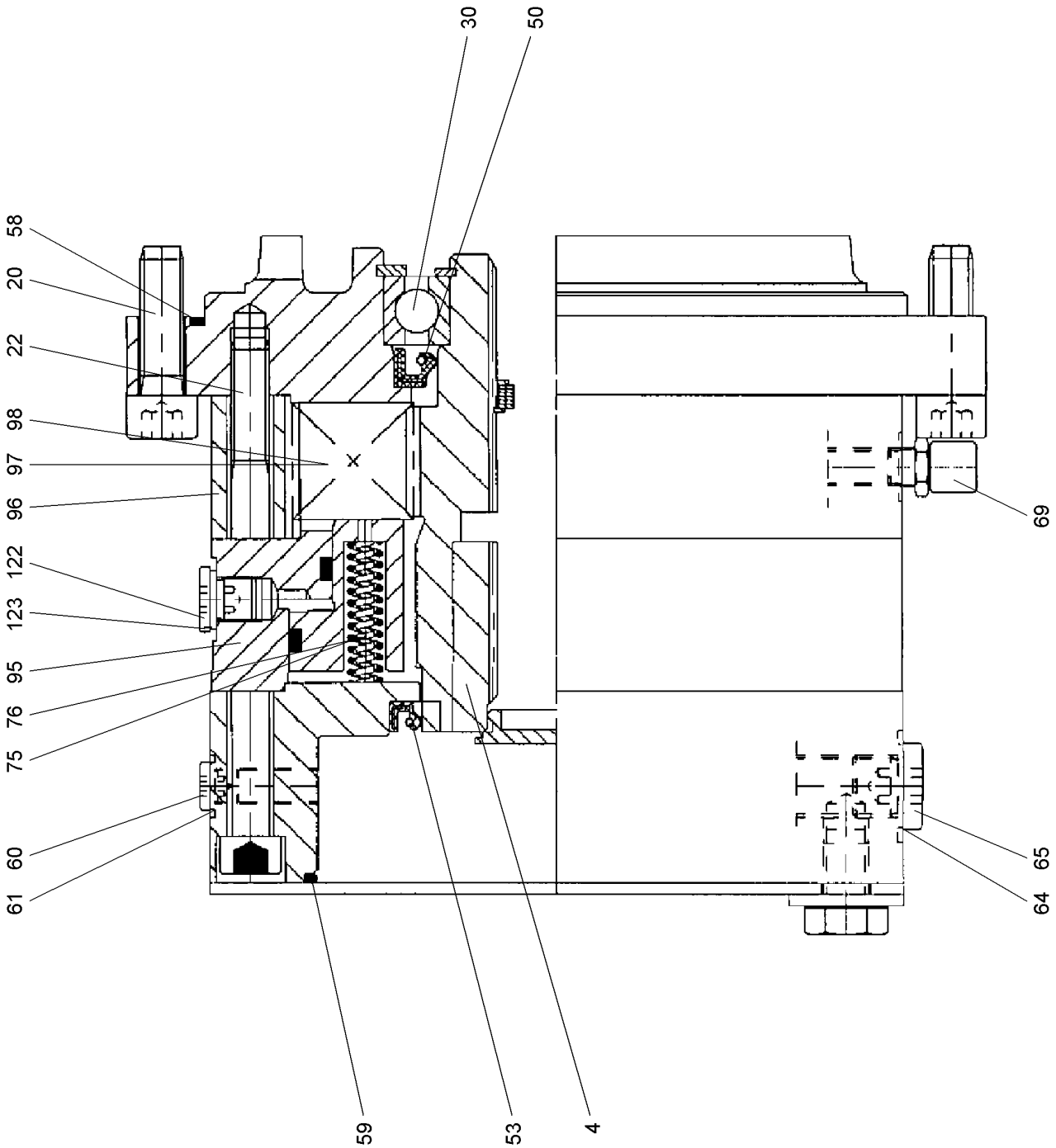
30
50
58
20
22
98
97
96
122
123
95
76
75
60
61
69
65
64
59
53
4
604840

Pos.	Item	Quantity	Description	Bezeichnung	Serie	K
4	11223233	1	DRIVE SLEEVE	ANTRIEBSHUELSE		
20	10337130	8	SOCKET HEAD SCREW ISO 4762 M12X40 A4-7	ZYLINDERSCHRAUBE		
22	10539530	12	SOCKET HEAD SCREW ISO 4762 M12X140 A4	ZYLINDERSCHRAUBE		
30	10592555	1	DEEP GROOVE BALL BEARING	RILLENKUGELLAGER		
50	11950210	1	SHAFT SEAL	WELLENDICHTRING		
53	11950212	1	ROTARY SHAFT LIP SEAL	RADIALWELLENDICHTRING		
58	726456214	1	O-RING	O-RING		
59	10548553	1	O-RING	O-RING		
60	502027614	2	SCREW PLUG DIN 908 M10X1 ST	VERSCHLUSSSCHRAUBE		
61	790295414	2	SEALING RING	DICHTRING		
64	4600320	1	SCREW PLUG DIN 908 M18X1.5 5.8	VERSCHLUSSSCHRAUBE		
65	790444514	1	SEALING RING	DICHTRING		
69	592089814	1	VENTILATION VALVE	ENTLUEFTUNGSVENTIL		
75	11305568	16	PRESSURE SPRING	DRUCKFEDER		
76	11305579	16	PRESSURE SPRING	DRUCKFEDER		
95	592054714	1	ACTUATING UNIT	BETAETIGUNGSEINHEIT		
96	501559414	1	MULTI-DISC CARRIER	LAMELLENTRAEGER		
97	501540414	8	OUTER MULTI-DISC	AUSSENLAMELLE		
98	501540514	7	INTERNAL MULTI-DISC	INNENLAMELLE		
122	502027514	1	SCREW PLUG DIN 908 M12X1.5	VERSCHLUSSSCHRAUBE		
123	710121014	1	SEALING RING	DICHTRING		

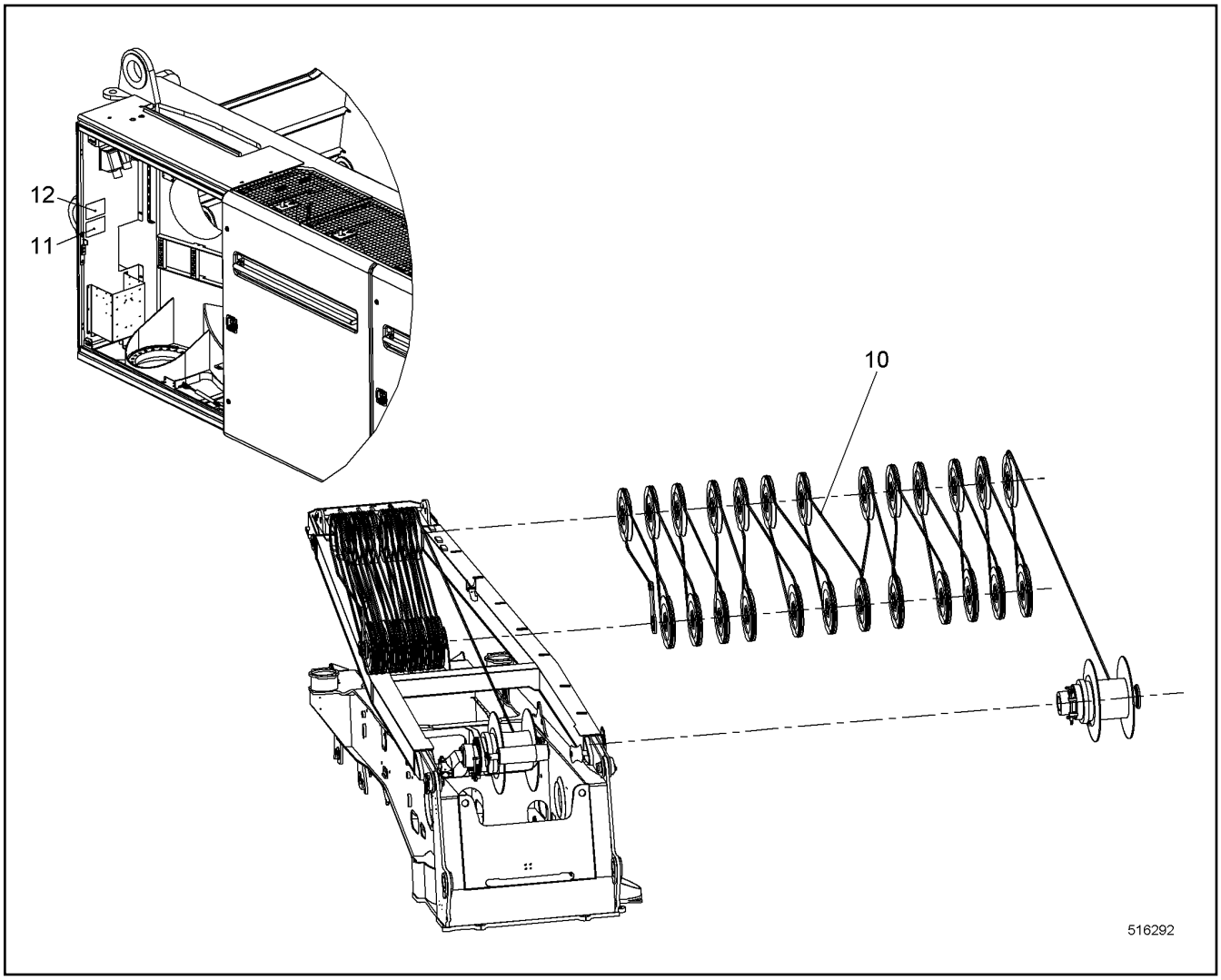

Pos.	Item	Quantity	Description	Bezeichnung	Serie	K
10	11227045	1	ROPE LEFT	SEIL LI		
11	11227046	1	SIGN	SCHILD		
12	10533589	1	SIGN	SCHILD		

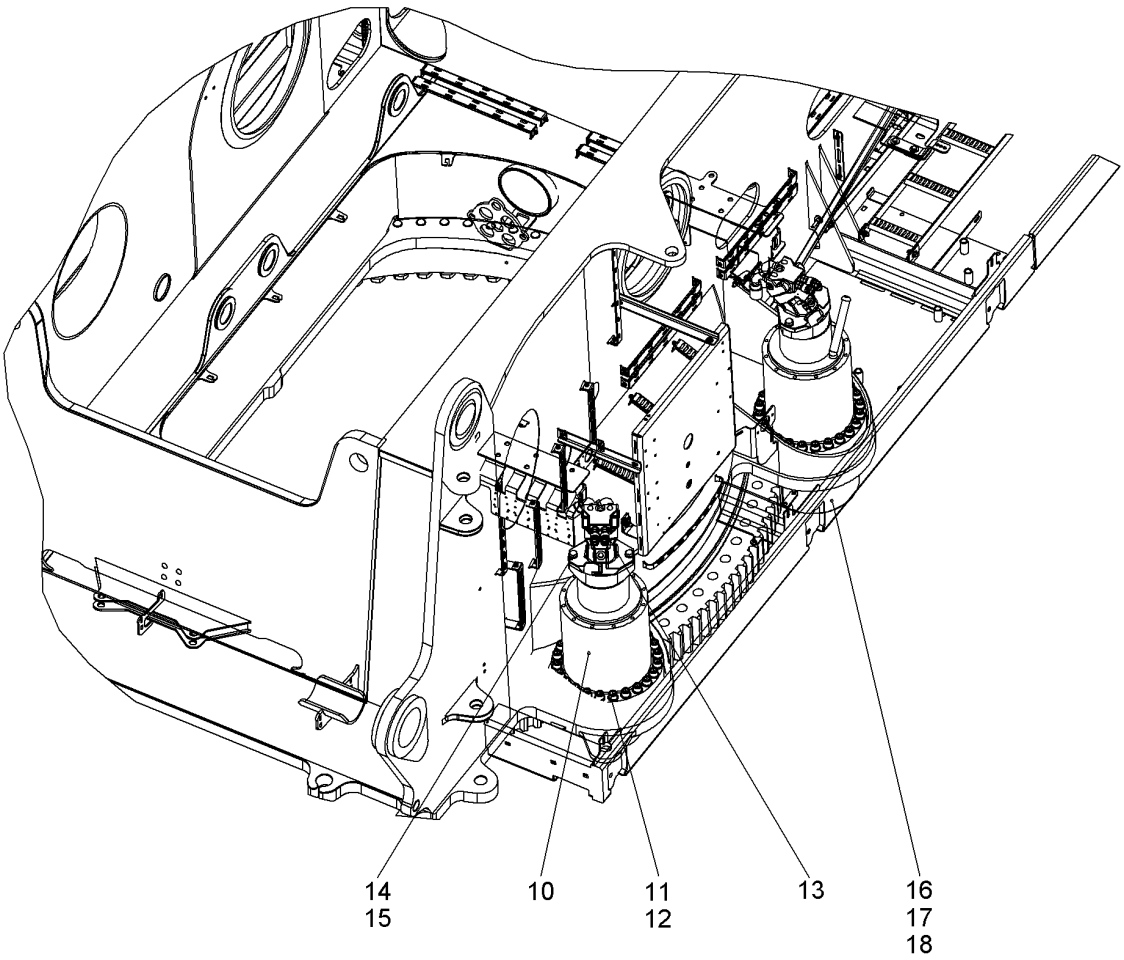

Pos.	Item	Quantity	Description	Bezeichnung	Serie	K
2	10519683	1	SG HYDR ⇨ ❑ 383	DW HYDR		
4	10561780	1	HOSE LIST ⇨ ❑ 394	SCHLAUCHLISTE		
10	90013762	2	SLEWING GEAR DRIVE ⇨ ❑ 395	DREHWERKANTRIEB		
11	460022203	48	WASHER DIN 6916 21 C45	SCHEIBE		
12	10544105	48	SOCKET HEAD SCREW ISO 4762 M20X130 10.	ZYLINDERSCHRAUBE		
14	10544172	4	WASHER ISO 7089 16	SCHEIBE		
15	10543902	4	HEX SCREW ISO 4017 M16X45 10.9	SECHSKANTSCHRAUBE		
16	10099140	2	PINION GUARD	RITZELSCHUTZ		
17	420001014	6	WASHER ISO 7089 8 A4	SCHEIBE		
18	406501514	6	HEX SCREW ISO 4017 M8X16 A4-70	SECHSKANTSCHRAUBE		

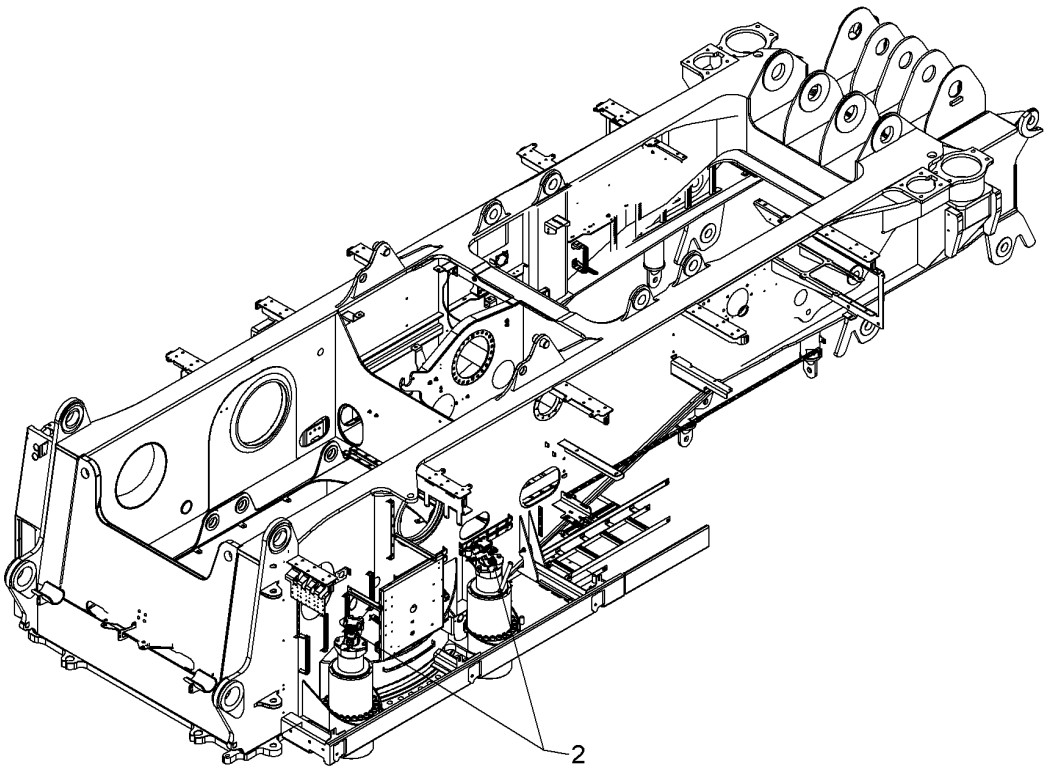

Pos.	Item	Quantity	Description	Bezeichnung	Serie	K
2	10552161	1	TUBING HYDR ⇨ ❑ 384	VERROHRUNG HYDR		

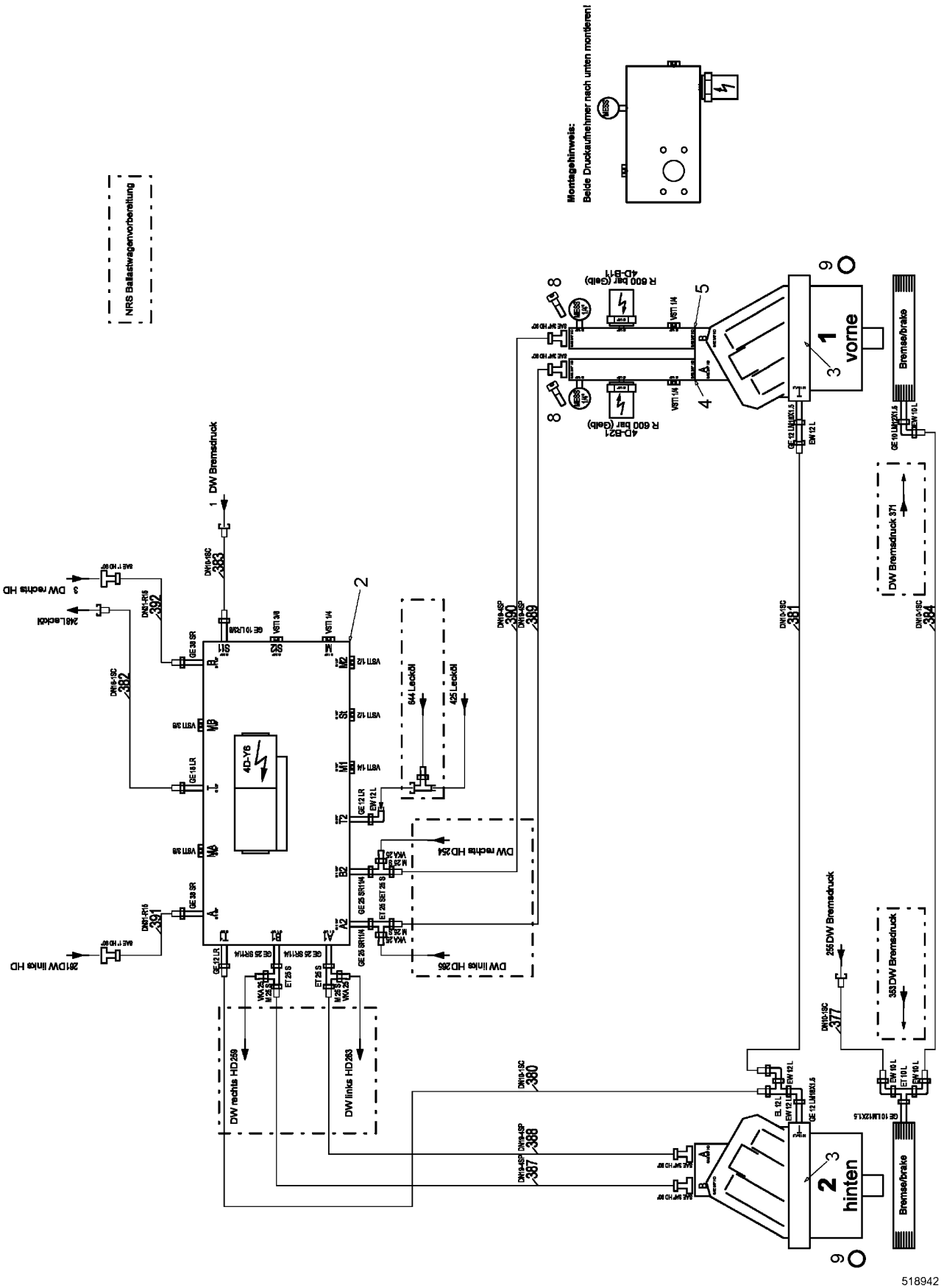

24.5.2017 518942 LIEBHERR	**138376_ETK_001** **TUBING HYDR** **VERROHRUNG HYDR**	❑ 384 (1/2) **10 55 216 1**

Pos.	Item	Quantity	Description	Bezeichnung	Serie	K
2	511434714	1	SG SAFETY BLOCK ⇨ ❑ 386	DW SICHERUNGSBLOCK		
3	512299114	2	OIL MOTOR ⇨ ❑ 388	OELMOTOR		
6	4001246	16	HEX SCREW ISO 4017 M10X35 10.9	SECHSKANTSCHRAUBE		
7	4600366	8	HEX SCREW ISO 4017 M12X40 10.9	SECHSKANTSCHRAUBE		
8	4630200	8	SOCKET HEAD SCREW ISO 4762 M10X65 10.9	ZYLINDERSCHRAUBE		
9	726461714	2	O-RING	O-RING		
200	7409720	2	GAUGE CONNECTION	MESSSTUTZEN		
201	482430314	1	FITTING	VERSCHRAUBUNG		
202	7403569	3	FITTING	VERSCHRAUBUNG		
203	510694514	2	GAUGE CONNECTION	MESSSTUTZEN		
204	247117702	4	FITTING	VERSCHRAUBUNG		
600	247117302	4	FITTING	VERSCHRAUBUNG		
602	247128602	1	FITTING	VERSCHRAUBUNG		
603	247112702	2	FITTING	VERSCHRAUBUNG		
604	247009702	1	FITTING	VERSCHRAUBUNG		
605	247009402	2	FITTING	VERSCHRAUBUNG		
608	247128402	4	FITTING	VERSCHRAUBUNG		
611	471039408	2	FITTING	VERSCHRAUBUNG		
612	471034414	2	FITTING	VERSCHRAUBUNG		
618	471039708	2	FITTING	VERSCHRAUBUNG		
619	471007014	1	FITTING	VERSCHRAUBUNG		
620	10597776	4	FITTING	VERSCHRAUBUNG		
623	482431714	4	FITTING	VERSCHRAUBUNG		
624	477400814	4	FITTING	VERSCHRAUBUNG		
625	477701514	4	FITTING	VERSCHRAUBUNG		
630	510586914	4	FLANGE HALF	FLANSCHHAELFTE		
631	510587514	8	FLANGE HALF	FLANSCHHAELFTE		
640	10490784	4	RECTANGULAR SECTION RING	RECHTECKRING		
641	10490781	2	RECTANGULAR SECTION RING	RECHTECKRING		

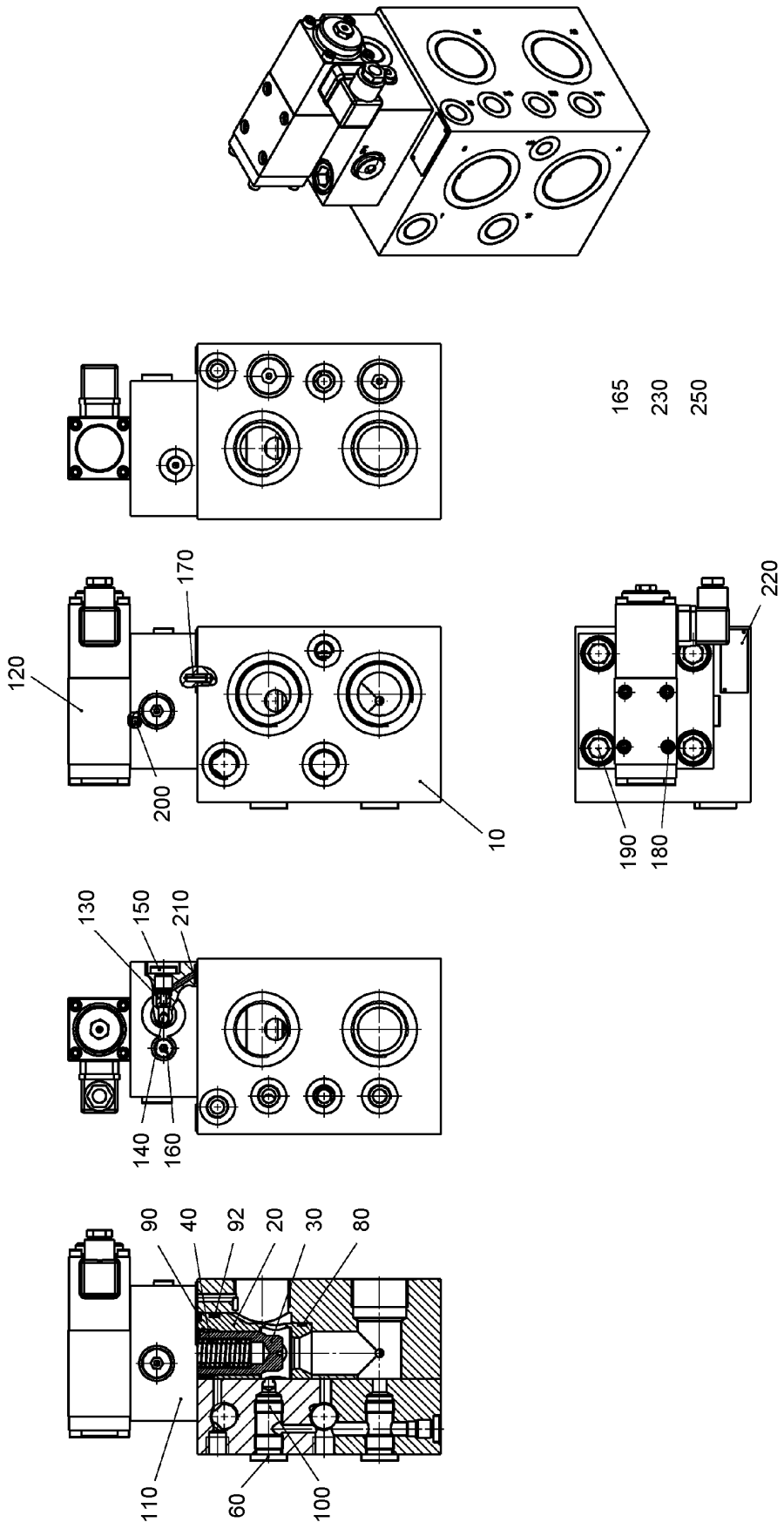
165
230
250
170
120
200
10
220
190
180
130
150
210
140
160
90
40
92
20
30
80
110
60
100
606149

Pos.	Item	Quantity	Description	Bezeichnung	Serie	K
10	11226015	1	BLOCK	BLOCK		
20	11226016	1	SLEEVE NG32/RD60/23X85	HUELSE		
30	11226017	1	PISTON	KOLBEN		
40	11226019	1	PRESSURE SPRING	DRUCKFEDER		
60	11226023	2	SCREW PLUG G1/2"-ED	VERSCHLUSSSCHRAUBE		
80	11226035	1	SEALING RING	DICHTRING		
90	11226084	1	O-RING	O-RING		
92	11226086	1	SEALING RING	DICHTRING		
100	11226088	2	CHECK VALVE	SPERRVENTIL		
110	11226090	1	COVER	DECKEL		
120	10336968	1	SOLENOID VALVE	MAGNETVENTIL		
130	11226118	1	SEAT	SITZ		
140	11226127	1	STEEL BALL	STAHLKUGEL		
150	11226129	1	SCREW PLUG G1/4"-ED	VERSCHLUSSSCHRAUBE		
160	11226130	1	SCREW PLUG G1/8"-ED	VERSCHLUSSSCHRAUBE		
165	11226133	1	SCREW PLUG G3/8"-ED	VERSCHLUSSSCHRAUBE		
170	11226135	1	DOWEL PIN DIN 1481 5X16 ST	SPANNSTIFT		
180	11226137	4	SOCKET HEAD SCREW DIN 912 M5X45 8.8	ZYLINDERSCHRAUBE		
190	11226139	4	SOCKET HEAD SCREW DIN 912 M16X60 8.8	ZYLINDERSCHRAUBE		
200	11226142	1	NOZZLE	DUESE		
210	11226144	4	O-RING	O-RING		
220	11226148	1	TYPE PLATE	TYPENSCHILD		
230	10540182	1	DIRECTIONAL CONTROL VALVE	WEGEVENTIL		
250	512256614	1	SEALING SET CPL	DS KPL		

OHNE BILD
WITHOUT ILLUSTRATION
SANS PLANCHE
SIN FIG.
SEM ILUSTRAÇÃO
БЕЗ ИЗОБРАЖЕНИЯ

600000

Pos.	Item	Quantity	Description	Bezeichnung	Serie	K
1	7023828	1	DRIVING GEAR ⇨ ❑ 389	TRIEBWERK		
4	11940146	1	CONNECTING PLATE	ANSCHLUSSPLATTE		
5	11903905	1	PARALLEL PIN	ZYLINDERSTIFT		
6	11940147	1	O-RING	O-RING		
7	404208514	6	SOCKET HEAD SCREW ISO 4762 M10X25 A4-7	ZYLINDERSCHRAUBE		
31	10650270	1	CLOSING RING ⇨ ❑ 392	VERSCHLUSSRING		
905	7023847	14	STEEL GASKET	STAHLDICHTRING		
990	512299214	1	SEALING SET CPL	DS KPL		

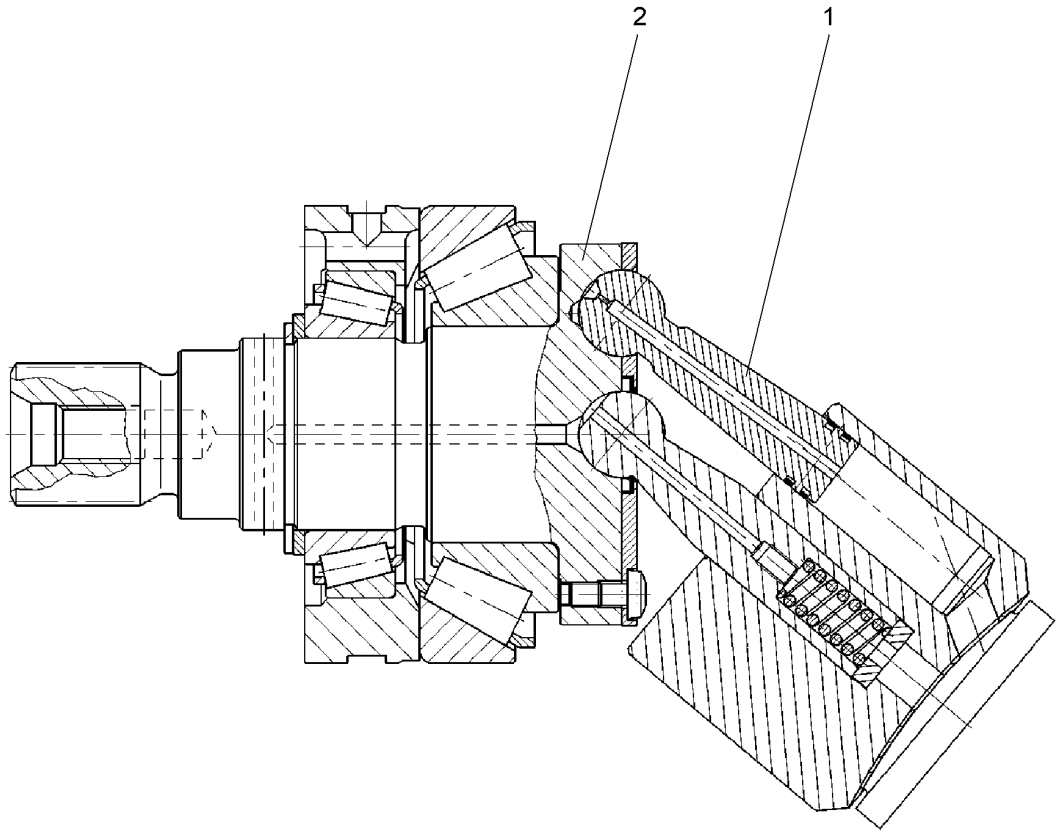

Pos.	Item	Quantity	Description	Bezeichnung	Serie	K
1	11940176	1	HYDRAULIC PARTS DRIVING GEAR ⇨ ❑ 390	TRIEBWERK HYDRAULIKTEIL		
2	11940177	1	DRIVING SHAFT ⇨ ❑ 391	TRIEBWELLE		

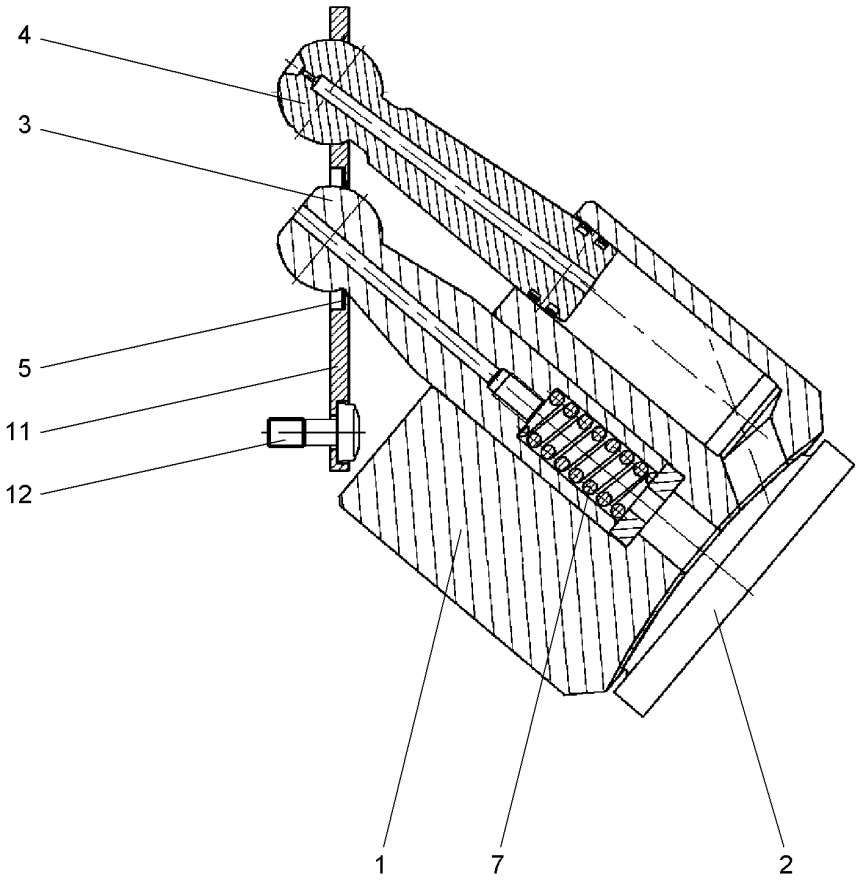

Pos.	Item	Quantity	Description	Bezeichnung	Serie	K
1	7023838	1	CYLINDER	ZYLINDER		
2	7023839	1	GUIDE PLATE	STEUERPLATTE		
3	11940182	1	CENTER STUD	MITTELZAPFEN		
4	11940198	7	PISTON WITH PISTON RINGS	KOLBEN M. KOLBENRINGEN		
5	7023834	1	WASHER	SCHEIBE		
7	11940199	1	PRESSURE SPRING	DRUCKFEDER		
11	7023835	1	PULL-BACK PLATE	RUECKZUGPLATTE		
12	11940203	7	PAN-HEAD SCREW	FLACHKOPFSCHRAUBE		

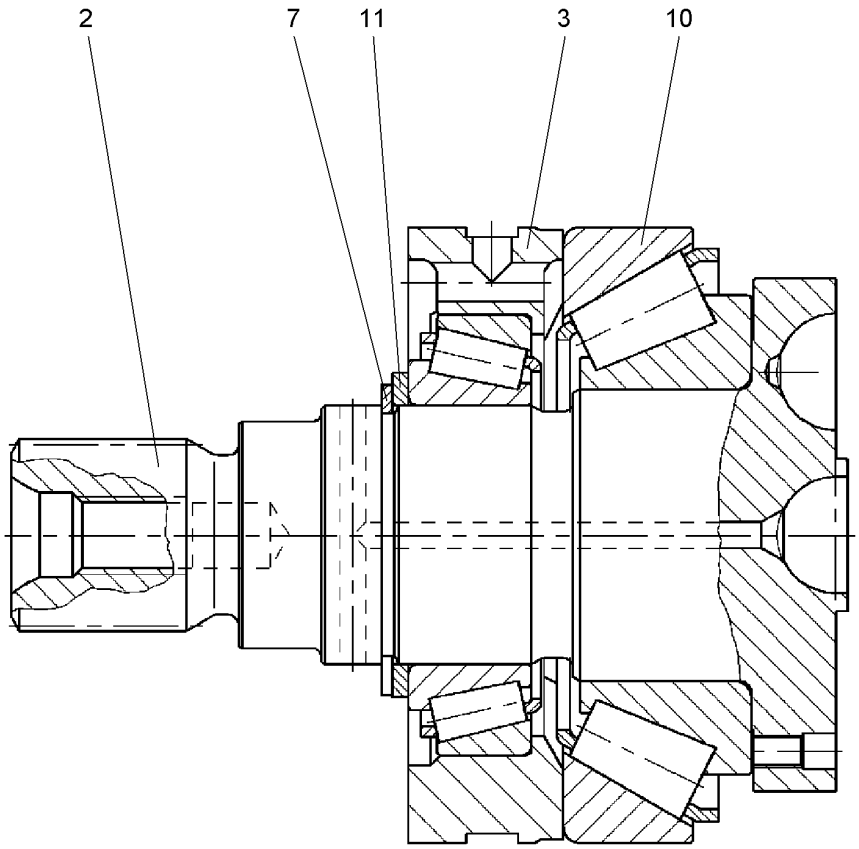

Pos.	Item	Quantity	Description	Bezeichnung	Serie	K
2	11940205	1	DRIVING SHAFT	TRIEBWELLE		
3	7023833	1	BEARING RING	LAGERRING		
7	10216718	1	LOCKING RING	SICHERUNGSRING		
10	7023837	1	TAPERED ROLLER BEARING	KEGELROLLENLAGER		
11	11940207	1	TAPERED ROLLER BEARING	KEGELROLLENLAGER		

OHNE BILD
WITHOUT ILLUSTRATION
SANS PLANCHE
SIN FIG.
SEM ILUSTRAÇÃO
БЕЗ ИЗОБРАЖЕНИЯ

600000

Pos.	Item	Quantity	Description	Bezeichnung	Serie	K
1	11940208	1	CLOSING RING ⇨ ❑ 393	VERSCHLUSSRING		
2	10424724	1	LOCKING RING DIN 471	SICHERUNGSRING		
3	7372232	1	O-RING	O-RING		
4	10475718	1	SHIM RING 70X95X0.5	PASSSCHEIBE		

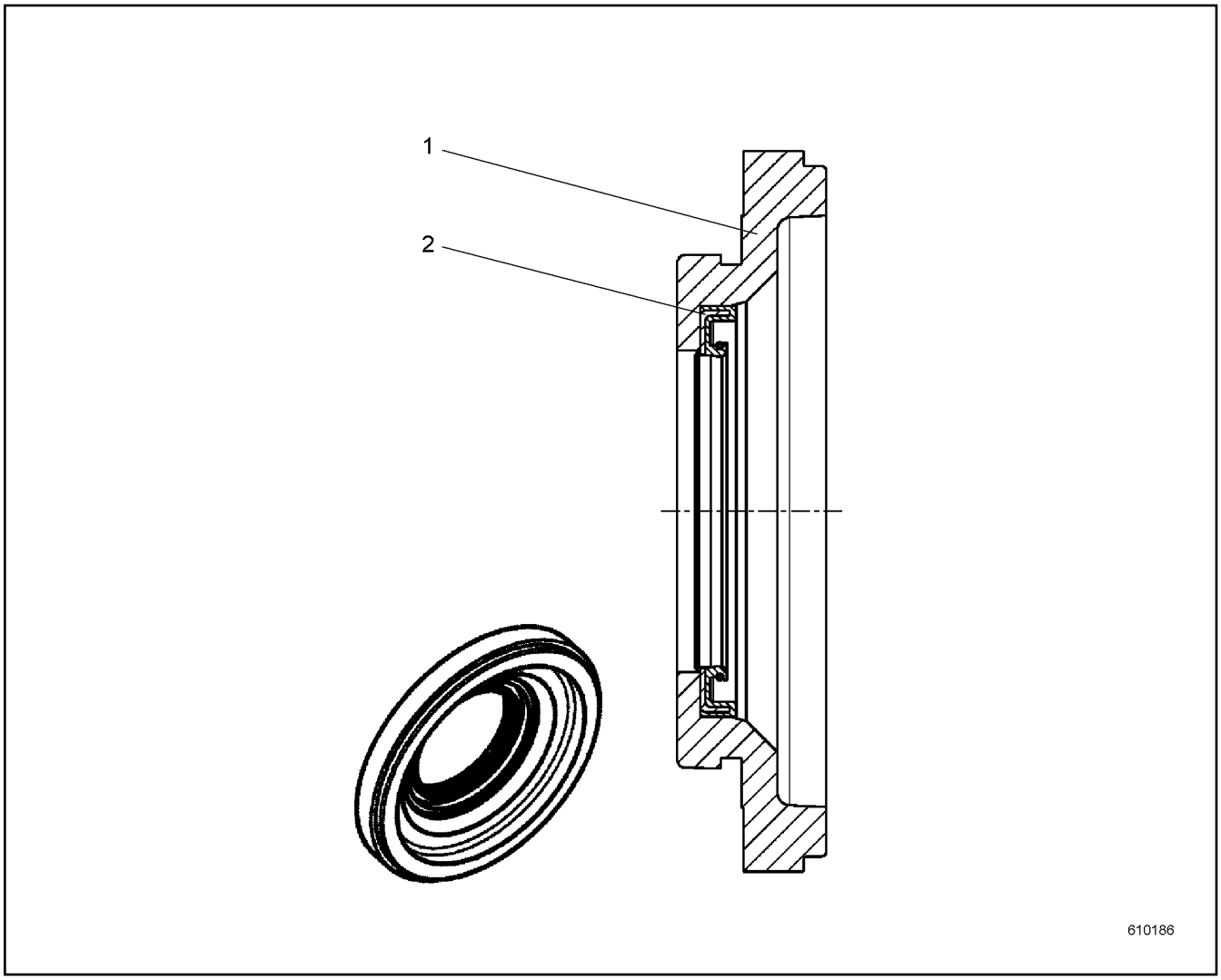

Pos.	Item	Quantity	Description	Bezeichnung	Serie	K
1	7013563	1	CLOSING RING	VERSCHLUSSRING		
2	7022315	1	SHAFT SEAL	WELLENDICHTRING		

ACHTUNG !
ATTENTION !
ATTENTION !
ATENCIÓN !
ATENÇÃO !
ВНИМАНИЕ

Für Schlauchbestellungen kann über die Schlauchnummer, in der entsprechenden Schlauchliste, die Identnummer festgestellt werden.

For ordering flexible hoses you can find the identification number through the hose-number in the corresponding hose-list.

Pour des ordres de tuyau flexible le nombre d'identification on voit dans la liste de tuyau flexible correspondente.

Para el pedido de manguera, indicar el número de identificación de la manguera de la lista respectiva.

Para se encomendar uma mangueira, consulte o número de identificaçao na respectiva lista de mangueiras.

Для оформления заказов на шланги/рукавы идент. № может быть определен при помощи номера шланга/рукава, указанного в соотетствующем перечне шлангов/рукавов.

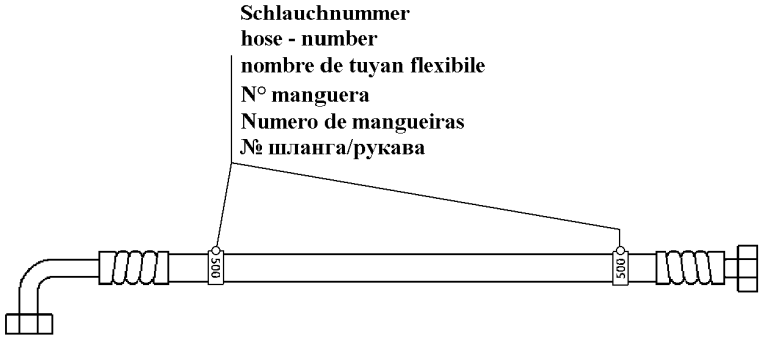

500000

Pos.	Item	Quantity	Description	Bezeichnung	Serie	K
377	996038114	1	HOSE CPL	SCHLAUCH KPL		
380	918819414	1	HOSE CPL	SCHLAUCH KPL		
381	928113314	1	HOSE CPL	SCHLAUCH KPL		
382	995082614	1	HOSE CPL	SCHLAUCH KPL		
383	996038214	1	HOSE CPL	SCHLAUCH KPL		
384	995944214	1	HOSE CPL	SCHLAUCH KPL		
387	995944314	1	HOSE CPL	SCHLAUCH KPL		
388	991384314	1	HOSE CPL	SCHLAUCH KPL		
389	992552014	1	HOSE CPL	SCHLAUCH KPL		
390	928044014	1	HOSE CPL	SCHLAUCH KPL		
391	995944414	1	HOSE CPL	SCHLAUCH KPL		
392	995951214	1	HOSE CPL	SCHLAUCH KPL		

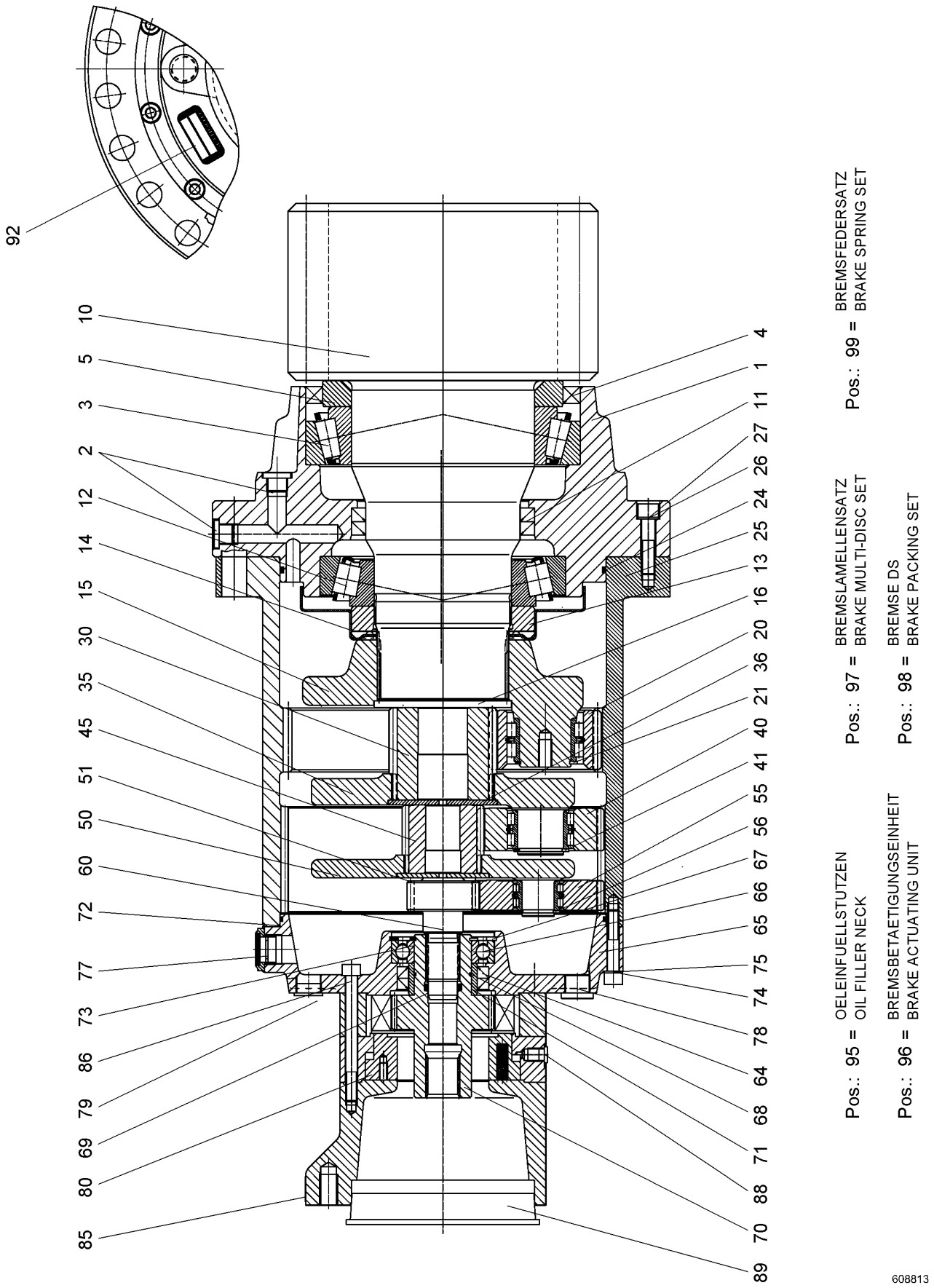
92
10
5
3
2
12
14
15
30
35
45
51
50
60
72
77
73
86
79
69
80
85
4
1
11
27
26
24
25
13
16
20
36
21
40
41
55
56
67
66
65
75
74
78
64
68
71
88
70
89
Pos.: 95 = OELEINFUELLSTUTZEN
OIL FILLER NECK
Pos.: 96 = BREMSBETAETIGUNGSEINHEIT
BRAKE ACTUATING UNIT
Pos.: 97 = BREMSLAMELLENSATZ
BRAKE MULTI-DISC SET
Pos.: 98 = BREMSE DS
BRAKE PACKING SET
Pos.: 99 = BREMSFEDERSATZ
BRAKE SPRING SET
608813

Pos.	Item	Quantity	Description	Bezeichnung	Serie	K
1	927562201	1	OUTPUT SHAFT HOUSING	ABTRIEBSWELLENGEHAEUSE		
2	477510201	4	SCREW PLUG	VERSCHLUSSSCHRAUBE		
3	746224201	1	TAPERED ROLLER BEARING	KEGELROLLENLAGER		
4	710054401	1	ROTARY SHAFT LIP SEAL	RADIALWELLENDICHTRING		
5	927562301	1	WASHER	SCHEIBE		
10	938585201	1	OUTPUT SHAFT	ABTRIEBSWELLE		
11	710058901	2	ROTARY SHAFT LIP SEAL	RADIALWELLENDICHTRING		
12	7462008	1	TAPERED ROLLER BEARING	KEGELROLLENLAGER		
13	927509501	1	SLOTTED NUT M120X2 C45	NUTMUTTER		
14	927509601	1	COVER PLATE	ABDECKBLECH		
15	90022085	1	PLANETARY CARRIER	PLANETENTRAEGER		
16	944228903	1	RETAINING DISK	HALTESCHEIBE		
20	927562601	5	PLANET WHEEL	PLANETENRAD		
21	4000870	5	LOCKING RING DIN 471 45X2.5	SICHERUNGSRING		
24	7264148	1	O-RING	O-RING		
25	927562801	1	INNER WHEEL	INNENRAD		
26	4000784	8	SOCKET HEAD SCREW ISO 4762 M12X50 10.9	ZYLINDERSCHRAUBE		
27	4900093	8	LOCK WASHER 12X13X18X2.1	SICHERUNGSSCHEIBE		
30	927562901	1	SUN WHEEL	SONNENRAD		
35	927597201	1	PLANETARY CARRIER	PLANETENTRAEGER		
36	944169103	1	RETAINING DISK	HALTESCHEIBE		
40	927596701	3	PLANET WHEEL	PLANETENRAD		
41	428003314	3	LOCKING RING DIN 471 40X2.5	SICHERUNGSRING		
45	927597301	1	SUN WHEEL	SONNENRAD		
50	927651401	1	PLANETARY CARRIER	PLANETENTRAEGER		
51	944112203	1	RETAINING DISK	HALTESCHEIBE		
55	927651501	3	PLANET WHEEL	PLANETENRAD		
56	4630001	3	LOCKING RING DIN 471 28X2	SICHERUNGSRING		
60	927651701	1	SUN WHEEL	SONNENRAD		
64	710022201	2	ROTARY SHAFT LIP SEAL	RADIALWELLENDICHTRING		
65	927563901	1	GEARBOX COVER	GETRIEBEDECKEL		
66	745141001	1	DEEP GROOVE BALL BEARING	RILLENKUGELLAGER		
67	10171632	1	LOCKING RING DIN 472 90X3	SICHERUNGSRING		
68	726435801	1	O-RING	O-RING		
69	726453901	1	O-RING	O-RING		
70	927564001	1	MULTI-DISC CARRIER	LAMELLENTRAEGER		
71	747401901	1	INNER RING	INNENRING		
72	10171585	1	LOCKING RING DIN 471 50X2	SICHERUNGSRING		
73	761032203	1	O-RING	O-RING		
74	10527561	12	SOCKET HEAD SCREW ISO 4762 M10X55 A4-7	ZYLINDERSCHRAUBE		
75	4229913	12	LOCK WASHER 10.5/16X2 VS10	SICHERUNGSSCHEIBE		
77	774322101	2	OIL LEVEL SIGHT GLASS	OELSCHAUGLAS		
78	477704514	1	FITTING	VERSCHRAUBUNG		
79	4097529	1	BLANKING PLUG	VERSCHLUSSSTOPFEN		
80	502038301	1	MULTI-DISK BRAKE ⇨ ❑ 397	LAMELLENBREMSE		
85	927564101	1	MOTOR FLANGE	MOTORFLANSCH		
86	10539513	12	SOCKET HEAD SCREW ISO 4762 M10X110 A4	ZYLINDERSCHRAUBE		
88	779016201	1	BLANKING PLUG	VERSCHLUSSSTOPFEN		
89	779006601	1	CONICAL PLUG	KEGELSTOPFEN		
92	431500401	2	GROOVED NAIL ISO 8746 2X6 ST	KERBNAGEL		
95	927693401	1	OIL FILLER NECK ⇨ ❑ 398	OELEINFUELLSTUTZEN		
96	10006595	1	BRAKE ACTUATING UNIT	BREMSBETAETIGUNGSEINHEIT		
97	939347801	1	BRAKE MULTI-DISC SET ⇨ ❑ 399	BREMSLAMELLENSATZ		
98	939347901	1	BRAKE PACKING SET ⇨ ❑ 400	BREMSE DS		
99	939348001	1	BRAKE SPRING SET	BREMSFEDERSATZ		

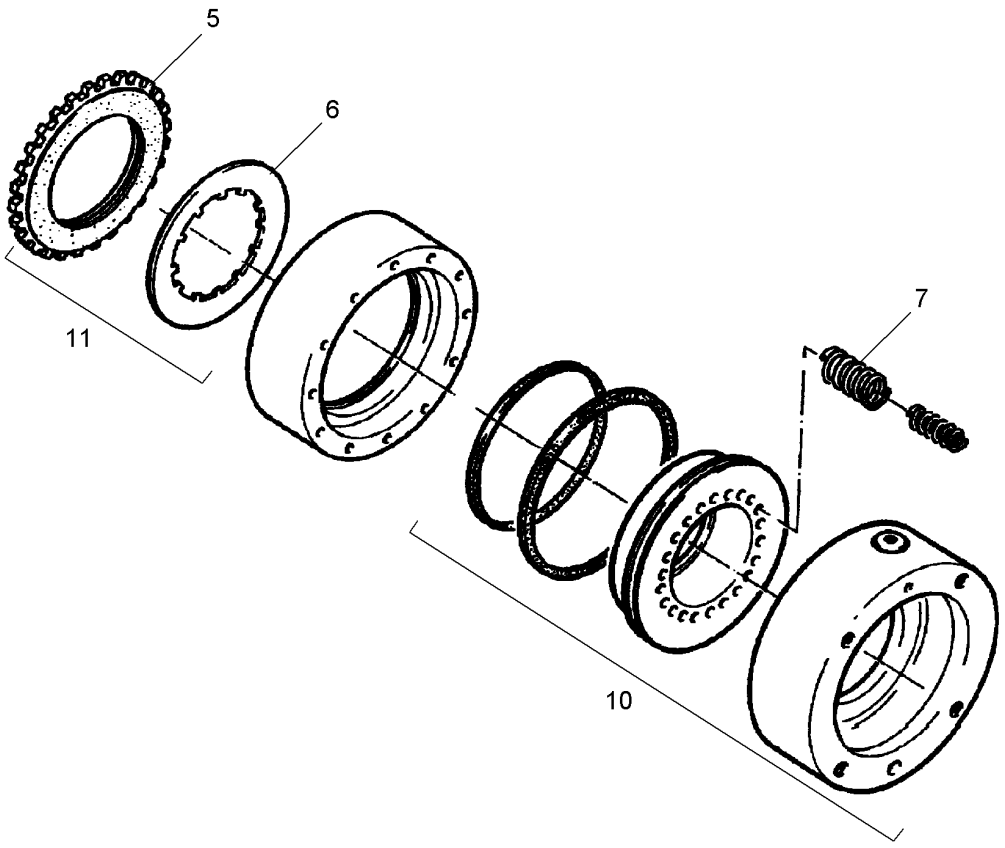

Pos.: 8 = DRUCKFEDER
PRESSURE SPRING

607903

Pos.	Item	Quantity	Description	Bezeichnung	Serie	K
5	503199301	9	OUTER MULTI-DISC	AUSSENLAMELLE		
6	540287614	7	INTERNAL MULTI-DISC	INNENLAMELLE		
7	720046001	22	PRESSURE SPRING	DRUCKFEDER		
8	720046101	12	PRESSURE SPRING	DRUCKFEDER		
10	512714614	1	SEALING SET	DS		
11	512714714	1	SEALING SET	DS		

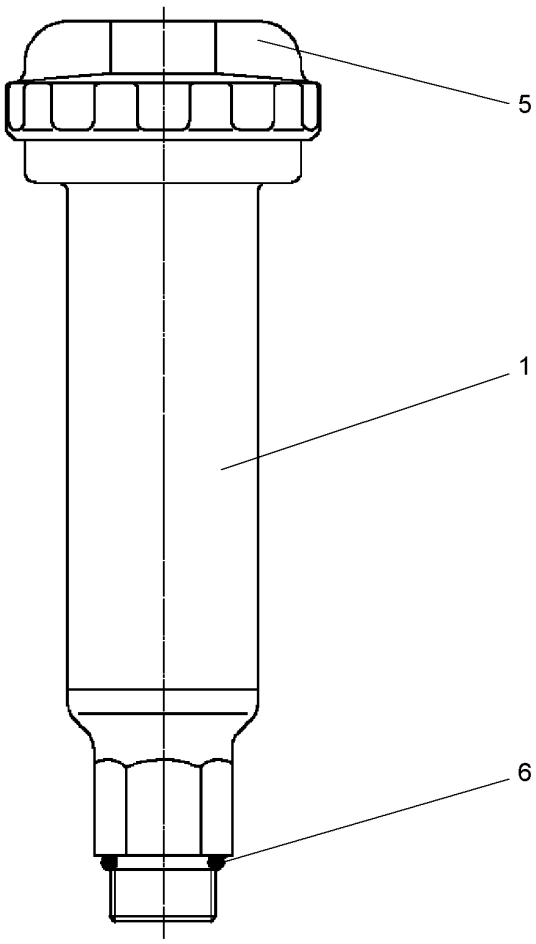

Pos.	Item	Quantity	Description	Bezeichnung	Serie	K
1	944215103	1	FILLER NECK	EINFUELLSTUTZEN		
5	7401726	1	LOCKABLE TANK CAP	TANKVERSCHLUSS		
6	7610225	1	SEALING RING	DICHTRING		

OHNE BILD
WITHOUT ILLUSTRATION
SANS PLANCHE
SIN FIG.
SEM ILUSTRAÇÃO
БЕЗ ИЗОБРАЖЕНИЯ

600000

Pos.	Item	Quantity	Description	Bezeichnung	Serie	K
4	503199301	9	OUTER MULTI-DISC	AUSSENLAMELLE		
5	503199401	7	INTERNAL MULTI-DISC	INNENLAMELLE		

OHNE BILD
WITHOUT ILLUSTRATION
SANS PLANCHE
SIN FIG.
SEM ILUSTRAÇÃO
БЕЗ ИЗОБРАЖЕНИЯ

600000

Pos.	Item	Quantity	Description	Bezeichnung	Serie	K
9	512714614	1	SEALING SET	DS		
10	512714714	1	SEALING SET	DS		

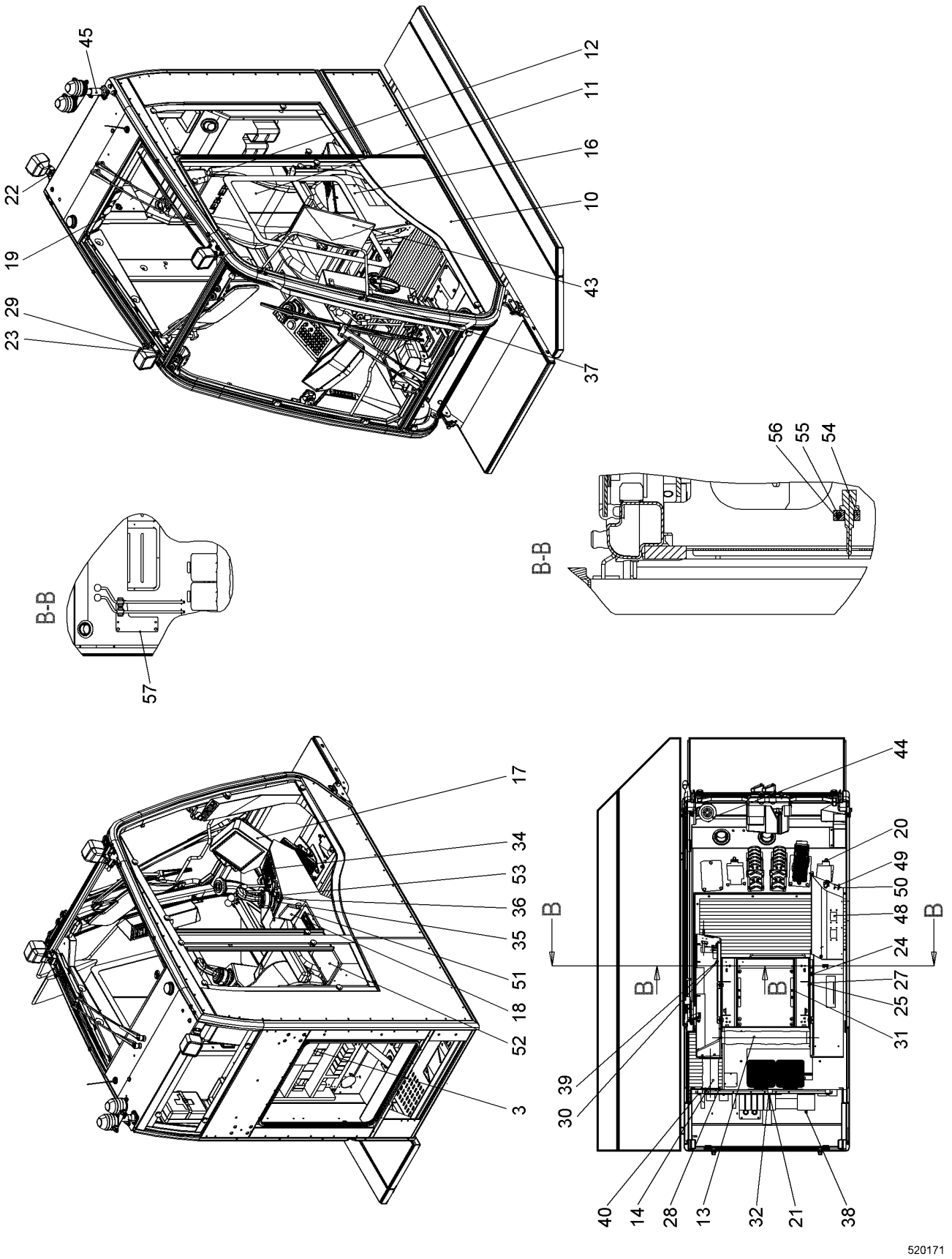

24.5.2017 520171 LIEBHERR	**138376_ETK_001** **CABIN CPL** **KABINE KPL**	❑ 401 (1/2) **11 27 970 6**

Pos.	Item	Quantity	Description	Bezeichnung	Serie	K
3	11279736	1	CABIN EL ⇨ ❑ 403	KABINE EL		
10	10350080	1	CABIN ⇨ ❑ 419	KABINE		
11	10225068	1	OPERATOR SEAT ⇨ ❑ 434	FAHRERSITZ		
12	737022103	1	HEAD REST	KOPFSTUETZE		
13	553079914	1	HOSE CPL	SCHLAUCH KPL		
14	592007514	1	HOSE CPL	SCHLAUCH KPL		
16	10223224	1	STEERING CONSOLE LEFT CPL	STEUERKONSOLE LI KPL		
17	11260956	1	STEERING CONSOLE RIGHT CPL ⇨ ❑ 437	STEUERKONSOLE RE KPL		
19	10541536	20	PAN-HEAD SCREW ISO 7045 M3X16 A2-70	FLACHKOPFSCHRAUBE		
20	420001014	18	WASHER ISO 7089 8 A4	SCHEIBE		
21	404403114	1	GRUB SCREW ISO 4026 M10X40 45H	GEWINDESTIFT		
22	406501714	5	HEX SCREW ISO 4017 M6X16 A4-70	SECHSKANTSCHRAUBE		
23	420000414	14	WASHER ISO 7089 6 A4	SCHEIBE		
24	4001967	2	COUNTERSUNK SCREW DIN 7991 M10X20 8.8	SENKSCHRAUBE		
25	406518714	14	HEX SCREW ISO 4017 M10X20 A4-70	SECHSKANTSCHRAUBE		
26	406501414	19	HEX SCREW ISO 4017 M8X25 A4-70	SECHSKANTSCHRAUBE		
27	420001114	6	WASHER ISO 7089 10 A4	SCHEIBE		
28	10541561	16	PAN-HEAD SCREW ISO 7045 M5X16 A2-70	FLACHKOPFSCHRAUBE		
29	485557714	8	HEX SCREW ISO 4017 M6X12 A4-70	SECHSKANTSCHRAUBE		
30	485550114	3	CAGE NUT M8-RR-123-47	KAEFIGMUTTER		
31	404206414	12	SOCKET HEAD SCREW ISO 4762 M8X20 A4-7	ZYLINDERSCHRAUBE		
32	411514614	1	HEX NUT ISO 4032 M10 A4-70	SECHSKANTMUTTER		
34	4002871	24	COUNTERSUNK SCREW ISO 7047 M4X20 4.8	SENKSCHRAUBE		
35	400180214	8	PAN-HEAD SCREW ISO 7045 M5X20 4.8	FLACHKOPFSCHRAUBE		
36	400180314	15	PAN-HEAD SCREW ISO 7045 M6X25 4.8	FLACHKOPFSCHRAUBE		
37	408606214	4	COUNTERSUNK SCREW DIN 7991 M8X20 A4-7	SENKSCHRAUBE		
38	411515014	4	HEX NUT ISO 4032 M8 A4-70	SECHSKANTMUTTER		
39	406501514	14	HEX SCREW ISO 4017 M8X16 A4-70	SECHSKANTSCHRAUBE		
40	10540511	8	WASHER ISO 7093-1 10 A4	SCHEIBE		
43	779002114	1	OUTSIDE MIRROR	AUSSENSPIEGEL		
44	970785703	1	SPIRIT LEVEL ASSY. ⇨ ❑ 438	LIBELLE EINBAU		
45	10537560	1	LAMP HOLDER CPL ⇨ ❑ 439	LEUCHTENHALTER KPL		
47	10540484	4	HEX NUT ISO 10511 M5 A4	SECHSKANTMUTTER		
48	10593544	2	COVER	DECKEL		
49	10593554	1	COVER	DECKEL		
50	485546514	12	HEX NUT ISO 4032 M3 A4-70	SECHSKANTMUTTER		
51	10549547	1	NAMEPLATE CONTROL PLATE	SCHILD STEUERPLATTE		
52	10549800	1	NAMEPLATE CONTROL PLATE	SCHILD STEUERPLATTE		
53	10549545	1	ADAPTOR 5X84X90 PA 6	ADAPTER		
54	10591343	1	HOLDER	HALTER		
55	10526837	1	HEX SCREW ISO 4017 M6X50 A4-70	SECHSKANTSCHRAUBE		
56	411517114	2	HEX NUT ISO 4032 M6 A4-70	SECHSKANTMUTTER		
57	11309625	1	HOLDER CPL ⇨ ❑ 440	HALTER KPL		

OHNE BILD
WITHOUT ILLUSTRATION
SANS PLANCHE
SIN FIG.
SEM ILUSTRAÇÃO
БЕЗ ИЗОБРАЖЕНИЯ

600000

Pos.	Item	Quantity	Description	Bezeichnung	Serie	K
8	10559635	1	SWITCH CABINET X1 ⇨ ❑ 405	SCHALTSCHR X1		
10	10519079	1	CONTROL STAND LEFT ⇨ ❑ 408	STEUERSTAND LI		
20	11260957	1	CONTROL STAND RIGHT ⇨ ❑ 414	STEUERSTAND RE		
31	916525114	1	CABLE DUCT CABINET 1 ⇨ ❑ 415	KABELDURCHFUEHRUNG KABIN		
41	607147008	1	INTERNAL LIGHT	INNENLEUCHTE		
42	607021714	1	LIGHT BULB	GLUEHLAMPE		
43	607023214	1	LIGHT BULB	GLUEHLAMPE		
47	6003031	6	SLEEVE CONTACT	BUCHSENKONTAKT		
49	10224272	3	HOLDER	HALTER		
50	7027205	3	WORK LIGHT ⇨ ❑ 48	ARBEITSSCHEINWERFER		
51	605264814	3	PLUG	STECKER		
52	7368242	3	CONTACT LOCK	KONTAKTVERRIEGELUNG		
53	600454314	6.5	CONTROL LEAD	STEUERLEITUNG		
54	602305914	3	FLAT PLUG HOUSING	FLACHSTECKERGEHAEUSE		
55	602203914	6	FLAT PLUG	FLACHSTECKER		
61	611052614	1	FILTER BLOWER INSTALLATION ⇨ ❑ 416	FILTERLUEFTER EINBAU		
71	10350334	2	LOUDSPEAKER	LAUTSPRECHER		
74	614027114	1	EXTENSION CABLE	VERLAENGERUNGSKABEL		
76	11645490	1	ANTENNA	ANTENNE		
81	614046114	1	HOOTER	HUPE		

OHNE BILD
WITHOUT ILLUSTRATION
SANS PLANCHE
SIN FIG.
SEM ILUSTRAÇÃO
БЕЗ ИЗОБРАЖЕНИЯ

600000

Pos.	Item	Quantity	Description	Bezeichnung	Serie	K
83	11952726	1	SOUND TRANSMITTER EL ⇨ ❑ 417	SCHALLGEBER EL		
85	10424276	1	TEMPERATURE SENSOR	TEMPERATURFUEHLER		
90	10524928	1	FLASHING LIGHT	BLITZLEUCHTE		
91	602209014	1	FLAT PLUG HOUSING	FLACHSTECKERGEHAEUSE		
92	602203914	6	FLAT PLUG	FLACHSTECKER		
93	6203137	1	BUSHING HOUSING	BUCHSENGEHAEUSE		
94	7368248	1	CONTACT LOCK	KONTAKTVERRIEGELUNG		
95	6003031	6	SLEEVE CONTACT	BUCHSENKONTAKT		
96	10542325	1	PROTECTING CAP	SCHUTZKAPPE		
97	693030914	2	CONTROL LEAD	STEUERLEITUNG		
98	10540846	1	WIRING HARNESS	KABELSTRANG		
100	10524927	1	SIGNAL LAMP	SIGNALLEUCHTE		
150	11234650	4	CABLE	KABEL		
201	10519082	1	CABLE LOOM W 19	KABELSTRANG W 19		
202	11261603	1	CABLE LOOM W 20	KABELSTRANG W 20		
203	10519084	1	WIRING HARNESS	KABELSTRANG		
204	10519085	1	CABLE LOOM W 22	KABELSTRANG W 22		
205	11912031	1	WIRING HARNESS	KABELSTRANG		
206	11259039	1	WIRING HARNESS	KABELSTRANG		
210	11223717	2	FOOT PEDAL	FUSSPEDAL		
211	11223691	1	FOOT PEDAL EL INSTALLATION ⇨ ❑ 418	FUSSPEDAL EL EINBAU		
212	11273458	2	ROD CPL	STANGE KPL		

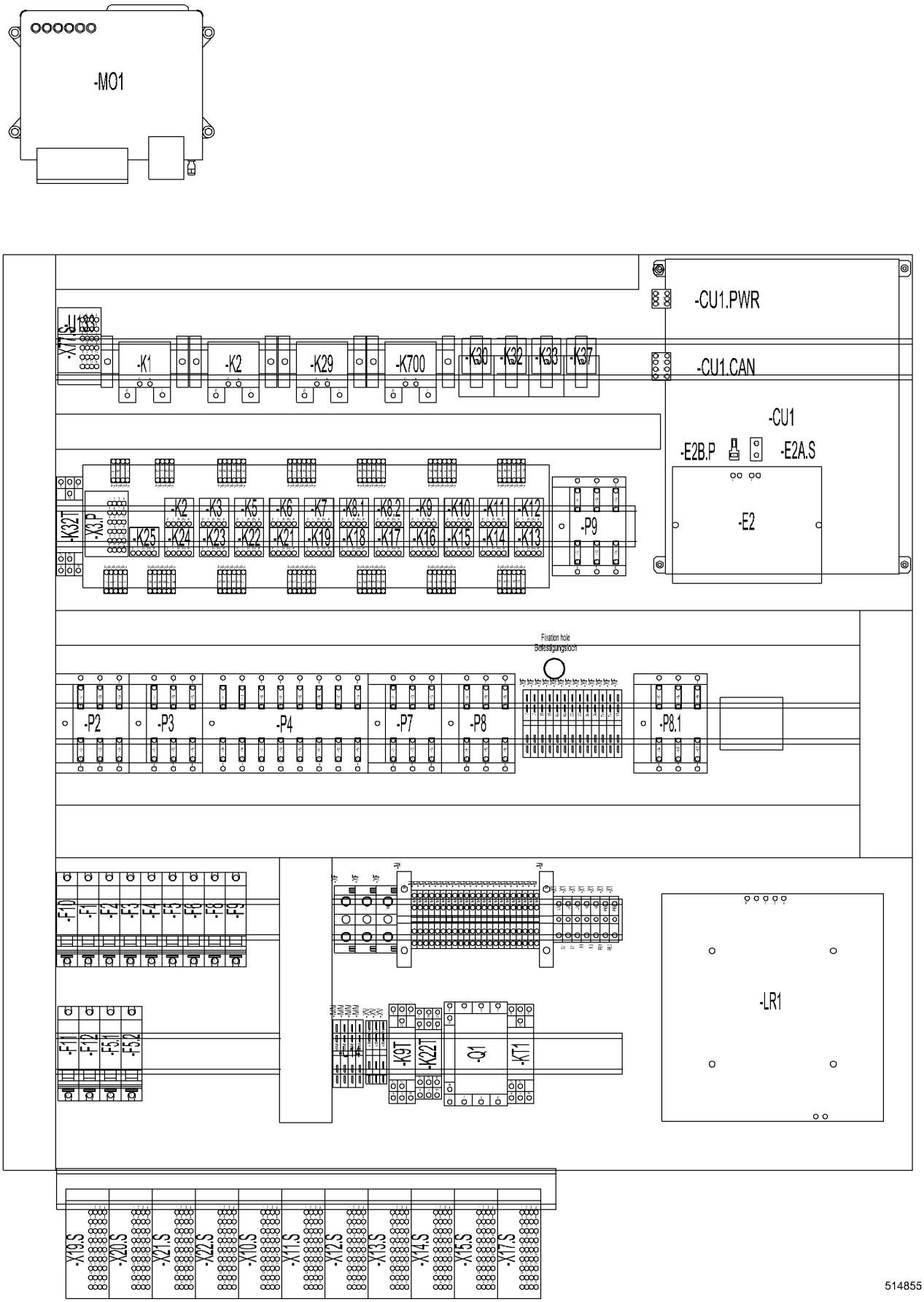
-M01
-CU1.PWR
-CU1.CAN
-CU1
-E2B.P
-E2A.S
-E2
-K1
-K2
-K29
-K700
-K30
-K32
-K33
-K37
-K32T
-X3.P
-K25
-K24
-K23
-K22
-K21
-K19
-K18
-K17
-K16
-K15
-K14
-K13
-P9
Fixation hole
Befestigungsloch
-P2
-P3
-P4
-P7
-P8
-P8.1
-F10
-F1
-F2
-F3
-F4
-F5
-F6
-F8
-F9
-F11
-F12
-F5.1
-F5.2
-K9T
-K22T
-Q1
-KT1
-LR1
-X19.S
-X20.S
-X21.S
-X22.S
-X10.S
-X11.S
-X12.S
-X13.S
-X14.S
-X15.S
-X17.S
514855

Pos.	Item	Quantity	Description	Bezeichnung	Serie	K
21	10526962	1	SUBPLATE	MONTAGEPLATTE		
25	10559638	1	CABLE LOOM W 10	KABELSTRANG W 10		
31	10223180	1	CONTROL SYSTEM	STEUERRECHNER		
32	10541109	1	DATA CARD CF2	DATEN KARTE CF2		
41	607147008	1	INTERNAL LIGHT	INNENLEUCHTE		
42	607021714	1	LIGHT BULB	GLUEHLAMPE		
43	607023214	1	LIGHT BULB	GLUEHLAMPE		
51	917585714	1	PC-BOARD PLATE 1	STECKKARTE PLATINE 1		
56	992081114	1	RESERVE FUSES ⇨ ❑ 407	RESERVESICHERUNGEN		
57	10529597	1	BUSBAR	SAMMELSCHIENE		
58	11219647	1	BUSBAR	SAMMELSCHIENE		
59	10351108	2	CONTACT GUARD	BERUEHRUNGSSCHUTZ		
60	10351101	1	CABLE PROTECTION SWITCH	LEITUNGSSCHUTZSCHALTER		
61	10351102	3	CABLE PROTECTION SWITCH	LEITUNGSSCHUTZSCHALTER		
62	10351103	1	CABLE PROTECTION SWITCH	LEITUNGSSCHUTZSCHALTER		
63	10351104	2	CABLE PROTECTION SWITCH	LEITUNGSSCHUTZSCHALTER		
64	10351105	1	CABLE PROTECTION SWITCH	LEITUNGSSCHUTZSCHALTER		
65	10351106	3	CABLE PROTECTION SWITCH	LEITUNGSSCHUTZSCHALTER		
68	604105314	5	FLAT FUSE LINK	FLACHSICHERUNGSEINSATZ		
69	604105514	41	FLAT FUSE LINK	FLACHSICHERUNGSEINSATZ		
70	604105614	6	FLAT FUSE LINK	FLACHSICHERUNGSEINSATZ		
71	693181114	3	SERIES TERMINAL	REIHENKLEMME		
72	602832314	1	PARTITION	TRENNWAND		
73	693138614	1	CROSS CONNECTOR	QUERVERBINDER		
74	602153814	13	SERIES TERMINAL	REIHENKLEMME		
75	10550739	22	SERIES TERMINAL	REIHENKLEMME		
78	693182314	2	CLOSING PLATE	ABSCHLUSSPLATTE		
79	10227563	2	INSULATING ELEMENT	ISOLIERSTUECK		
80	602153814	4	SERIES TERMINAL	REIHENKLEMME		
81	630120108	4	CUTOFF RELAY	TRENNRELAIS		
83	630121508	1	CENTER-ZERO RELAY	WECHSLERRELAIS		
84	630122908	1	RELAY SOCKET	RELAIS STECKSOCKEL		
85	630170014	1	TIME RELAY	ZEITRELAIS		
86	602151914	4	SERIES TERMINAL	REIHENKLEMME		
87	602812714	1	CLOSING PLATE	ABSCHLUSSPLATTE		
88	602812414	1	CROSS CONNECTOR	QUERVERBINDER		
91	693183914	1	VOLTAGE TRANSFORMER	SPANNUNGSWANDLER		
92	602208714	1	FLAT PLUG HOUSING	FLACHSTECKERGEHAEUSE		
93	602209714	1	ATTACHABLE SLEEVE HOUSING	STECKHUELSENGEHAEUSE		
201	605253314	11	PLUG	STECKER		
203	605254214	11	PLUG	STECKER		
211	605253414	1	PLUG	STECKER		
213	605254114	1	PLUG	STECKER		

OHNE BILD
WITHOUT ILLUSTRATION
SANS PLANCHE
SIN FIG.
SEM ILUSTRAÇÃO
БЕЗ ИЗОБРАЖЕНИЯ

600000

Pos.	Item	Quantity	Description	Bezeichnung	Serie	K
2	10227556	1	FUSE ASSAYER	SICHERUNGSPRUEFER		
5	604105314	5	FLAT FUSE LINK	FLACHSICHERUNGSEINSATZ		
7	604105414	5	FLAT FUSE LINK	FLACHSICHERUNGSEINSATZ		
10	604105514	10	FLAT FUSE LINK	FLACHSICHERUNGSEINSATZ		
15	604105614	5	FLAT FUSE LINK	FLACHSICHERUNGSEINSATZ		
21	10224306	2	FUSE CARTRIDGE	SICHERUNGSEINSATZ		
22	10224307	2	FUSE CARTRIDGE	SICHERUNGSEINSATZ		

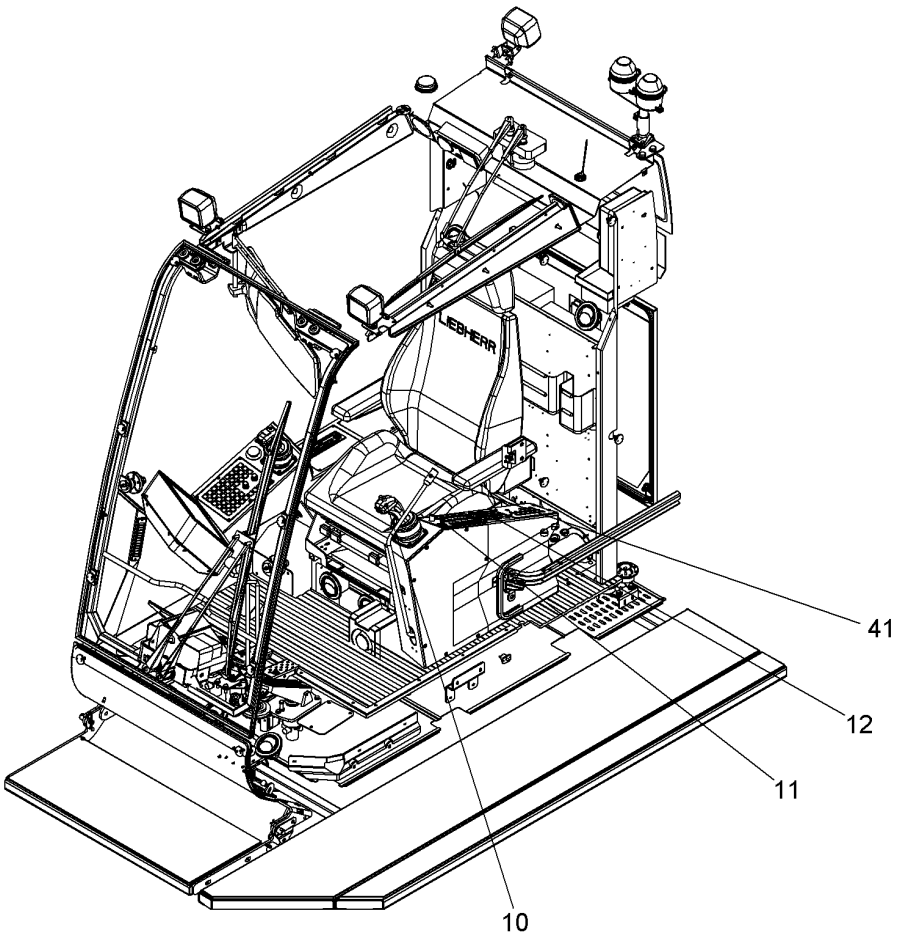

Pos.	Item	Quantity	Description	Bezeichnung	Serie	K
10	11214818	1	MASTER SWITCH ⇨ ❑ 409	MEISTERSCHALTER		
11	10036107	1	KEYBOARD OPERATING PANEL CPL ⇨ ❑ 410	TASTATUR BEDIENPULT X11 KP		
12	10531718	1	KEYBOARD ⇨ ❑ 411	TASTATUR		
31	10599206	1	OPERATING HOURS COUNTER	BETRIEBSSTUNDENZAEHLER		
32	10599215	1	ADAPTER FRAME	ADAPTERRAHMEN		
41	693168514	1	SAFETY LEVER CPL ⇨ ❑ 413	SICHERHEITSHEBEL KPL		

OHNE BILD
WITHOUT ILLUSTRATION
SANS PLANCHE
SIN FIG.
SEM ILUSTRAÇÃO
БЕЗ ИЗОБРАЖЕНИЯ

600000

Pos.	Item	Quantity	Description	Bezeichnung	Serie	K
1	606272314	1	RUBBER BELLOWS	FALTENBALG		

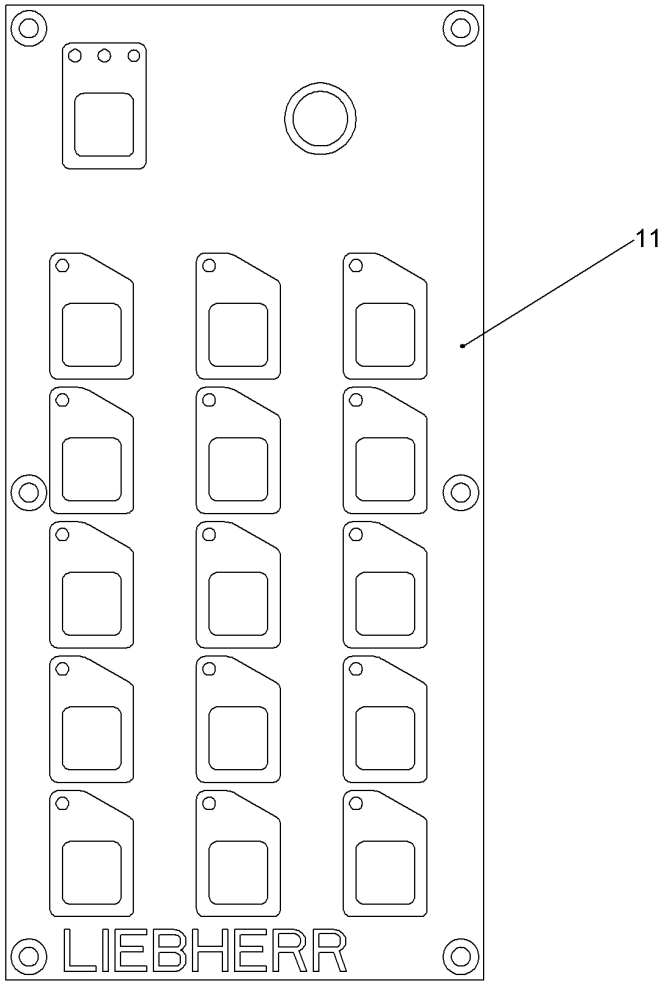

Pos.	Item	Quantity	Description	Bezeichnung	Serie	K
11	612436814	1	CONTROL AREA	BEDIENFELD		
80	10687925	1	TURNING KNOB	DREHKNOPF		
81	10687926	1	WASHER	SCHEIBE		
82	10687924	1	COVER	DECKEL		

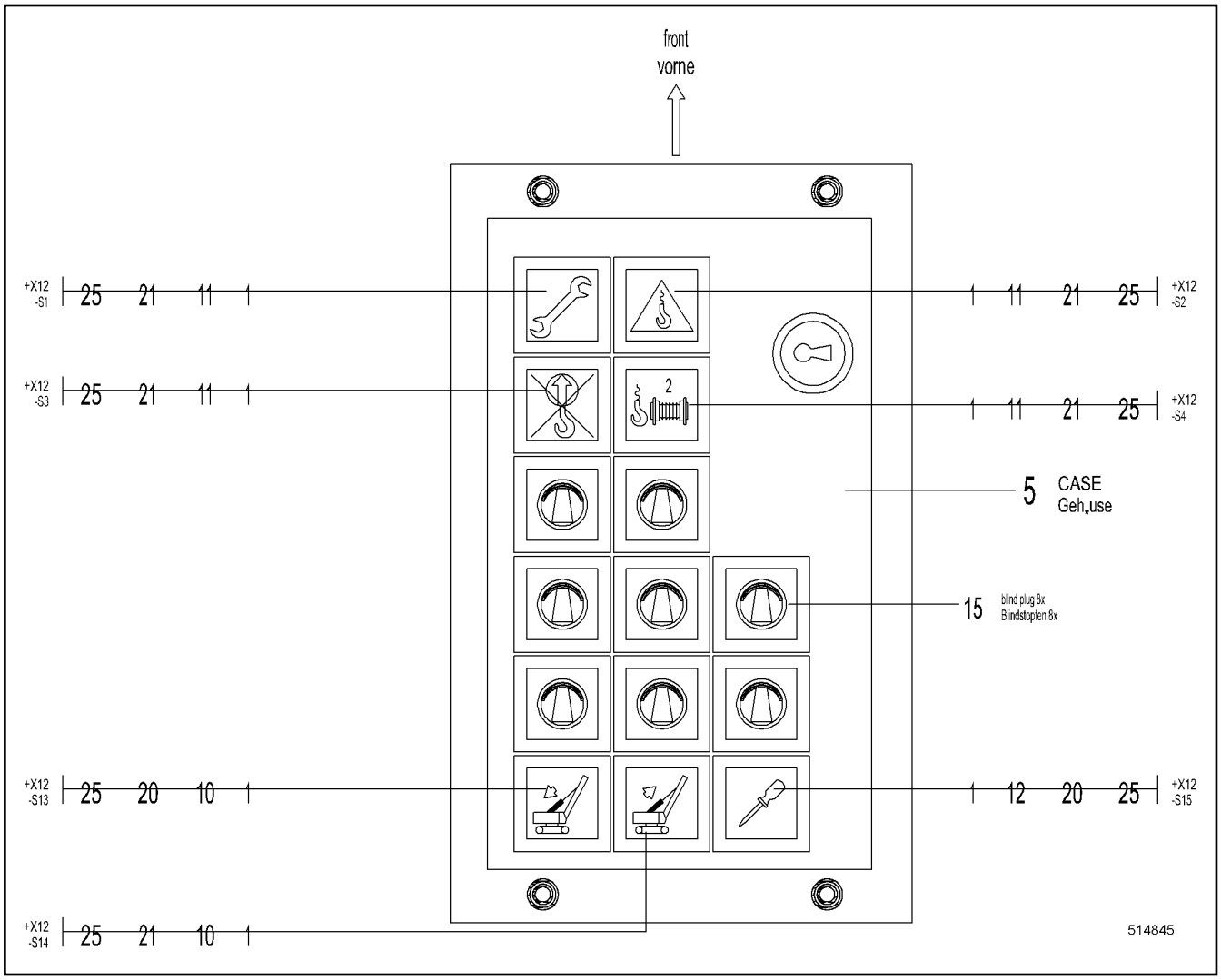

Pos.	Item	Quantity	Description	Bezeichnung	Serie	K
5	385094414	1	SWITCHING HOUSING ⇨ ❑ 412	SCHALTERGEHAEUSE		
10	606672114	2	ILLUMINATED BUTTON	LEUCHTTASTER		
11	606674714	4	ILLUMINATED BUTTON	LEUCHTTASTER		
12	606667814	1	ILLUMINATED BUTTON	LEUCHTTASTER		
15	602458214	8	STOPPER PLUG	BLINDSTOPFEN		
20	6204372	2	LUMINOUS PUSH BUTTON CONTACTOR	LEUCHTTASTKONTAKTGEBER		
21	6001593	5	LUMINOUS SWITCH CONTACT SENDER	LEUCHTSCHALTKONTAKTGEBE		
25	260514602	7	LED LAMP	LED-LAMPE		
30	400180214	4	PAN-HEAD SCREW ISO 7045 M5X20 4.8	FLACHKOPFSCHRAUBE		

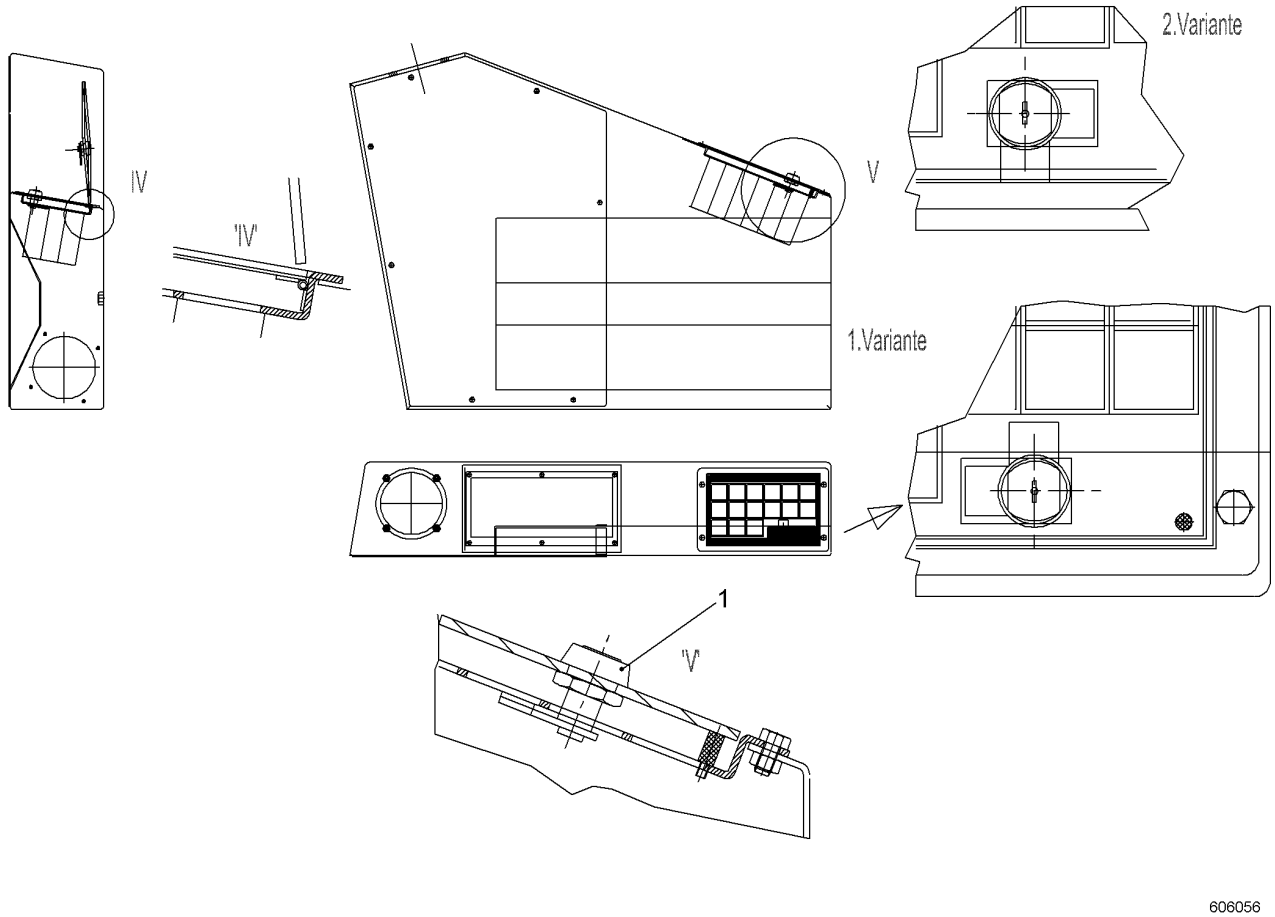

Pos.	Item	Quantity	Description	Bezeichnung	Serie	K
1	10542435	1	CYL LOCK	ZYL VERSCHLUSS		

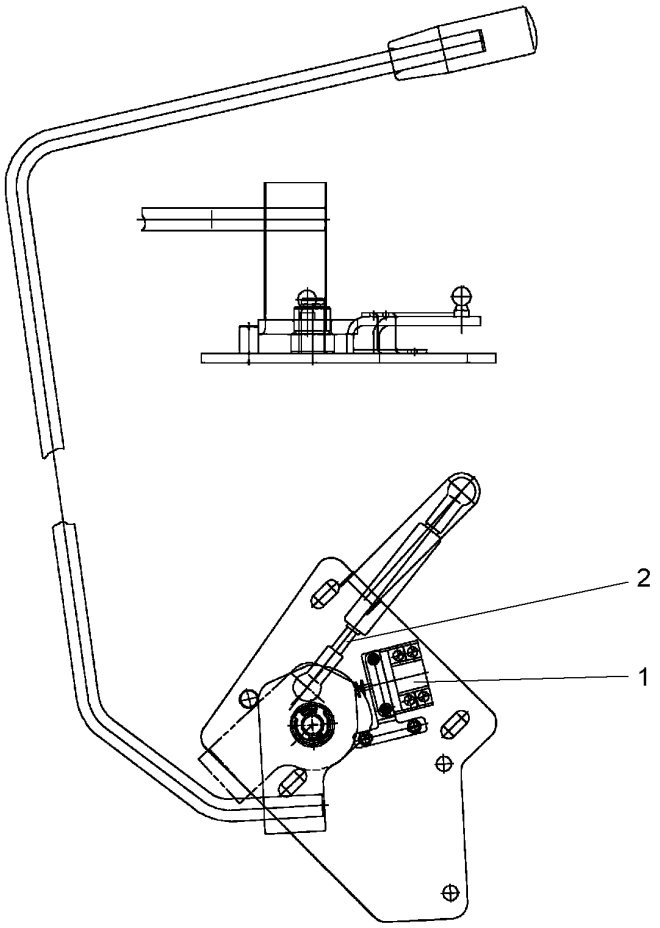

Pos.	Item	Quantity	Description	Bezeichnung	Serie	K
1	10445976	1	SWITCH	SCHALTER		
2	10800103	1	GAS OPERATED SPRING	GASDRUCKFEDER		

OHNE BILD
WITHOUT ILLUSTRATION
SANS PLANCHE
SIN FIG.
SEM ILUSTRAÇÃO
БЕЗ ИЗОБРАЖЕНИЯ

600000

Pos.	Item	Quantity	Description	Bezeichnung	Serie	K
23	10677274	1	CAN MODULE	CAN MODUL		
24	11260077	1	MONITOR LCD CPL	MONITOR LCD KPL		
31	740732003	1	IGNITION STARTER SWITCH	ZUENDSTARTSCHALTER		
32	10663904	1	ANTITHEFT LOCK	WEGFAHRSPERRE		
33	693073014	1	EMERGENCY STOP BUTTON	NOT-AUS TASTER		
35	606718408	1	EMERGENCY STOP SIGN	SCHILD NOT-AUS		
50	10663954	2	KEY	SCHLUESSEL		

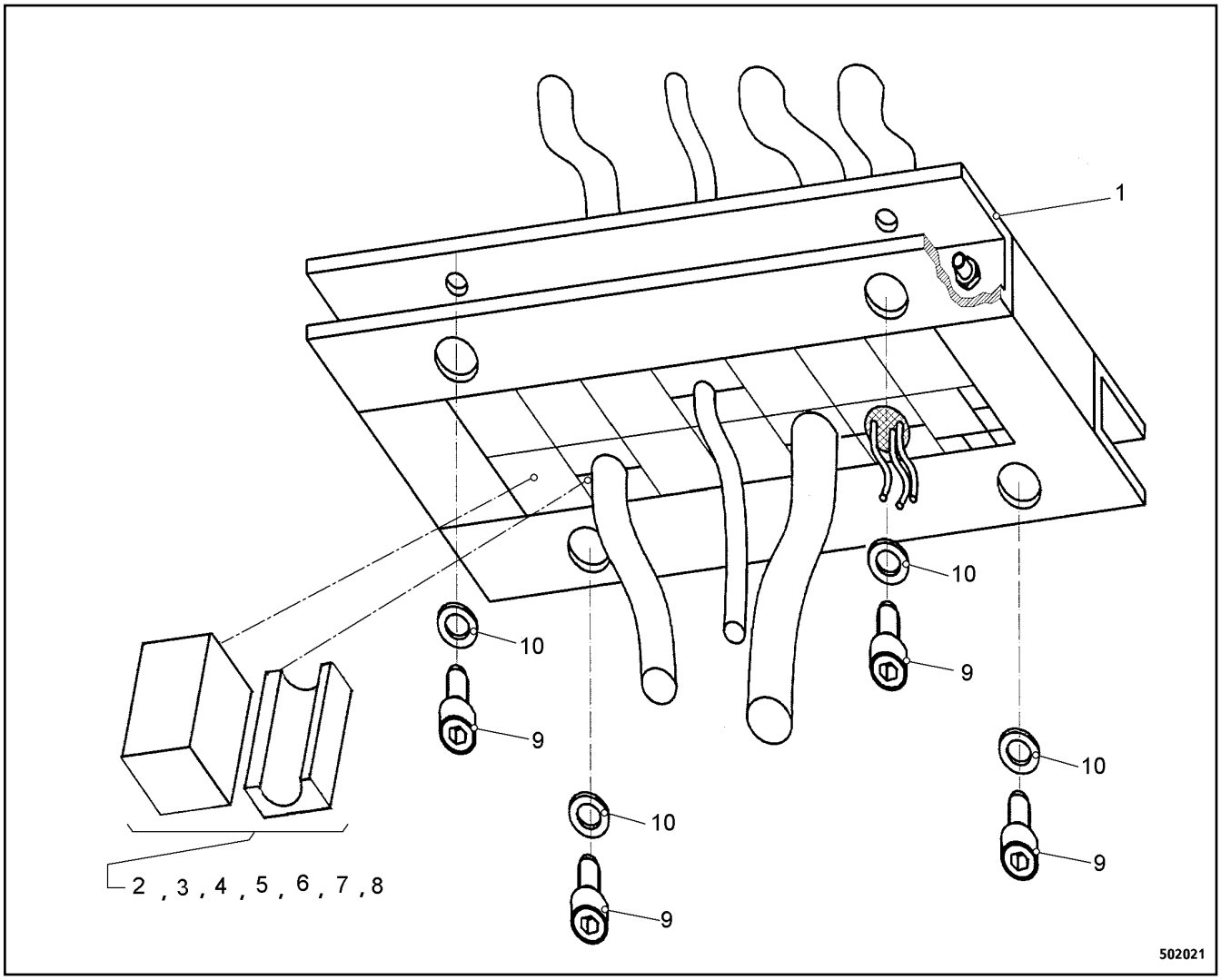

Pos.	Item	Quantity	Description	Bezeichnung	Serie	K
1	602481914	1	FRAME	RAHMEN		
2	602454614	2	SEALING MODULE	DICHTUNGSMODUL		
3	602457014	2	SEALING MODULE	DICHTUNGSMODUL		
4	602454714	2	SEALING MODULE	DICHTUNGSMODUL		
5	602453214	2	SEALING MODULE	DICHTUNGSMODUL		
6	602457114	2	SEALING MODULE	DICHTUNGSMODUL		
7	602457214	2	SEALING MODULE	DICHTUNGSMODUL		
8	602453914	2	SEALING MODULE	DICHTUNGSMODUL		
9	10539483	4	SOCKET HEAD SCREW ISO 4762 M8X16 A4-7	ZYLINDERSCHRAUBE		
10	10447017	4	LOCKING RING 8	SICHERUNGSRING		

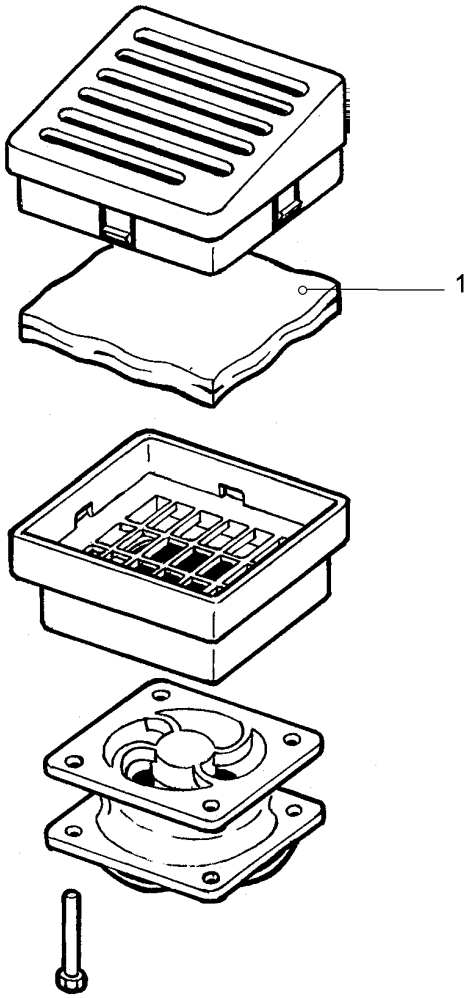

Pos.	Item	Quantity	Description	Bezeichnung	Serie	K
1	611124514	1	FILTER MAT	FILTERMATTE		

OHNE BILD
WITHOUT ILLUSTRATION
SANS PLANCHE
SIN FIG.
SEM ILUSTRAÇÃO
БЕЗ ИЗОБРАЖЕНИЯ

600000

Pos.	Item	Quantity	Description	Bezeichnung	Serie	K
10	11933792	1	SOUNDER	SCHALLGEBER		
11	692406008	1	TERMINAL HOUSING	ENDGEHAEUSE		
12	692406008	1	TERMINAL HOUSING	ENDGEHAEUSE		
13	602339508	3	SLEEVE CONTACT	BUCHSENKONTAKT		
14	605620008	3	SINGLE STRAND SEALING	EINZELADERABDICHTUNG		
15	692405708	4	STOPPER PLUG	BLINDSTOPFEN		

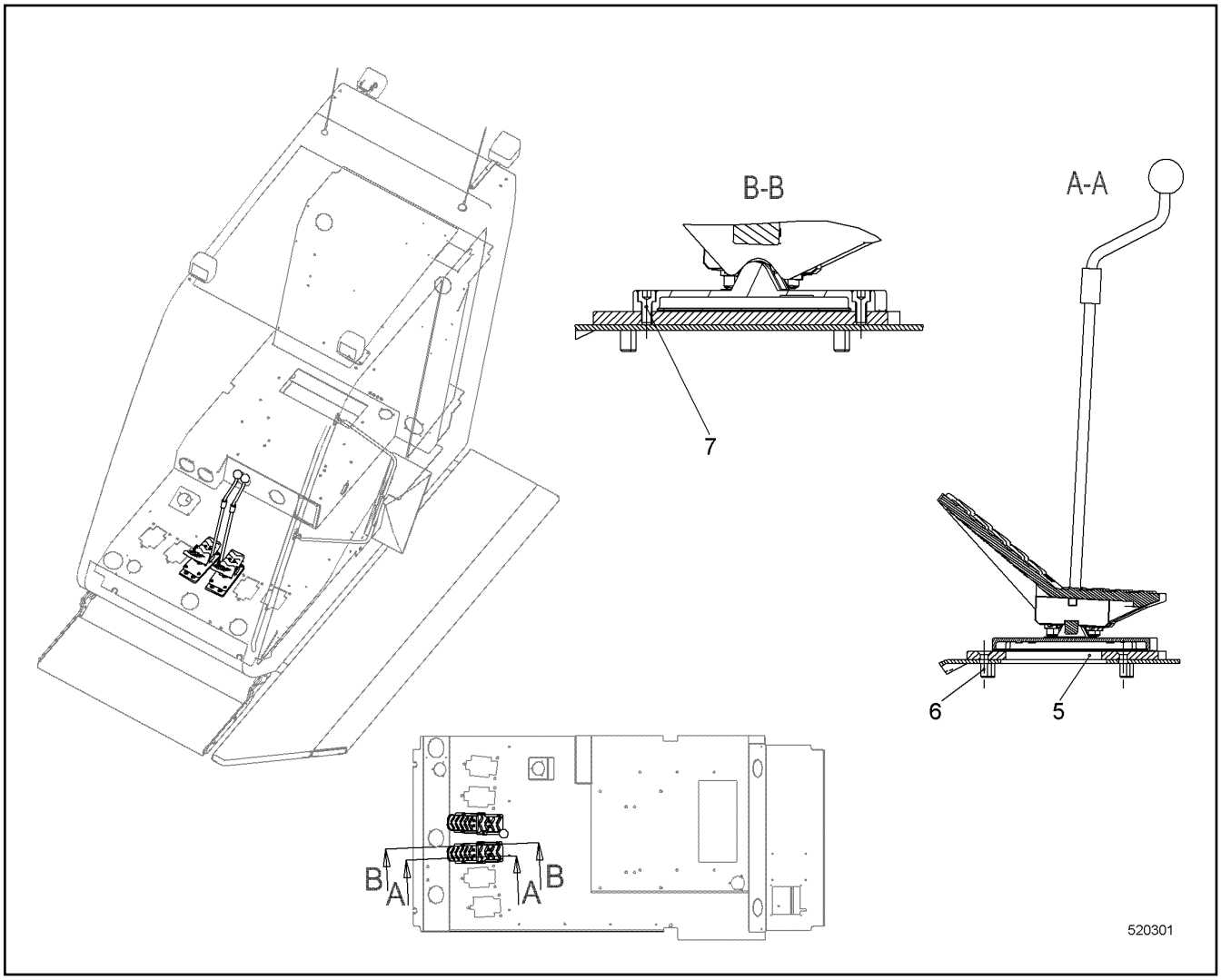

Pos.	Item	Quantity	Description	Bezeichnung	Serie	K
5	11223693	2	ADAPTER PLATE	ADAPTERBLECH		
6	408600708	8	COUNTERSUNK SCREW ISO 10642 M8X30 8.8	SENKSCHRAUBE		
7	408301208	8	SOCKET HEAD SCREW DIN 7984 M8X16 08.8	ZYLINDERSCHRAUBE		

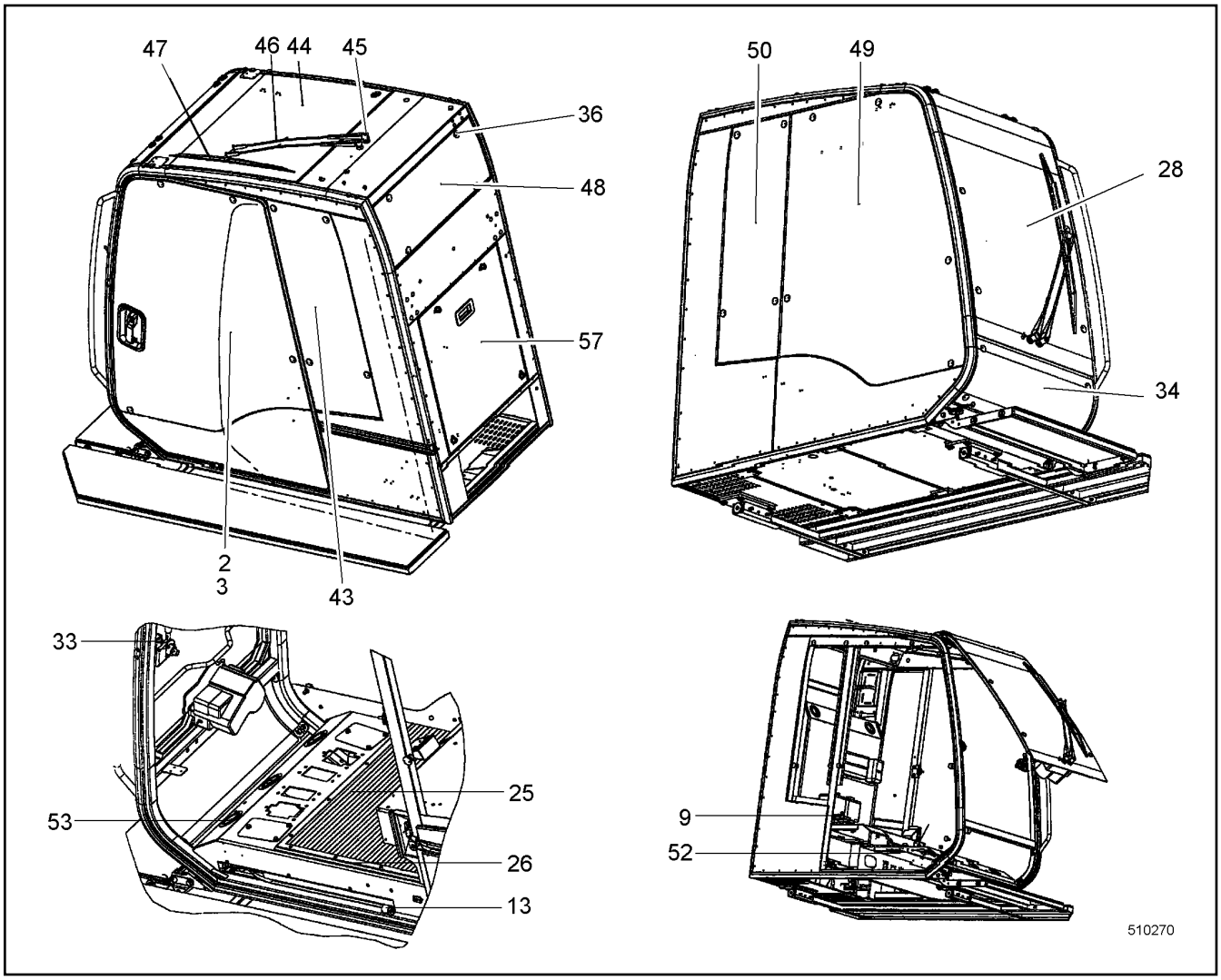

Pos.	Item	Quantity	Description	Bezeichnung	Serie	K
2	10226454	1	DOOR ACCESSORIES ⇨ ❑ 421	TUERE ZUBEHOEHR		
3	10350076	1	SLIDING DOOR ⇨ ❑ 423	SCHIEBETUER		
9	592286714	2	CONTAINER	BEHAELTER		
13	592286814	1	BUFFER	PUFFER		
25	592286914	1	FLOOR MAT	BODENMATTE		
26	592287014	1	STRIP	LEISTE		
28	592287114	1	FRONT WINDOW CPL ⇨ ❑ 426	FRONTSCHEIBE KPL		
33	592288314	1	BALL PIVOT	KUGELZAPFEN		
34	592288414	1	FRONT WINDOW CPL	FRONTSCHEIBE KPL		
36	592286514	1	FITTING	VERSCHRAUBUNG		
43	592288514	1	SIDE PANE LEFT	SEITENSCHEIBE LI		
44	592288614	1	ROOF WINDOW	DACHSCHEIBE		
45	592288714	1	WIPER MOTOR	WISCHERMOTOR		
46	592288814	1	WIPER ARM	WISCHARM		
47	592288914	1	WIPER BLADE	WISCHERBLATT		
48	592289014	1	REAR WINDOW	HECKSCHEIBE		
49	592289114	1	SIDE PANE RIGHT	SEITENSCHEIBE RE		
50	592289214	1	SIDE PANE RIGHT	SEITENSCHEIBE RE		
52	592289314	1	AIR NOZZLE	LUFTDUESE		
53	592289414	1	NOZZLE HOLDER	DUESENHALTER		
57	592289514	1	FLAP CPL ⇨ ❑ 427	KLAPPE KPL		

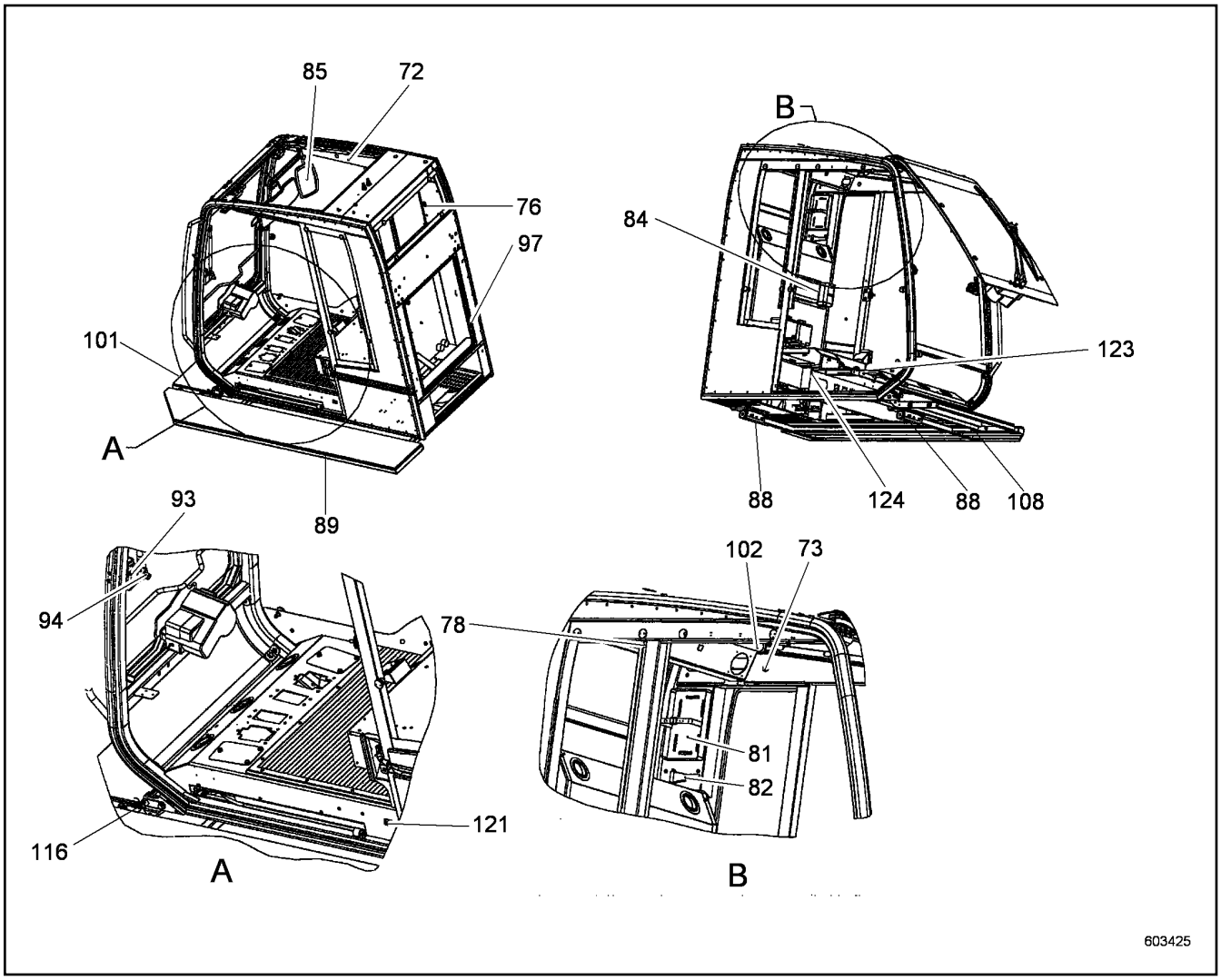

Pos.	Item	Quantity	Description	Bezeichnung	Serie	K
72	592289814	1	PANELLING RIGHT	VERKLEIDUNG RE		
73	592289914	1	MUSHROOM BUTTON	PILZKNOPF		
76	592290014	1	COAT HOOK	GARDEROBEHAKEN		
78	592290114	1	COVERS	VERKLEIDUNG		
81	592290214	1	HOLDER	HALTER		
82	592290314	1	HOLDER	HALTER		
84	592290414	1	HOLDER	HALTER		
85	592290514	1	MIRROR + SUNN VISOR ⇨ ❑ 428	SPIEGEL + SONNENBLENDE		
88	10512821	2	GUIDE	FUEHRUNG		
89	10512061	1	PEDESTAL	PODEST		
94	592291014	1	SNIB	FESTSTELLER		
97	592291114	1	PROFILE	PROFIL		
101	10512048	1	PEDESTAL	PODEST		
102	592291214	1	SUNSHADE	SONNENROLLO		
108	592291314	1	LIMIT STOP BUFFER	ANSCHLAGPUFFER		
116	592291414	1	PLATFORM FIXATION CPL ⇨ ❑ 429	PODESTSICHERUNG KPL		
121	592291814	1	SWITCH	SCHALTER		
123	592291914	1	OPERATIONAL CONTROL	BEDIENELEMENT		
124	11940910	1	AIR CONDITIONER RFK ⇨ ❑ 430	KLIMAGERAET NRS		

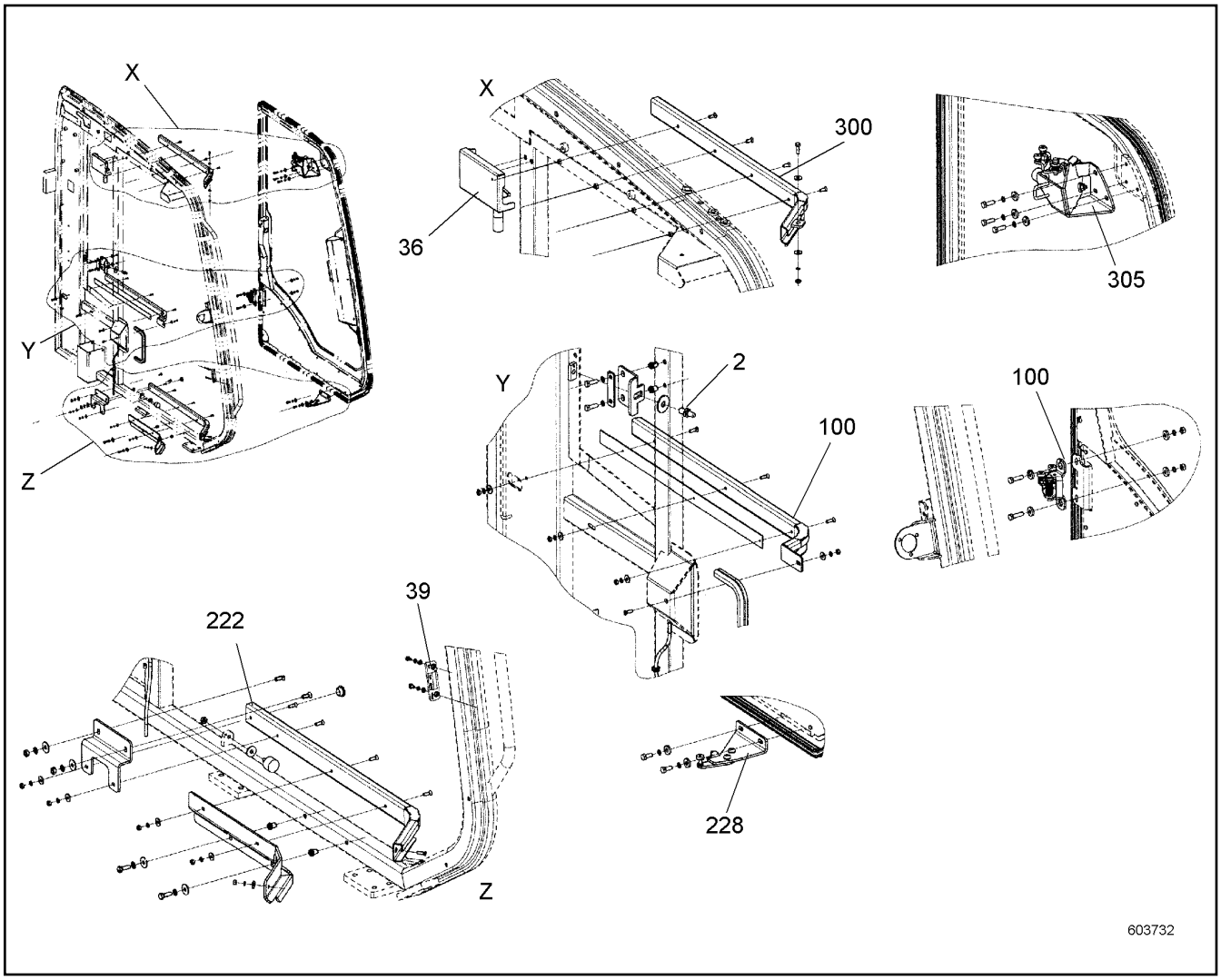

Pos.	Item	Quantity	Description	Bezeichnung	Serie	K
2	7615720	1	CLOSING PIN	SCHLIESSBOLZEN		
36	10572075	1	LOCKING	VERRIEGELUNG		
39	10447259	1	SHEET	PLATTE		
100	959576314	1	GUIDE CPL ⇨ ❑ 422	FUEHRUNG KPL		
222	10226459	1	GUIDING RAIL	FUEHRUNGSSCHIENE		
228	10226461	1	GUIDING BRACKET BELOW	FUEHRUNGSKONSOLE UNTEN		
300	10226462	1	GUIDING RAIL	FUEHRUNGSSCHIENE		
305	10226463	1	GUIDING BRACKET ABOVE	FUEHRUNGSKONSOLE OBEN		

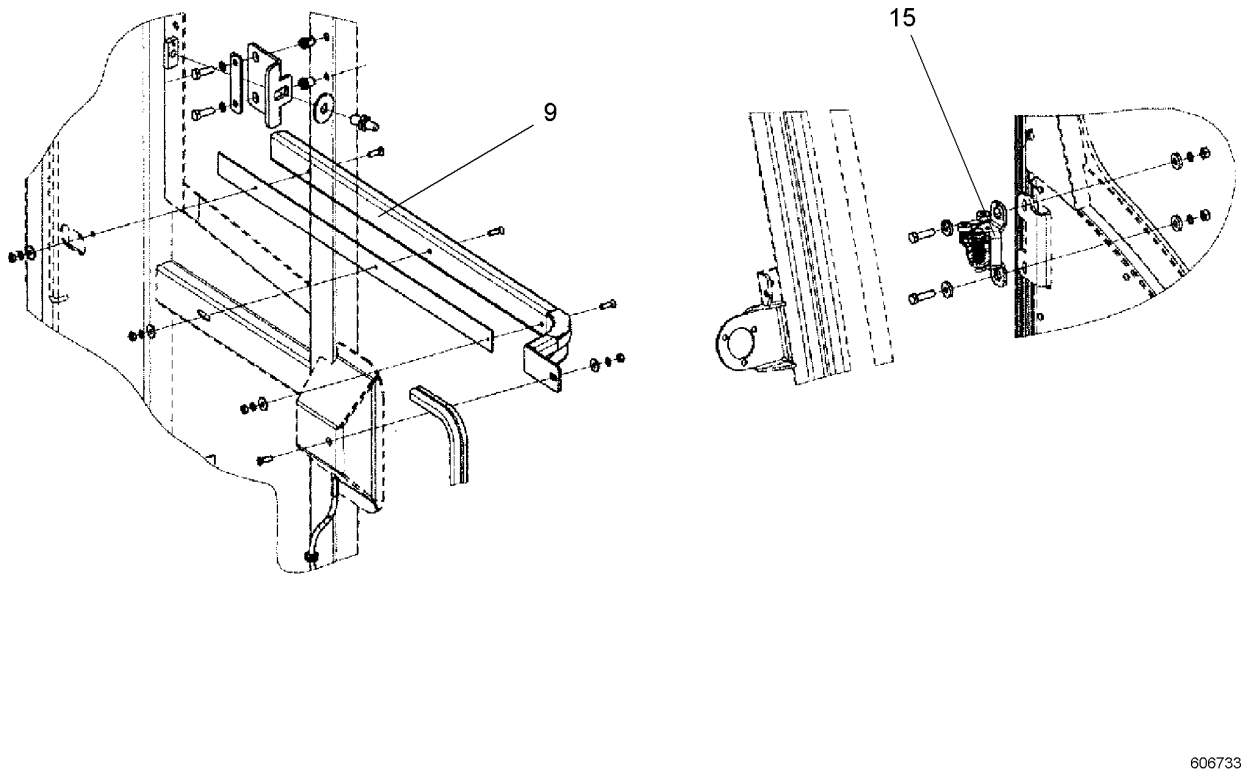

Pos.	Item	Quantity	Description	Bezeichnung	Serie	K
9	10226457	1	GUIDING RAIL	FUEHRUNGSSCHIENE		
15	10226458	1	GUIDING BRACKET CENTRE	FUEHRUNGSKONSOLE MITTE		

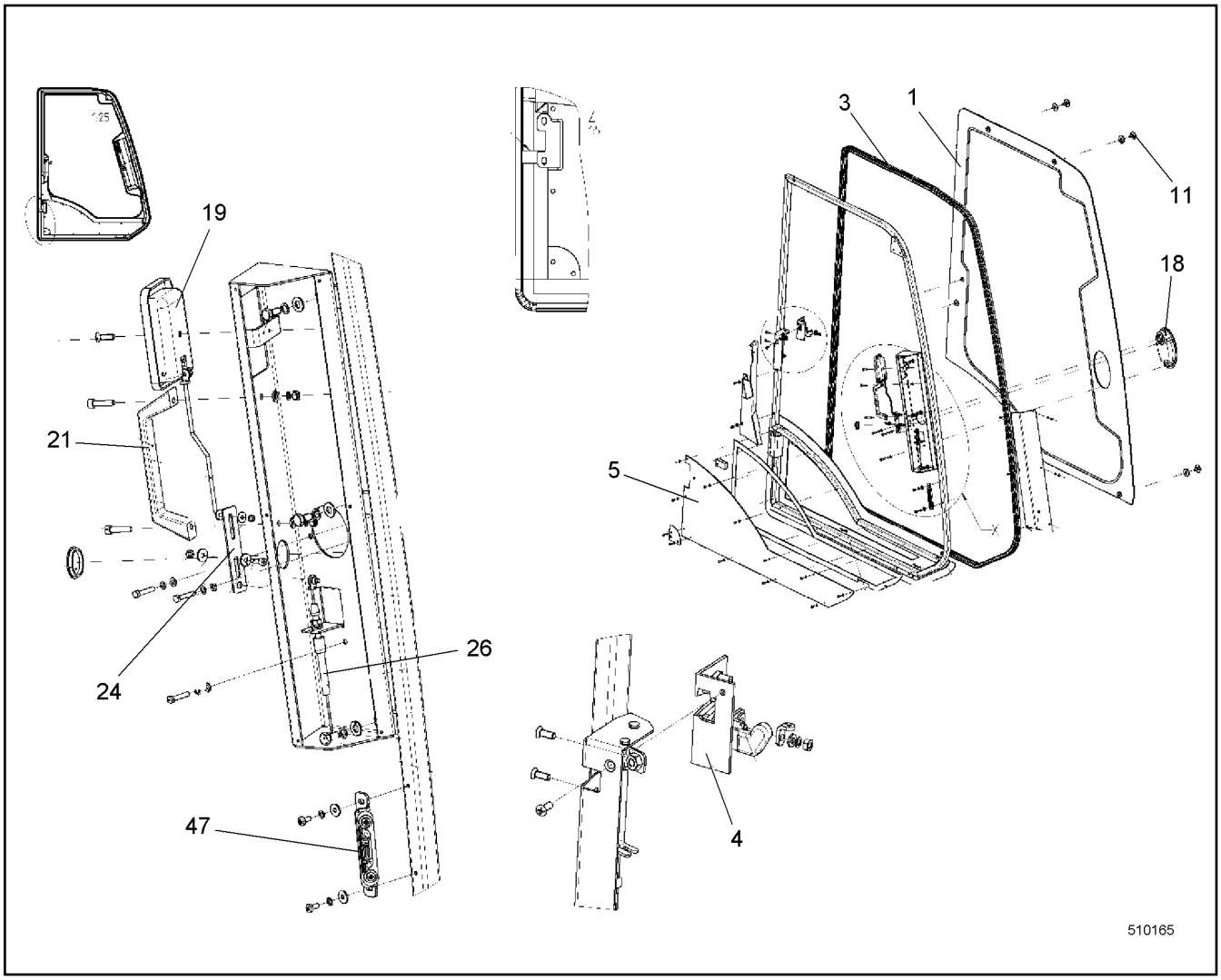

Pos.	Item	Quantity	Description	Bezeichnung	Serie	K
1	10224413	1	SLIDING WINDOW ⇨ ❑ 424	SCHIEBEFENSTER		
3	592285714	1	DOOR SEAL	TUERDICHTUNG		
4	592285814	1	ROTARY LOCK	DREHSCHLOSS		
5	10226479	1	ORIFICE	BLENDE		
11	592286514	5	FITTING	VERSCHRAUBUNG		
18	10226472	1	GRIP SHELL	GRIFFSCHALE		
19	10226473	1	DOOR HANDLE INTERNAL	TUERGRIFF INNEN		
21	10226478	1	DOOR HANDLE INTERNAL	TUERGRIFF INNEN		
24	10226477	1	SHEET	PLATTE		
26	592286314	1	ROPE PULL	SEILZUG		
47	10447258	1	KEY COLLAR	SCHLIESSKEIL		

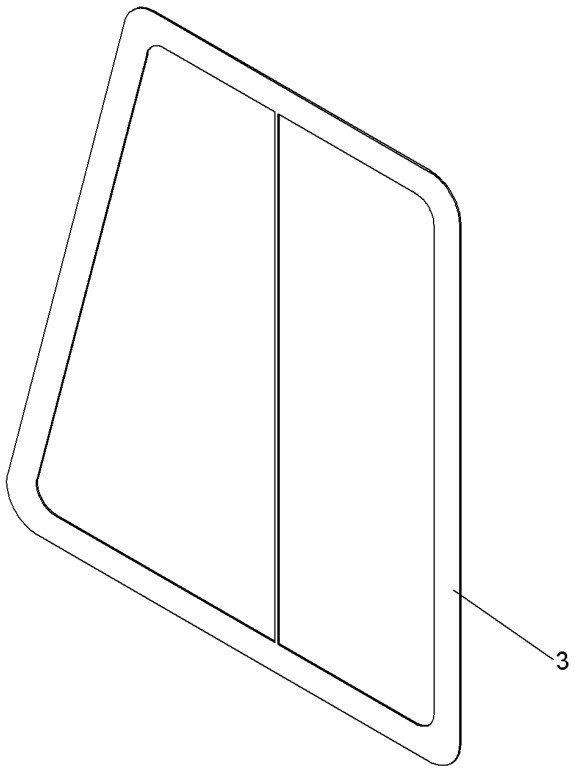

Pos.	Item	Quantity	Description	Bezeichnung	Serie	K
3	11250970	1	SLIDING WINDOW ⇨ ❑ 425	SCHIEBEFENSTER		

OHNE BILD
WITHOUT ILLUSTRATION
SANS PLANCHE
SIN FIG.
SEM ILUSTRAÇÃO
БЕЗ ИЗОБРАЖЕНИЯ

600000

Pos.	Item	Quantity	Description	Bezeichnung	Serie	K
1	10428121	1	GRIP	GRIFF		
2	11250971	1	SEAL	DICHTUNG		

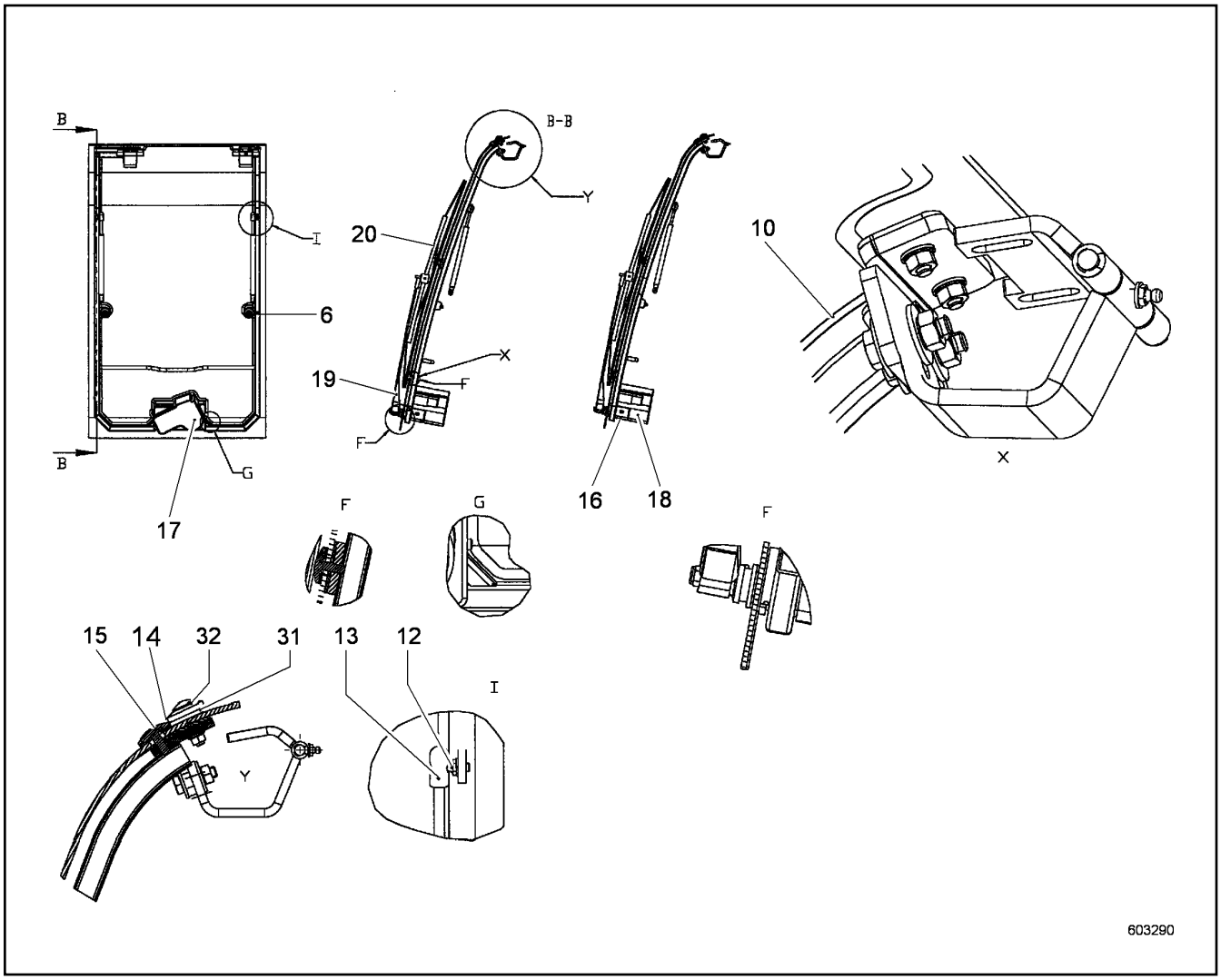

Pos.	Item	Quantity	Description	Bezeichnung	Serie	K
1	11281448	1	FRAME	RAHMEN		
4	10522188	1	WASHER	SCHEIBE		
5	10522190	1	RUBBER	GUMMI		
6	592333714	1	CLOSING PIN	SCHLIESSBOLZEN		
7	10522189	1	SHEET	PLATTE		
10	592287214	1	FRONT WINDOW	FRONTSCHEIBE		
12	592288314	1	BALL PIVOT	KUGELZAPFEN		
13	592287414	1	GAS SPRING	GASFEDER		
14	10226471	1	DISTANCE WASHER	DISTANZSCHEIBE		
15	592287514	1	SCREW	SCHRAUBE		
16	592287614	1	WIPER MOTOR	WISCHERMOTOR		
17	592287714	1	ELBOW PIECE	WINKELSTUECK		
18	592287814	1	COVER	ABDECKUNG		
19	592287914	1	WIPER ARM	WISCHARM		
20	592288014	1	WIPER BLADE	WISCHERBLATT		
31	592288114	1	SHEET GASKET	DICHTSCHEIBE		
32	592288214	1	WASHER	SCHEIBE		

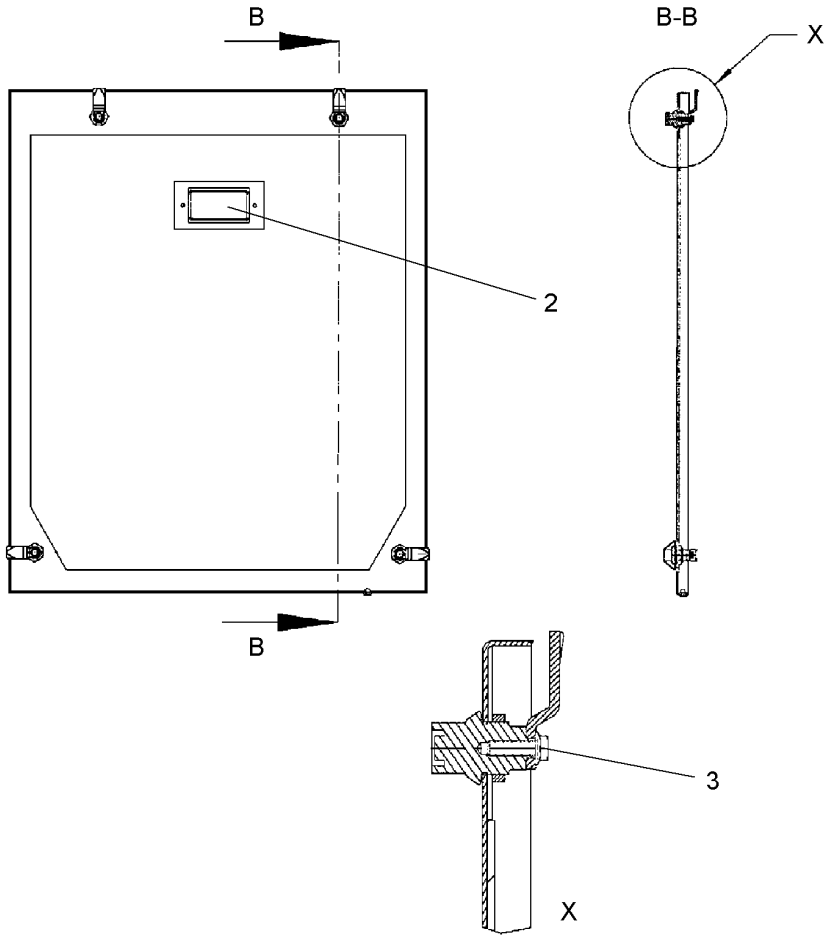

Pos.	Item	Quantity	Description	Bezeichnung	Serie	K
2	592289614	1	GRIP SHELL	GRIFFSCHALE		
3	592289714	1	CYLINDER LOCK	ZYL SCHLOSS		

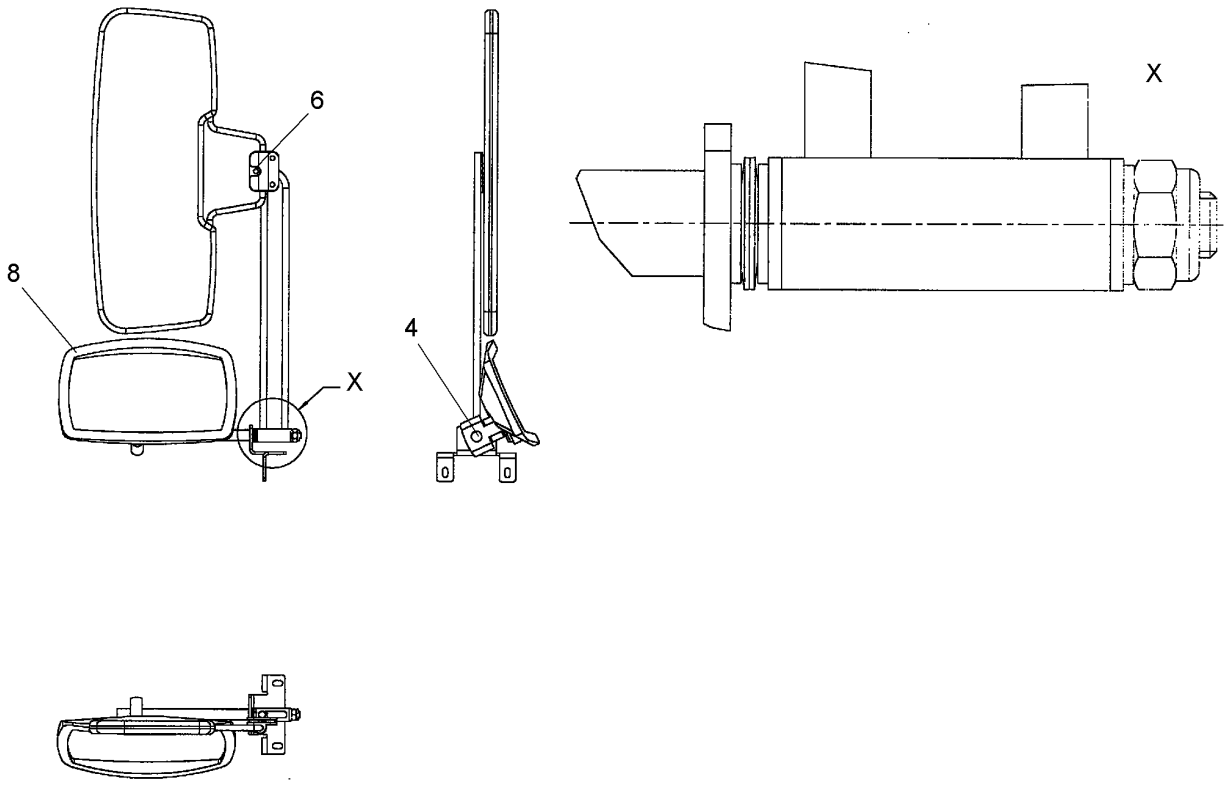

Pos.	Item	Quantity	Description	Bezeichnung	Serie	K
4	592290614	1	COLLER BUSHING	BUNDBUCHSE		
6	592290714	1	SUN VISOR	SONNENBLENDE		
8	592290814	1	MIRROR	SPIEGEL		

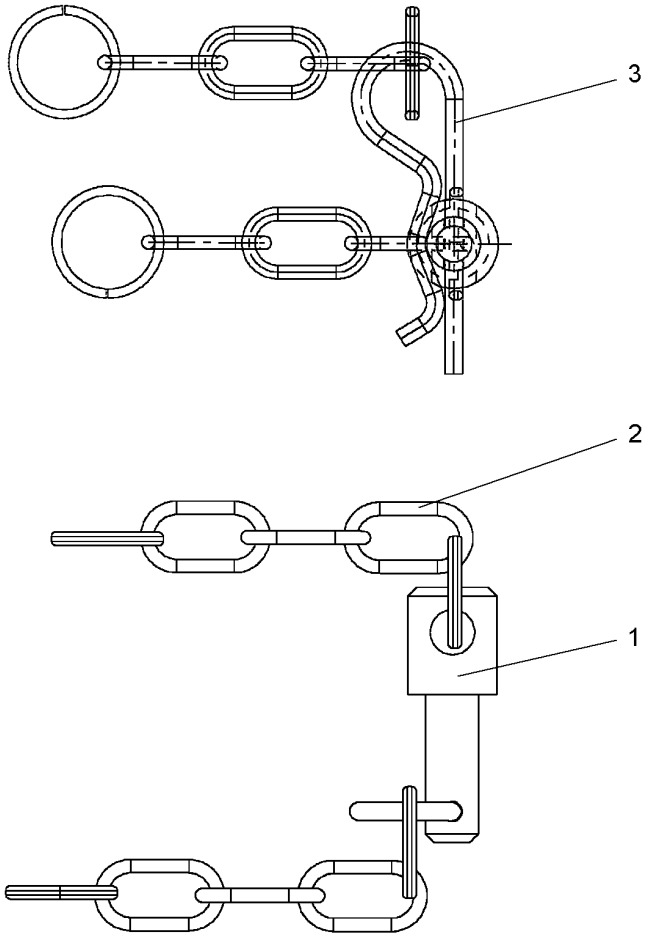

Pos.	Item	Quantity	Description	Bezeichnung	Serie	K
1	592291514	1	PIN	BOLZEN		
2	592291614	1	SECURING CHAIN	SICHERUNGSKETTE		
3	592291714	1	SPRING PLUG	FEDERSTECKER		

OHNE BILD
WITHOUT ILLUSTRATION
SANS PLANCHE
SIN FIG.
SEM ILUSTRAÇÃO
БЕЗ ИЗОБРАЖЕНИЯ

600000

Pos.	Item	Quantity	Description	Bezeichnung	Serie	K
1	11939346	1	AIR CONDITIONING ⇨ ❑ 431	KLIMAANLAGE		
2	11314166	1	TANK MOUNTING	TANKHALTERUNG		

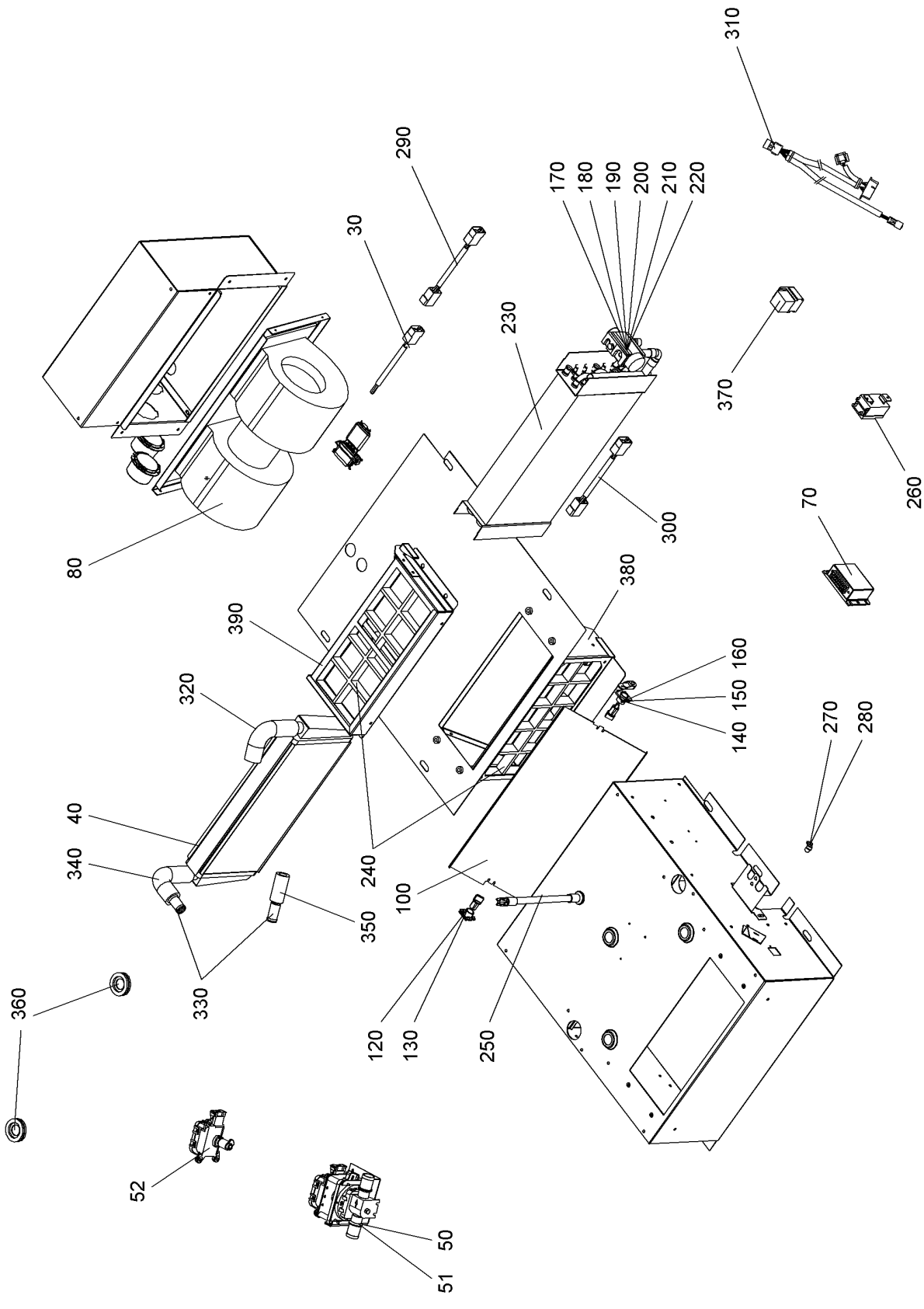
310
290
170
180
190
200
210
220
30
230
370
260
80
300
70
380
390
160
150
140
320
270
280
40
340
240
100
350
330
360
120
130
250
52
50
51
610497

Pos.	Item	Quantity	Description	Bezeichnung	Serie	K
30	10223208	1	CABLE LOOM	KABELSATZ		
40	10512662	1	HEAT EXCHANGER	WAERMETAUSCHER		
50	10584671	1	WATER VALVE ⇨ ❑ 433	WASSERVENTIL		
51	592293114	1	WATER VALVE	WASSERVENTIL		
52	592293214	1	MOTOR	MOTOR		
70	592293314	1	VALVE	VENTIL		
80	10223209	1	FAN	LUEFTER		
100	11909480	1	FLAP	KLAPPE		
120	11909482	1	BEARING	LAGER		
130	11909483	1	CLIP	CLIP		
140	11909496	1	SHEET	PLATTE		
150	11909497	1	CLIP	CLIP		
160	11909498	1	LEVER	HEBEL		
170	10223210	1	EXPANSION VALVE	EXPANSIONSVENTIL		
180	592293414	1	O-RING	O-RING		
190	592293514	1	O-RING	O-RING		
200	11259704	1	HOLDING PLATE	HALTEPLATTE		
210	11259705	1	HOLDING PLATE	HALTEPLATTE		
220	11946452	1	COVER LID	ABDECKKAPPE		
230	592293614	1	EVAPORATOR	VERDAMPFER		
240	592293714	2	FILTER	FILTER		
250	10572149	1	WATER DRAIN CPL	WASSERABLAUF KPL		
260	592293814	1	THERMOSTAT	THERMOSTAT		
270	11230660	1	BOWDEN PULL SYSTEM	BOWDENZUG		
280	11946451	1	CLAMP	KLAMMER		
290	11946453	1	CABLE LOOM	KABELSATZ		
300	11946454	1	CABLE LOOM	KABELSATZ		
310	11946455	1	CABLE LOOM	KABELSATZ		
320	11946456	1	HOSE BEND	SCHLAUCHBOGEN		
330	11946457	1	REDUCER	REDUZIERUNG		
340	11946458	1	HOSE BEND	SCHLAUCHBOGEN		
350	11946459	1	WATER HOSE	WASSERSCHLAUCH		
360	11946462	1	CABLE SLEEVE	KABELTUELLE		
370	11946464	1	CENTER-ZERO RELAY	WECHSLERRELAIS		
380	11946423	1	FAN BOX	LUEFTERKASTEN		
390	11946424	1	AIR FILTER HOLDER	LUFTFILTERHALTER		

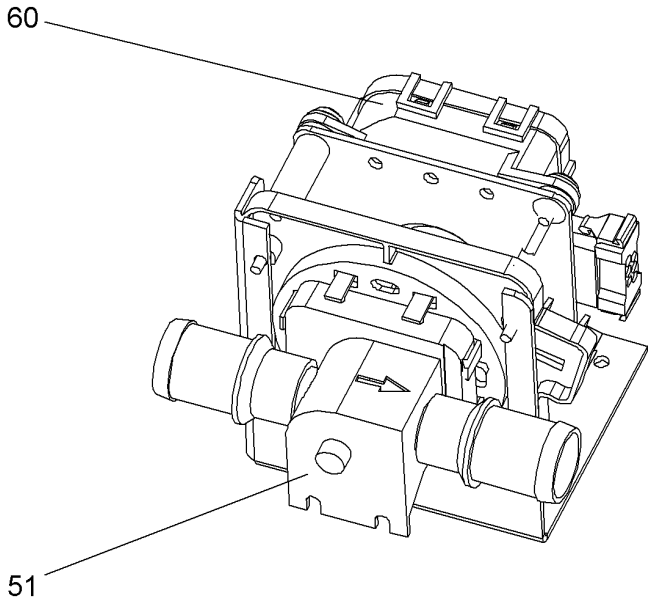

607897

Pos.	Item	Quantity	Description	Bezeichnung	Serie	K
51	592293114	1	WATER VALVE	WASSERVENTIL		
60	592293214	1	MOTOR	MOTOR		

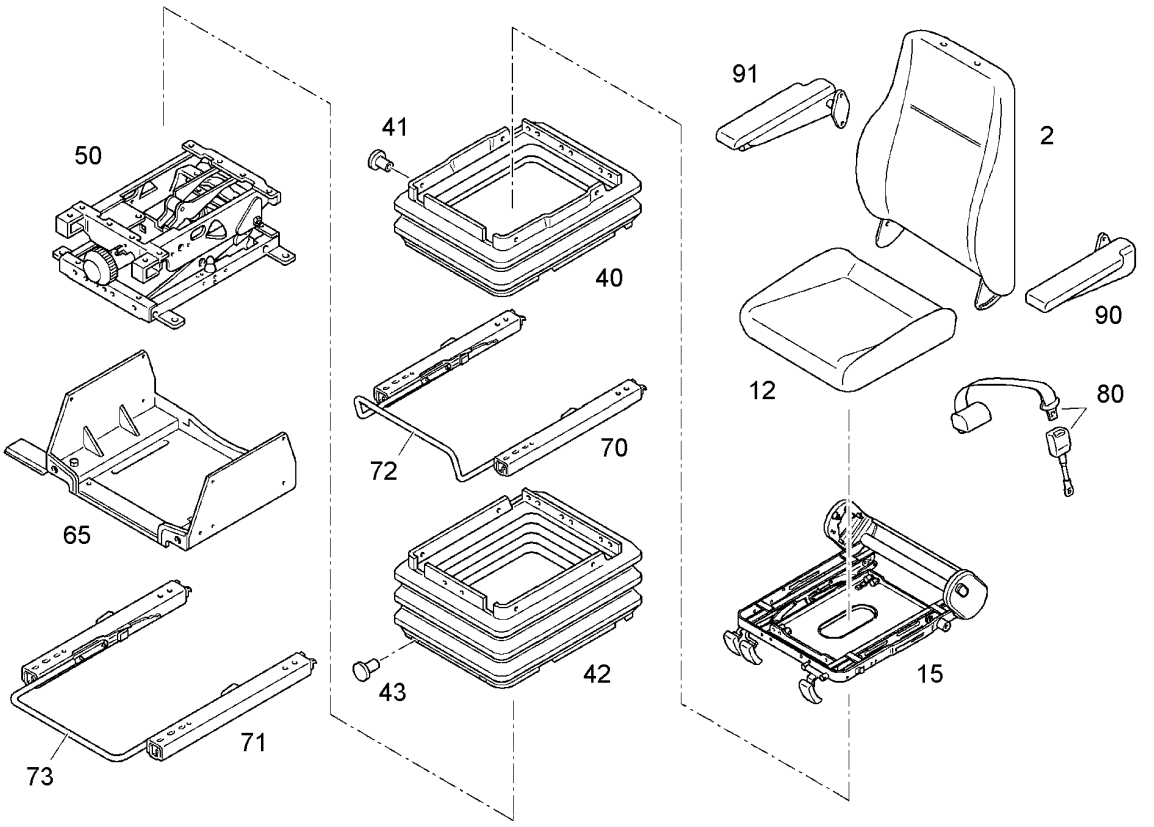

Pos.	Item	Quantity	Description	Bezeichnung	Serie	K
2	10289988	1	BACK PART	RUECKENTEIL		
12	7024981	1	SEAT PART CPL	SITZTEIL KPL		
15	7024996	1	SEAT FRAME ⇨ ❑ 435	SITZRAHMEN		
40	10100666	1	RUBBER BELLOWS	FALTENBALG		
41	10289973	1	FIXING PARTS	BEFESTIGUNGSTEILE		
42	7366620	1	RUBBER BELLOWS	FALTENBALG		
43	10289975	4	BUTTON	KNOPF		
50	10289993	1	VIBRATING SYSTEM ⇨ ❑ 436	SCHWINGSYSTEM		
65	10165637	1	SEAT VAT	SITZWANNE		
70	10289990	1	SLIDE SEAT GUIDE	SCHIEBESITZFUEHRUNG		
71	7024987	1	SLIDE SEAT GUIDE	SCHIEBESITZFUEHRUNG		
72	10289976	1	BRACKET	BUEGEL		
73	7370581	1	BRACKET	BUEGEL		
80	7371746	1	HIP BELT	BECKENGURT		
90	7024982	1	ARM REST LEFT	ARMLEHNE LINKS		
91	7024983	1	ARM REST RIGHT	ARMLEHNE RE		

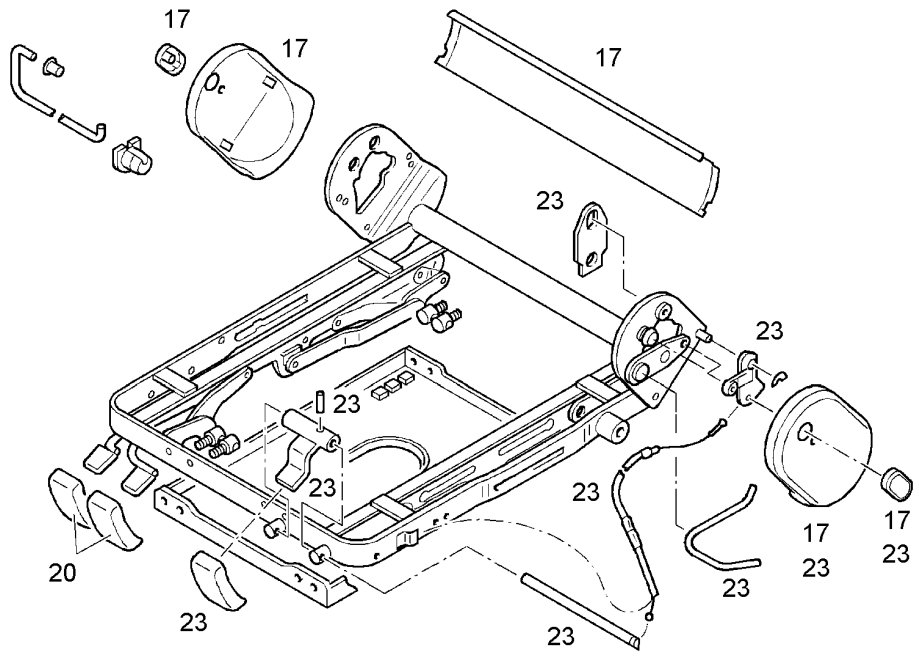

Pos.	Item	Quantity	Description	Bezeichnung	Serie	K
17	10036950	1	COVER LID	ABDECKKAPPE		
20	7025006	1	GRIP	GRIFF		
23	7025007	1	LATCHING DEVICE CPL	RASTVORRICHTUNG KPL		

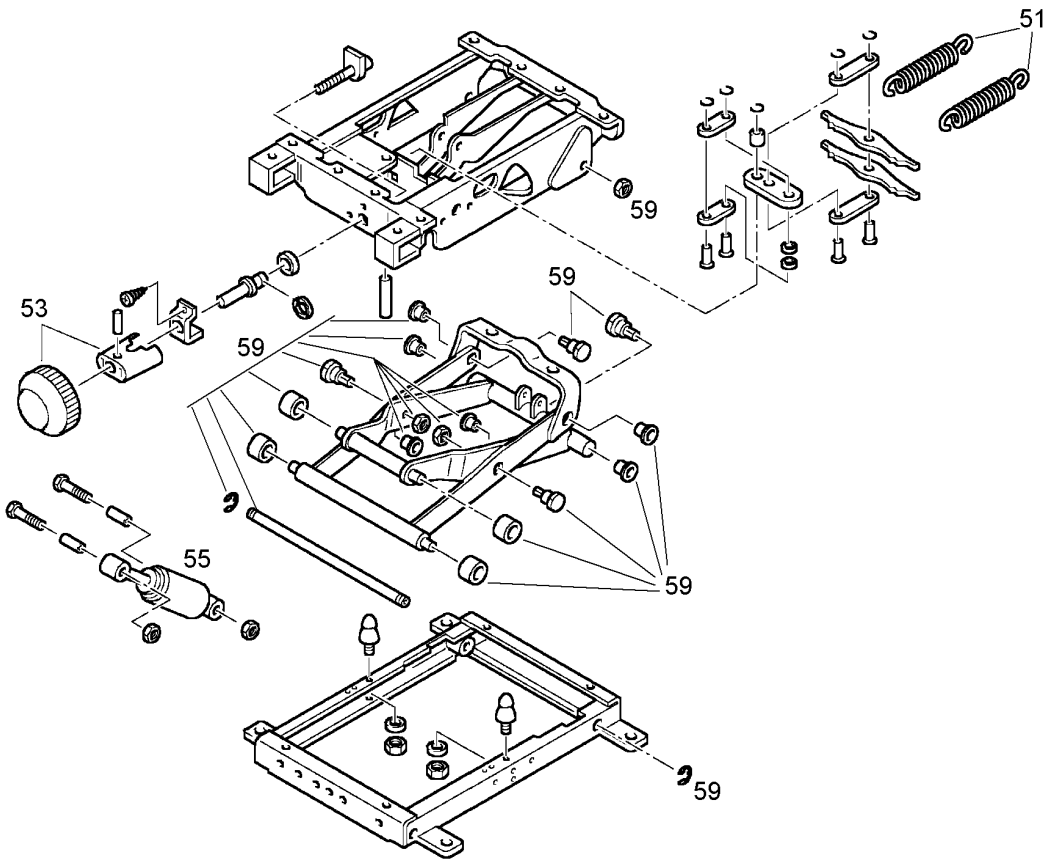

Pos.	Item	Quantity	Description	Bezeichnung	Serie	K
51	7617520	2	TENSION SPRING	ZUGFEDER		
53	5609144	1	HANDWHEEL	HANDRAD		
55	10289994	1	SHOCK ABSORBER	STOSSDAEMPFER		
59	7025009	1	BEARING	SCHERENLAGERUNG		

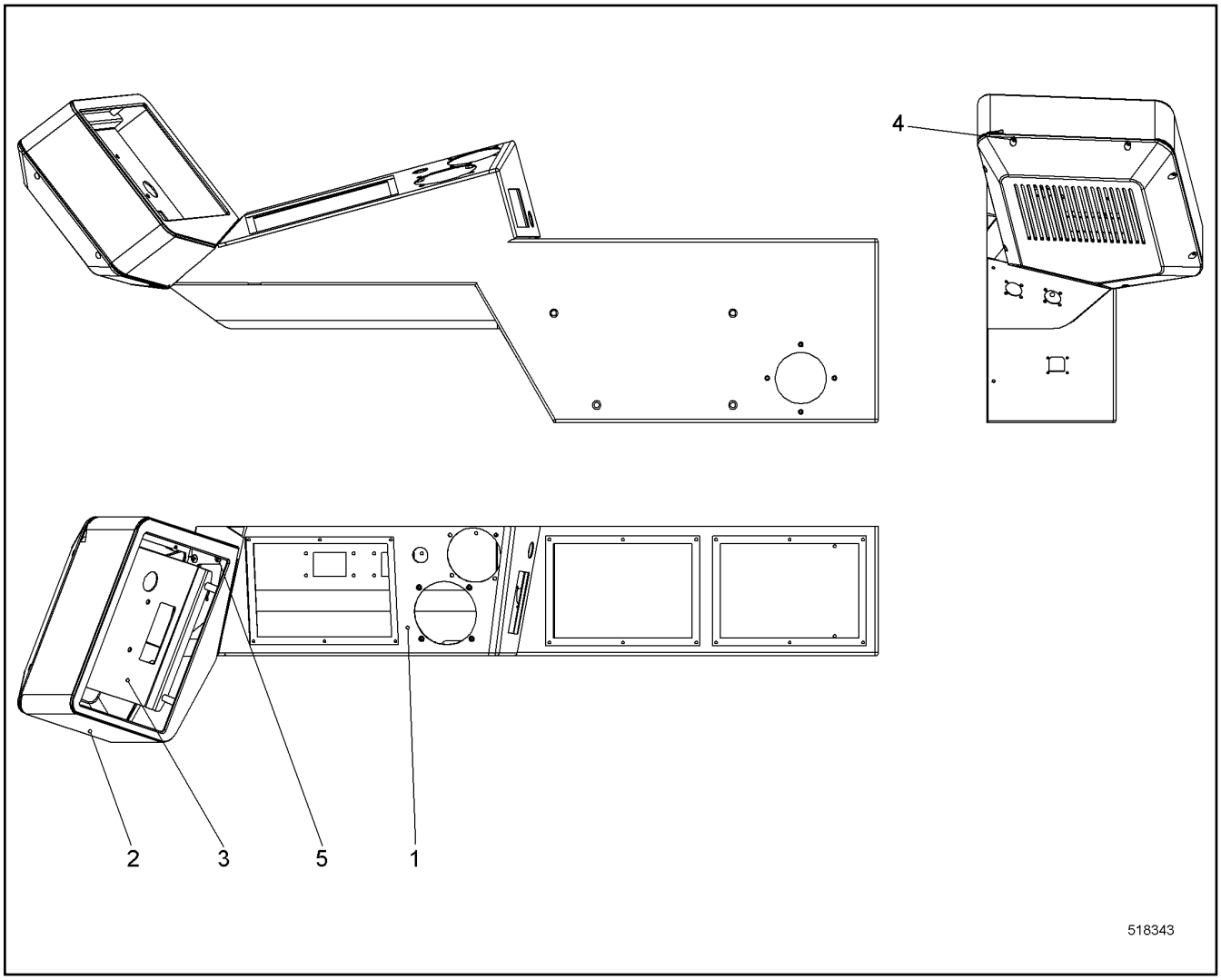

Pos.	Item	Quantity	Description	Bezeichnung	Serie	K
1	11262893	1	BRACKET REAR	KONSOLE HINTEN		
2	11262812	1	MONITOR SCREEN HOUSING	BILDSCHIRMGEHAEUSE		
3	11262894	1	HOLDER	HALTER		
4	10541540	11	PAN-HEAD SCREW ISO 7045 M4X6 A2-70	FLACHKOPFSCHRAUBE		
5	4002401	4	COUNTERSUNK SCREW ISO 7047 M6X12 4.8	SENKSCHRAUBE		

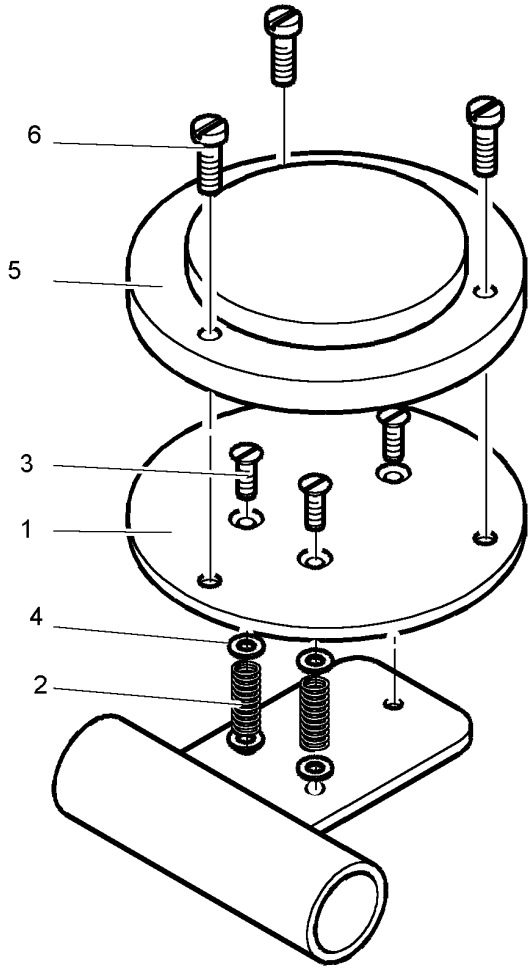

503383

Pos.	Item	Quantity	Description	Bezeichnung	Serie	K
2	411551214	9	HEX NUT ISO 4032 M4 A4-70	SECHSKANTMUTTER		
3	407041214	3	COUNTERSUNK SCREW ISO 2009 M4X25 4.8	SENKSCHRAUBE		
4	420000314	3	WASHER ISO 7089 4 A4	SCHEIBE		
5	714000808	1	SPIRIT LEVEL	WASSERWAAGE		
6	10541561	3	PAN-HEAD SCREW ISO 7045 M5X16 A2-70	FLACHKOPFSCHRAUBE		

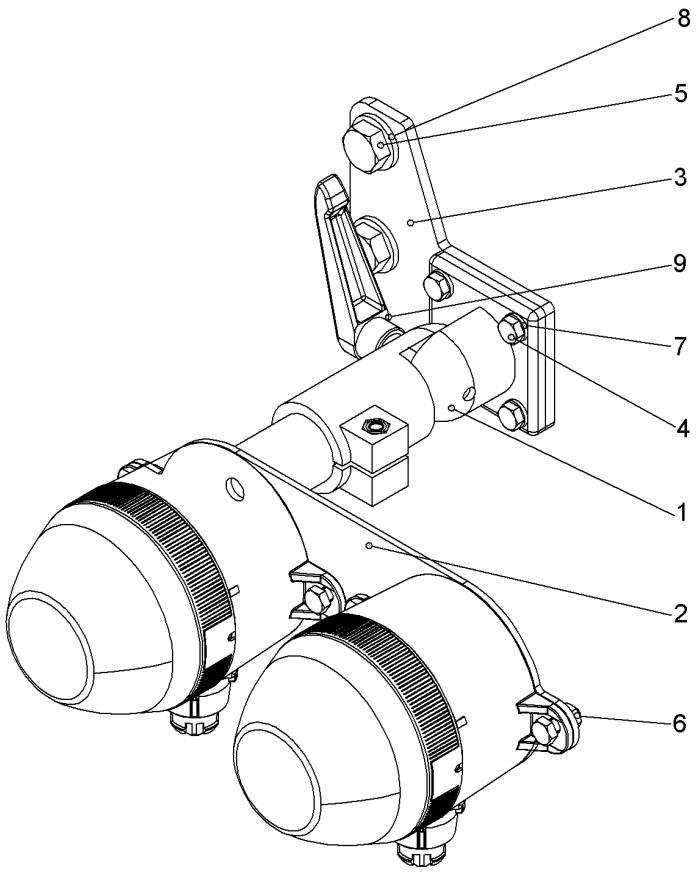

Pos.	Item	Quantity	Description	Bezeichnung	Serie	K
1	10537558	1	TERMINAL HOLDER B30	KLEMMHALTER		
2	10537562	1	LAMP HOLDER	LEUCHTENHALTER		
3	10537566	1	WP	WP		
4	406501714	8	HEX SCREW ISO 4017 M6X16 A4-70	SECHSKANTSCHRAUBE		
5	406528014	2	HEX SCREW ISO 4017 M12X16 A4-70	SECHSKANTSCHRAUBE		
6	411517114	4	HEX NUT ISO 4032 M6 A4-70	SECHSKANTMUTTER		
7	420000414	8	WASHER ISO 7089 6 A4	SCHEIBE		
8	4901782	2	WASHER ISO 7089 12 A4	SCHEIBE		
9	10555411	1	CLAMPING LEVER	KLEMMHEBEL		

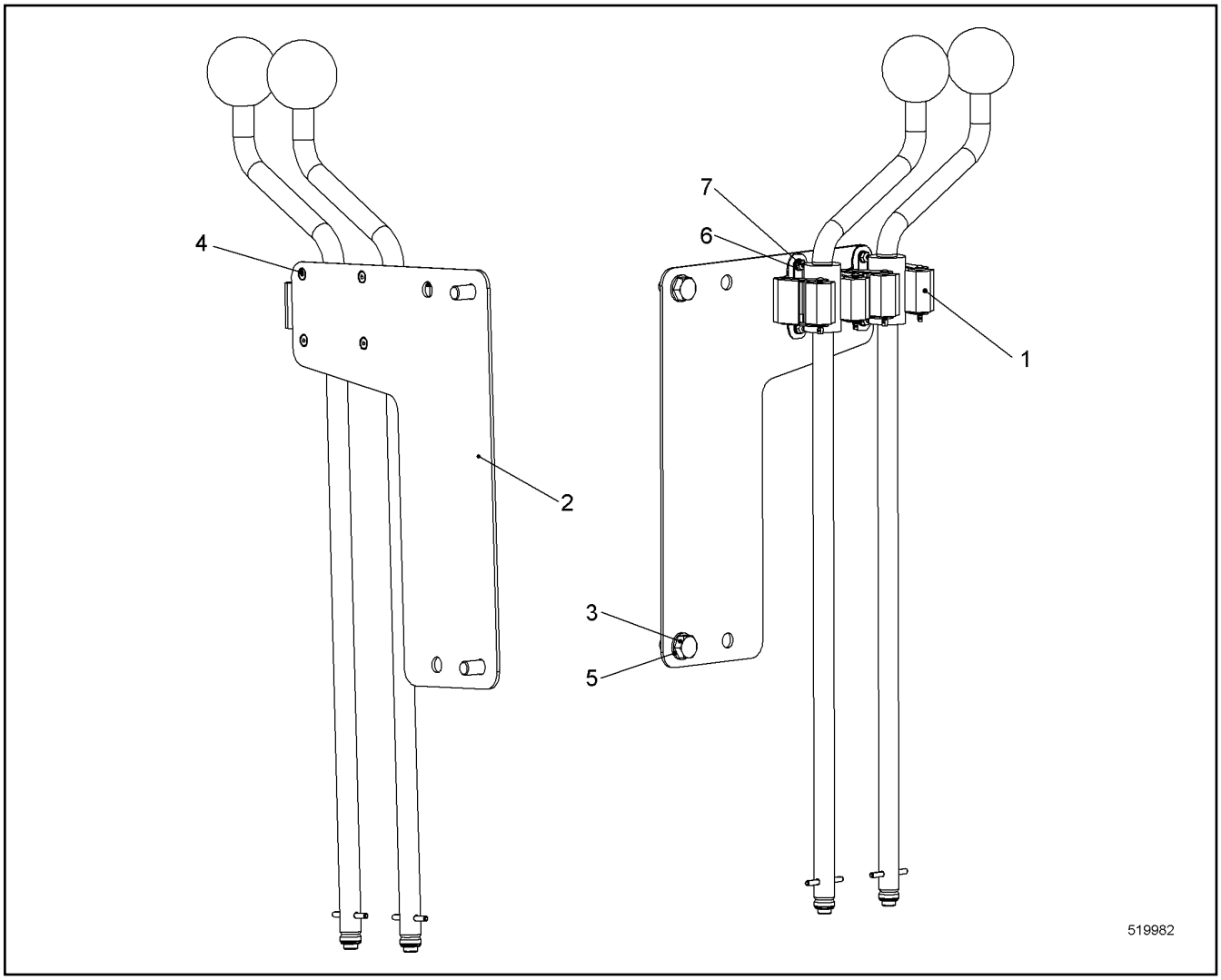

Pos.	Item	Quantity	Description	Bezeichnung	Serie	K
1	10445629	2	EQUIPMENT MOUNTING	GERAETEHALTER		
2	11309628	1	WP	WP		
3	406501514	2	HEX SCREW ISO 4017 M8X16 A4-70	SECHSKANTSCHRAUBE		
4	407071114	4	COUNTERSUNK SCREW DIN 7991 M3X8 A4-7	SENKSCHRAUBE		
5	420001014	2	WASHER ISO 7089 8 A4	SCHEIBE		
6	485546414	4	WASHER ISO 7089 3 A4	SCHEIBE		
7	485546514	4	HEX NUT ISO 4032 M3 A4-70	SECHSKANTMUTTER		

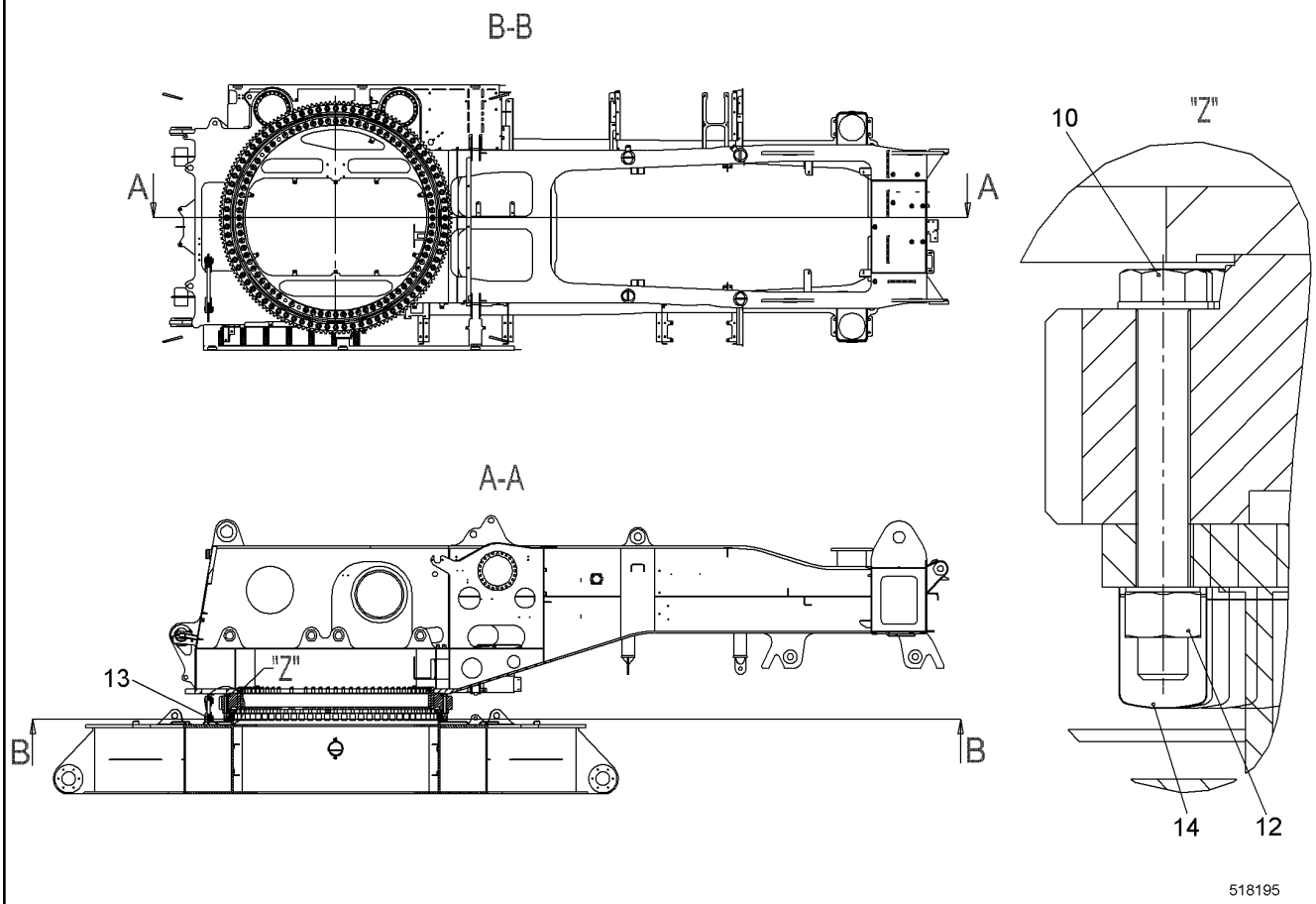

Pos.	Item	Quantity	Description	Bezeichnung	Serie	K
10	10512966	80	FLANGED BOLT M33X245 10.9	BUNDSCHRAUBE		
12	412705014	80	NUT LWN 8-60-106 M33 10	MUTTER		
13	991804114	1	LASHING SUPERSTRUCTURE ⇨ ❑ 442	VERZURRUNG OW		
14	11266978	80	PROTECTING CAP	SCHUTZKAPPE		

LR1280 / LR1300

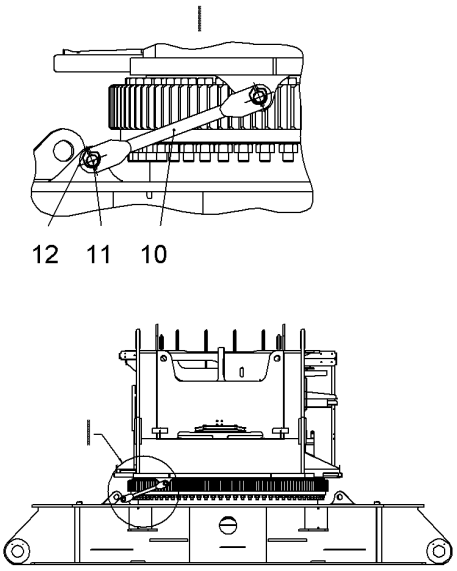

LR1300 / LR1300W

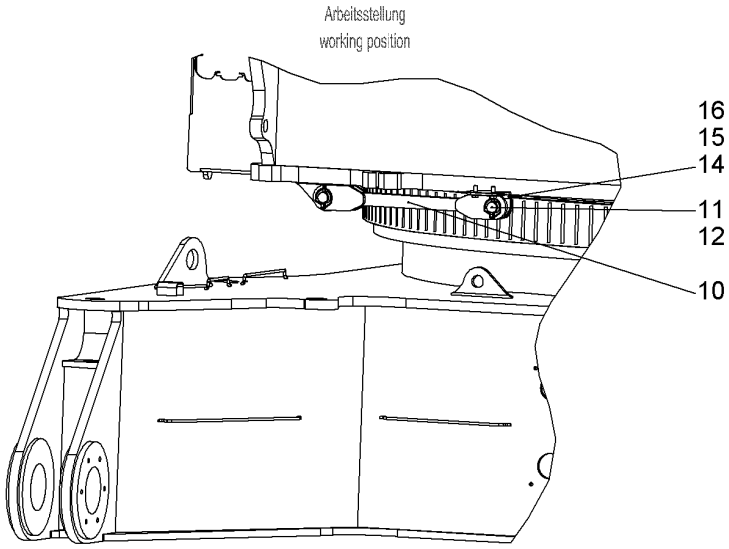

519291

Pos.	Item	Quantity	Description	Bezeichnung	Serie	K
10	953580303	1	BUTT STRAP	LASCHE		
11	11938016	2	PIN 50X95 LHRD900-40;10019758	BOLZEN		
12	10098106	2	SAFETY PLUG W HINGE-LID 10X55	SICHERHEITSKLAPPSTECKER		
14	10540512	2	WASHER ISO 7093-1 12 A4	SCHEIBE		
15	406517314	2	HEX SCREW ISO 4017 M12X30 A4-70	SECHSKANTSCHRAUBE		

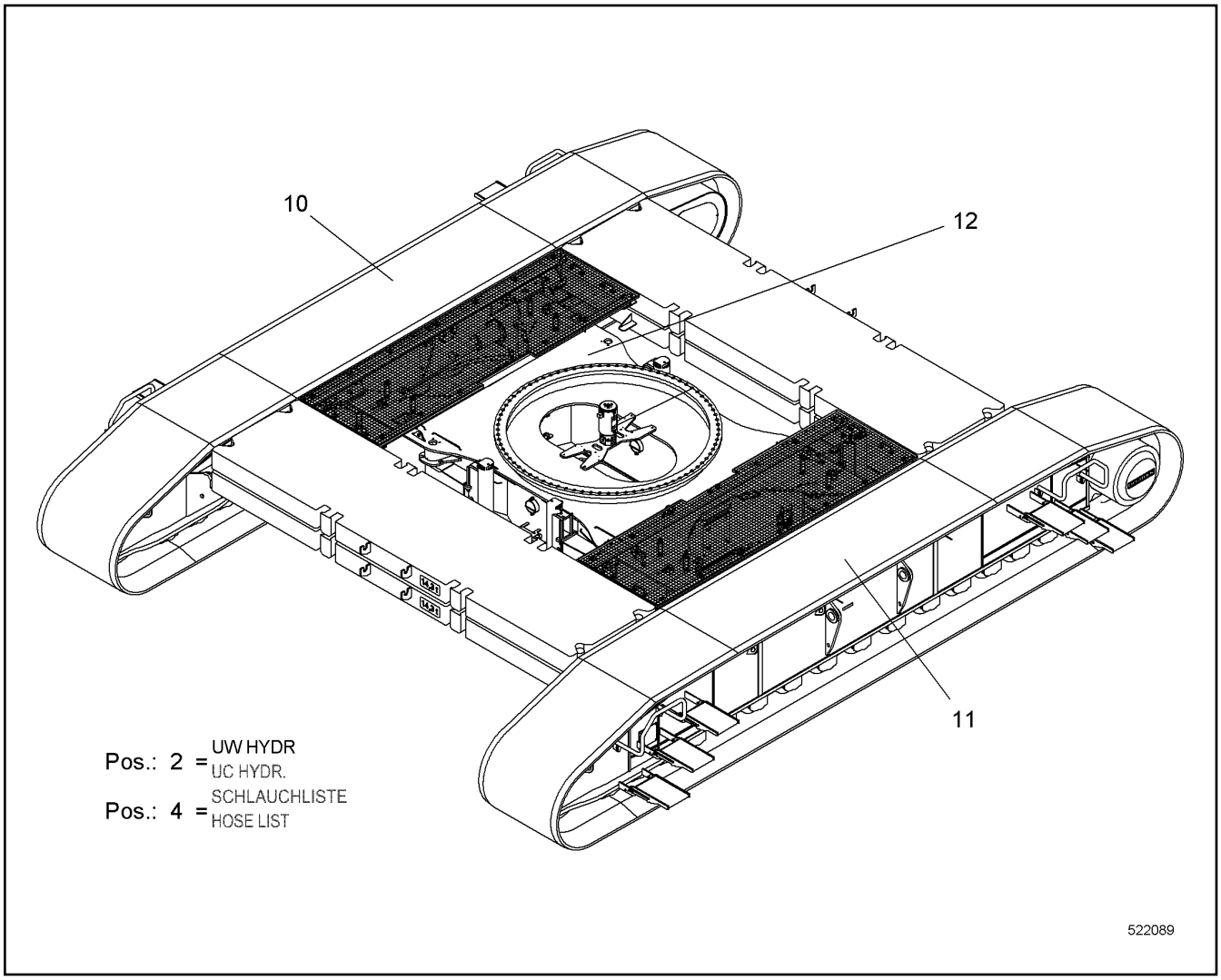

Pos.	Item	Quantity	Description	Bezeichnung	Serie	K
2	11893003	1	UC HYDR ⇨ ❑ 444	UW HYDR		
4	11893001	1	HOSE LIST ⇨ ❑ 463	SCHLAUCHLISTE		
10	11893650	1	CRAWLER CARRIER RIGHT CPL ⇨ ❑ 466	RAUPENTRAEGER RE KPL		
11	11893651	1	CRAWLER CARRIER LEFT CPL ⇨ ❑ 477	RAUPENTRAEGER LI KPL		
12	11313908	1	CENTRE PART CPL ⇨ ❑ 479	MITTELTEIL KPL		
13	289059414	1	WP	WP		

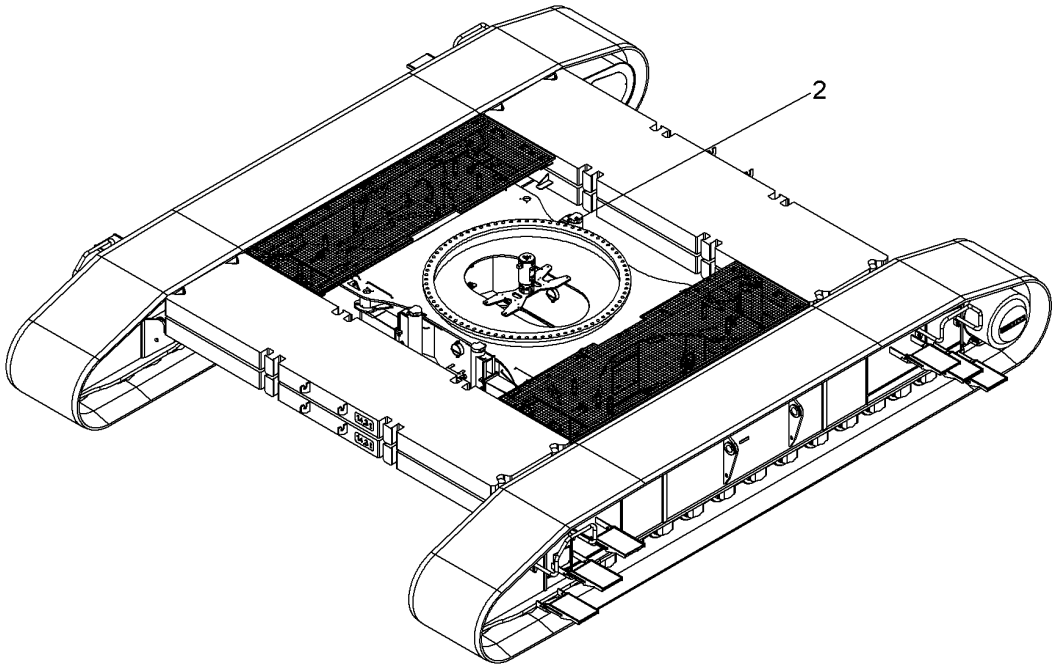

Pos.	Item	Quantity	Description	Bezeichnung	Serie	K
2	11893005	1	TUBING HYDR ⇨ ❑ 445	VERROHRUNG HYDR		

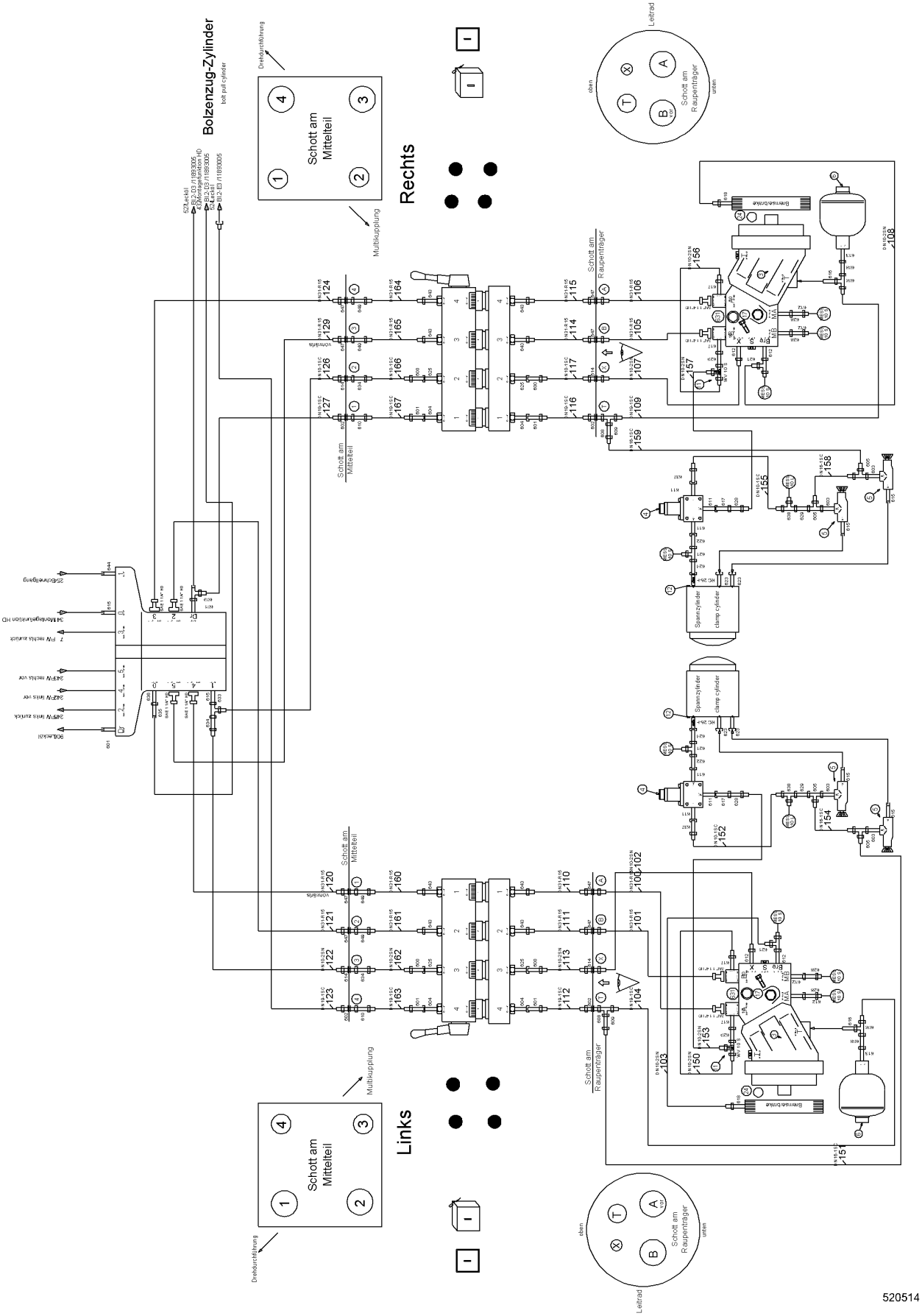
Bolzenzug-Zylinder
bolt pull-cylinder
Rechts
Links
Schott am Mittelteil
Schott am Raupenträger
Drehdurchführung
Multikupplung
Leitrad
oben
unten
Spannzylinder
clamp cylinder
520514

Pos.	Item	Quantity	Description	Bezeichnung	Serie	K
2	10550970	1	ROTARY FEED THROUGH HYDR ⇨ ❑ 449	DREHDURCHFUEHRUNG HYDR		
3	512405914	2	VARIABLE DISPLACEMENT MOTOR ⇨ ❑ 451	V.MOTOR		
4	510438514	2	PRESSURE REDUCTION VALVE	DRUCKREDUZIERVENTIL		
5	592323114	4	PRESSURE LIMITING VALVE	DRUCKBEGRENZUNGSVENTIL		
6	592274714	2	DIAPHRAGM ACCUMULATOR	MEMBRANSPEICHER		
7	10445102	1	QUICK RELEASE FITTING ⇨ ❑ 457	SCHNELLVERSCHLUSSKUPPLUN		
8	10445101	1	QUICK RELEASE FITTING ⇨ ❑ 458	SCHNELLVERSCHLUSSKUPPLUN		
9	10551548	2	QUICK RELEASE FITTING ⇨ ❑ 459	SCHNELLVERSCHLUSSKUPPLUN		
10	510710614	4	INTERMEDIATE FLANGE SAE	ZWISCHENFLANSCH SAE		
11	511491914	2	SHUTTLE VALVE	WECHSELVENTIL		
12	10099055	2	NON-RETURN VALVE	RUECKSCHLAGVENTIL		
13	513314114	4	DOUBLE-ACTING CYL ⇨ ❑ 460	DOPPELWIRKZYL		
14	510403414	4	DIRECTIONAL CTRL. VALVE	WEGESCHIEBER		
16	511458114	4	NON-RETURN VALVE	RUECKSCHLAGVENTIL		
17	10539305	8	HEX SCREW ISO 4017 M14X70 10.9	SECHSKANTSCHRAUBE		
18	10544050	16	SOCKET HEAD SCREW ISO 4762 M14X75 10.9	ZYLINDERSCHRAUBE		
19	10539300	16	HEX SCREW ISO 4017 M14X45 10.9	SECHSKANTSCHRAUBE		
20	10445127	2	ENCLOSURE CPL	GEHAEUSE KPL		
21	10551191	2	LID CPL ⇨ ❑ 461	DECKEL KPL		
22	247049002	1	FITTING	VERSCHRAUBUNG		
23	477700214	1	FITTING	VERSCHRAUBUNG		
24	726461014	2	O-RING	O-RING		
25	11918725	2	CHAIN CPL ⇨ ❑ 462	KETTE KPL		
204	510694514	8	GAUGE CONNECTION	MESSSTUTZEN		
205	510629008	2	GAUGE CONNECTION	MESSSTUTZEN		
600	471032708	24	FITTING	VERSCHRAUBUNG		
601	247009902	6	FITTING	VERSCHRAUBUNG		
602	247027302	4	FITTING	VERSCHRAUBUNG		
603	247009702	4	FITTING	VERSCHRAUBUNG		
604	475501414	4	FITTING	VERSCHRAUBUNG		
605	247128502	4	FITTING	VERSCHRAUBUNG		
606	482430614	2	FITTING	VERSCHRAUBUNG		
608	247041102	4	FITTING	VERSCHRAUBUNG		
609	247138602	4	FITTING	VERSCHRAUBUNG		
610	247126202	3	FITTING	VERSCHRAUBUNG		
611	247042402	6	FITTING	VERSCHRAUBUNG		
612	471008214	8	FITTING	VERSCHRAUBUNG		
613	247011602	2	FITTING	VERSCHRAUBUNG		
614	474002414	4	FITTING	VERSCHRAUBUNG		
615	471032608	6	FITTING	VERSCHRAUBUNG		

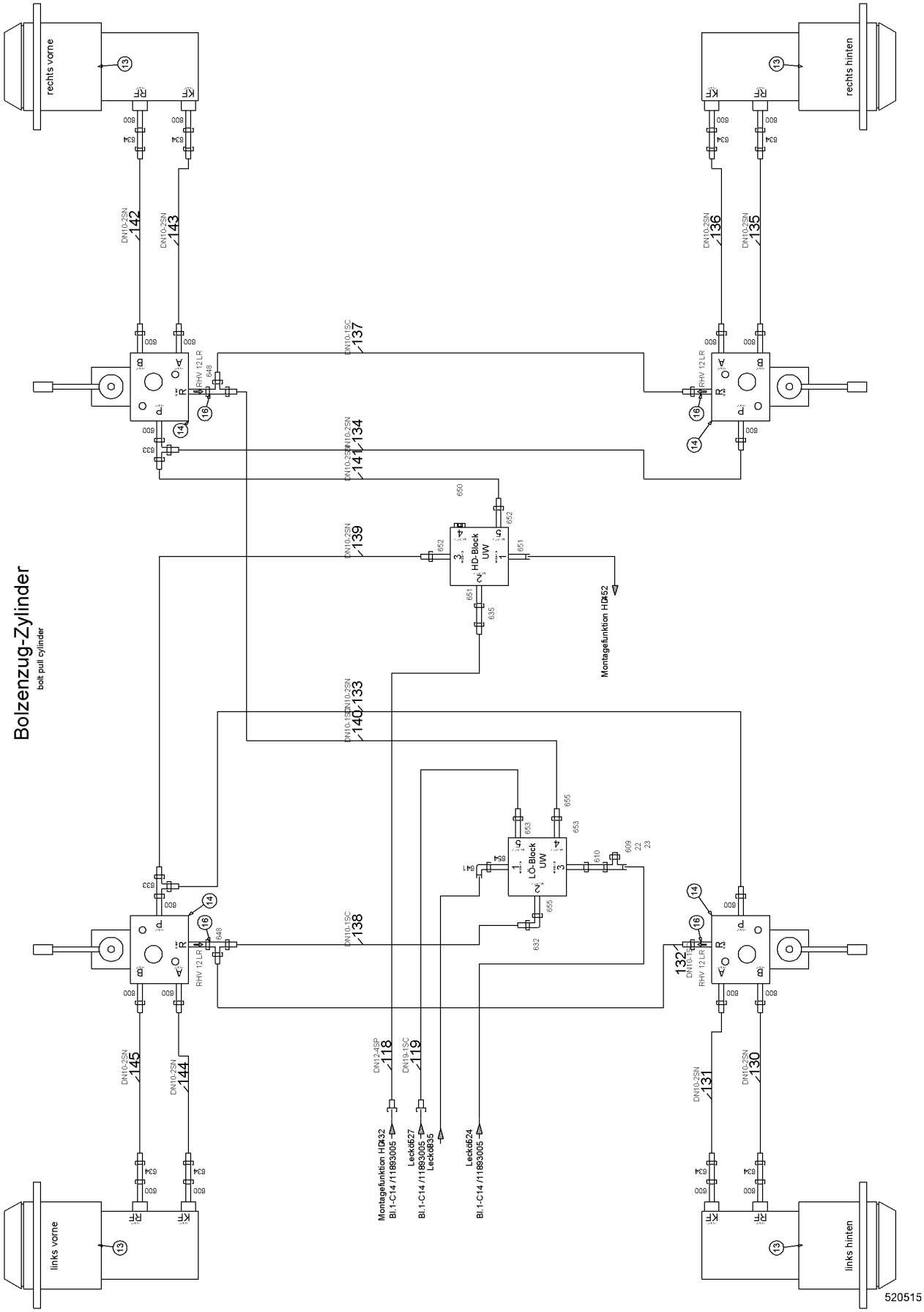

24.5.2017 520515	**138376_ETK_001**	447 (3/4)
LIEBHERR	**TUBING HYDR** **VERROHRUNG HYDR**	**11 89 300 5**

Pos.	Item	Quantity	Description	Bezeichnung	Serie	K
616	471031308	2	FITTING	VERSCHRAUBUNG		
617	471004514	6	FITTING	VERSCHRAUBUNG		
618	471004614	2	FITTING	VERSCHRAUBUNG		
620	471100614	2	FITTING	VERSCHRAUBUNG		
621	7367776	4	FITTING	VERSCHRAUBUNG		
622	471032808	2	FITTING	VERSCHRAUBUNG		
623	481933014	4	FITTING	VERSCHRAUBUNG		
624	481930414	2	FITTING	VERSCHRAUBUNG		
625	475502514	4	FITTING	VERSCHRAUBUNG		
628	7617268	6	FITTING	VERSCHRAUBUNG		
629	485436414	2	FITTING	VERSCHRAUBUNG		
631	10472425	10	RECTANGULAR SECTION RING	RECHTECKRING		
632	247117702	1	FITTING	VERSCHRAUBUNG		
633	7617461	3	FITTING	VERSCHRAUBUNG		
634	7617354	11	FITTING	VERSCHRAUBUNG		
635	7617460	2	FITTING	VERSCHRAUBUNG		
636	471033214	1	FITTING	VERSCHRAUBUNG		
637	7362091	2	FITTING	VERSCHRAUBUNG		
638	247242302	2	FITTING	VERSCHRAUBUNG		
641	247108302	1	FITTING	VERSCHRAUBUNG		
643	7410455	8	FITTING	VERSCHRAUBUNG		
644	247009202	1	FITTING	VERSCHRAUBUNG		
646	510586614	16	FLANGE HALF	FLANSCHHAELFTE		
647	474033014	8	FITTING	VERSCHRAUBUNG		
648	247128602	2	FITTING	VERSCHRAUBUNG		
649	482531814	4	FITTING	VERSCHRAUBUNG		
650	477704514	1	FITTING	VERSCHRAUBUNG		
651	471033014	2	FITTING	VERSCHRAUBUNG		
652	471036014	2	FITTING	VERSCHRAUBUNG		
653	7365616	2	FITTING	VERSCHRAUBUNG		
654	471031108	1	FITTING	VERSCHRAUBUNG		
655	471039908	2	FITTING	VERSCHRAUBUNG		

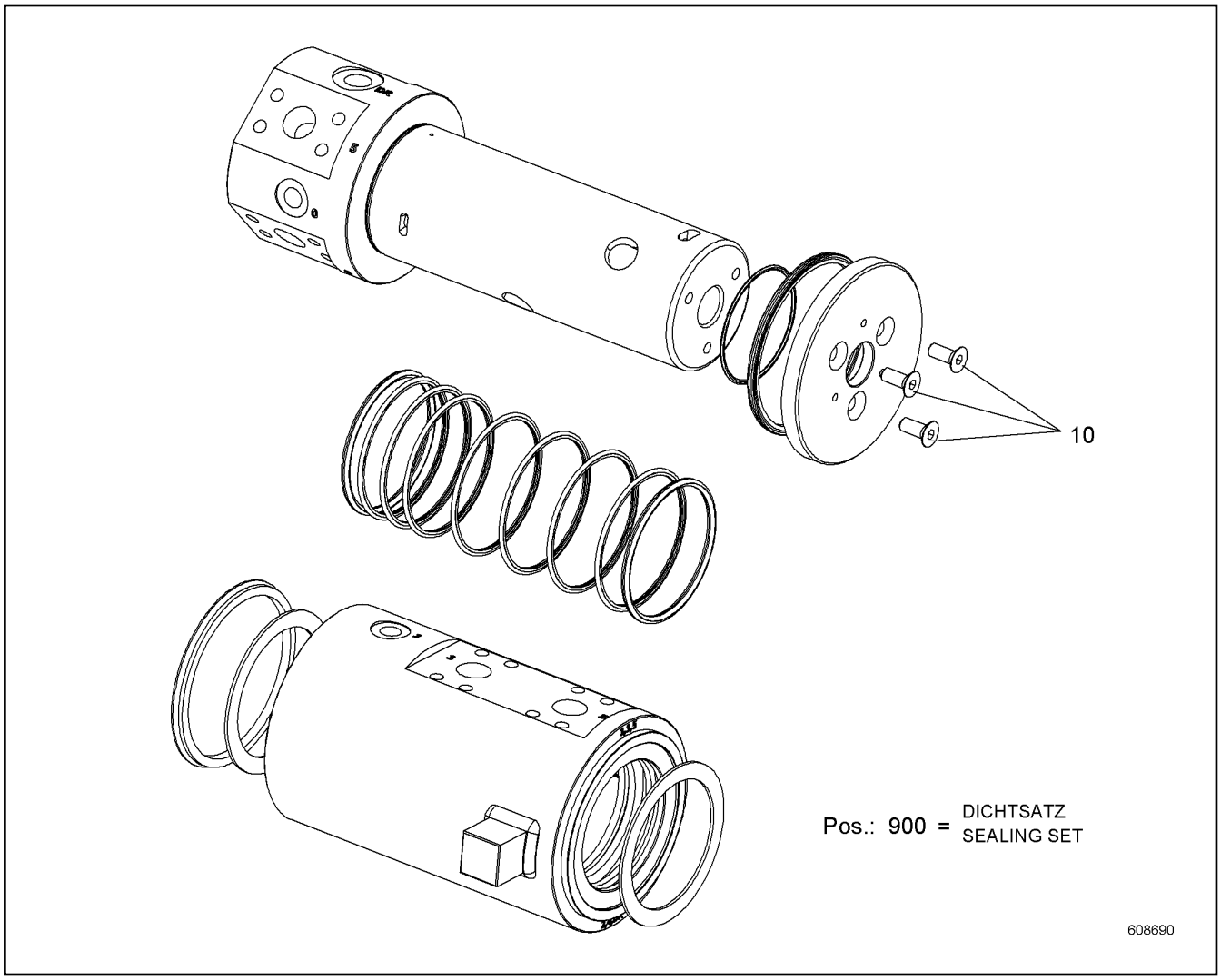

Pos.	Item	Quantity	Description	Bezeichnung	Serie	K
10	11249772	3	SCREW M12X30	SCHRAUBE		
900	11896178	1	SEALING SET ⇨ ❑ 450	DS		

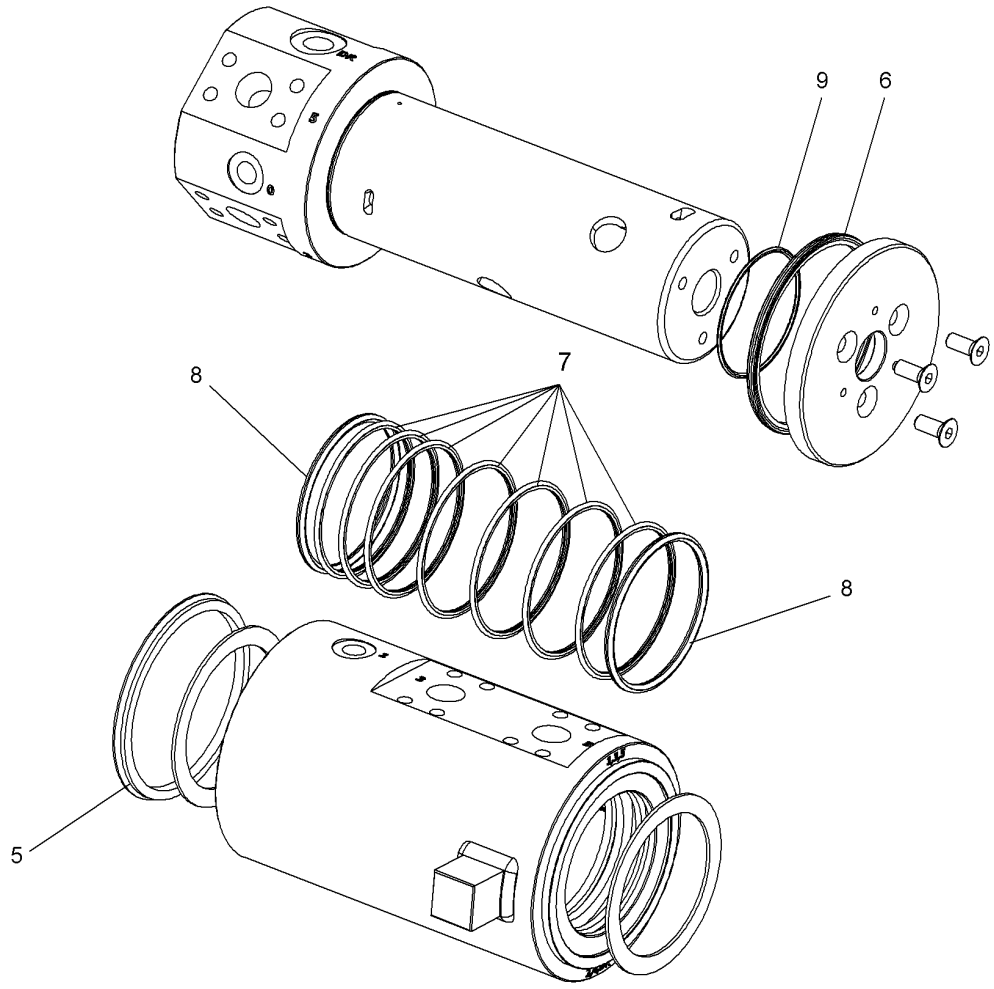

Pos.	Item	Quantity	Description	Bezeichnung	Serie	K
5	11251437	1	V-RING	V-RING		
6	11251434	1	SEAL	DICHTUNG		
7	11253456	7	LIFETIME SEAL	GLEITDICHTRING		
8	11251423	2	O-RING	O-RING		
9	11249804	1	O-RING	O-RING		

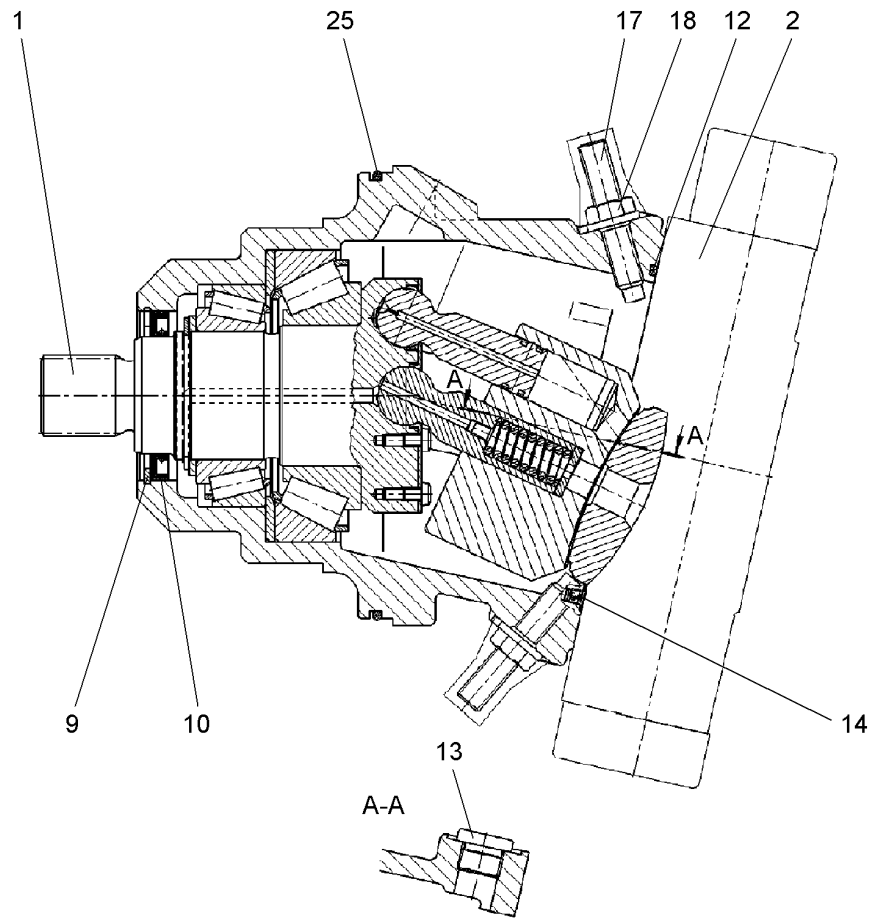

Pos.	Item	Quantity	Description	Bezeichnung	Serie	K
1	10503513	1	DRIVING GEAR ⇨ ❑ 452	TRIEBWERK		
2	11224738	1	ADJUSTMENT ⇨ ❑ 454	VERSTELLUNG		
9	10598700	1	LOCKING RING	SICHERUNGSRING		
10	790563914	1	SHAFT SEAL	WELLENDICHTRING		
12	726459414	1	O-RING	O-RING		
13	10503477	1	SCREW PLUG M26X1.5	VERSCHLUSSSCHRAUBE		
14	7022118	1	O-RING	O-RING		
17	7373597	2	GRUB SCREW	GEWINDESTIFT		
18	7005072	2	SEALING NUT M12X1.75	DICHTMUTTER		
25	11224740	1	O-RING	O-RING		

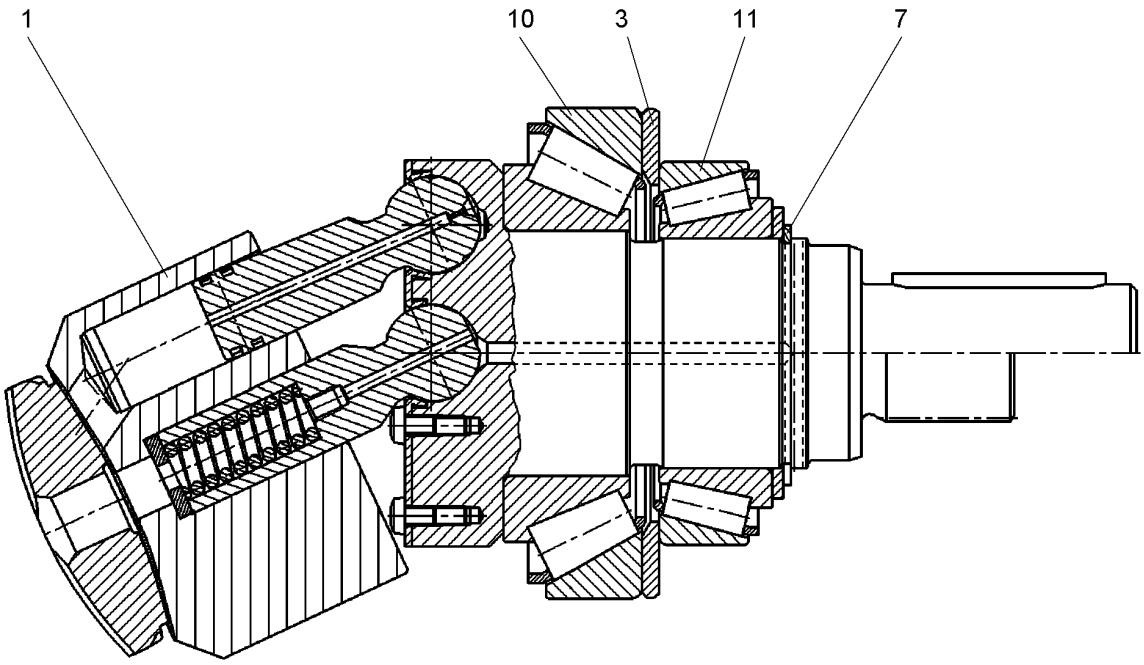

Pos.: 98 = DS ANTRIEBSWELLE
SEAL KIT DRIVE SHAFT

610760

Pos.	Item	Quantity	Description	Bezeichnung	Serie	K
1	10007947	1	HYDRAULIC PARTS DRIVING GEAR ⇨ ❑ 453	TRIEBWERK HYDRAULIKTEIL		
3	10007971	1	SHIM RING	PASSSCHEIBE		
7	11214714	1	LOCKING RING	SICHERUNGSRING		
10	11214718	1	TAPERED ROLLER BEARING	KEGELROLLENLAGER		
11	11214719	1	TAPERED ROLLER BEARING	KEGELROLLENLAGER		
98	512416214	1	SEAL KIT DRIVE SHAFT	DS ANTRIEBSWELLE		

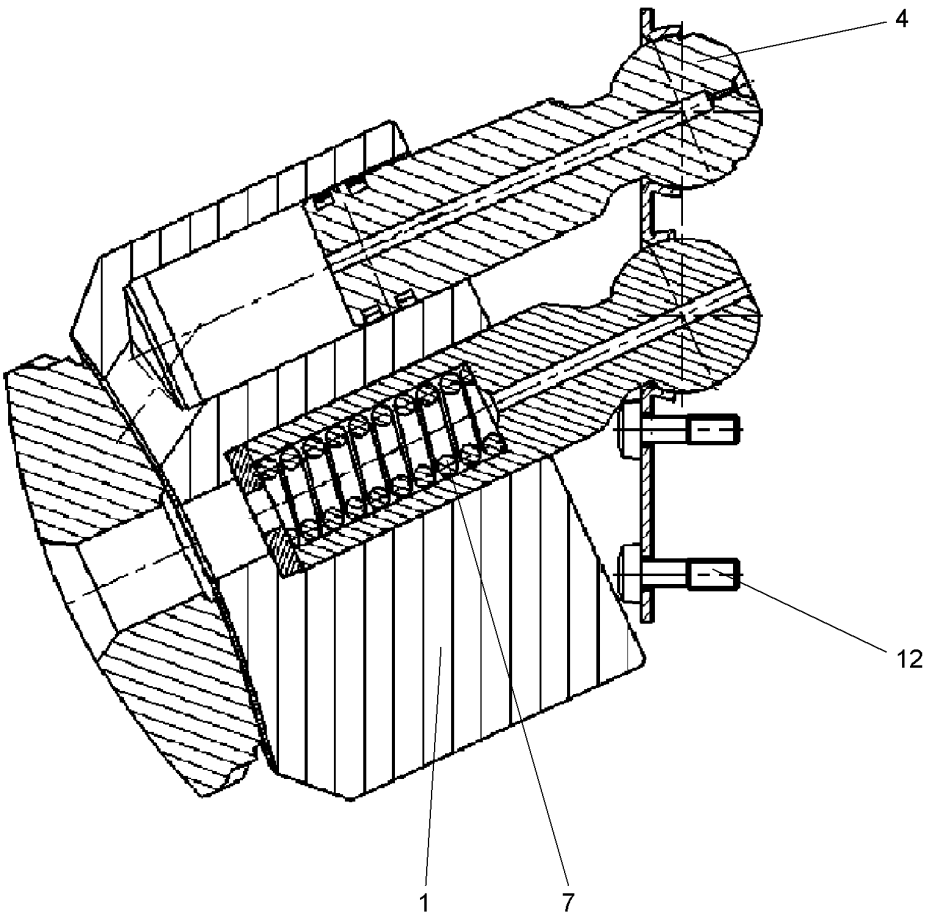

Pos.	Item	Quantity	Description	Bezeichnung	Serie	K
1	10007948	1	CYLINDER	ZYLINDER		
4	10007952	7	PISTON	KOLBEN		
7	10007967	1	PRESSURE SPRING	DRUCKFEDER		
12	10342275	14	OVAL SCREW M6X20 10.9	LINSENSCHRAUBE		

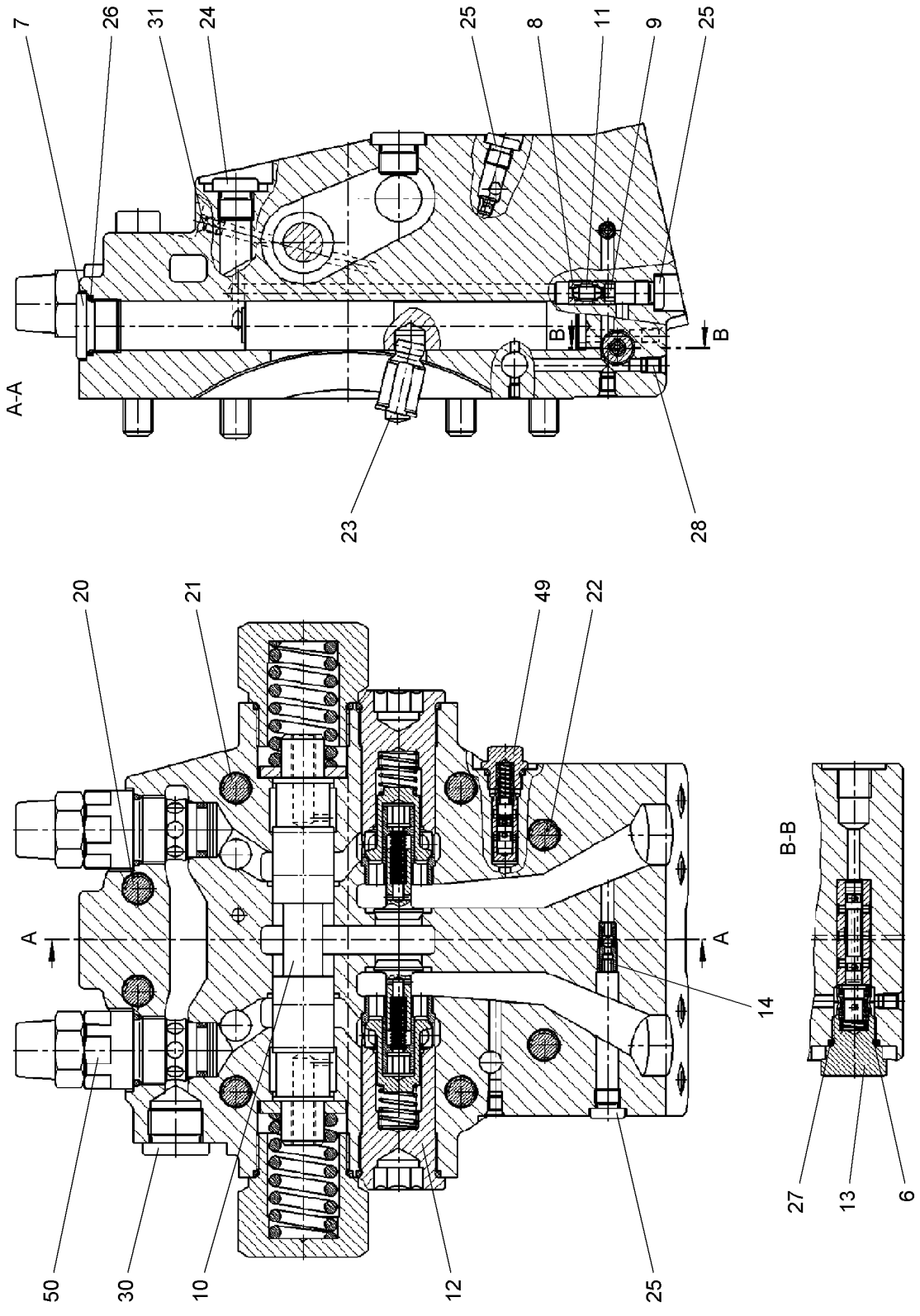
7
26
31
24
25
8
11
9
25
A-A
B
B
23
28
20
21
49
22
A
A
14
50
30
10
12
25
B-B
27
13
6
604984

Pos.	Item	Quantity	Description	Bezeichnung	Serie	K
6	10115224	1	PRESSURE SPRING	DRUCKFEDER		
7	11224761	1	SCREW PLUG	VERSCHLUSSSCHRAUBE		
8	7615603	1	THROTTLE SCREW	DROSSELSCHRAUBE		
9	7615604	1	THROTTLE SCREW	DROSSELSCHRAUBE		
10	512411914	1	BRAKE VALVE	BREMSVENTIL		
11	10115230	1	PIN	STIFT		
12	11224762	2	VALVE	VENTIL		
13	10115232	1	SCREW PLUG	VERSCHLUSSSCHRAUBE		
14	10446566	1	SHUTTLE VALVE ⇨ ❑ 456	WECHSELVENTIL		
20	11220320	2	SOCKET HEAD SCREW	ZYLINDERSCHRAUBE		
21	11220320	2	SOCKET HEAD SCREW	ZYLINDERSCHRAUBE		
22	11224767	4	SOCKET HEAD SCREW	ZYLINDERSCHRAUBE		
23	10598777	2	PARALLEL PIN	ZYLINDERSTIFT		
24	7414500	3	SCREW PLUG	VERSCHLUSSSCHRAUBE		
25	10115237	4	SCREW PLUG M10X1	VERSCHLUSSSCHRAUBE		
26	7028151	1	O-RING	O-RING		
27	10115240	1	O-RING	O-RING		
28	7022127	5	DOUBLE PLUG	DOPPELABREISSSTOPFEN		
30	10519025	1	SCREW PLUG	VERSCHLUSSSCHRAUBE		
31	7012971	1	DOUBLE PLUG	DOPPELABREISSSTOPFEN		
49	10115241	1	PRESSURE CONTROL VALVE	DRUCKREGELVENTIL		
50	511655114	2	PRESSURE LIMITING VALVE	DRUCKBEGRENZUNGSVENTIL		

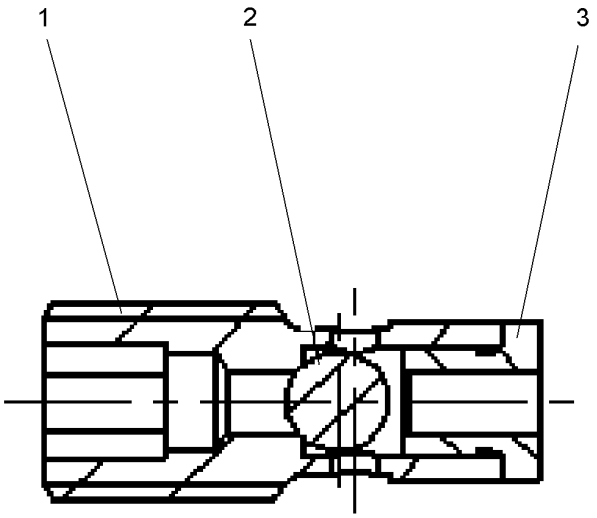

606080

Pos.	Item	Quantity	Description	Bezeichnung	Serie	K
1	11214946	1	VALVE SCREW	VENTILSCHRAUBE		
2	11225403	1	BALL	KUGEL		
3	10115304	1	BUSHING	BUCHSE		

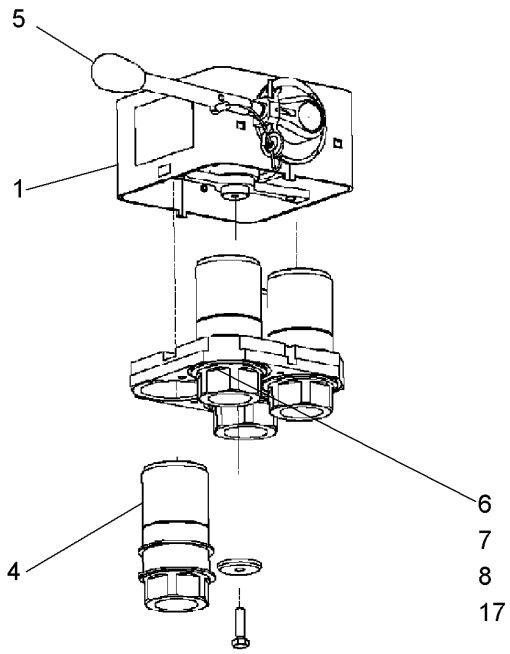

Pos.	Item	Quantity	Description	Bezeichnung	Serie	K
1	10447744	1	HOUSING	GEHAEUSE		
4	10447748	4	SLEEVE	MUFFE		
5	10447749	1	LEVER	HEBEL		
6	11293193	1	HUB	NABE		
7	11293195	1	WASHER	SCHEIBE		
8	11293196	1	LOCKING RING DIN 471 14X1 FEDERSTAHL/	SICHERUNGSRING		
17	11292956	1	GUIDE	FUEHRUNG		

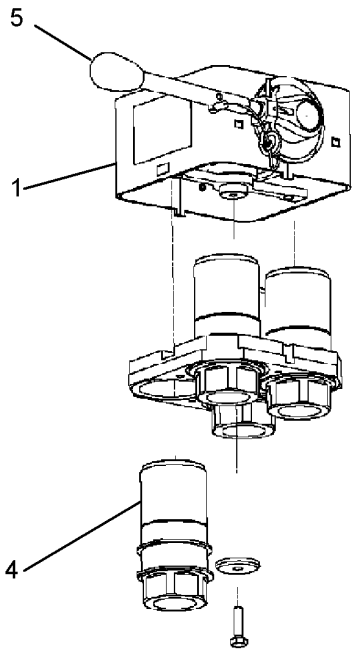

603333

Pos.	Item	Quantity	Description	Bezeichnung	Serie	K
1	10447743	1	HOUSING	GEHAEUSE		
4	10447748	4	SLEEVE	MUFFE		
5	10447749	1	LEVER	HEBEL		

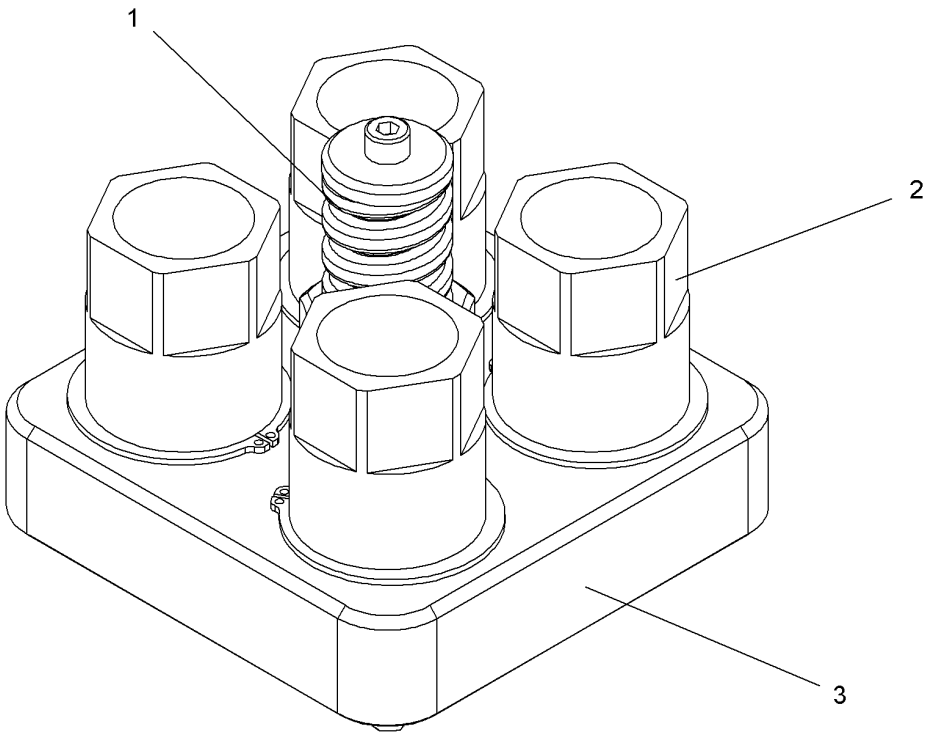

Pos.	Item	Quantity	Description	Bezeichnung	Serie	K
1	10572236	1	GUIDING BOLT	FUEHRUNGSBOLZEN		
2	10447747	4	PLUG	STECKER		
3	10572241	1	COVER	DECKEL		

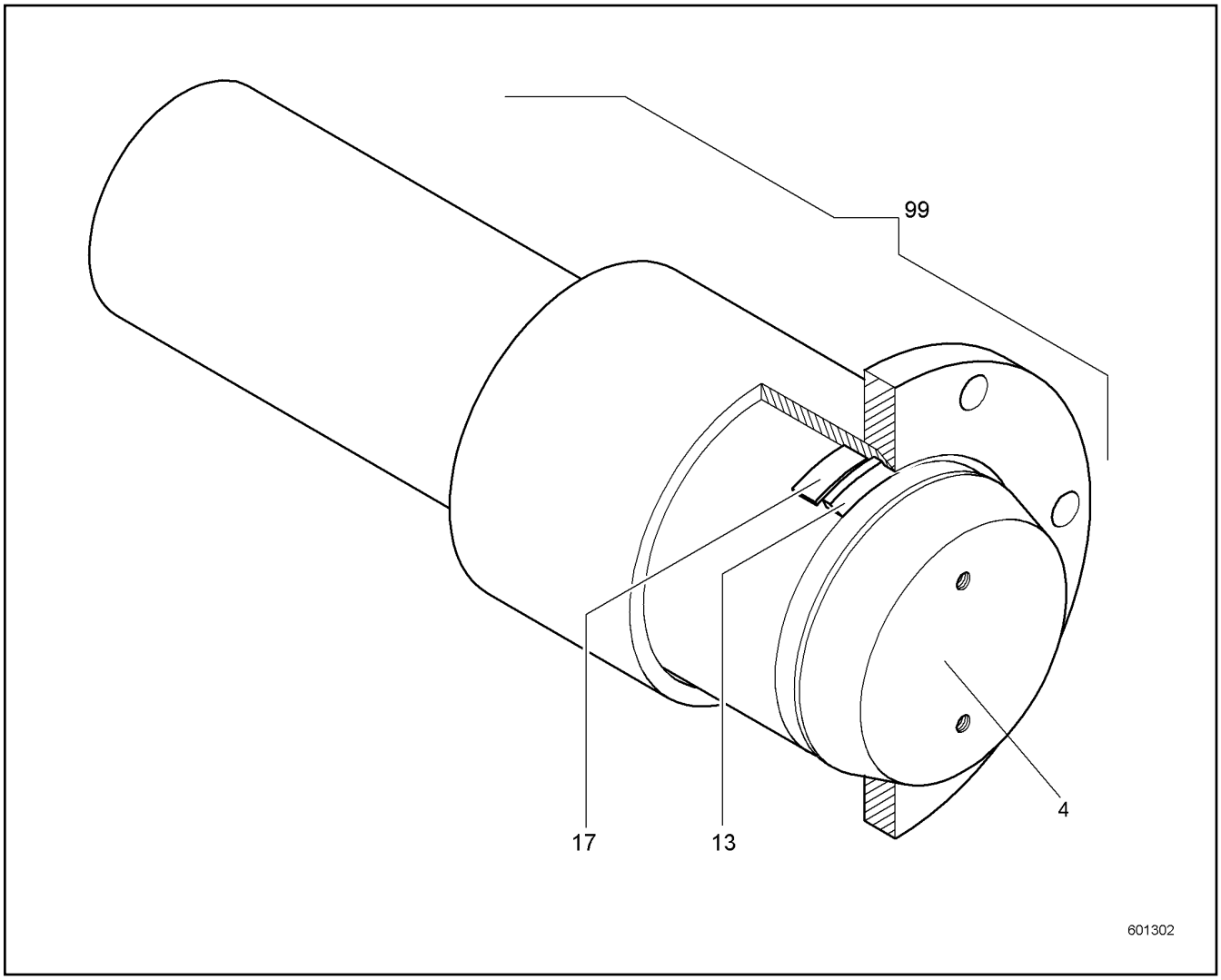

Pos.	Item	Quantity	Description	Bezeichnung	Serie	K
4	11230438	1	PIN 150X330	BOLZEN		
13	726054214	1	SCRAPER RING	ABSTREIFRING		
17	513319814	1	ROD GUIDE RING	STANGENFUEHRUNGSRING		
99	513319014	1	SEALING SET CPL CYL	DS KPL ZYL		

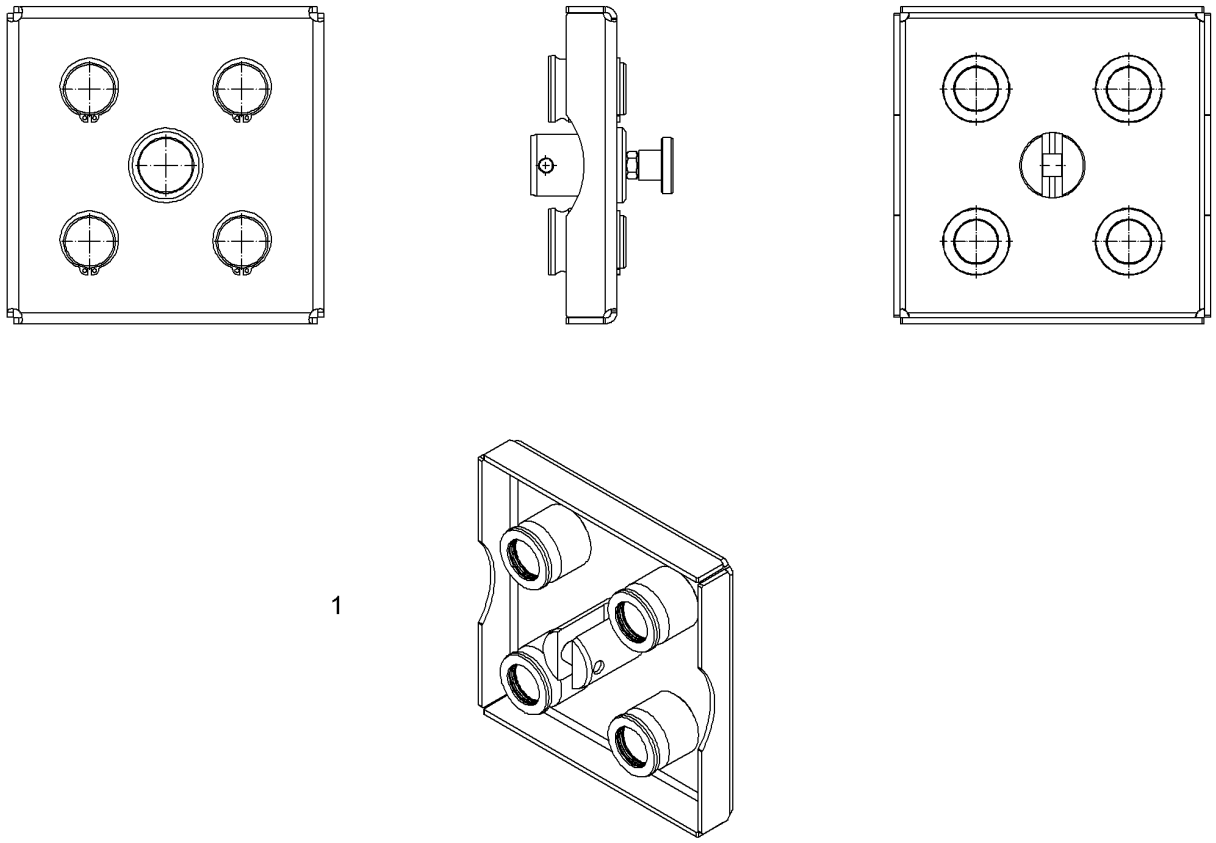

Pos.	Item	Quantity	Description	Bezeichnung	Serie	K
1	11247913	4	PLUG	STECKER		

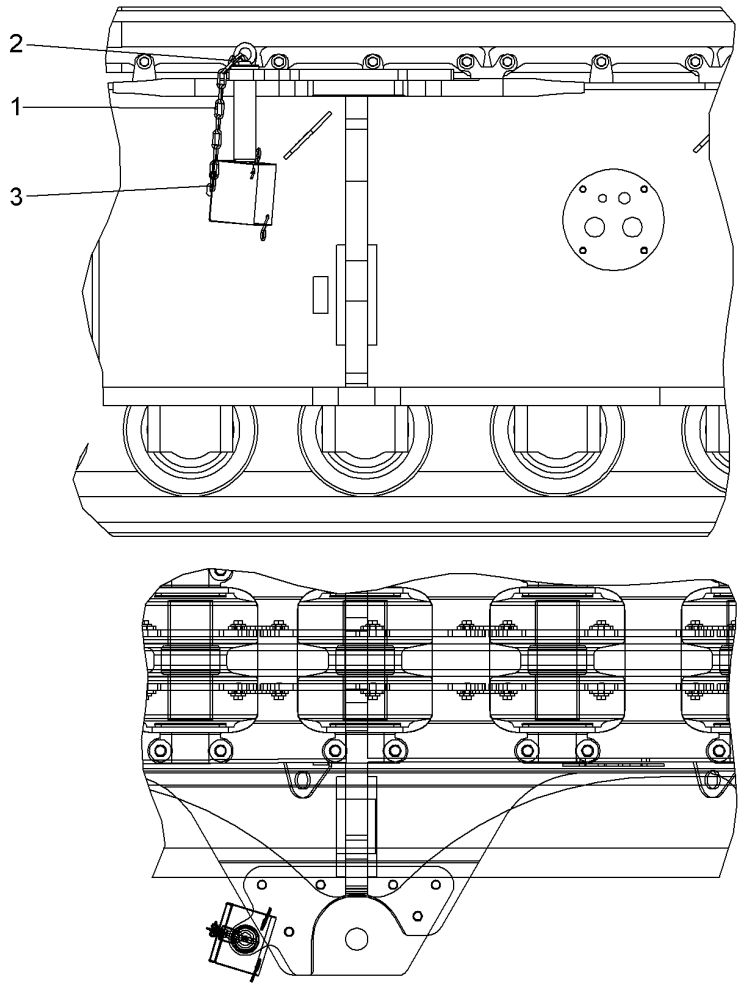

Pos.	Item	Quantity	Description	Bezeichnung	Serie	K
1	740000208	0.4	CHAIN	KETTE		
2	744010014	1	SNAP HOOK	KARABINERHAKEN		
3	773939214	1	SHACKLE	SCHAEKEL		

ACHTUNG !
ATTENTION !
ATTENTION !
ATENCIÓN !
ATENÇÃO !
ВНИМАНИЕ

Für Schlauchbestellungen kann über die Schlauchnummer, in der entsprechenden Schlauchliste, die Identnummer festgestellt werden.

For ordering flexible hoses you can find the identification number through the hose-number in the corresponding hose-list.

Pour des ordres de tuyau flexible le nombre d'identification on voit dans la liste de tuyau flexible correspondente.

Para el pedido de manguera, indicar el número de identificación de la manguera de la lista respectiva.

Para se encomendar uma mangueira, consulte o número de identificaçao na respectiva lista de mangueiras.

Для оформления заказов на шланги/рукавы идент. № может быть определен при помощи номера шланга/рукава, указанного в соответствующем перечне шлангов/рукавов.

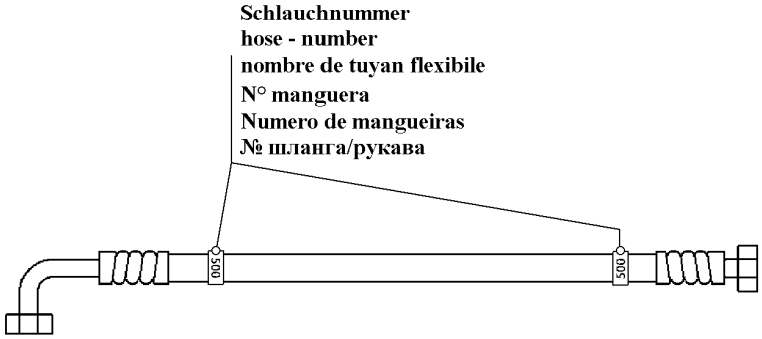

500000

Pos.	Item	Quantity	Description	Bezeichnung	Serie	K
100	996084614	1	HOSE CPL	SCHLAUCH KPL		
101	996087014	1	HOSE CPL	SCHLAUCH KPL		
102	928209814	1	HOSE CPL	SCHLAUCH KPL		
103	928872514	1	HOSE CPL	SCHLAUCH KPL		
104	993204614	1	HOSE CPL	SCHLAUCH KPL		
105	996084614	1	HOSE CPL	SCHLAUCH KPL		
106	996087014	1	HOSE CPL	SCHLAUCH KPL		
107	928209814	1	HOSE CPL	SCHLAUCH KPL		
108	928872814	1	HOSE CPL	SCHLAUCH KPL		
109	993204614	1	HOSE CPL	SCHLAUCH KPL		
110	996991514	1	HOSE CPL	SCHLAUCH KPL		
111	928265514	1	HOSE CPL	SCHLAUCH KPL		
112	918288114	1	HOSE CPL	SCHLAUCH KPL		
113	918276114	1	HOSE CPL	SCHLAUCH KPL		
114	996991514	1	HOSE CPL	SCHLAUCH KPL		
115	928265514	1	HOSE CPL	SCHLAUCH KPL		
116	918288114	1	HOSE CPL	SCHLAUCH KPL		
117	918276114	1	HOSE CPL	SCHLAUCH KPL		
118	928152414	1	HOSE CPL	SCHLAUCH KPL		
119	995437214	1	HOSE CPL	SCHLAUCH KPL		
120	996000214	1	HOSE CPL	SCHLAUCH KPL		
121	996026214	1	HOSE CPL	SCHLAUCH KPL		
122	928137514	1	HOSE CPL	SCHLAUCH KPL		
123	996204514	1	HOSE CPL	SCHLAUCH KPL		
124	996089814	1	HOSE CPL	SCHLAUCH KPL		
126	996204614	1	HOSE CPL	SCHLAUCH KPL		

ACHTUNG !
ATTENTION !
ATTENTION !
ATENCIÓN !
ATENÇÃO !
ВНИМАНИЕ

Für Schlauchbestellungen kann über die Schlauchnummer, in der entsprechenden Schlauchliste, die Identnummer festgestellt werden.

For ordering flexible hoses you can find the identification number through the hose-number in the corresponding hose-list.

Pour des ordres de tuyau flexible le nombre d'identification on voit dans la liste de tuyau flexible correspondente.

Para el pedido de manguera, indicar el número de identificación de la manguera de la lista respectiva.

Para se encomendar uma mangueira, consulte o número de identificaçao na respectiva lista de mangueiras.

Для оформления заказов на шланги/рукавы идент. № может быть определен при помощи номера шланга/рукава, указанного в соотетствующем перечне шлангов/рукавов.

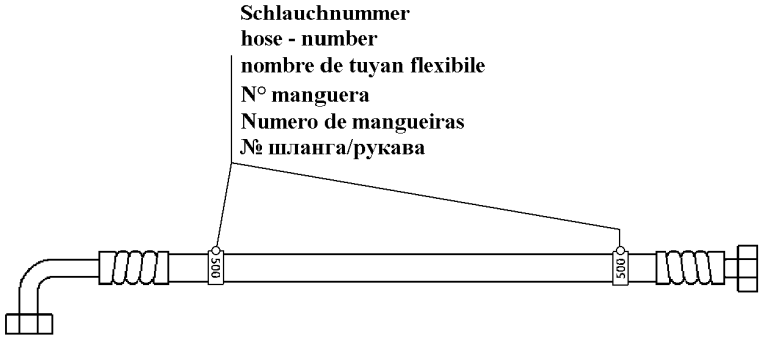

500000

Pos.	Item	Quantity	Description	Bezeichnung	Serie	K
127	918272514	1	HOSE CPL	SCHLAUCH KPL		
129	996026214	1	HOSE CPL	SCHLAUCH KPL		
130	996450714	1	HOSE CPL	SCHLAUCH KPL		
131	992564614	1	HOSE CPL	SCHLAUCH KPL		
132	996972614	1	HOSE CPL	SCHLAUCH KPL		
133	995085214	1	HOSE CPL	SCHLAUCH KPL		
134	995085214	1	HOSE CPL	SCHLAUCH KPL		
135	990045814	1	HOSE CPL	SCHLAUCH KPL		
136	991276414	1	HOSE CPL	SCHLAUCH KPL		
137	991961214	1	HOSE CPL	SCHLAUCH KPL		
138	911292114	1	HOSE CPL	SCHLAUCH KPL		
139	928538414	1	HOSE CPL	SCHLAUCH KPL		
140	995219914	1	HOSE CPL	SCHLAUCH KPL		
141	996204714	1	HOSE CPL	SCHLAUCH KPL		
142	996450714	1	HOSE CPL	SCHLAUCH KPL		
143	992564614	1	HOSE CPL	SCHLAUCH KPL		
144	991276414	1	HOSE CPL	SCHLAUCH KPL		
145	990045814	1	HOSE CPL	SCHLAUCH KPL		
150	928973314	1	HOSE CPL	SCHLAUCH KPL		
151	928169614	1	HOSE CPL	SCHLAUCH KPL		
152	991312114	1	HOSE CPL	SCHLAUCH KPL		
153	929467714	1	HOSE CPL	SCHLAUCH KPL		
154	928865914	1	HOSE CPL	SCHLAUCH KPL		
155	991312114	1	HOSE CPL	SCHLAUCH KPL		
156	928973314	1	HOSE CPL	SCHLAUCH KPL		
157	929467714	1	HOSE CPL	SCHLAUCH KPL		

ACHTUNG !
ATTENTION !
ATTENTION !
ATENCIÓN !
ATENÇÃO !
ВНИМАНИЕ

Für Schlauchbestellungen kann über die Schlauchnummer, in der entsprechenden Schlauchliste, die Identnummer festgestellt werden.

For ordering flexible hoses you can find the identification number through the hose-number in the corresponding hose-list.

Pour des ordres de tuyau flexible le nombre d'identification on voit dans la liste de tuyau flexible correspondente.

Para el pedido de manguera, indicar el número de identificación de la manguera de la lista respectiva.

Para se encomendar uma mangueira, consulte o número de identificaçao na respectiva lista de mangueiras.

Для оформления заказов на шланги/рукавы идент. № может быть определен при помощи номера шланга/рукава, указанного в соотетствующем перечне шлангов/рукавов.

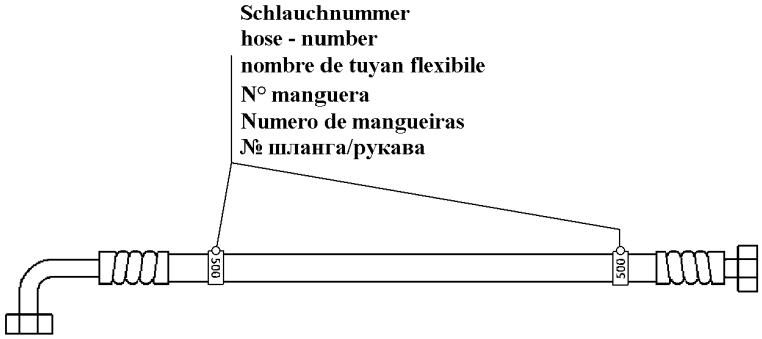

500000

Pos.	Item	Quantity	Description	Bezeichnung	Serie	K
158	928865914	1	HOSE CPL	SCHLAUCH KPL		
159	928169614	1	HOSE CPL	SCHLAUCH KPL		
160	996204814	1	HOSE CPL	SCHLAUCH KPL		
161	996084314	1	HOSE CPL	SCHLAUCH KPL		
162	918820914	1	HOSE CPL	SCHLAUCH KPL		
163	928003714	1	HOSE CPL	SCHLAUCH KPL		
164	996084314	1	HOSE CPL	SCHLAUCH KPL		
165	996204814	1	HOSE CPL	SCHLAUCH KPL		
166	929399714	1	HOSE CPL	SCHLAUCH KPL		
167	995240114	1	HOSE CPL	SCHLAUCH KPL		

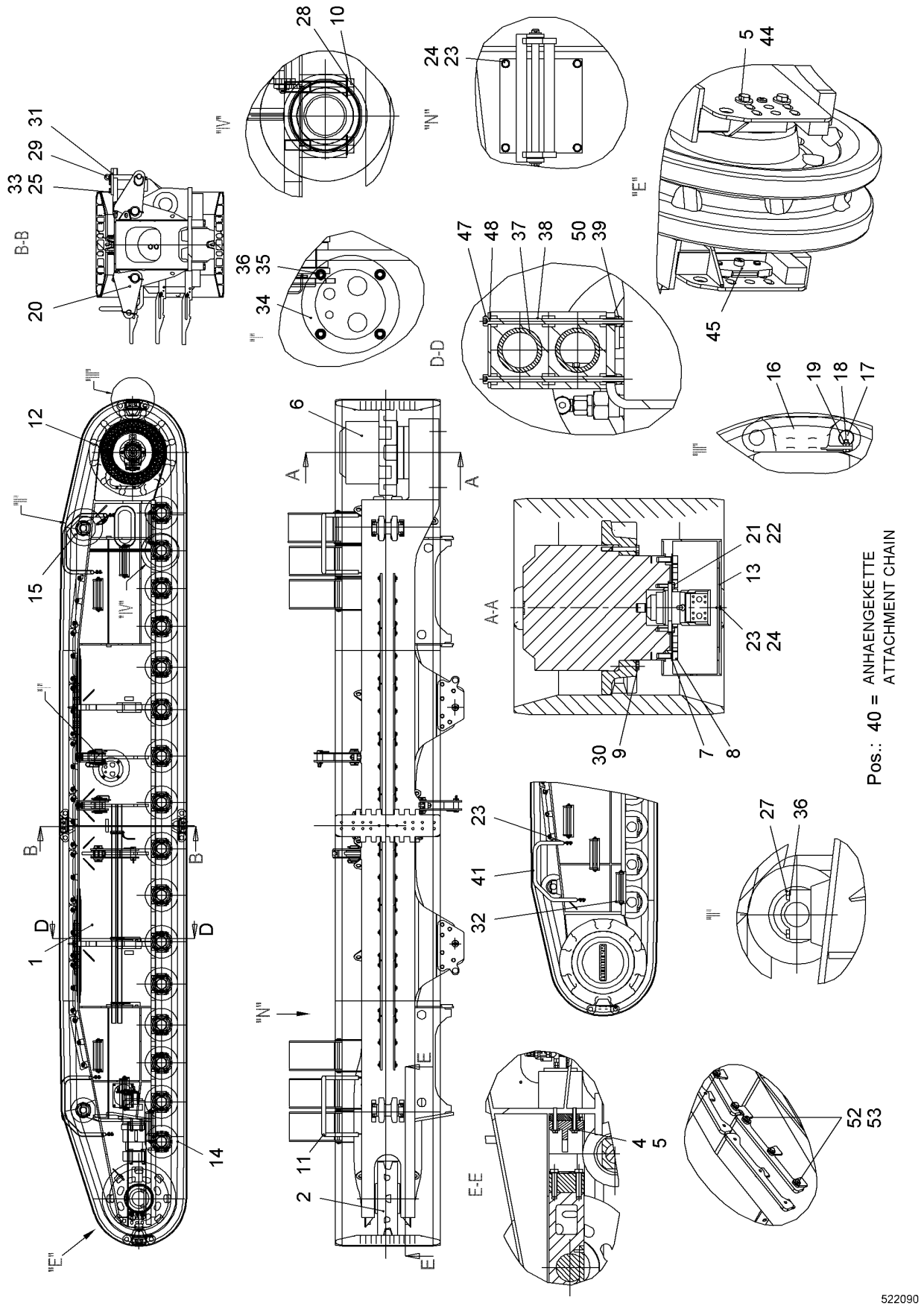

24.5.2017 522090	**138376_ETK_001**	466 (1/2)
LIEBHERR	**CRAWLER CARRIER RIGHT CPL** **RAUPENTRAEGER RE KPL**	**11 89 365 0**

Pos.	Item	Quantity	Description	Bezeichnung	Serie	K
1	11893689	1	CRAWLER CARRIER ST.CONST.	RAUPENTRAEGER RE SCHWK		
2	10557161	1	GUIDE WHEEL UNIT CPL ⇨ ❑ 468	LEITRADEINHEIT KPL		
4	10543932	4	HEX SCREW ISO 4017 M20X130 10.9	SECHSKANTSCHRAUBE		
5	10567956	8	WASHER DIN 6340 21 C35	SCHEIBE		
6	969317801	1	TRACTION DRIVE ⇨ ❑ 470	FAHRANTRIEB		
7	421500614	30	WASHER EN 14399-6 30 ST	SCHEIBE		
8	10336668	30	SOCKET HEAD SCREW DIN 912 M30X2X80 12.	ZYLINDERSCHRAUBE		
9	460014603	45	WASHER DIN 6916 25 C45	SCHEIBE		
10	10544028	64	HEX SCREW ISO 4014 M30X180 10.9	SECHSKANTSCHRAUBE		
11	10523559	1	HANDRAIL	HANDLAUF		
12	10521183	1	SPROCKET	TURAS		
13	971333403	1	COVER	DECKEL		
14	10552633	16	RUNNING ROLLER CPL	LAUFROLLE KPL		
15	790523314	2	CARRYING ROLLER CPL	TRAGROLLE KPL		
16	388291208	72	FLOOR PLATE	BODENPLATTE		
17	954584908	144	ROUND STEEL	RUNDSTAHL		
18	406517314	152	HEX SCREW ISO 4017 M12X30 A4-70	SECHSKANTSCHRAUBE		
19	10540495	152	HEX NUT ISO 10511 M12 A4	SECHSKANTMUTTER		
20	971333503	3	TRANSPORT BRACKET CPL	TRANSPORTARM KPL		
21	10544174	2	WASHER ISO 7089 20	SCHEIBE		
22	10545854	2	HEX SCREW ISO 4017 M20X75 10.9	SECHSKANTSCHRAUBE		
23	4901782	15	WASHER ISO 7089 12 A4	SCHEIBE		
24	406517914	7	HEX SCREW ISO 4017 M12X25 A4-70	SECHSKANTSCHRAUBE		
25	10543944	12	HEX SCREW ISO 4017 M24X80 10.9	SECHSKANTSCHRAUBE		
27	10543910	8	HEX SCREW ISO 4017 M16X90 10.9	SECHSKANTSCHRAUBE		
28	10544177	64	WASHER ISO 7089 30	SCHEIBE		
29	992921714	2	PIN CPL	BOLZEN KPL		
30	406154014	45	HEX SCREW ISO 8765 M24X2X200 10.9	SECHSKANTSCHRAUBE		
31	954373603	2	WP	WP		
32	10501795	6	ACCESS CPL ⇨ ❑ 475	AUFSTIEG KPL		
33	10544176	12	WASHER ISO 7089 24	SCHEIBE		
34	10558762	1	DIAPHRAGM	SCHOTTBLECH		
35	10539315	4	HEX SCREW ISO 4017 M16X25 10.9	SECHSKANTSCHRAUBE		
36	10544172	12	WASHER ISO 7089 16	SCHEIBE		
37	510511814	5	HYDRAULIC HOSE	HYDRAULIKSCHLAUCH		
38	7413103	12	CLAMP-HALF	KLEMMHAELFTE		
39	10540492	6	HEX NUT ISO 10511 M6 A4	SECHSKANTMUTTER		
40	990835714	1	ATTACHMENT CHAIN ⇨ ❑ 476	ANHAENGEKETTE		
41	10518461	1	HANDRAIL	HANDLAUF		
44	10543920	4	HEX SCREW ISO 4017 M20X40 10.9	SECHSKANTSCHRAUBE		
45	10539631	2	LIMIT STOP	ANSCHLAG		
47	10446871	6	SOCKET HEAD SCREW ISO 4762 M6X155 10.9	ZYLINDERSCHRAUBE		
48	602026414	3	LID PLATE	DECKPLATTE		
50	420000414	6	WASHER ISO 7089 6 A4	SCHEIBE		
52	10539317	54	HEX SCREW ISO 4017 M16X35 10.9	SECHSKANTSCHRAUBE		
53	421600901	54	WASHER DIN 7349 17 ST	SCHEIBE		

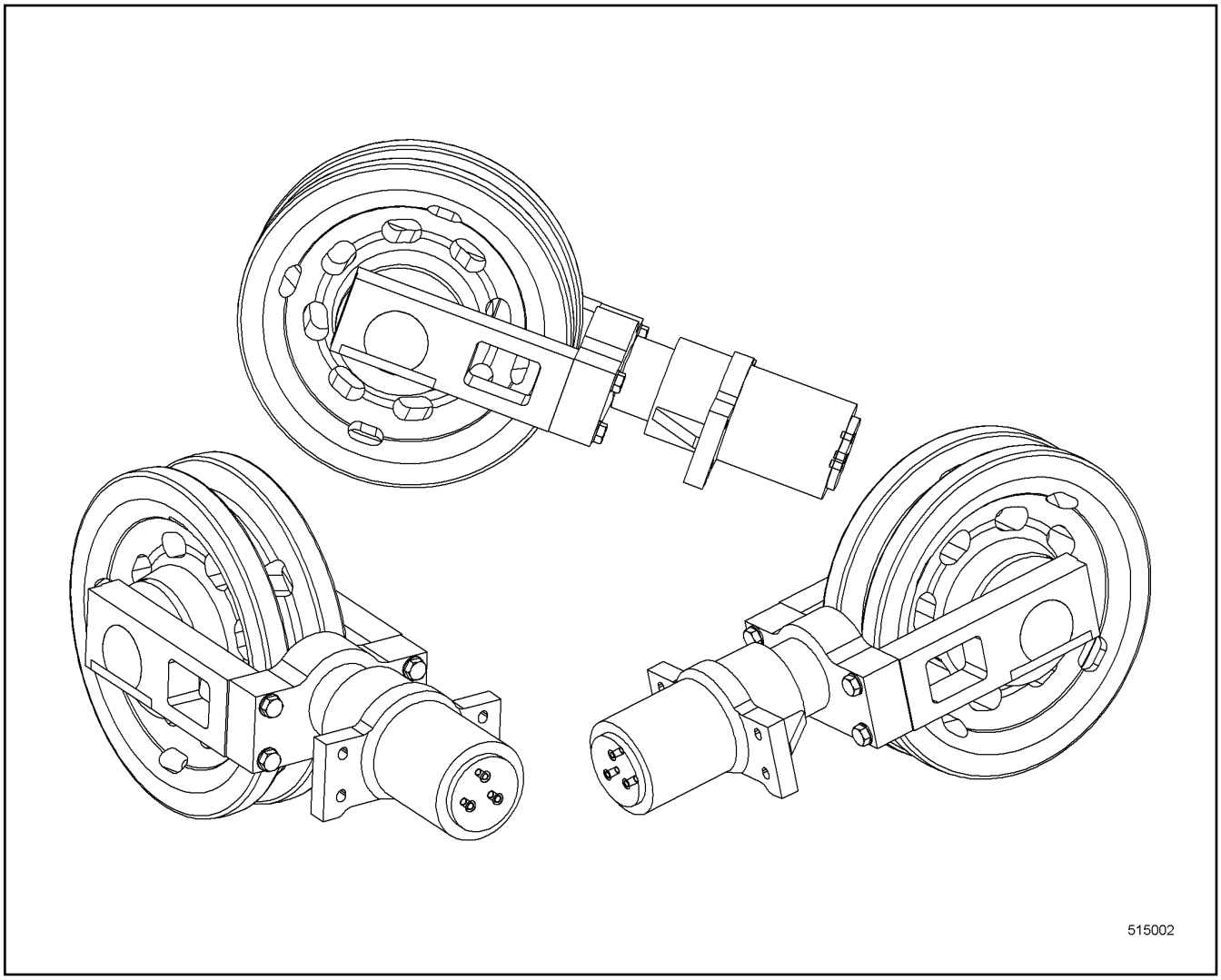

Pos.	Item	Quantity	Description	Bezeichnung	Serie	K
1	10557162	1	GUIDE WHEEL CPL ⇨ ❑ 469	LEITRAD KPL		
2	10557163	1	TENSION JACK HYDR CPL	SPANNER HYDR KPL		

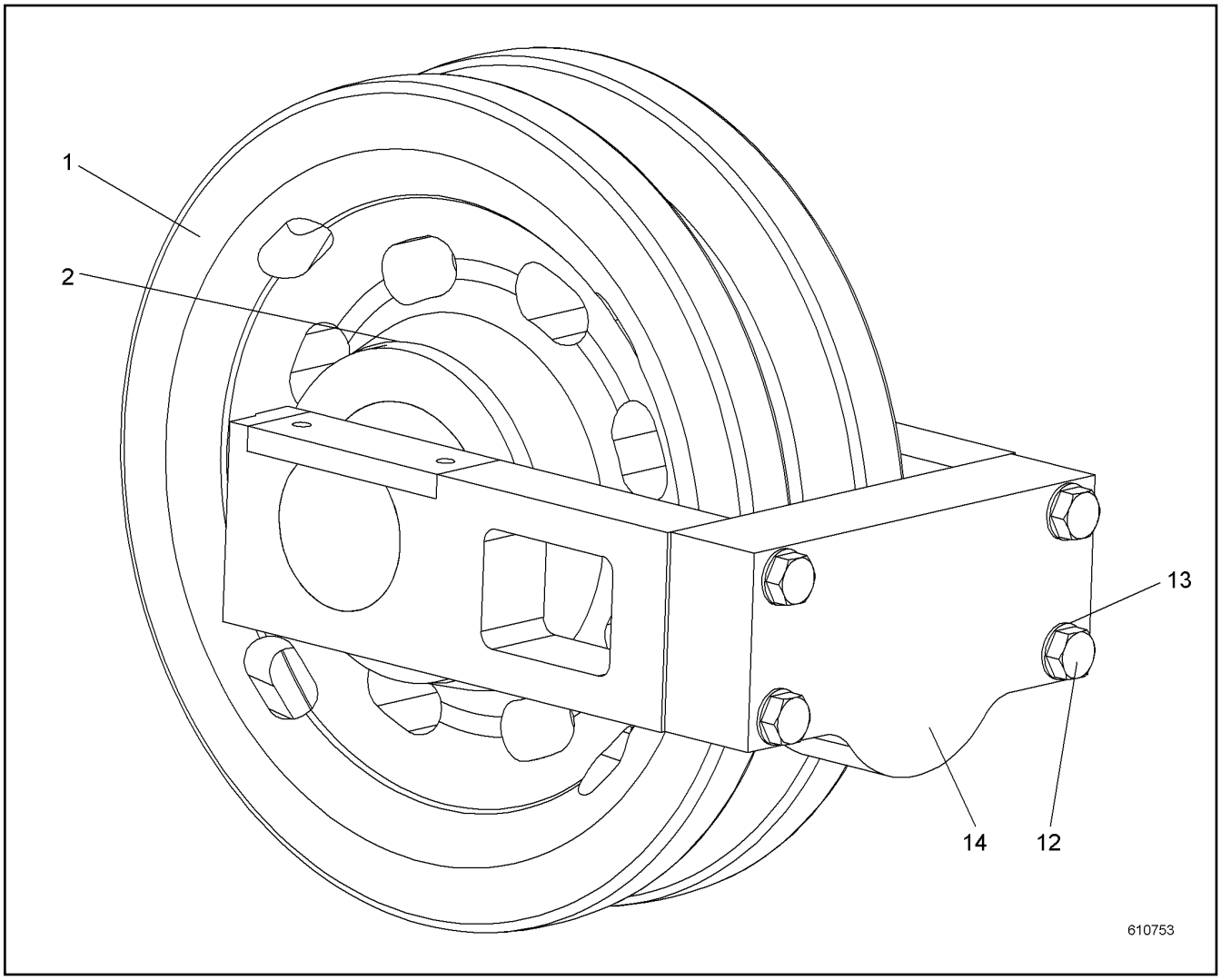

Pos.	Item	Quantity	Description	Bezeichnung	Serie	K
1	11299752	1	GUIDE WHEEL	LEITRAD		
2	11890145	2	BUSHING	BUCHSE		
12	10590183	4	SCREW M30X1.5X150	SCHRAUBE		
13	10544177	4	WASHER ISO 7089 30	SCHEIBE		
14	10589483	1	TRAVERSE	TRAVERSE		

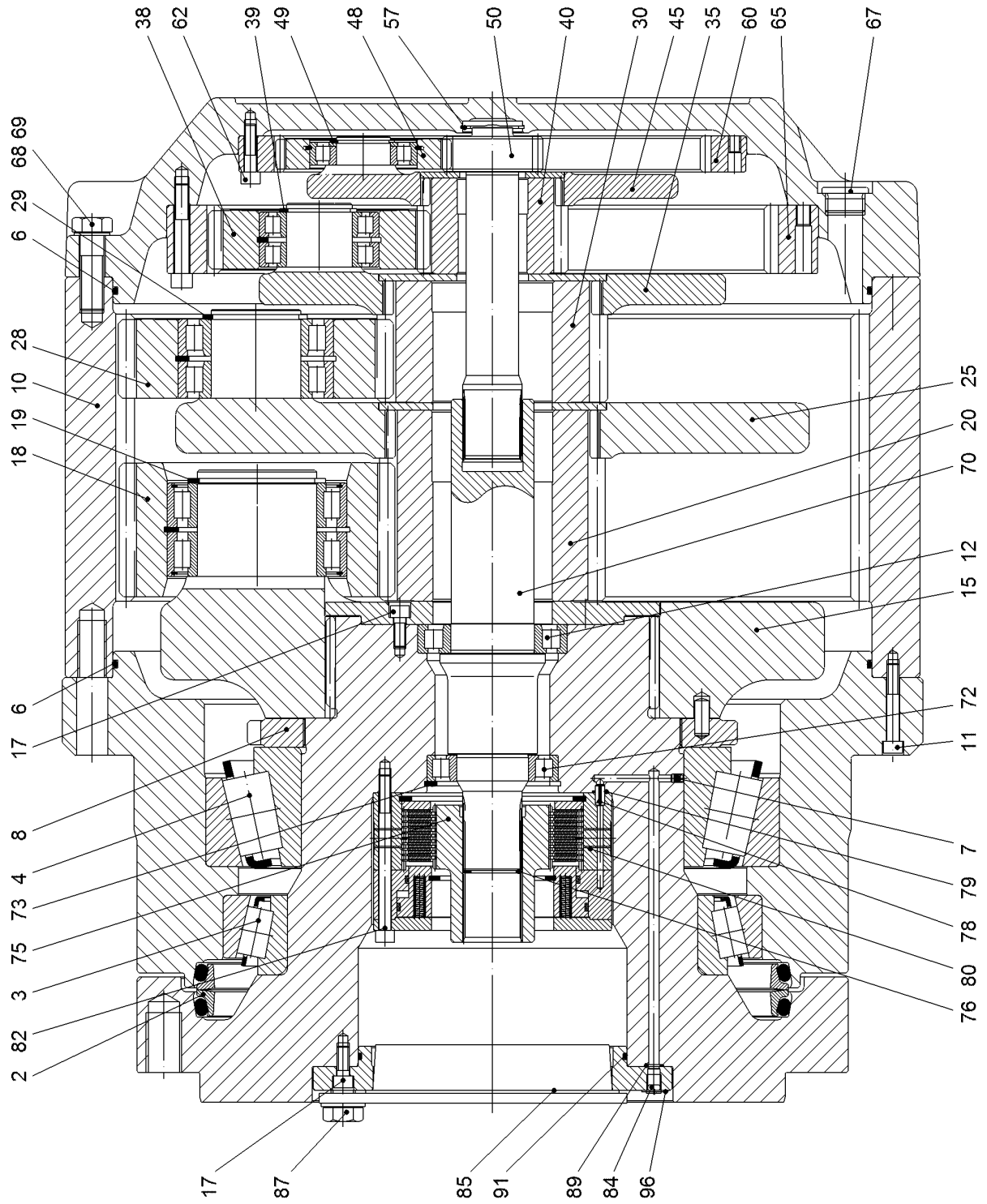
38
62
39
49
48
57
50
40
30
45
35
60
65
67
68 69
6 29
28
10
19
18
25
20
70
12
15
6
17
72
11
8
7
4
79
73
78
75
80
3
76
82
2
17
87
85
91
89
84
96
606629

Pos.	Item	Quantity	Description	Bezeichnung	Serie	K
2	7610244	1	AXIAL FACE SEAL	GLEITRINGDICHTUNG		
3	761008703	1	TAPERED ROLLER BEARING	KEGELROLLENLAGER		
4	746225801	1	TAPERED ROLLER BEARING	KEGELROLLENLAGER		
6	726450601	2	O-RING	O-RING		
7	7380480	1	SEALING PLUG	DICHTSTOPFEN		
8	944403703	1	ADJUSTING NUT	EINSTELLMUTTER		
10	944403803	1	INNER WHEEL	INNENRAD		
11	4630200	15	SOCKET HEAD SCREW ISO 4762 M10X65 10.9	ZYLINDERSCHRAUBE		
12	7610021	1	CYL ROLLER BEARING	ZYL ROLLENLAGER		
15	944403903	1	PLANETARY CARRIER	PLANETENTRAEGER		
17	4043124	12	SOCKET HEAD SCREW ISO 4762 M10X25 10.9	ZYLINDERSCHRAUBE		
18	944404303	5	PLANET WHEEL ⇨ ❑ 472	PLANETENRAD		
19	428011901	5	LOCKING RING DIN 471 100X4 FEDERSTAHL/	SICHERUNGSRING		
20	944404503	1	SUN WHEEL	SONNENRAD		
25	944404603	1	PLANETARY CARRIER	PLANETENTRAEGER		
28	944404803	3	PLANET WHEEL ⇨ ❑ 473	PLANETENRAD		
29	10171594	3	LOCKING RING DIN 471	SICHERUNGSRING		
30	944405203	1	SUN WHEEL	SONNENRAD		
35	944406403	1	PLANETARY CARRIER	PLANETENTRAEGER		
38	944406503	3	PLANET WHEEL ⇨ ❑ 474	PLANETENRAD		
39	400093303	3	LOCKING RING DIN 471 55X3	SICHERUNGSRING		
40	944378403	1	SUN WHEEL	SONNENRAD		
45	969392201	1	PLANETARY CARRIER	PLANETENTRAEGER		
48	944434703	3	PLANET WHEEL	PLANETENRAD		
49	10171583	3	LOCKING RING DIN 471 45X1.75	SICHERUNGSRING		
50	944434903	1	DRIVE SHAFT	ANTRIEBSWELLE		
57	429612001	1	L RING JL50X2	L-RING		
60	944378903	1	INNER WHEEL	INNENRAD		
62	4900981	24	SOCKET HEAD SCREW ISO 4762 M10X45 10.9	ZYLINDERSCHRAUBE		
65	944406703	1	INNER WHEEL	INNENRAD		
67	409710601	3	SCREW PLUG AEHNL.DIN 908 M33X2 ST	VERSCHLUSSSCHRAUBE		
68	10543925	12	HEX SCREW ISO 4017 M20X65 10.9	SECHSKANTSCHRAUBE		
69	423912001	12	LOCK WASHER 20X21X30X2.8 VS	SICHERUNGSSCHEIBE		
70	944405903	1	INTERMEDIATE SHAFT	ZWISCHENWELLE		
72	761001103	1	CYL ROLLER BEARING	ZYL ROLLENLAGER		
73	10171636	1	LOCKING RING DIN 472 110X4	SICHERUNGSRING		
75	944406203	1	MULTI-DISC CARRIER	LAMELLENTRAEGER		
76	428107101	1	LOCKING RING DIN 472 46X1.75	SICHERUNGSRING		
78	432008001	1	DOWEL PIN ISO 8752 8X16 ST	SPANNSTIFT		
79	726410201	1	O-RING	O-RING		
80	502037201	1	SPRING LOADED MULTI-DISC BRAKE ⇨ ❑ 354	FEDERDRUCKLAMELLENBREMS		
82	4002442	12	SOCKET HEAD SCREW ISO 4762 M10X130 10.	ZYLINDERSCHRAUBE		
84	779016501	1	BLANKING PLUG	VERSCHLUSSSTOPFEN		
85	779006901	1	CONICAL PLUG	KEGELSTOPFEN		
87	10543920	2	HEX SCREW ISO 4017 M20X40 10.9	SECHSKANTSCHRAUBE		
89	726403201	1	O-RING	O-RING		
91	726428401	1	O-RING	O-RING		
96	431500401	2	GROOVED NAIL ISO 8746 2X6 ST	KERBNAGEL		

OHNE BILD
WITHOUT ILLUSTRATION
SANS PLANCHE
SIN FIG.
SEM ILUSTRAÇÃO
БЕЗ ИЗОБРАЖЕНИЯ

600000

Pos.	Item	Quantity	Description	Bezeichnung	Serie	K
1	944404403	1	PLANET WHEEL	PLANETENRAD		
5	746506601	2	CYLINDRICAL ROLLER BEARING	ZYLINDERROLLENLAGER		
7	10171632	1	LOCKING RING DIN 472 90X3	SICHERUNGSRING		

OHNE BILD
WITHOUT ILLUSTRATION
SANS PLANCHE
SIN FIG.
SEM ILUSTRAÇÃO
БЕЗ ИЗОБРАЖЕНИЯ

600000

Pos.	Item	Quantity	Description	Bezeichnung	Serie	K
1	944404903	1	PLANET WHEEL	PLANETENRAD		
5	746413001	2	CYLINDRICAL ROLLER BEARING	ZYLINDERROLLENLAGER		
7	10171639	1	LOCKING RING DIN 472 130X4	SICHERUNGSRING		

OHNE BILD
WITHOUT ILLUSTRATION
SANS PLANCHE
SIN FIG.
SEM ILUSTRAÇÃO
БЕЗ ИЗОБРАЖЕНИЯ

600000

Pos.	Item	Quantity	Description	Bezeichnung	Serie	K
1	944406603	1	PLANET WHEEL	PLANETENRAD		
5	746310401	2	CYLINDRICAL ROLLER BEARING	ZYLINDERROLLENLAGER		
7	428104201	1	LOCKING RING DIN 472 100X4	SICHERUNGSRING		

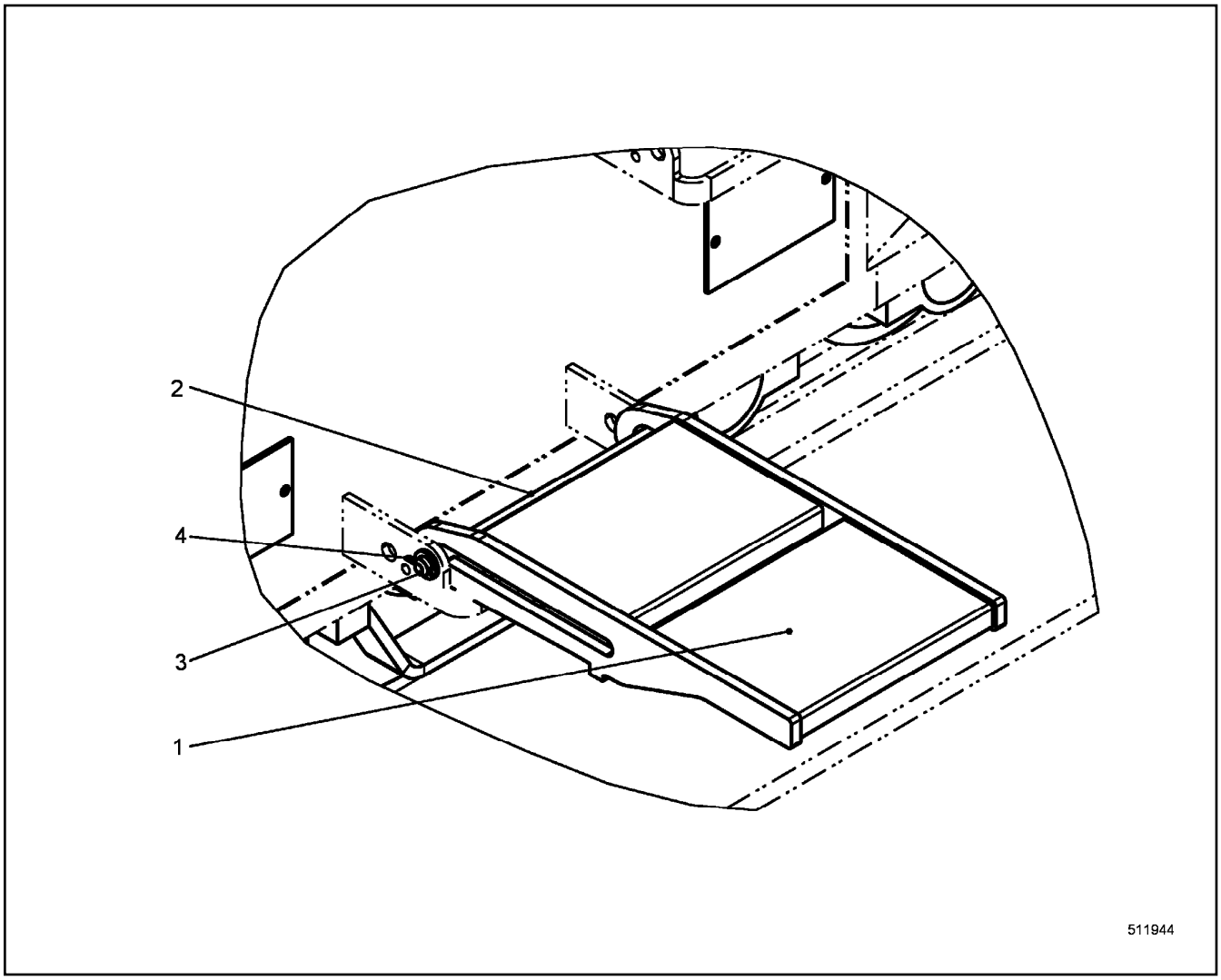

Pos.	Item	Quantity	Description	Bezeichnung	Serie	K
1	10501783	1	STEP	TRITTSTUFE		
2	11942040	1	PIN RD20X394 LHRD900-40;10019758	BOLZEN		
3	421101814	2	WASHER DIN EN 28738 22 ST;	SCHEIBE		
4	433006314	2	SPLIT PIN ISO 1234 5X32	SPLINT		

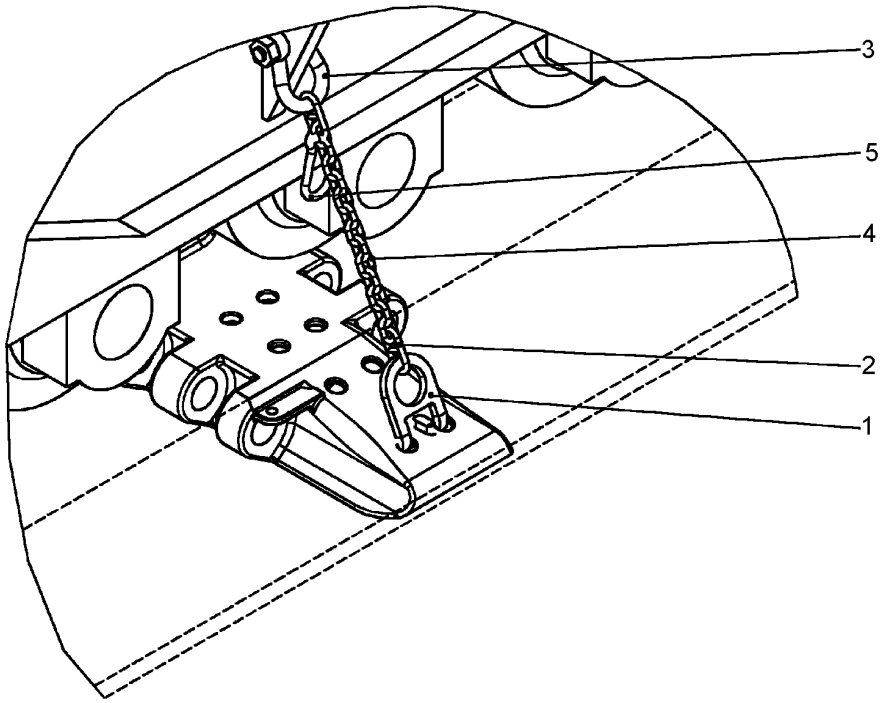

Pos.	Item	Quantity	Description	Bezeichnung	Serie	K
1	971304903	2	BRACKET	BUEGEL		
2	773967214	4	CHAIN CONNECTION LOCK	KETTENVERBINDUNGSSCHLOS		
3	773954714	2	SHACKLE	SCHAEKEL		
4	740000908	0.624	CHAIN	KETTE		
5	744010414	2	SNAP HOOK	KARABINERHAKEN		

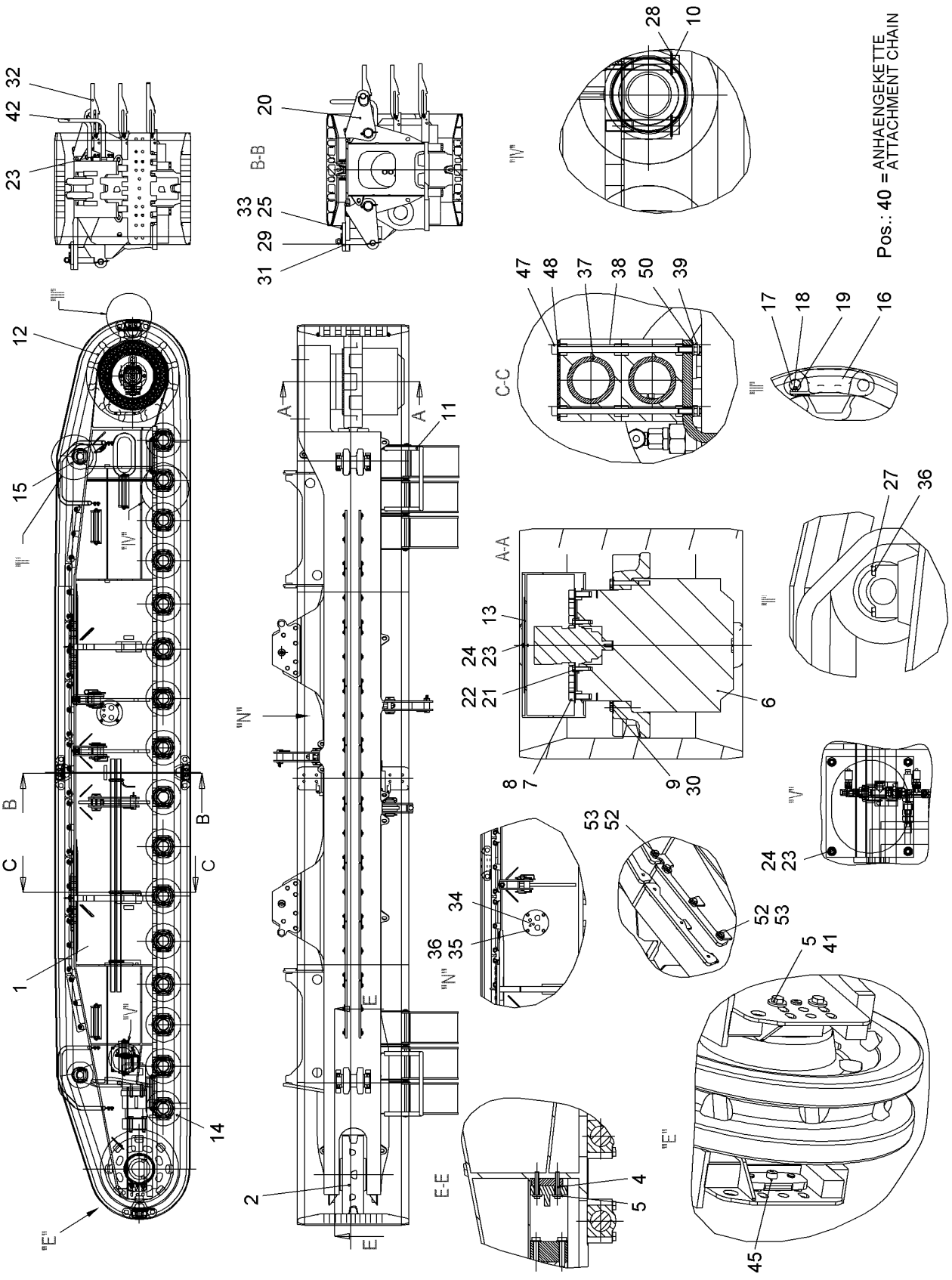
Pos.: 40 = ANHAENGEKETTE
ATTACHMENT CHAIN
522091

Pos.	Item	Quantity	Description	Bezeichnung	Serie	K
1	11893687	1	CRAWLERCARRIER LEFT ST.CONST	RAUPENTRAEGER LI SCHWK		
2	10557161	1	GUIDE WHEEL UNIT CPL ⇨ ❑ 468	LEITRADEINHEIT KPL		
4	10543932	4	HEX SCREW ISO 4017 M20X130 10.9	SECHSKANTSCHRAUBE		
5	10567956	8	WASHER DIN 6340 21 C35	SCHEIBE		
6	969317801	1	TRACTION DRIVE ⇨ ❑ 470	FAHRANTRIEB		
7	421500614	30	WASHER EN 14399-6 30 ST	SCHEIBE		
8	10336668	30	SOCKET HEAD SCREW DIN 912 M30X2X80 12.	ZYLINDERSCHRAUBE		
9	460014603	45	WASHER DIN 6916 25 C45	SCHEIBE		
10	10544028	64	HEX SCREW ISO 4014 M30X180 10.9	SECHSKANTSCHRAUBE		
11	10523559	1	HANDRAIL	HANDLAUF		
12	10521183	1	SPROCKET	TURAS		
13	971333403	1	COVER	DECKEL		
14	10552633	16	RUNNING ROLLER CPL	LAUFROLLE KPL		
15	790523314	2	CARRYING ROLLER CPL	TRAGROLLE KPL		
16	388291208	72	FLOOR PLATE	BODENPLATTE		
17	954584908	144	ROUND STEEL	RUNDSTAHL		
18	406517314	152	HEX SCREW ISO 4017 M12X30 A4-70	SECHSKANTSCHRAUBE		
19	10540495	152	HEX NUT ISO 10511 M12 A4	SECHSKANTMUTTER		
20	971333503	3	TRANSPORT BRACKET CPL	TRANSPORTARM KPL		
21	10544174	2	WASHER ISO 7089 20	SCHEIBE		
22	10545854	2	HEX SCREW ISO 4017 M20X75 10.9	SECHSKANTSCHRAUBE		
23	4901782	15	WASHER ISO 7089 12 A4	SCHEIBE		
24	406517914	7	HEX SCREW ISO 4017 M12X25 A4-70	SECHSKANTSCHRAUBE		
25	10543944	12	HEX SCREW ISO 4017 M24X80 10.9	SECHSKANTSCHRAUBE		
27	10543910	8	HEX SCREW ISO 4017 M16X90 10.9	SECHSKANTSCHRAUBE		
28	10544177	64	WASHER ISO 7089 30	SCHEIBE		
29	992921714	2	PIN CPL	BOLZEN KPL		
30	406154014	45	HEX SCREW ISO 8765 M24X2X200 10.9	SECHSKANTSCHRAUBE		
31	954373603	2	WP	WP		
32	10501795	6	ACCESS CPL ⇨ ❑ 475	AUFSTIEG KPL		
33	10544176	12	WASHER ISO 7089 24	SCHEIBE		
34	10558762	1	DIAPHRAGM	SCHOTTBLECH		
35	10539315	4	HEX SCREW ISO 4017 M16X25 10.9	SECHSKANTSCHRAUBE		
36	10544172	12	WASHER ISO 7089 16	SCHEIBE		
37	510511814	5	HYDRAULIC HOSE	HYDRAULIKSCHLAUCH		
38	7413103	12	CLAMP-HALF	KLEMMHAELFTE		
39	10540492	6	HEX NUT ISO 10511 M6 A4	SECHSKANTMUTTER		
40	990835714	1	ATTACHMENT CHAIN ⇨ ❑ 476	ANHAENGEKETTE		
41	10543920	4	HEX SCREW ISO 4017 M20X40 10.9	SECHSKANTSCHRAUBE		
42	10518461	1	HANDRAIL	HANDLAUF		
45	10539631	2	LIMIT STOP	ANSCHLAG		
47	10446871	6	SOCKET HEAD SCREW ISO 4762 M6X155 10.9	ZYLINDERSCHRAUBE		
48	602026414	3	LID PLATE	DECKPLATTE		
50	420000414	6	WASHER ISO 7089 6 A4	SCHEIBE		
52	10539317	54	HEX SCREW ISO 4017 M16X35 10.9	SECHSKANTSCHRAUBE		
53	421600901	54	WASHER DIN 7349 17 ST	SCHEIBE		

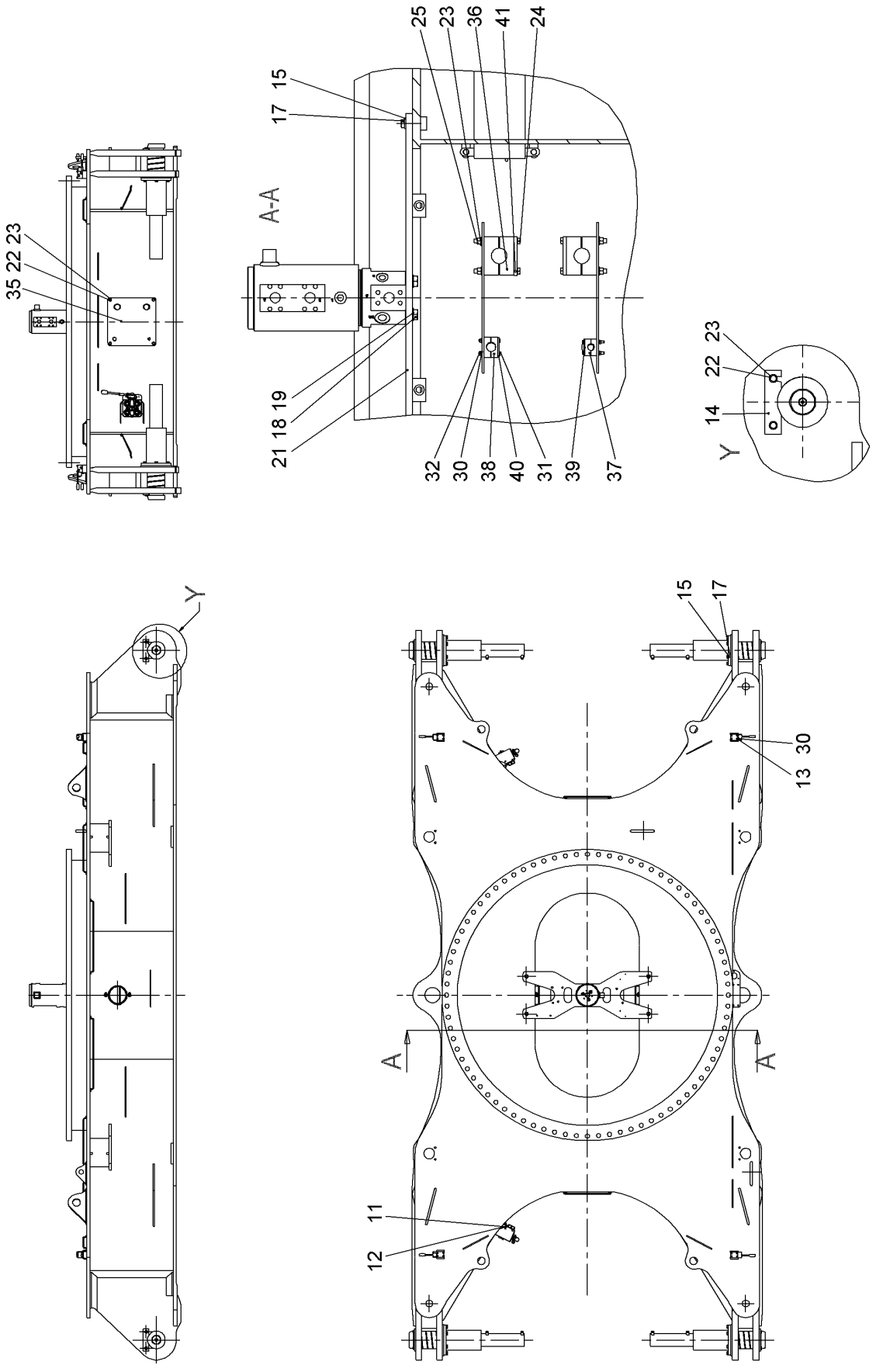
25
23
36
41
24
15
17
A-A
35 22 23
21 18 19
32
30
38
40
31
39
37
22 23
14
Y
Y
15
17
13 30
A
A
11
12
520512

Pos.	Item	Quantity	Description	Bezeichnung	Serie	K
11	406501414	6	HEX SCREW ISO 4017 M8X25 A4-70	SECHSKANTSCHRAUBE		
12	420001014	6	WASHER ISO 7089 8 A4	SCHEIBE		
13	10526837	16	HEX SCREW ISO 4017 M6X50 A4-70	SECHSKANTSCHRAUBE		
14	954372503	4	AXLE HOLDER	ACHSHALTER		
15	10544172	28	WASHER ISO 7089 16	SCHEIBE		
17	10539318	28	HEX SCREW ISO 4017 M16X40 10.9	SECHSKANTSCHRAUBE		
18	10543921	4	HEX SCREW ISO 4017 M20X45 10.9	SECHSKANTSCHRAUBE		
19	10544174	4	WASHER ISO 7089 20	SCHEIBE		
22	406517314	16	HEX SCREW ISO 4017 M12X30 A4-70	SECHSKANTSCHRAUBE		
23	4901782	24	WASHER ISO 7089 12 A4	SCHEIBE		
24	10538834	8	HEX SCREW ISO 4017 M12X130 A4-70	SECHSKANTSCHRAUBE		
25	411516914	8	HEX NUT ISO 4032 M12 A4-70	SECHSKANTMUTTER		
30	420000414	24	WASHER ISO 7089 6 A4	SCHEIBE		
31	10538801	8	HEX SCREW ISO 4017 M6X60 A4-70	SECHSKANTSCHRAUBE		
32	411517114	8	HEX NUT ISO 4032 M6 A4-70	SECHSKANTMUTTER		
35	11235482	2	DIAPHRAGM	SCHOTTBLECH		
36	602010114	16	CLAMP-HALF	KLEMMHAELFTE		
37	7404678	4	CLAMP-HALF	KLEMMHAELFTE		
38	602008808	4	CLAMP-HALF	KLEMMHAELFTE		
39	7005053	2	LID PLATE	DECKPLATTE		
40	7008583	2	LID PLATE	DECKPLATTE		
41	5005525	4	LID PLATE	DECKPLATTE		

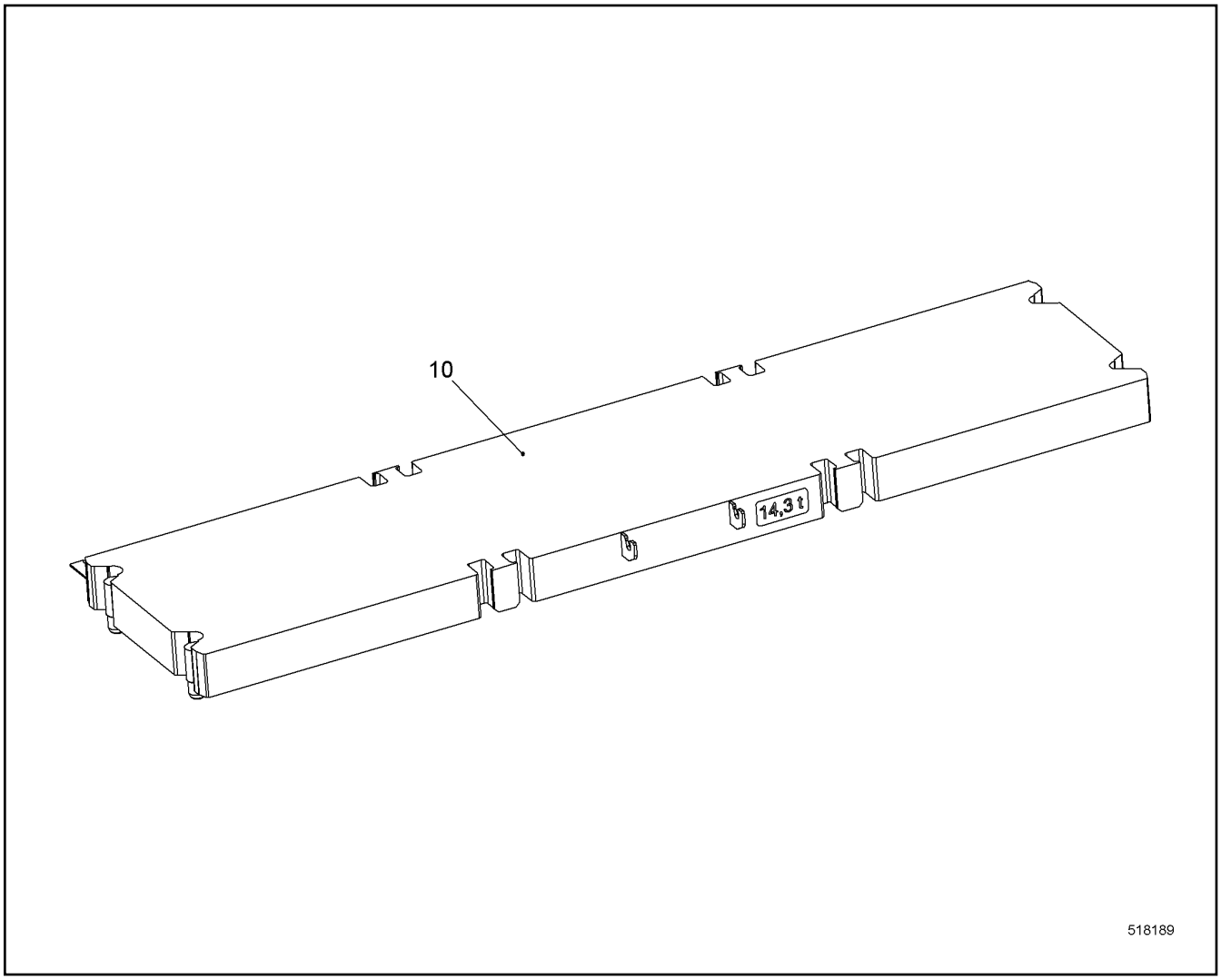

Pos.	Item	Quantity	Description	Bezeichnung	Serie	K
10	11242597	4	CENTRAL COUNTERW. ST.CONST.	ZENTRALBALLAST SCHWK		

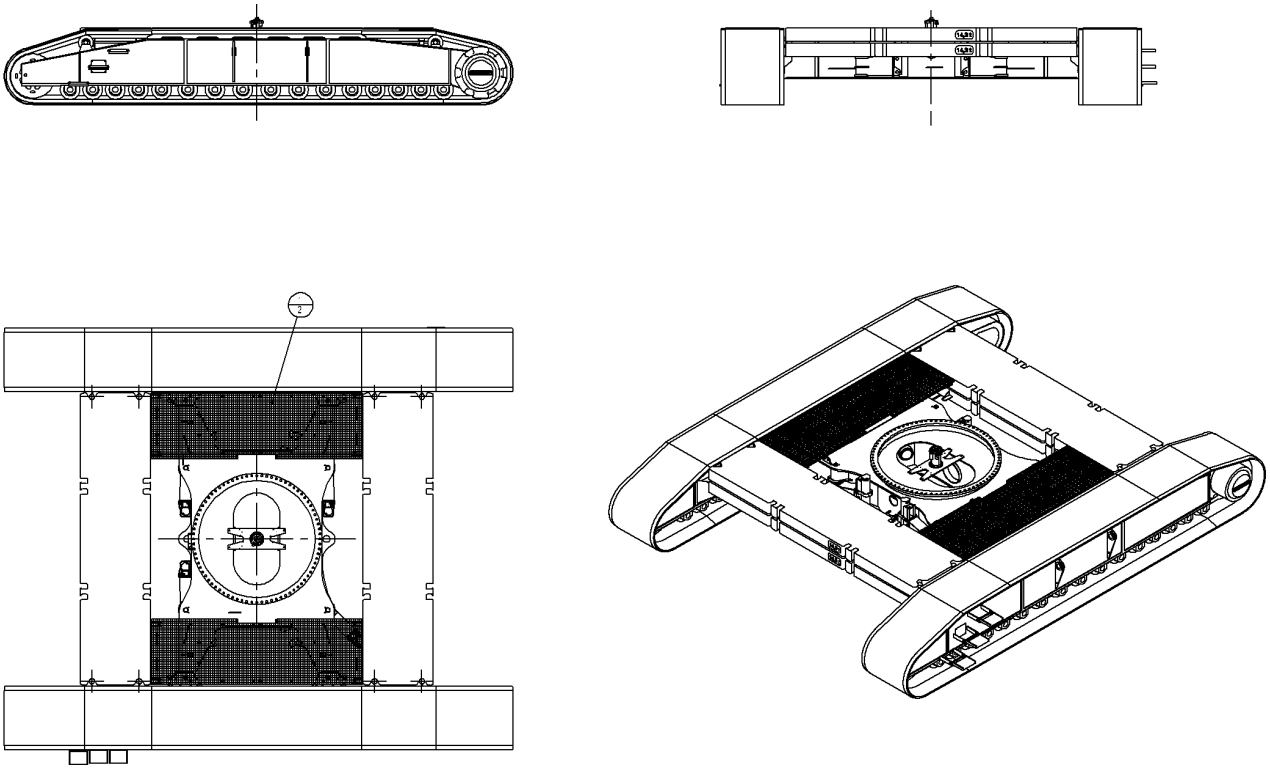

Pos.	Item	Quantity	Description	Bezeichnung	Serie	K
1	992671814	2	PEDESTAL ⇨ ❑ 483	PODEST		

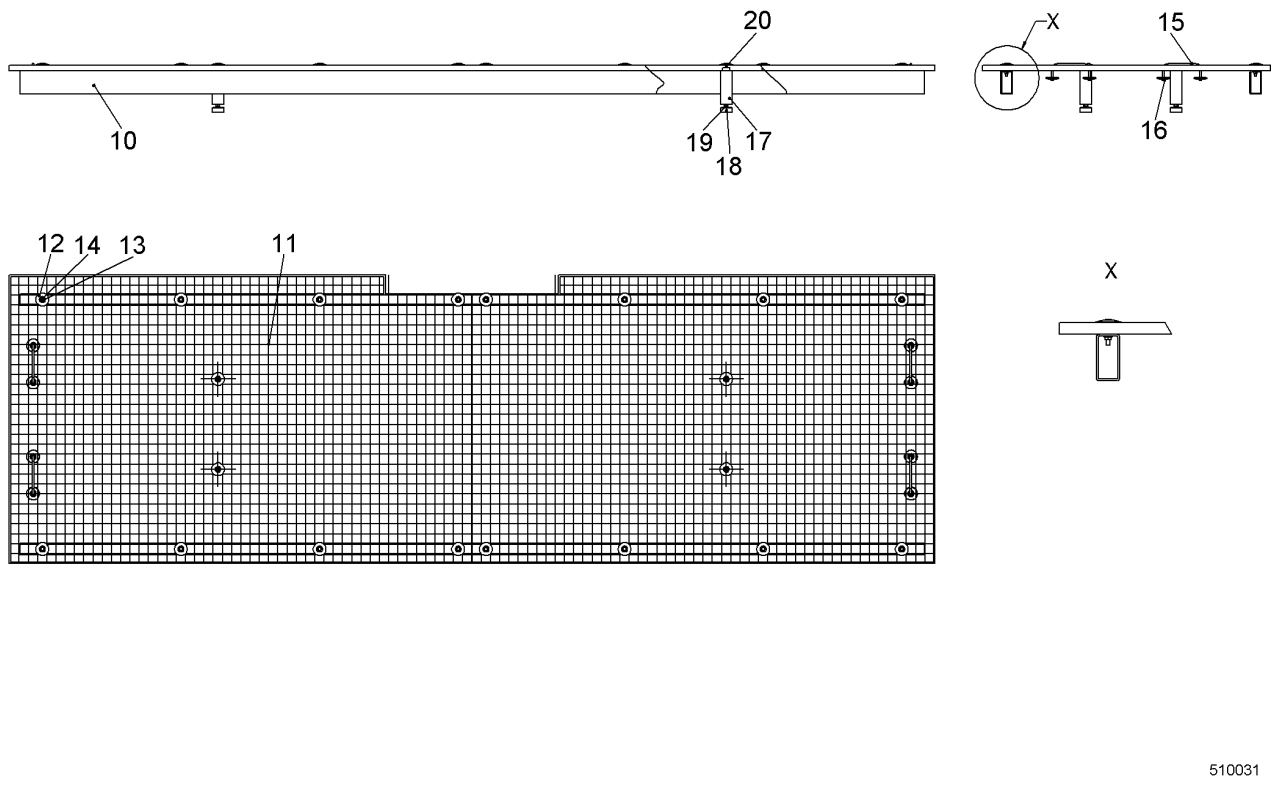

Pos.	Item	Quantity	Description	Bezeichnung	Serie	K
10	958097914	2	BRACING TUBE	TRAGROHR		
11	10227124	1	GRATING	GITTERROST		
12	10098157	28	DISH	TELLER		
13	10538807	16	HEX SCREW ISO 4017 M8X50 A4-70	SECHSKANTSCHRAUBE		
14	485569314	16	HEX NUT EN 1661 M8 A2-70	SECHSKANTMUTTER		
15	958478414	4	BRACKET	BUEGEL		
16	10540493	8	HEX NUT ISO 10511 M8 A4	SECHSKANTMUTTER		
17	10227757	4	SPACER PIECE	DISTANZSTUECK		
18	726611214	4	RUBBER MOUNT	LAGER GUMMI		
19	4000383	4	HEX NUT ISO 4032 M10 10	SECHSKANTMUTTER		
20	406501314	4	HEX SCREW ISO 4017 M8X30 A4-70	SECHSKANTSCHRAUBE		

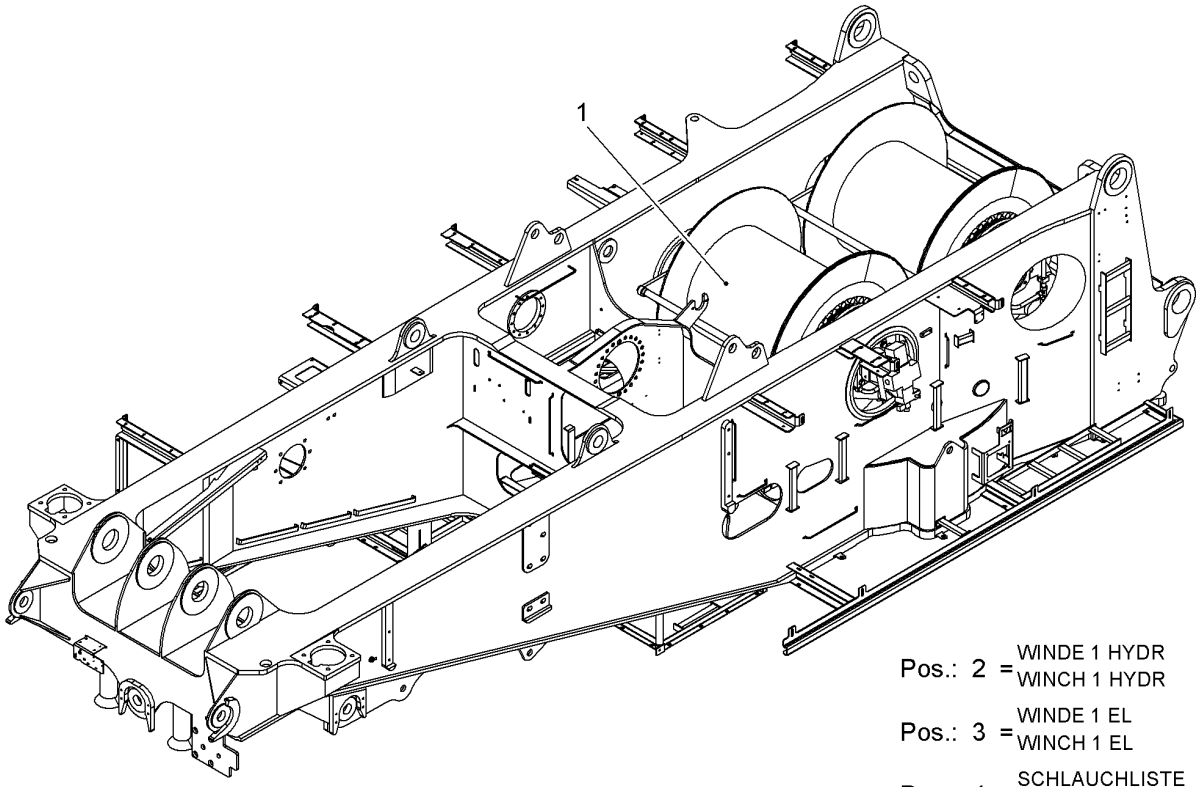

Pos.	Item	Quantity	Description	Bezeichnung	Serie	K
2	11262606	1	WINCH 1 HYDR ⇨ ❑ 485	WINDE 1 HYDR		
3	11216342	1	WINCH 1 EL ⇨ ❑ 487	WINDE 1 EL		
4	11262609	1	HOSE LIST ⇨ ❑ 488	SCHLAUCHLISTE		
10	10530398	1	WINCH ⇨ ❑ 489	WINDE		
11	11220500	1	WINCHES INSTALLATION ⇨ ❑ 497	WINDEN EINBAU		

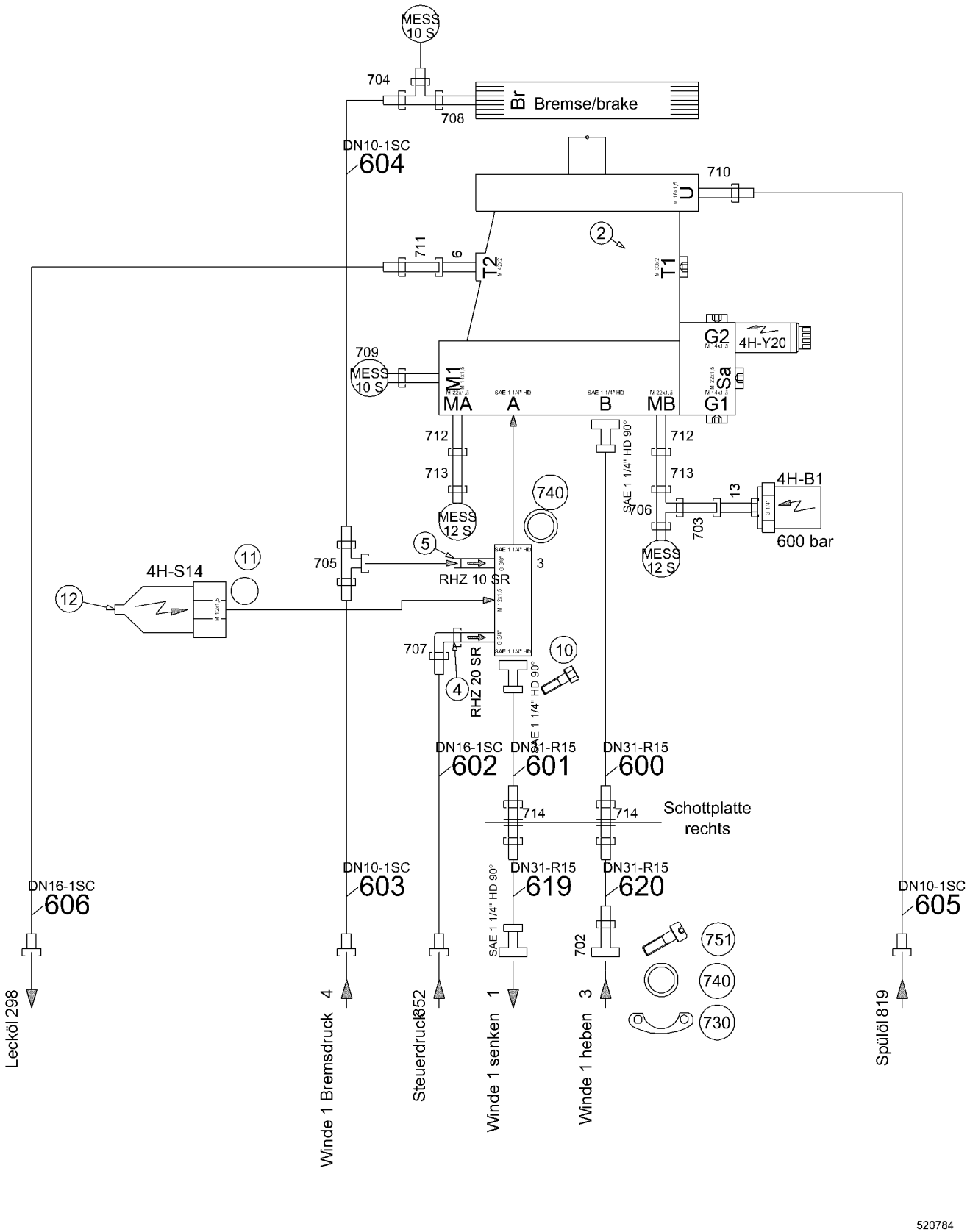
MESS 10 S
704
708
Br Bremse/brake
DN10-1SC
604
710
U
2
711
6
T2
T1
G2
4H-Y20
709
MESS 10 S
M1
Sa
MA
A
B
MB
G1
712
713
712
713
740
SAE 1 1/4" HD 90°
706
13
4H-B1
703
600 bar
MESS 12 S
MESS 12 S
5
705
11
4H-S14
12
RHZ 10 SR
3
707
10
4
RHZ 20 SR
SAE 1 1/4" HD 90°
DN16-1SC
602
DN31-R15
601
DN31-R15
600
714
714
Schottplatte rechts
DN16-1SC
606
DN10-1SC
603
DN31-R15
619
DN31-R15
620
DN10-1SC
605
SAE 1 1/4" HD 90°
702
751
740
730
Lecköl 298
Winde 1 Bremsdruck 4
Steuerdruck 352
Winde 1 senken 1
Winde 1 heben 3
Spülöl 819
520784

Pos.	Item	Quantity	Description	Bezeichnung	Serie	K
2	11251232	1	VARIABLE DISPLACEMENT MOTOR	V.MOTOR		
4	510493714	1	NON-RETURN VALVE	RUECKSCHLAGVENTIL		
5	511458814	1	NON-RETURN VALVE	RUECKSCHLAGVENTIL		
10	10539307	4	HEX SCREW ISO 4017 M14X90 10.9	SECHSKANTSCHRAUBE		
11	710069314	1	SEALING RING	DICHTRING		
12	10352119	1	PRESSURE SWITCH ON	DRUCKSCHALTER EINSCHALTE		
13	289031614	1	SPECIAL THREADED UNION	SONDERVERSCHRAUBUNG		
700	510694514	2	GAUGE CONNECTION	MESSSTUTZEN		
701	510664814	2	GAUGE CONNECTION	MESSSTUTZEN		
702	510702414	1	FITTING	VERSCHRAUBUNG		
703	481930514	1	FITTING	VERSCHRAUBUNG		
704	7367776	1	FITTING	VERSCHRAUBUNG		
705	482431314	1	FITTING	VERSCHRAUBUNG		
706	482431414	1	FITTING	VERSCHRAUBUNG		
707	7407108	1	FITTING	VERSCHRAUBUNG		
708	471004614	1	FITTING	VERSCHRAUBUNG		
709	471008214	1	FITTING	VERSCHRAUBUNG		
710	471030708	1	FITTING	VERSCHRAUBUNG		
711	247009702	1	FITTING	VERSCHRAUBUNG		
712	7622060	2	FITTING	VERSCHRAUBUNG		
713	485433314	2	FITTING	VERSCHRAUBUNG		
714	474033014	2	FITTING	VERSCHRAUBUNG		
730	510586614	8	FLANGE HALF	FLANSCHHAELFTE		
740	10472425	5	RECTANGULAR SECTION RING	RECHTECKRING		
750	10539300	8	HEX SCREW ISO 4017 M14X45 10.9	SECHSKANTSCHRAUBE		
751	10544044	4	SOCKET HEAD SCREW ISO 4762 M14X45 10.9	ZYLINDERSCHRAUBE		

OHNE BILD
WITHOUT ILLUSTRATION
SANS PLANCHE
SIN FIG.
SEM ILUSTRAÇÃO
БЕЗ ИЗОБРАЖЕНИЯ

600000

Pos.	Item	Quantity	Description	Bezeichnung	Serie	K
1	606279214	1	GEAR CAM LIMITSWITCH	GETRIEBENOCKENENDSCHALTE		

ACHTUNG !
ATTENTION !
ATTENTION !
ATENCIÓN !
ATENÇÃO !
ВНИМАНИЕ

Für Schlauchbestellungen kann über die Schlauchnummer, in der entsprechenden Schlauchliste, die Identnummer festgestellt werden.

For ordering flexible hoses you can find the identification number through the hose-number in the corresponding hose-list.

Pour des ordres de tuyau flexible le nombre d'identification on voit dans la liste de tuyau flexible correspondente.

Para el pedido de manguera, indicar el número de identificación de la manguera de la lista respectiva.

Para se encomendar uma mangueira, consulte o número de identificaçao na respectiva lista de mangueiras.

Для оформления заказов на шланги/рукавы идент. № может быть определен при помощи номера шланга/рукава, указанного в соотетствующем перечне шлангов/рукавов.

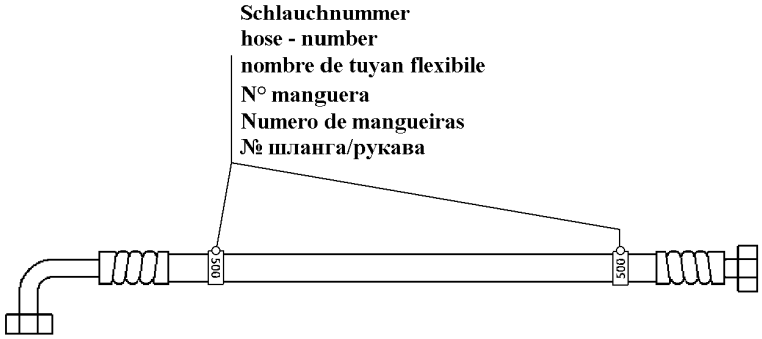

500000

Pos.	Item	Quantity	Description	Bezeichnung	Serie	K
600	995943114	1	HOSE CPL	SCHLAUCH KPL		
601	996026214	1	HOSE CPL	SCHLAUCH KPL		
602	991391814	1	HOSE CPL	SCHLAUCH KPL		
603	996367614	1	HOSE CPL	SCHLAUCH KPL		
604	992511514	1	HOSE CPL	SCHLAUCH KPL		
605	911108414	1	HOSE CPL	SCHLAUCH KPL		
606	928536514	1	HOSE CPL	SCHLAUCH KPL		
619	995943514	1	HOSE CPL	SCHLAUCH KPL		
620	995943614	1	HOSE CPL	SCHLAUCH KPL		

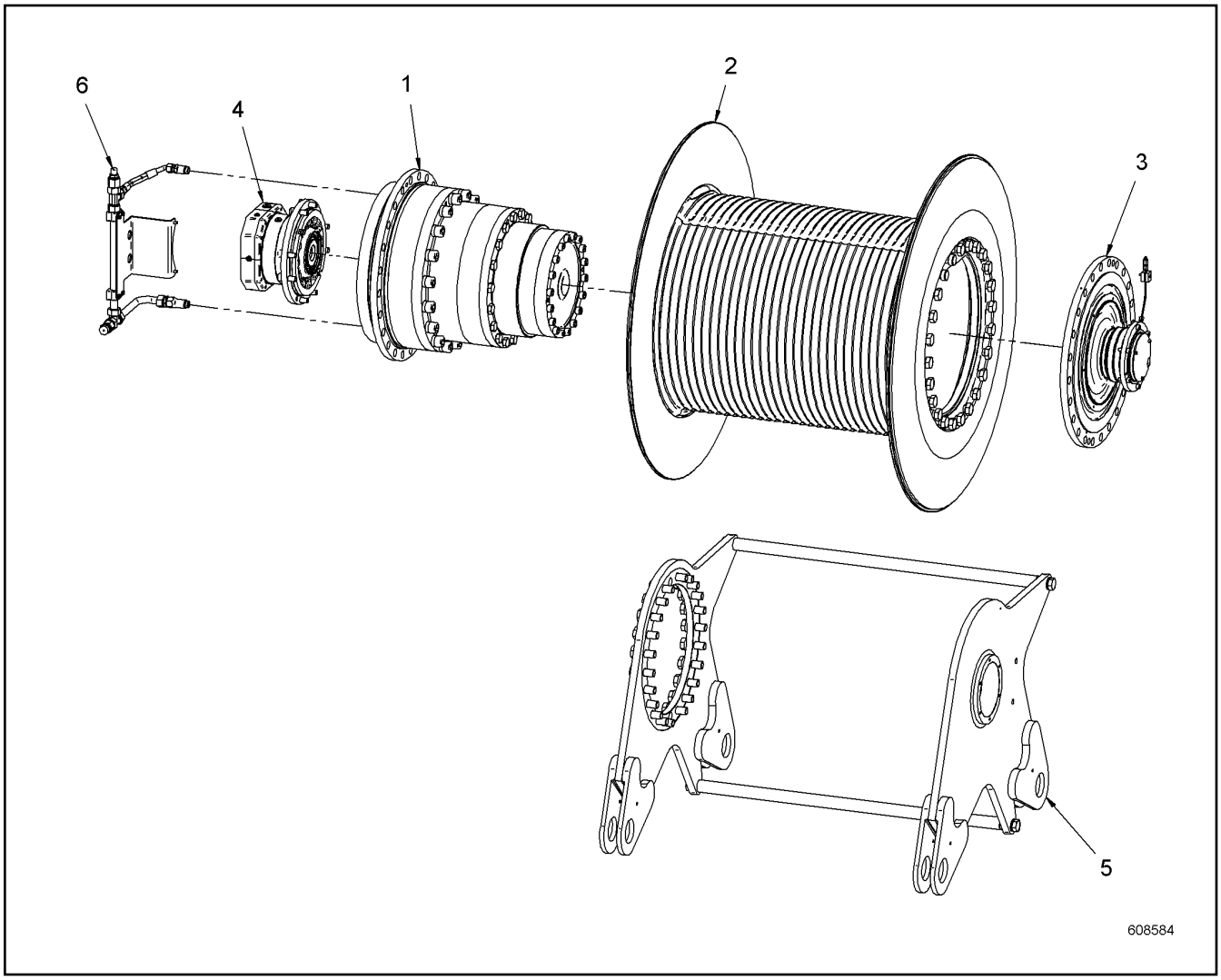

Pos.	Item	Quantity	Description	Bezeichnung	Serie	K
1	11893213	1	GEARBOX ⇨ ❑ 490	GETRIEBE		
2	11231269	1	ROPE DRUM ⇨ ❑ 492	SEILTROMMEL		
3	11231270	1	FLANGE BEARING ⇨ ❑ 493	FLANSCHLAGER		
4	11893214	1	DRIVE ⇨ ❑ 494	ANTRIEB		
5	11893215	1	WINCH TRESTLE ⇨ ❑ 495	WINDENBOCK		
6	11893216	1	OIL LINE ⇨ ❑ 496	OELLEITUNG		

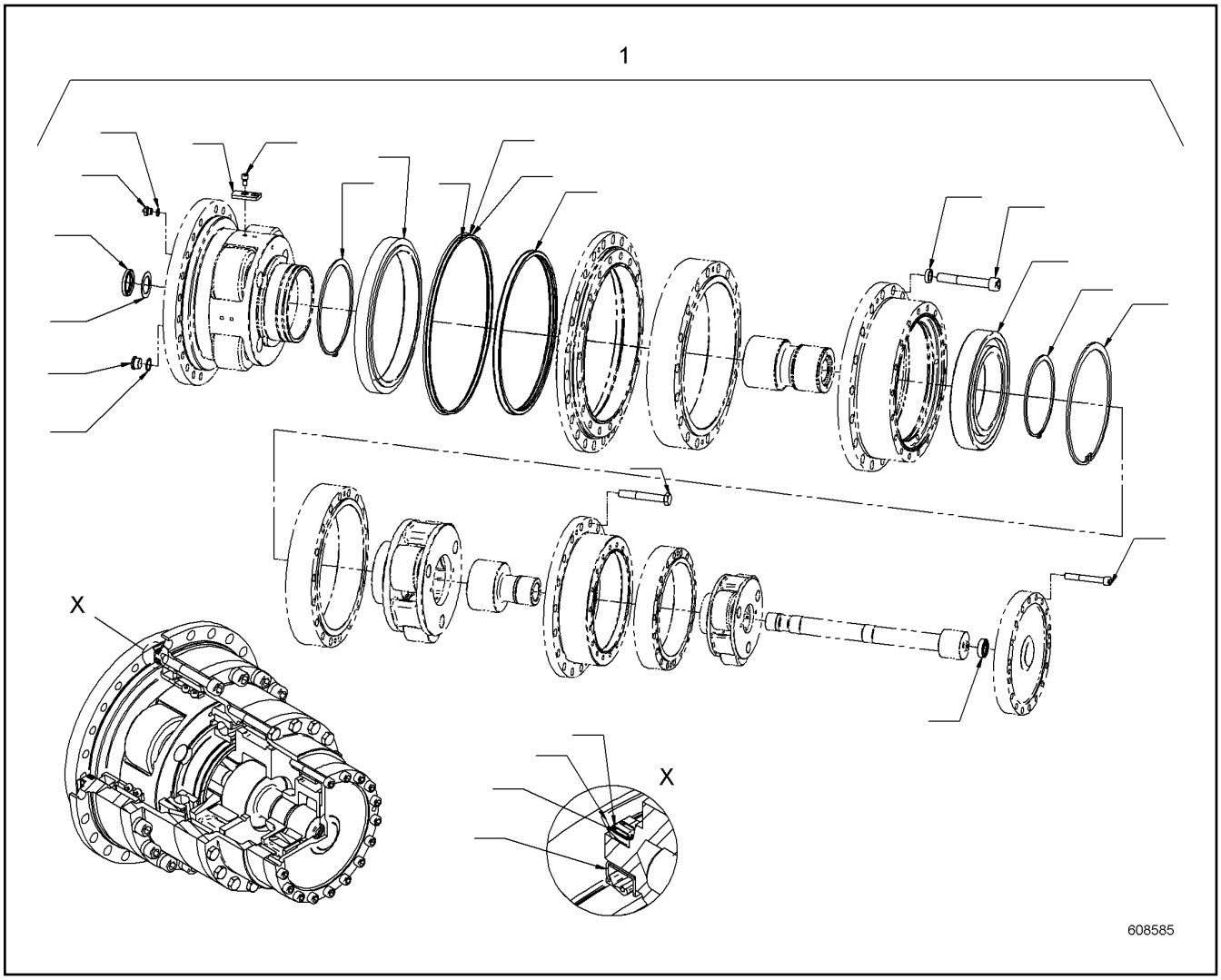

Pos.	Item	Quantity	Description	Bezeichnung	Serie	K
1	11893228	1	REPAIR KIT ⇨ ❑ 491	REPARATURSATZ		

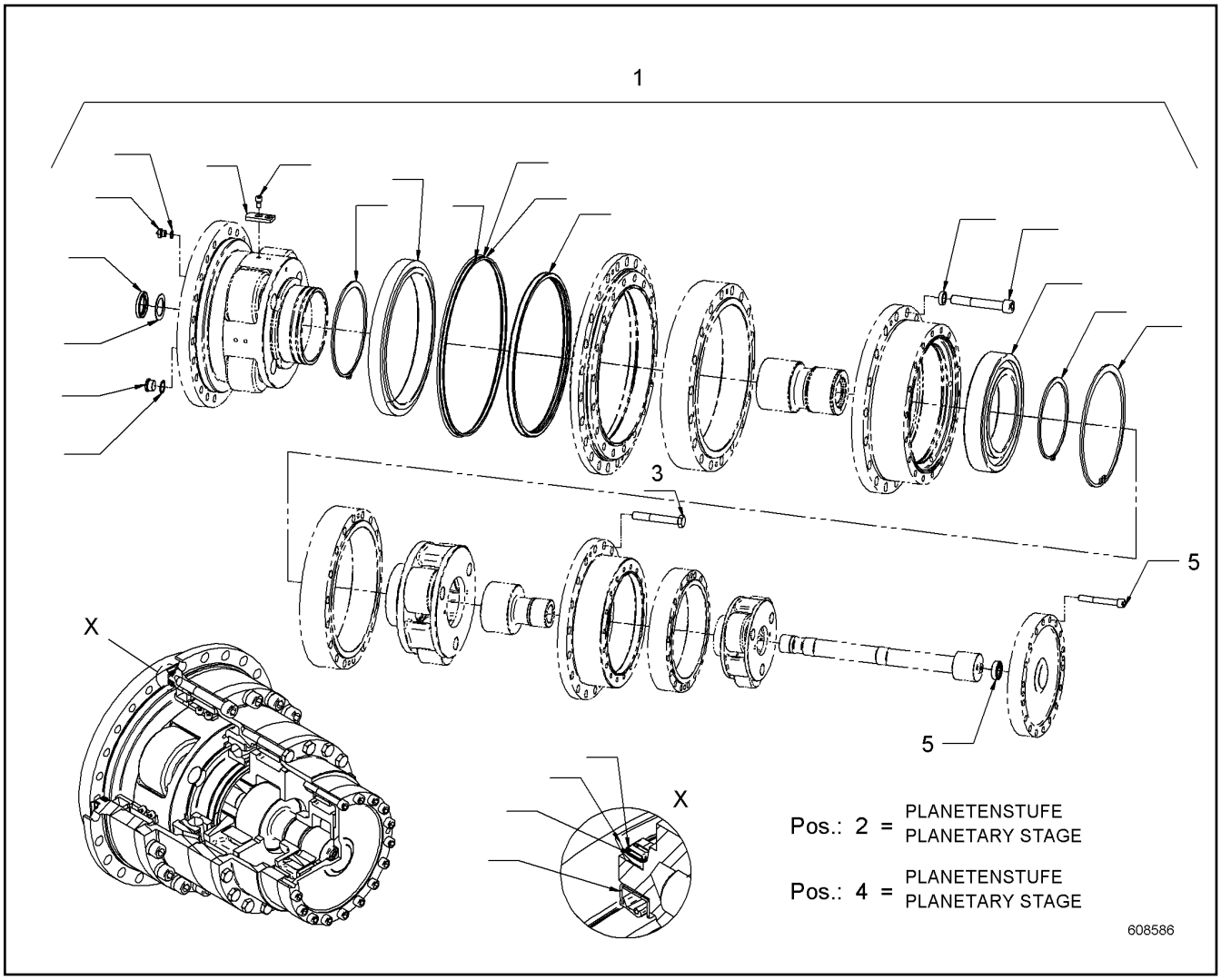

Pos.	Item	Quantity	Description	Bezeichnung	Serie	K
1	11233487	1	REPAIR KIT	REPARATURSATZ		
2	11893250	1	PLANETARY STAGE	PLANETENSTUFE		
3	11231317	1	REPAIR KIT	REPARATURSATZ		
4	11893252	1	PLANETARY STAGE	PLANETENSTUFE		
5	11231319	1	REPAIR KIT	REPARATURSATZ		

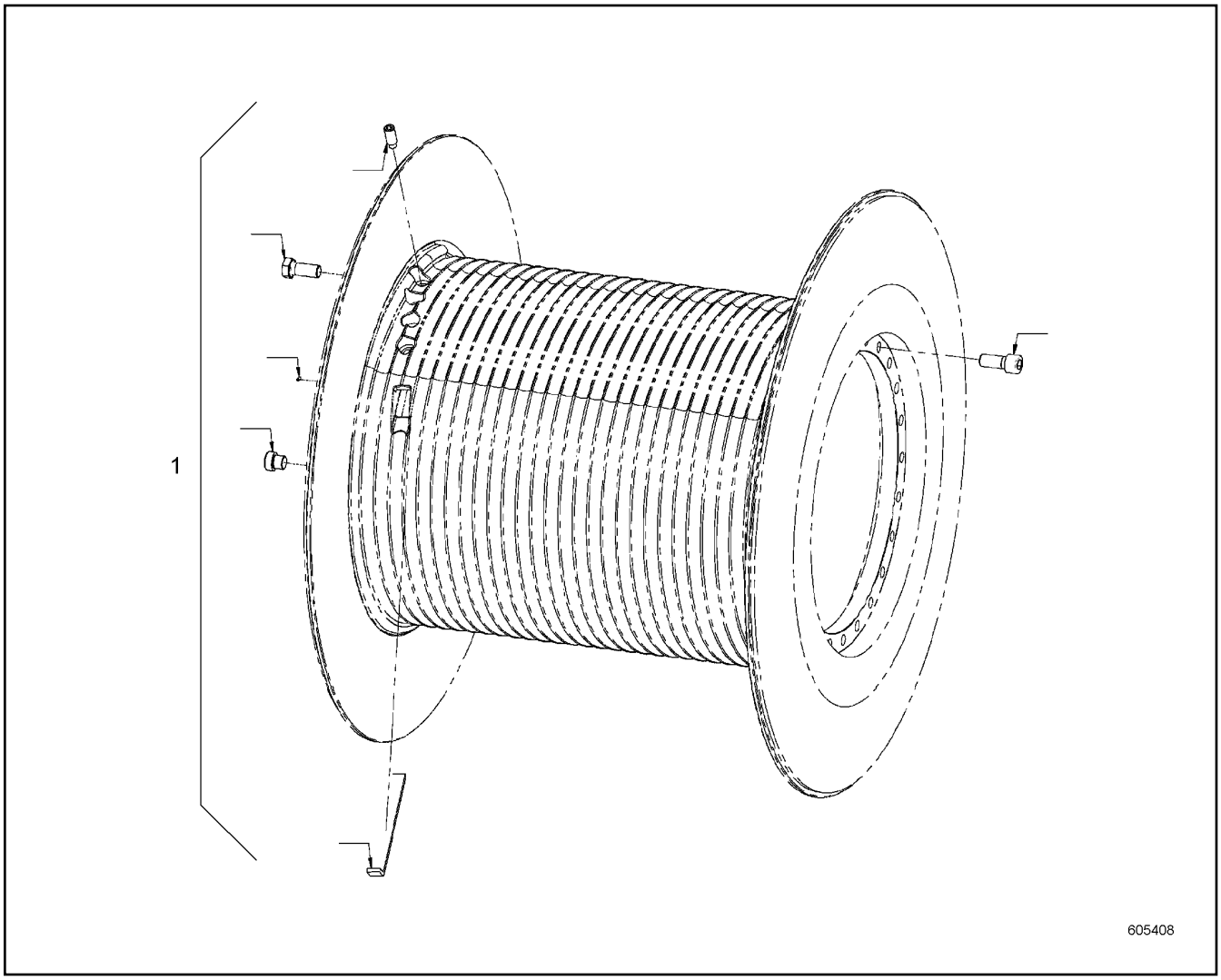

Pos.	Item	Quantity	Description	Bezeichnung	Serie	K
1	11231322	1	REPAIR KIT	REPARATURSATZ		

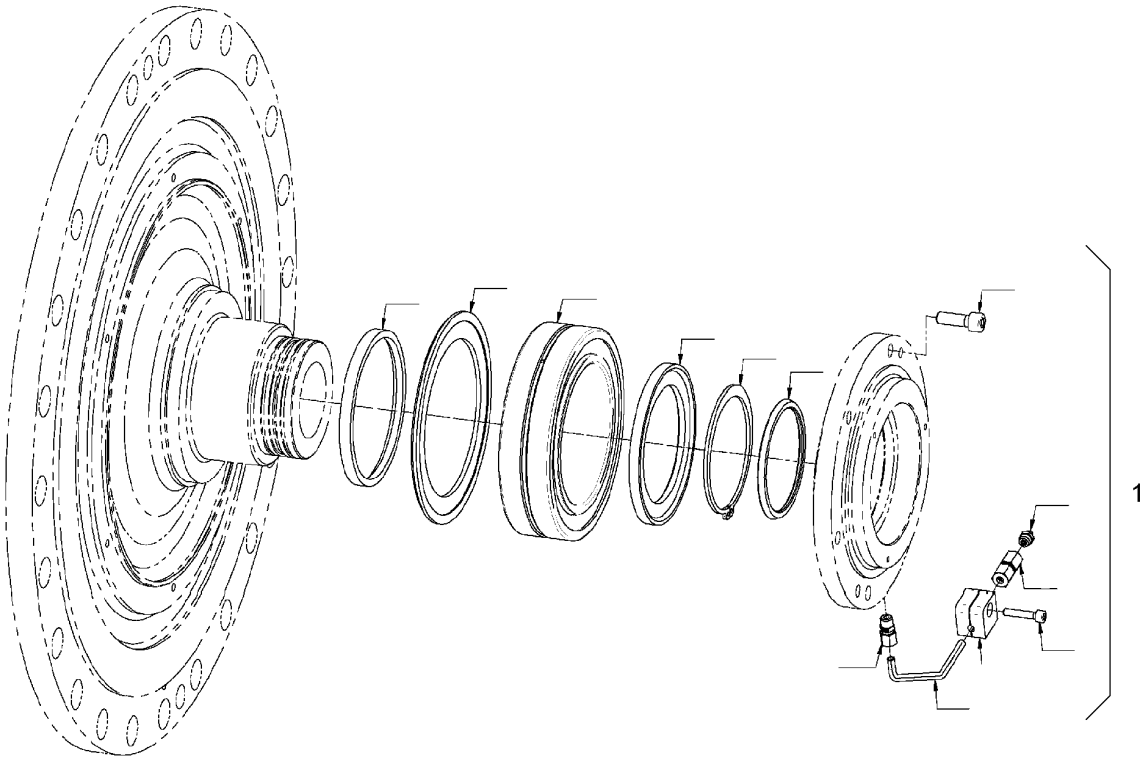

Pos.	Item	Quantity	Description	Bezeichnung	Serie	K
1	11231336	1	REPAIR KIT	REPARATURSATZ		

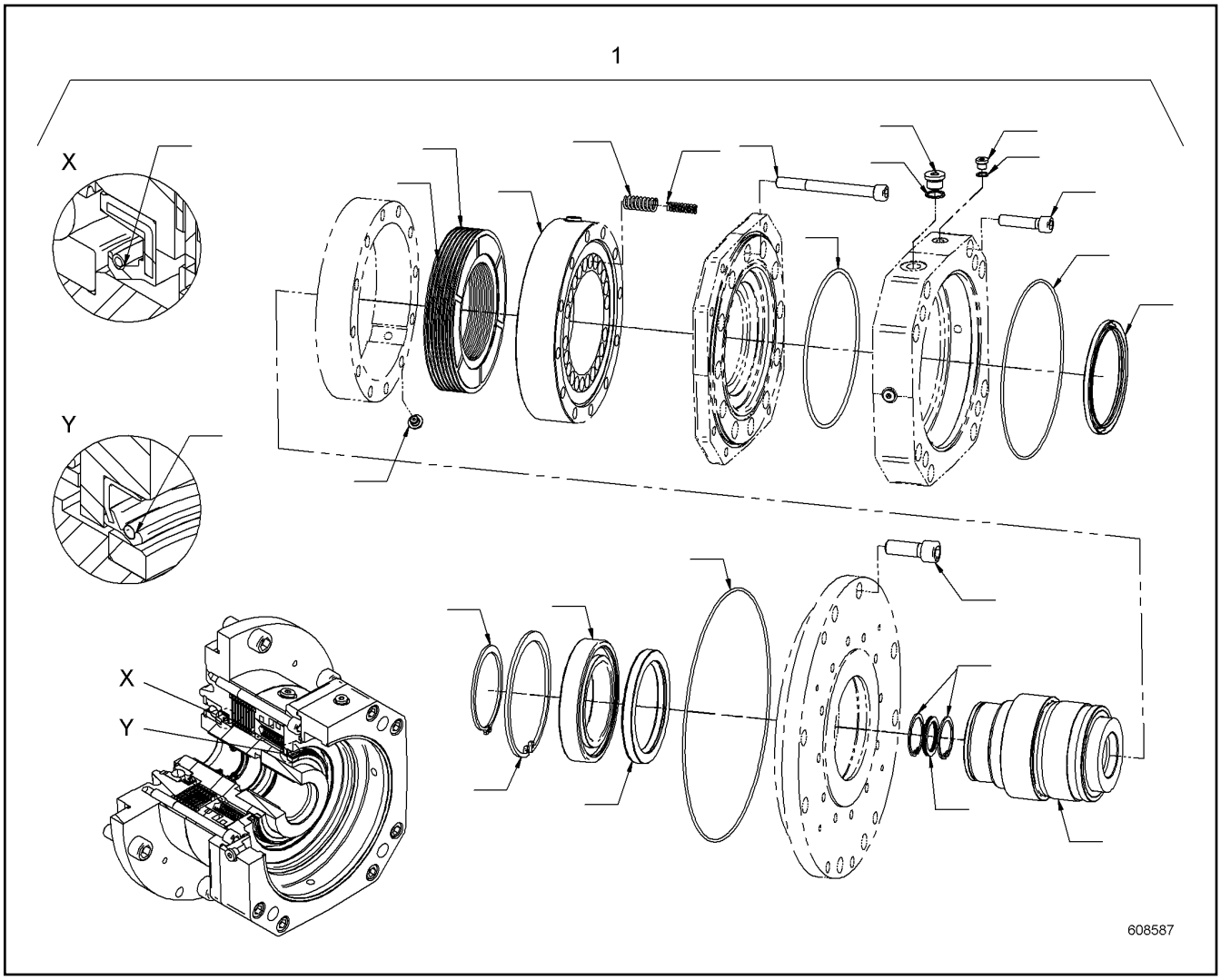

Pos.	Item	Quantity	Description	Bezeichnung	Serie	K
1	11893253	1	REPAIR SET DRIVE	RS ANTRIEB		

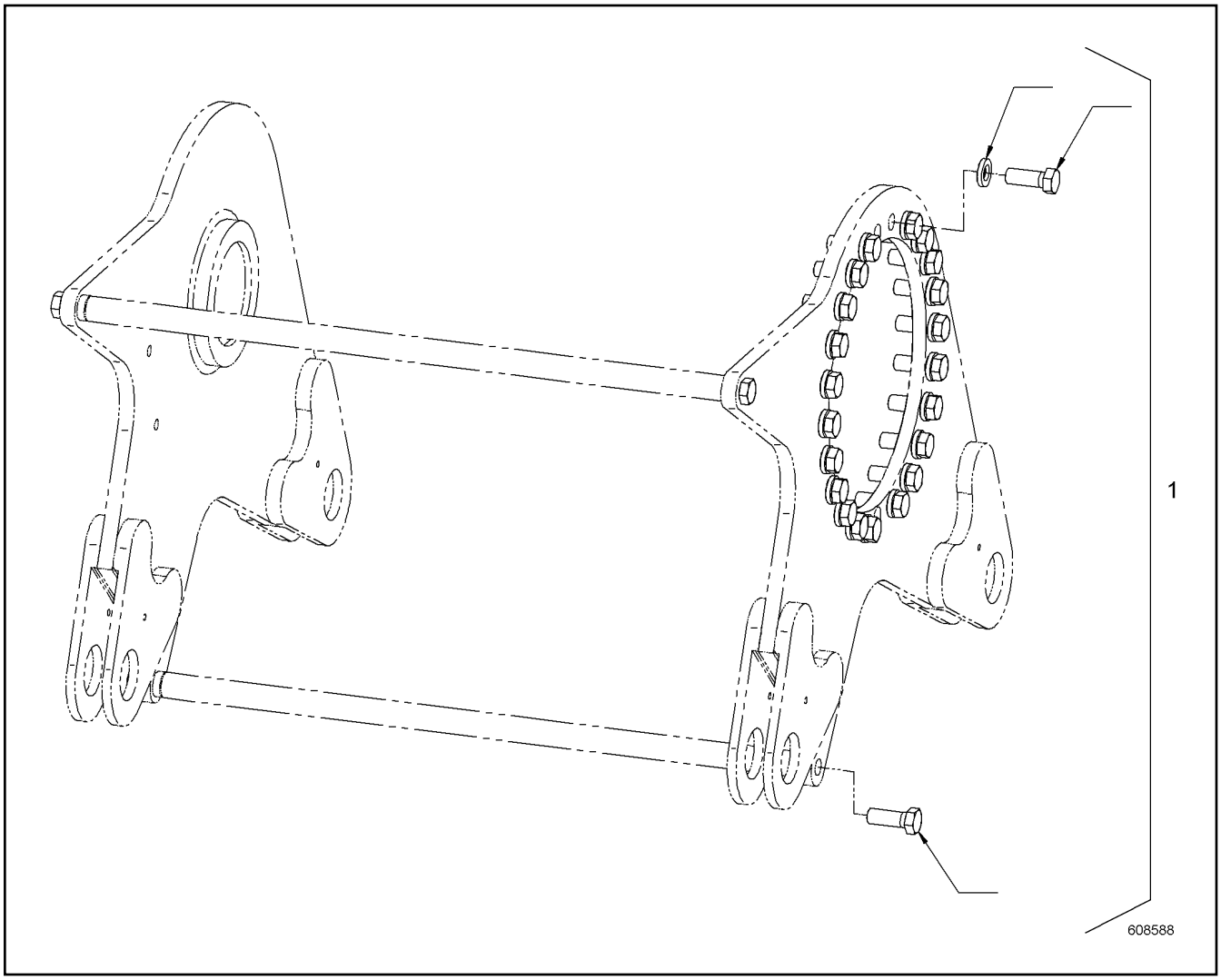

Pos.	Item	Quantity	Description	Bezeichnung	Serie	K
1	11893254	1	REPAIR KIT	REPARATURSATZ		

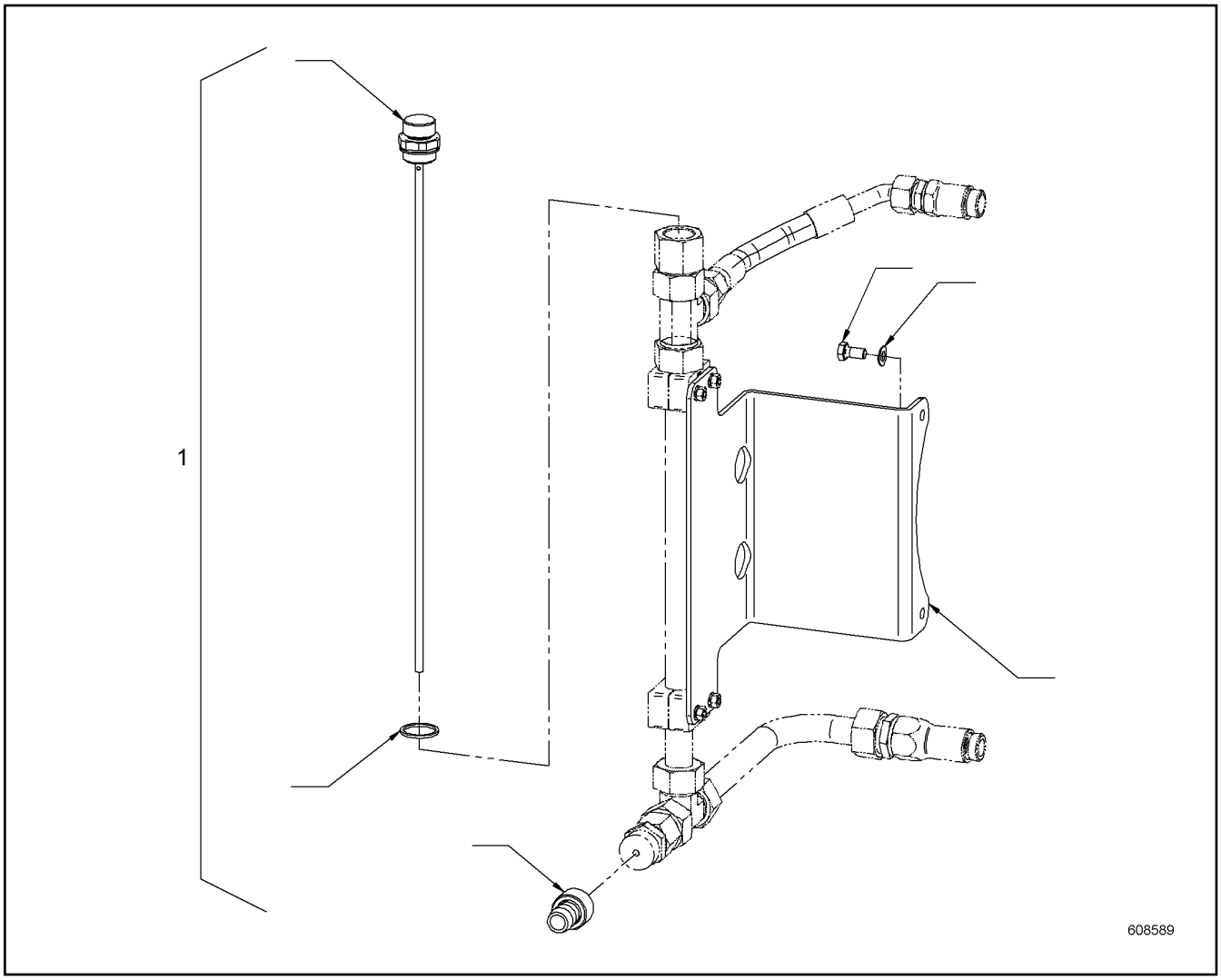

Pos.	Item	Quantity	Description	Bezeichnung	Serie	K
1	11893255	1	REPAIR KIT	REPARATURSATZ		

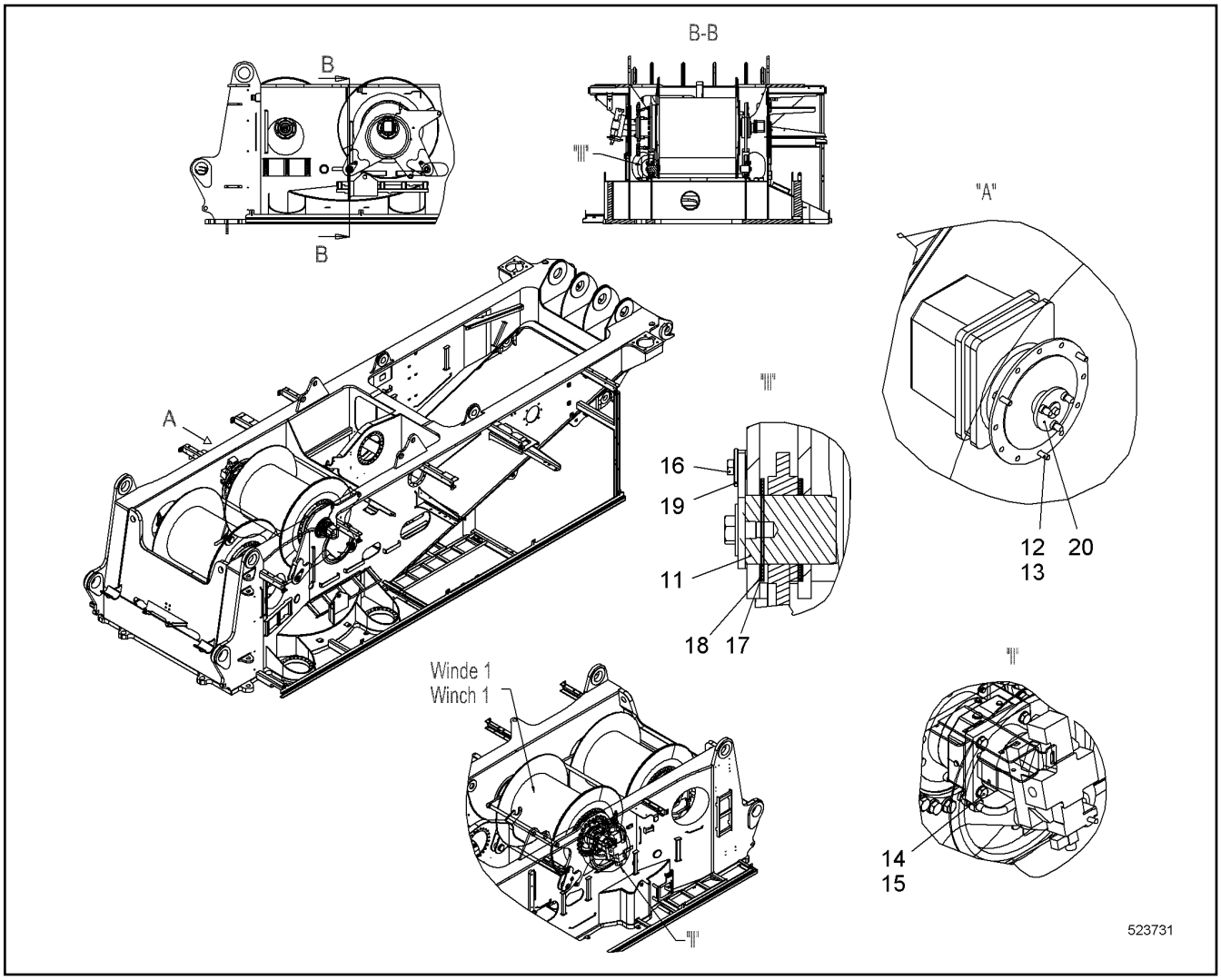

Pos.	Item	Quantity	Description	Bezeichnung	Serie	K
11	10574629	4	PIN CPL ⇨ ❑ 498	BOLZEN KPL		
12	420000414	3	WASHER ISO 7089 6 A4	SCHEIBE		
13	406532614	3	HEX SCREW ISO 4017 M6X20 A4-70	SECHSKANTSCHRAUBE		
14	10544174	4	WASHER ISO 7089 20	SCHEIBE		
15	10543924	4	HEX SCREW ISO 4017 M20X60 10.9	SECHSKANTSCHRAUBE		
16	406517314	4	HEX SCREW ISO 4017 M12X30 A4-70	SECHSKANTSCHRAUBE		
17	954432003	10	PLATE	BLECH		
18	954486503	6	PLATE	BLECH		
19	970726703	4	BUSHING 13/28X15 S355J2;EN 10025-2	BUCHSE		
20	606279014	1	DRIVE FLANGE	ANTRIEBSFLANSCH		

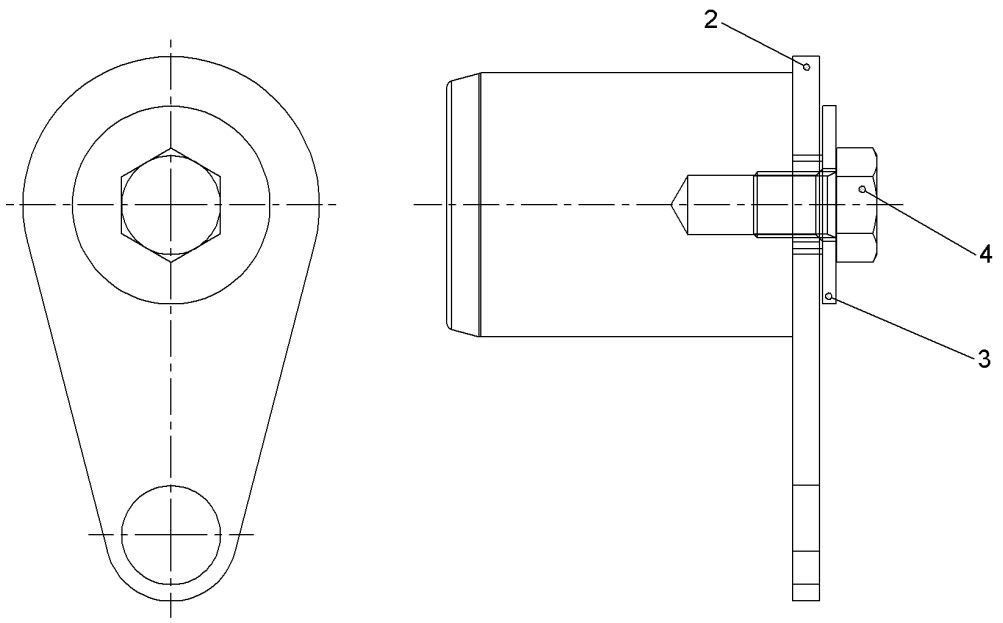

Pos.	Item	Quantity	Description	Bezeichnung	Serie	K
1	10574630	1	PIN	BOLZEN		
2	10574631	1	WP	WP		
3	10544175	1	WASHER ISO 7093-1 20	SCHEIBE		
4	10543917	1	HEX SCREW ISO 4017 M20X25 10.9	SECHSKANTSCHRAUBE		

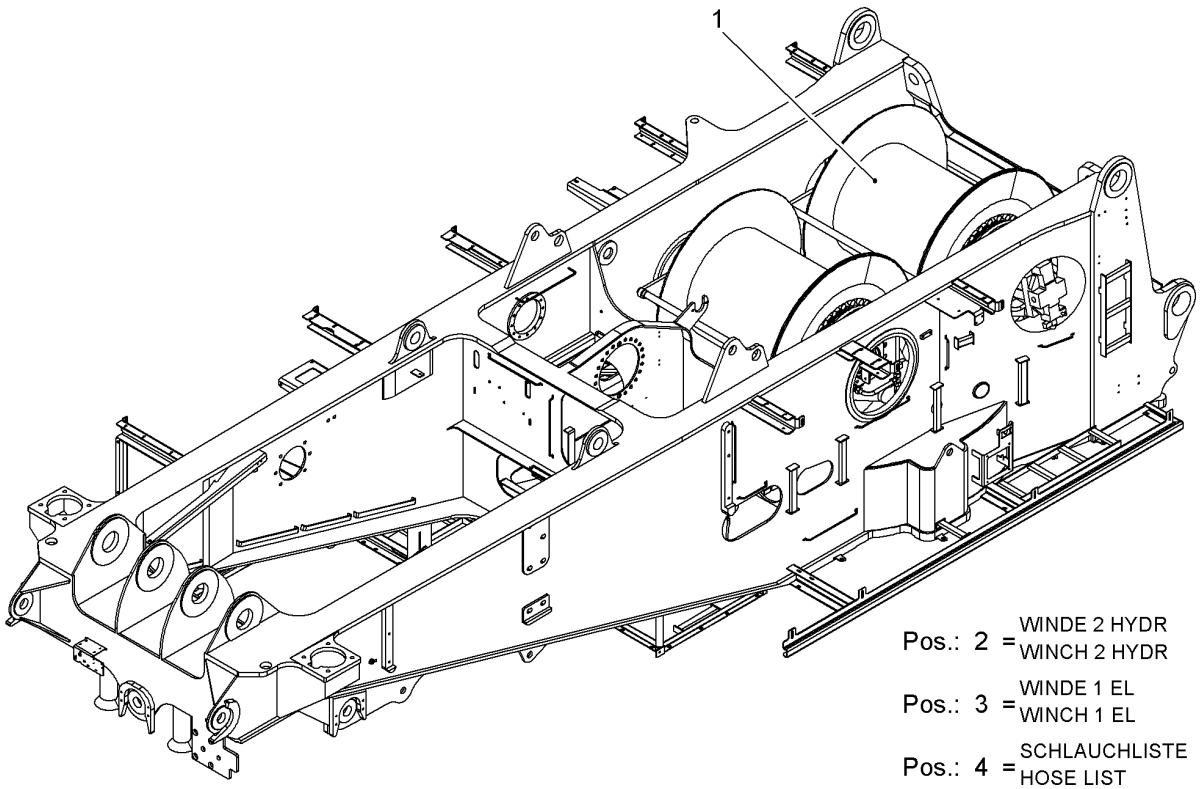

Pos.	Item	Quantity	Description	Bezeichnung	Serie	K
2	11262611	1	WINCH 2 HYDR ⇨ ❑ 500	WINDE 2 HYDR		
3	11216342	1	WINCH 1 EL ⇨ ❑ 487	WINDE 1 EL		
4	11262612	1	HOSE LIST ⇨ ❑ 502	SCHLAUCHLISTE		
10	10530398	1	WINCH ⇨ ❑ 489	WINDE		
11	11220501	1	WINCHES INSTALLATION ⇨ ❑ 503	WINDEN EINBAU		

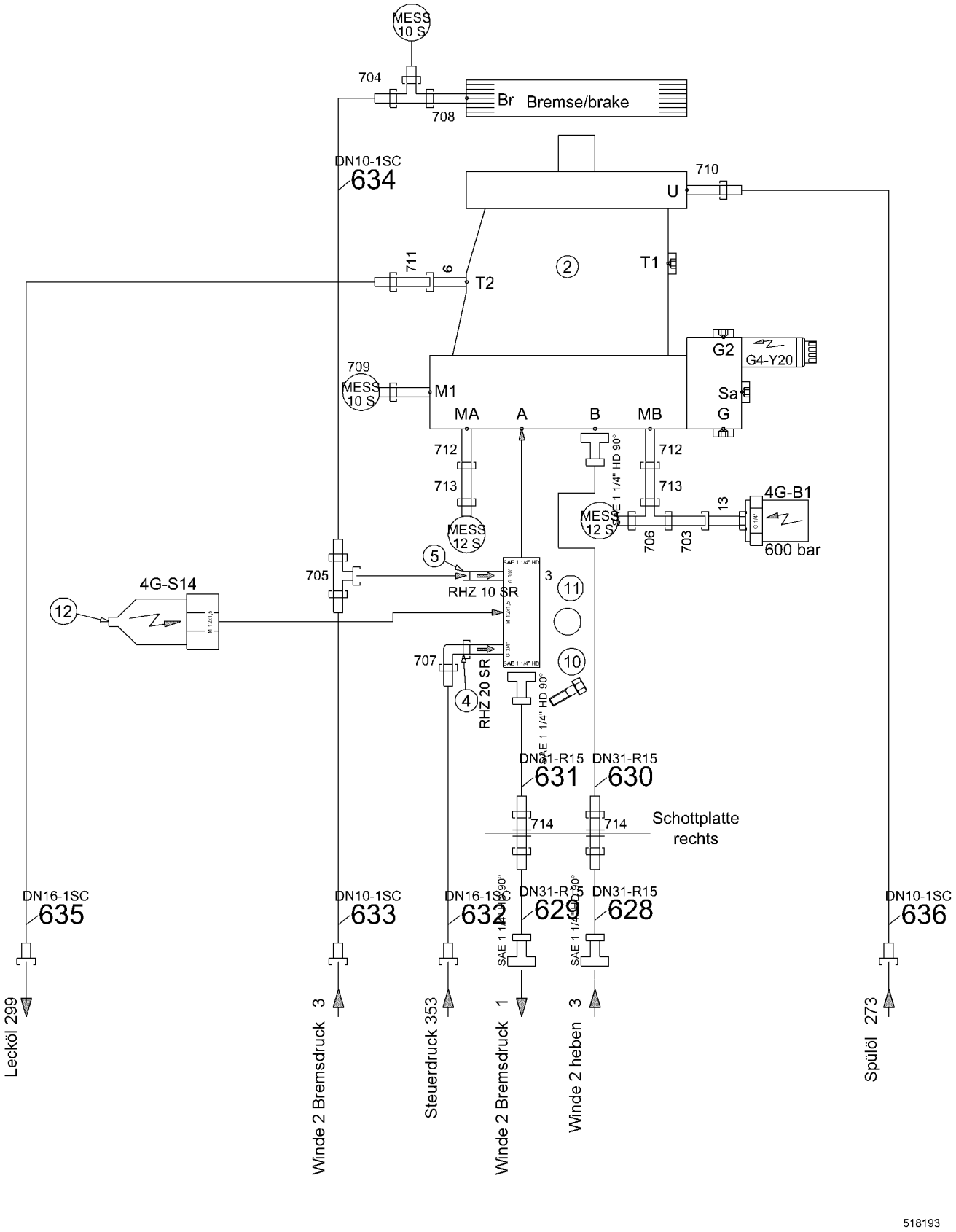
MESS 10 S
704
708
Br
Bremse/brake
DN10-1SC
634
710
U
711
6
T2
2
T1
709
MESS 10 S
M1
MA
A
B
MB
G2
G4-Y20
Sa
G
712
713
712
713
SAE 1 1/4" HD 90°
MESS 12 S
706
703
13
4G-B1
600 bar
5
705
RHZ 10 SR
3
11
4G-S14
12
707
4
RHZ 20 SR
10
SAE 1 1/4" HD 90°
DN31-R15
631
DN31-R15
630
714
714
Schottplatte
rechts
DN16-1SC
635
DN10-1SC
633
DN16-1SC
632
DN31-R15
629
DN31-R15
628
DN10-1SC
636
Lecköl 299
Winde 2 Bremsdruck 3
Steuerdruck 353
Winde 2 Bremsdruck 1
Winde 2 heben 3
Spülöl 273
518193

Pos.	Item	Quantity	Description	Bezeichnung	Serie	K
2	11251232	1	VARIABLE DISPLACEMENT MOTOR	V.MOTOR		
4	510493714	1	NON-RETURN VALVE	RUECKSCHLAGVENTIL		
5	511458814	1	NON-RETURN VALVE	RUECKSCHLAGVENTIL		
10	10539307	4	HEX SCREW ISO 4017 M14X90 10.9	SECHSKANTSCHRAUBE		
11	710069314	1	SEALING RING	DICHTRING		
12	10352119	1	PRESSURE SWITCH ON	DRUCKSCHALTER EINSCHALTE		
13	289031614	1	SPECIAL THREADED UNION	SONDERVERSCHRAUBUNG		
700	510694514	2	GAUGE CONNECTION	MESSSTUTZEN		
701	510664814	2	GAUGE CONNECTION	MESSSTUTZEN		
703	481930514	1	FITTING	VERSCHRAUBUNG		
704	7367776	1	FITTING	VERSCHRAUBUNG		
705	482431314	1	FITTING	VERSCHRAUBUNG		
706	482431414	1	FITTING	VERSCHRAUBUNG		
707	7407108	1	FITTING	VERSCHRAUBUNG		
708	471004614	1	FITTING	VERSCHRAUBUNG		
709	471008214	1	FITTING	VERSCHRAUBUNG		
710	471030708	1	FITTING	VERSCHRAUBUNG		
711	247009702	1	FITTING	VERSCHRAUBUNG		
712	7622060	2	FITTING	VERSCHRAUBUNG		
713	485433314	2	FITTING	VERSCHRAUBUNG		
714	474033014	2	FITTING	VERSCHRAUBUNG		
730	510586614	8	FLANGE HALF	FLANSCHHAELFTE		
740	10472425	5	RECTANGULAR SECTION RING	RECHTECKRING		
750	10539300	16	HEX SCREW ISO 4017 M14X45 10.9	SECHSKANTSCHRAUBE		

ACHTUNG !
ATTENTION !
ATTENTION !
ATENCIÓN !
ATENÇÃO !
ВНИМАНИЕ

Für Schlauchbestellungen kann über die Schlauchnummer, in der entsprechenden Schlauchliste, die Identnummer festgestellt werden.

For ordering flexible hoses you can find the identification number through the hose-number in the corresponding hose-list.

Pour des ordres de tuyau flexible le nombre d'identification on voit dans la liste de tuyau flexible correspondente.

Para el pedido de manguera, indicar el número de identificación de la manguera de la lista respectiva.

Para se encomendar uma mangueira, consulte o número de identificaçao na respectiva lista de mangueiras.

Для оформления заказов на шланги/рукавы идент. № может быть определен при помощи номера шланга/рукава, указанного в соотетствующем перечне шлангов/рукавов.

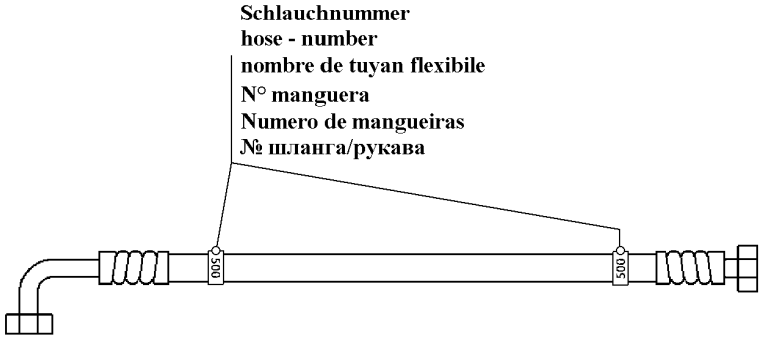

500000

Pos.	Item	Quantity	Description	Bezeichnung	Serie	K
628	995943714	1	HOSE CPL	SCHLAUCH KPL		
629	995943814	1	HOSE CPL	SCHLAUCH KPL		
630	995991314	1	HOSE CPL	SCHLAUCH KPL		
631	995944014	1	HOSE CPL	SCHLAUCH KPL		
632	995944114	1	HOSE CPL	SCHLAUCH KPL		
633	993685614	1	HOSE CPL	SCHLAUCH KPL		
634	992879314	1	HOSE CPL	SCHLAUCH KPL		
635	919757114	1	HOSE CPL	SCHLAUCH KPL		
636	994905314	1	HOSE CPL	SCHLAUCH KPL		

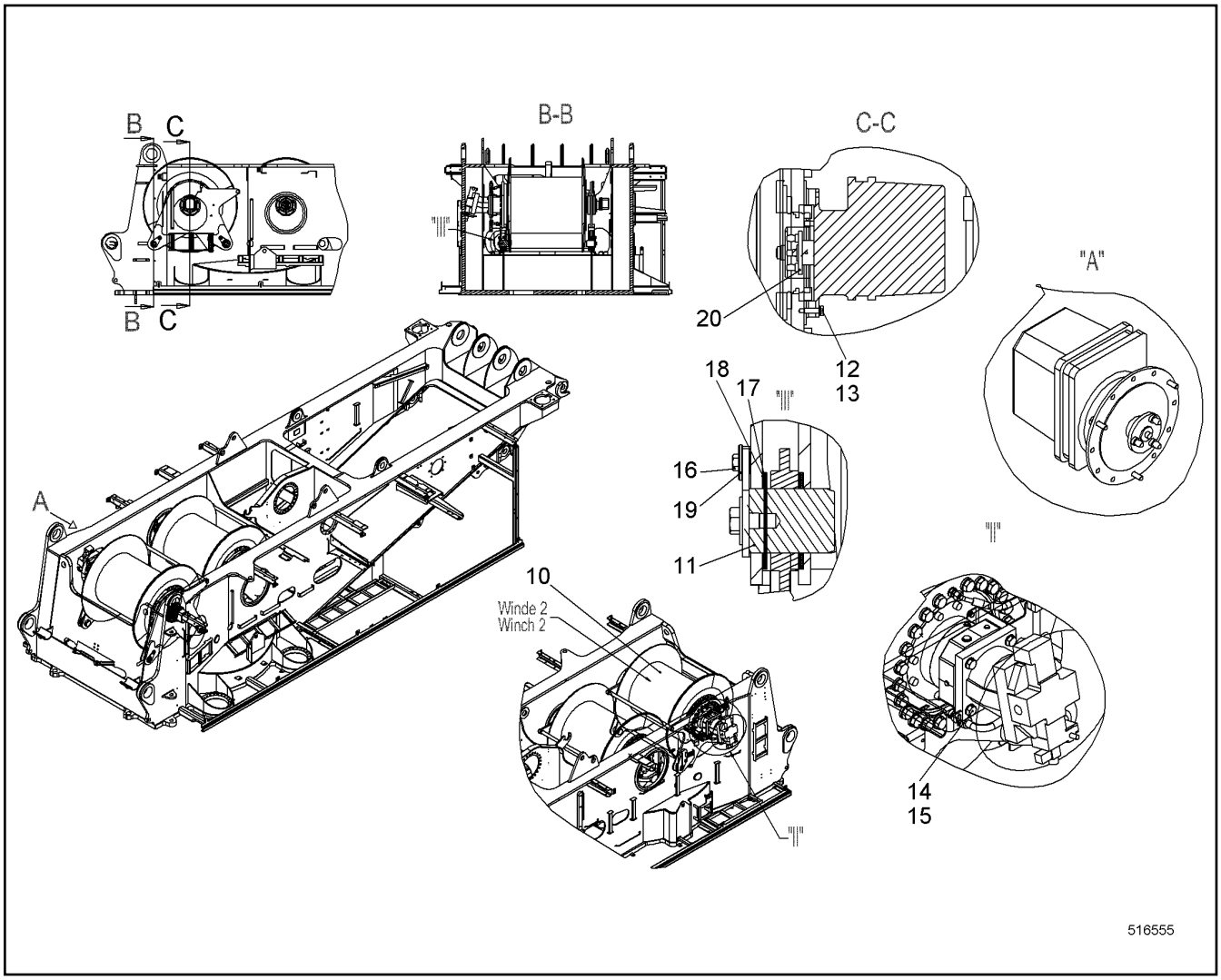

Pos.	Item	Quantity	Description	Bezeichnung	Serie	K
11	10574629	4	PIN CPL ⇨ ❑ 498	BOLZEN KPL		
12	420000414	3	WASHER ISO 7089 6 A4	SCHEIBE		
13	406532614	3	HEX SCREW ISO 4017 M6X20 A4-70	SECHSKANTSCHRAUBE		
14	10544174	4	WASHER ISO 7089 20	SCHEIBE		
15	10543924	4	HEX SCREW ISO 4017 M20X60 10.9	SECHSKANTSCHRAUBE		
16	406517314	4	HEX SCREW ISO 4017 M12X30 A4-70	SECHSKANTSCHRAUBE		
17	954432003	10	PLATE	BLECH		
18	954486503	6	PLATE	BLECH		
19	970726703	4	BUSHING 13/28X15 S355J2;EN 10025-2	BUCHSE		
20	606279014	1	DRIVE FLANGE	ANTRIEBSFLANSCH		

OHNE BILD
WITHOUT ILLUSTRATION
SANS PLANCHE
SIN FIG.
SEM ILUSTRAÇÃO
БЕЗ ИЗОБРАЖЕНИЯ

600000

Pos.	Item	Quantity	Description	Bezeichnung	Serie	K
1	10561838	1	TOOL ⇨ ❑ 505	WERKZEUG		
29	919023914	1	CABLE HYDR ⇨ ❑ 506	LEITUNG HYDR		
31	917665814	1	DRAIN HOSE CPL ⇨ ❑ 507	ABLASSSCHLAUCH KPL		
45	885392414	1	EXTENSION 1 " X 410MM	VERLAENGERUNG		
50	885391814	1	CROSS HANDLE 1 "	QUERGRIFF		
55	885380314	1	WRENCH SOCKET 36 X 1 "	STECKNUSS		
90	602707214	1	CABLE SOCK	KABELSTRUMPF		
91	602707414	1	CABLE SOCK	KABELSTRUMPF		
92	10222935	2	ROUND SLING	RUNDSCHLINGE		
93	790269114	1	ROUND SLING	RUNDSCHLINGE		
94	773954514	2	SHACKLE	SCHAEKEL		

OHNE BILD
WITHOUT ILLUSTRATION
SANS PLANCHE
SIN FIG.
SEM ILUSTRAÇÃO
БЕЗ ИЗОБРАЖЕНИЯ

600000

Pos.	Item	Quantity	Description	Bezeichnung	Serie	K
1	10560228	1	TOOL	WERKZEUG		
2	790042514	1	TOOL BOX	WERKZEUGKASTEN		
4	885602114	1	HAND LEVER PRESS 400B	HANDHEBELPRESSE		
5	790042214	1	HOSE LINE	SCHLAUCHLEITUNG		
6	790042914	1	HOSE LINE	SCHLAUCHLEITUNG		
7	750001114	1	PRESSURE GAUGE	MANOMETER		
8	750003414	1	PRESSURE GAUGE	MANOMETER		
9	7363730	2	PRESSURE GAUGE CONNECTION	MANOMETERANSCHLUSS		
10	510694314	2	PRESSUREGAUGE DIRECTCONNECTION	MANOMETERDIREKTANSCHLUS		
11	7002475	2	MEASURING HOSE	MESSSCHLAUCH		
12	790036914	1	CROWBAR 1200 MM	BRECHSTANGE		
13	885040114	1	SLEDGE HAMMER 5000G	VORSCHLAGHAMMER		
14	885400114	1	CROWBAR 600 MM	BRECHSTANGE		
15	789038114	1	LADDER	LEITER		
18	885045214	1	SOFT FACE HAMMER 60G	SCHONHAMMER		
19	773930114	1	SHACKLE	SCHAEKEL		
80	11949368	1	MOUNTING TOOL	MONTAGEWERKZEUG		

Pos.	Item	Quantity	Description	Bezeichnung	Serie	K
1	510682014	1	BALL VALVE	KUGELHAHN		
2	511704314	1	QUICK-FITTING THREAD COUPLING	SCHNELLVERSCHRAUBUNGSK		
295	928815314	1	HOSE CPL	SCHLAUCH KPL		
700	470002414	1	FITTING	VERSCHRAUBUNG		
701	471032808	1	FITTING	VERSCHRAUBUNG		
702	477400314	1	FITTING	VERSCHRAUBUNG		
703	477700414	1	FITTING	VERSCHRAUBUNG		
704	481930414	1	FITTING	VERSCHRAUBUNG		
705	485433414	1	FITTING	VERSCHRAUBUNG		

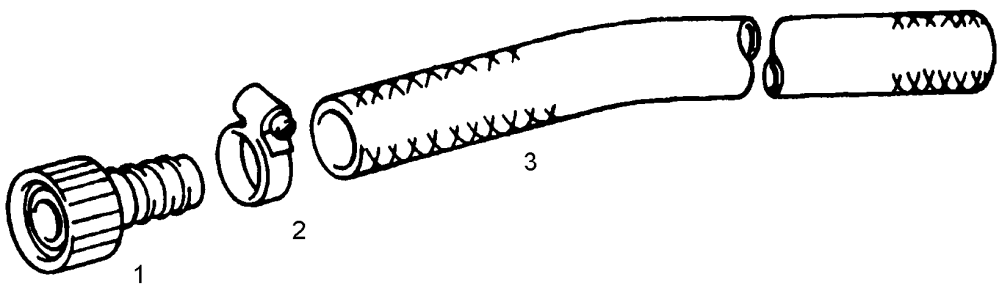

Pos.	Item	Quantity	Description	Bezeichnung	Serie	K
1	7402657	1	DRAIN COUPLING	ABLASSSTUTZEN		
2	4900778	1	HOSE CLAMP	SCHLAUCHSCHELLE		
3	7362451	2.5	HOSE	SCHLAUCH		

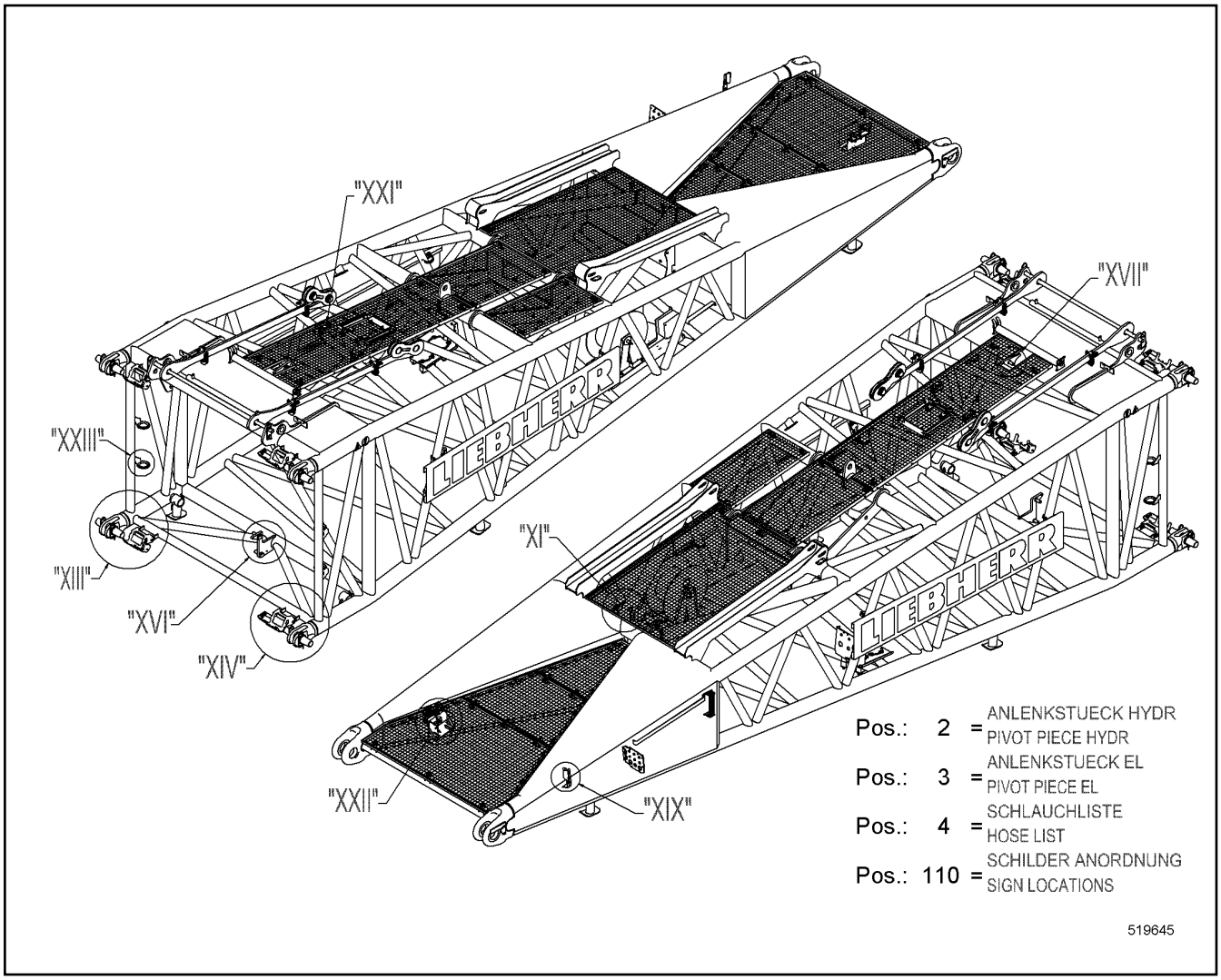

Pos.	Item	Quantity	Description	Bezeichnung	Serie	K
2	10518261	1	PIVOT PIECE HYDR ⇨ ❑ 512	ANLENKSTUECK HYDR		
3	11901509	1	PIVOT PIECE EL ⇨ ❑ 515	ANLENKSTUECK EL		
4	11232399	1	HOSE LIST ⇨ ❑ 520	SCHLAUCHLISTE		
10	11238202	1	PIVOT PIECE ST. CONST.	ANLENKSTUECK SCHWK		

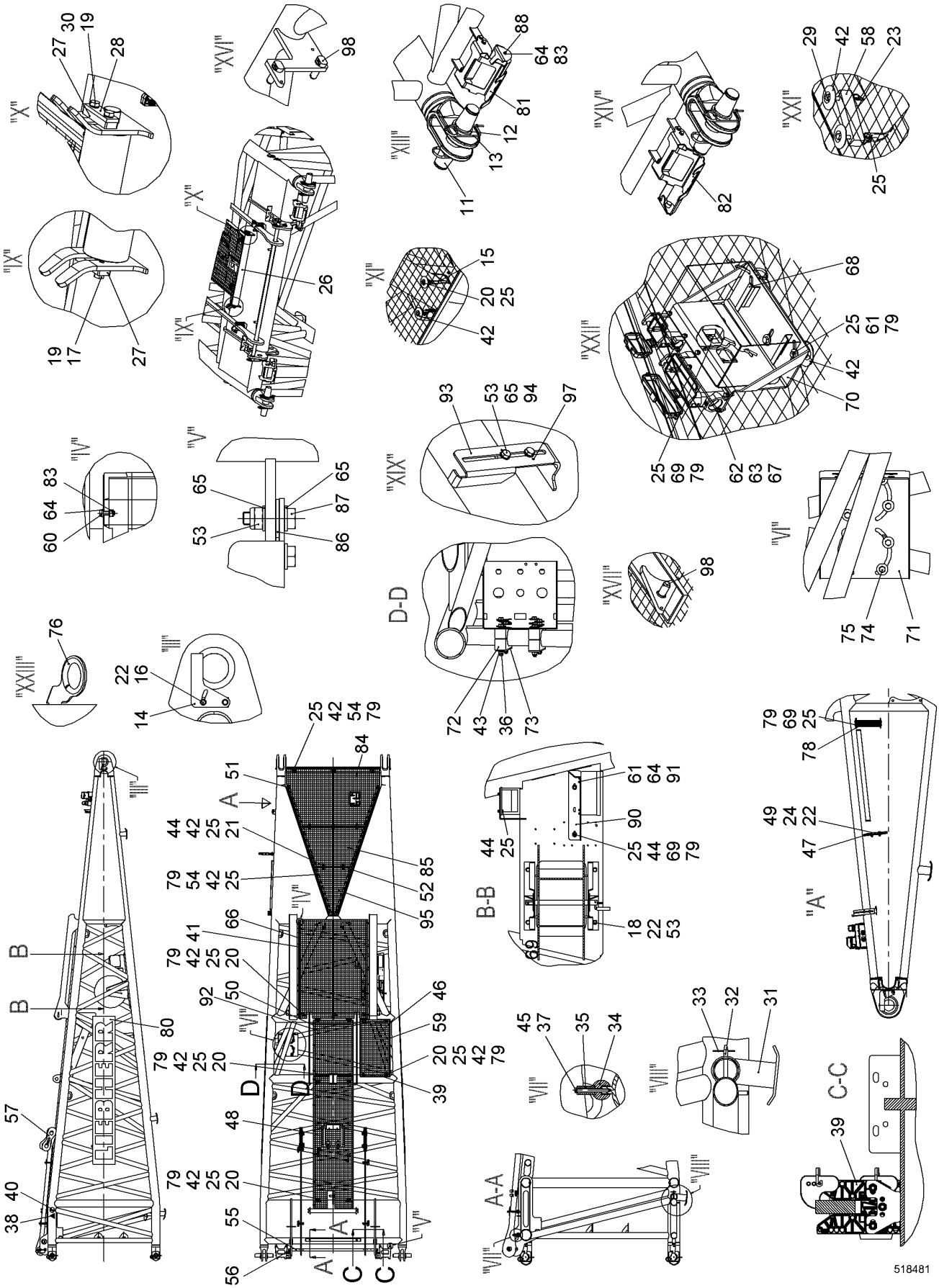

24.5.2017 518481	**138376_ETK_001**	❑ 509 (2/4)
LIEBHERR	**PIVOT PIECE CPL** **ANLENKSTUECK KPL**	**11 23 820 3**

Pos.	Item	Quantity	Description	Bezeichnung	Serie	K
11	950581614	4	PIN 80X371 LHRD900-40;10019758	BOLZEN		
12	421103814	8	WASHER DIN EN 28738 80 ST;	SCHEIBE		
13	433105008	8	RETAINING SPRING DIN 2194 6MM FS	SICHERUNGSFEDER		
14	970831503	2	WP	WP		
15	10531873	2	TIGHTENING STRAP HINGE PIN	GELENKBOLZENSPANNBAND		
16	406517314	4	HEX SCREW ISO 4017 M12X30 A4-70	SECHSKANTSCHRAUBE		
17	406518714	2	HEX SCREW ISO 4017 M10X20 A4-70	SECHSKANTSCHRAUBE		
18	406518414	4	HEX SCREW ISO 4017 M12X35 A4-70	SECHSKANTSCHRAUBE		
19	10536579	4	WEDGE LOCK WASHER M10 254 SMO;EN 10	KEILSICHERUNGSSCHEIBE		
20	10331506	19	HEX SCREW ISO 4017 M8X55 A4-70	SECHSKANTSCHRAUBE		
21	406501314	10	HEX SCREW ISO 4017 M8X30 A4-70	SECHSKANTSCHRAUBE		
22	4901782	16	WASHER ISO 7089 12 A4	SCHEIBE		
23	10530689	2	TIGHTENING STRAP HINGE PIN	GELENKBOLZENSPANNBAND		
24	10540495	2	HEX NUT ISO 10511 M12 A4	SECHSKANTMUTTER		
25	10540493	64	HEX NUT ISO 10511 M8 A4	SECHSKANTMUTTER		
26	939662601	1	SAFETY ROLLER	SCHUTZWALZE		
27	956378214	2	AXLE HOLDER	ACHSHALTER		
28	703003014	1	AXLE HOLDER	ACHSHALTER		
29	10538812	4	HEX SCREW ISO 4017 M8X100 A4-70	SECHSKANTSCHRAUBE		
30	406511914	2	HEX SCREW ISO 4017 M10X25 A4-70	SECHSKANTSCHRAUBE		
31	990954814	2	FOOT ST.CONST.	FUSS SCHWK		
33	433206214	2	SPRING PLUG DIN 11024 4	FEDERSTECKER		
34	971303203	1	STRIP	LEISTE		
35	956009714	2	INTERMEDIATE PART	ZWISCHENSTUECK		
36	10544155	8	HEX NUT DIN 985 M16 10	SECHSKANTMUTTER		
37	10538810	2	HEX SCREW ISO 4017 M8X90 A4-70	SECHSKANTSCHRAUBE		
38	10523125	2	SIGN	SCHILD		
39	773193414	1	SIGN	SCHILD		
40	773194314	2	SIGN	SCHILD		
41	11275747	1	GRATING	GITTERROST		
42	10098157	53	DISH	TELLER		
43	10544172	8	WASHER ISO 7089 16	SCHEIBE		
44	420001014	18	WASHER ISO 7089 8 A4	SCHEIBE		
45	10558857	2	LOCKING RING 8 A2	SICHERUNGSRING		
46	10222994	1	GRATING	GITTERROST		
47	10445043	1	BULKHEAD PLATE	SCHOTTPLATTE		
48	10581937	1	GRATING CPL ⇨ ❑ 521	GITTERROST KPL		
49	406511414	2	HEX SCREW ISO 4017 M12X40 A4-70	SECHSKANTSCHRAUBE		
50	10582020	2	U-STEEL	U-STAHL		
51	10581992	2	L-PROFILE	L-PROFIL		
53	10540494	22	HEX NUT ISO 10511 M10 A4	SECHSKANTMUTTER		
54	10538807	17	HEX SCREW ISO 4017 M8X50 A4-70	SECHSKANTSCHRAUBE		
55	289057714	1	TUBE	ROHR		
56	433102508	2	RETAINING SPRING 5MM	SICHERUNGSFEDER		
57	993006014	1	ANCHORING ROD CPL ⇨ ❑ 522	HALTESTANGE KPL		
58	10589204	2	SHEET	PLATTE		
59	10222995	2	U-STEEL	U-STAHL		
60	406532614	24	HEX SCREW ISO 4017 M6X20 A4-70	SECHSKANTSCHRAUBE		
61	406508014	3	HEX SCREW ISO 4017 M8X45 A4-70	SECHSKANTSCHRAUBE		
62	406501814	8	HEX SCREW ISO 4017 M5X20 A4-70	SECHSKANTSCHRAUBE		
63	420005214	16	WASHER ISO 7089 5 A4	SCHEIBE		
64	420000414	56	WASHER ISO 7089 6 A4	SCHEIBE		
65	420001114	36	WASHER ISO 7089 10 A4	SCHEIBE		
67	10540484	8	HEX NUT ISO 10511 M5 A4	SECHSKANTMUTTER		
68	10540082	2	RUBBER	GUMMI		
69	406501414	11	HEX SCREW ISO 4017 M8X25 A4-70	SECHSKANTSCHRAUBE		
70	11218236	1	HOLDER	HALTER		
72	602017114	4	CLAMP-HALF	KLEMMHAELFTE		

Pos.	Item	Quantity	Description	Bezeichnung	Serie	K
73	602016514	4	LID PLATE	DECKPLATTE		
74	10544173	8	WASHER ISO 7093-1 16	SCHEIBE		
75	10543975	8	HEX SCREW ISO 4014 M16X160 10.9	SECHSKANTSCHRAUBE		
76	226017802	4	EDGE PROTECTION METER WARE	KANTENSCHUTZ METERWARE		
77	10582001	1	U-STEEL	U-STAHL		
78	916183314	1	HOSE HOLDER HYDR.ST.CONST. CPL	SCHLAUCHHALTER SCHWK HYD		
79	10540510	49	WASHER ISO 7093-1 8 A4	SCHEIBE		
80	993419814	2	LIEBHERR SIGN ⇨ ❑ 523	SCHILD LIEBHERR		
81	10349598	2	SUPPORT SHEET	AUFLAGEBLECH		
82	10349599	2	SUPPORT SHEET	AUFLAGEBLECH		
83	10540492	32	HEX NUT ISO 10511 M6 A4	SECHSKANTMUTTER		
84	10581980	1	GRATING	GITTERROST		
85	10581981	1	GRATING	GITTERROST		
86	10540511	16	WASHER ISO 7093-1 10 A4	SCHEIBE		
87	406509314	16	HEX SCREW ISO 4017 M10X35 A4-70	SECHSKANTSCHRAUBE		
88	726612214	4	RUBBER MOUNT	LAGER GUMMI		
90	959332514	1	WP	WP		
91	404251014	4	SOCKET HEAD SCREW ISO 4762 M6X35 A4-7	ZYLINDERSCHRAUBE		
92	11239010	1	GRATING	GITTERROST		
93	971363403	1	PLATE	BLECH		
94	406511614	2	HEX SCREW ISO 4017 M10X30 A4-70	SECHSKANTSCHRAUBE		
95	10581982	1	GRATING	GITTERROST		
97	432003714	2	DOWEL PIN ISO 8752 5X16	SPANNSTIFT		
98	11946386	3	PIN	BOLZEN		
110	11266945	1	SIGN LOCATIONS ⇨ ❑ 524	SCHILDER ANORD		

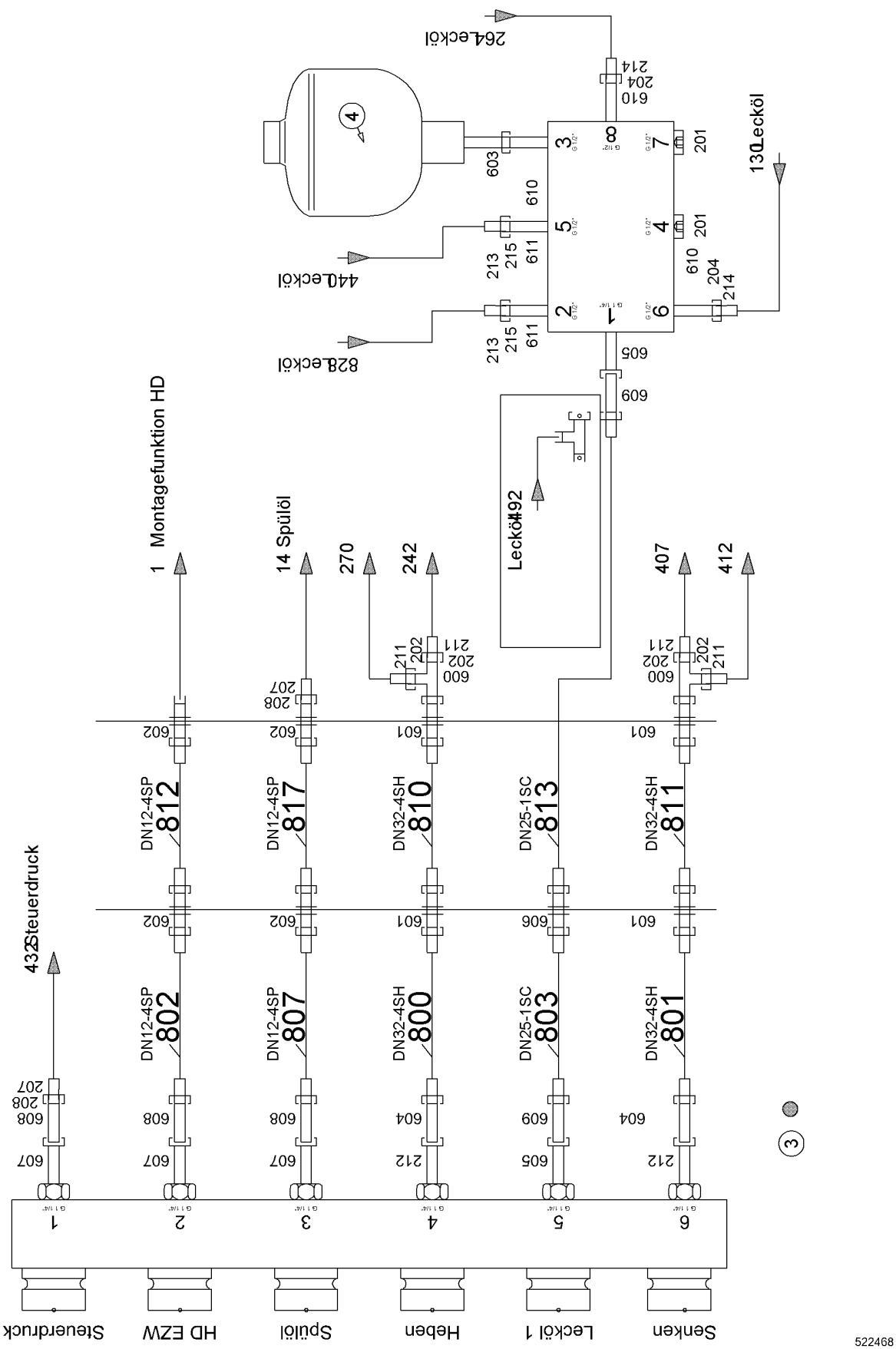

24.5.2017 522468 LIEBHERR	**138376_ETK_001** **PIVOT PIECE HYDR** **ANLENKSTUECK HYDR**	❑ 512 (1/2) **10 51 826 1**

Pos.	Item	Quantity	Description	Bezeichnung	Serie	K
2	10551576	1	QUICK RELEASE FITTING ⇨ ❑ 514	SCHNELLVERSCHLUSSKUPPLUN		
3	10445126	1	ENCLOSURE CPL	GEHAEUSE KPL		
4	592274714	1	DIAPHRAGM ACCUMULATOR	MEMBRANSPEICHER		
5	943958914	1	BLOCK	BLOCK		
201	247112702	2	FITTING	VERSCHRAUBUNG		
202	477401014	4	FITTING	VERSCHRAUBUNG		
204	247049102	2	FITTING	VERSCHRAUBUNG		
207	477701114	2	FITTING	VERSCHRAUBUNG		
208	477400614	2	FITTING	VERSCHRAUBUNG		
211	477701814	4	FITTING	VERSCHRAUBUNG		
212	475503314	2	FITTING	VERSCHRAUBUNG		
213	477700514	2	FITTING	VERSCHRAUBUNG		
214	477700114	2	FITTING	VERSCHRAUBUNG		
215	247048802	2	FITTING	VERSCHRAUBUNG		
600	482331914	2	FITTING	VERSCHRAUBUNG		
601	474033014	4	FITTING	VERSCHRAUBUNG		
602	474032614	4	FITTING	VERSCHRAUBUNG		
603	247011602	1	FITTING	VERSCHRAUBUNG		
604	471034414	2	FITTING	VERSCHRAUBUNG		
605	247042702	2	FITTING	VERSCHRAUBUNG		
606	247027402	1	FITTING	VERSCHRAUBUNG		
607	247116402	3	FITTING	VERSCHRAUBUNG		
608	471033214	3	FITTING	VERSCHRAUBUNG		
609	247010102	2	FITTING	VERSCHRAUBUNG		
610	247009702	3	FITTING	VERSCHRAUBUNG		
611	247009202	2	FITTING	VERSCHRAUBUNG		

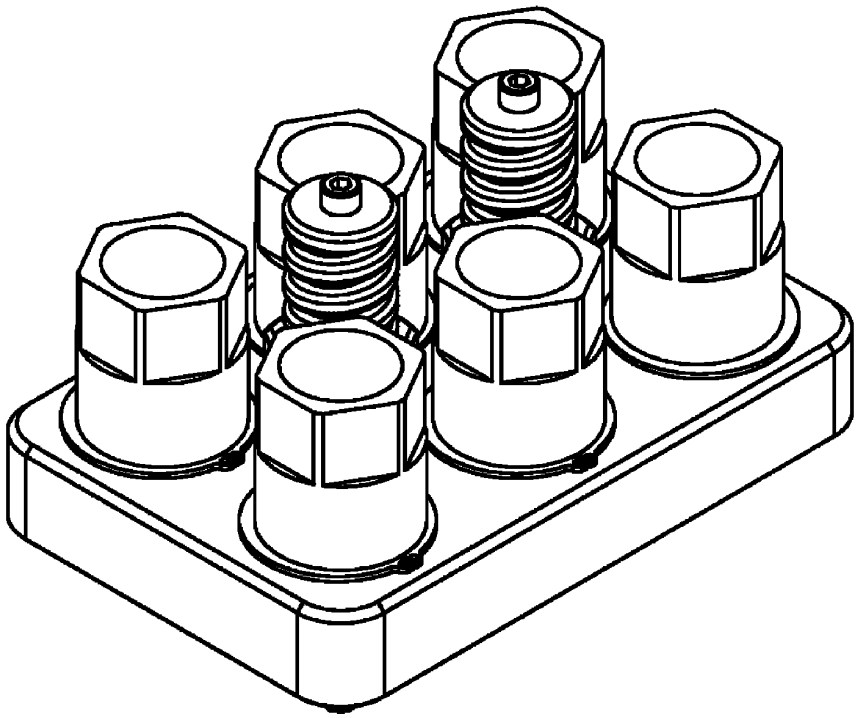

514780

Pos.	Item	Quantity	Description	Bezeichnung	Serie	K
1	10572236	2	GUIDING BOLT	FUEHRUNGSBOLZEN		
2	10447747	6	PLUG	STECKER		
3	10572242	1	COVER	DECKEL		

OHNE BILD
WITHOUT ILLUSTRATION
SANS PLANCHE
SIN FIG.
SEM ILUSTRAÇÃO
БЕЗ ИЗОБРАЖЕНИЯ

600000

Pos.	Item	Quantity	Description	Bezeichnung	Serie	K
10	11286324	1	ANGLE TRANSMITTER	WINKELGEBER		
21	11901511	1	CABLE LOOM 1 PIVOT PIECE EL ⇨ ❑ 516	KABELSATZ 1 ANLENKSTUECK E		
31	919252814	1	CABLE DRUM ⇨ ❑ 518	KABELTROMMEL		

OHNE BILD
WITHOUT ILLUSTRATION
SANS PLANCHE
SIN FIG.
SEM ILUSTRAÇÃO
БЕЗ ИЗОБРАЖЕНИЯ

600000

Pos.	Item	Quantity	Description	Bezeichnung	Serie	K
20	10572531	1	CLAMPING SOCKET	KLEMMDOSE		
21	10045155	2	CABLE GLAND	KABELVERSCHRAUBUNG		
22	10045157	1	CABLE GLAND	KABELVERSCHRAUBUNG		
23	602440301	1	CABLE GLAND	KABELVERSCHRAUBUNG		
24	693061414	8	STOPPER PLUG	BLINDSTOPFEN		
25	693061314	1	STOPPER PLUG	BLINDSTOPFEN		
26	693061214	15	STOPPER PLUG	BLINDSTOPFEN		
27	606774714	1	SIGN	SCHILD		
31	600385314	10.5	CONTROL LEAD	STEUERLEITUNG		
32	693155014	1	SOCKET SHELL	TUELLENGEHAEUSE		
33	605604714	1	MALE INSERT	STIFTEINSATZ		
34	605619814	14	PIN CONTACT	STIFTKONTAKT		
35	605601701	5	CONTACT PIN	KONTAKTSTIFT		
36	605615814	5	PIN CONTACT	STIFTKONTAKT		
37	10045157	1	CABLE GLAND	KABELVERSCHRAUBUNG		
41	260318602	10.5	LEAD	LEITUNG		
42	10036809	1	SOCKET SHELL	TUELLENGEHAEUSE		
43	605611814	1	MALE INSERT	STIFTEINSATZ		
44	605608401	24	CRIMPING CONTACT	CRIMPKONTAKT		
45	602440301	1	CABLE GLAND	KABELVERSCHRAUBUNG		
46	260493702	1	REDUCER	REDUZIERUNG		
51	693106214	1.5	CONTROL LEAD	STEUERLEITUNG		
52	605013408	1	PLUG	STECKER		
53	605013508	1	DUST CAP	STAUBKAPPE		
61	693157114	1	BS HOUSING	SOCKELGEHAEUSE		
62	605609514	1	FEMALE INSERT	BUCHSENEINSATZ		

OHNE BILD
WITHOUT ILLUSTRATION
SANS PLANCHE
SIN FIG.
SEM ILUSTRAÇÃO
БЕЗ ИЗОБРАЖЕНИЯ

600000

Pos.	Item	Quantity	Description	Bezeichnung	Serie	K
63	693061514	2	STOPPER PLUG	BLINDSTOPFEN		
71	693157214	1	BS HOUSING	SOCKELGEHAEUSE		
72	605612014	1	FEMALE INSERT	BUCHSENEINSATZ		
73	693061314	2	STOPPER PLUG	BLINDSTOPFEN		
91	10226573	1	WIRING HARNESS	KABELSTRANG		
92	10296818	1	DEVICE PLUG	GERAETESTECKER		
93	10530322	1	COUNTER NUT M20X1.5 POLYAMID	GEGENMUTTER		

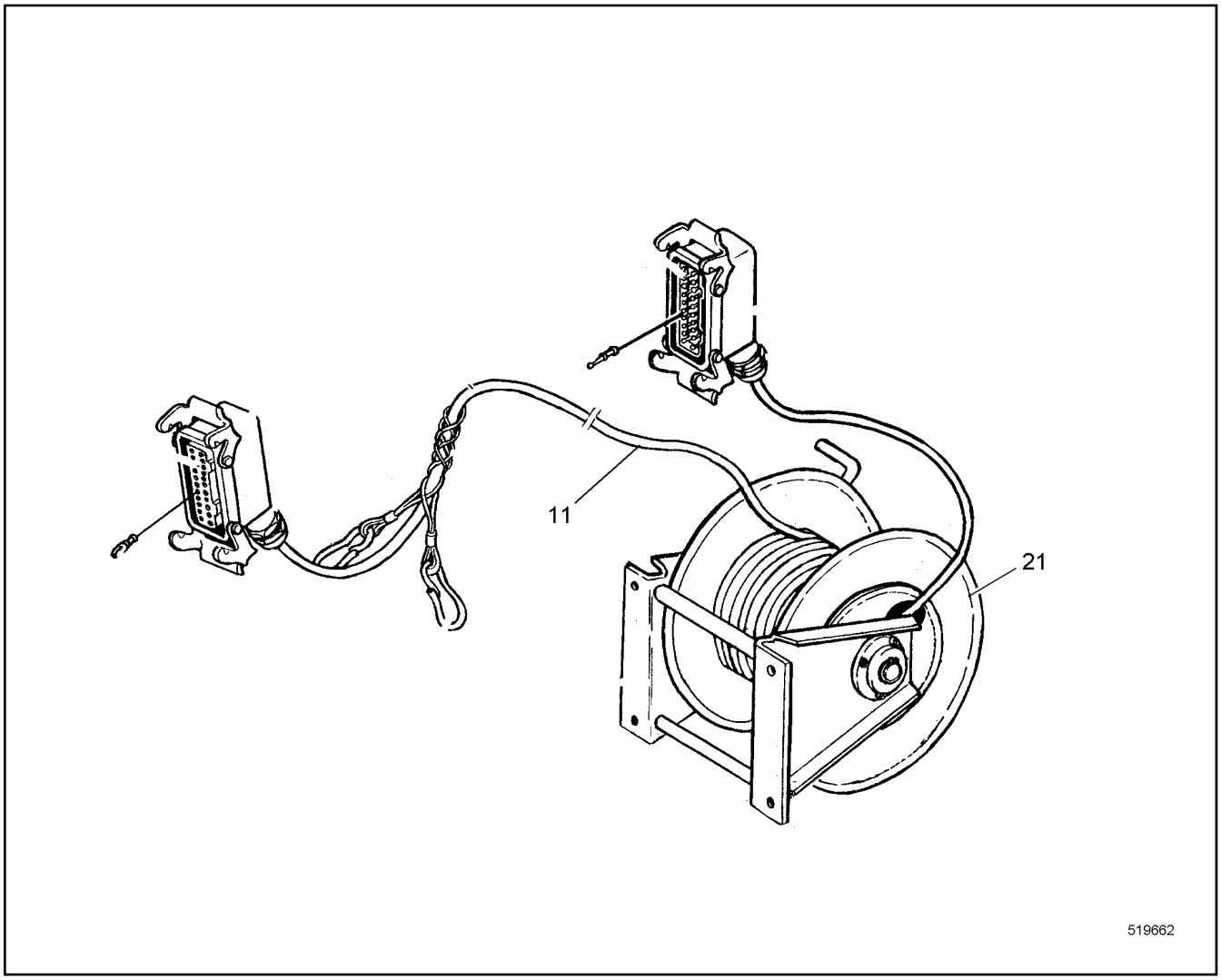

Pos.	Item	Quantity	Description	Bezeichnung	Serie	K
11	11265111	1	WIRING HARNESS	KABELSTRANG		
21	616154114	1	CABLE DRUM ⇨ ❑ 519	KABELTROMMEL		
22	226016702	0.45	EDGE PROTECTION METER WARE	KANTENSCHUTZ METERWARE		

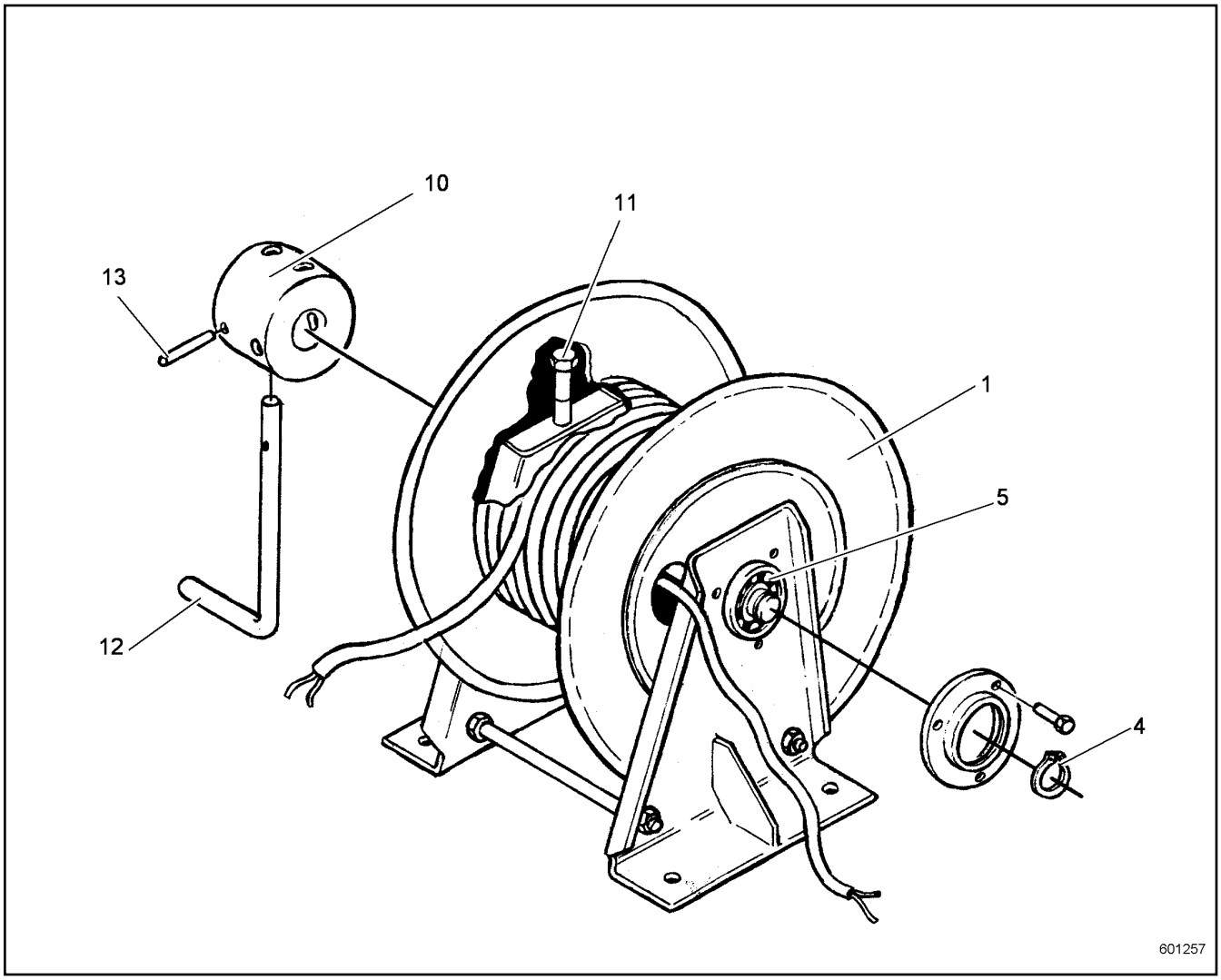

Pos.	Item	Quantity	Description	Bezeichnung	Serie	K
1	10227104	1	DRUM BODY	TROMMELKOERPER		
3	4280020	3	LOCKING RING DIN 471 25X1.2	SICHERUNGSRING		
4	616155214	2	DEEP GROOVE BALL BEARING	RILLENKUGELLAGER		
7	10227128	1	LOCKING DEVICE	ARRETIERUNG		
8	10227126	1	BUSHING	BUCHSE		
9	10227129	1	PIN M12X1.5 NIROSTA	BOLZEN		
10	616155414	1	CRANK HANDLE	HANDKURBEL		
11	616155514	1	TENSION PIN	SCHWERSPANNSTIFT		

ACHTUNG !
ATTENTION !
ATTENTION !
ATENCIÓN !
ATENÇÃO !
ВНИМАНИЕ

Für Schlauchbestellungen kann über die Schlauchnummer, in der entsprechenden Schlauchliste, die Identnummer festgestellt werden.

For ordering flexible hoses you can find the identification number through the hose-number in the corresponding hose-list.

Pour des ordres de tuyau flexible le nombre d'identification on voit dans la liste de tuyau flexible correspondente.

Para el pedido de manguera, indicar el número de identificación de la manguera de la lista respectiva.

Para se encomendar uma mangueira, consulte o número de identificaçao na respectiva lista de mangueiras.

Для оформления заказов на шланги/рукавы идент. № может быть определен при помощи номера шланга/рукава, указанного в соотетствующем перечне шлангов/рукавов.

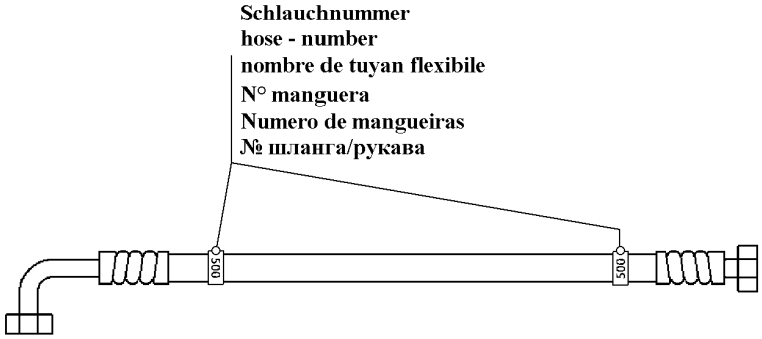

500000

Pos.	Item	Quantity	Description	Bezeichnung	Serie	K
800	993226114	1	HOSE CPL	SCHLAUCH KPL		
801	993226114	1	HOSE CPL	SCHLAUCH KPL		
802	928318214	1	HOSE CPL	SCHLAUCH KPL		
803	992893114	1	HOSE CPL	SCHLAUCH KPL		
807	928318214	1	HOSE CPL	SCHLAUCH KPL		
810	991198814	1	HOSE CPL	SCHLAUCH KPL		
811	991198814	1	HOSE CPL	SCHLAUCH KPL		
812	991563114	1	HOSE CPL	SCHLAUCH KPL		
813	992504214	1	HOSE CPL	SCHLAUCH KPL		
817	991563114	1	HOSE CPL	SCHLAUCH KPL		

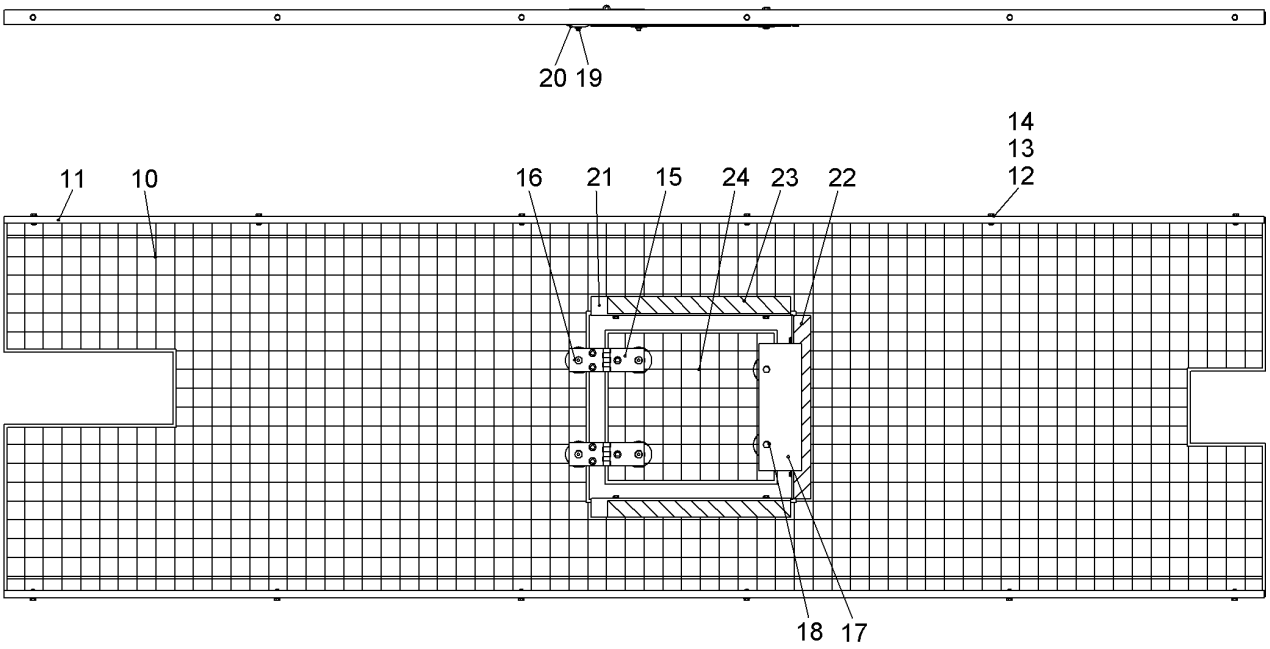

Pos.	Item	Quantity	Description	Bezeichnung	Serie	K
10	10598959	1	GRATING	GITTERROST		
11	10565639	2	U-STEEL	U-STAHL		
12	420000414	36	WASHER ISO 7089 6 A4	SCHEIBE		
13	406532614	18	HEX SCREW ISO 4017 M6X20 A4-70	SECHSKANTSCHRAUBE		
14	10540492	18	HEX NUT ISO 10511 M6 A4	SECHSKANTMUTTER		
15	954560603	2	HINGE	SCHARNIER		
16	408601008	4	COUNTERSUNK SCREW DIN 7991 M8X45 8.8;	SENKSCHRAUBE		
17	958908914	1	LIMIT STOP PLATE	ANSCHLAGPLATTE		
18	406532914	2	HEX SCREW ISO 4017 M8X40 A4-70	SECHSKANTSCHRAUBE		
19	10540493	6	HEX NUT ISO 10511 M8 A4	SECHSKANTMUTTER		
20	10098157	6	DISH	TELLER		
21	10581999	2	U-STEEL	U-STAHL		
22	10582001	1	U-STEEL	U-STAHL		
23	773193414	1	SIGN	SCHILD		
24	10599053	1	GRATING	GITTERROST		

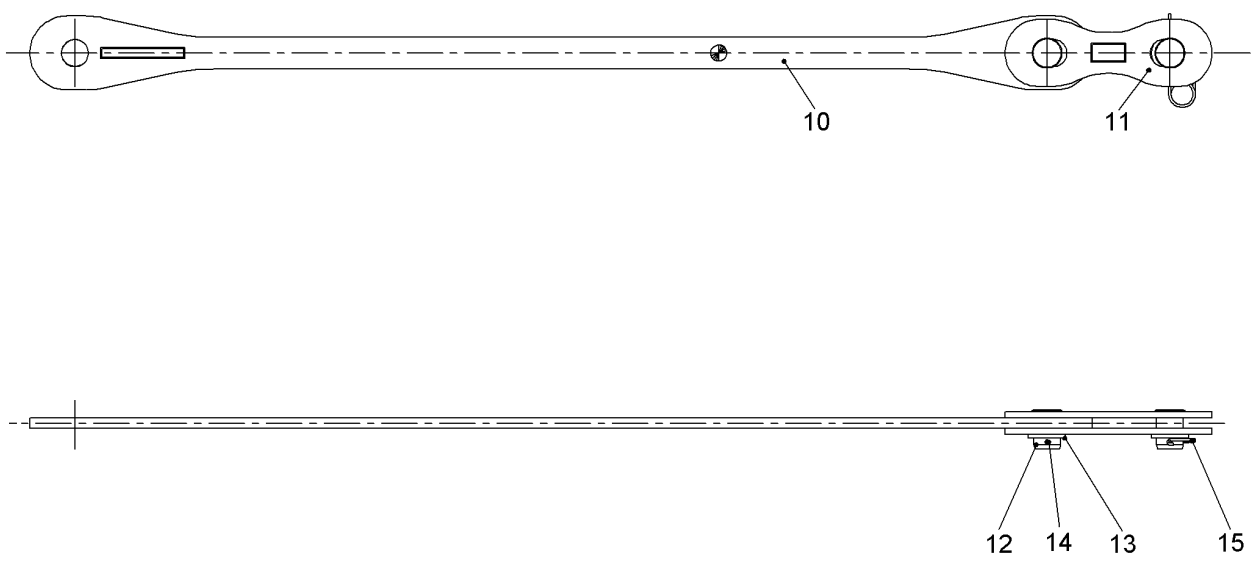

510054

Pos.	Item	Quantity	Description	Bezeichnung	Serie	K
10	10336970	2	ANCHORING ROD	HALTESTANGE		
11	10226402	4	COUPLING LINK	KOPPELLASCHE		
12	959575714	4	PIN 73X95 LHRD900-40;10019758	BOLZEN		
13	421103614	4	WASHER DIN EN 28738 65 ST;	SCHEIBE		
14	433009514	2	SPLIT PIN ISO 1234 8X100 A4	SPLINT		
15	433105008	2	RETAINING SPRING DIN 2194 6MM FS	SICHERUNGSFEDER		

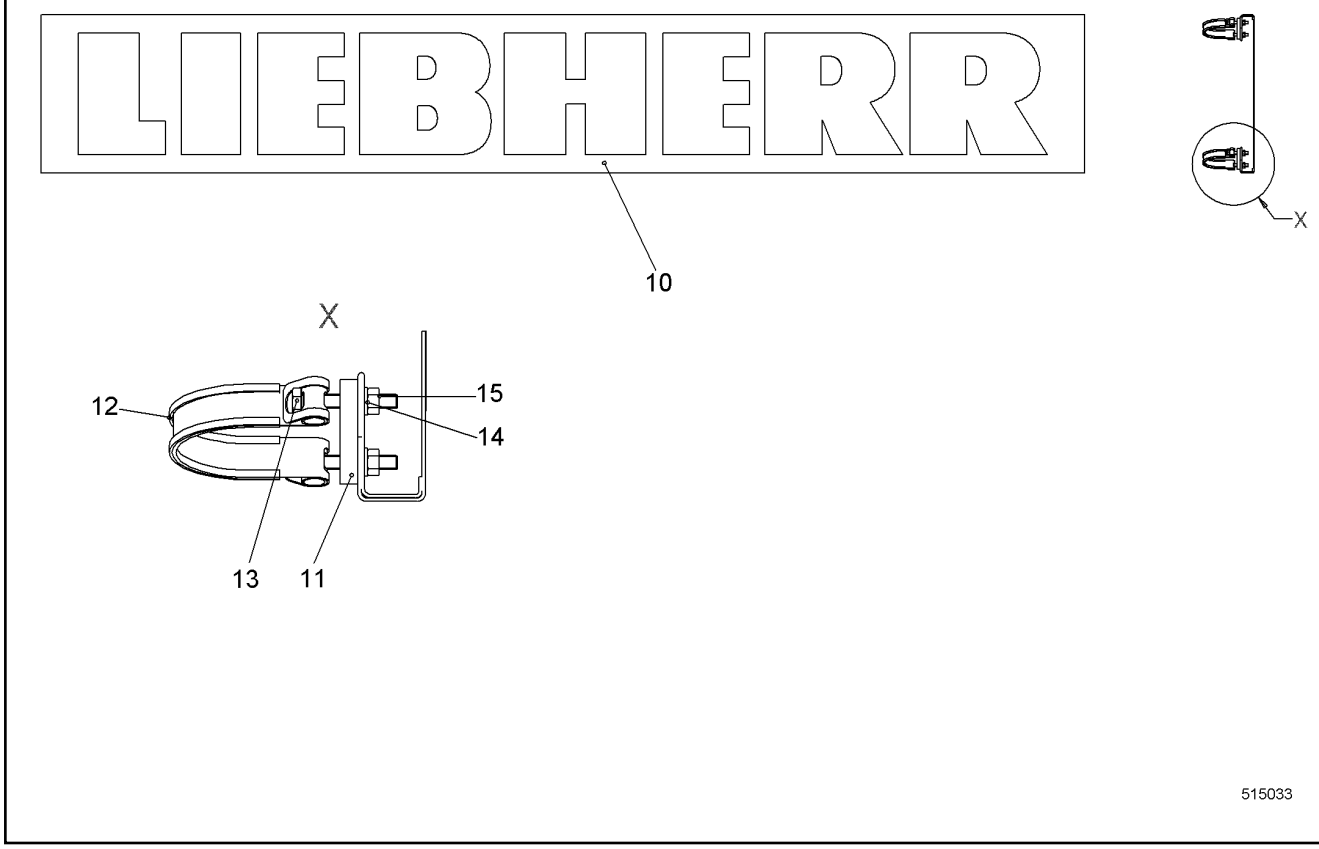

Pos.	Item	Quantity	Description	Bezeichnung	Serie	K
11	10350084	4	REINFORCING PLATE	VERSTAERKUNGSPLATTE		
12	10530689	4	TIGHTENING STRAP HINGE PIN	GELENKBOLZENSPANNBAND		
13	10331506	8	HEX SCREW ISO 4017 M8X55 A4-70	SECHSKANTSCHRAUBE		
14	420001014	8	WASHER ISO 7089 8 A4	SCHEIBE		
15	10540493	8	HEX NUT ISO 10511 M8 A4	SECHSKANTMUTTER		

OHNE BILD
WITHOUT ILLUSTRATION
SANS PLANCHE
SIN FIG.
SEM ILUSTRAÇÃO
БЕЗ ИЗОБРАЖЕНИЯ

600000

Pos.	Item	Quantity	Description	Bezeichnung	Serie	K
10	9402377	4	INFORMATION SIGN	HINWEISSCHILD		
11	11265497	4	SIGN	SCHILD		
12	11265425	2	SIGN	SCHILD		

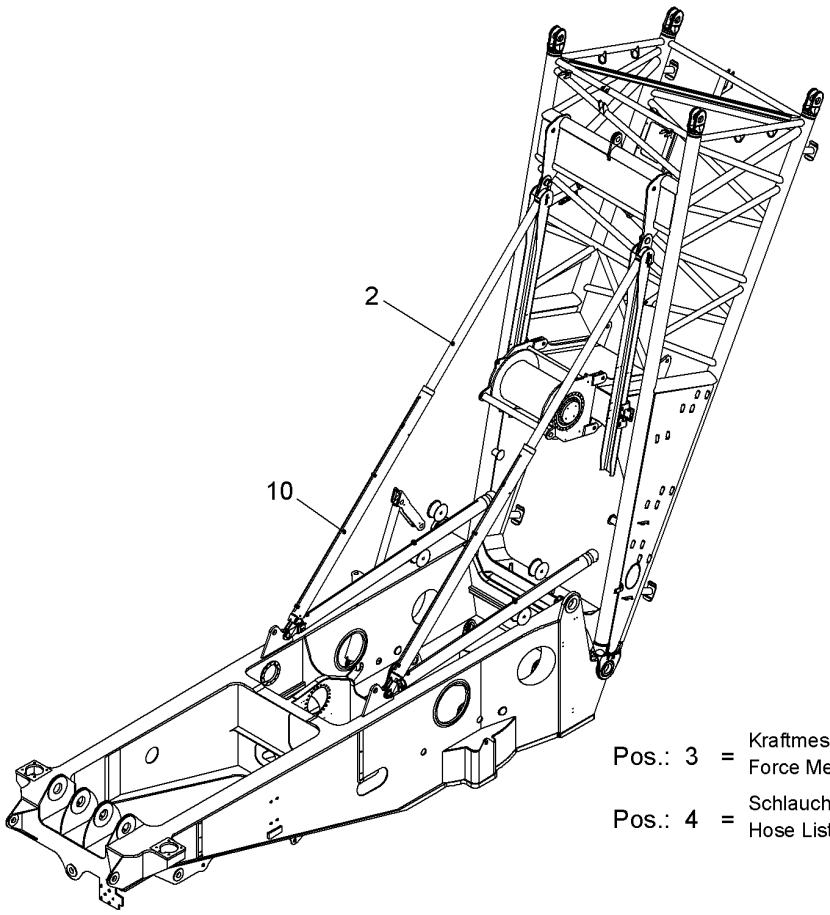

Pos.	Item	Quantity	Description	Bezeichnung	Serie	K
2	10585108	1	TILTING-BACK SUPPORTS HYDR RFK ⇨ ❑ 526	RUECKFALLSTUETZEN HYDR NR		
3	11292596	1	FORCE MEASURING AXLE EL ⇨ ❑ 533	KRAFTMESSACHSE EL		
4	11229706	1	HOSE LIST ⇨ ❑ 534	SCHLAUCHLISTE		
10	11275365	1	TILT-BACK SUPPORTS INSTAL. ⇨ ❑ 535	RUECKFALLSTUETZEN EINBAU		

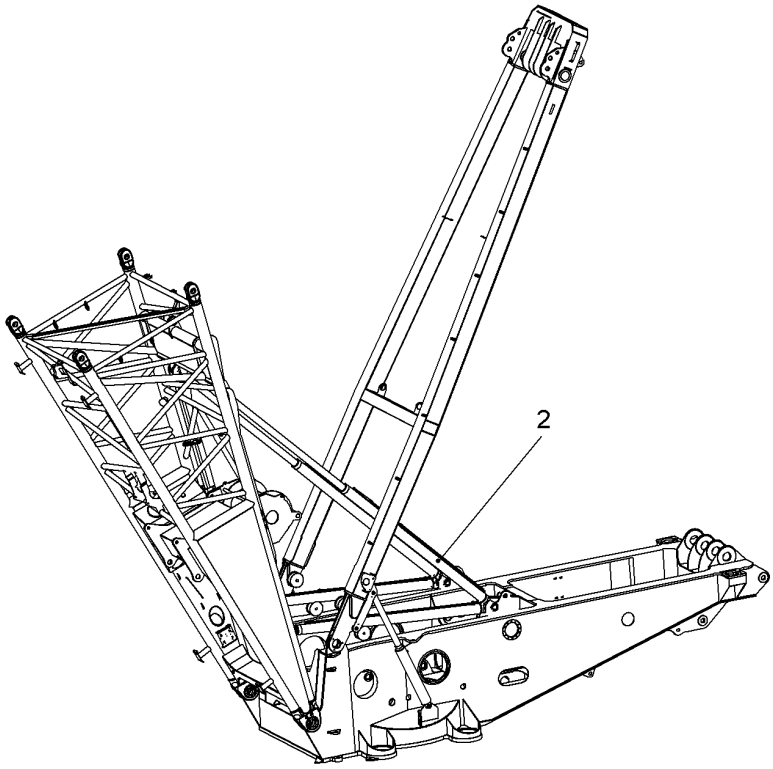

Pos.	Item	Quantity	Description	Bezeichnung	Serie	K
2	10519591	1	TUBING HYDR ⇨ ❑ 527	VERROHRUNG HYDR		

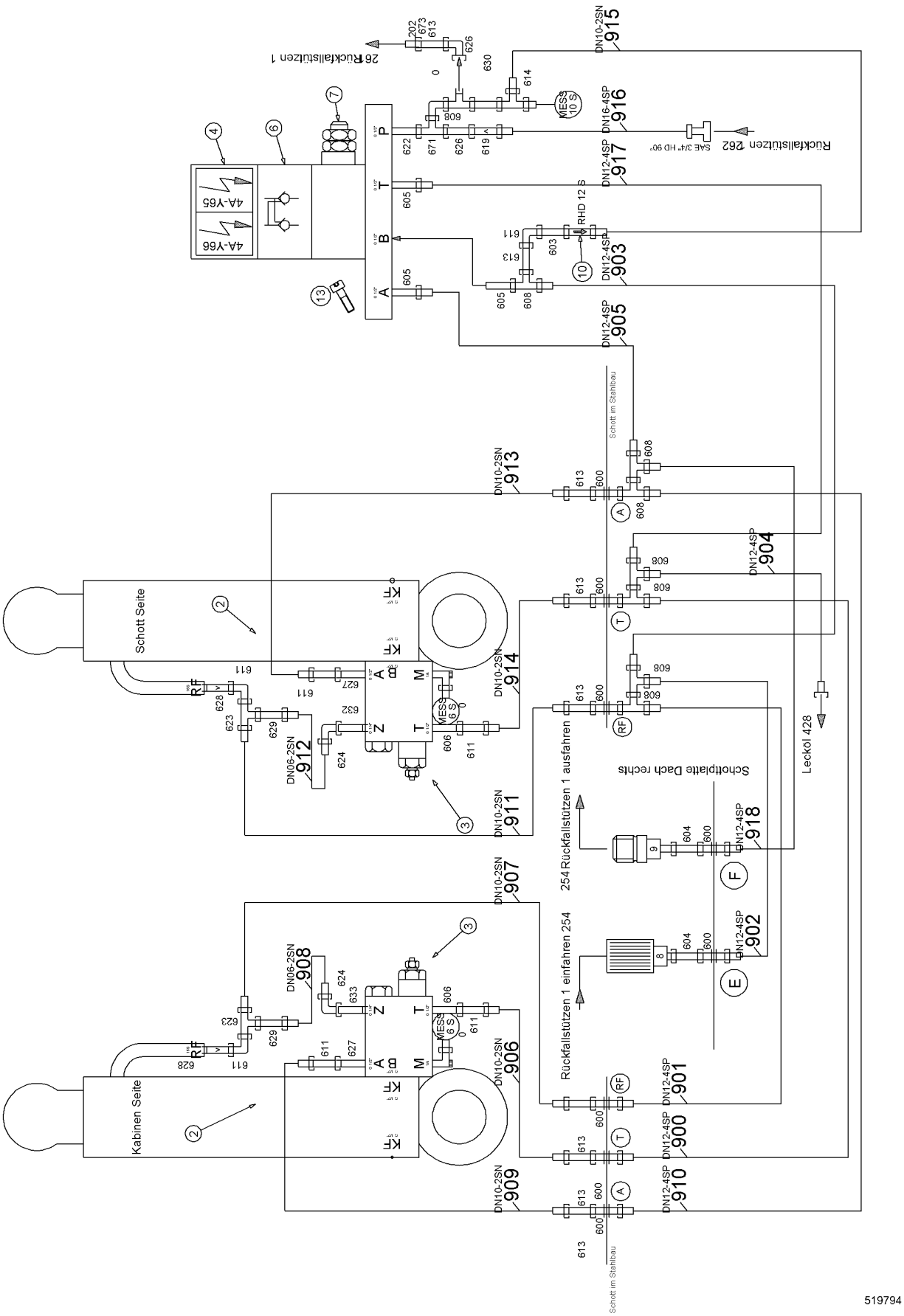
Schott Seite
Kabinen Seite
Schott im Stahlbau
Schott im Stahlbau
Schottplatte Dach rechts
Leckol 428
Rückfallstützen 1 einfahren 254
254 Rückfallstützen 1 ausfahren
26 Rückfallstützen 1
Rückfallstützen 262
SAE 3/4" HD 90°
4A-Y65
4A-Y66
RHD 12 S
MESS 10 S
MESS 6 S
DN10-2SN 915
DN16-4SP 916
DN12-4SP 917
DN12-4SP 903
DN12-4SP 905
DN10-2SN 913
DN12-4SP 904
DN10-2SN 914
DN06-2SN 912
DN10-2SN 911
DN12-4SP 918
DN10-2SN 907
DN12-4SP 902
DN06-2SN 908
DN10-2SN 906
DN12-4SP 901
DN12-4SP 900
DN10-2SN 909
DN12-4SP 910
519794

Pos.	Item	Quantity	Description	Bezeichnung	Serie	K
2	10099173	2	DOUBLE-ACTING CYL ⇨ ❑ 529	DOPPELWIRKZYL		
3	592022414	2	LOAD HOLDING VALVE ⇨ ❑ 530	LASTHALTEVENTIL		
4	510429214	1	DIRECTIONAL CONTROL VALVE ⇨ ❑ 531	WEGEVENTIL		
5	510427914	1	CONNECTING PLATE	ANSCHLUSSPLATTE		
6	511607014	1	DOUBLE NON-RETURN VALVE	DOPPELRUECKSCHLAGVENTIL		
7	511475514	1	PRESSURE LIMITING VALVE ⇨ ❑ 532	DRUCKBEGRENZUNGSVENTIL		
8	510572214	1	QUICK-FITTING THREAD COUPLING	SCHNELLVERSCHRAUBUNGSK		
9	510571914	1	QUICK-FITTING THREAD COUPLING ⇨ ❑ 41	SCHNELLVERSCHRAUBUNGSK		
10	510411614	1	NON-RETURN VALVE	RUECKSCHLAGVENTIL		
13	404203514	4	SOCKET HEAD SCREW ISO 4762 M6X140 10.9	ZYLINDERSCHRAUBE		
201	510694514	1	GAUGE CONNECTION	MESSSTUTZEN		
202	477700514	1	FITTING	VERSCHRAUBUNG		
600	474032614	8	FITTING	VERSCHRAUBUNG		
603	471100714	1	FITTING	VERSCHRAUBUNG		
604	471100114	2	FITTING	VERSCHRAUBUNG		
605	471033214	3	FITTING	VERSCHRAUBUNG		
606	471032608	2	FITTING	VERSCHRAUBUNG		
608	7407098	8	FITTING	VERSCHRAUBUNG		
611	7617354	7	FITTING	VERSCHRAUBUNG		
613	485433314	8	FITTING	VERSCHRAUBUNG		
614	7367776	1	FITTING	VERSCHRAUBUNG		
619	475033614	1	FITTING	VERSCHRAUBUNG		
622	481930614	1	FITTING	VERSCHRAUBUNG		
623	7617461	2	FITTING	VERSCHRAUBUNG		
624	472531508	2	FITTING	VERSCHRAUBUNG		
626	7617460	2	FITTING	VERSCHRAUBUNG		
627	471032708	2	FITTING	VERSCHRAUBUNG		
628	475002514	2	FITTING	VERSCHRAUBUNG		
629	485433414	2	FITTING	VERSCHRAUBUNG		
630	485433514	1	FITTING	VERSCHRAUBUNG		
632	473210214	1	FITTING	VERSCHRAUBUNG		
633	473231214	1	FITTING	VERSCHRAUBUNG		
650	510587514	2	FLANGE HALF	FLANSCHHAELFTE		
660	10490784	1	RECTANGULAR SECTION RING	RECHTECKRING		
670	4001246	4	HEX SCREW ISO 4017 M10X35 10.9	SECHSKANTSCHRAUBE		
671	482431514	1	FITTING	VERSCHRAUBUNG		
673	477400414	1	FITTING	VERSCHRAUBUNG		

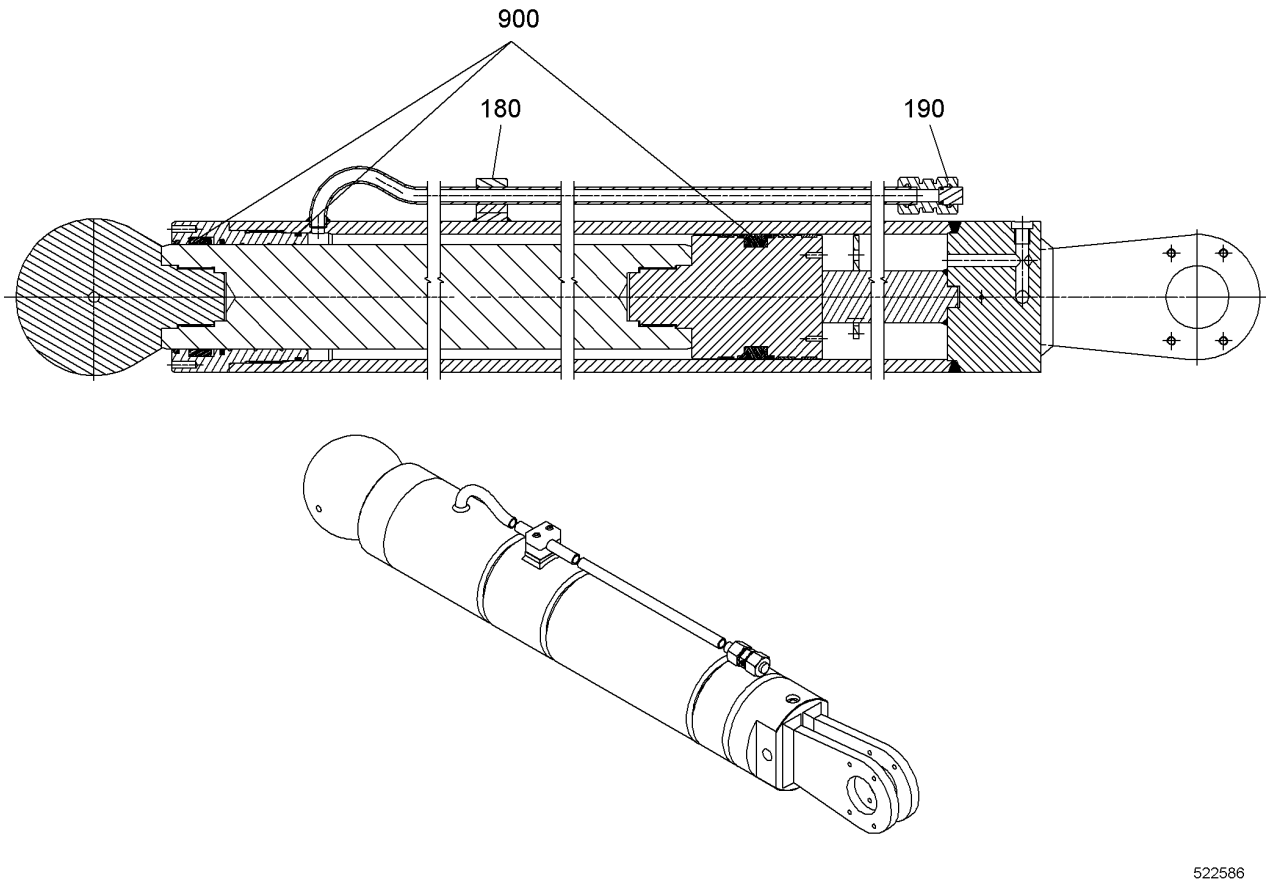

Pos.	Item	Quantity	Description	Bezeichnung	Serie	K
40	11310567	1	GUIDE BUSHING 145/100X130	FUEHRUNGSBUCHSE		
50	10505322	1	BALL JOINT	KUGELGELENK		
100	11910323	1	TUBE	ROHR		
110	11910327	1	O-RING	O-RING		
111	11910328	1	SUPPORTING RING	STUETZRING		
180	11910324	2	PIPE CLAMP	ROHRSCHELLE		
190	11910325	1	FITTING	VERSCHRAUBUNG		
220	10445040	1	VALVE	VENTIL		
900	10352446	1	SEALING SET CPL CYL	DS KPL ZYL		

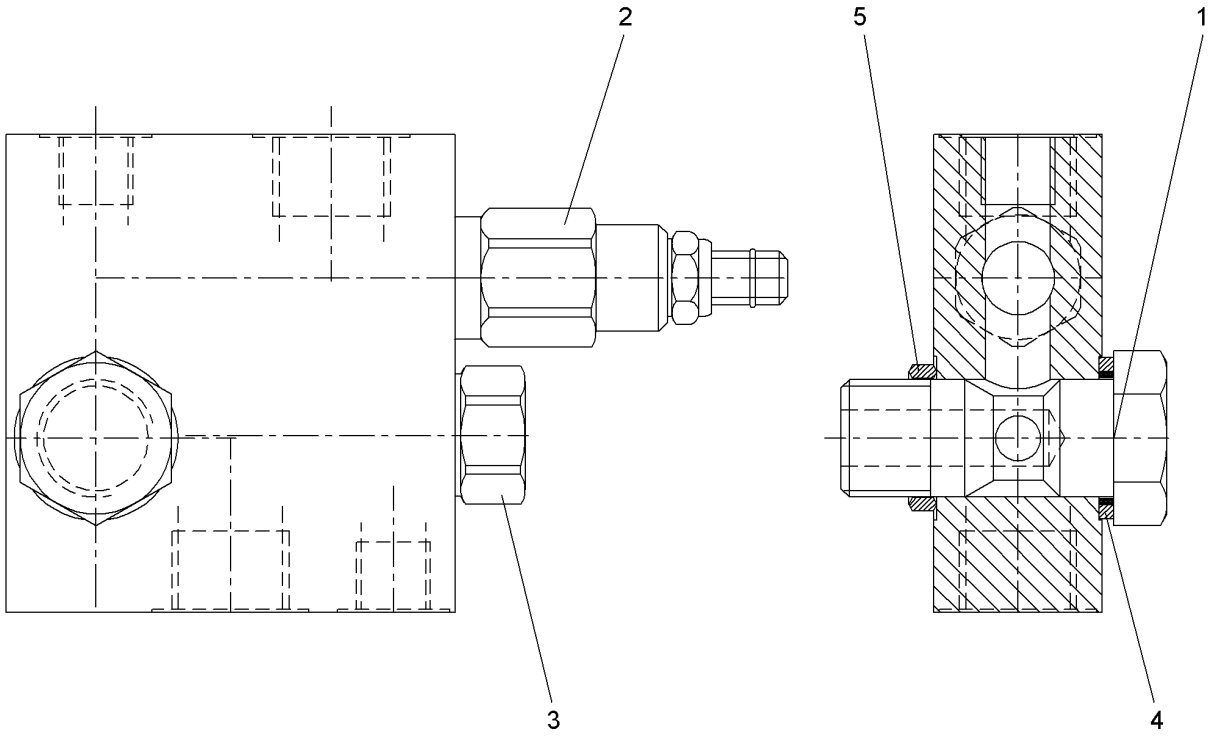

Pos.	Item	Quantity	Description	Bezeichnung	Serie	K
1	10588723	1	HOLLOW SCREW R1/2"	HOHLSCHRAUBE		
2	11233731	1	PRESSURE LIMITING VALVE	DRUCKBEGRENZUNGSVENTIL		
3	11270155	1	NON-RETURN VALVE	RUECKSCHLAGVENTIL		
4	10588725	1	FLAT SEALING RING	FLACHDICHTRING		
5	10588729	1	EDGE SEALING RING	DICHTKANTENRING		

OHNE BILD
WITHOUT ILLUSTRATION
SANS PLANCHE
SIN FIG.
SEM ILUSTRAÇÃO
БЕЗ ИЗОБРАЖЕНИЯ

600000

Pos.	Item	Quantity	Description	Bezeichnung	Serie	K
1	10215806	2	MAGNET COIL	MAGNETSPULE		
999	10215808	1	SEAL KIT	DICHTUNGSSATZ		

OHNE BILD
WITHOUT ILLUSTRATION
SANS PLANCHE
SIN FIG.
SEM ILUSTRAÇÃO
БЕЗ ИЗОБРАЖЕНИЯ

600000

Pos.	Item	Quantity	Description	Bezeichnung	Serie	K
20	511486714	1	PRESSURE LIMITING VALVE	DRUCKBEGRENZUNGSVENTIL		
30	511486614	1	O-RING PLATE	O-RING PLATTE		
70	704274808	5	O-RING	O-RING		

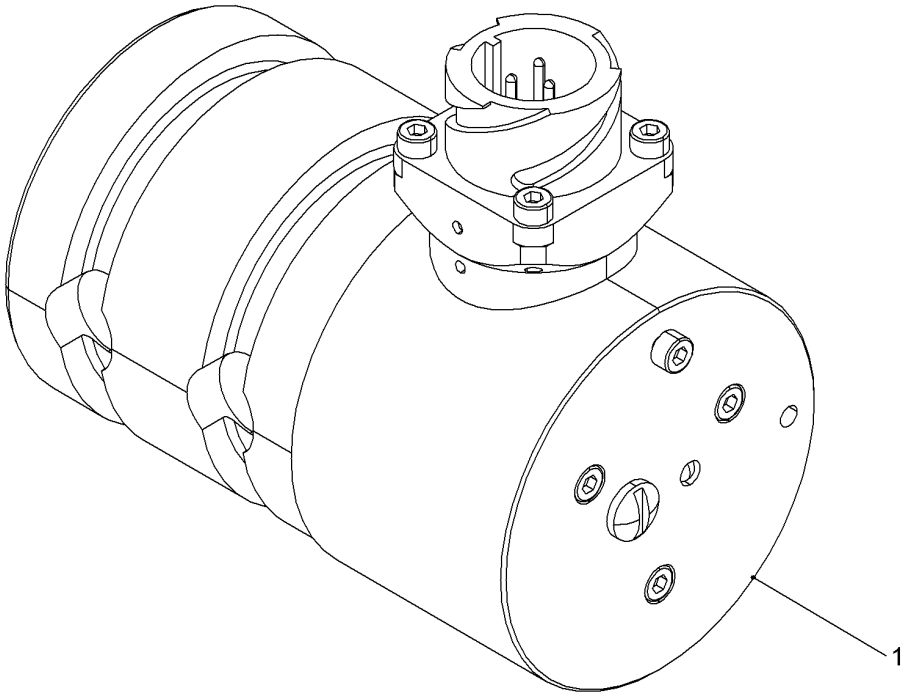

Pos.	Item	Quantity	Description	Bezeichnung	Serie	K
1	11261289	2	FORCE MEASURING AXLE	KRAFTMESSACHSE		

ACHTUNG !
ATTENTION !
ATTENTION !
ATENCIÓN !
ATENÇÃO !
ВНИМАНИЕ

Für Schlauchbestellungen kann über die Schlauchnummer, in der entsprechenden Schlauchliste, die Identnummer festgestellt werden.

For ordering flexible hoses you can find the identification number through the hose-number in the corresponding hose-list.

Pour des ordres de tuyau flexible le nombre d'identification on voit dans la liste de tuyau flexible correspondente.

Para el pedido de manguera, indicar el número de identificación de la manguera de la lista respectiva.

Para se encomendar uma mangueira, consulte o número de identificaçao na respectiva lista de mangueiras.

Для оформления заказов на шланги/рукавы идент. № может быть определен при помощи номера шланга/рукава, указанного в соотетствующем перечне шлангов/рукавов.

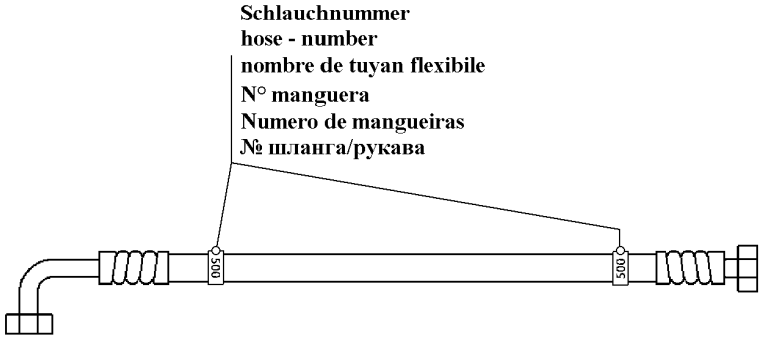

500000

Pos.	Item	Quantity	Description	Bezeichnung	Serie	K
900	994486214	1	HOSE CPL	SCHLAUCH KPL		
901	994486214	1	HOSE CPL	SCHLAUCH KPL		
902	919778814	1	HOSE CPL	SCHLAUCH KPL		
903	918870314	1	HOSE CPL	SCHLAUCH KPL		
904	928014714	1	HOSE CPL	SCHLAUCH KPL		
905	995174014	1	HOSE CPL	SCHLAUCH KPL		
906	928029714	1	HOSE CPL	SCHLAUCH KPL		
907	995865114	1	HOSE CPL	SCHLAUCH KPL		
908	928763814	1	HOSE CPL	SCHLAUCH KPL		
909	928166714	1	HOSE CPL	SCHLAUCH KPL		
910	994486214	1	HOSE CPL	SCHLAUCH KPL		
911	995865114	1	HOSE CPL	SCHLAUCH KPL		
912	928763814	1	HOSE CPL	SCHLAUCH KPL		
913	928166714	1	HOSE CPL	SCHLAUCH KPL		
914	928029714	1	HOSE CPL	SCHLAUCH KPL		
915	991242714	1	HOSE CPL	SCHLAUCH KPL		
917	928121514	1	HOSE CPL	SCHLAUCH KPL		
918	991285814	1	HOSE CPL	SCHLAUCH KPL		

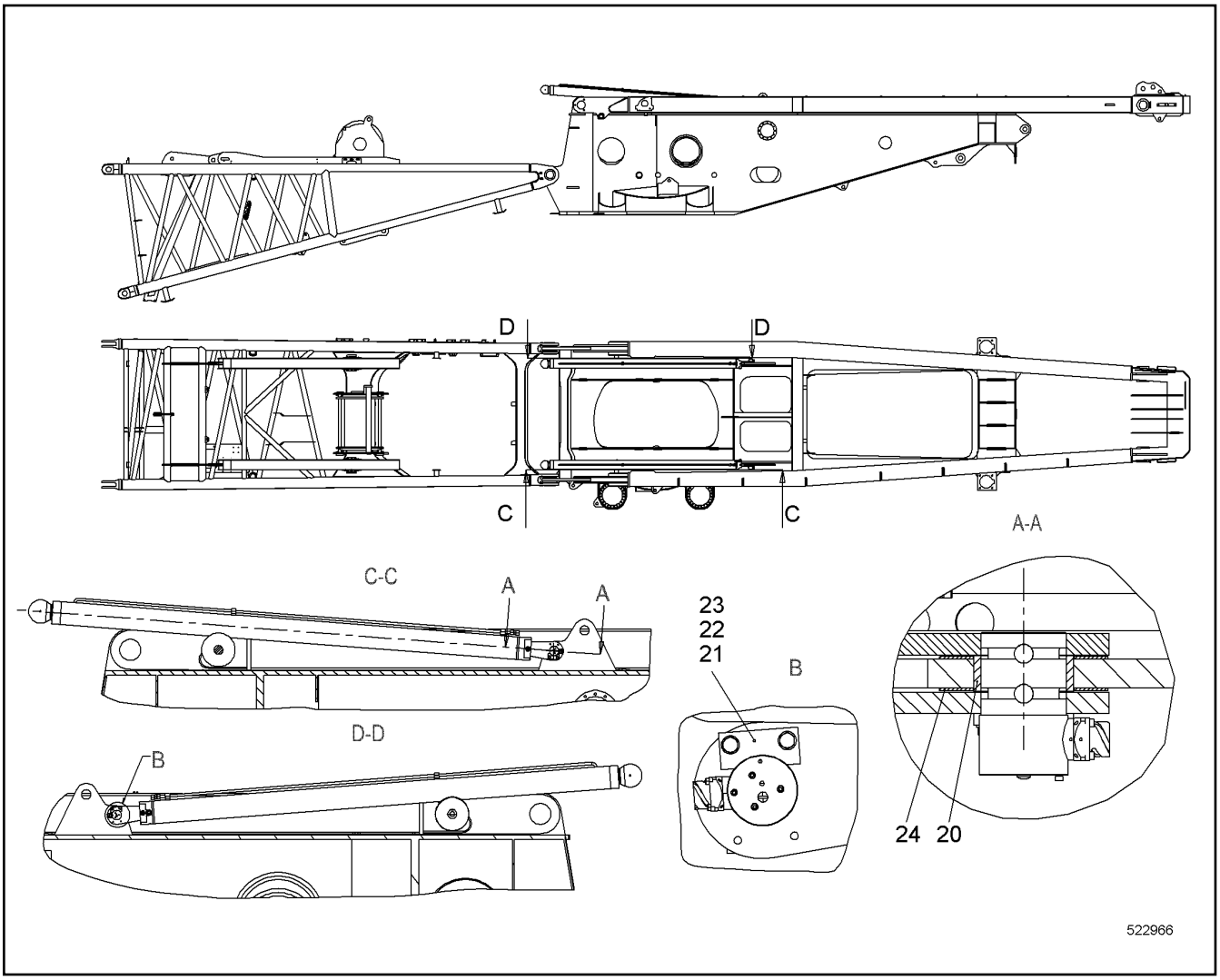

Pos.	Item	Quantity	Description	Bezeichnung	Serie	K
20	10546993	2	BUSHING 60X70X25 CUZN25AL5	BUCHSE		
21	11942341	2	LOCKING PLATE	SICHERUNGSBLECH		
22	420001014	4	WASHER ISO 7089 8 A4	SCHEIBE		
23	406518814	4	HEX SCREW ISO 4017 M8X20 A4-70	SECHSKANTSCHRAUBE		
24	11942312	4	WASHER 1.9X71X118 PA 6 G	SCHEIBE		

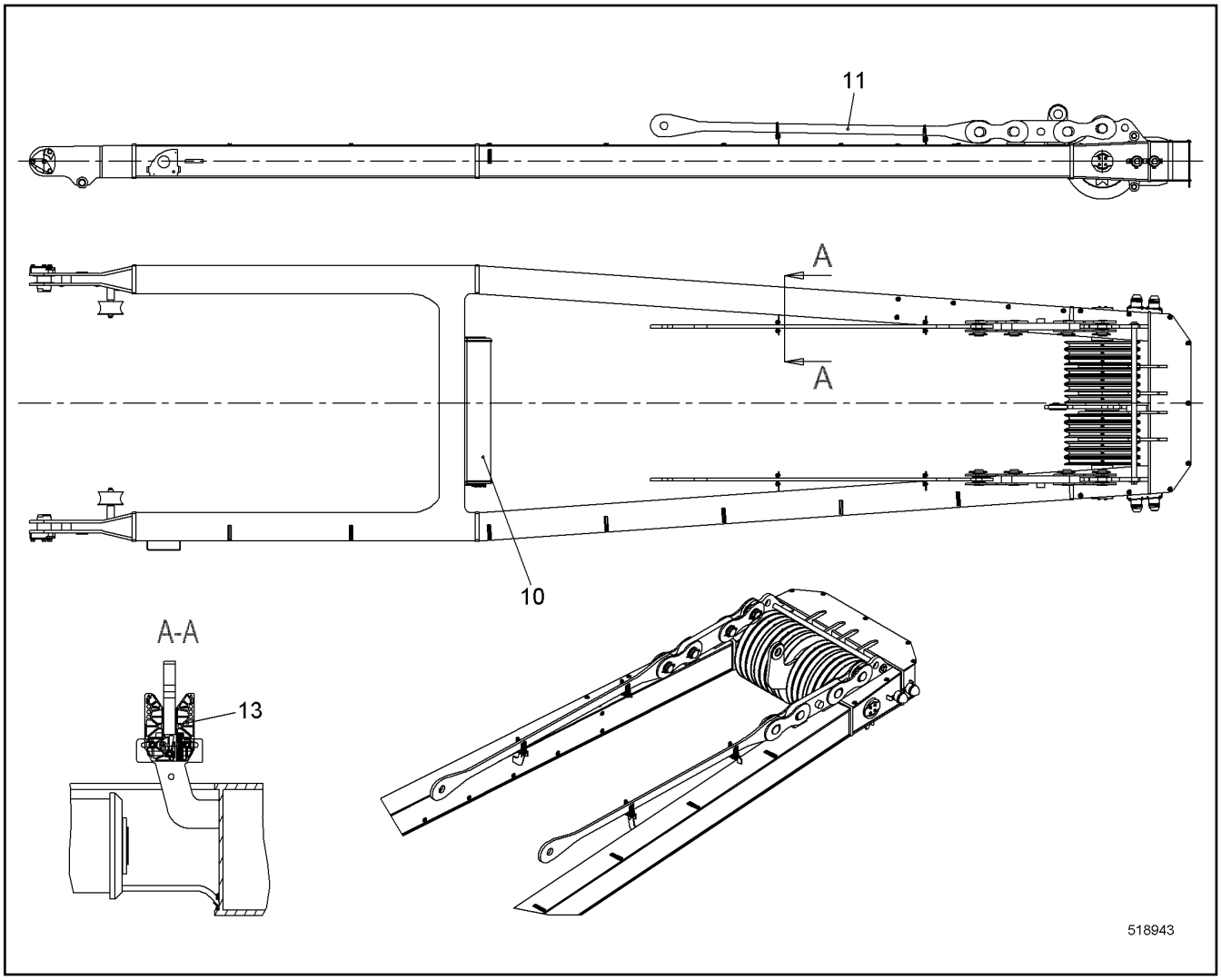

Pos.	Item	Quantity	Description	Bezeichnung	Serie	K
10	11244444	1	A-FRAME 1 CPL ⇨ ❑ 537	A-BOCK 1 KPL		
11	992641714	1	ANCHORING ROD CPL ⇨ ❑ 542	HALTESTANGE KPL		
13	11237498	4	SUPPORT CPL ⇨ ❑ 543	AUFLAGE KPL		

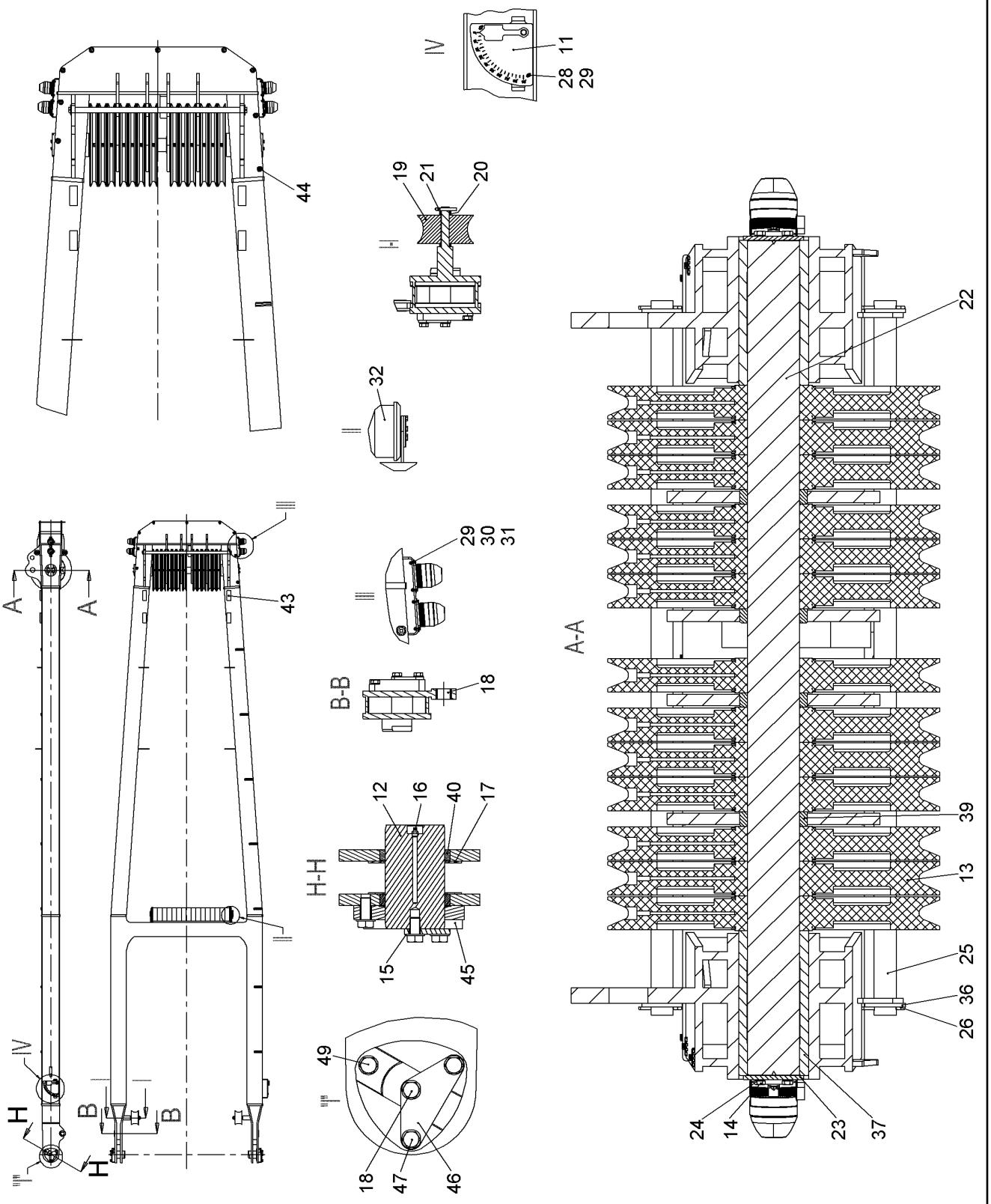

24.5.2017 519818	**138376_ETK_001**	537 (1/2)
LIEBHERR	**A-FRAME 1 CPL** **A-BOCK 1 KPL**	**11 24 444 4**

Pos.	Item	Quantity	Description	Bezeichnung	Serie	K
3	10531207	1	A-FRAME ELECTRICS ⇨ ❑ 539	A-BOCK EL		
11	919058414	1	ANGLE INDICATION ⇨ ❑ 540	WINKELANZEIGE		
12	949389914	2	PIN 115X200 LHRD900-40;10019758	BOLZEN		
13	914690714	13	ROPE PULLEY CPL	SEILROLLE KPL		
14	406517914	8	HEX SCREW ISO 4017 M12X25 A4-70	SECHSKANTSCHRAUBE		
15	10544174	8	WASHER ISO 7089 20	SCHEIBE		
16	7743242	2	HYDRAULIC-TYPE LUBRICAT.NIPPLE	KEGELSCHMIERNIPPEL		
18	11230849	2	BUSHING 50X60X42	BUCHSE		
19	11256217	2	ROLLER	ROLLE		
20	421102414	10	WASHER DIN EN 28738 30 ST;	SCHEIBE		
21	433014214	2	SPLIT PIN ISO 1234 10X63 A4	SPLINT		
22	11239740	1	PIN 100X1606 LHRD900-40;10019758	BOLZEN		
24	10536581	8	WEDGE LOCK WASHER M12 254 SMO;EN 10	KEILSICHERUNGSSCHEIBE		
25	959841814	2	ROPE GUARD TUBE	SEILSCHUTZROHR		
26	433008108	4	SPLIT PIN ISO 1234 6.3X63	SPLINT		
28	10539467	2	SOCKET HEAD SCREW ISO 4762 M6X12 A4-7	ZYLINDERSCHRAUBE		
29	420000414	18	WASHER ISO 7089 6 A4	SCHEIBE		
30	406532614	8	HEX SCREW ISO 4017 M6X20 A4-70	SECHSKANTSCHRAUBE		
31	10540492	8	HEX NUT ISO 10511 M6 A4	SECHSKANTMUTTER		
32	991413714	1	DEFLECTION PULLEY CPL ⇨ ❑ 541	UMLENKROLLE KPL		
36	420003714	4	WASHER ISO 7089 42	SCHEIBE		
37	11239698	2	BUSHING	BUCHSE		
39	959841114	4	BUSHING	BUCHSE		
40	970859103	4	BUSHING 115/135X21 E470;EN 10294-1	BUCHSE		
43	991873614	4	SUPPORT CPL	AUFLAGE KPL		
44	11230237	9	FASTENING BS	BEF SOCKEL		
47	10545854	4	HEX SCREW ISO 4017 M20X75 10.9	SECHSKANTSCHRAUBE		
48	10543919	2	HEX SCREW ISO 4017 M20X35 10.9	SECHSKANTSCHRAUBE		
49	10543921	2	HEX SCREW ISO 4017 M20X45 10.9	SECHSKANTSCHRAUBE		

OHNE BILD
WITHOUT ILLUSTRATION
SANS PLANCHE
SIN FIG.
SEM ILUSTRAÇÃO
БЕЗ ИЗОБРАЖЕНИЯ

600000

Pos.	Item	Quantity	Description	Bezeichnung	Serie	K
31	10530243	2	FORCE MEASURING STRAP	KRAFTMESSLASCHE		
35	10524928	2	FLASHING LIGHT	BLITZLEUCHTE		
37	10524927	2	SIGNAL LAMP	SIGNALLEUCHTE		
41	10563800	1	CABLE LOOM W 40	KABELSTRANG W 40		
50	11314473	1	CABLE LOOM W 40	KABELSTRANG W 40		
51	605013508	2	DUST CAP	STAUBKAPPE		

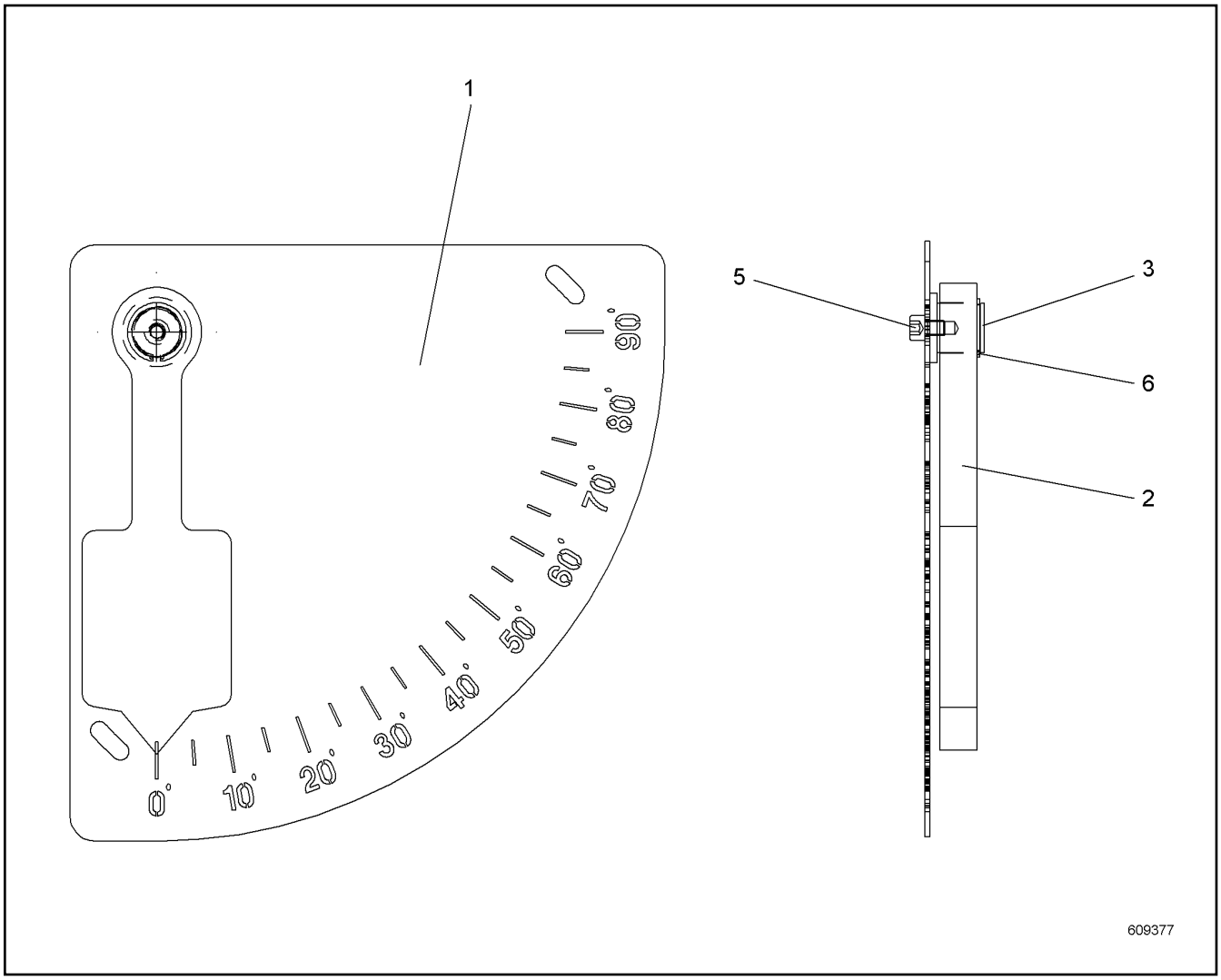

Pos.	Item	Quantity	Description	Bezeichnung	Serie	K
1	956266614	1	WP	WP		
2	956266714	1	WP	WP		
3	956266814	1	PIN 20X23 PA 6 G	BOLZEN		
5	10539466	1	SOCKET HEAD SCREW ISO 4762 M6X8 A4-70	ZYLINDERSCHRAUBE		
6	428001414	1	LOCKING RING DIN 471 20X1.2	SICHERUNGSRING		

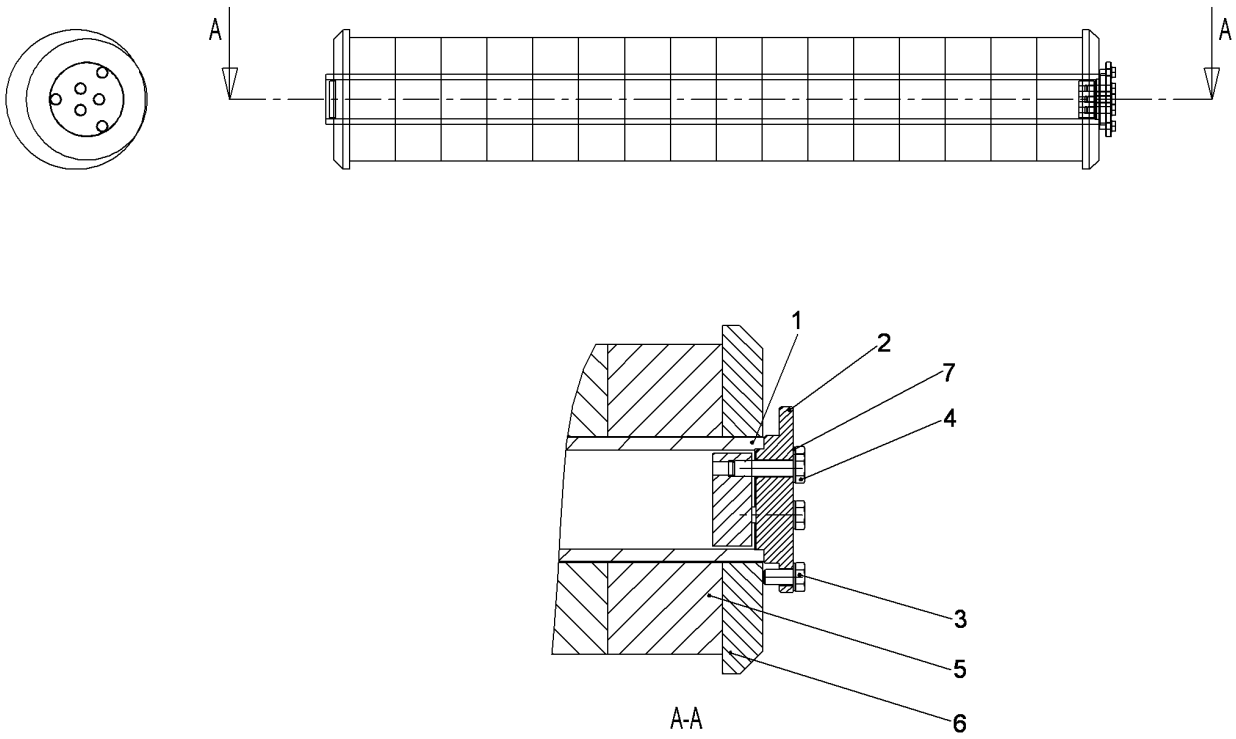

Pos.	Item	Quantity	Description	Bezeichnung	Serie	K
1	991413814	1	AXLE CPL	ACHSE KPL		
3	406518714	3	HEX SCREW ISO 4017 M10X20 A4-70	SECHSKANTSCHRAUBE		
4	406527814	3	HEX SCREW ISO 4017 M10X40 A4-70	SECHSKANTSCHRAUBE		
5	948773814	16	WASHER 81/200X74 PA 6 G	SCHEIBE		
6	970855603	2	WASHER 225/81X26 PA 6 G	SCHEIBE		
7	10447016	6	LOCKING RING 10	SICHERUNGSRING		

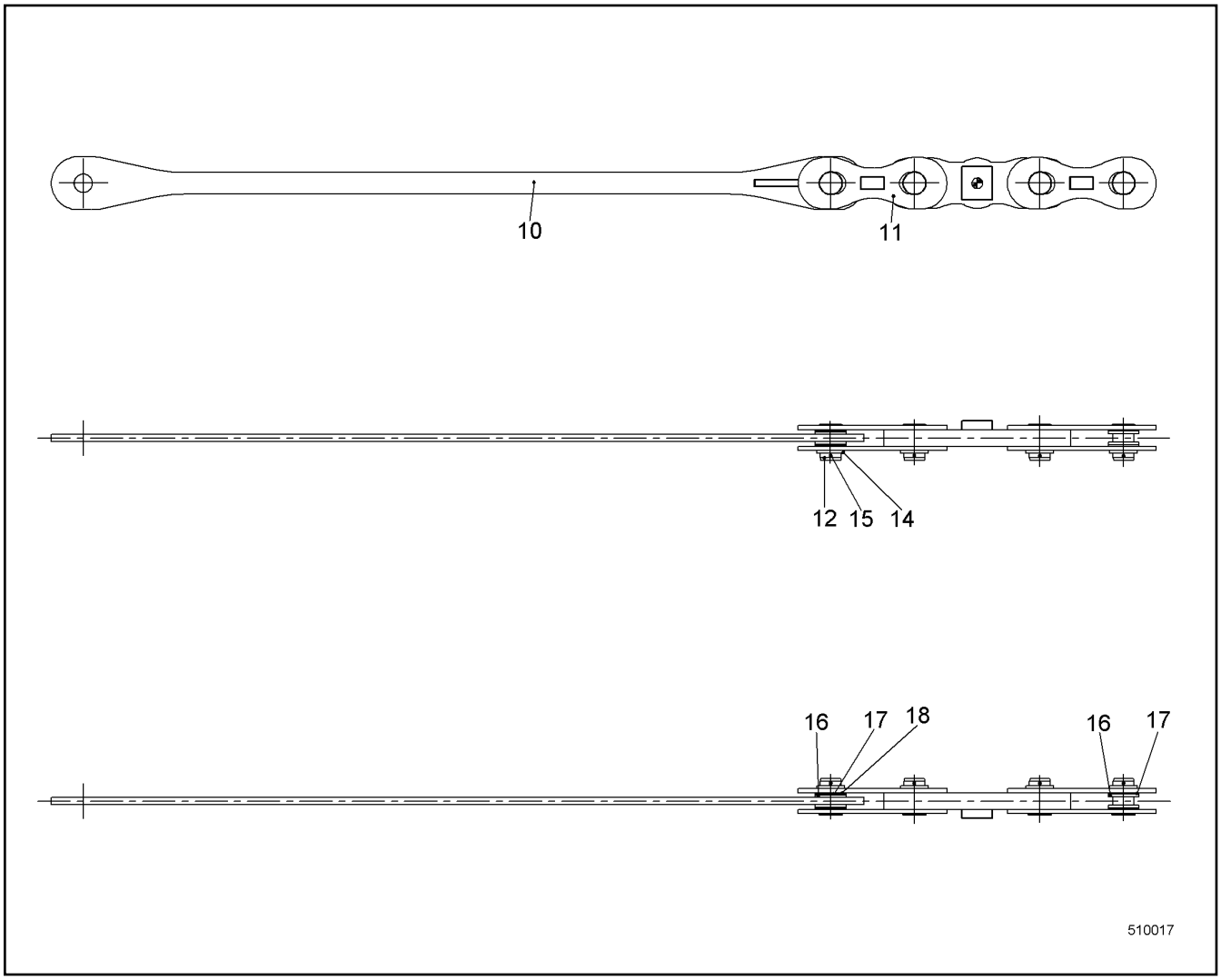

Pos.	Item	Quantity	Description	Bezeichnung	Serie	K
10	10336904	2	ANCHORING ROD	HALTESTANGE		
11	10336761	8	COUPLING LINK	KOPPELLASCHE		
12	959921514	8	PIN 83X131 LHRD900-40;10019758	BOLZEN		
14	421103714	8	WASHER DIN EN 28738 75 ST;	SCHEIBE		
15	433009514	8	SPLIT PIN ISO 1234 8X100 A4	SPLINT		
16	10336924	8	BUSHING 75X110X10 POM;DIN EN ISO 9988	BUCHSE		
17	10336926	8	BUSHING 75X110X5 POM;DIN EN ISO 9988	BUCHSE		
18	10336928	4	BUSHING 75.5X110X2.5 POM;DIN EN ISO 9988	BUCHSE		

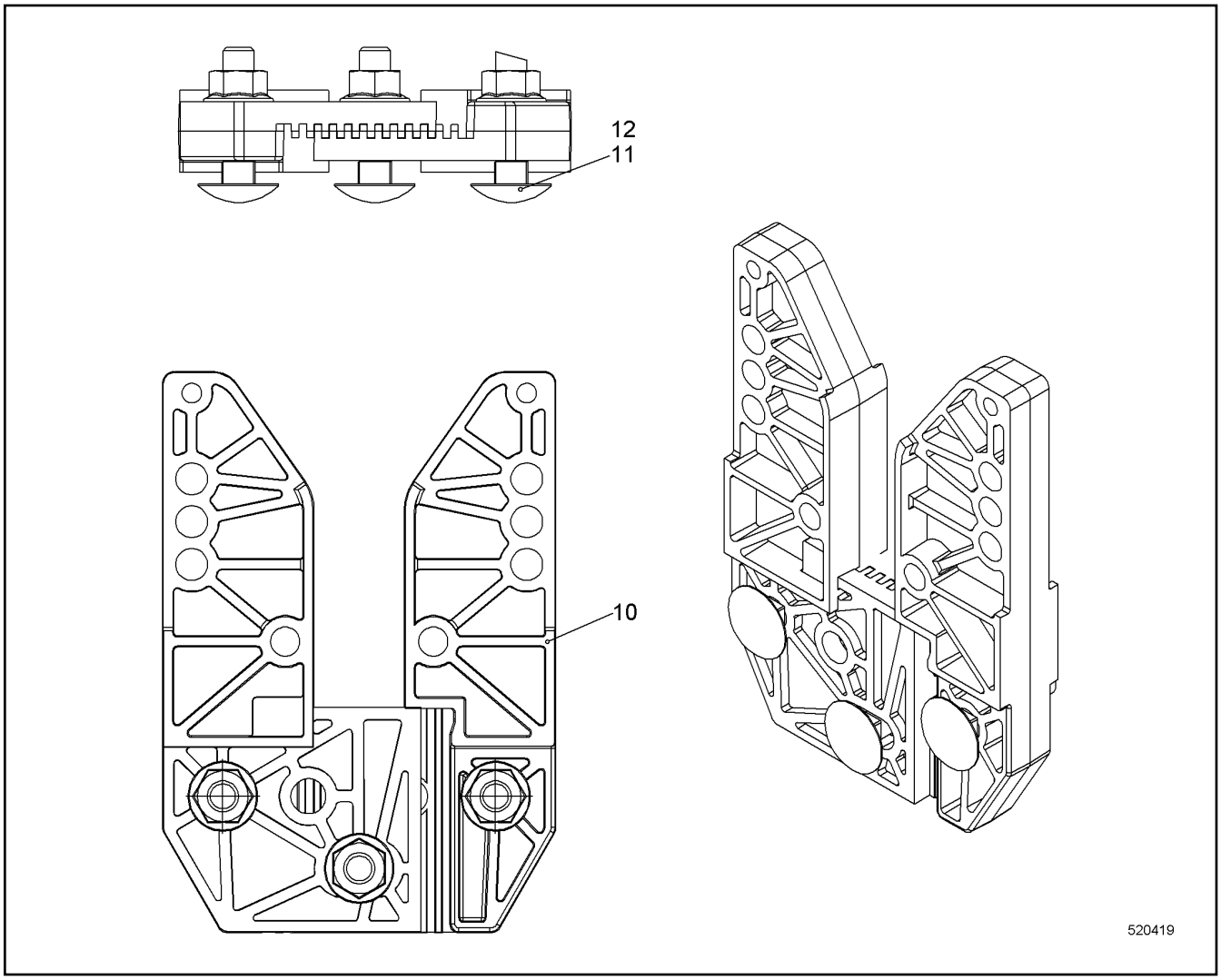

Pos.	Item	Quantity	Description	Bezeichnung	Serie	K
10	11219265	2	SUPPORT	AUFLAGE		
11	11314349	3	CHEESE HEAD SCREW DIN 603 M8X35 A4-70	FLACHRUNDSCHRAUBE		
12	11314341	3	HEX NUT DIN EN 1663 M8 A4	SECHSKANTMUTTER		

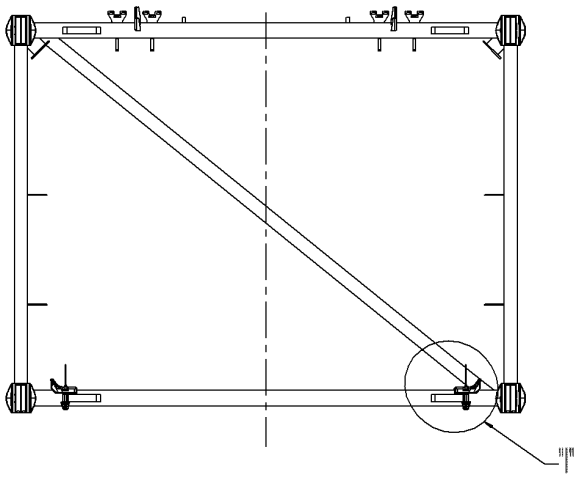

Pos.	Item	Quantity	Description	Bezeichnung	Serie	K
10	992958814	4	SUPPORT ⇨ ❑ 545	AUFLAGE		
11	10350633	2	FASTENER ⇨ ❑ 546	HALTERUNG		

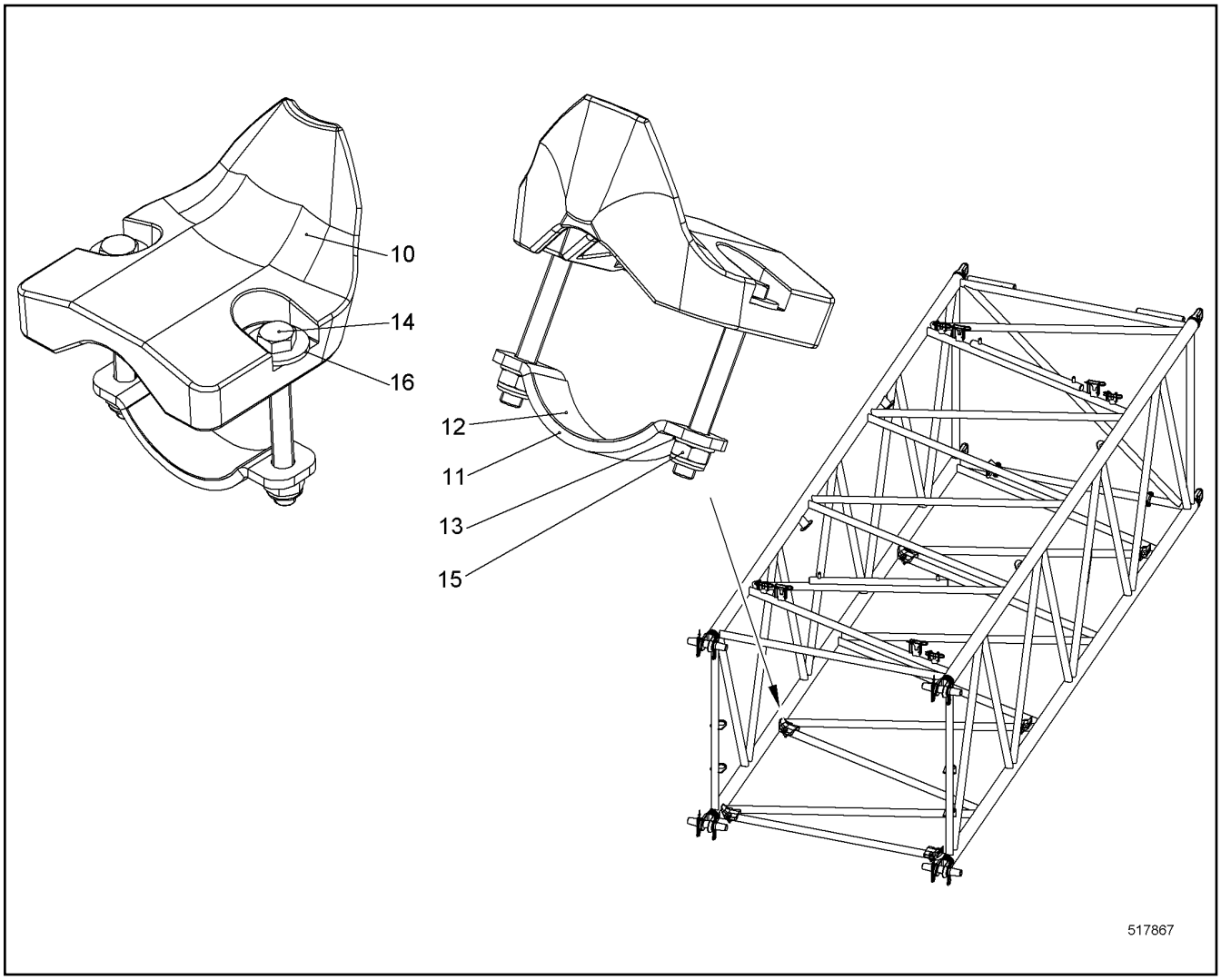

Pos.	Item	Quantity	Description	Bezeichnung	Serie	K
10	289035314	1	SUPPORT	AUFLAGE		
11	10336774	1	CLAMP	SCHELLE		
12	10535526	1	RUBBER	GUMMI		
13	420001114	2	WASHER ISO 7089 10 A4	SCHEIBE		
14	406512114	2	HEX SCREW ISO 4017 M10X90 A4-70	SECHSKANTSCHRAUBE		
15	10540494	2	HEX NUT ISO 10511 M10 A4	SECHSKANTMUTTER		
16	10540511	2	WASHER ISO 7093-1 10 A4	SCHEIBE		

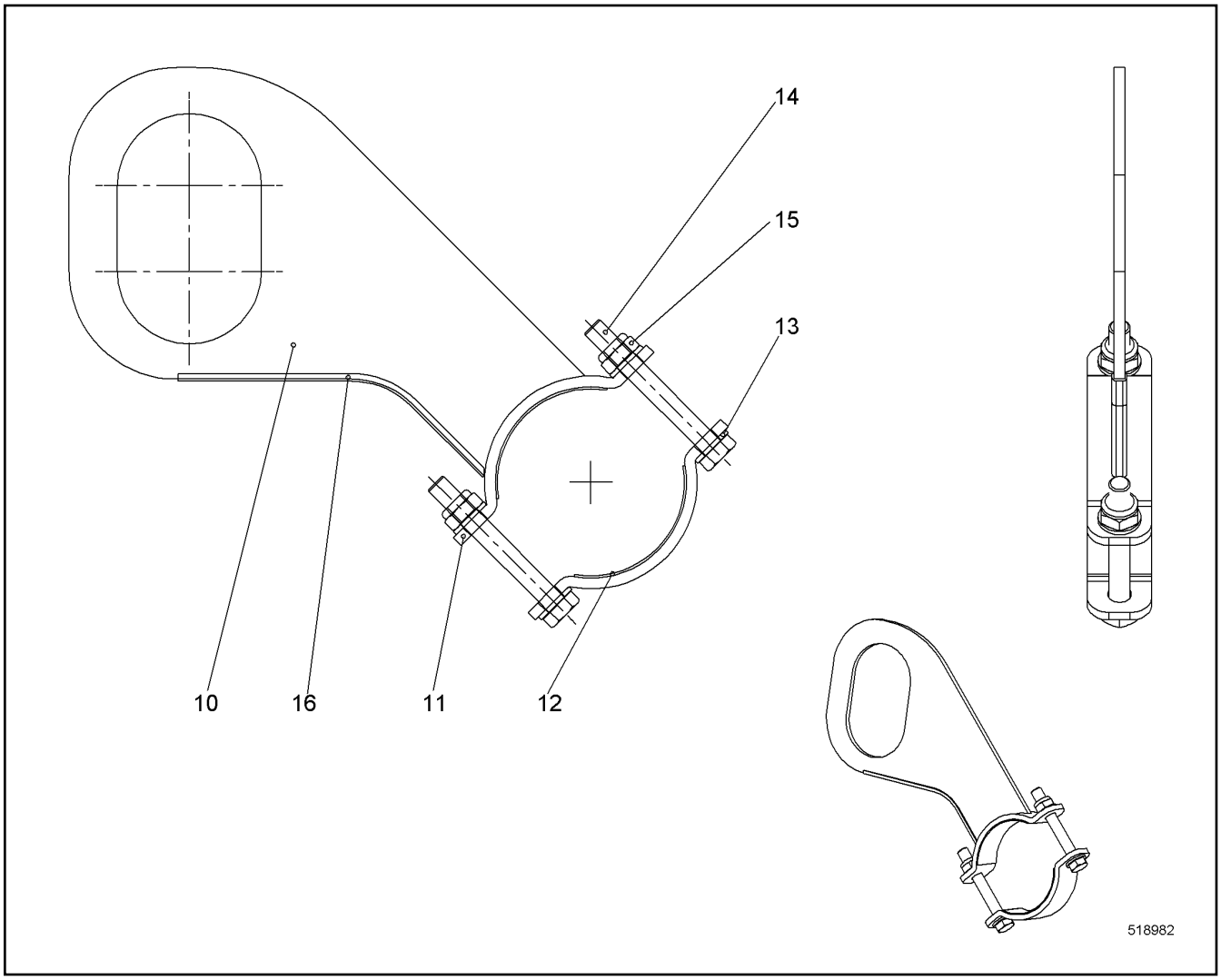

Pos.	Item	Quantity	Description	Bezeichnung	Serie	K
10	10350632	1	FASTENER	HALTERUNG		
11	10336774	2	CLAMP	SCHELLE		
12	10535526	2	RUBBER	GUMMI		
13	420001114	4	WASHER ISO 7089 10 A4	SCHEIBE		
14	406527914	2	HEX SCREW ISO 4017 M10X80 A4-70	SECHSKANTSCHRAUBE		
15	10540494	2	HEX NUT ISO 10511 M10 A4	SECHSKANTMUTTER		
16	262103101	0.16	FLEXIBLE EDGE PROTECTOR	KANTENSCHUTZ FLEXIBEL		

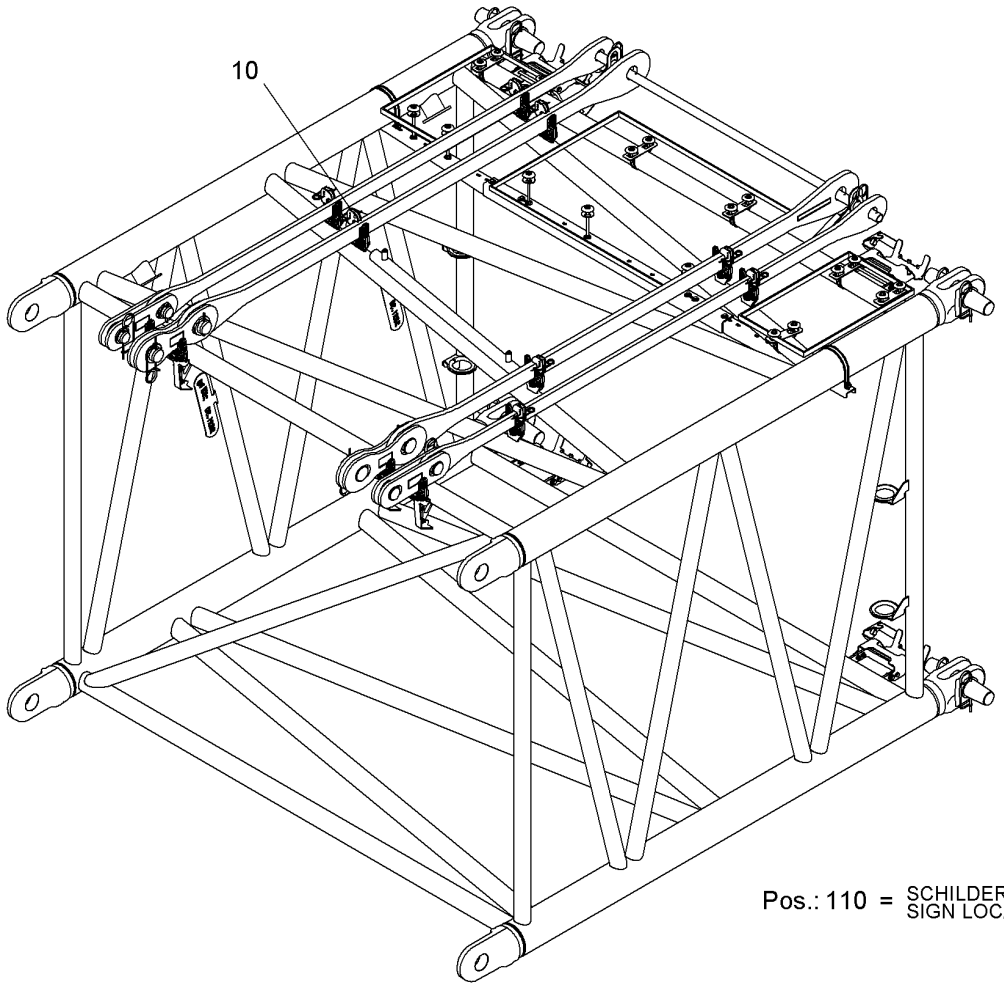

Pos.	Item	Quantity	Description	Bezeichnung	Serie	K
10	11937499	1	ASSEMBLY UNIT ⇨ ❑ 548	MONTAGEEINHEIT		
110	11266901	1	SIGN LOCATIONS	SCHILDER ANORD		

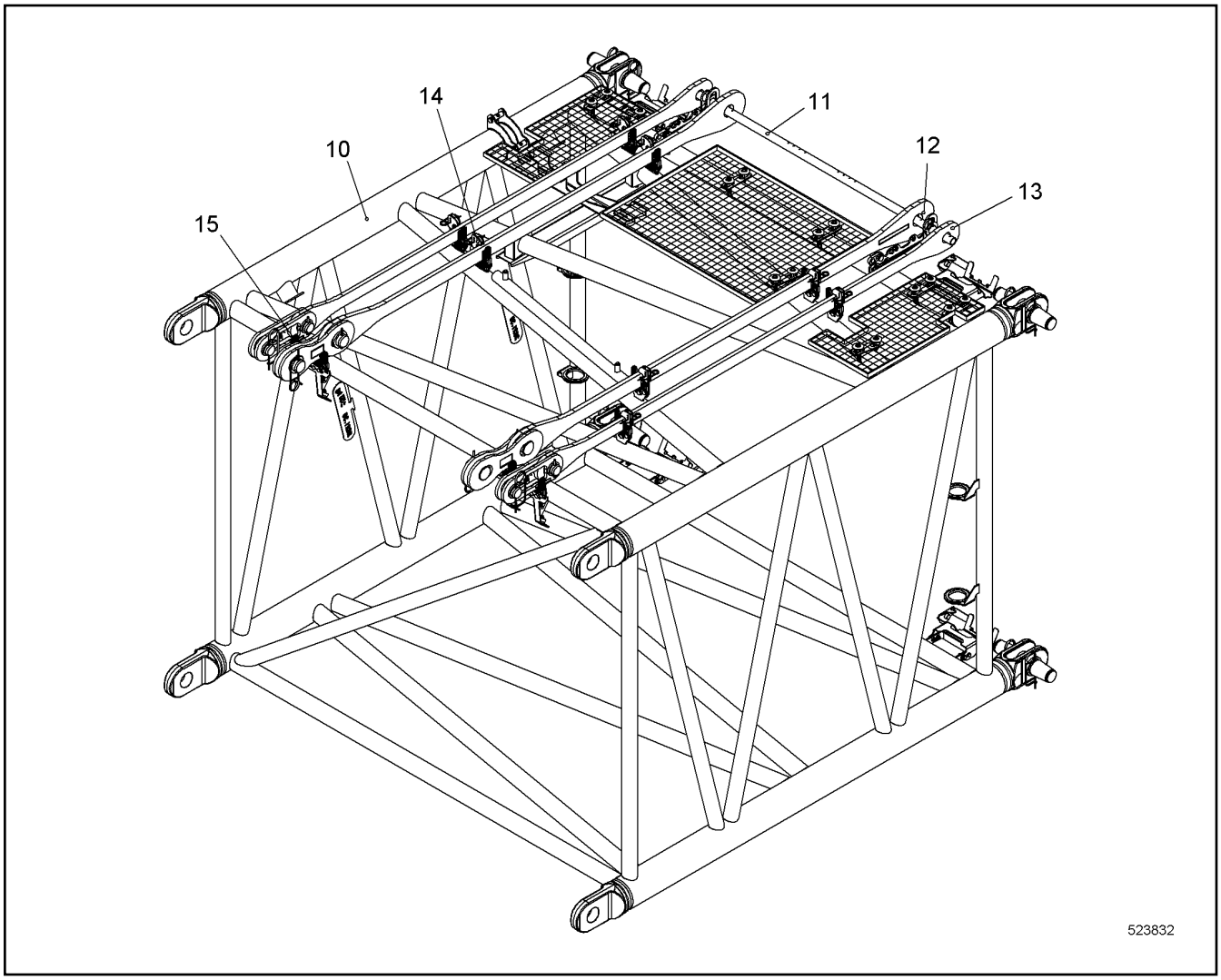

Pos.	Item	Quantity	Description	Bezeichnung	Serie	K
10	11245703	1	BOOM INTERMEDIATE SECTION CPL ⇨ ❑ 549	AL ZWISCHENSTUECK KPL		
11	11940876	1	TRANSPORT LASHING ⇨ ❑ 558	TRANSPORTSICHERUNG		
12	992440414	1	ANCHORING ROD CPL ⇨ ❑ 560	HALTESTANGE KPL		
13	11937037	2	ANCHORING ROD CPL ⇨ ❑ 561	HALTESTANGE KPL		
14	11232907	8	SUPPORT CPL ⇨ ❑ 562	AUFLAGE KPL		
15	11232922	4	SUPPORT CPL ⇨ ❑ 563	AUFLAGE KPL		

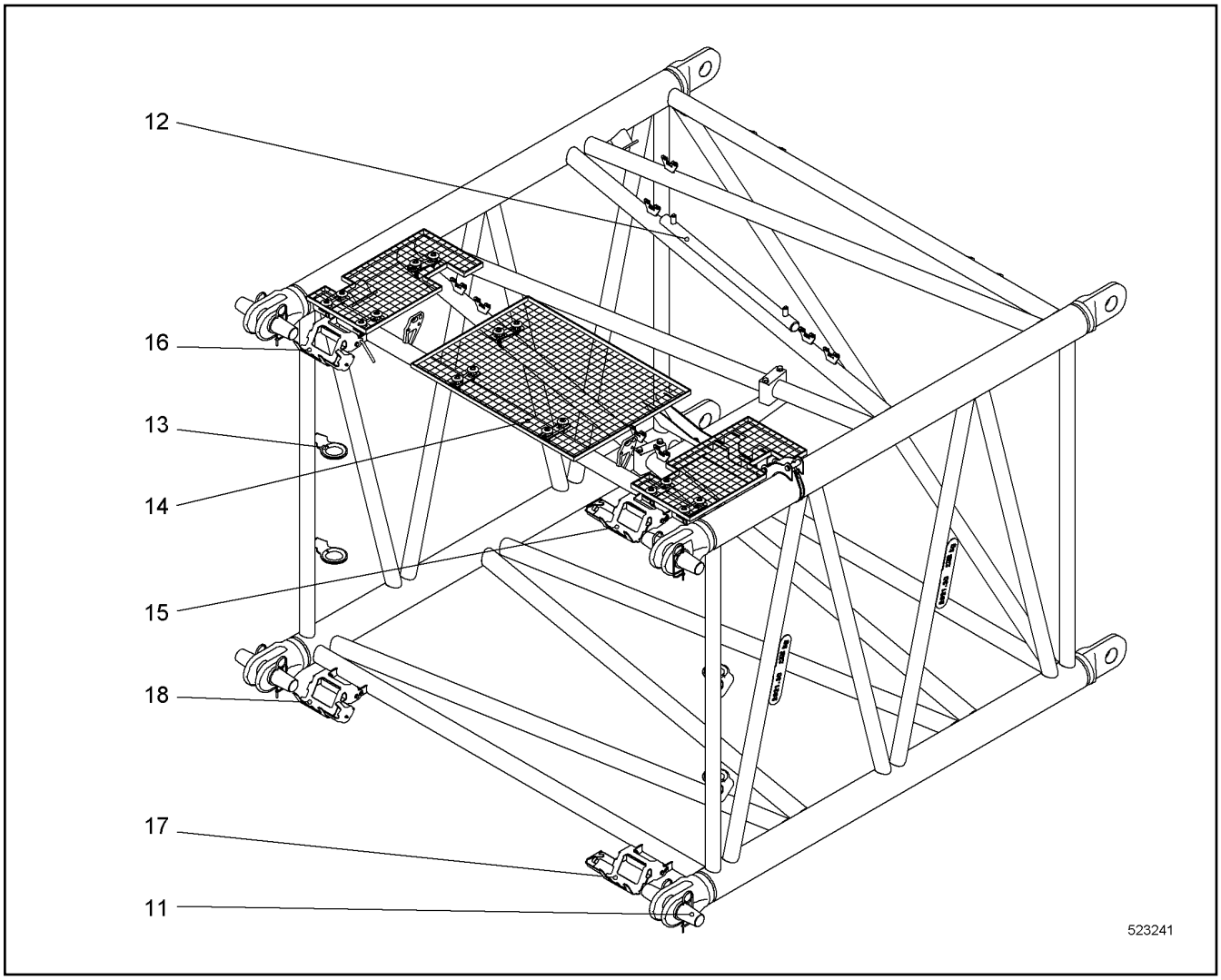

Pos.	Item	Quantity	Description	Bezeichnung	Serie	K
10	11245698	1	BOOM INTERM.SECTION ST.CONST.	AL ZWISCHENSTUECK SCHWK		
11	11287264	4	PIN CPL ⇨ ❑ 550	BOLZEN KPL		
12	11287255	1	ROPE GUARD CPL ⇨ ❑ 551	SEILSCHUTZ KPL		
13	226017802	1.132	EDGE PROTECTION METER WARE	KANTENSCHUTZ METERWARE		
14	11283908	1	BOOM ACCESS ⇨ ❑ 552	AL BEGEHUNG		
15	11283977	1	SUMP PAN CPL ⇨ ❑ 554	AUFFANGWANNE KPL		
16	11283978	1	SUMP PAN CPL ⇨ ❑ 555	AUFFANGWANNE KPL		
17	11283995	1	SUMP PAN CPL ⇨ ❑ 556	AUFFANGWANNE KPL		
18	11283997	1	SUMP PAN CPL ⇨ ❑ 557	AUFFANGWANNE KPL		

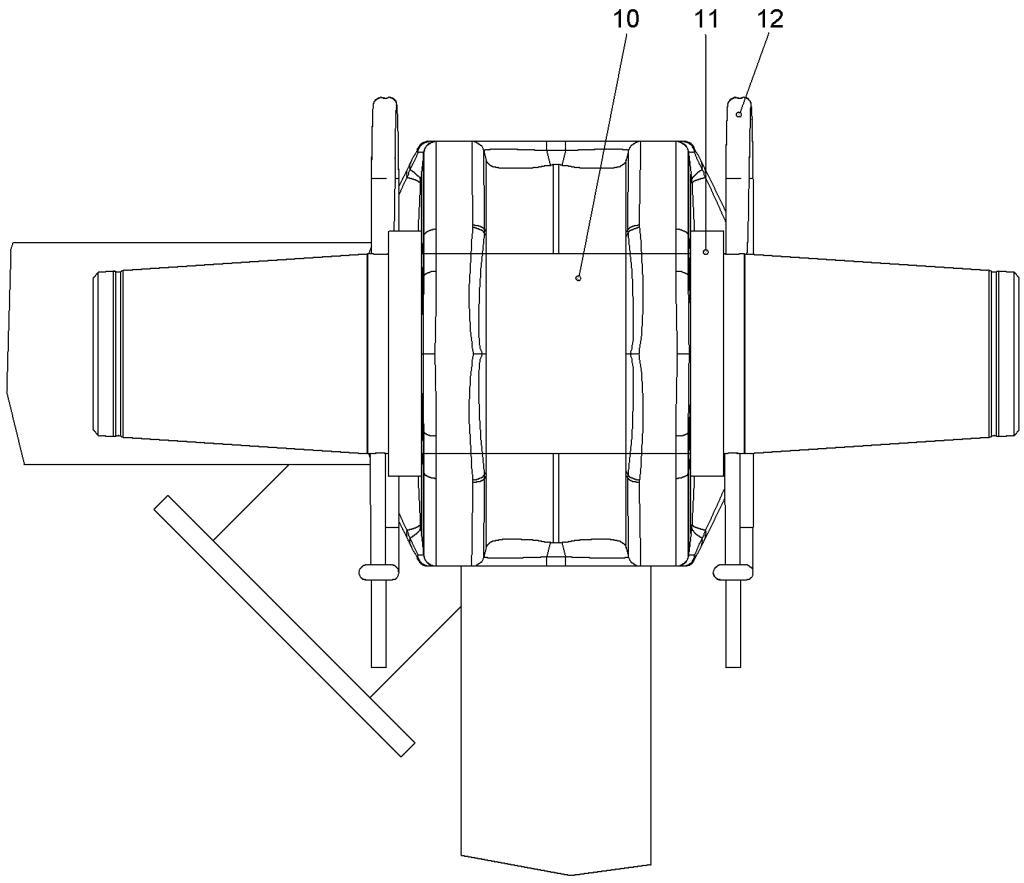

Pos.	Item	Quantity	Description	Bezeichnung	Serie	K
10	950581614	1	PIN 80X371 LHRD900-40;10019758	BOLZEN		
11	421103814	2	WASHER DIN EN 28738 80 ST;	SCHEIBE		
12	433105008	2	RETAINING SPRING DIN 2194 6MM FS	SICHERUNGSFEDER		

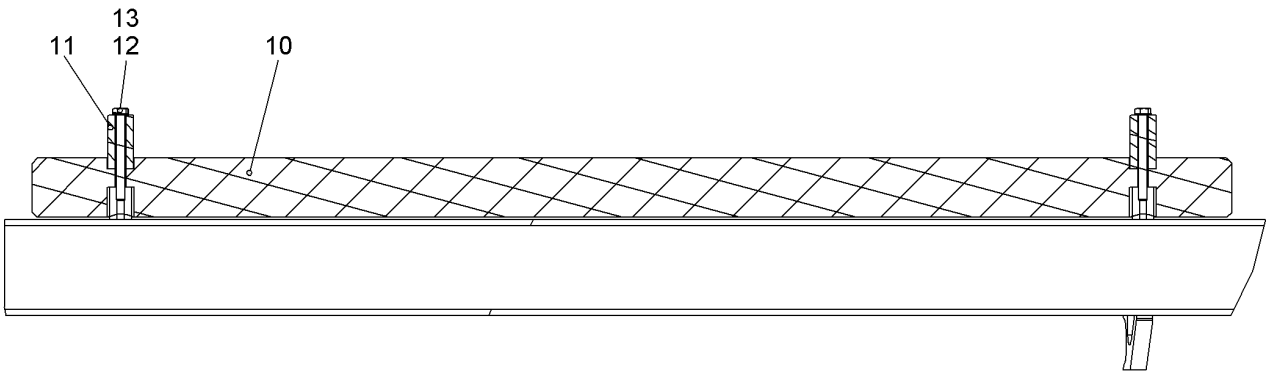

Pos.	Item	Quantity	Description	Bezeichnung	Serie	K
10	971303203	1	STRIP	LEISTE		
11	956009714	2	INTERMEDIATE PART	ZWISCHENSTUECK		
12	10558857	2	LOCKING RING 8 A2	SICHERUNGSRING		
13	10538809	2	HEX SCREW ISO 4017 M8X80 A4-70	SECHSKANTSCHRAUBE		

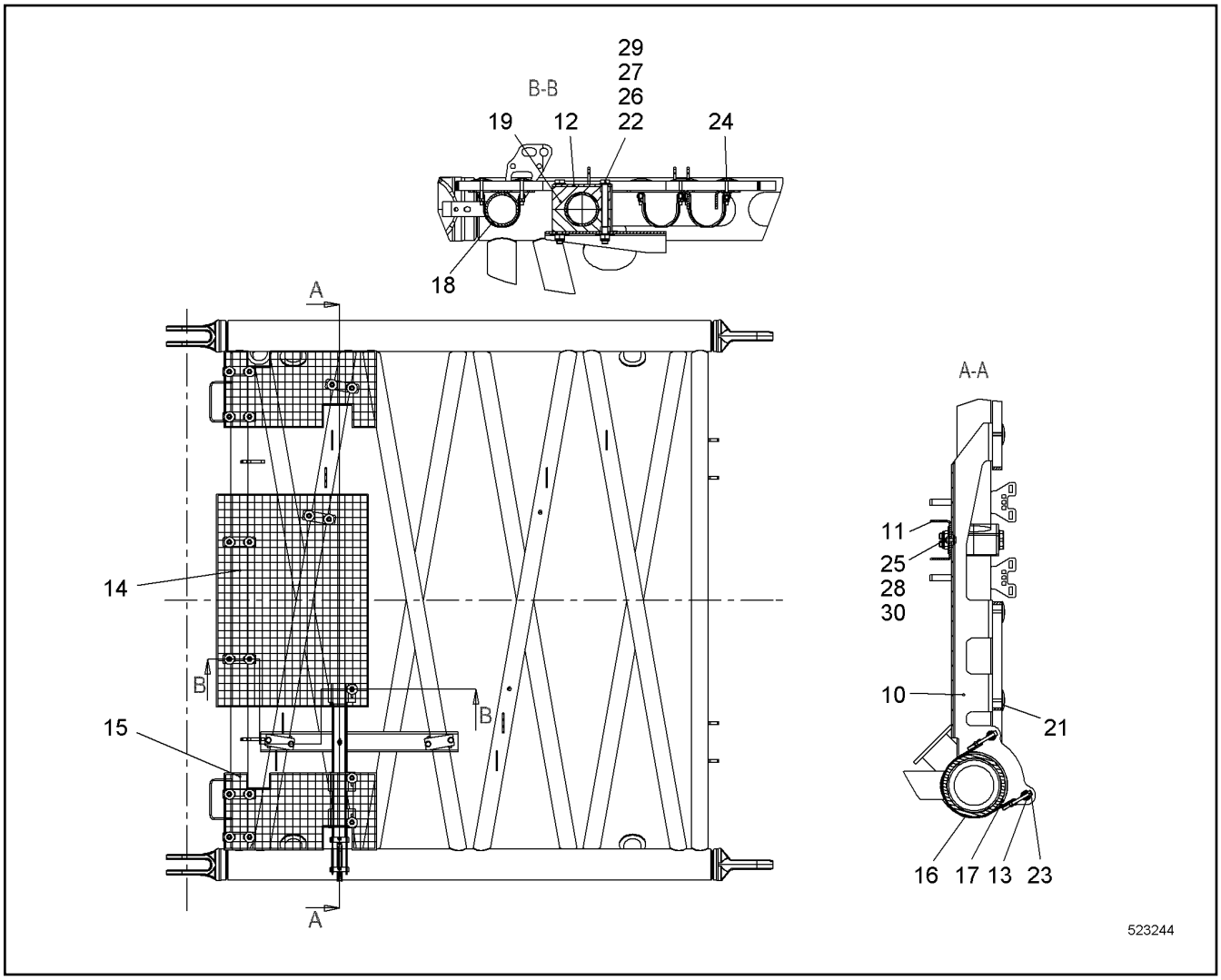

Pos.	Item	Quantity	Description	Bezeichnung	Serie	K
10	11311241	1	PLATE	BLECH		
11	11311262	1	PLATE	BLECH		
12	11310952	2	PLATE	BLECH		
13	11310955	2	AXLE	ACHSE		
14	10530418	1	GRATING	GITTERROST		
15	11311245	2	GRATING	GITTERROST		
16	10531873	1	TIGHTENING STRAP HINGE PIN	GELENKBOLZENSPANNBAND		
17	10352462	0.422	FLEXIBLE EDGE PROTECTOR	KANTENSCHUTZ FLEXIBEL		
18	11283913	8	FIXING CLAMP ⇨ ❑ 553	BEFESTIGUNGSCHELLE		
19	602017114	4	CLAMP-HALF	KLEMMHAELFTE		
21	10098157	3	DISH	TELLER		
22	10543975	4	HEX SCREW ISO 4014 M16X160 10.9	SECHSKANTSCHRAUBE		
23	10539492	2	SOCKET HEAD SCREW ISO 4762 M8X80 A4-7	ZYLINDERSCHRAUBE		
24	10538807	3	HEX SCREW ISO 4017 M8X50 A4-70	SECHSKANTSCHRAUBE		
25	406501414	1	HEX SCREW ISO 4017 M8X25 A4-70	SECHSKANTSCHRAUBE		
26	10544172	4	WASHER ISO 7089 16	SCHEIBE		
27	10544173	4	WASHER ISO 7093-1 16	SCHEIBE		
28	10540510	5	WASHER ISO 7093-1 8 A4	SCHEIBE		
29	10544155	4	HEX NUT DIN 985 M16 10	SECHSKANTMUTTER		
30	10540493	6	HEX NUT ISO 10511 M8 A4	SECHSKANTMUTTER		

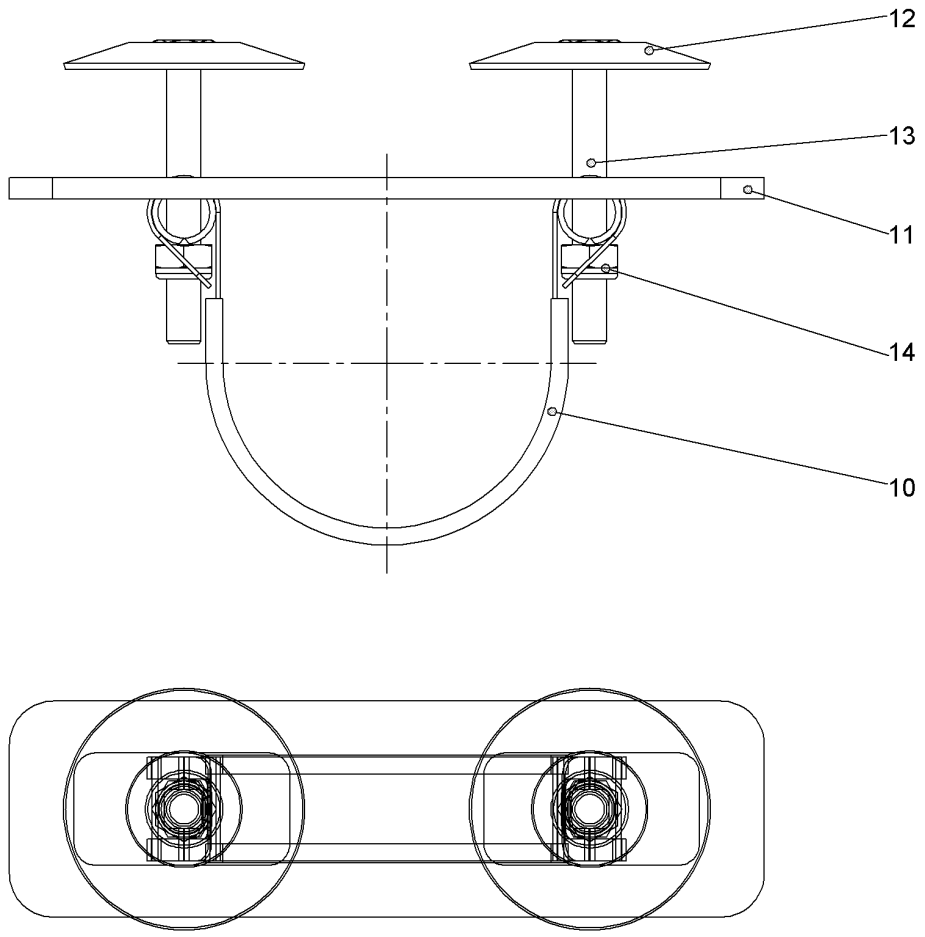

Pos.	Item	Quantity	Description	Bezeichnung	Serie	K
10	10530689	1	TIGHTENING STRAP HINGE PIN	GELENKBOLZENSPANNBAND		
11	11285382	1	RUBBER	GUMMI		
12	10098157	2	DISH	TELLER		
13	10331507	2	HEX SCREW ISO 4017 M8X65 A4-70	SECHSKANTSCHRAUBE		
14	10540493	2	HEX NUT ISO 10511 M8 A4	SECHSKANTMUTTER		

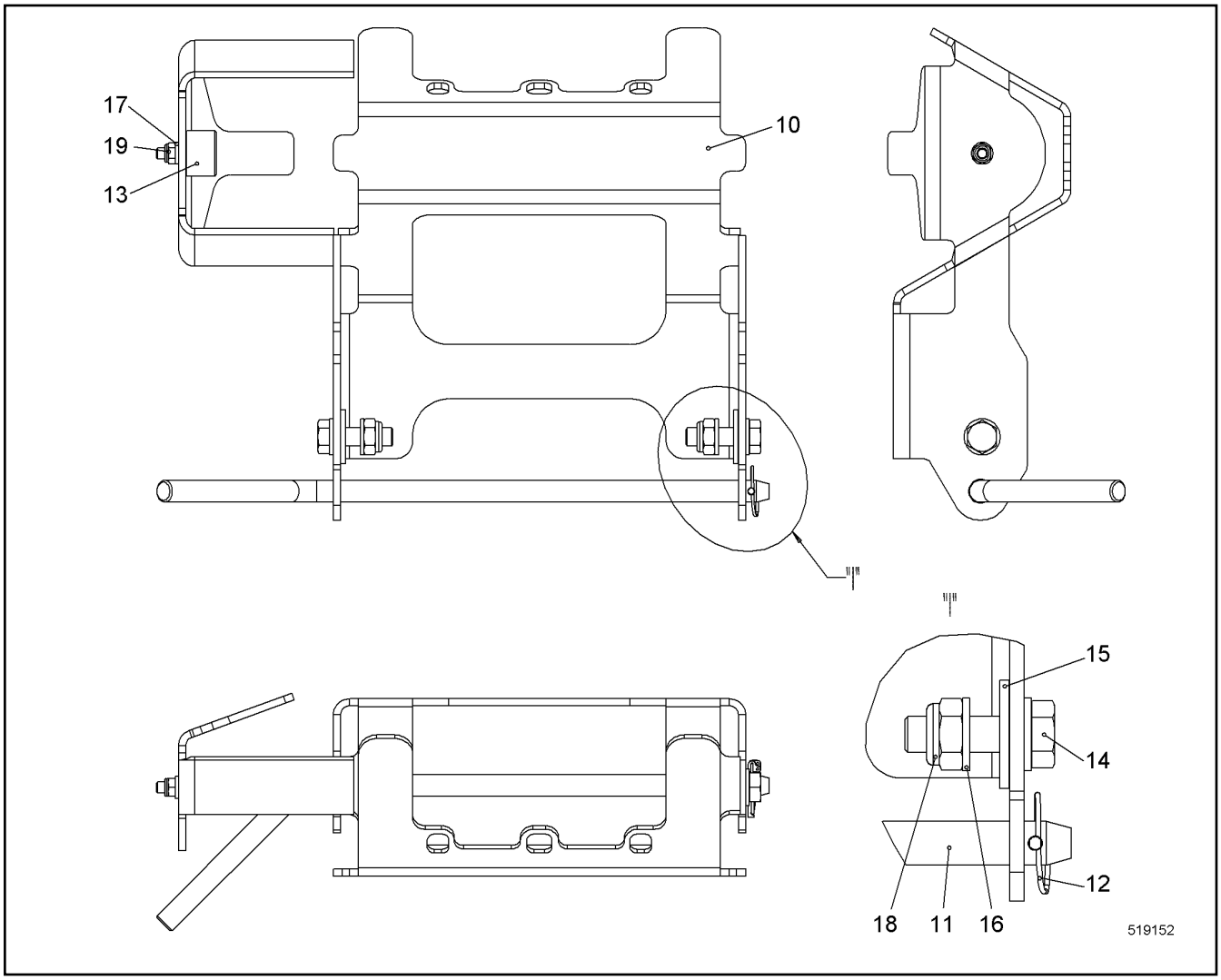

Pos.	Item	Quantity	Description	Bezeichnung	Serie	K
10	10349599	1	SUPPORT SHEET	AUFLAGEBLECH		
11	950490414	1	PLUG	STECKER		
12	485565814	1	SAFETY PLUG W HINGE-LID 4X27	SICHERHEITSKLAPPSTECKER		
13	726612214	1	RUBBER MOUNT	LAGER GUMMI		
14	406509314	2	HEX SCREW ISO 4017 M10X35 A4-70	SECHSKANTSCHRAUBE		
15	10540511	2	WASHER ISO 7093-1 10 A4	SCHEIBE		
16	420001114	4	WASHER ISO 7089 10 A4	SCHEIBE		
17	420000414	1	WASHER ISO 7089 6 A4	SCHEIBE		
18	10540494	2	HEX NUT ISO 10511 M10 A4	SECHSKANTMUTTER		
19	10540492	1	HEX NUT ISO 10511 M6 A4	SECHSKANTMUTTER		

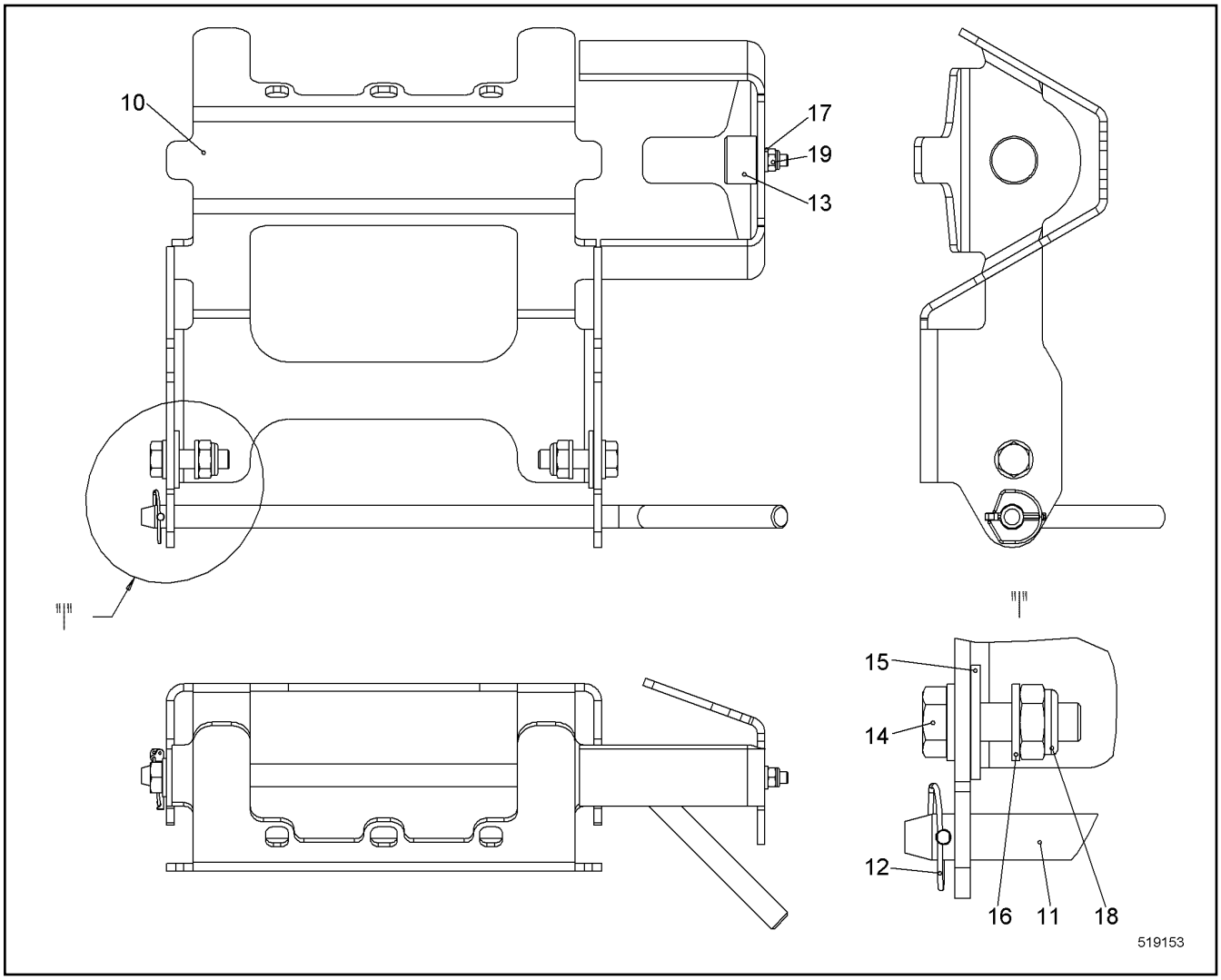

Pos.	Item	Quantity	Description	Bezeichnung	Serie	K
10	10349598	1	SUPPORT SHEET	AUFLAGEBLECH		
11	950490414	1	PLUG	STECKER		
12	485565814	1	SAFETY PLUG W HINGE-LID 4X27	SICHERHEITSKLAPPSTECKER		
13	726612214	1	RUBBER MOUNT	LAGER GUMMI		
14	406509314	2	HEX SCREW ISO 4017 M10X35 A4-70	SECHSKANTSCHRAUBE		
15	10540511	2	WASHER ISO 7093-1 10 A4	SCHEIBE		
16	420001114	4	WASHER ISO 7089 10 A4	SCHEIBE		
17	420000414	1	WASHER ISO 7089 6 A4	SCHEIBE		
18	10540494	2	HEX NUT ISO 10511 M10 A4	SECHSKANTMUTTER		
19	10540492	1	HEX NUT ISO 10511 M6 A4	SECHSKANTMUTTER		

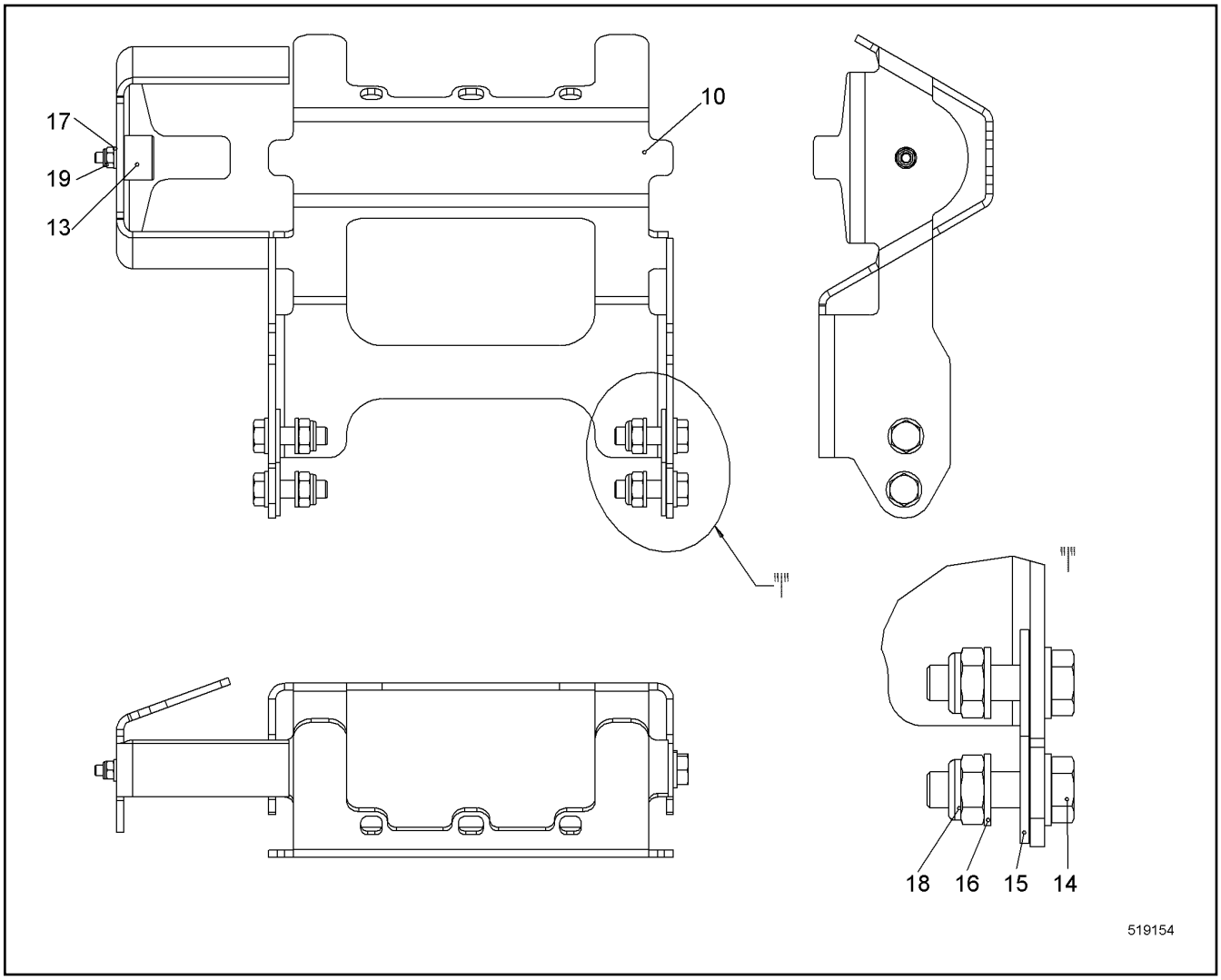

Pos.	Item	Quantity	Description	Bezeichnung	Serie	K
10	10349599	1	SUPPORT SHEET	AUFLAGEBLECH		
13	726612214	1	RUBBER MOUNT	LAGER GUMMI		
14	406509314	4	HEX SCREW ISO 4017 M10X35 A4-70	SECHSKANTSCHRAUBE		
15	10540511	4	WASHER ISO 7093-1 10 A4	SCHEIBE		
16	420001114	8	WASHER ISO 7089 10 A4	SCHEIBE		
17	420000414	1	WASHER ISO 7089 6 A4	SCHEIBE		
18	10540494	4	HEX NUT ISO 10511 M10 A4	SECHSKANTMUTTER		
19	10540492	1	HEX NUT ISO 10511 M6 A4	SECHSKANTMUTTER		

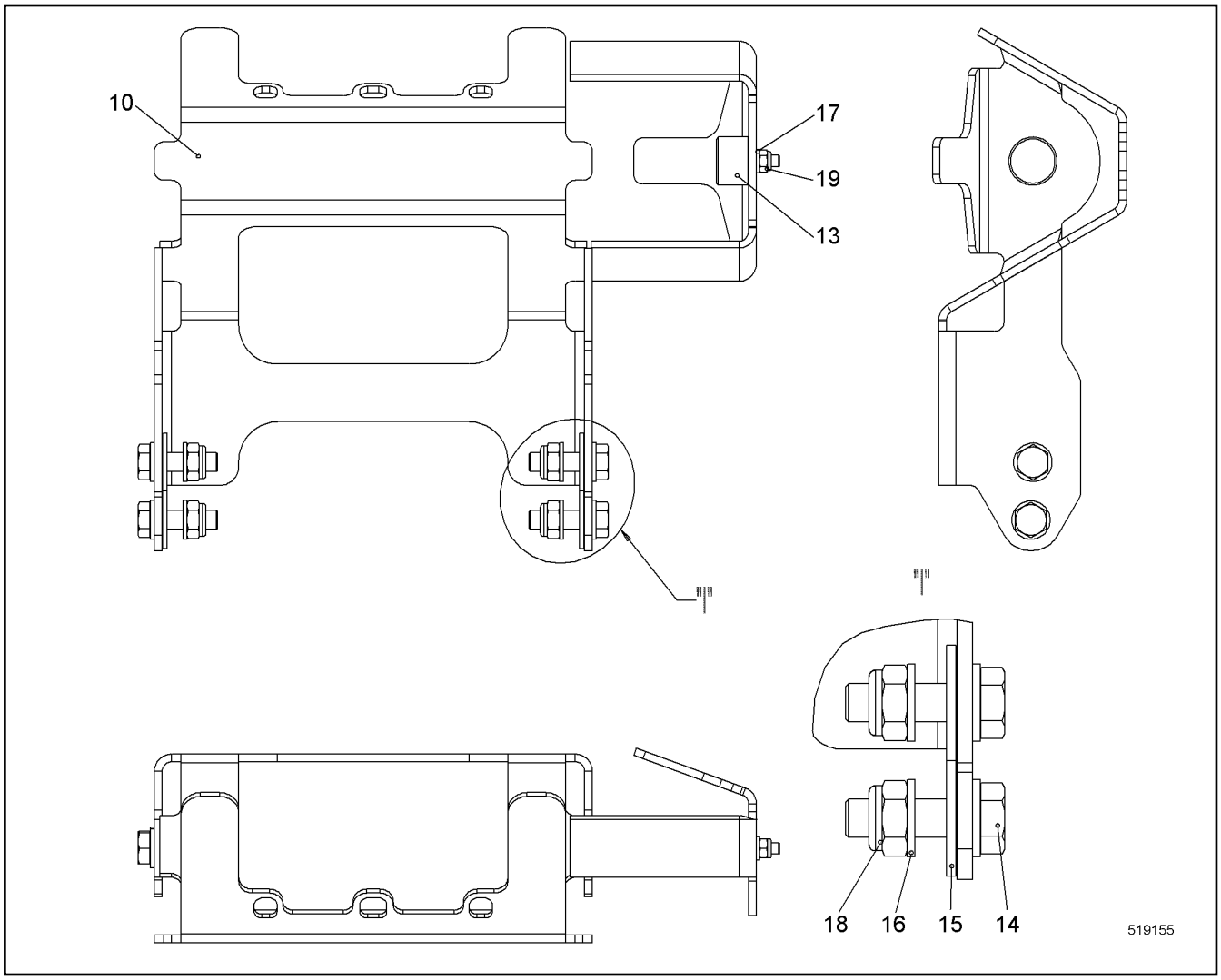

Pos.	Item	Quantity	Description	Bezeichnung	Serie	K
10	10349598	1	SUPPORT SHEET	AUFLAGEBLECH		
13	726612214	1	RUBBER MOUNT	LAGER GUMMI		
14	406509314	4	HEX SCREW ISO 4017 M10X35 A4-70	SECHSKANTSCHRAUBE		
15	10540511	4	WASHER ISO 7093-1 10 A4	SCHEIBE		
16	420001114	8	WASHER ISO 7089 10 A4	SCHEIBE		
17	420000414	1	WASHER ISO 7089 6 A4	SCHEIBE		
18	10540494	4	HEX NUT ISO 10511 M10 A4	SECHSKANTMUTTER		
19	10540492	1	HEX NUT ISO 10511 M6 A4	SECHSKANTMUTTER		

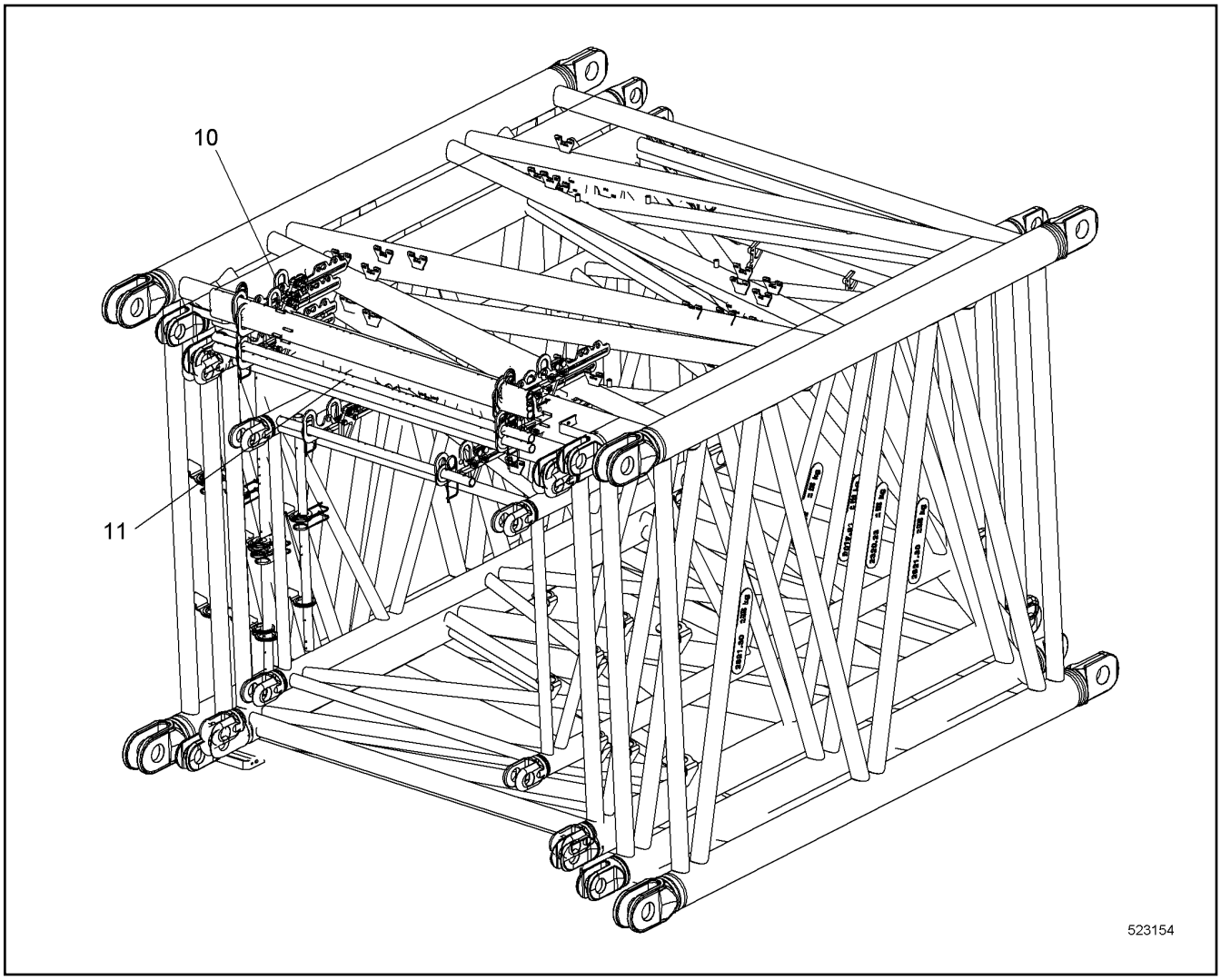

Pos.	Item	Quantity	Description	Bezeichnung	Serie	K
10	11940878	1	ASSEMBLY UNIT ⇨ ❑ 559	MONTAGEEINHEIT		
11	289057714	1	TUBE	ROHR		

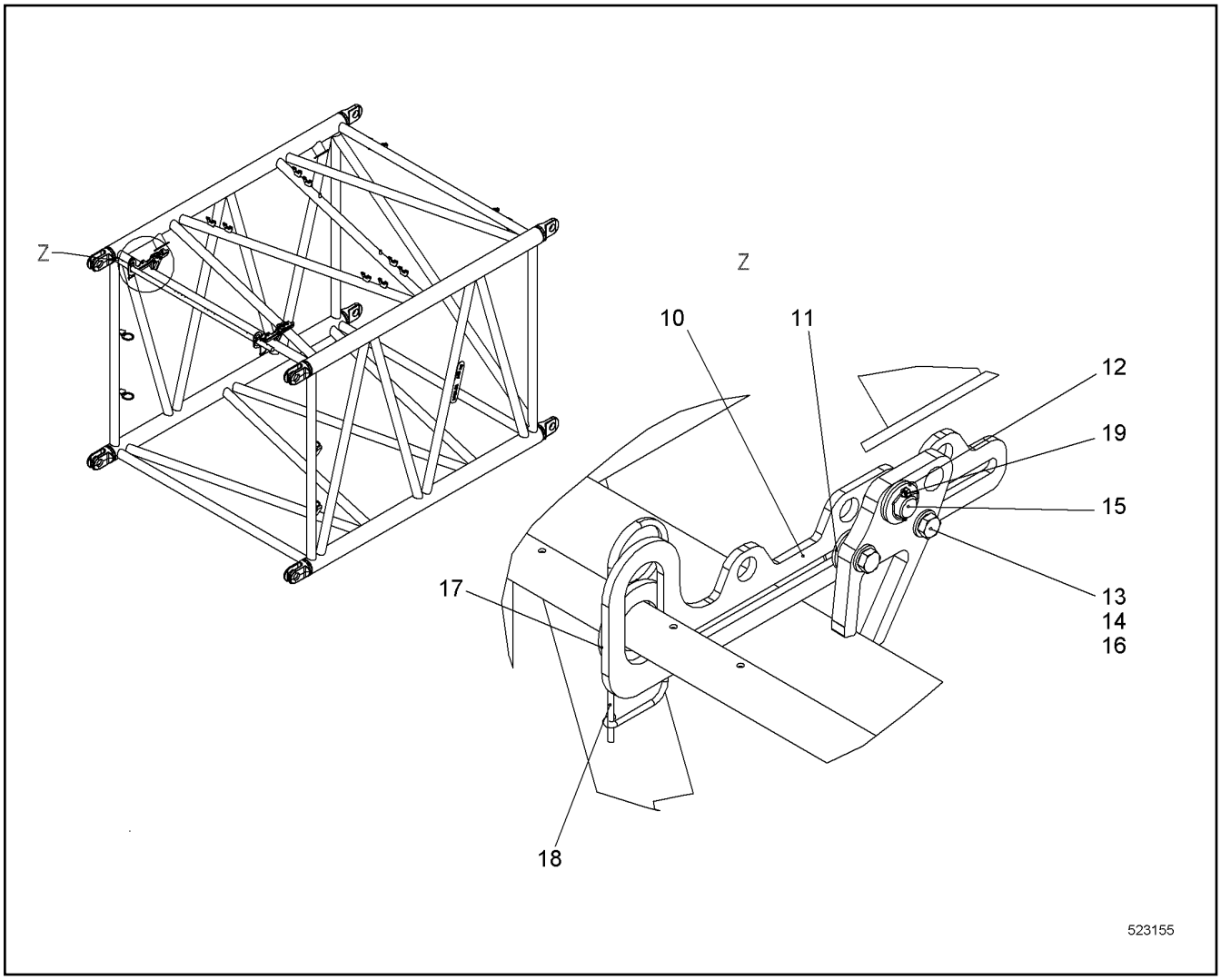

Pos.	Item	Quantity	Description	Bezeichnung	Serie	K
10	11298436	2	HOLDER	HALTER		
11	485568614	8	WASHER DIN 34816 13 PA 6.6	SCHEIBE		
12	10544174	4	WASHER ISO 7089 20	SCHEIBE		
13	10540495	4	HEX NUT ISO 10511 M12 A4	SECHSKANTMUTTER		
14	4901782	4	WASHER ISO 7089 12 A4	SCHEIBE		
15	11949153	2	PIN 30X46 LHRD900-40;10019758	BOLZEN		
16	406512614	4	HEX SCREW ISO 4017 M12X50 A4-70	SECHSKANTSCHRAUBE		
17	420003714	2	WASHER ISO 7089 42	SCHEIBE		
18	433102508	2	RETAINING SPRING 5MM	SICHERUNGSFEDER		
19	485565814	2	SAFETY PLUG W HINGE-LID 4X27	SICHERHEITSKLAPPSTECKER		

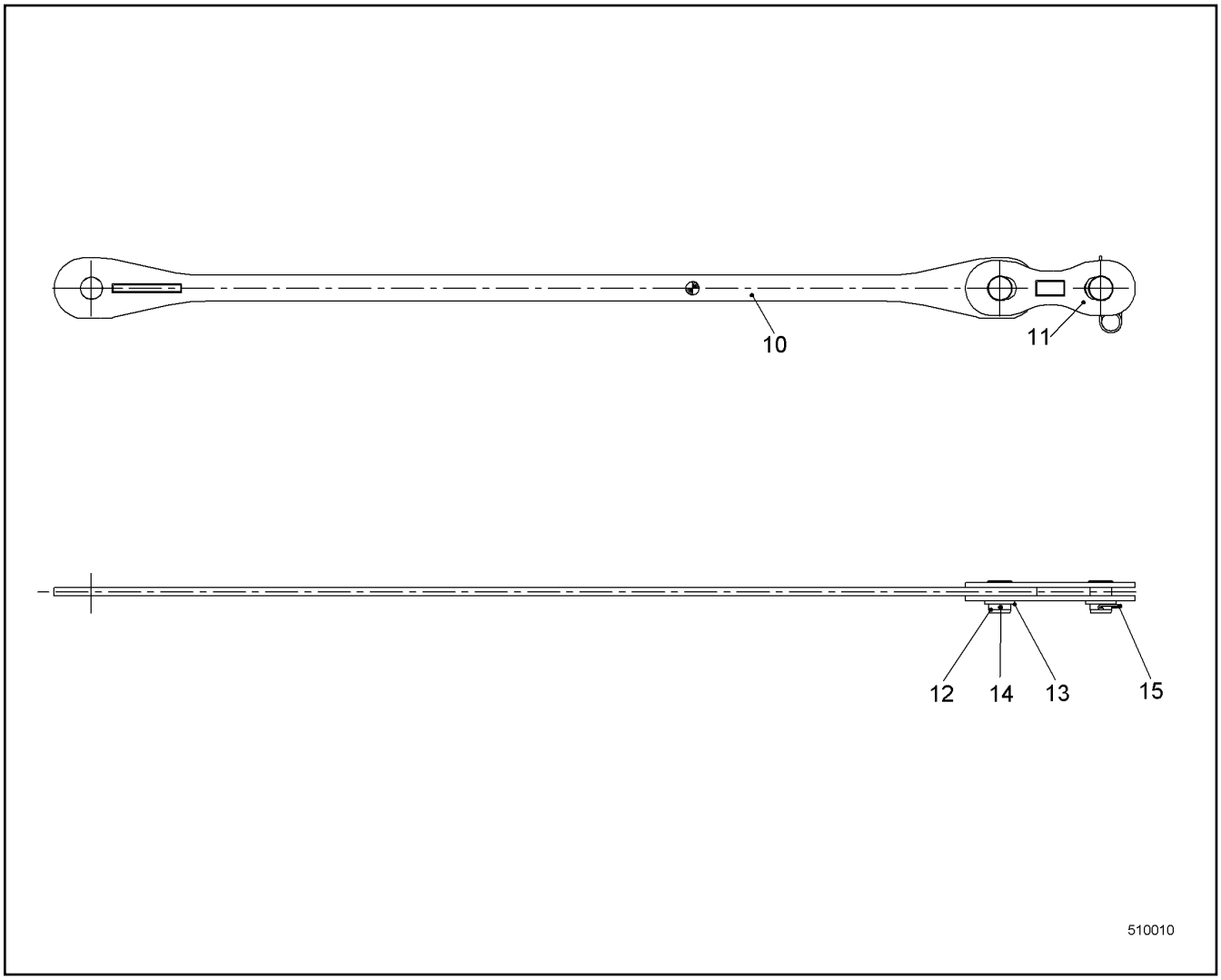

Pos.	Item	Quantity	Description	Bezeichnung	Serie	K
10	10226400	2	ANCHORING ROD	HALTESTANGE		
11	10226402	4	COUPLING LINK	KOPPELLASCHE		
12	959575714	4	PIN 73X95 LHRD900-40;10019758	BOLZEN		
13	421103614	4	WASHER DIN EN 28738 65 ST;	SCHEIBE		
14	433009514	2	SPLIT PIN ISO 1234 8X100 A4	SPLINT		
15	433105008	2	RETAINING SPRING DIN 2194 6MM FS	SICHERUNGSFEDER		

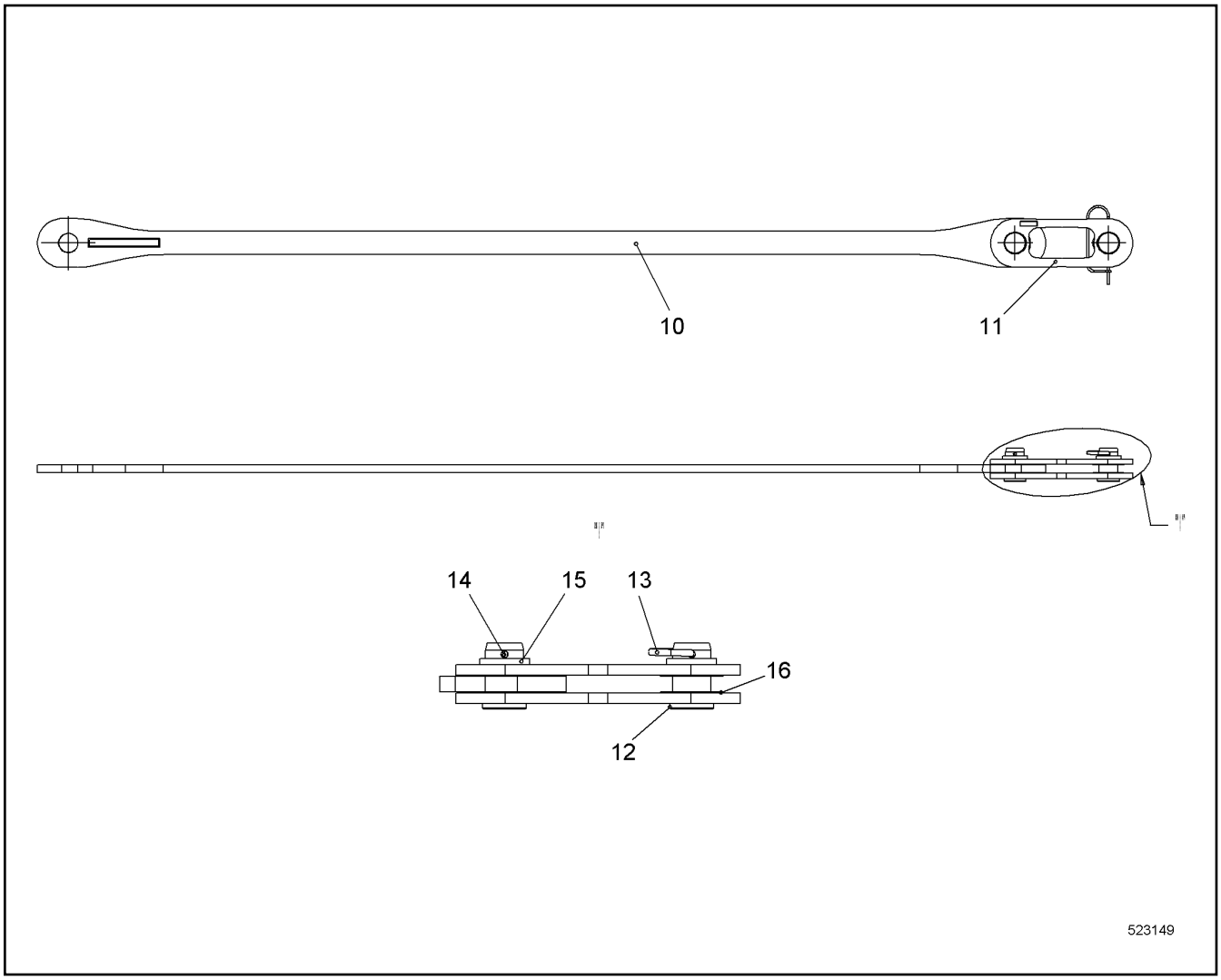

Pos.	Item	Quantity	Description	Bezeichnung	Serie	K
10	949910714	1	ANCHORING ROD	HALTESTANGE		
11	11257246	2	COUPLING LINK	KOPPELLASCHE		
12	949196614	2	PIN 63X95 LHRD900-40;10019758	BOLZEN		
13	433105008	1	RETAINING SPRING DIN 2194 6MM FS	SICHERUNGSFEDER		
14	433010314	1	SPLIT PIN ISO 1234 10X80 A4	SPLINT		
15	421103414	2	WASHER DIN EN 28738 55 ST;	SCHEIBE		
16	949942814	4	WASHER 58/90X2 GUMMI NBR/SBR-65 GRD	SCHEIBE		

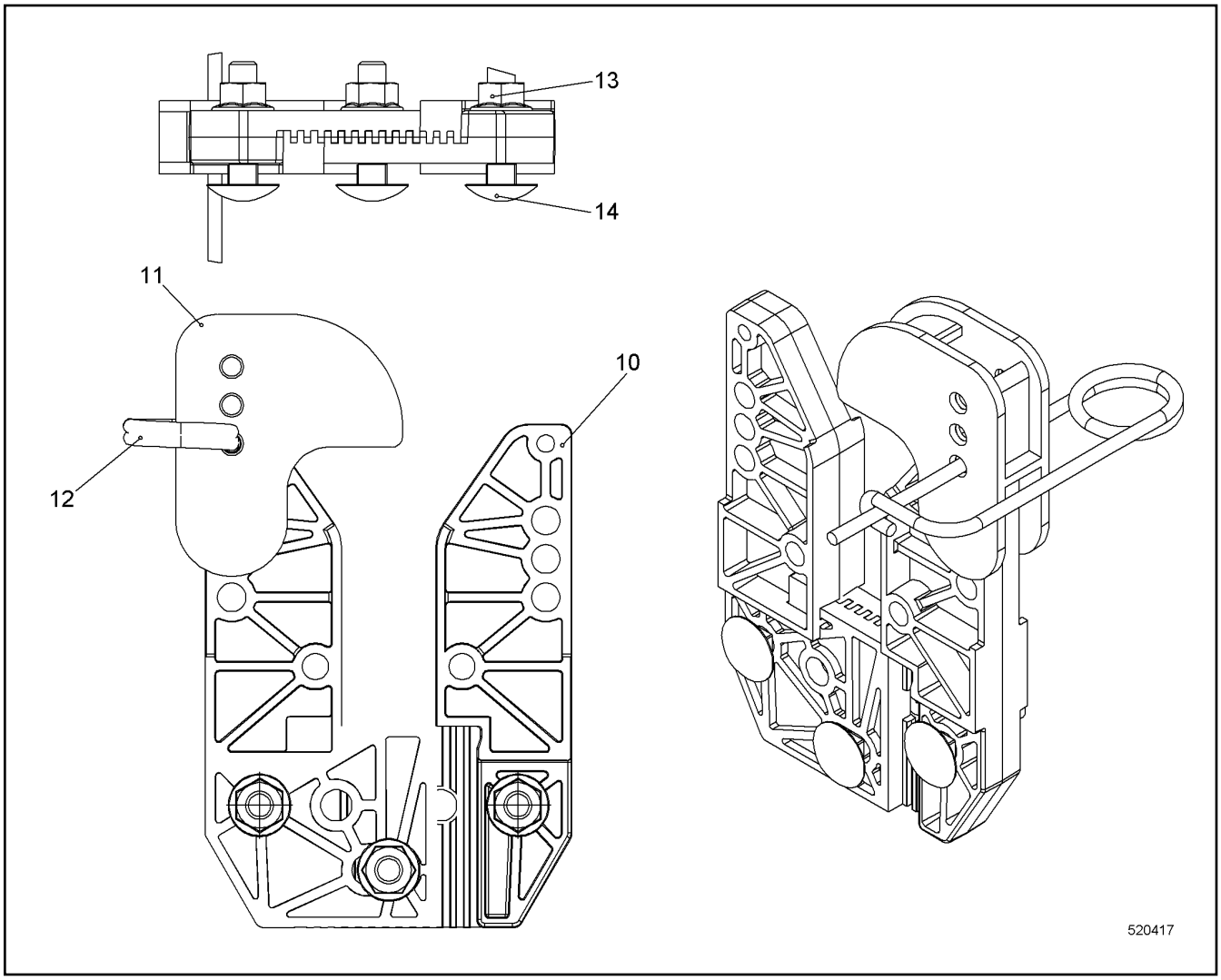

Pos.	Item	Quantity	Description	Bezeichnung	Serie	K
10	11219265	2	SUPPORT	AUFLAGE		
11	11219856	1	CLOSURE CAP	VERSCHLUSSKLAPPE		
12	433101208	1	RETAINING SPRING 4MM	SICHERUNGSFEDER		
13	11314341	3	HEX NUT DIN EN 1663 M8 A4	SECHSKANTMUTTER		
14	11314349	3	CHEESE HEAD SCREW DIN 603 M8X35 A4-70	FLACHRUNDSCHRAUBE		

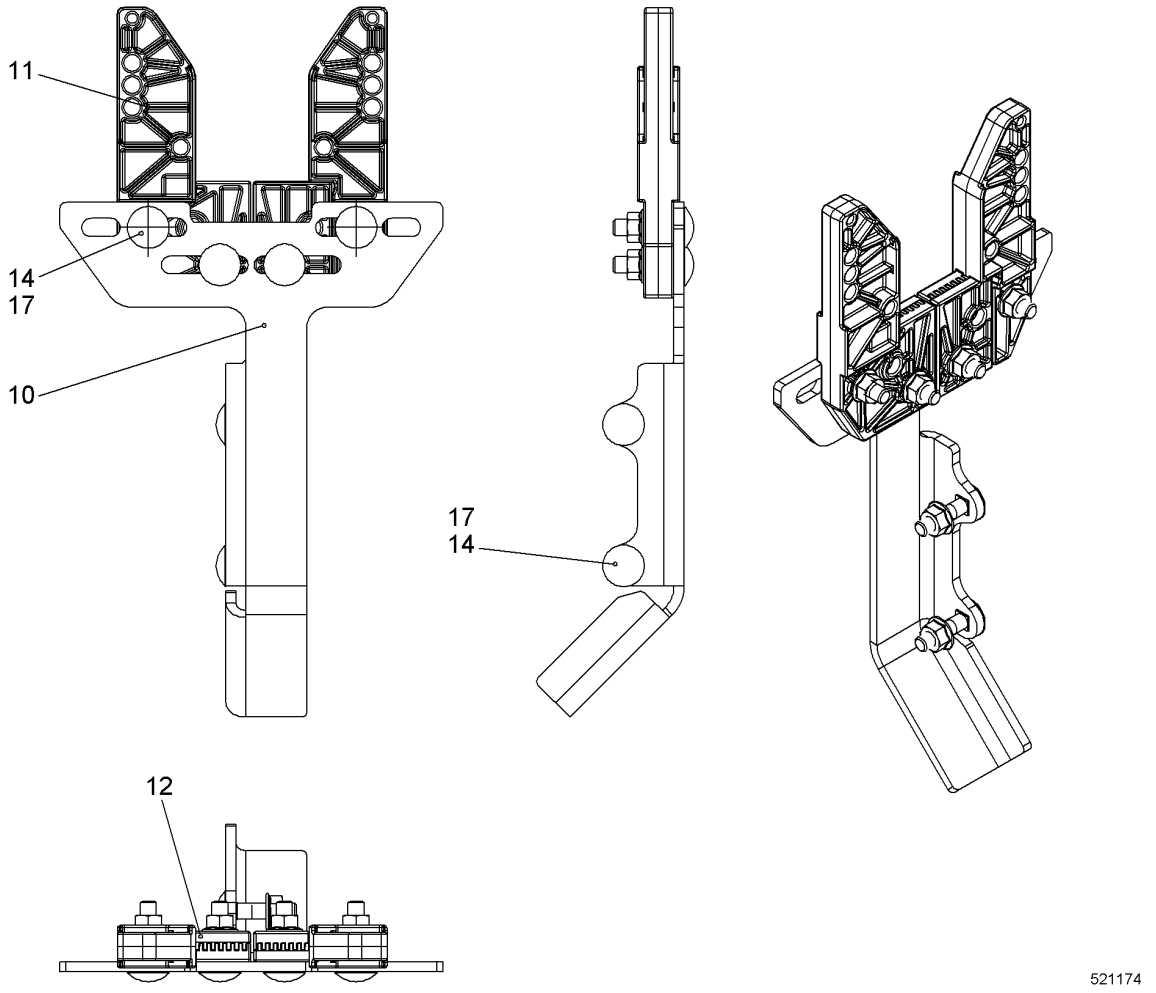

Pos.	Item	Quantity	Description	Bezeichnung	Serie	K
10	11219861	1	FASTENING BRACKET	BEF BUEGEL		
11	11219265	2	SUPPORT	AUFLAGE		
12	11219851	2	SHEET	PLATTE		
14	11314349	6	CHEESE HEAD SCREW DIN 603 M8X35 A4-70	FLACHRUNDSCHRAUBE		
17	11314341	6	HEX NUT DIN EN 1663 M8 A4	SECHSKANTMUTTER		

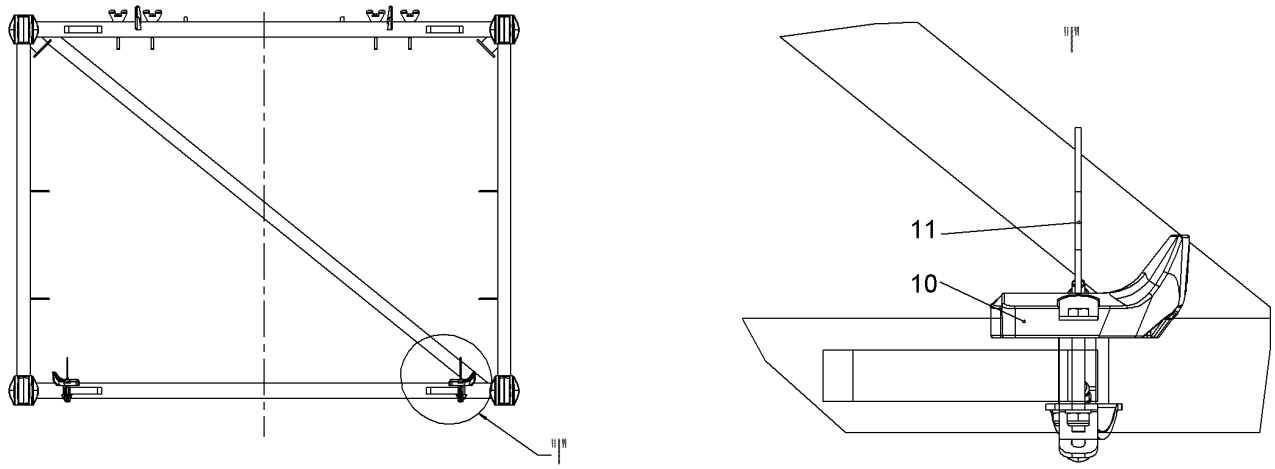

Pos.	Item	Quantity	Description	Bezeichnung	Serie	K
10	992958814	6	SUPPORT ⇨ ❑ 545	AUFLAGE		
11	10350633	2	FASTENER ⇨ ❑ 546	HALTERUNG		

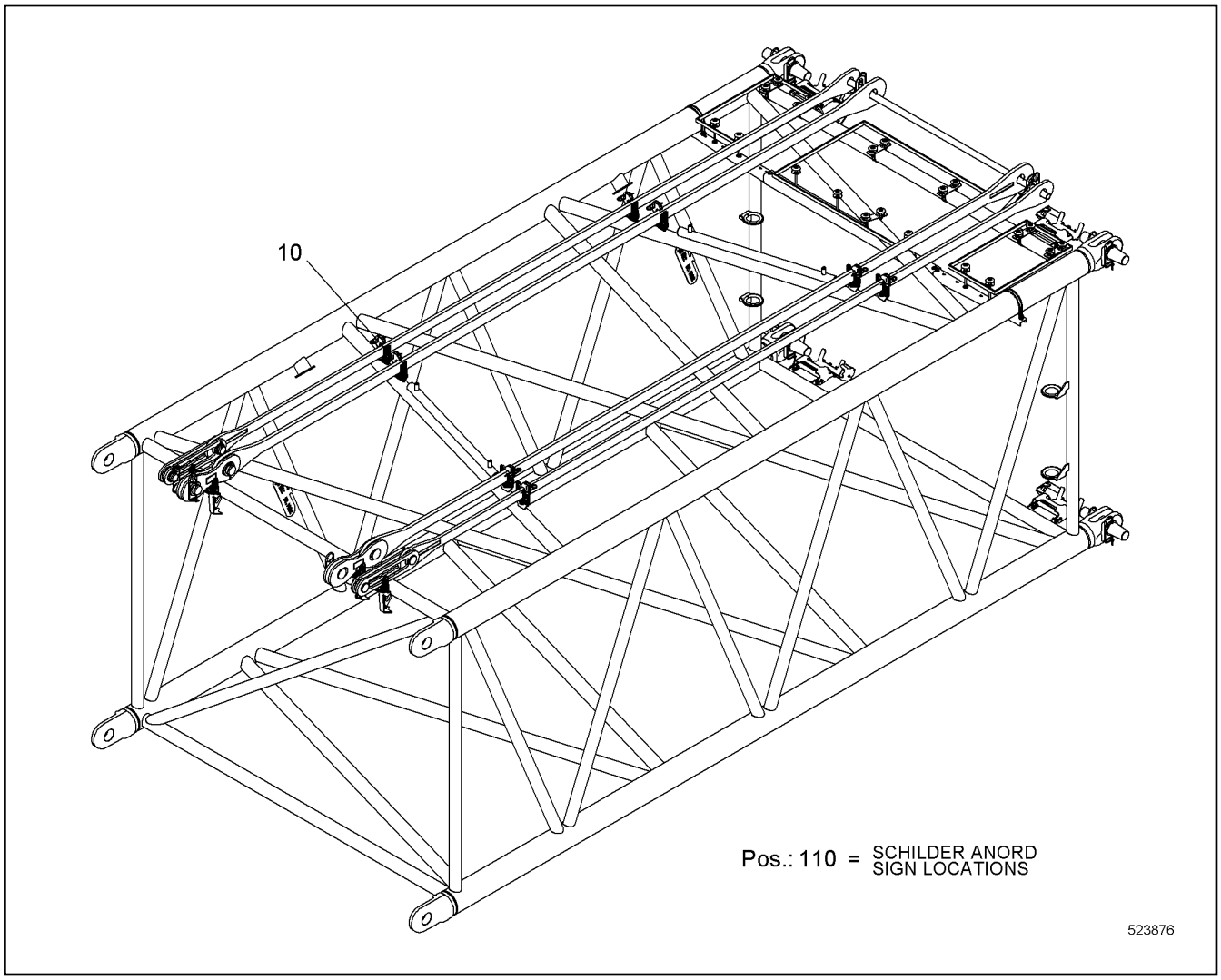

Pos.	Item	Quantity	Description	Bezeichnung	Serie	K
10	11937501	1	ASSEMBLY UNIT ⇨ ❑ 566	MONTAGEEINHEIT		
110	11266901	1	SIGN LOCATIONS	SCHILDER ANORD		

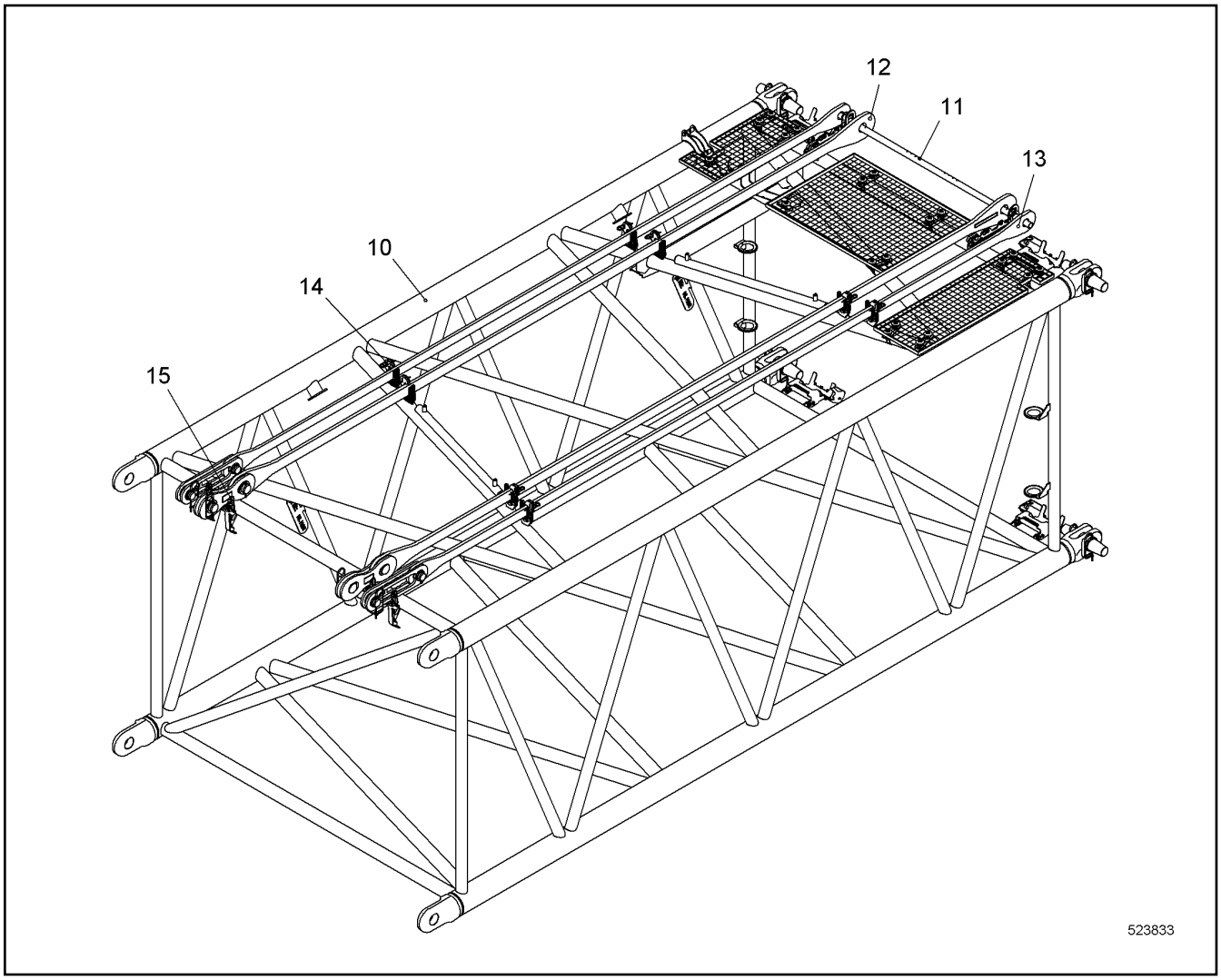

Pos.	Item	Quantity	Description	Bezeichnung	Serie	K
10	11245709	1	BOOM INTERMEDIATE SECTION CPL ⇨ ❑ 567	AL ZWISCHENSTUECK KPL		
11	11940876	1	TRANSPORT LASHING ⇨ ❑ 558	TRANSPORTSICHERUNG		
12	992440514	1	ANCHORING ROD CPL ⇨ ❑ 569	HALTESTANGE KPL		
13	11937020	2	ANCHORING ROD CPL ⇨ ❑ 570	HALTESTANGE KPL		
14	11232907	8	SUPPORT CPL ⇨ ❑ 562	AUFLAGE KPL		
15	11232922	4	SUPPORT CPL ⇨ ❑ 563	AUFLAGE KPL		

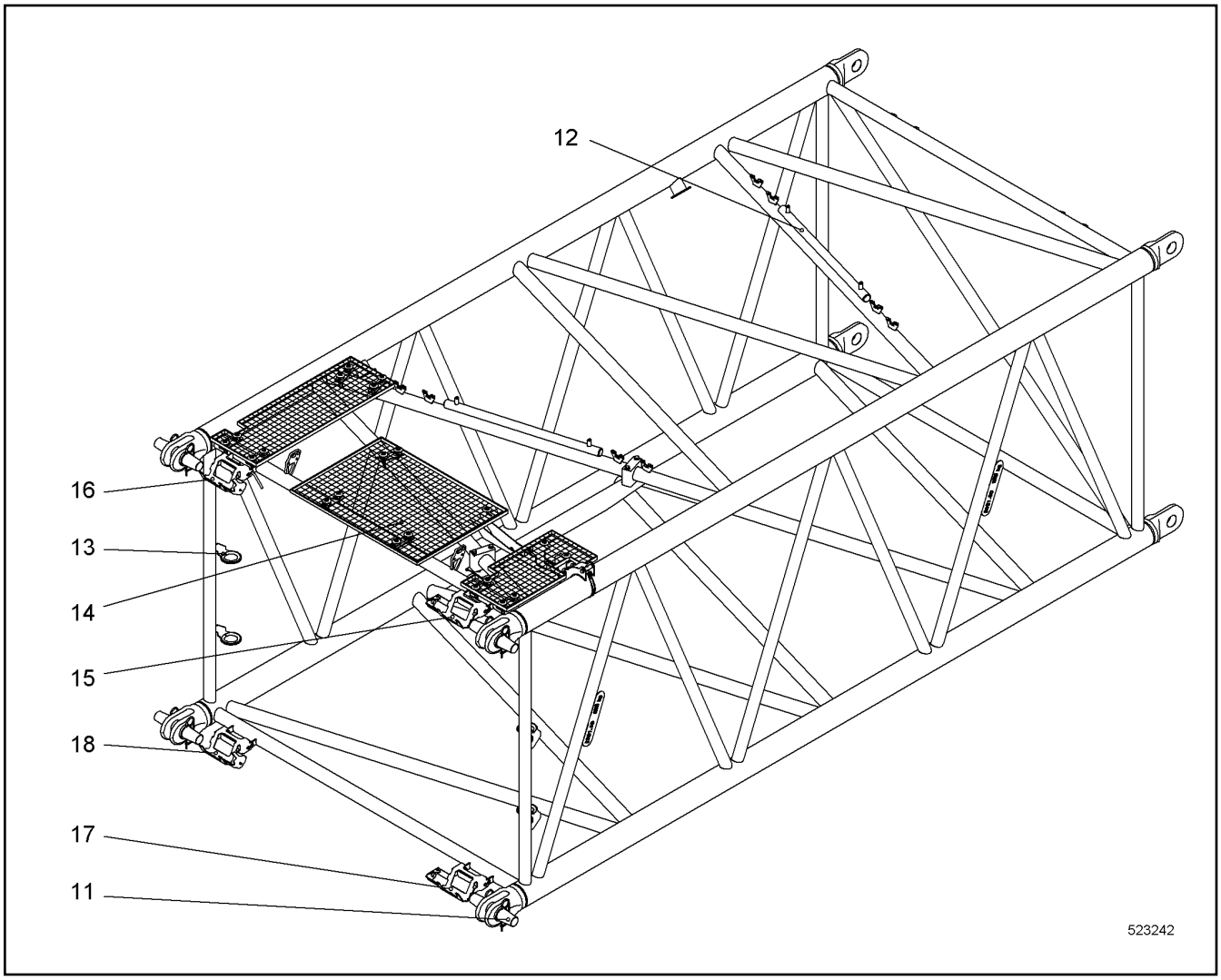

Pos.	Item	Quantity	Description	Bezeichnung	Serie	K
10	11245700	1	BOOM INTERM.SECTION ST.CONST.	AL ZWISCHENSTUECK SCHWK		
11	11287264	4	PIN CPL ⇨ ❑ 550	BOLZEN KPL		
12	11287255	2	ROPE GUARD CPL ⇨ ❑ 551	SEILSCHUTZ KPL		
13	226017802	1.132	EDGE PROTECTION METER WARE	KANTENSCHUTZ METERWARE		
14	11285838	1	BOOM ACCESS ⇨ ❑ 568	AL BEGEHUNG		
15	11283977	1	SUMP PAN CPL ⇨ ❑ 554	AUFFANGWANNE KPL		
16	11283978	1	SUMP PAN CPL ⇨ ❑ 555	AUFFANGWANNE KPL		
17	11283995	1	SUMP PAN CPL ⇨ ❑ 556	AUFFANGWANNE KPL		
18	11283997	1	SUMP PAN CPL ⇨ ❑ 557	AUFFANGWANNE KPL		

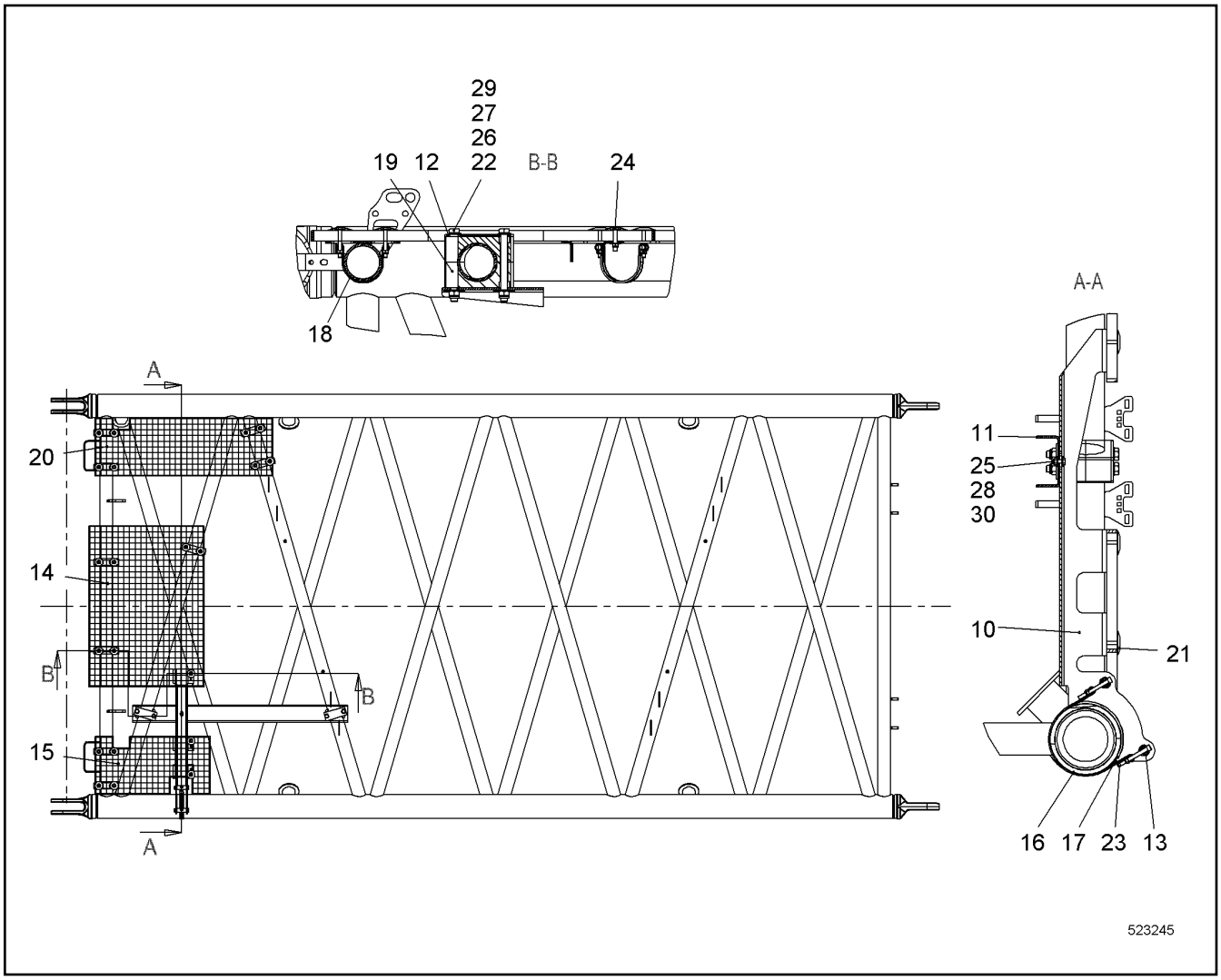

Pos.	Item	Quantity	Description	Bezeichnung	Serie	K
10	11311241	1	PLATE	BLECH		
11	11311336	1	PLATE	BLECH		
12	11310952	2	PLATE	BLECH		
13	11310955	2	AXLE	ACHSE		
14	10530418	1	GRATING	GITTERROST		
15	11311245	1	GRATING	GITTERROST		
16	10531873	1	TIGHTENING STRAP HINGE PIN	GELENKBOLZENSPANNBAND		
17	10352462	0.422	FLEXIBLE EDGE PROTECTOR	KANTENSCHUTZ FLEXIBEL		
18	11283913	9	FIXING CLAMP ⇨ ❑ 553	BEFESTIGUNGSCHELLE		
19	602017114	4	CLAMP-HALF	KLEMMHAELFTE		
20	11311371	1	GRATING	GITTERROST		
21	10098157	3	DISH	TELLER		
22	10543975	4	HEX SCREW ISO 4014 M16X160 10.9	SECHSKANTSCHRAUBE		
23	10539492	2	SOCKET HEAD SCREW ISO 4762 M8X80 A4-7	ZYLINDERSCHRAUBE		
24	10538807	3	HEX SCREW ISO 4017 M8X50 A4-70	SECHSKANTSCHRAUBE		
25	406501414	1	HEX SCREW ISO 4017 M8X25 A4-70	SECHSKANTSCHRAUBE		
26	10544172	4	WASHER ISO 7089 16	SCHEIBE		
27	10544173	4	WASHER ISO 7093-1 16	SCHEIBE		
28	10540510	5	WASHER ISO 7093-1 8 A4	SCHEIBE		
29	10544155	4	HEX NUT DIN 985 M16 10	SECHSKANTMUTTER		
30	10540493	6	HEX NUT ISO 10511 M8 A4	SECHSKANTMUTTER		

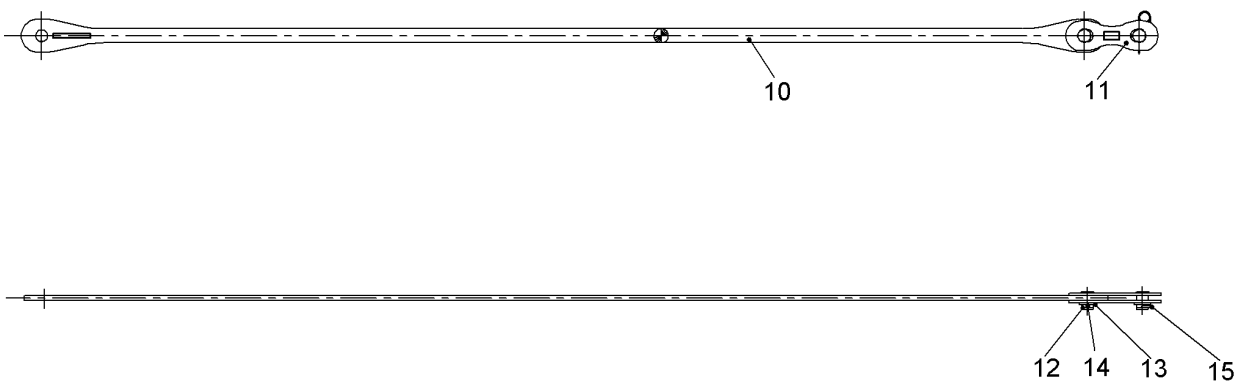

510011

Pos.	Item	Quantity	Description	Bezeichnung	Serie	K
10	10226401	2	ANCHORING ROD	HALTESTANGE		
11	10226402	4	COUPLING LINK	KOPPELLASCHE		
12	959575714	4	PIN 73X95 LHRD900-40;10019758	BOLZEN		
13	421103614	4	WASHER DIN EN 28738 65 ST;	SCHEIBE		
14	433009514	2	SPLIT PIN ISO 1234 8X100 A4	SPLINT		
15	433105008	2	RETAINING SPRING DIN 2194 6MM FS	SICHERUNGSFEDER		

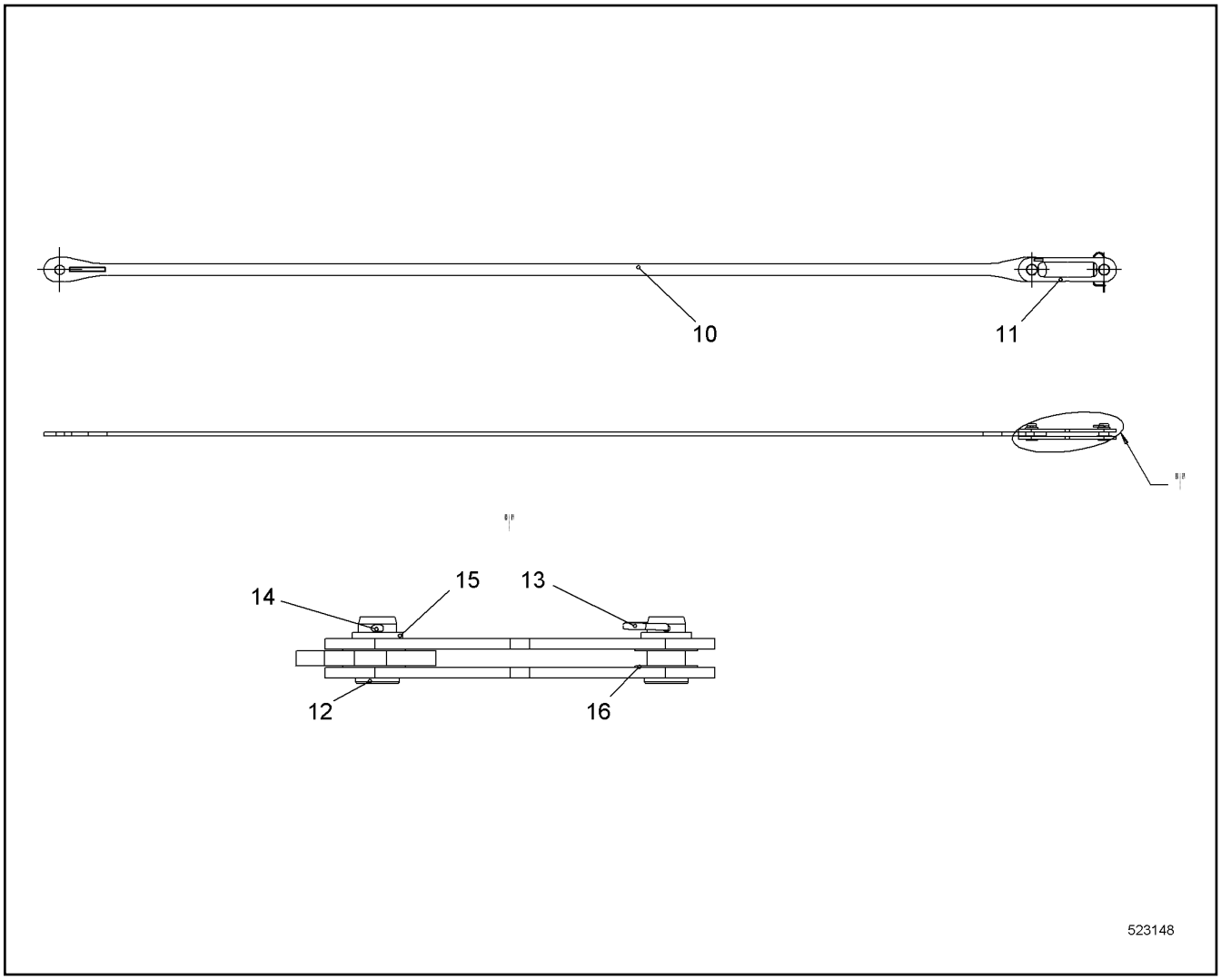

Pos.	Item	Quantity	Description	Bezeichnung	Serie	K
10	949910614	1	ANCHORING ROD	HALTESTANGE		
11	10569443	2	COUPLING LINK	KOPPELLASCHE		
12	949196614	2	PIN 63X95 LHRD900-40;10019758	BOLZEN		
13	433105008	1	RETAINING SPRING DIN 2194 6MM FS	SICHERUNGSFEDER		
14	433010314	1	SPLIT PIN ISO 1234 10X80 A4	SPLINT		
15	421103414	2	WASHER DIN EN 28738 55 ST;	SCHEIBE		
16	949942814	4	WASHER 58/90X2 GUMMI NBR/SBR-65 GRD	SCHEIBE		

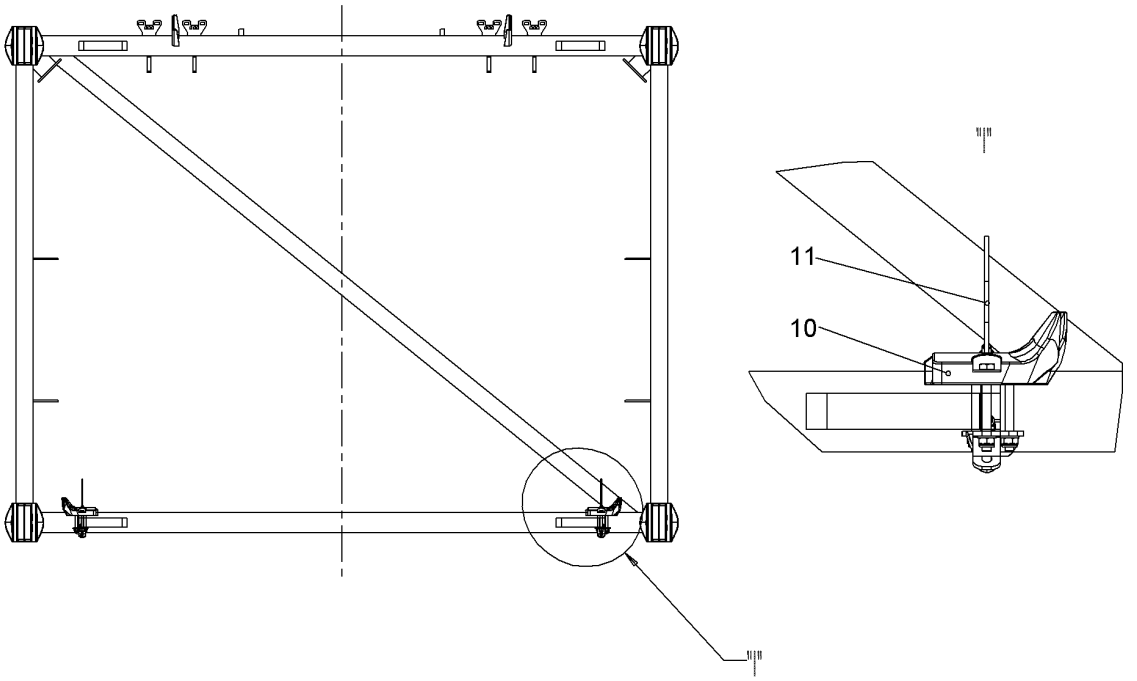

Pos.	Item	Quantity	Description	Bezeichnung	Serie	K
10	992958814	6	SUPPORT ⇨ ❑ 545	AUFLAGE		
11	10350633	2	FASTENER ⇨ ❑ 546	HALTERUNG		

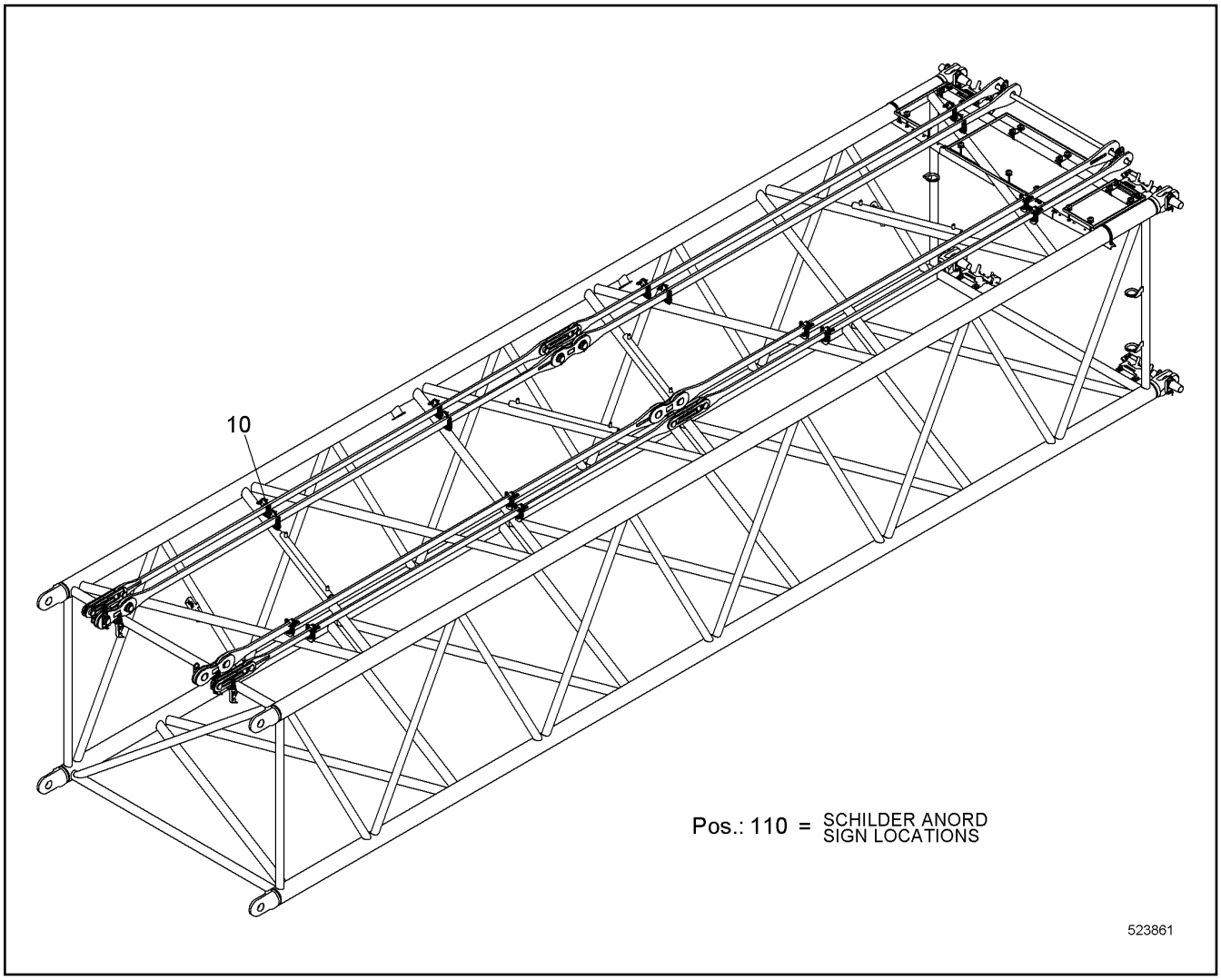

Pos.	Item	Quantity	Description	Bezeichnung	Serie	K
10	11937504	1	ASSEMBLY UNIT ⇨ ❑ 573	MONTAGEEINHEIT		
110	11266901	1	SIGN LOCATIONS	SCHILDER ANORD		

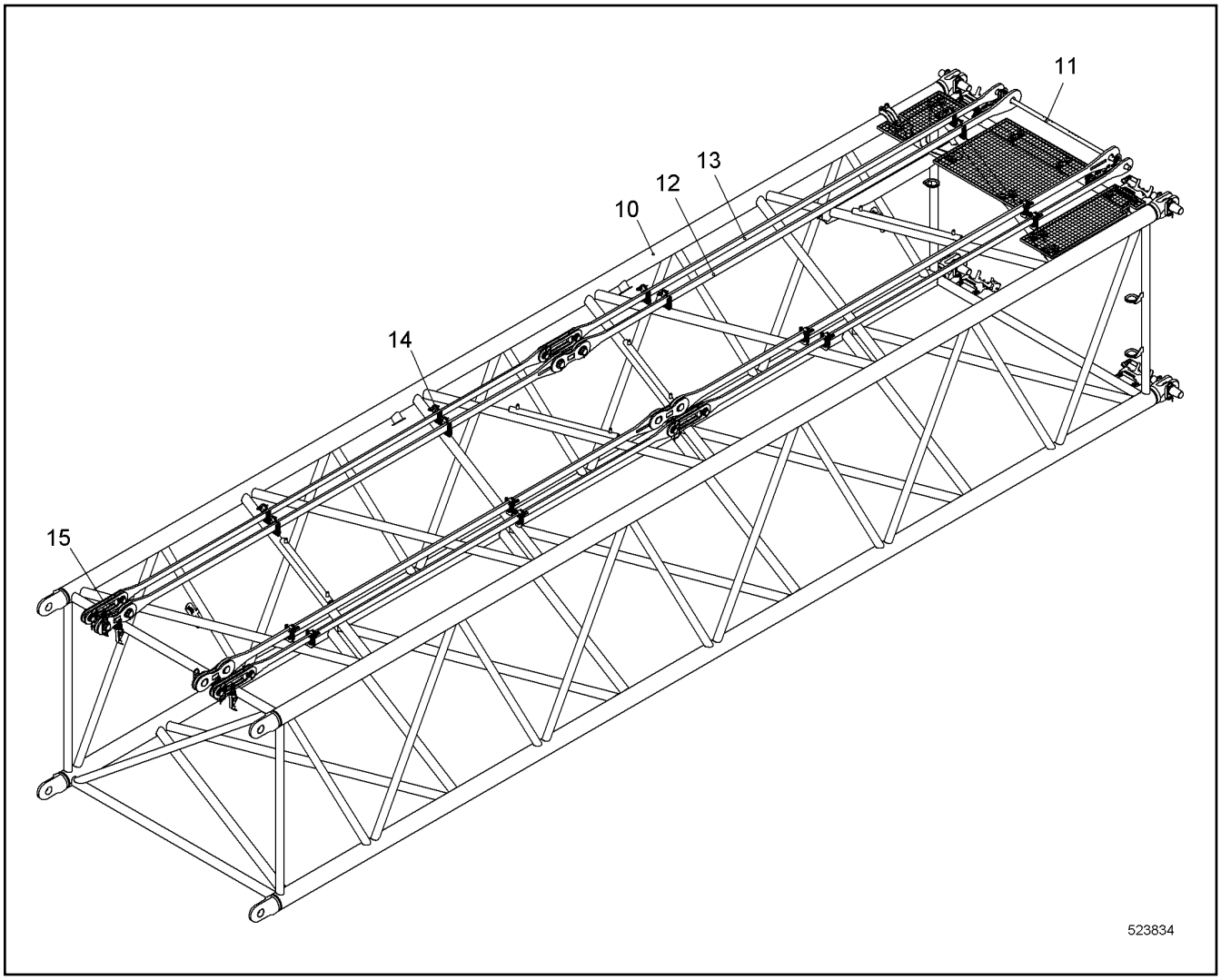

Pos.	Item	Quantity	Description	Bezeichnung	Serie	K
10	11245715	1	BOOM INTERMEDIATE SECTION CPL ⇨ ❑ 574	AL ZWISCHENSTUECK KPL		
11	11940876	1	TRANSPORT LASHING ⇨ ❑ 558	TRANSPORTSICHERUNG		
12	992440614	1	ANCHORING ROD CPL ⇨ ❑ 576	HALTESTANGE KPL		
13	11937020	4	ANCHORING ROD CPL ⇨ ❑ 570	HALTESTANGE KPL		
14	11232907	16	SUPPORT CPL ⇨ ❑ 562	AUFLAGE KPL		
15	11232922	4	SUPPORT CPL ⇨ ❑ 563	AUFLAGE KPL		

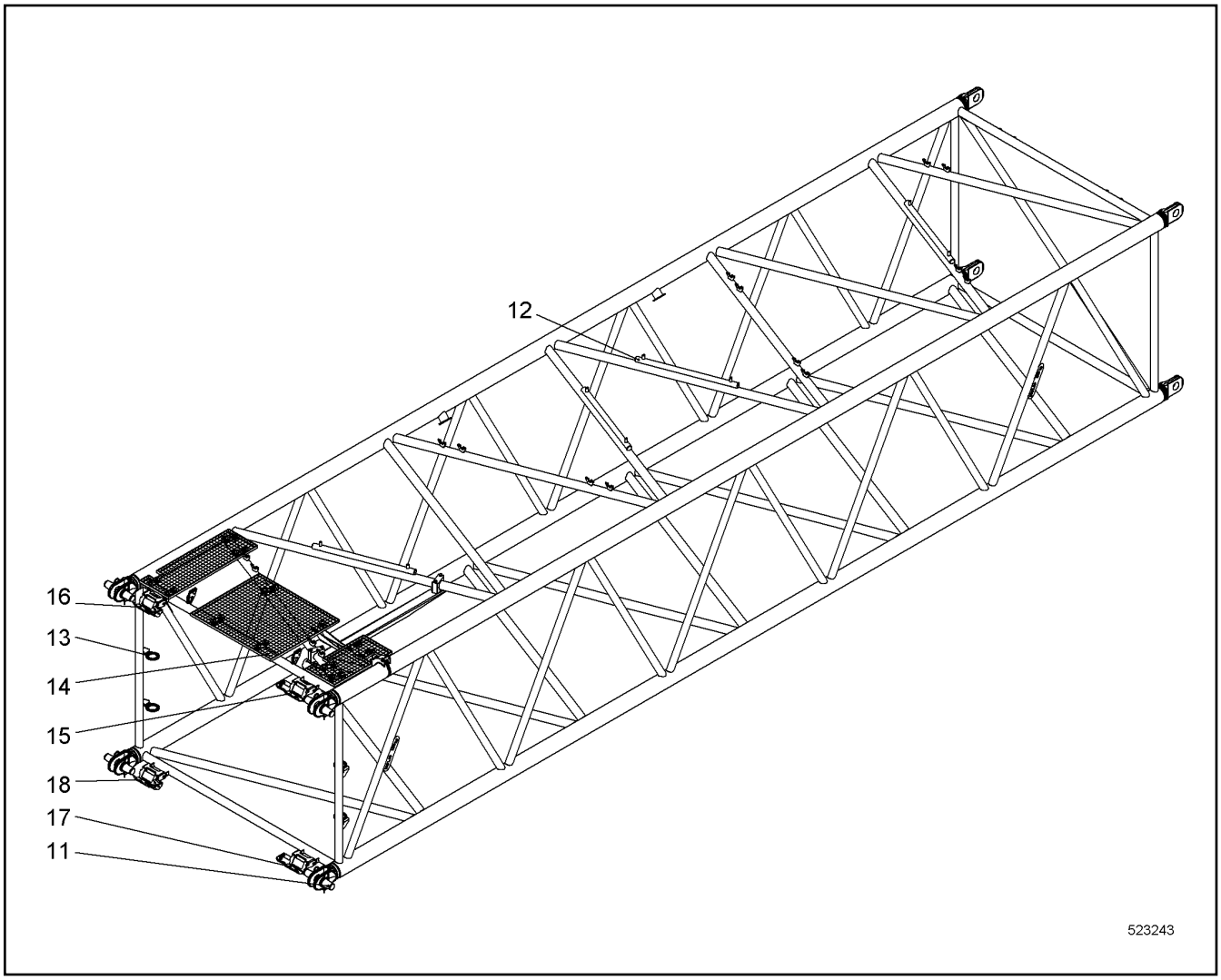

Pos.	Item	Quantity	Description	Bezeichnung	Serie	K
10	11245702	1	BOOM INTERM.SECTION ST.CONST.	AL ZWISCHENSTUECK SCHWK		
11	11287264	4	PIN CPL ⇨ ❑ 550	BOLZEN KPL		
12	11287255	4	ROPE GUARD CPL ⇨ ❑ 551	SEILSCHUTZ KPL		
13	226017802	1.132	EDGE PROTECTION METER WARE	KANTENSCHUTZ METERWARE		
14	11286261	1	BOOM ACCESS ⇨ ❑ 575	AL BEGEHUNG		
15	11283977	1	SUMP PAN CPL ⇨ ❑ 554	AUFFANGWANNE KPL		
16	11283978	1	SUMP PAN CPL ⇨ ❑ 555	AUFFANGWANNE KPL		
17	11283995	1	SUMP PAN CPL ⇨ ❑ 556	AUFFANGWANNE KPL		
18	11283997	1	SUMP PAN CPL ⇨ ❑ 557	AUFFANGWANNE KPL		

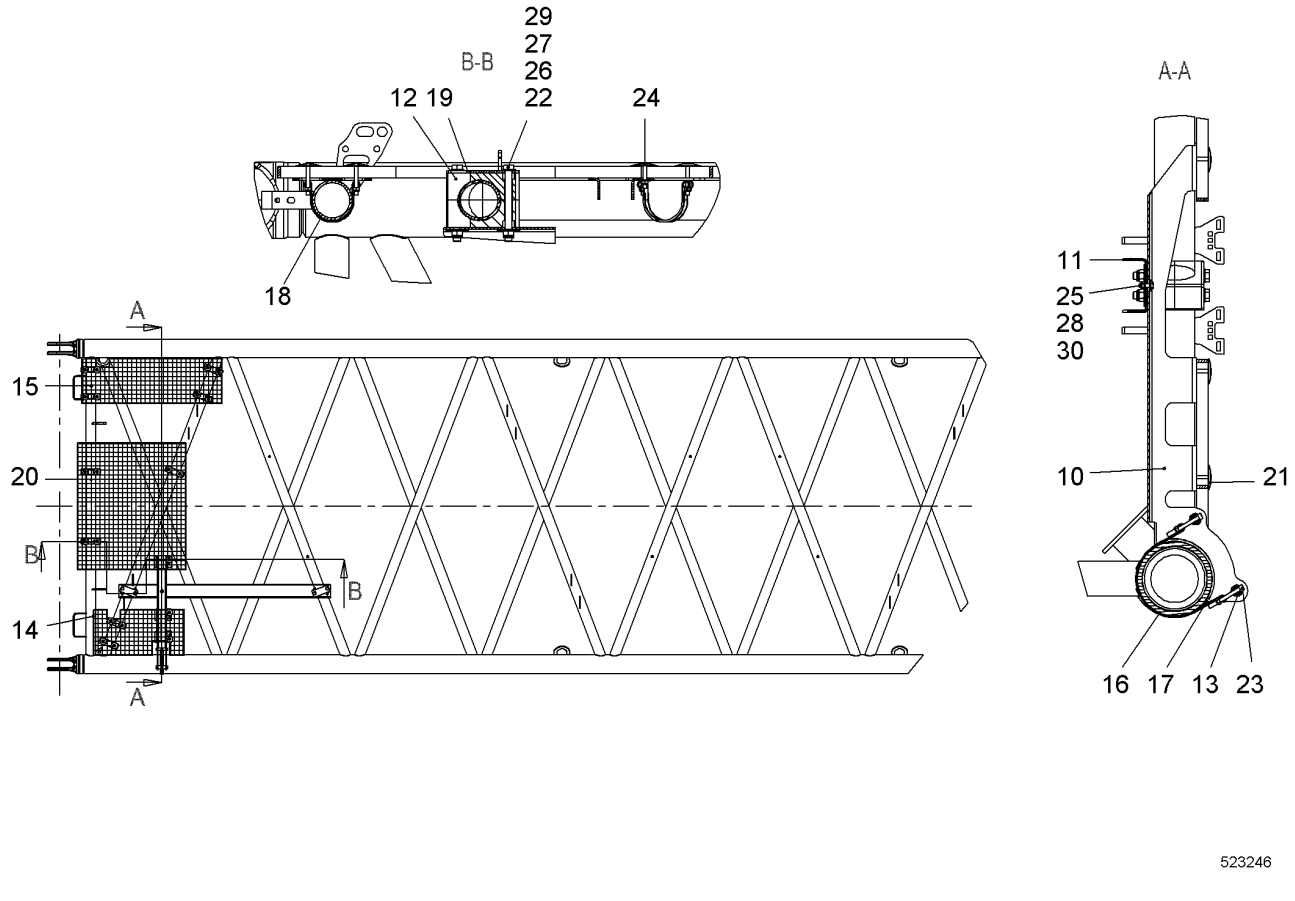

Pos.	Item	Quantity	Description	Bezeichnung	Serie	K
10	11311241	1	PLATE	BLECH		
11	11311393	1	PLATE	BLECH		
12	11310952	2	PLATE	BLECH		
13	11310955	2	AXLE	ACHSE		
14	11311245	1	GRATING	GITTERROST		
15	11311371	1	GRATING	GITTERROST		
16	10531873	1	TIGHTENING STRAP HINGE PIN	GELENKBOLZENSPANNBAND		
17	10352462	0.422	FLEXIBLE EDGE PROTECTOR	KANTENSCHUTZ FLEXIBEL		
18	11283913	9	FIXING CLAMP ⇨ ❑ 553	BEFESTIGUNGSCHELLE		
19	602017114	4	CLAMP-HALF	KLEMMHAELFTE		
20	11311390	1	GRATING	GITTERROST		
21	10098157	3	DISH	TELLER		
22	10543975	4	HEX SCREW ISO 4014 M16X160 10.9	SECHSKANTSCHRAUBE		
23	10539492	2	SOCKET HEAD SCREW ISO 4762 M8X80 A4-7	ZYLINDERSCHRAUBE		
24	10538807	3	HEX SCREW ISO 4017 M8X50 A4-70	SECHSKANTSCHRAUBE		
25	406501414	1	HEX SCREW ISO 4017 M8X25 A4-70	SECHSKANTSCHRAUBE		
26	10544172	4	WASHER ISO 7089 16	SCHEIBE		
27	10544173	4	WASHER ISO 7093-1 16	SCHEIBE		
28	10540510	5	WASHER ISO 7093-1 8 A4	SCHEIBE		
29	10544155	4	HEX NUT DIN 985 M16 10	SECHSKANTMUTTER		
30	10540493	6	HEX NUT ISO 10511 M8 A4	SECHSKANTMUTTER		

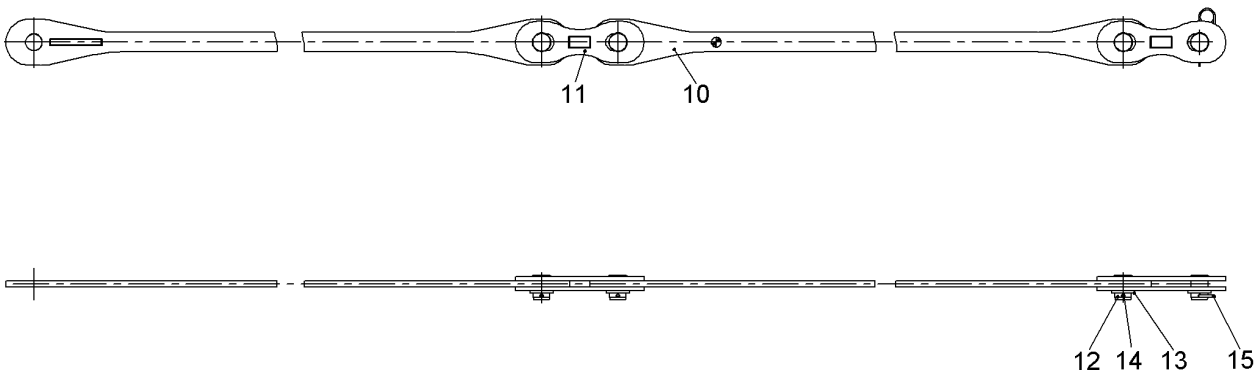

510012

Pos.	Item	Quantity	Description	Bezeichnung	Serie	K
10	10226401	4	ANCHORING ROD	HALTESTANGE		
11	10226402	8	COUPLING LINK	KOPPELLASCHE		
12	959575714	8	PIN 73X95 LHRD900-40;10019758	BOLZEN		
13	421103614	8	WASHER DIN EN 28738 65 ST;	SCHEIBE		
14	433009514	6	SPLIT PIN ISO 1234 8X100 A4	SPLINT		
15	433105008	2	RETAINING SPRING DIN 2194 6MM FS	SICHERUNGSFEDER		

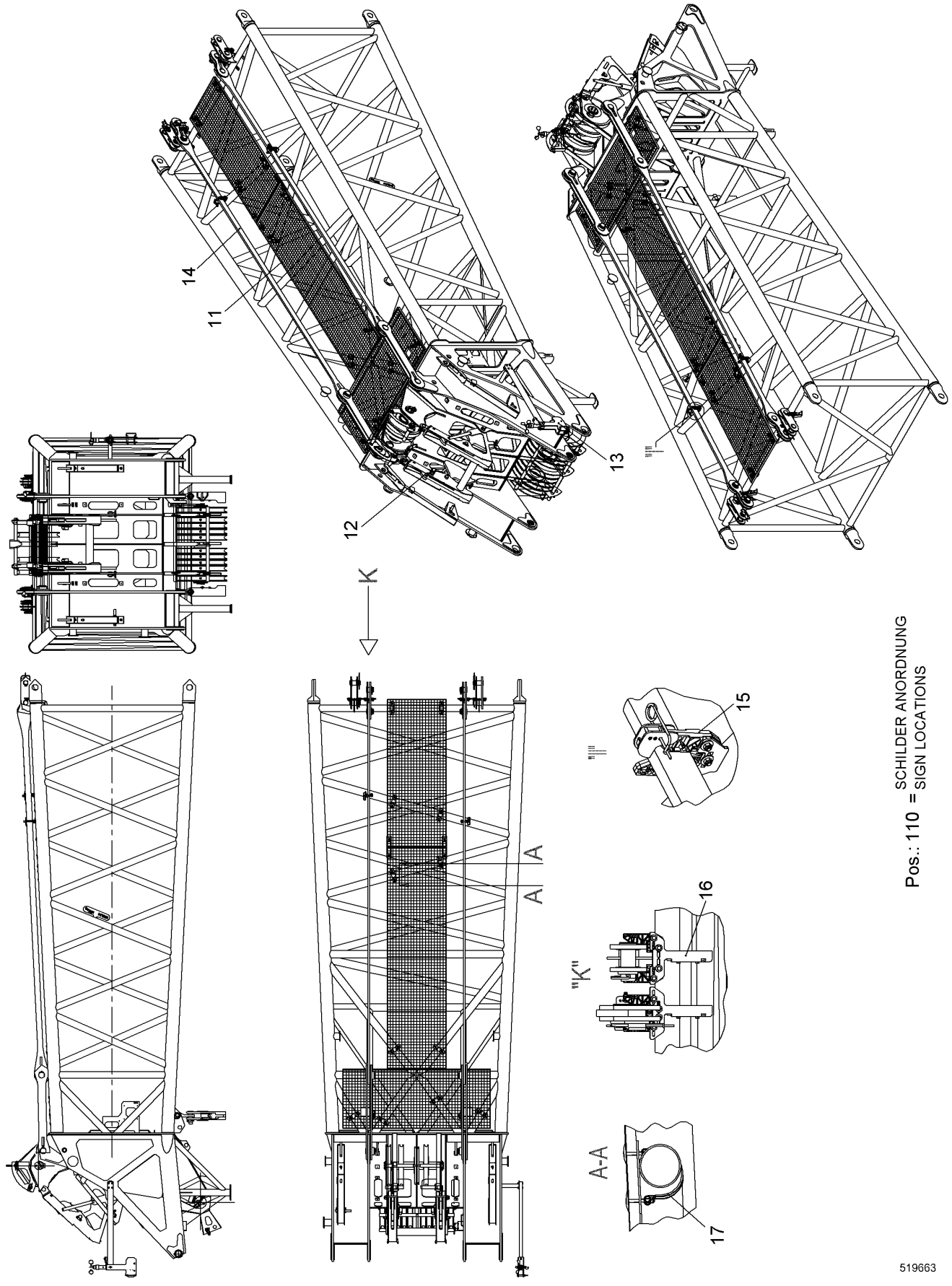

Pos.: 110 = SCHILDER ANORDNUNG / SIGN LOCATIONS

24.5.2017 519663	**138376_ETK_001**	577 (1/2)
LIEBHERR	**BOOM HEAD CPL** **AL KOPF KPL**	**11 24 132 4**

Pos.	Item	Quantity	Description	Bezeichnung	Serie	K
3	10531413	1	BOOM HEAD EL ⇨ ❑ 579	AL KOPF EL		
10	11241323	1	BOOM HEAD ST.CONST. CPL	AL KOPF SCHWK KPL		
11	11286299	1	MOUNTING PARTS ⇨ ❑ 580	MONTAGETEILE		
12	11286105	1	RETAINING DEVICE CPL ⇨ ❑ 582	ARRETIERUNG KPL		
13	990646114	1	ANEMOMETER CPL ⇨ ❑ 583	WINDMESSER KPL		
14	992459414	1	ANCHORING ROD CPL ⇨ ❑ 588	HALTESTANGE KPL		
15	11232907	2	SUPPORT CPL ⇨ ❑ 562	AUFLAGE KPL		
16	11232922	4	SUPPORT CPL ⇨ ❑ 563	AUFLAGE KPL		
17	11283913	12	FIXING CLAMP ⇨ ❑ 553	BEFESTIGUNGSCHELLE		
110	11269727	1	SIGN LOCATIONS	SCHILDER ANORD		

OHNE BILD
WITHOUT ILLUSTRATION
SANS PLANCHE
SIN FIG.
SEM ILUSTRAÇÃO
БЕЗ ИЗОБРАЖЕНИЯ

600000

Pos.	Item	Quantity	Description	Bezeichnung	Serie	K
10	11286324	1	ANGLE TRANSMITTER	WINKELGEBER		
11	693067614	2	PROXIMITY SWITCH	NAEHERUNGSSCHALTER		
21	10575599	1	CABLE LOOM	KABELSATZ		

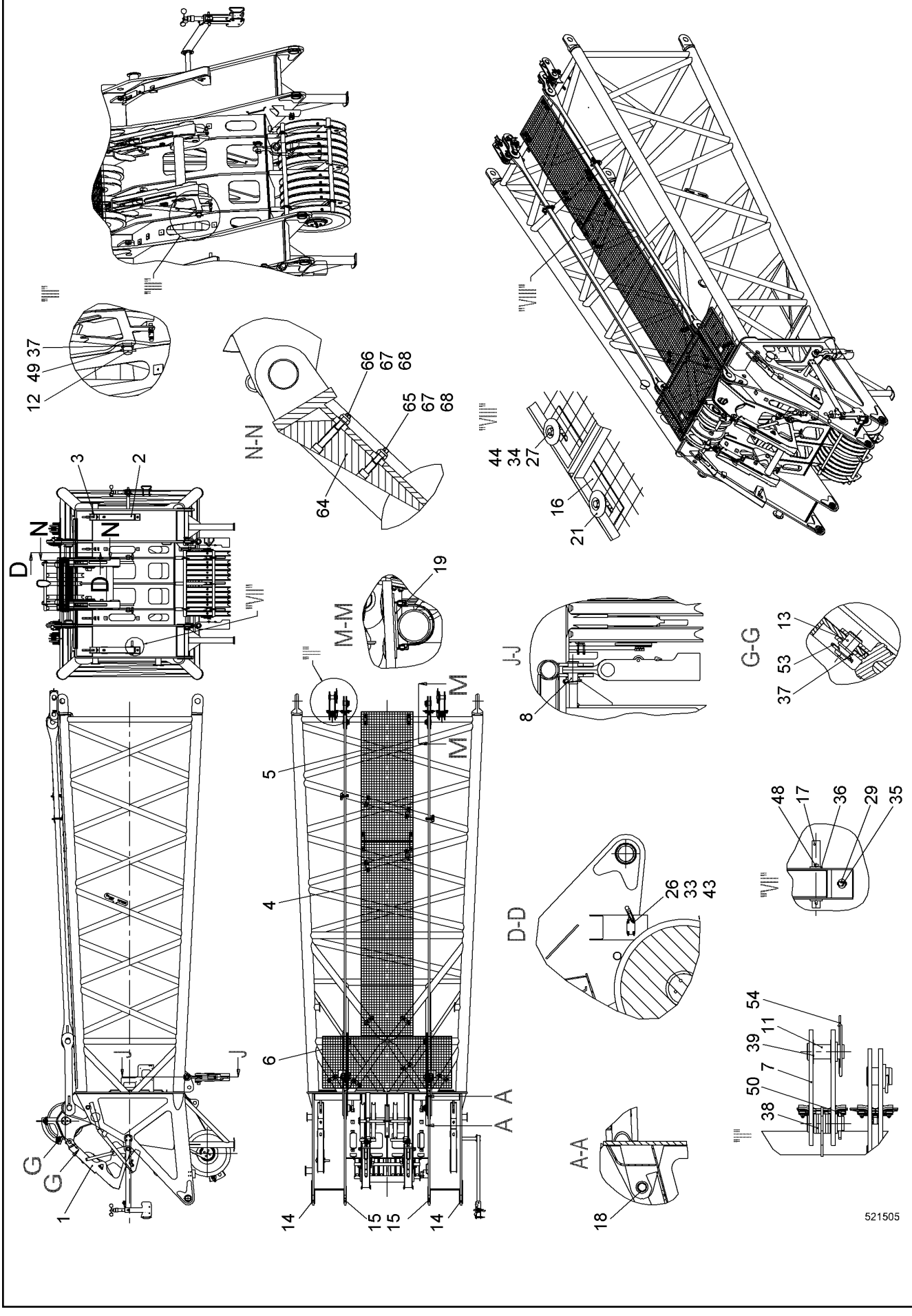

24.5.2017 521505	**138376_ETK_001**	❑ 580 (1/2)
LIEBHERR	**MOUNTING PARTS** **MONTAGETEILE**	**11 28 629 9**

Pos.	Item	Quantity	Description	Bezeichnung	Serie	K
1	10537682	1	GUIDING RAIL ST.CONST.	FUEHRUNGSSCHIENE SCHWK		
2	919956014	2	GUIDING RAIL ST.CONST.	FUEHRUNGSSCHIENE SCHWK		
3	919956114	2	GUIDING RAIL ST.CONST.	FUEHRUNGSSCHIENE SCHWK		
4	790512414	1	GRATING	GITTERROST		
5	790512314	1	GRATING	GITTERROST		
6	11263492	1	GRATING	GITTERROST		
7	949911014	4	COUPLING LINK	KOPPELLASCHE		
8	910353714	2	BOLT CONNECTION	BOLZENVERBINDUNG		
11	959643514	4	PIN 63X140 LHRD900-40;10019758	BOLZEN		
12	10550993	2	PIN 53X67 LHRD900-40;10019758	BOLZEN		
13	949946714	2	PIN 53X82 LHRD900-40;10019758	BOLZEN		
14	385037314	2	BUSHING 90/110X50 E470;EN 10294-1	BUCHSE		
15	954398803	2	BUSHING 100/80X40 E470;EN 10294-1	BUCHSE		
16	970854303	2	WP	WP		
17	957336914	1	TUBE	ROHR		
18	746911614	4	SPHERICAL BEARING	GELENKLAGER		
19	11231673	2	SHEET	PLATTE		
21	10098157	4	DISH	TELLER		
26	10539454	4	SOCKET HEAD SCREW ISO 4762 M5X45 A4-7	ZYLINDERSCHRAUBE		
27	406532914	4	HEX SCREW ISO 4017 M8X40 A4-70	SECHSKANTSCHRAUBE		
29	406527314	8	HEX SCREW ISO 4017 M10X16 A4-70	SECHSKANTSCHRAUBE		
33	420005214	8	WASHER ISO 7089 5 A4	SCHEIBE		
34	10540510	4	WASHER ISO 7093-1 8 A4	SCHEIBE		
35	10540511	8	WASHER ISO 7093-1 10 A4	SCHEIBE		
36	421102214	2	WASHER DIN EN 28738 26 ST;	SCHEIBE		
37	421103214	4	WASHER DIN EN 28738 45 ST;	SCHEIBE		
38	421103414	16	WASHER DIN EN 28738 55 ST;	SCHEIBE		
39	949942814	4	WASHER 58/90X2 GUMMI NBR/SBR-65 GRD	SCHEIBE		
43	10540484	4	HEX NUT ISO 10511 M5 A4	SECHSKANTMUTTER		
44	10540493	4	HEX NUT ISO 10511 M8 A4	SECHSKANTMUTTER		
48	433008814	2	SPLIT PIN ISO 1234 8X50 A4	SPLINT		
49	433009114	2	SPLIT PIN ISO 1234 8X63 A4	SPLINT		
50	433010314	2	SPLIT PIN ISO 1234 10X80 A4	SPLINT		
53	433101208	2	RETAINING SPRING 4MM	SICHERUNGSFEDER		
54	433105008	2	RETAINING SPRING DIN 2194 6MM FS	SICHERUNGSFEDER		
64	11913226	4	SHEET	PLATTE		
65	4001622	4	SOCKET HEAD SCREW ISO 4762 M10X55 10.9	ZYLINDERSCHRAUBE		
66	4900980	4	SOCKET HEAD SCREW ISO 4762 M10X75 10.9	ZYLINDERSCHRAUBE		
67	10540494	8	HEX NUT ISO 10511 M10 A4	SECHSKANTMUTTER		
68	420001114	8	WASHER ISO 7089 10 A4	SCHEIBE		

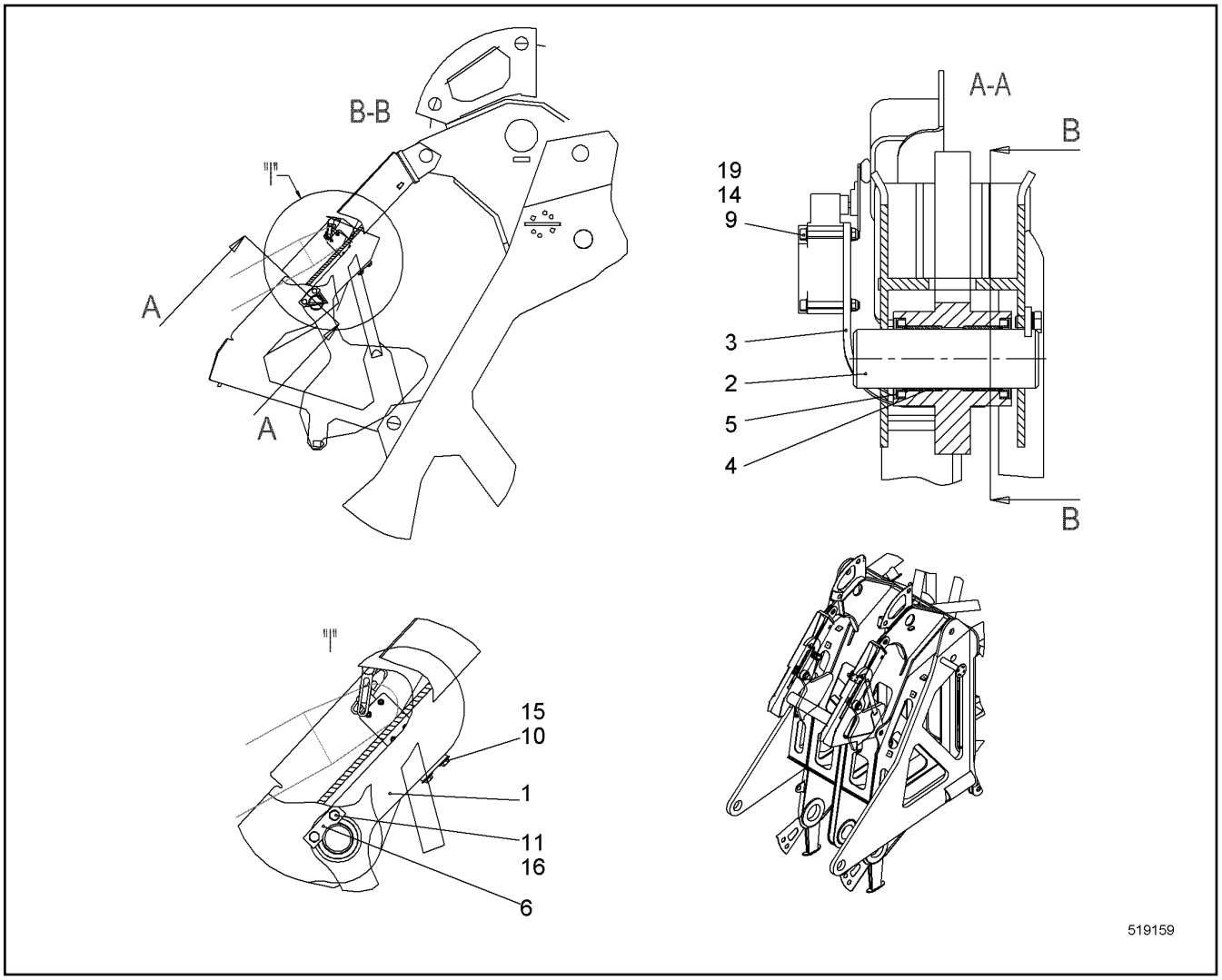

Pos.	Item	Quantity	Description	Bezeichnung	Serie	K
1	919617914	2	LOCKING DEVICE	ARRETIERUNG		
2	956847814	2	PIN 50X157 LHRD900-40;10019758	BOLZEN		
3	956033214	2	WP	WP		
4	708014114	4	BUSHING 50/55X30	BUCHSE		
5	710004514	4	SEALING RING	DICHTRING		
6	703003014	2	AXLE HOLDER	ACHSHALTER		
9	10539454	8	SOCKET HEAD SCREW ISO 4762 M5X45 A4-7	ZYLINDERSCHRAUBE		
10	406501614	4	HEX SCREW ISO 4017 M8X12 A4-70	SECHSKANTSCHRAUBE		
11	406527314	4	HEX SCREW ISO 4017 M10X16 A4-70	SECHSKANTSCHRAUBE		
14	420005214	16	WASHER ISO 7089 5 A4	SCHEIBE		
15	10540510	4	WASHER ISO 7093-1 8 A4	SCHEIBE		
16	10536579	4	WEDGE LOCK WASHER M10 254 SMO;EN 10	KEILSICHERUNGSSCHEIBE		
19	10540484	8	HEX NUT ISO 10511 M5 A4	SECHSKANTMUTTER		

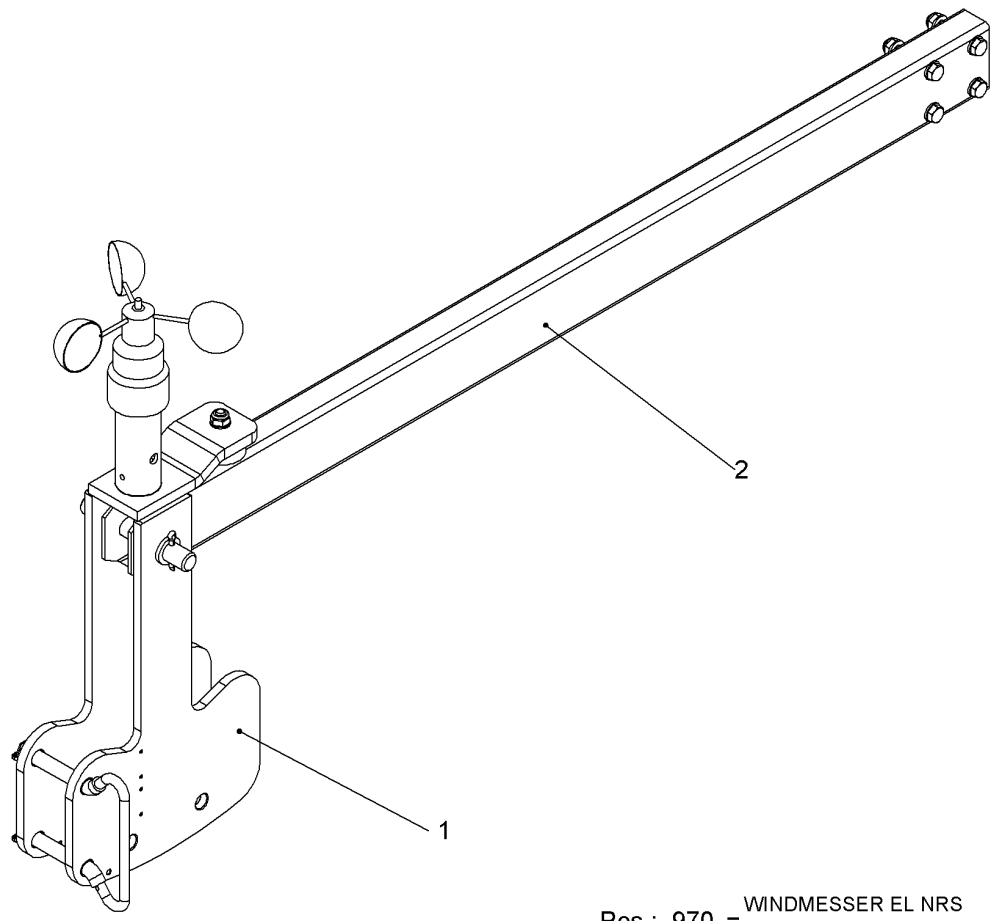

Pos.	Item	Quantity	Description	Bezeichnung	Serie	K
1	10598633	1	PENDULUM CPL ⇨ ❑ 584	PENDEL KPL		
2	11283576	1	MOUNTING PARTS ⇨ ❑ 585	MONTAGETEILE		
970	970720403	1	ANEMOMETER EL RFK ⇨ ❑ 586	WINDMESSER EL NRS		

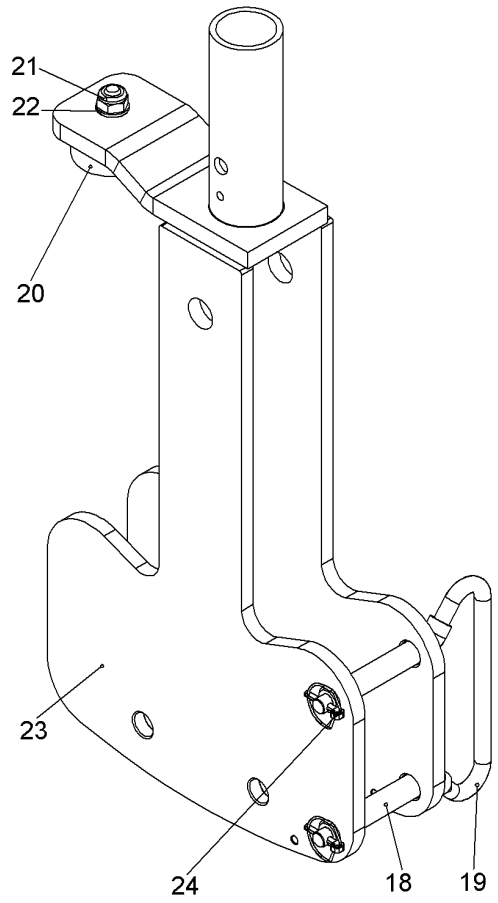

Pos.	Item	Quantity	Description	Bezeichnung	Serie	K
18	603018114	0.2	HEATSHRINK SLEEVING	SCHRUMPFSCHLAUCH		
19	10592334	1	BRACKET	BUEGEL		
20	726613014	1	RUBBER MOUNT	LAGER GUMMI		
21	10540494	1	HEX NUT ISO 10511 M10 A4	SECHSKANTMUTTER		
22	420001114	1	WASHER ISO 7089 10 A4	SCHEIBE		
23	990627014	1	PENDULUM	PENDEL		
24	485565814	2	SAFETY PLUG W HINGE-LID 4X27	SICHERHEITSKLAPPSTECKER		
25	773400308	0.9	STEEL WIRE ROPE	STAHLDRAHTSEIL		
26	773920008	6	FERRULE	PRESSKLEMME		

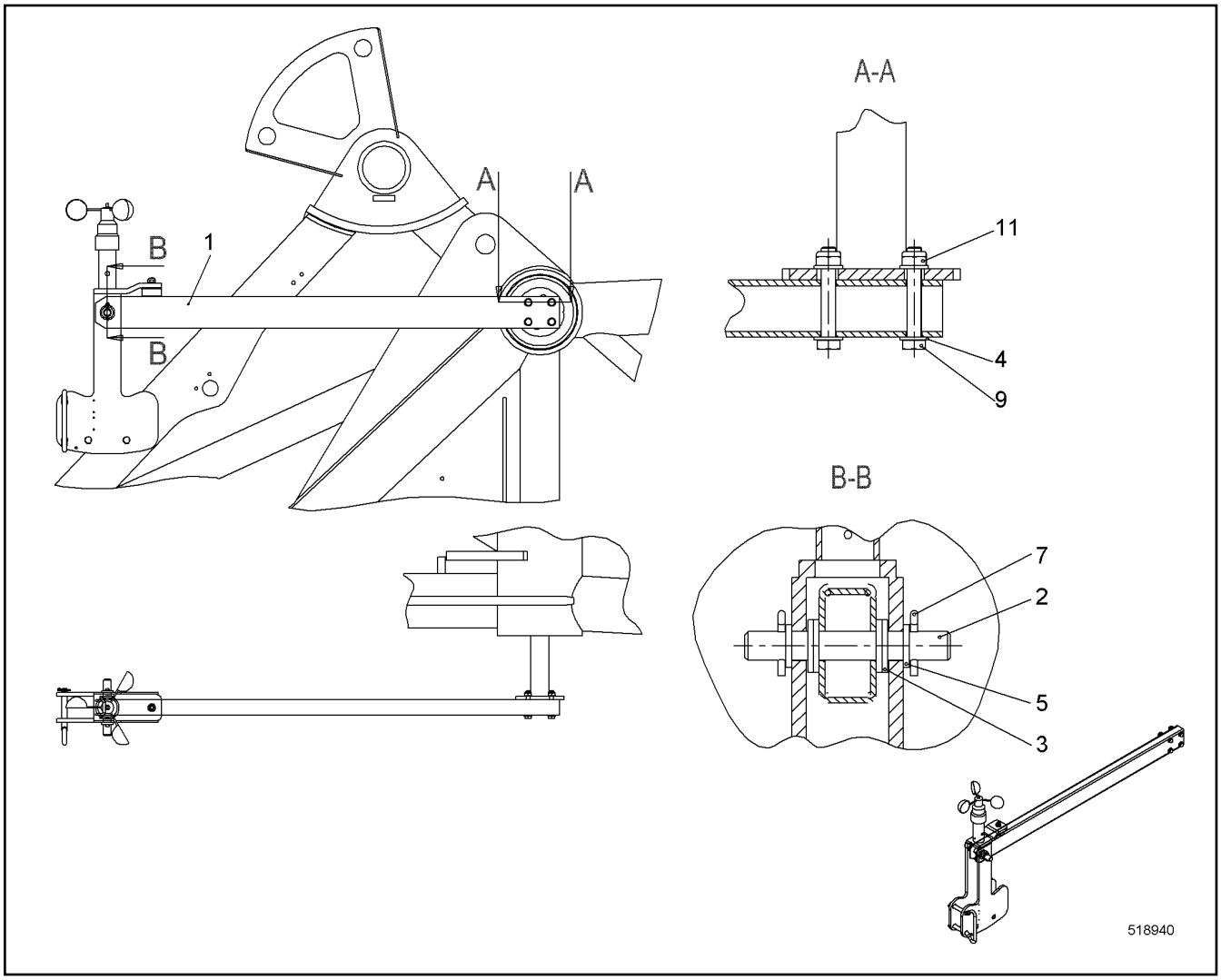

Pos.	Item	Quantity	Description	Bezeichnung	Serie	K
1	11278507	1	SQUARE TUBE	VIERKANTROHR		
2	958214314	1	PIN EN 10278 20X144 S355J2;EN 10025-2	BOLZEN		
3	948967314	4	WASHER 21/37X4 PA 6 G	SCHEIBE		
4	420001114	8	WASHER ISO 7089 10 A4	SCHEIBE		
5	421101714	2	WASHER DIN EN 28738 20 ST;	SCHEIBE		
7	433006314	2	SPLIT PIN ISO 1234 5X32	SPLINT		
9	10538823	4	HEX SCREW ISO 4017 M10X65 A4-70	SECHSKANTSCHRAUBE		
11	10540494	4	HEX NUT ISO 10511 M10 A4	SECHSKANTMUTTER		

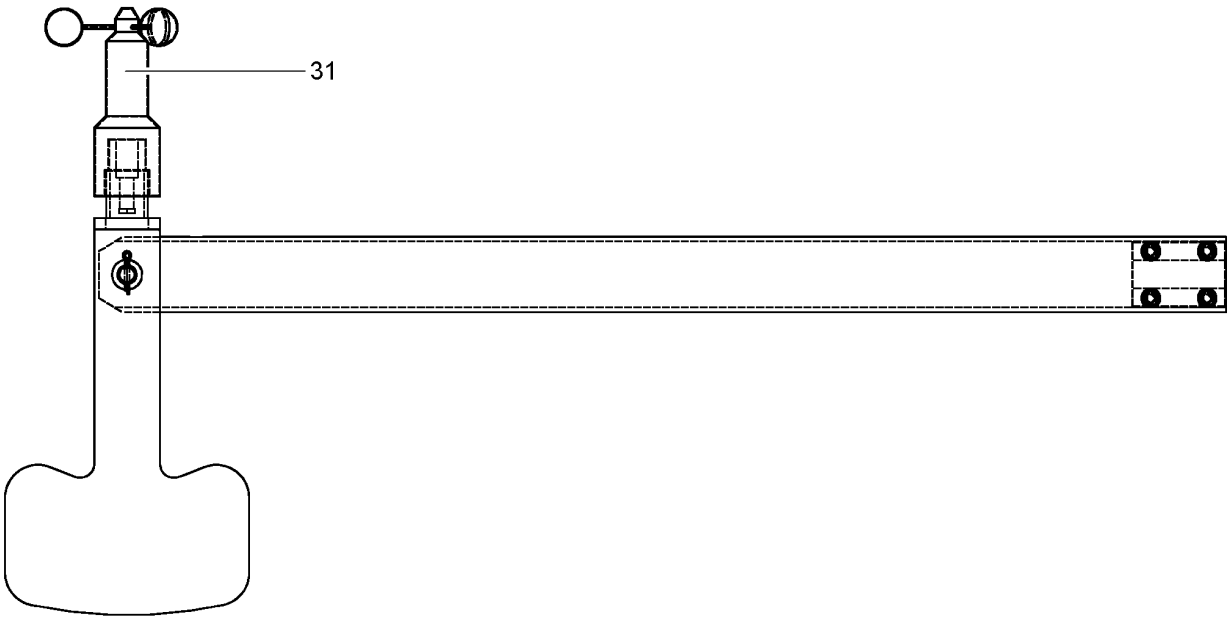

Pos.	Item	Quantity	Description	Bezeichnung	Serie	K
31	692815514	1	WIND TRANSMITTER ⇨ ❑ 587	WINDGEBER		

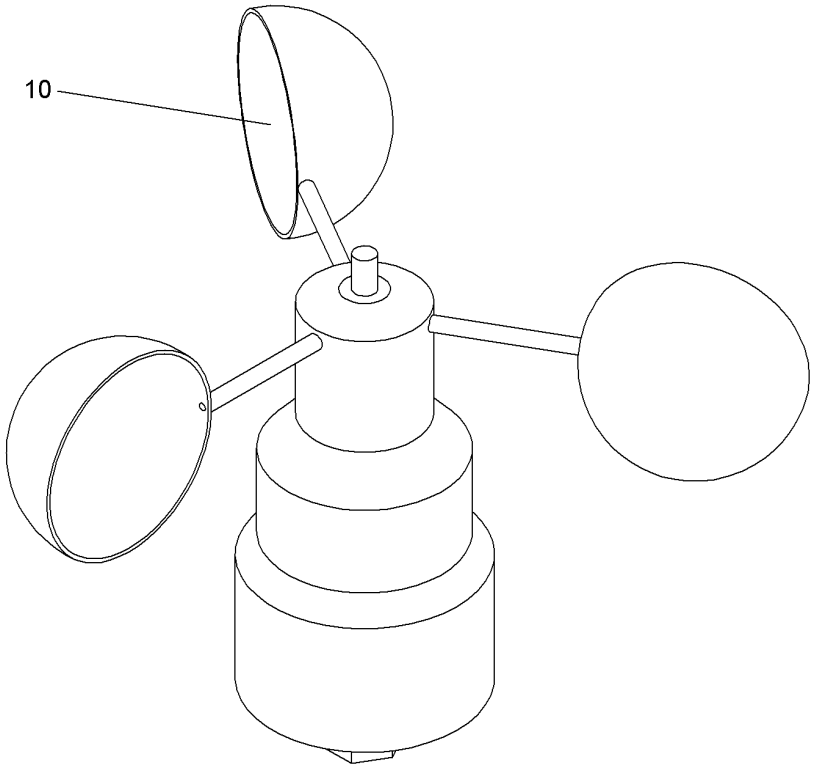

Pos.	Item	Quantity	Description	Bezeichnung	Serie	K
10	11238878	1	VORTEX WHEEL	LOEFFELRAD		

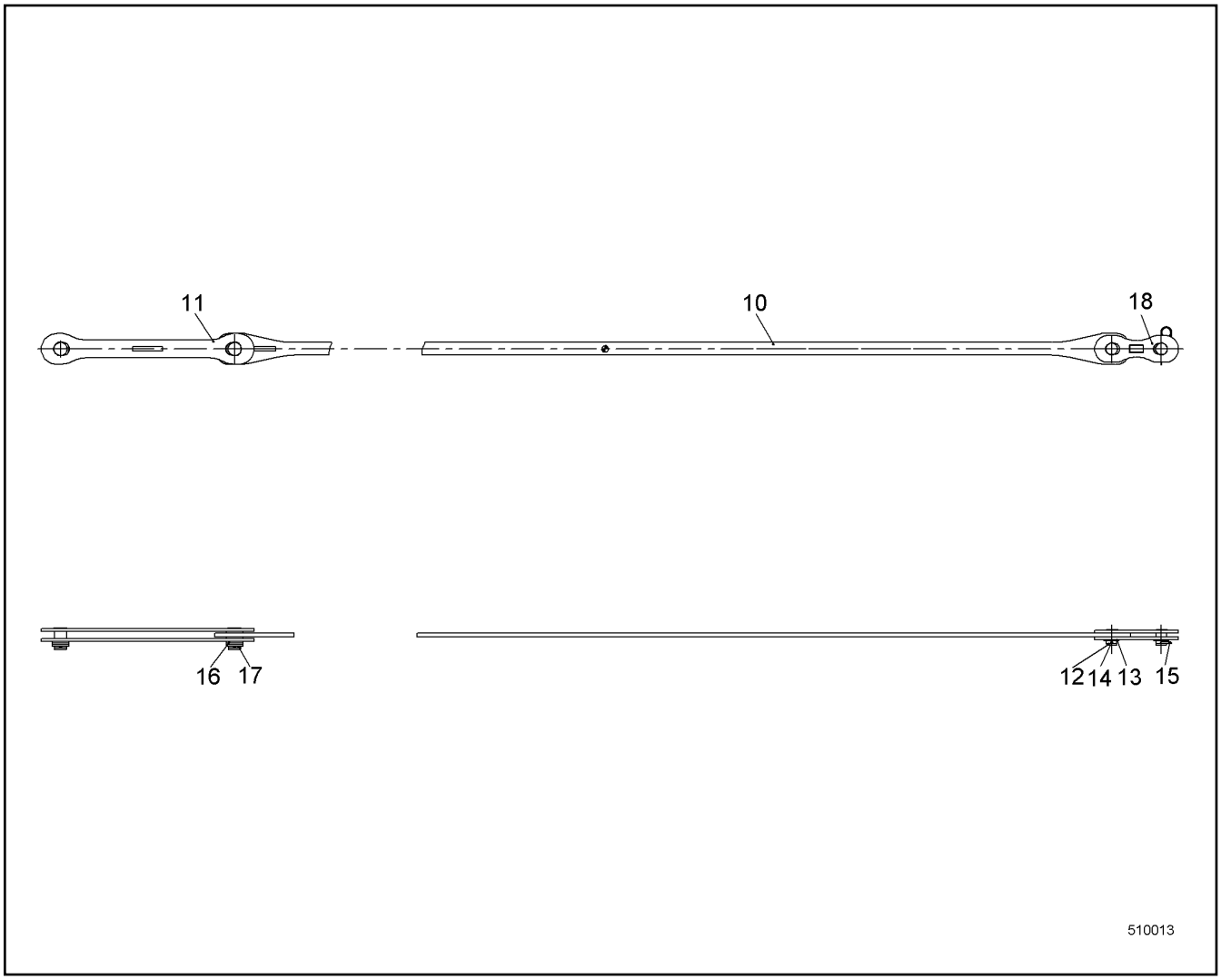

Pos.	Item	Quantity	Description	Bezeichnung	Serie	K
10	10337309	2	ANCHORING ROD	HALTESTANGE		
11	10348694	4	COUPLING LINK	KOPPELLASCHE		
12	959575714	4	PIN 73X95 LHRD900-40;10019758	BOLZEN		
13	421103614	4	WASHER DIN EN 28738 65 ST;	SCHEIBE		
14	433009514	6	SPLIT PIN ISO 1234 8X100 A4	SPLINT		
15	433105008	2	RETAINING SPRING DIN 2194 6MM FS	SICHERUNGSFEDER		
16	421103714	16	WASHER DIN EN 28738 75 ST;	SCHEIBE		
17	959921514	4	PIN 83X131 LHRD900-40;10019758	BOLZEN		
18	10226402	4	COUPLING LINK	KOPPELLASCHE		

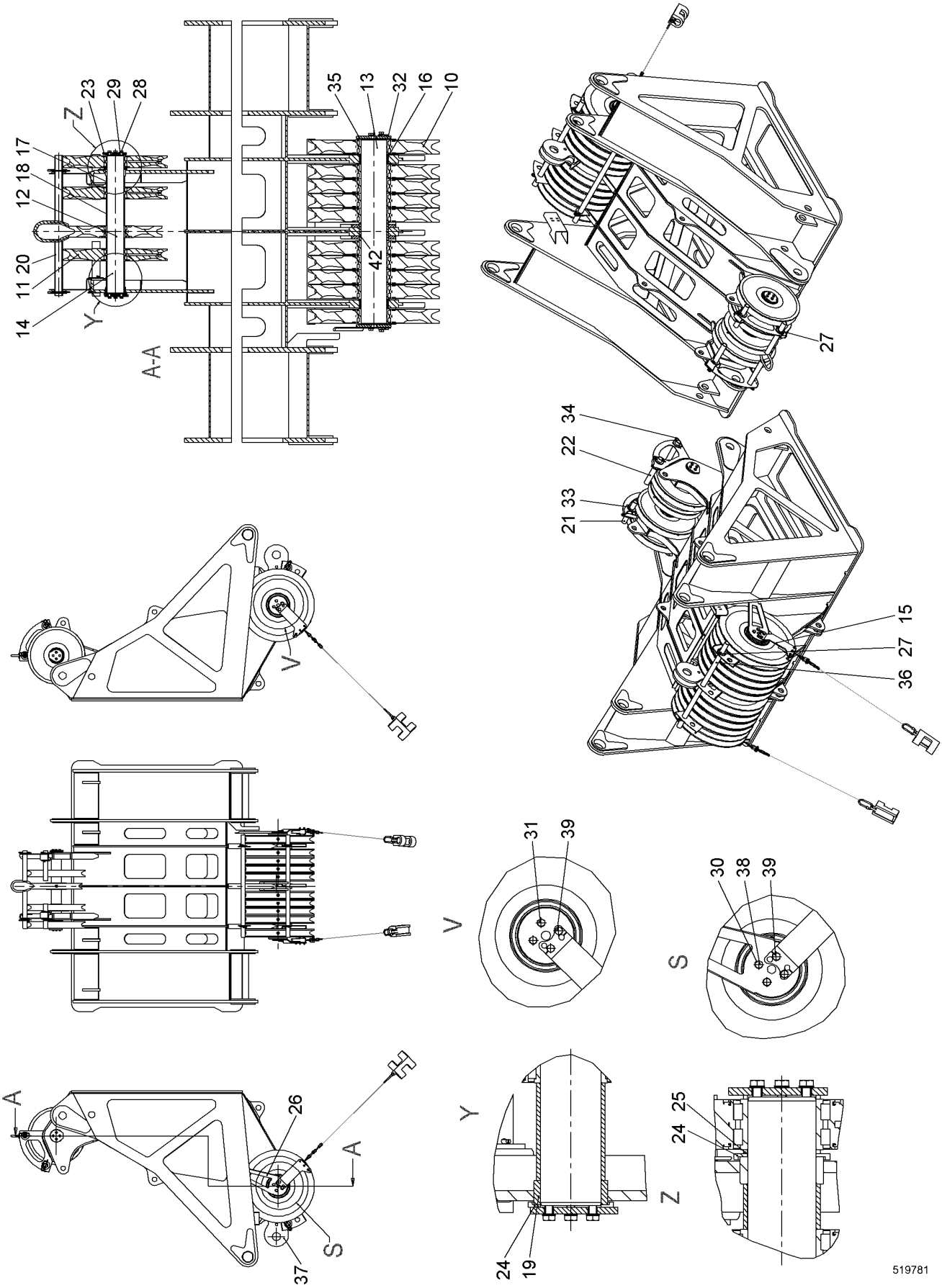

24.5.2017 519781	**138376_ETK_001**	589 (1/2)
LIEBHERR	**ROLLER SET** **ROLLENSATZ**	**99 23 398 14**

Pos.	Item	Quantity	Description	Bezeichnung	Serie	K
10	790202014	10	ROPE PULLEY CPL	SEILROLLE KPL		
11	919279914	3	ROPE PULLEY CPL	SEILROLLE KPL		
12	915523714	1	ROPE PULLEY CPL	SEILROLLE KPL		
13	956802414	1	PIN	BOLZEN		
14	956802514	1	PIN	BOLZEN		
15	993080014	2	HOIST LIMIT SWITCH INSTAL. ⇨ ❑ 591	SPITZENENDSCHALTER EINBAU		
16	956803414	2	BUSHING 140/160X55 LHR355-20;10019728	BUCHSE		
17	956805314	2	BUSHING 91/101.6X60 LHR355-20;10019728	BUCHSE		
18	956805414	2	BUSHING 91/101.6X145 LHR355-20;10019728	BUCHSE		
19	949988214	2	BUSHING 90/110X36 S355J2H;EN 10210-1	BUCHSE		
20	993522914	1	ROPE GUARD ST.CONST.	SEILSCHUTZ SCHWK		
21	956809514	1	ROPE GUARD TUBE	SEILSCHUTZROHR		
22	956213814	1	TUBE	ROHR		
23	949724114	2	COVER	DECKEL		
24	956803514	2	DISTANCE RING 91/127X8 S355J2H;EN 10210-	DISTANZRING		
25	956803714	2	BUSHING 91/101.6X5 LHR355-20;10019728	BUCHSE		
26	956810314	1	WP	WP		
27	420003714	10	WASHER ISO 7089 42	SCHEIBE		
28	406517914	8	HEX SCREW ISO 4017 M12X25 A4-70	SECHSKANTSCHRAUBE		
29	10536581	8	WEDGE LOCK WASHER M12 254 SMO;EN 10	KEILSICHERUNGSSCHEIBE		
30	7024427	8	WEDGE LOCK WASHER M16	KEILSICHERUNGSSCHEIBE		
31	10539317	2	HEX SCREW ISO 4017 M16X35 10.9	SECHSKANTSCHRAUBE		
32	956803214	2	BUSHING EN 10210-2 140.5/159X5 S355J2H;E	BUCHSE		
33	433008108	2	SPLIT PIN ISO 1234 6.3X63	SPLINT		
34	433101208	8	RETAINING SPRING 4MM	SICHERUNGSFEDER		
36	956809314	2	ROPE GUARD TUBE	SEILSCHUTZROHR		
37	950143914	2	PLATE	BLECH		
38	10539318	2	HEX SCREW ISO 4017 M16X40 10.9	SECHSKANTSCHRAUBE		
39	10543902	4	HEX SCREW ISO 4017 M16X45 10.9	SECHSKANTSCHRAUBE		
42	11233062	1	BUSHING 140/160X100 GZ-CUZN25AL5MN4FE	BUCHSE		

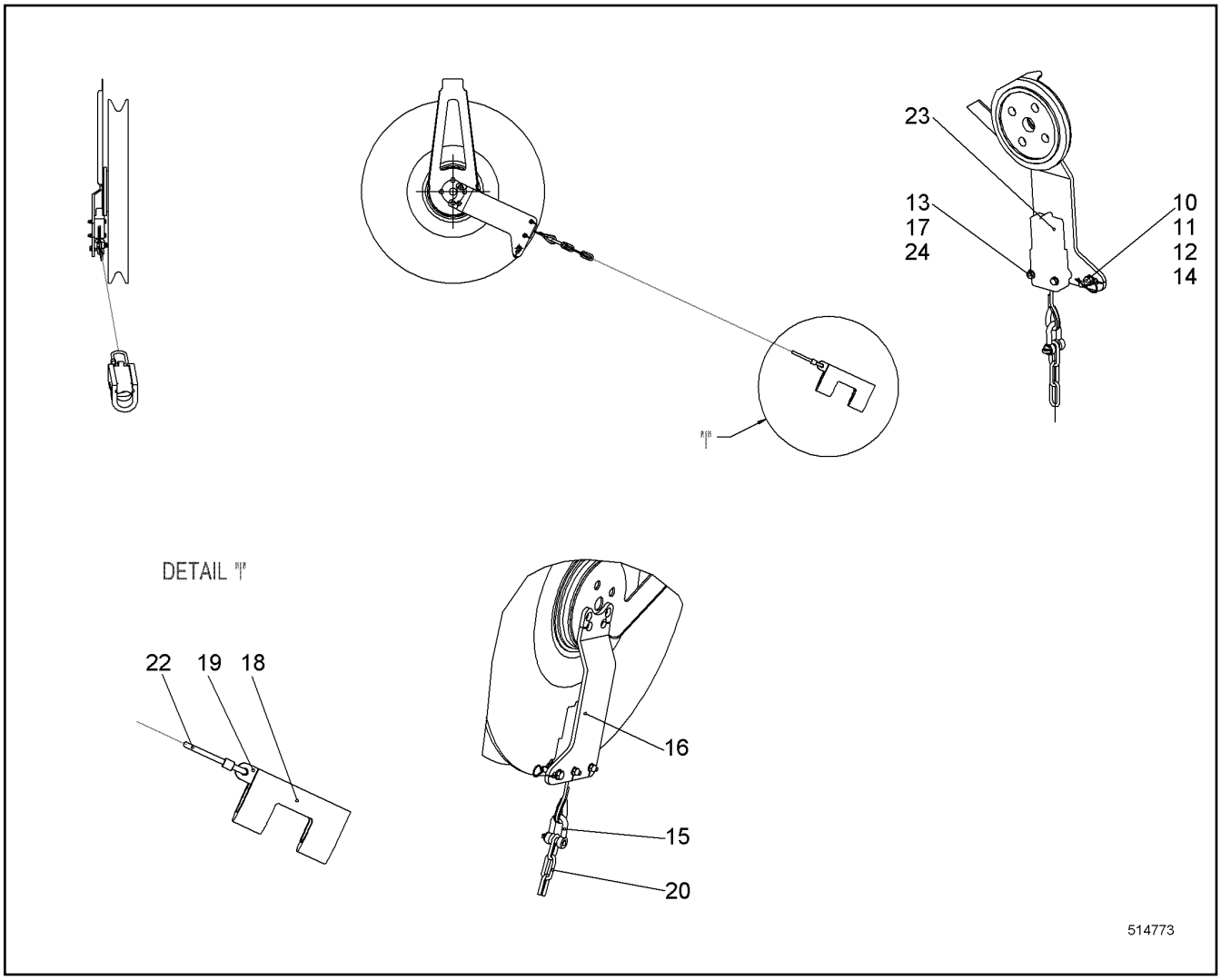

Pos.	Item	Quantity	Description	Bezeichnung	Serie	K
10	420001114	2	WASHER ISO 7089 10 A4	SCHEIBE		
11	10539971	1	HEX SCREW ISO 4017 M10X40 A4-70	SECHSKANTSCHRAUBE		
12	10540494	1	HEX NUT ISO 10511 M10 A4	SECHSKANTMUTTER		
13	420001014	4	WASHER ISO 7089 8 A4	SCHEIBE		
14	433206014	1	SPRING PLUG DIN 11024 2.5	FEDERSTECKER		
15	773939214	1	SHACKLE	SCHAEKEL		
16	950102914	1	PLATE	BLECH		
17	10331507	2	HEX SCREW ISO 4017 M8X65 A4-70	SECHSKANTSCHRAUBE		
18	388283108	1	WEIGHT	GEWICHT		
19	388283208	1	WEIGHT	GEWICHT		
20	740000208	3	CHAIN	KETTE		
22	10473040	1	SCREW CARABINER	SCHRAUBKARABINER		
24	10540493	2	HEX NUT ISO 10511 M8 A4	SECHSKANTMUTTER		

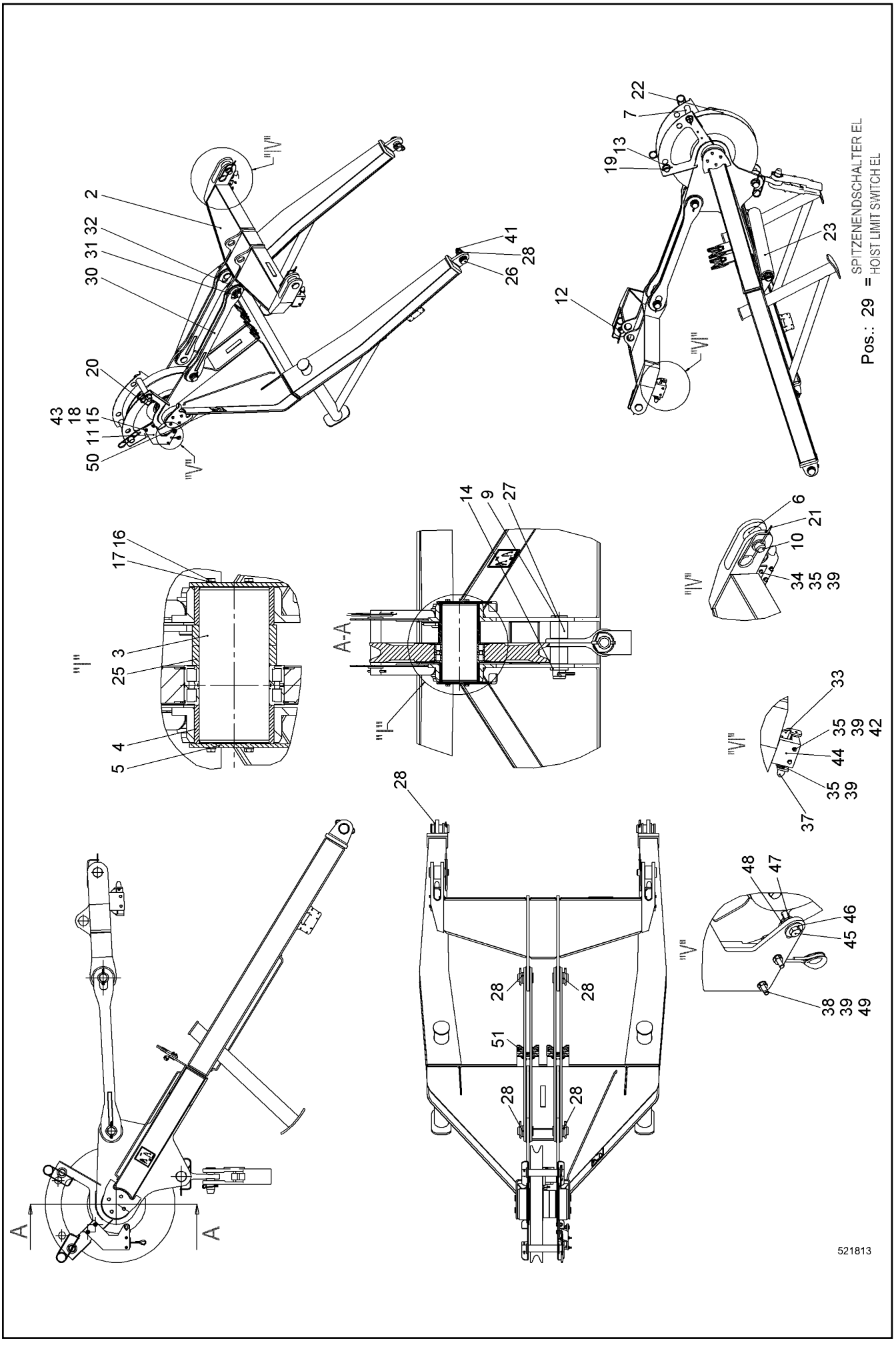
Pos.: 29 = SPITZENENDSCHALTER EL
HOIST LIMIT SWITCH EL
521813

Pos.	Item	Quantity	Description	Bezeichnung	Serie	K
1	994852014	1	TIP BOOM ST.CONST.	SPITZEN AL SCHWK		
2	919075014	1	TRAVERSE	TRAVERSE		
3	956067614	1	PIN	BOLZEN		
4	956070514	2	BUSHING 140/160X77 LHR355-20;10019728	BUCHSE		
5	956067414	2	WP	WP		
6	956070614	2	BUSHING	BUCHSE		
7	956064714	2	TUBE	ROHR		
9	956070214	1	PIN	BOLZEN		
10	942804914	2	PIN 60X120 LHRD900-40;10019758	BOLZEN		
11	971508203	1	WP	WP		
12	421103014	2	WASHER DIN EN 28738 40 ST	SCHEIBE		
13	421103214	4	WASHER DIN EN 28738 45 ST;	SCHEIBE		
14	421103414	1	WASHER DIN EN 28738 55 ST;	SCHEIBE		
15	406517314	2	HEX SCREW ISO 4017 M12X30 A4-70	SECHSKANTSCHRAUBE		
16	406518714	8	HEX SCREW ISO 4017 M10X20 A4-70	SECHSKANTSCHRAUBE		
17	420001114	8	WASHER ISO 7089 10 A4	SCHEIBE		
18	4901782	2	WASHER ISO 7089 12 A4	SCHEIBE		
19	433009114	2	SPLIT PIN ISO 1234 8X63 A4	SPLINT		
20	433102508	2	RETAINING SPRING 5MM	SICHERUNGSFEDER		
21	433105008	3	RETAINING SPRING DIN 2194 6MM FS	SICHERUNGSFEDER		
22	790202014	1	ROPE PULLEY CPL	SEILROLLE KPL		
23	11248258	1	ROPE GUIDE ST.CONST. RFK ⇨ ❑ 594	SEILFUEHRUNG SCHWK NRS		
25	956092714	2	BUSHING 140/168.3X40 LHR355-20;10019728	BUCHSE		
26	949174814	2	PIN 58X113 LHRD900-40;10019758	BOLZEN		
28	421103314	12	WASHER DIN EN 28738 50 ST;	SCHEIBE		
29	971495903	1	HOIST LIMIT SWITCH EL ⇨ ❑ 595	SPITZENENDSCHALTER EL		
30	956319314	4	WP	WP		
31	948959414	4	PIN 58X95 LHRD900-40;10019758	BOLZEN		
32	433010314	4	SPLIT PIN ISO 1234 10X80 A4	SPLINT		
33	10551670	2	CONSOLE ST. CONST.	KONSOLE SCHWK		
34	406501314	4	HEX SCREW ISO 4017 M8X30 A4-70	SECHSKANTSCHRAUBE		
35	420001014	14	WASHER ISO 7089 8 A4	SCHEIBE		
37	726922114	2	RUBBER MOUNT	LAGER GUMMI		
38	10447017	2	LOCKING RING 8	SICHERUNGSRING		
39	10540493	12	HEX NUT ISO 10511 M8 A4	SECHSKANTMUTTER		
41	433101208	2	RETAINING SPRING 4MM	SICHERUNGSFEDER		
42	10541593	4	HEX SCREW ISO 4017 M8X85 A4-70	SECHSKANTSCHRAUBE		
43	411516914	2	HEX NUT ISO 4032 M12 A4-70	SECHSKANTMUTTER		
44	11260806	2	SUPPORT	AUFLAGE		
45	10539971	1	HEX SCREW ISO 4017 M10X40 A4-70	SECHSKANTSCHRAUBE		
46	10540511	2	WASHER ISO 7093-1 10 A4	SCHEIBE		
47	10540494	1	HEX NUT ISO 10511 M10 A4	SECHSKANTMUTTER		
48	433206014	1	SPRING PLUG DIN 11024 2.5	FEDERSTECKER		
49	10538808	2	HEX SCREW ISO 4017 M8X60 A4-70	SECHSKANTSCHRAUBE		
50	790422414	1	SIGN	SCHILD		
51	11252042	2	SUPPORT CPL ⇨ ❑ 597	AUFLAGE KPL		

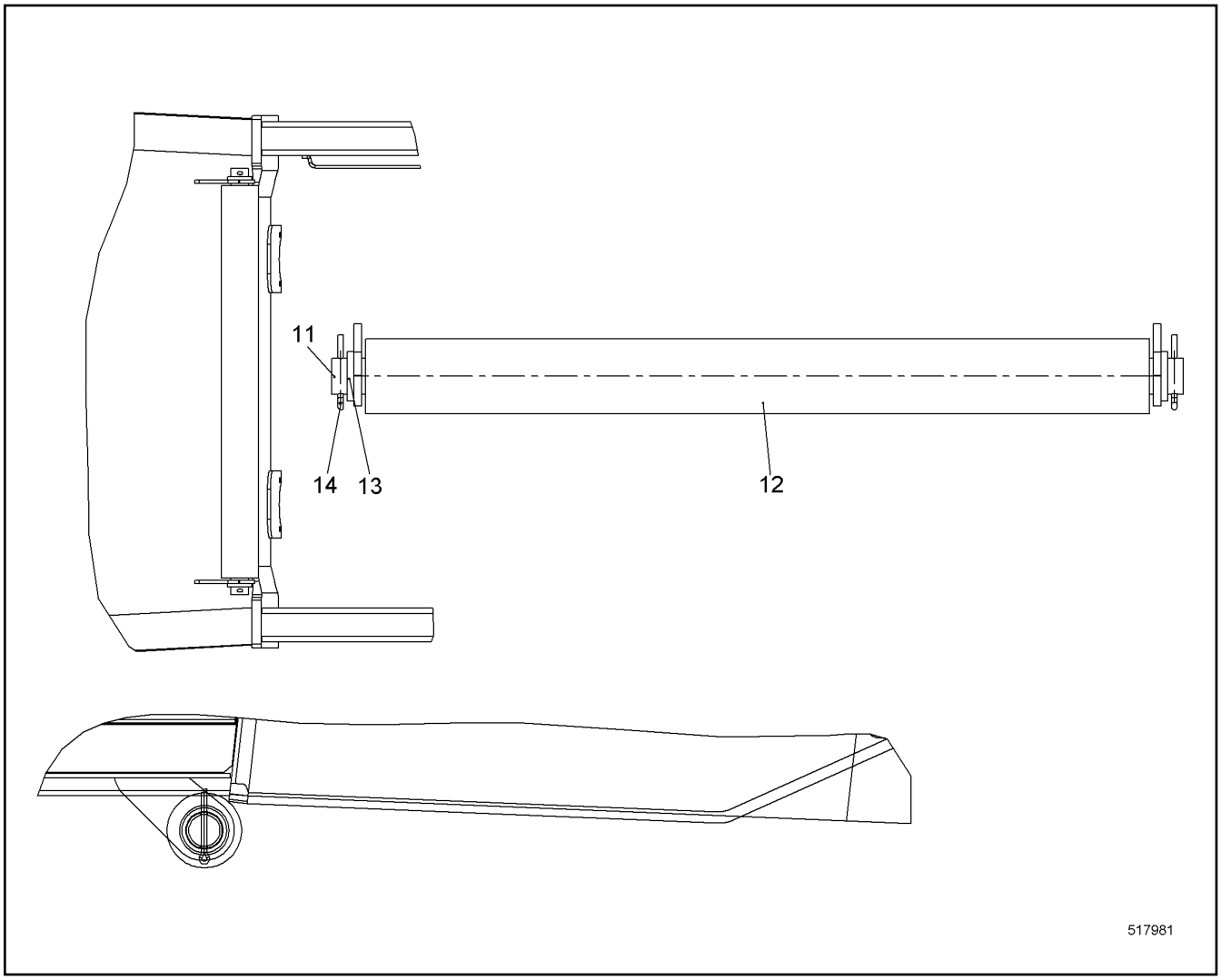

Pos.	Item	Quantity	Description	Bezeichnung	Serie	K
11	11248260	1	TUBE	ROHR		
12	11248261	1	ROLLER	ROLLE		
13	421103314	2	WASHER DIN EN 28738 50 ST;	SCHEIBE		
14	433009408	2	SPLIT PIN ISO 1234 8X80	SPLINT		

OHNE BILD
WITHOUT ILLUSTRATION
SANS PLANCHE
SIN FIG.
SEM ILUSTRAÇÃO
БЕЗ ИЗОБРАЖЕНИЯ

600000

Pos.	Item	Quantity	Description	Bezeichnung	Serie	K
30	693155014	1	SOCKET SHELL	TUELLENGEHAEUSE		
31	605604714	1	MALE INSERT	STIFTEINSATZ		
32	605601701	6	CONTACT PIN	KONTAKTSTIFT		
33	260493402	1	REDUCER	REDUZIERUNG		
34	10045155	1	CABLE GLAND	KABELVERSCHRAUBUNG		
35	600454314	4	CONTROL LEAD	STEUERLEITUNG		
36	927521808	1	LIMIT SWITCH HOISTING ABOVE ⇨ ❑ 596	ENDSCHALTER HUB OBEN		
50	693157114	1	BS HOUSING	SOCKELGEHAEUSE		
51	605609514	1	FEMALE INSERT	BUCHSENEINSATZ		
52	693061514	2	STOPPER PLUG	BLINDSTOPFEN		

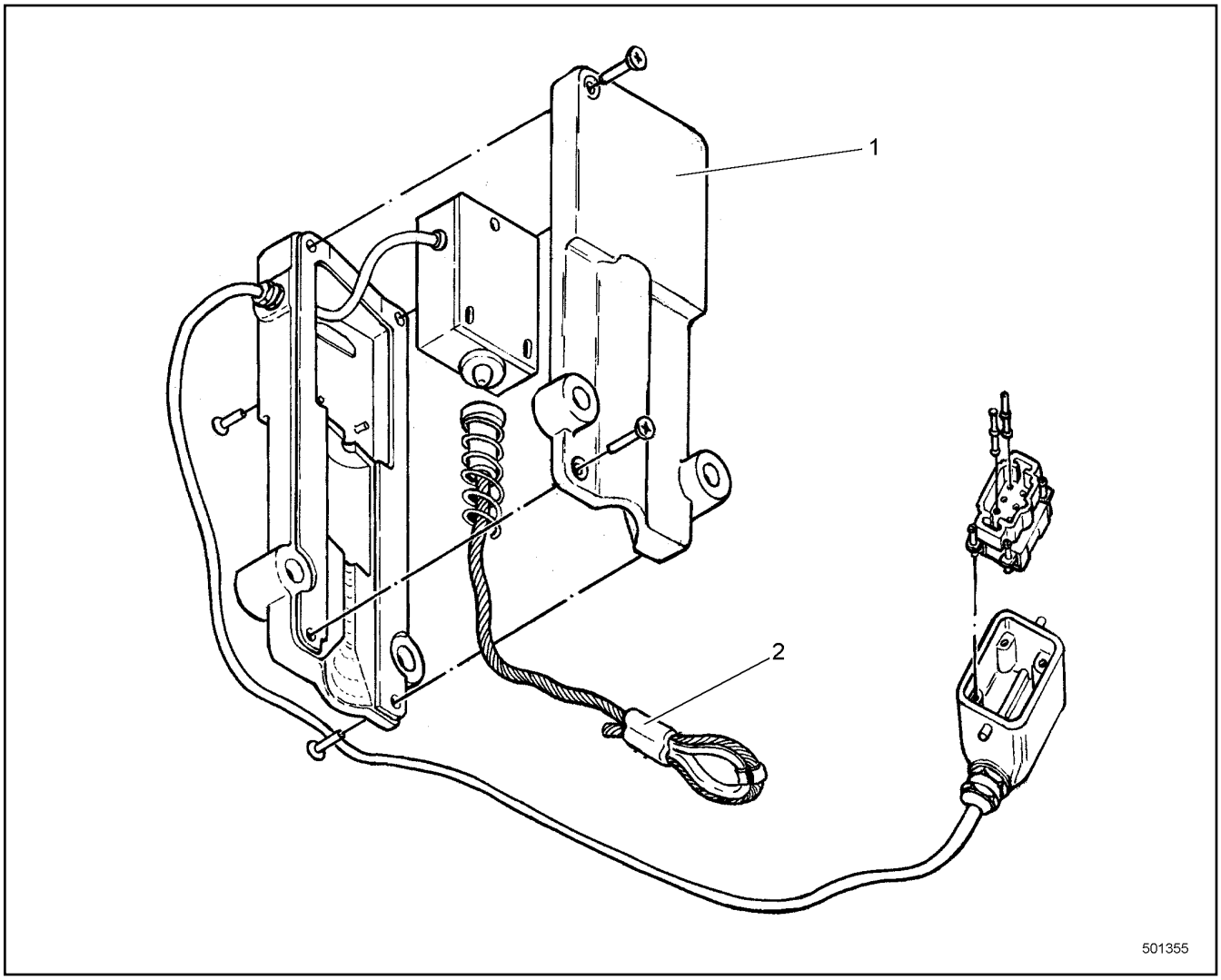

Pos.	Item	Quantity	Description	Bezeichnung	Serie	K
1	606655208	1	SWITCHING ELEMENT	SCHALTELEMENT		
2	606655308	1	AUXILIARY ROPE	HILFSSEIL		

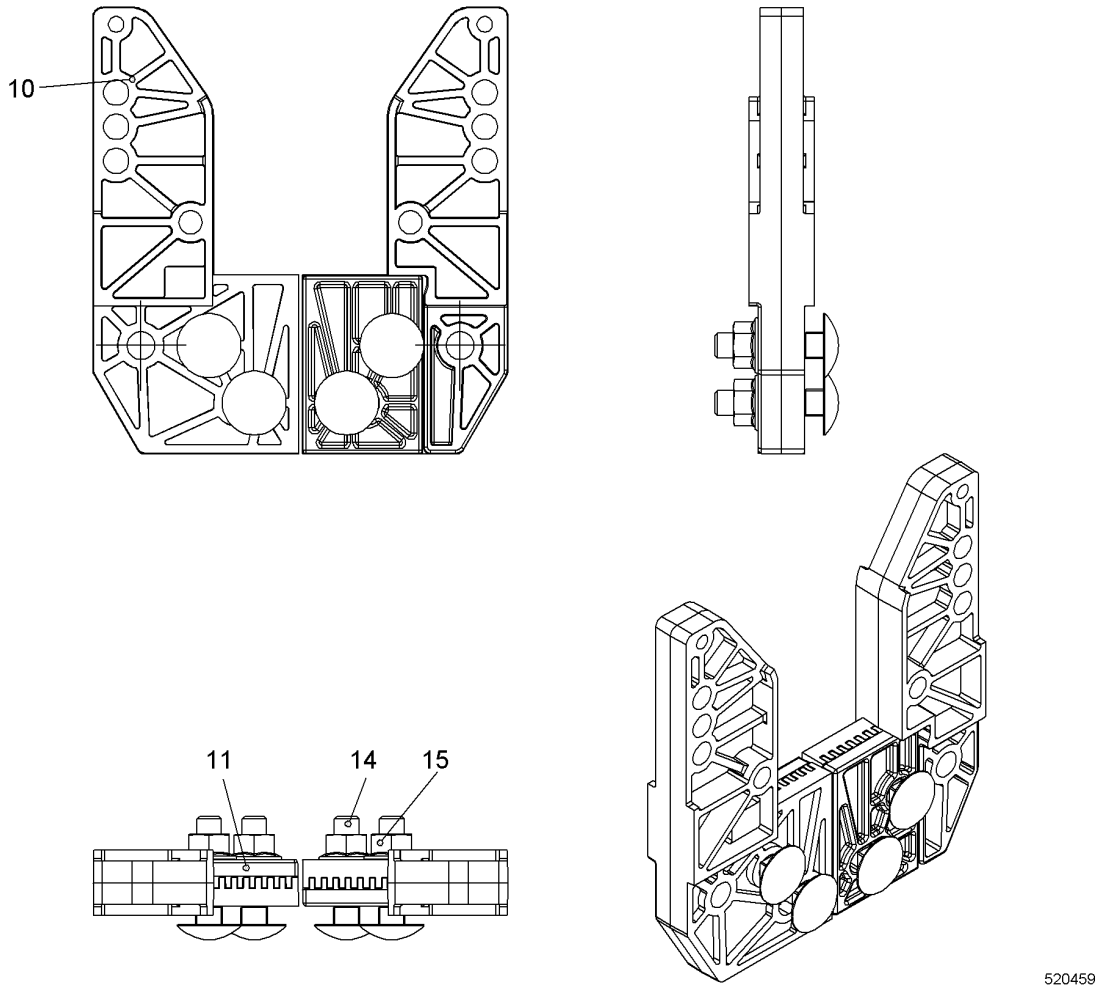

Pos.	Item	Quantity	Description	Bezeichnung	Serie	K
10	11219265	2	SUPPORT	AUFLAGE		
11	11219851	2	SHEET	PLATTE		
12	773400308	0.62	STEEL WIRE ROPE	STAHLDRAHTSEIL		
13	773920008	4	FERRULE	PRESSKLEMME		
14	11314349	4	CHEESE HEAD SCREW DIN 603 M8X35 A4-70	FLACHRUNDSCHRAUBE		
15	11314341	4	HEX NUT DIN EN 1663 M8 A4	SECHSKANTMUTTER		

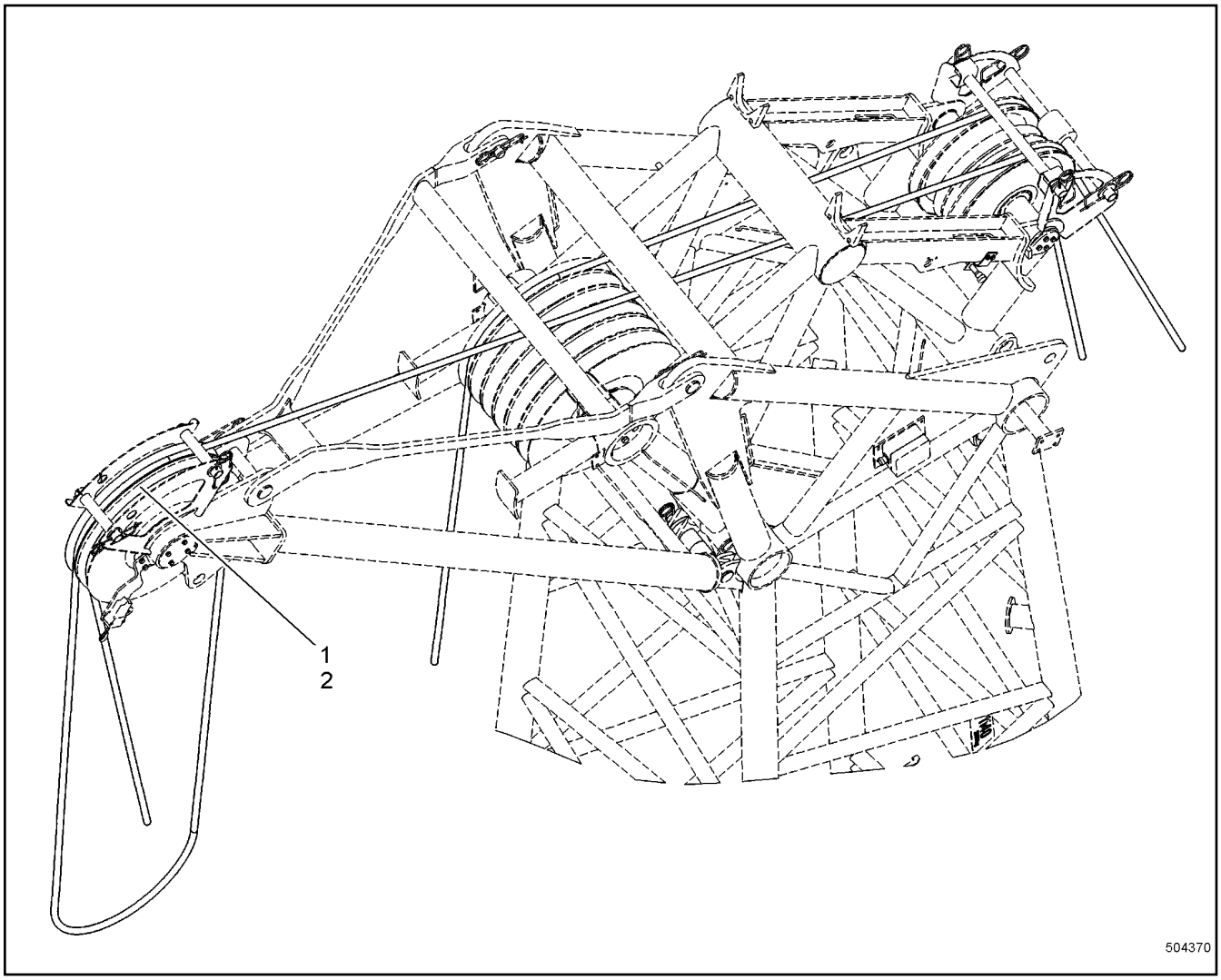

Pos.	Item	Quantity	Description	Bezeichnung	Serie	K
1	790202014	1	ROPE PULLEY CPL	SEILROLLE KPL		
2	790282814	1	SIGN	SCHILD		

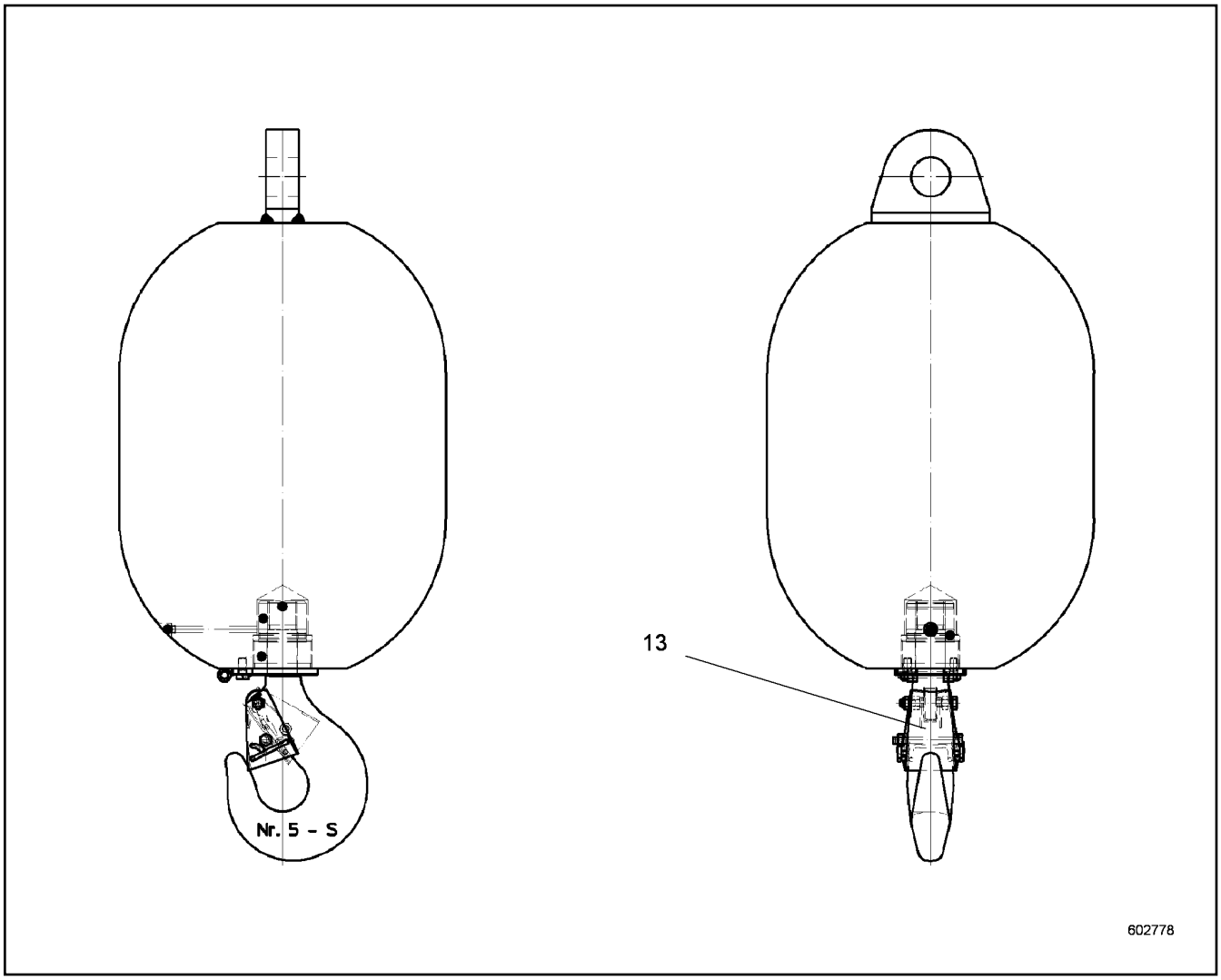

Pos.	Item	Quantity	Description	Bezeichnung	Serie	K
1	10522845	1	SINGLE HOOK	EINFACHHAKEN		
2	10522847	1	FLANGED BOLT MO90X4108X53	BUNDSCHRAUBE		
3	10522848	1	ROLLER BEARING	WAELZLAGER		
13	10348527	1	PL LATCH	PL FALLE		

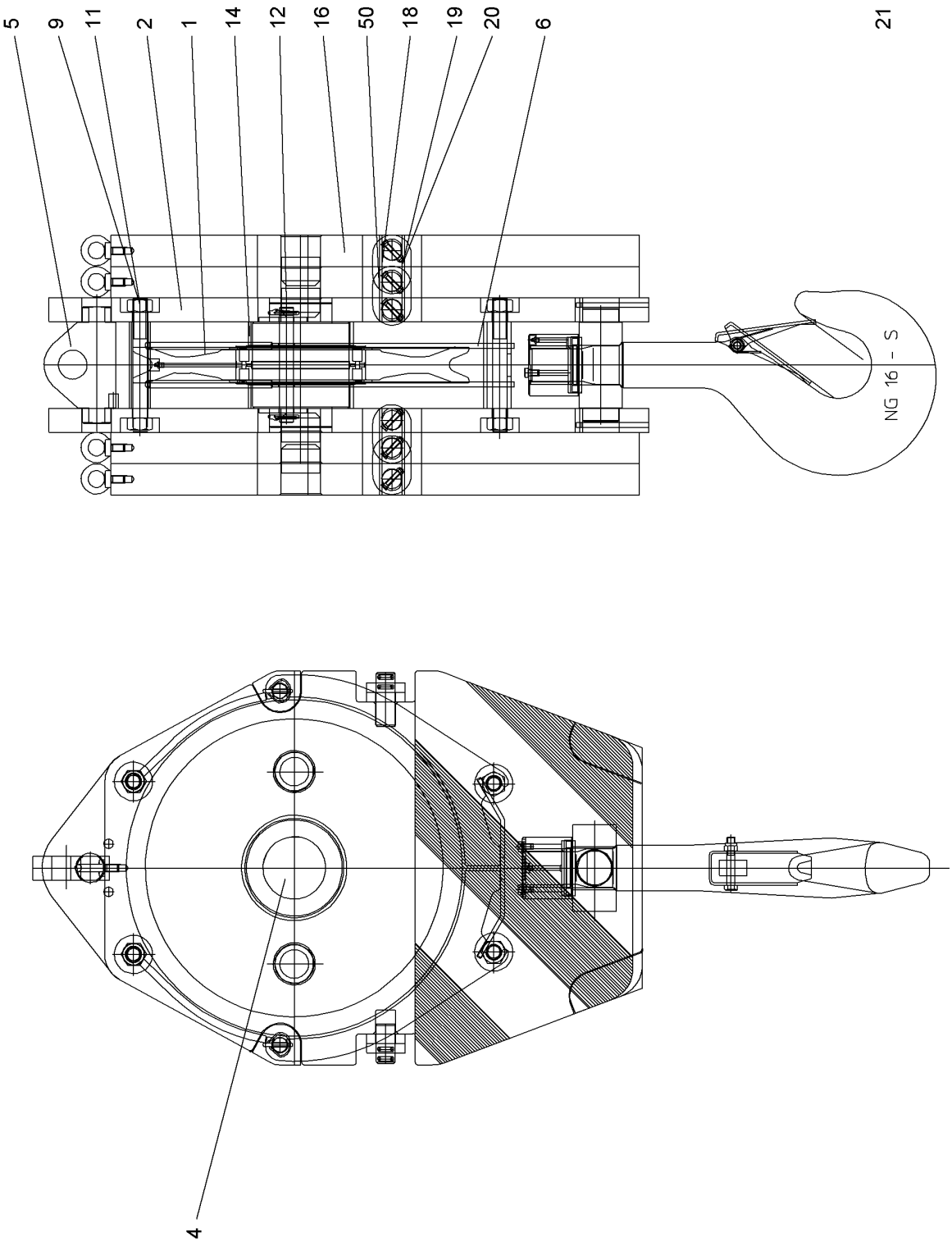
5
9
11
2
1
14
12
16
50
18
19
20
6
21
NG 16 - S
4
607601

Pos.	Item	Quantity	Description	Bezeichnung	Serie	K
1	10504352	1	ROPE PULLEY ⇨ ❑ 602	SEILROLLE		
2	11274624	2	SIDE PLATE	SEITENBLECH		
4	11493575	1	PIN	BOLZEN		
5	11481158	1	ROPE FIXING POINT	SEILFESTPUNKT		
6	11481159	1	ROPE GUARD	SEILSCHUTZ		
9	11237759	4	HEX SCREW DIN 931 M30X250 8.8	SECHSKANTSCHRAUBE		
11	10584965	4	HEX NUT DIN 934 M30 8	SECHSKANTMUTTER		
12	10814912	2	ROPE PROTECTION ROD	SEILSCHUTZSTANGE		
14	11493578	2	DISTANCE TUBE	DISTANZROHR		
16	11274636	4	PLATE	BLECH		
18	10591682	4	BUTT STRAP	LASCHE		
19	11236106	12	SCREW DIN 931 M8X50 8.8	SCHRAUBE		
20	11236108	12	HEX NUT DIN 985 M8 8	SECHSKANTMUTTER		
21	11274638	1	HANGER ⇨ ❑ 603	AUFHAENGUNG		
50	10591681	4	BUTT STRAP	LASCHE		

OHNE BILD
WITHOUT ILLUSTRATION
SANS PLANCHE
SIN FIG.
SEM ILUSTRAÇÃO
БЕЗ ИЗОБРАЖЕНИЯ

600000

Pos.	Item	Quantity	Description	Bezeichnung	Serie	K
1	11271491	1	ROPE SHEAVE	SEILSCHEIBE		
2	10573892	1	CYL ROLLER BEARING	ZYL ROLLENLAGER		
3	10573893	2	LOCKING RING	SICHERUNGSRING		
4	11312502	1	GREASE NIPPLE	SCHMIERNIPPEL		

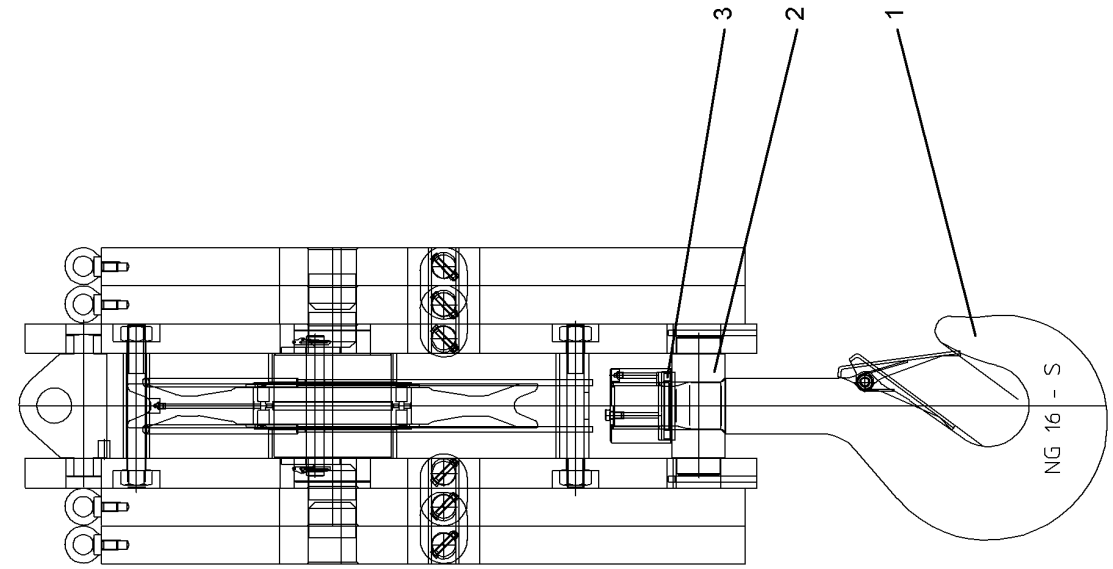

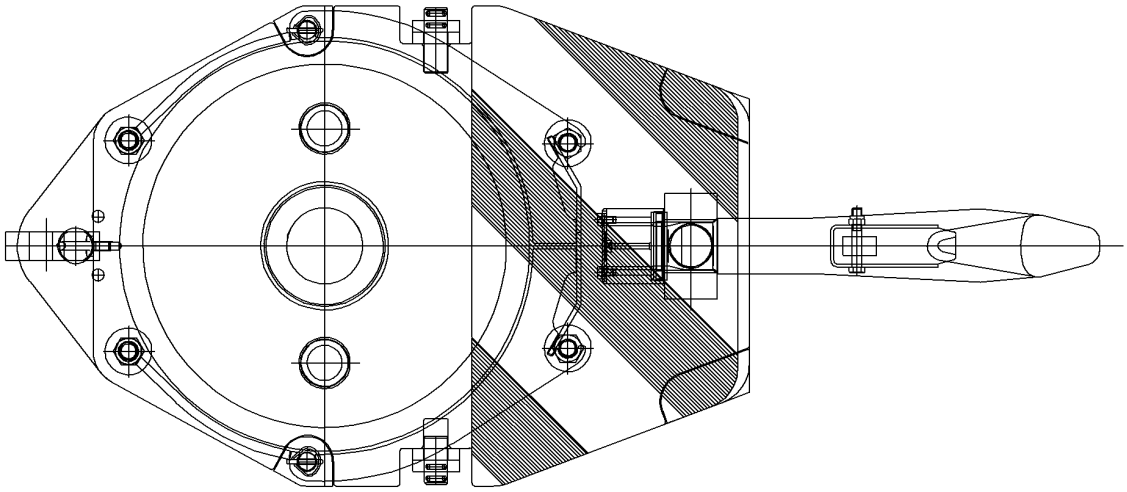

607602

Pos.	Item	Quantity	Description	Bezeichnung	Serie	K
1	11481162	1	SINGLE HOOK ⇨ ❑ 605	EINFACHHAKEN		
2	11274675	1	ROTATABLE BEAM	SCHWENKTRAVERSE		
3	10574043	1	ROLLER BEARING	WAELZLAGER		

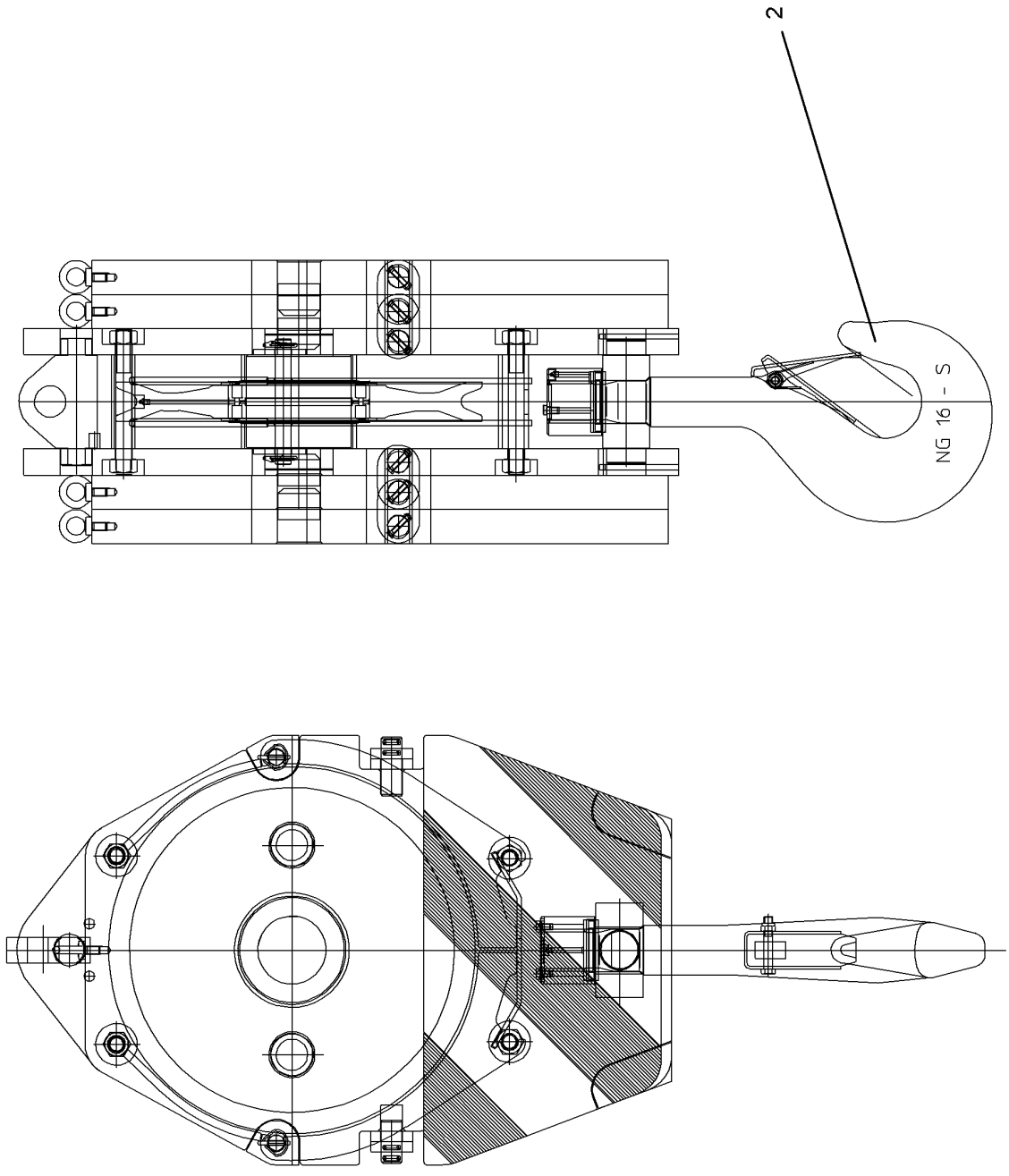

607603

Pos.	Item	Quantity	Description	Bezeichnung	Serie	K
2	10350196	1	SAFETY TRAP	SICHERUNGSFALLE		

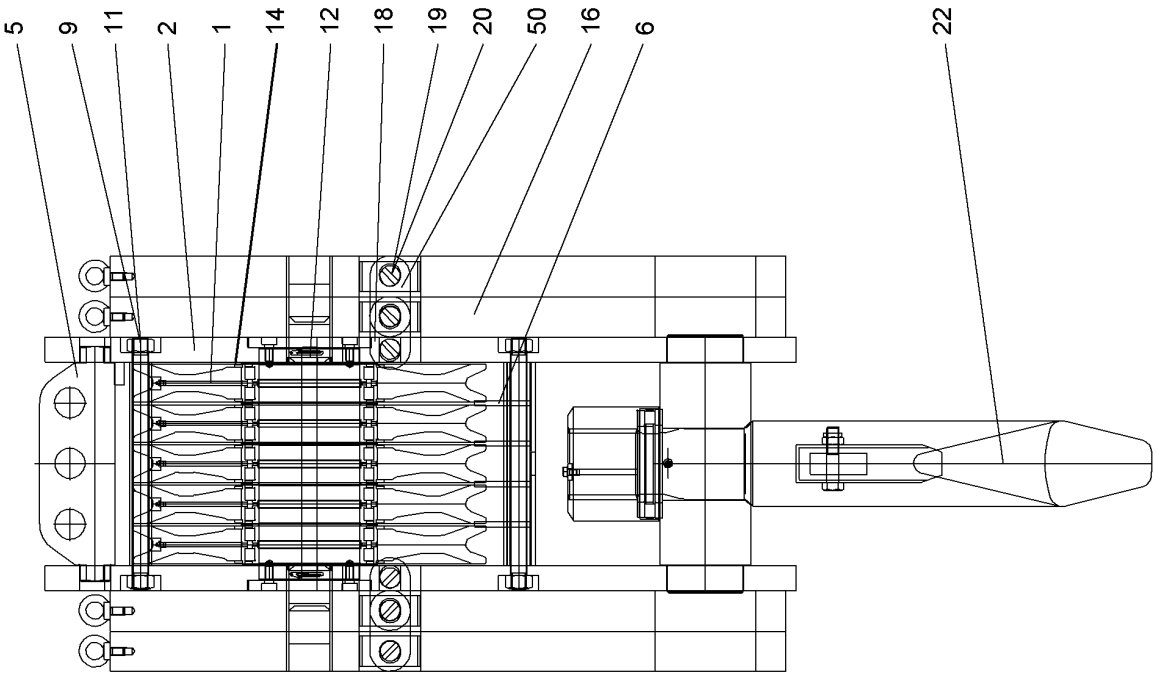

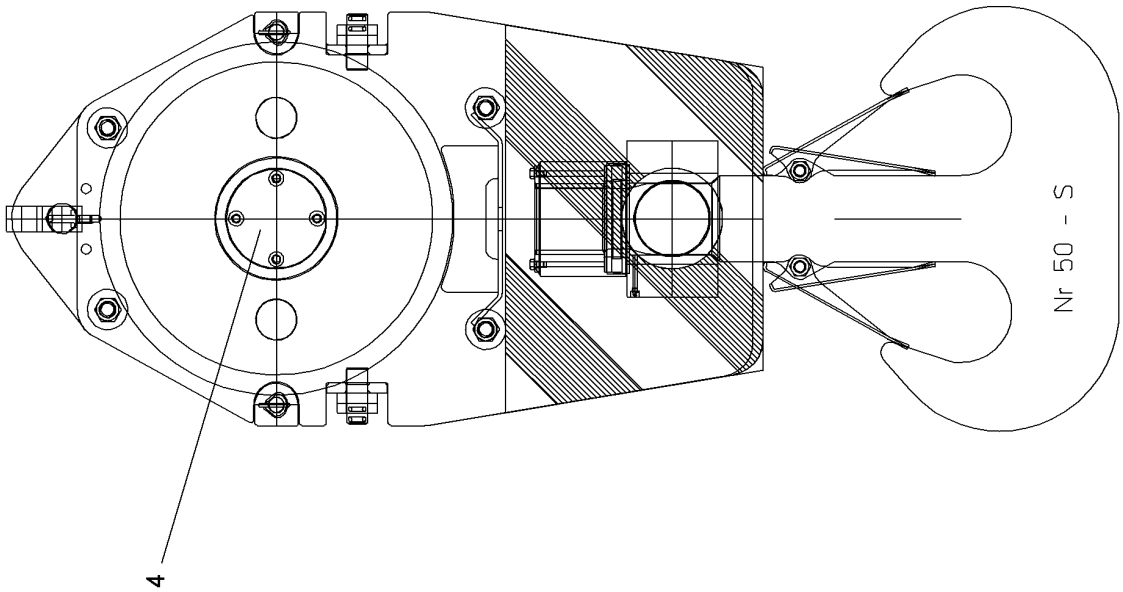

607608

Pos.	Item	Quantity	Description	Bezeichnung	Serie	K
1	10504352	5	ROPE PULLEY ⇨ ❑ 602	SEILROLLE		
2	11274798	2	SIDE PLATE	SEITENBLECH		
4	11213816	1	PIN COMPL.	BOLZEN KPL.		
5	11491267	1	ROPE FIXING POINT	SEILFESTPUNKT		
6	11274800	1	ROPE GUARD	SEILSCHUTZ		
9	11274557	4	SPACER BOLT	DISTANZBOLZEN		
11	10584965	8	HEX NUT DIN 934 M30 8	SECHSKANTMUTTER		
12	10576718	2	ROPE PROTECTION ROD	SEILSCHUTZSTANGE		
14	11213818	2	COVER PLATE	ABDECKBLECH		
16	11236114	4	PLATE CPL	BLECH KPL		
18	571895008	4	BUTT STRAP	LASCHE		
19	11236106	12	SCREW DIN 931 M8X50 8.8	SCHRAUBE		
20	11236108	12	HEX NUT DIN 985 M8 8	SECHSKANTMUTTER		
22	11274801	1	HANGER ⇨ ❑ 609	AUFHAENGUNG		
50	11210610	4	BUTT STRAP	LASCHE		

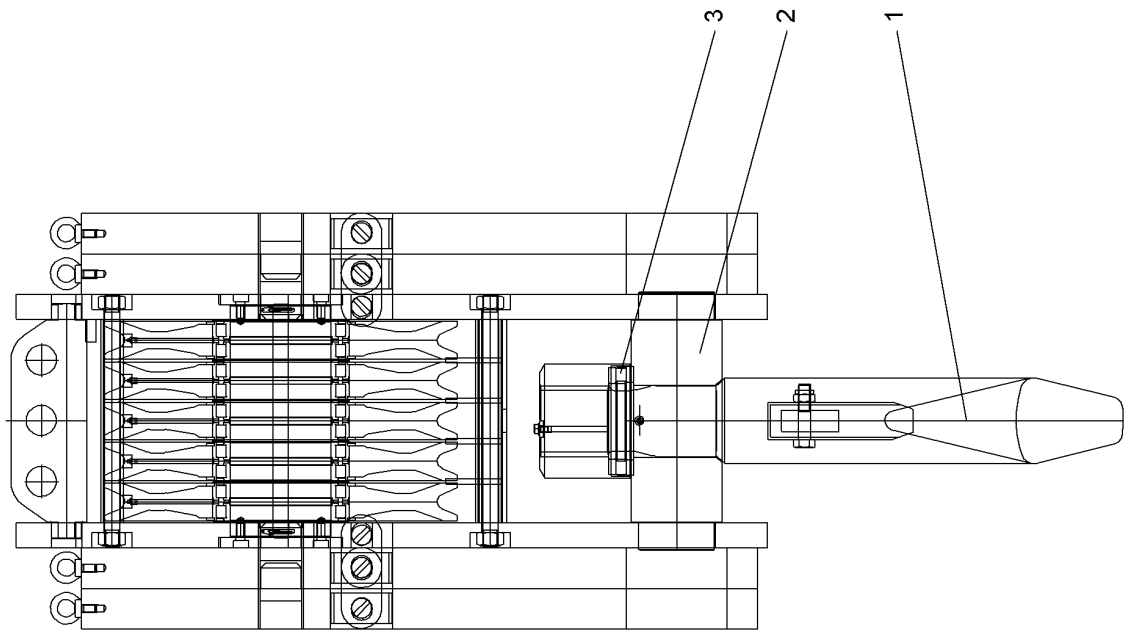

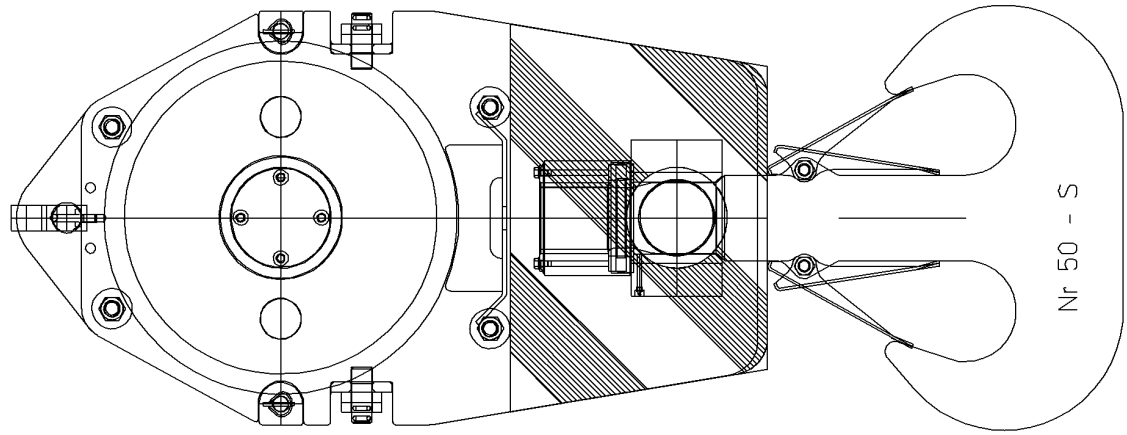

607609

Pos.	Item	Quantity	Description	Bezeichnung	Serie	K
1	11274829	1	TWIN HOOK CPL ⇨ ❑ 611	DOPPELHAKEN KPL		
2	11274831	1	ROTATABLE BEAM	SCHWENKTRAVERSE		
3	11274832	1	ROLLER BEARING	WAELZLAGER		

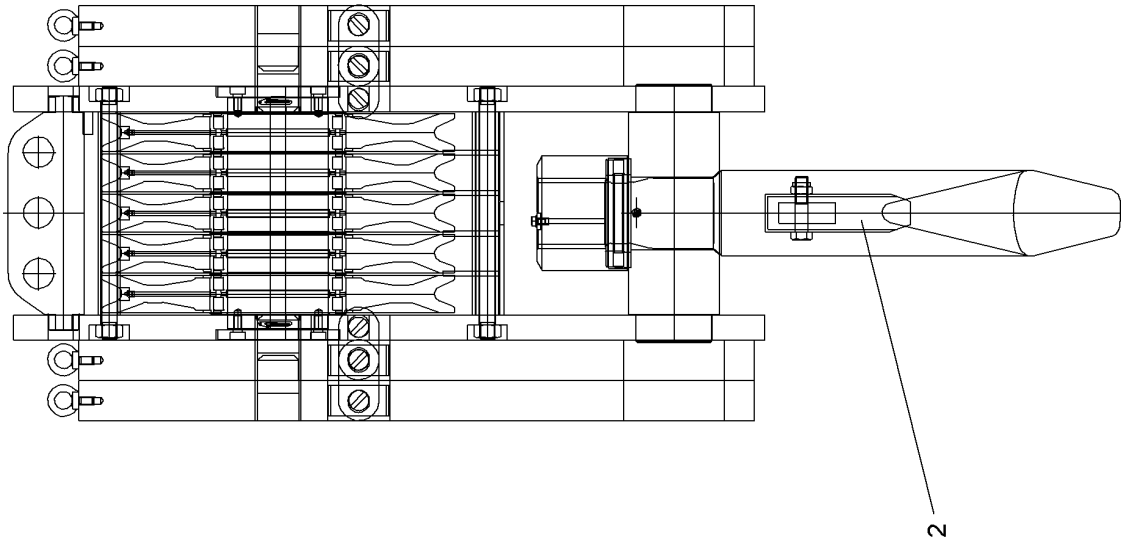

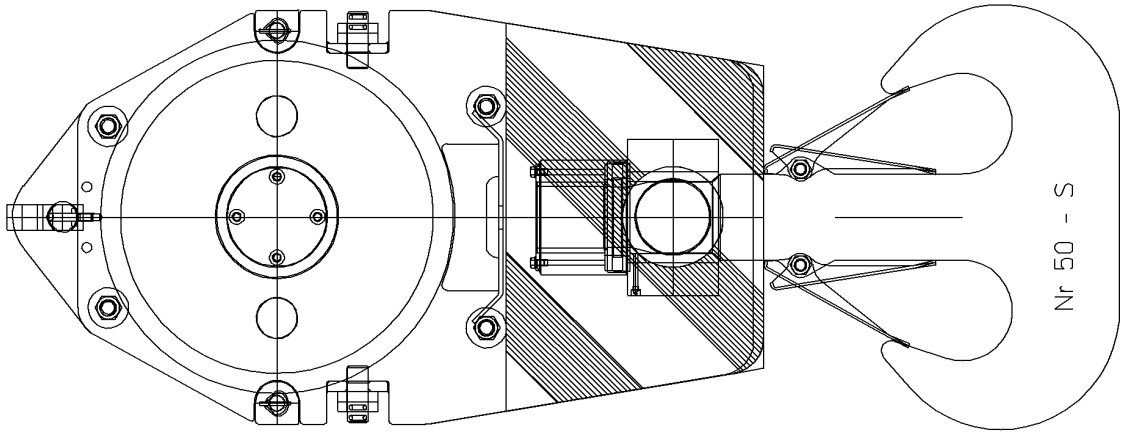

607610

Pos.	Item	Quantity	Description	Bezeichnung	Serie	K
2	10350190	2	SAFETY TRAP	SICHERUNGSFALLE		

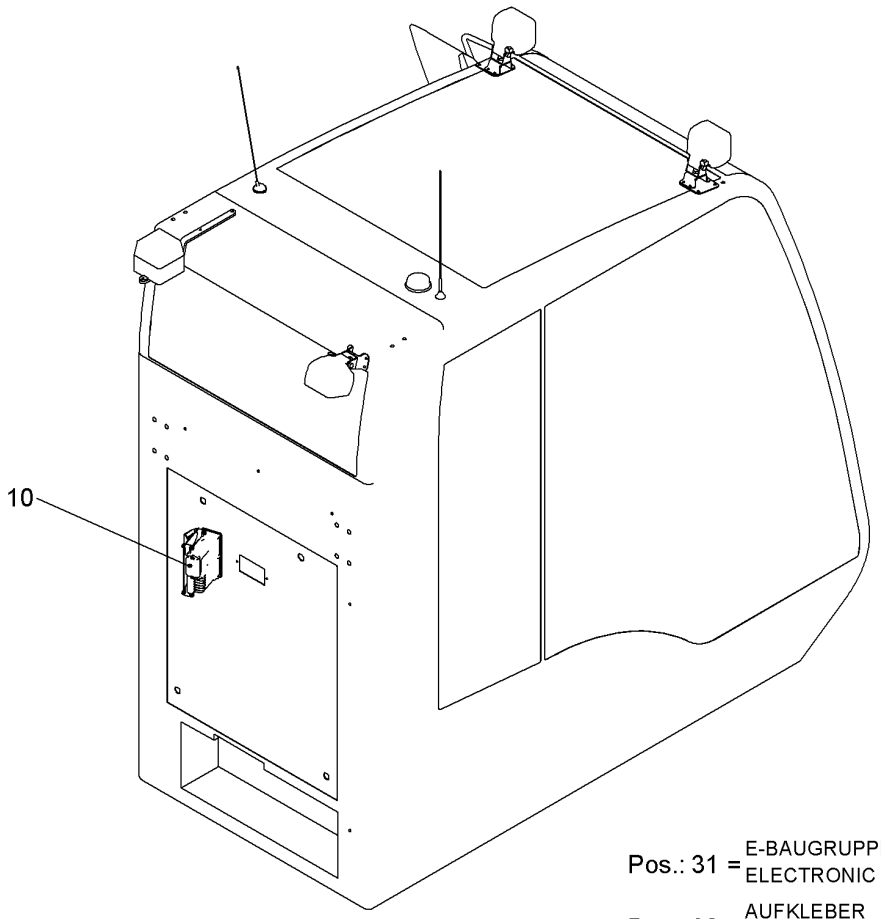

Pos.	Item	Quantity	Description	Bezeichnung	Serie	K
10	11223226	1	MODEM CPL RFK ⇨ ❑ 614	MODEM KPL NRS		
31	10688831	1	ELECTRONIC MODULES	E-BAUGRUPPE		
32	10541838	1	STICKER	AUFKLEBER		

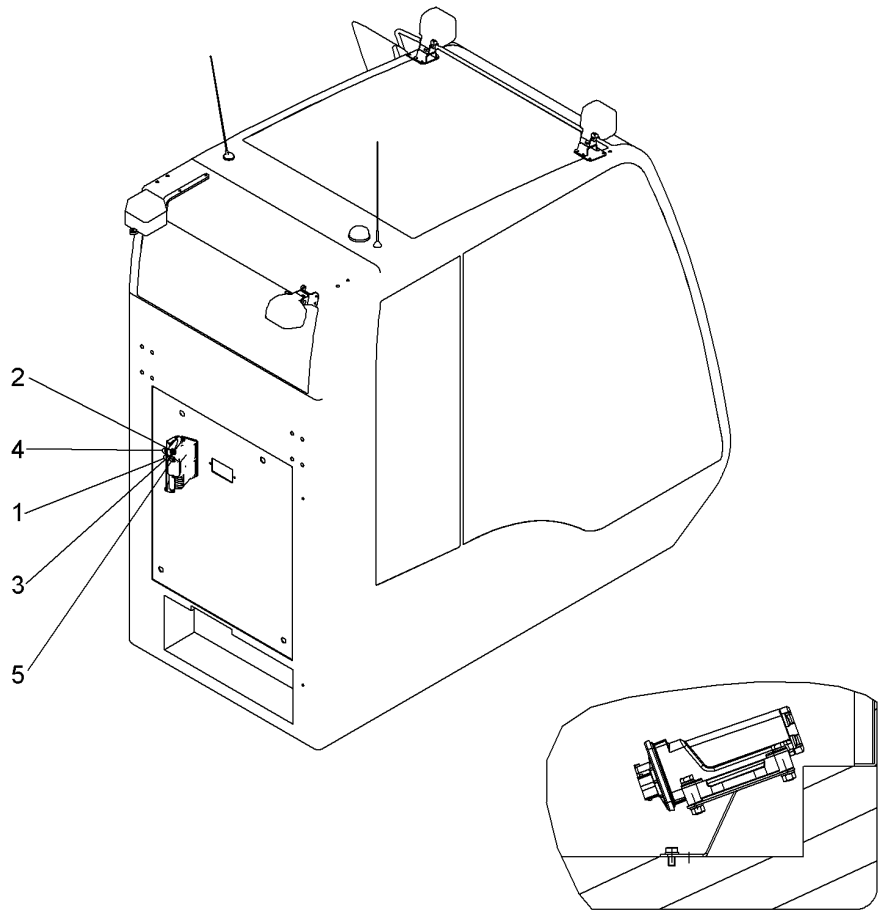

Pos.	Item	Quantity	Description	Bezeichnung	Serie	K
1	11223086	1	WP	WP		
2	10538797	4	HEX SCREW ISO 4017 M6X30 A4-70	SECHSKANTSCHRAUBE		
3	420000414	10	WASHER ISO 7089 6 A4	SCHEIBE		
4	411517114	4	HEX NUT ISO 4032 M6 A4-70	SECHSKANTMUTTER		
5	485557714	2	HEX SCREW ISO 4017 M6X12 A4-70	SECHSKANTSCHRAUBE		

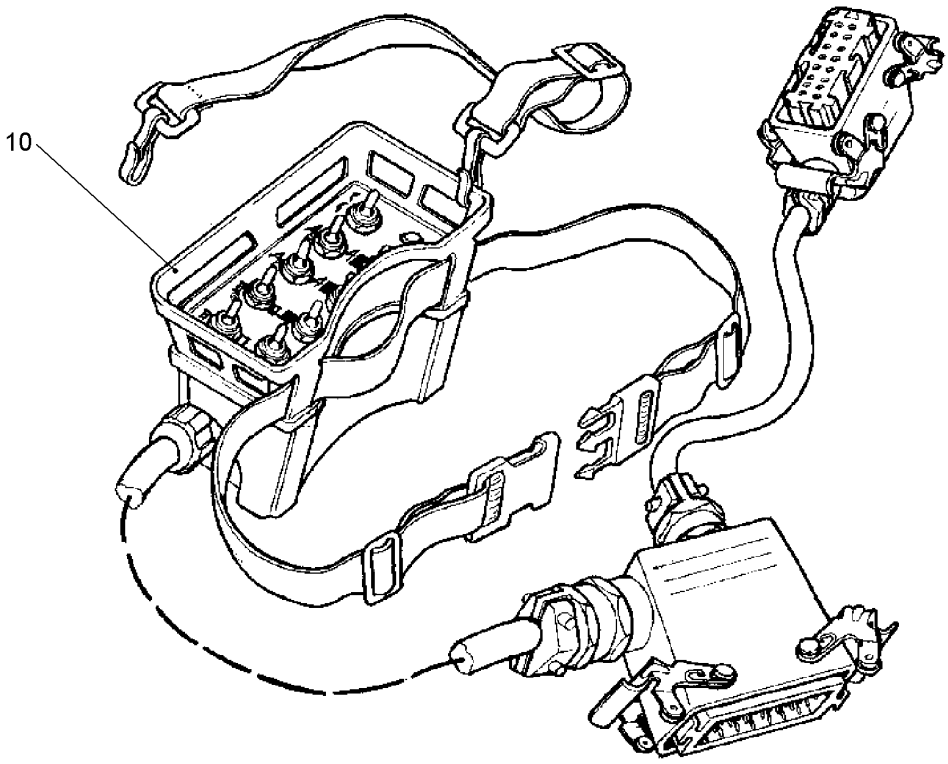

Pos.	Item	Quantity	Description	Bezeichnung	Serie	K
10	11236557	1	CONTROL CONSOLE	STEUERPULT		

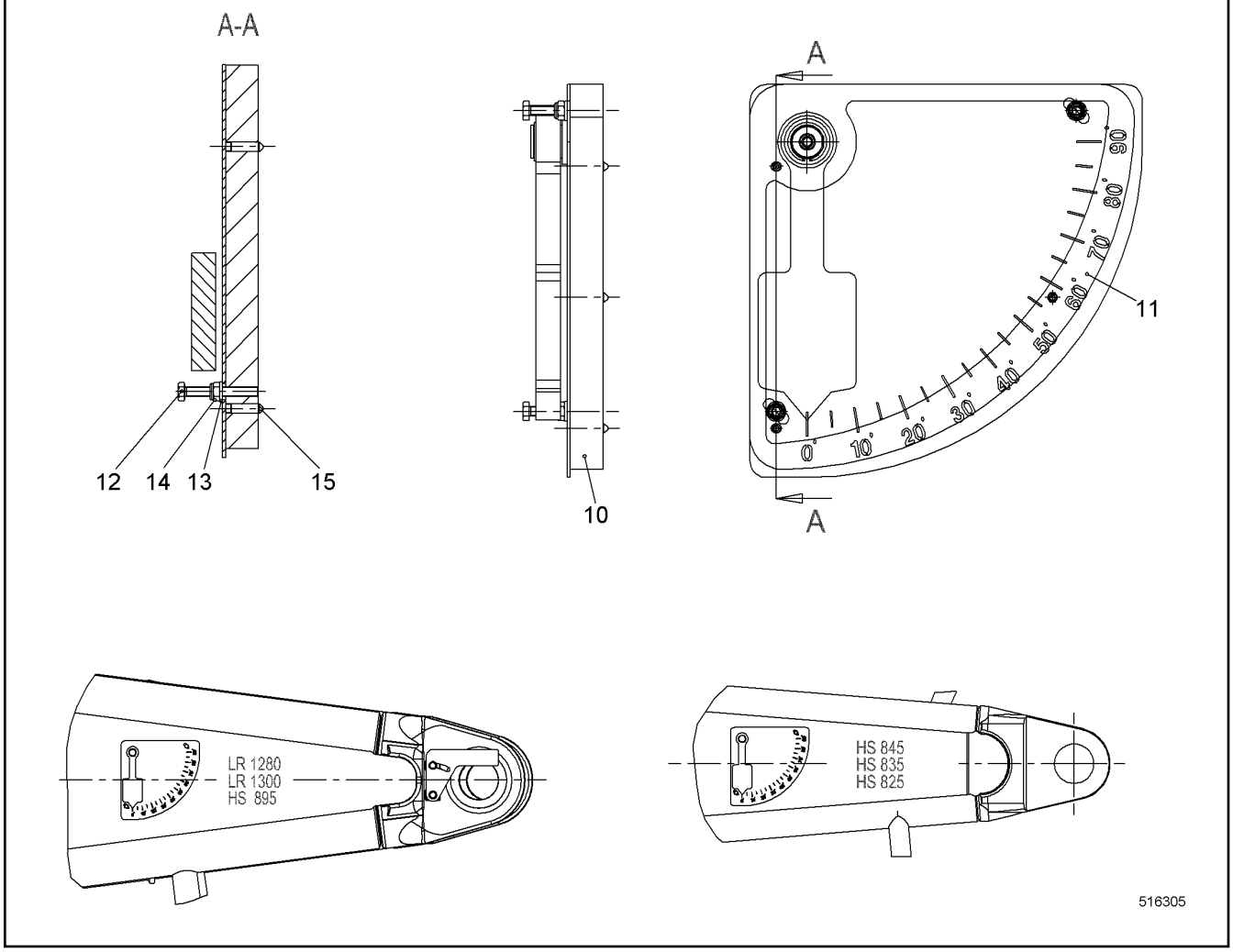

Pos.	Item	Quantity	Description	Bezeichnung	Serie	K
10	11215379	1	SHEET	PLATTE		
11	919058414	1	ANGLE INDICATION ⇨ ❑ 540	WINKELANZEIGE		
12	10538799	2	HEX SCREW ISO 4017 M6X45 A4-70	SECHSKANTSCHRAUBE		
13	420000414	2	WASHER ISO 7089 6 A4	SCHEIBE		
14	10540492	2	HEX NUT ISO 10511 M6 A4	SECHSKANTMUTTER		
15	404601014	3	GRUB SCREW DIN 914 M6X20 45H	GEWINDESTIFT		

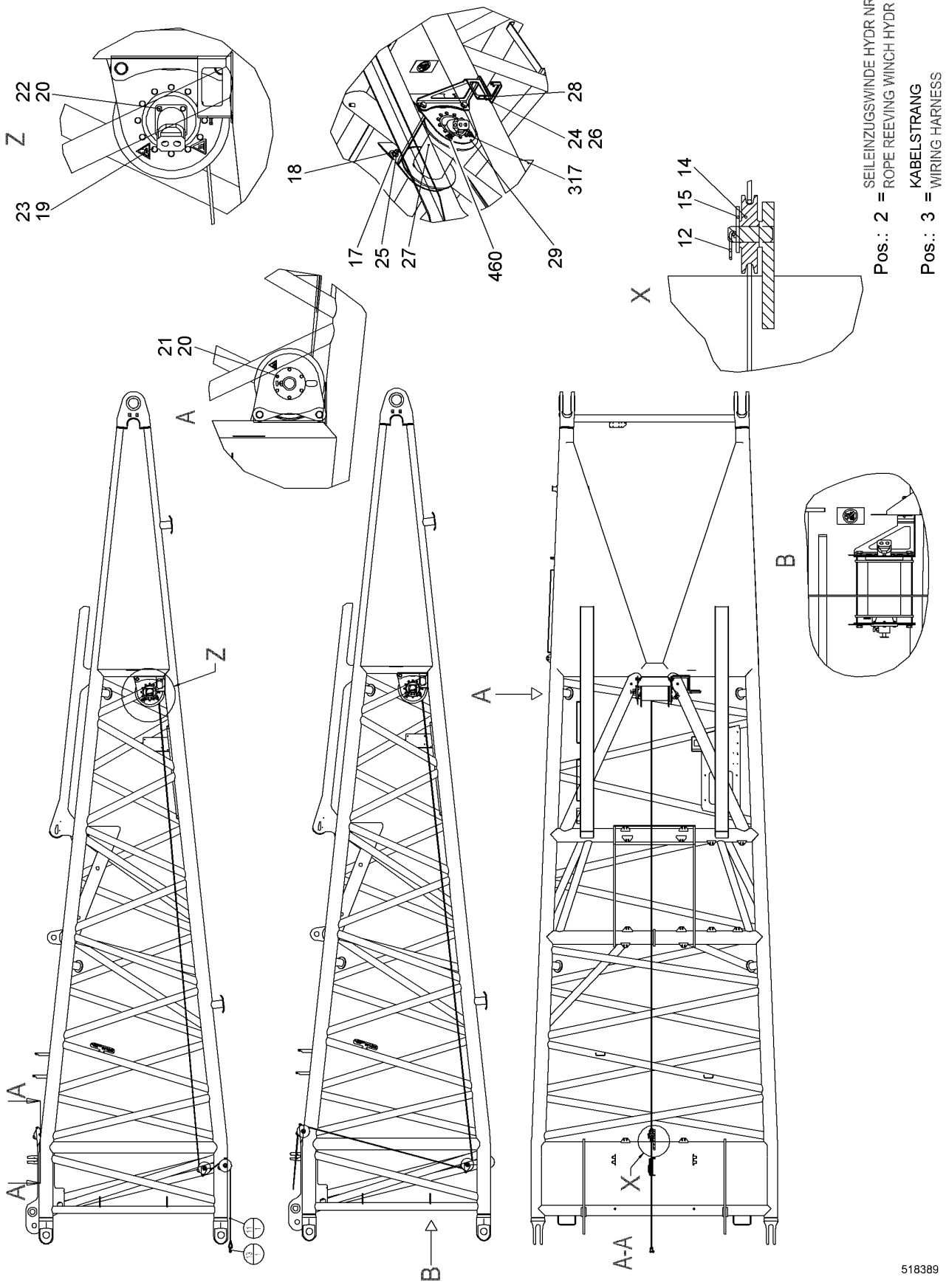

24.5.2017 518389	**138376_ETK_001**	617 (1/2)
LIEBHERR	**ROPE LUG CPL RFK** **SEILEINZIEHWINDE KPL NRS**	**10 51 743 9**

Pos.	Item	Quantity	Description	Bezeichnung	Serie	K
2	10542516	1	ROPE REEVING WINCH HYDR RFK ⇨ ❑ 619	SEILEINZUGSWINDE HYDR NRS		
3	10226574	1	WIRING HARNESS	KABELSTRANG		
4	10524392	1	HOSE LIST ⇨ ❑ 622	SCHLAUCHLISTE		
11	774762314	1	ROPE	SEIL		
12	433105414	2	RETAINING SPRING 4.5 MM	SICHERUNGSFEDER		
13	773930114	1	SHACKLE	SCHAEKEL		
14	967216103	2	ROPE PULLEY CPL ⇨ ❑ 623	SEILROLLE KPL		
15	385031714	2	WP	WP		
17	10544174	8	WASHER ISO 7089 20	SCHEIBE		
18	10544157	4	HEX NUT DIN 985 M20 10	SECHSKANTMUTTER		
19	406511914	12	HEX SCREW ISO 4017 M10X25 A4-70	SECHSKANTSCHRAUBE		
20	10447017	10	LOCKING RING 8	SICHERUNGSRING		
21	406501314	6	HEX SCREW ISO 4017 M8X30 A4-70	SECHSKANTSCHRAUBE		
22	406501414	4	HEX SCREW ISO 4017 M8X25 A4-70	SECHSKANTSCHRAUBE		
23	10447016	12	LOCKING RING 10	SICHERUNGSRING		
24	406532614	2	HEX SCREW ISO 4017 M6X20 A4-70	SECHSKANTSCHRAUBE		
25	10543922	4	HEX SCREW ISO 4017 M20X50 10.9	SECHSKANTSCHRAUBE		
26	420000414	2	WASHER ISO 7089 6 A4	SCHEIBE		
27	592069414	1	WINCH ⇨ ❑ 624	WINDE		
28	994001014	1	VALVE MOUNTING	VENTILHALTERUNG		
29	918678214	1	WINCH FRAME	WINDENRAHMEN		
317	773195214	1	SIGN	SCHILD		
460	773195614	2	NAMEPLATE UVV	SCHILD UVV		

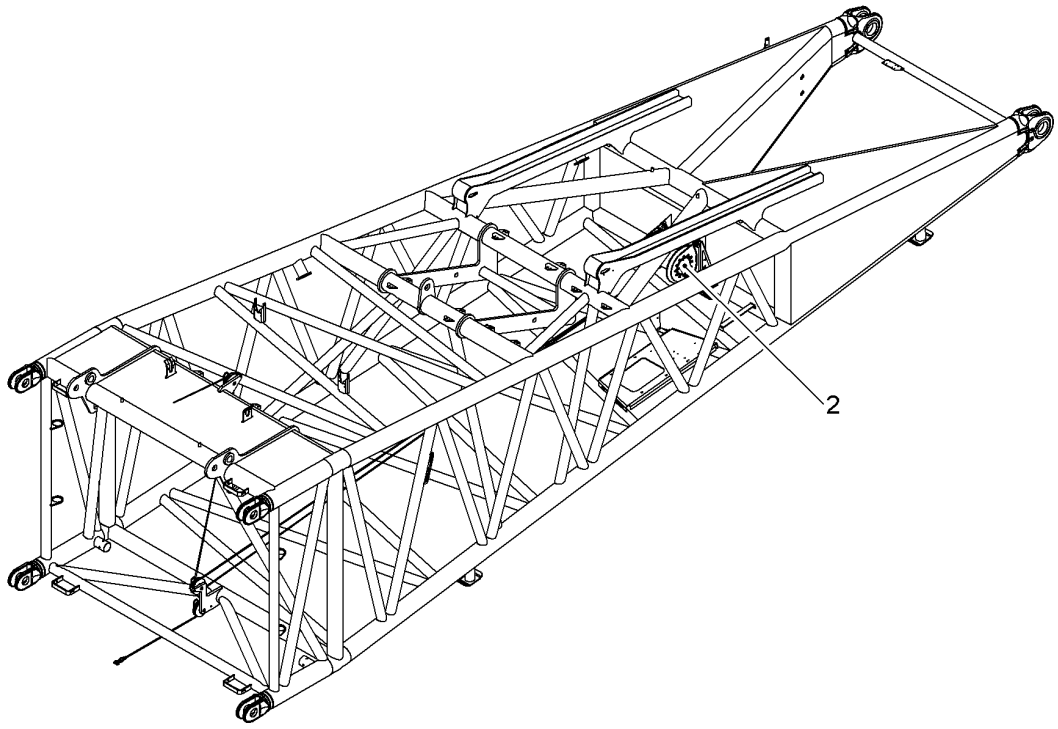

Pos.	Item	Quantity	Description	Bezeichnung	Serie	K
2	10517262	1	TUBING HYDR ⇨ ❑ 620	VERROHRUNG HYDR		

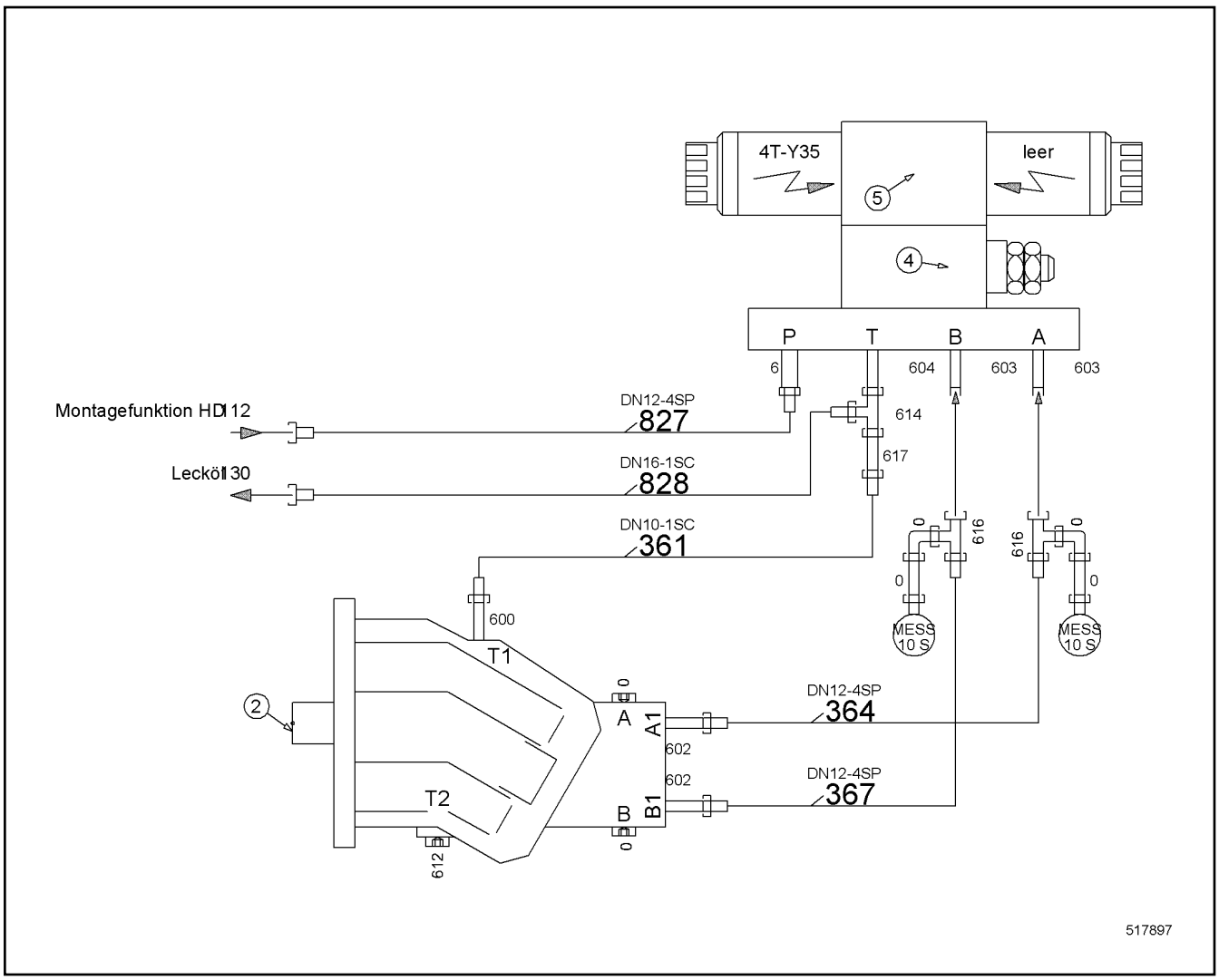

Pos.	Item	Quantity	Description	Bezeichnung	Serie	K
2	510232214	1	OIL MOTOR ⇨ ❑ 621	OELMOTOR		
3	511455014	1	CONNECTING PLATE	ANSCHLUSSPLATTE		
4	511467914	1	PRESSURE LIMITING VALVE	DRUCKBEGRENZUNGSVENTIL		
5	510427214	1	DIRECTIONAL CONTROL VALVE	WEGEVENTIL		
6	929796914	1	RESTRICTOR BODY	DROSSELKOERPER		
7	714002114	1	MAIN JET SOLEX 1.2MM	HAUPTDUESE SOLEX		
8	10099300	1	SIGN	SCHILD		
600	471039708	1	FITTING	VERSCHRAUBUNG		
602	471033014	2	FITTING	VERSCHRAUBUNG		
603	471033214	2	FITTING	VERSCHRAUBUNG		
604	247009702	1	FITTING	VERSCHRAUBUNG		
612	790259414	1	FITTING	VERSCHRAUBUNG		
613	510664814	2	GAUGE CONNECTION	MESSSTUTZEN		
614	247128502	1	FITTING	VERSCHRAUBUNG		
615	485433314	2	FITTING	VERSCHRAUBUNG		
616	7407098	2	FITTING	VERSCHRAUBUNG		
617	485436414	1	FITTING	VERSCHRAUBUNG		

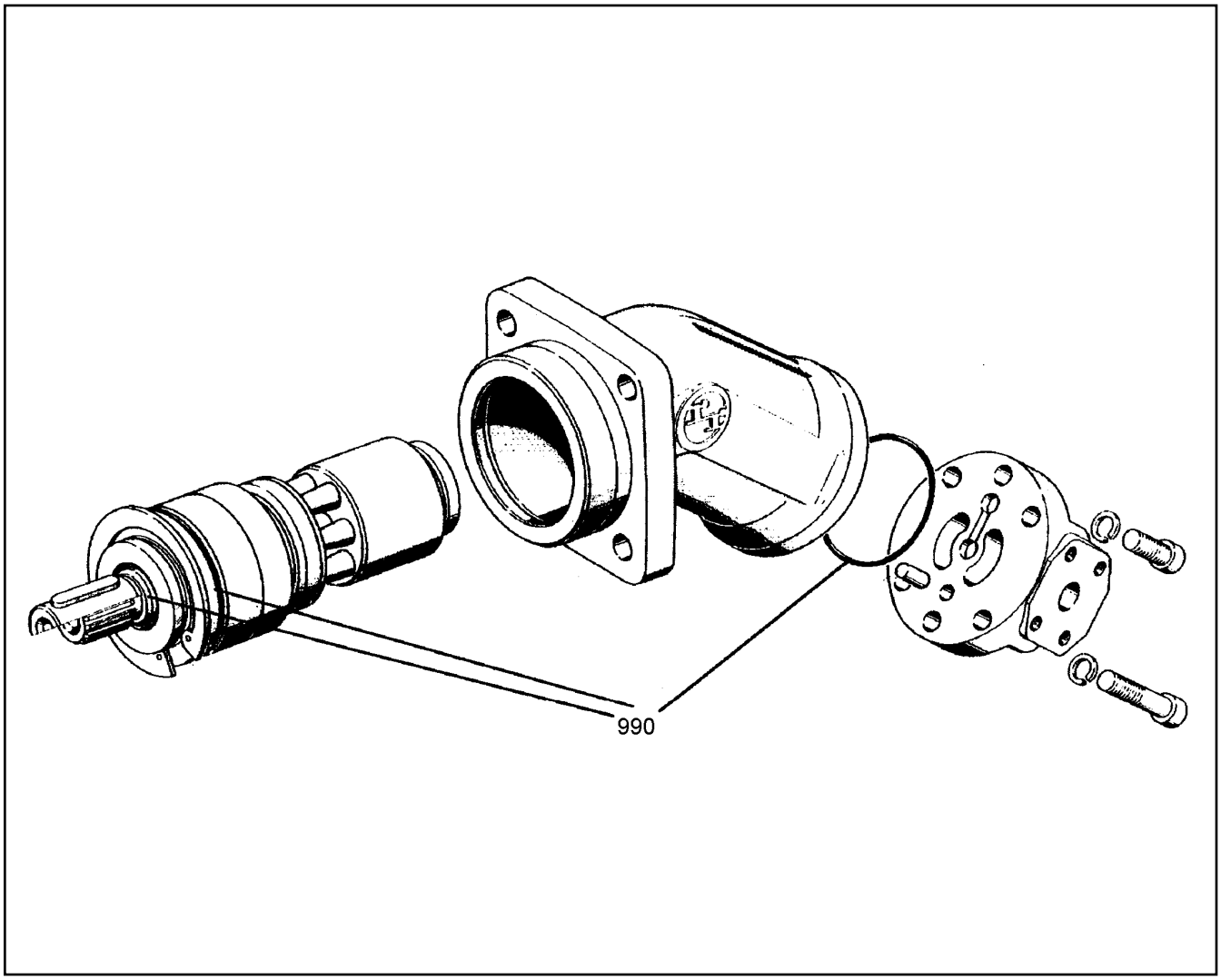

Pos.	Item	Quantity	Description	Bezeichnung	Serie	K
111	7024273	1	CYLINDER	ZYLINDER		
113	7024275	1	CENTER STUD	MITTELZAPFEN		
115	7024277	14	STEEL GASKET	STAHLDICHTRING		
116	570114908	1	SPRING SUPPORT	FEDERTELLER		
117	7024282	4	DISC SPRING	TELLERFEDER		
990	981967114	1	SEALING SET CPL	DS KPL		

ACHTUNG !
ATTENTION !
ATTENTION !
ATENCIÓN !
ATENÇÃO !
ВНИМАНИЕ

Für Schlauchbestellungen kann über die Schlauchnummer, in der entsprechenden Schlauchliste, die Identnummer festgestellt werden.

For ordering flexible hoses you can find the identification number through the hose-number in the corresponding hose-list.

Pour des ordres de tuyau flexible le nombre d'identification on voit dans la liste de tuyau flexible correspondente.

Para el pedido de manguera, indicar el número de identificación de la manguera de la lista respectiva.

Para se encomendar uma mangueira, consulte o número de identificaçao na respectiva lista de mangueiras.

Для оформления заказов на шланги/рукавы идент. № может быть определен при помощи номера шланга/рукава, указанного в соответствующем перечне шлангов/рукавов.

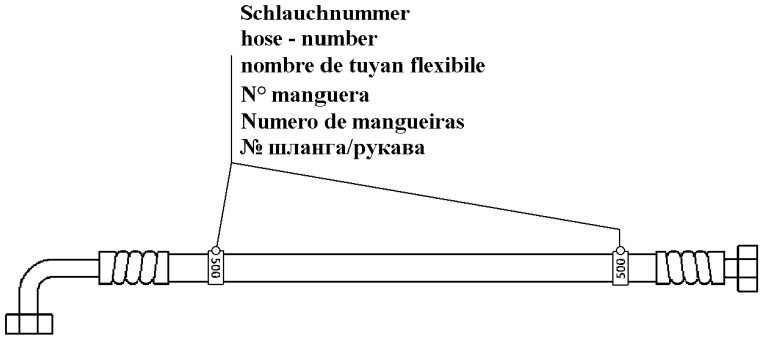

500000

Pos.	Item	Quantity	Description	Bezeichnung	Serie	K
1	10518558	1	ADHESIVE LABEL	HAFTETIKETTE		
2	10518558	5	ADHESIVE LABEL	HAFTETIKETTE		
361	995285414	1	HOSE CPL	SCHLAUCH KPL		
364	991205314	1	HOSE CPL	SCHLAUCH KPL		
367	991195514	1	HOSE CPL	SCHLAUCH KPL		
827	918849914	1	HOSE CPL	SCHLAUCH KPL		
828	929443814	1	HOSE CPL	SCHLAUCH KPL		

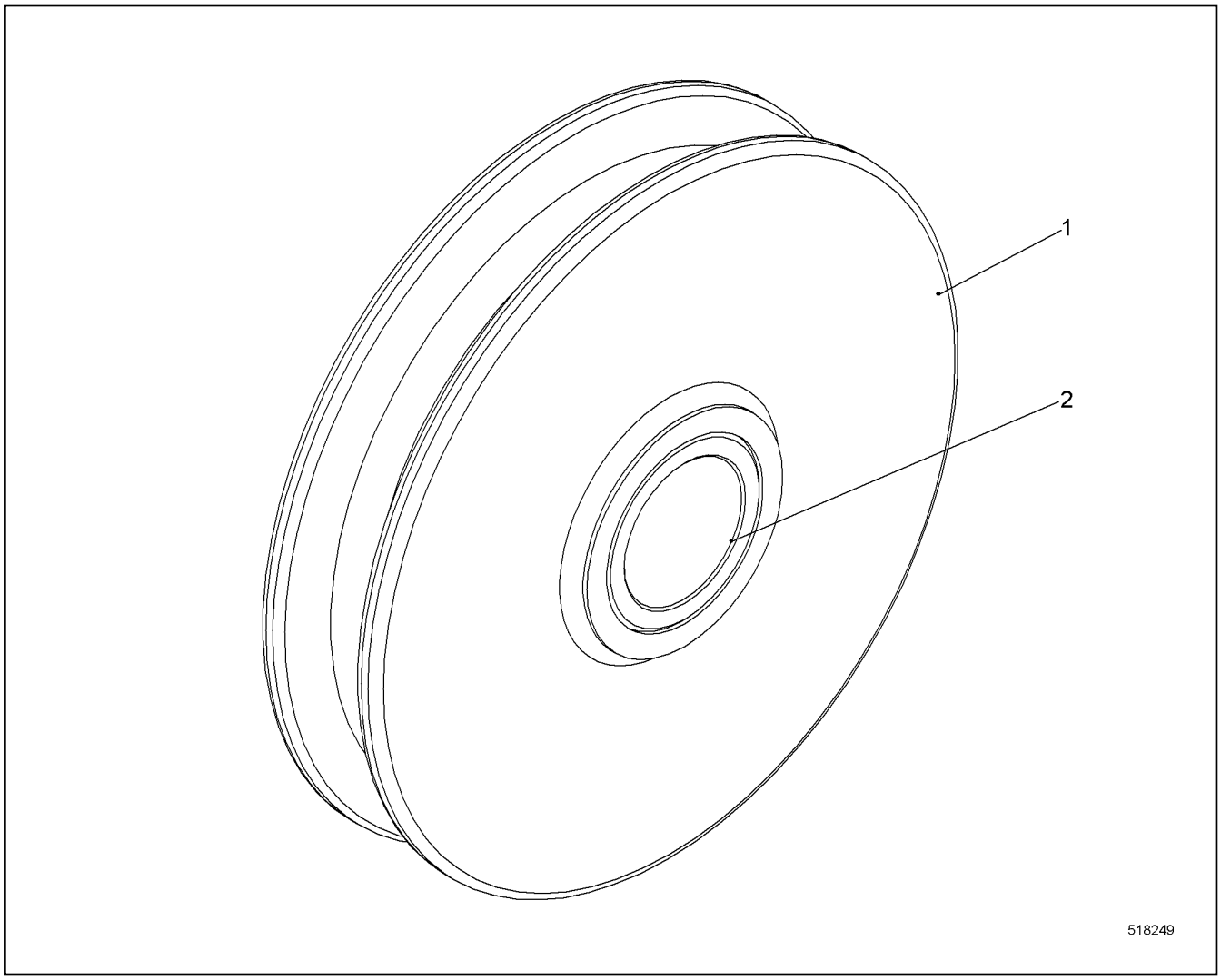

Pos.	Item	Quantity	Description	Bezeichnung	Serie	K
1	967217003	1	ROPE PULLEY	SEILROLLE		
2	967216303	1	BUSHING 30/40X38 GZ-CUSN7ZNPB	BUCHSE		

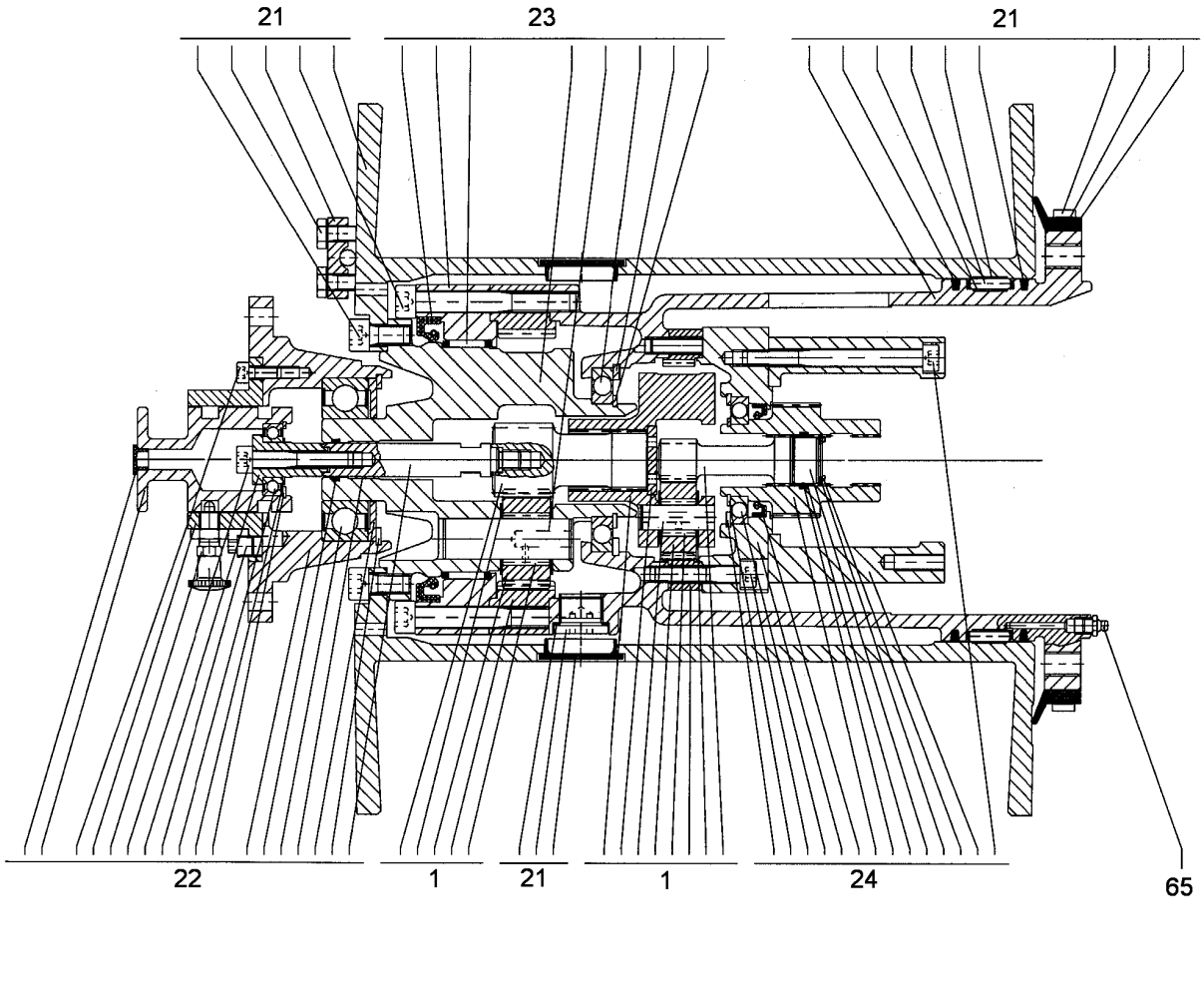

Pos.	Item	Quantity	Description	Bezeichnung	Serie	K
1	540270114	1	PLANETARY STAGE ⇨ ❑ 625	PLANETENSTUFE		
21	540270214	1	ROPE DRUM CPL ⇨ ❑ 626	SEILTROMMEL KPL		
22	540270314	1	FLANGE CPL ⇨ ❑ 627	FLANSCH KPL		
23	540270414	1	POWER TAKE-OFF CPL ⇨ ❑ 628	ABTRIEB KPL		
24	540270514	1	DRIVE UNIT CPL ⇨ ❑ 629	ANTRIEB KPL		
65	774301101	1	HYDRAULIC-TYPE LUBRICAT.NIPPLE	KEGELSCHMIERNIPPEL		

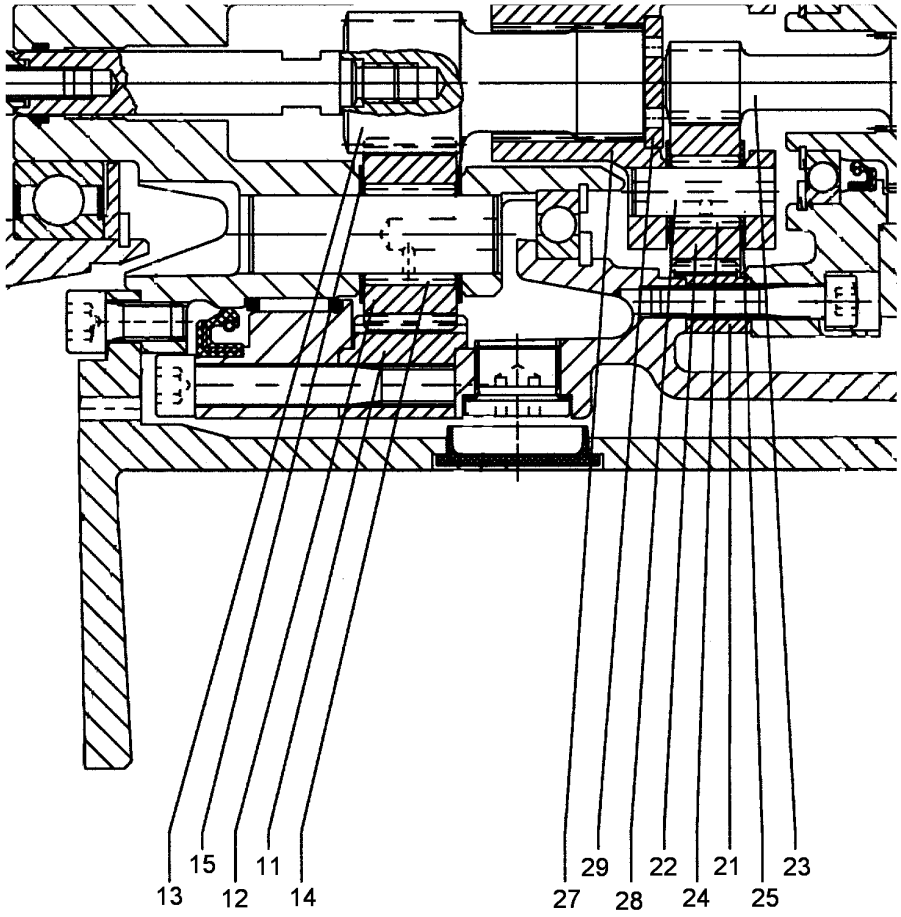

Pos.	Item	Quantity	Description	Bezeichnung	Serie	K
11	512406114	1	INNER WHEEL	INNENRAD		
12	540270614	3	PLANET WHEEL	PLANETENRAD		
13	540270714	1	SUN WHEEL	SONNENRAD		
14	540244214	72	NEEDLES	NADELN		
15	540270814	6	AXIAL WASHER	AXIALSCHEIBE		
21	512406214	1	INNER WHEEL	INNENRAD		
22	540271014	3	PLANET WHEEL	PLANETENRAD		
23	540270914	1	SUN WHEEL	SONNENRAD		
24	540271114	48	NEEDLES	NADELN		
25	540271214	6	WASHER	SCHEIBE		
27	540271314	1	PLANETARY CARRIER	PLANETENTRAEGER		
28	540271414	3	PLANETARY WHEEL AXLE	PLANETENACHSE		
29	540271514	1	WASHER	SCHEIBE		

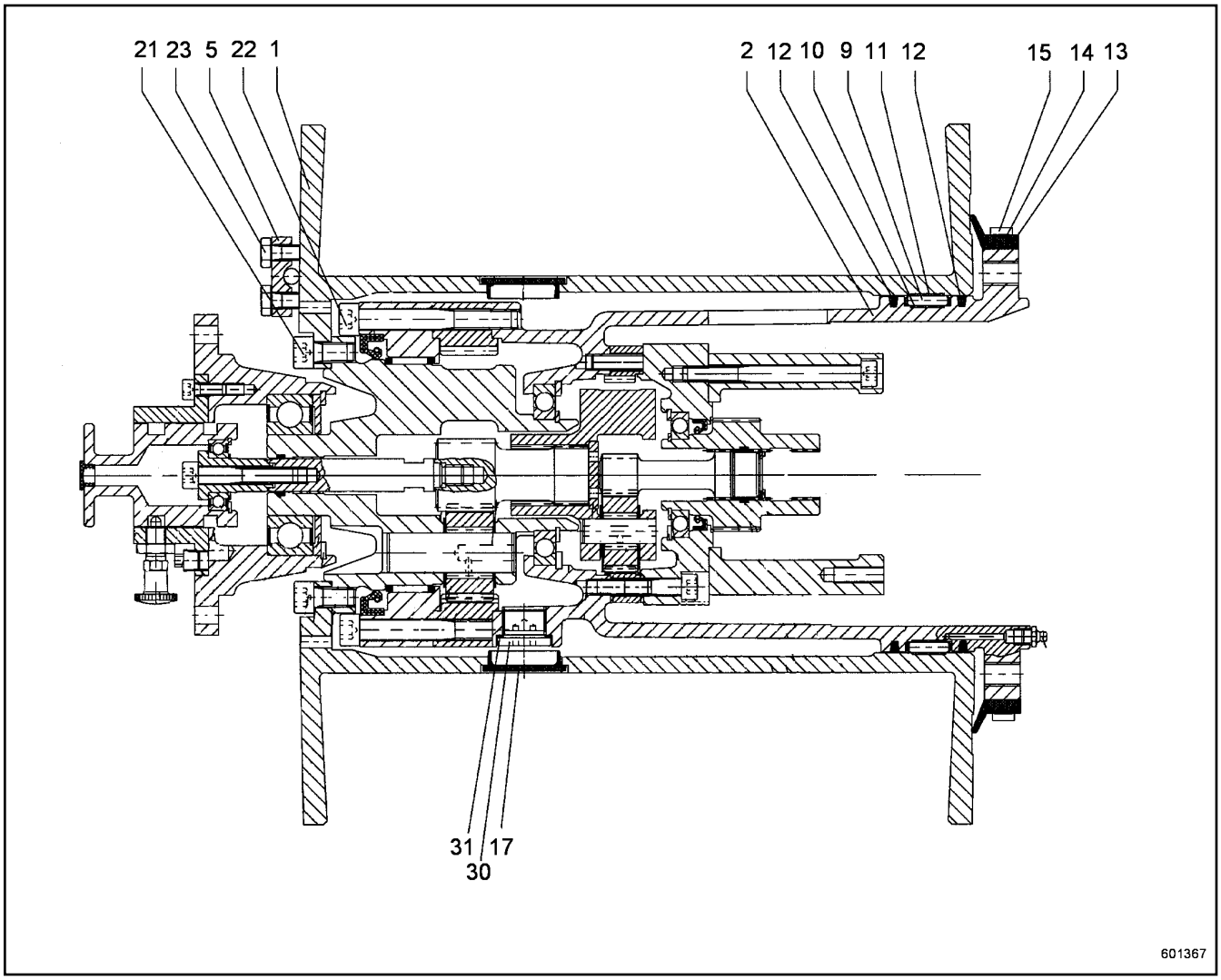

Pos.	Item	Quantity	Description	Bezeichnung	Serie	K
1	540273314	1	ROPE DRUM	SEILTROMMEL		
2	540271614	1	TERMINAL HOUSING	ENDGEHAEUSE		
5	540271714	1	ROPE CLAMP	SEILKLEMME		
9	501532014	1	FLAT CAGE BEARING	FLACHKAEFIG		
10	11278605	1	BEARING	LAGER		
12	10585445	2	FELT STRIP	FILZSTREIFEN		
13	501507014	1	PROFILE CORD	PROFILSCHNUR		
14	501507214	1	FIXING BAND	BEF BAND		
15	501507314	1	SLEEVE 8X0.4	HUELSE		
21	404208814	8	SOCKET HEAD SCREW ISO 4762 M10X20 A4-7	ZYLINDERSCHRAUBE		
22	10539508	6	SOCKET HEAD SCREW ISO 4762 M10X80 A4-7	ZYLINDERSCHRAUBE		
23	485556314	4	SOCKET HEAD SCREW ISO 4762 M8X25 A4-7	ZYLINDERSCHRAUBE		
30	404101608	2	SCREW PLUG DIN 908 M22X1.5 ST	VERSCHLUSSSCHRAUBE		
31	710104514	2	SEALING RING	DICHTRING		

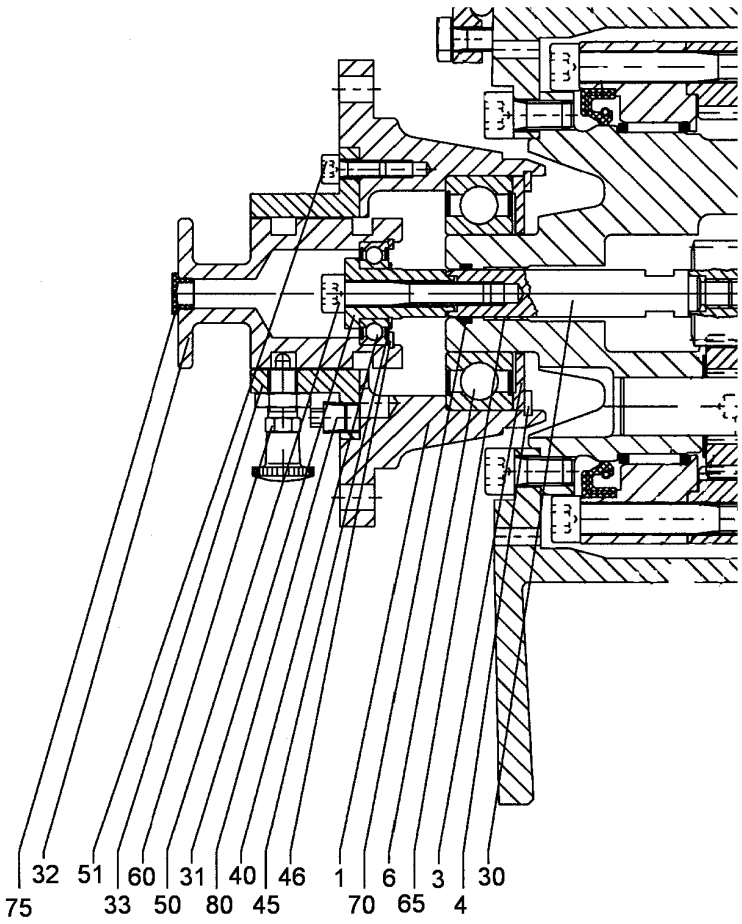

Pos.	Item	Quantity	Description	Bezeichnung	Serie	K
1	540271814	1	FLANGE	FLANSCH		
3	540271914	1	WASHER	SCHEIBE		
4	4281013	1	LOCKING RING DIN 472 80X2.5	SICHERUNGSRING		
6	745906614	1	DEEP GROOVE BALL BEARING	RILLENKUGELLAGER		
30	540272014	1	SHAFT	WELLE		
31	540272114	1	PULL ROD	ZUGSTANGE		
32	540272214	1	SWITCHING JACKET	SCHALTHUELSE		
33	540272314	1	NOTCHED SLEEVE	RASTHUELSE		
40	745128314	1	DEEP GROOVE BALL BEARING	RILLENKUGELLAGER		
45	428001014	1	LOCKING RING DIN 471 17X1	SICHERUNGSRING		
46	428100914	1	LOCKING RING DIN 472 35X1.5	SICHERUNGSRING		
50	10539486	1	SOCKET HEAD SCREW ISO 4762 M8X50 A4-7	ZYLINDERSCHRAUBE		
51	404250914	3	SOCKET HEAD SCREW ISO 4762 M6X16 A4-7	ZYLINDERSCHRAUBE		
60	540272414	1	STOP BOLT M10X1	RASTBOLZEN		
70	726469014	1	O-RING	O-RING		
80	403900101	1	SCREW PLUG DIN 906 M10X1 ST	VERSCHLUSSSCHRAUBE		

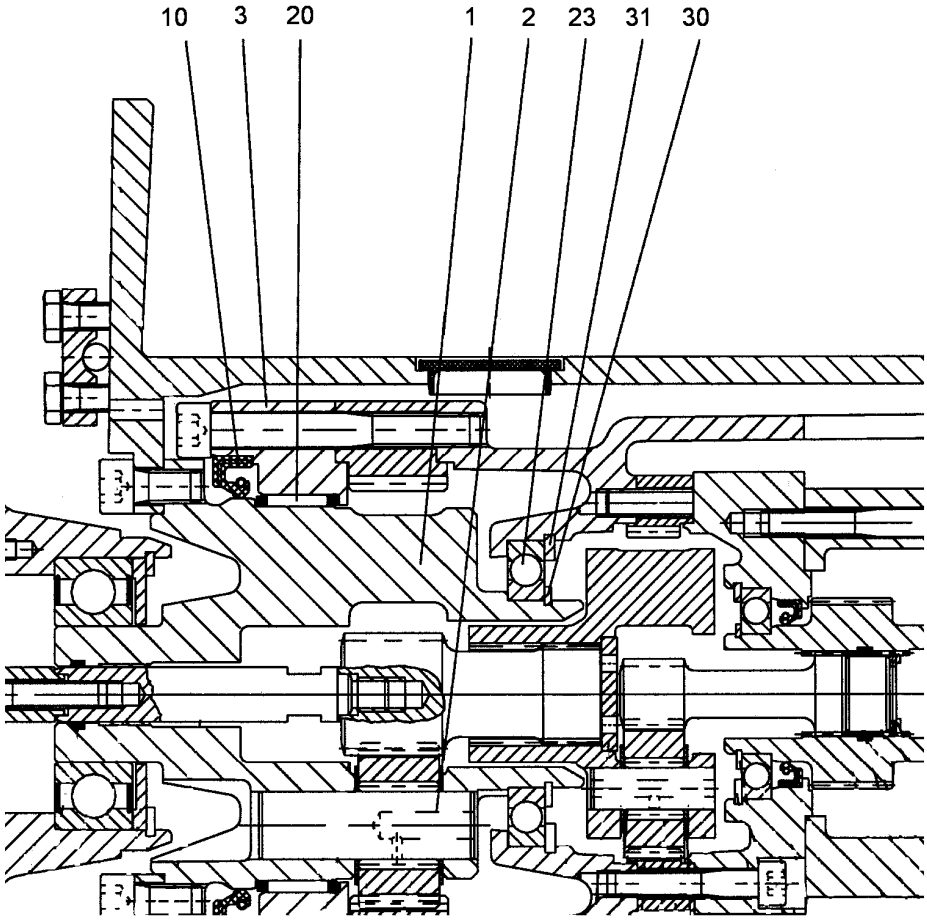

Pos.	Item	Quantity	Description	Bezeichnung	Serie	K
1	540272514	1	PLANETARY CARRIER	PLANETENTRAEGER		
2	540272614	3	PLANETARY WHEEL AXLE	PLANETENACHSE		
3	540272714	1	BEARING RING	LAGERRING		
10	710031014	1	SEALING RING	DICHTRING		
20	747462814	1	NEEDLE CAGE	NADELKAEFIG		
23	745907514	1	DEEP GROOVE BALL BEARING	RILLENKUGELLAGER		
30	428004514	1	LOCKING RING DIN 471 55X2	SICHERUNGSRING		
31	4281016	1	LOCKING RING DIN 472 90X3	SICHERUNGSRING		

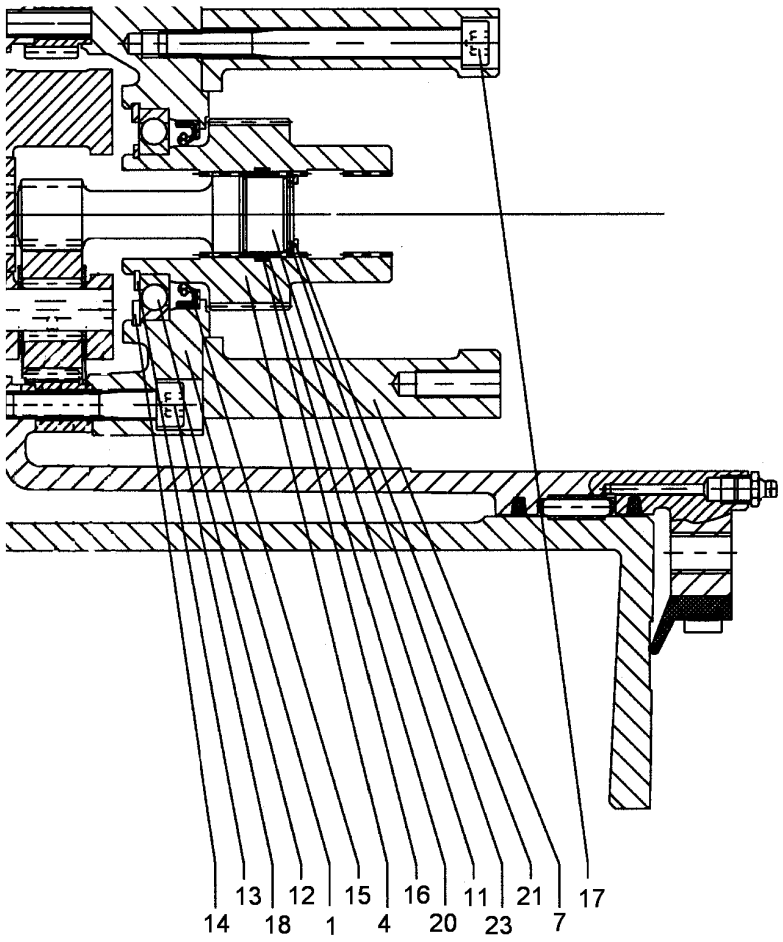

Pos.	Item	Quantity	Description	Bezeichnung	Serie	K
1	540272814	1	BRAKE FLANGE	BREMSFLANSCH		
4	540272914	1	DRIVE SLEEVE	ANTRIEBSHUELSE		
7	540273014	1	MOTOR FLANGE	MOTORFLANSCH		
11	540273114	1	WASHER	SCHEIBE		
12	745194714	1	DEEP GROOVE BALL BEARING	RILLENKUGELLAGER		
13	428002914	1	LOCKING RING DIN 471 35X1.5	SICHERUNGSRING		
14	4281037	1	LOCKING RING DIN 472 62X2	SICHERUNGSRING		
15	710020114	1	SEALING RING	DICHTRING		
16	726424214	1	O-RING	O-RING		
17	10514797	6	SOCKET HEAD SCREW ISO 4762 M8X90 A4-7	ZYLINDERSCHRAUBE		
18	10539485	6	SOCKET HEAD SCREW ISO 4762 M8X45 A4-7	ZYLINDERSCHRAUBE		
20	540273214	1	SPIRAL BACK-UP RING	SPIRALBACKRING		
21	428107714	1	LOCKING RING DIN 472 23X1.2	SICHERUNGSRING		
23	422014001	3	SHIM RING DIN 988 16X22X1 ST	PASSSCHEIBE		

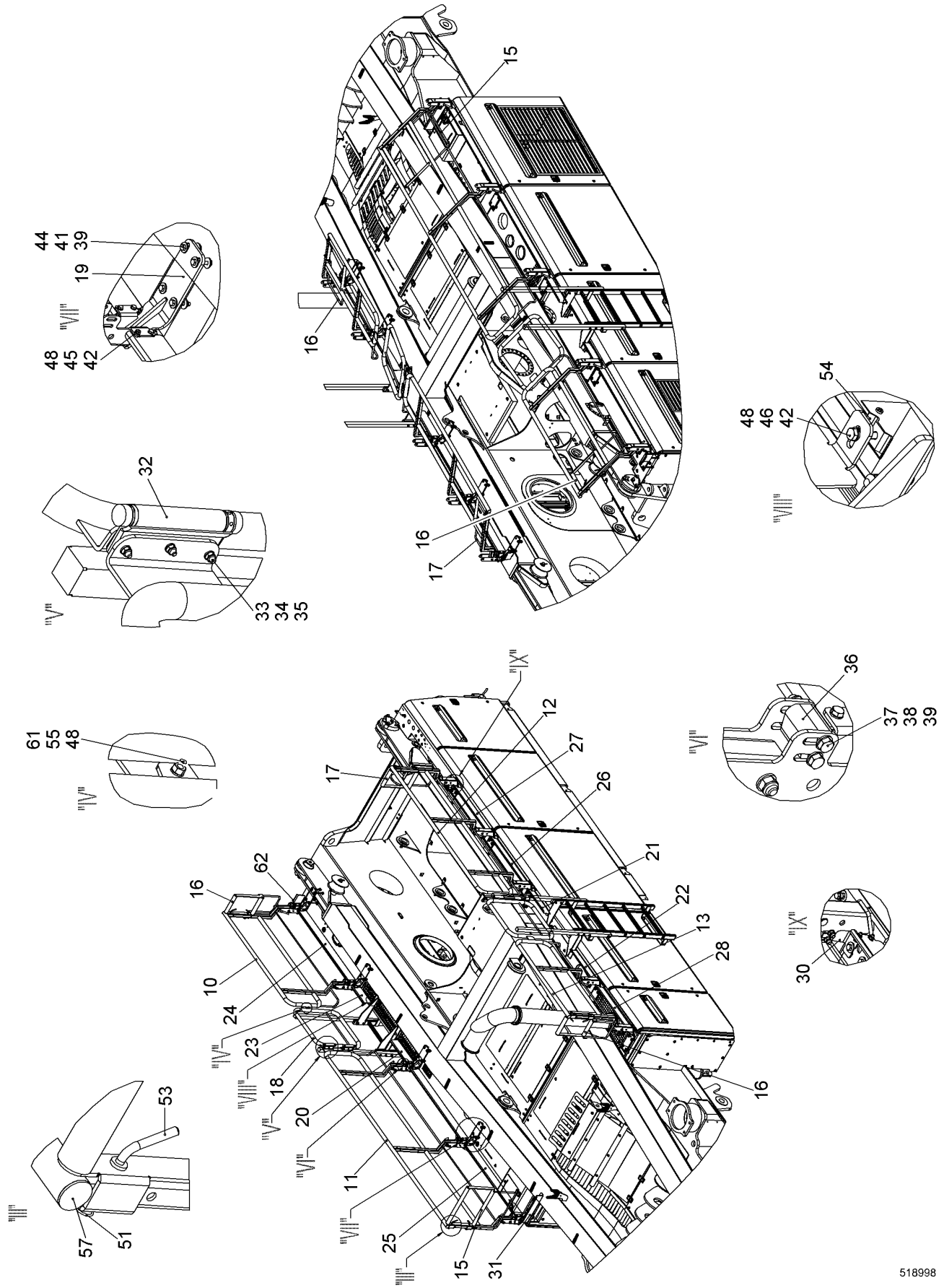

24.5.2017 518998 LIEBHERR	**138376_ETK_001** **ROOF RAILING RFK** **DACHGELAENDER NRS**	❑ 630 (1/4) **10 55 372 1**

Pos.	Item	Quantity	Description	Bezeichnung	Serie	K
10	10585923	1	RAILING ST.CONST.	GELAENDER SCHWK		
11	10585924	1	RAILING ST.CONST.	GELAENDER SCHWK		
12	10585925	1	RAILING ST.CONST.	GELAENDER SCHWK		
13	10585926	1	RAILING ST.CONST.	GELAENDER SCHWK		
15	10574837	1	BRACKET ST.CONST.	BUEGEL SCHWK		
16	10585933	2	BRACKET ST.CONST.	BUEGEL SCHWK		
17	10585936	1	BRACKET ST.CONST.	BUEGEL SCHWK		
18	10559163	2	RAILING ST.CONST.	GELAENDER SCHWK		
19	10349402	10	RAILING FOOT	GELAENDERFUSS		
20	10585909	1	FOOT STRIP	FUSSLEISTE		
21	10585910	1	FOOT STRIP	FUSSLEISTE		
22	10585911	1	FOOT STRIP	FUSSLEISTE		
23	10585912	1	FOOT STRIP	FUSSLEISTE		
24	10585913	2	FOOT STRIP	FUSSLEISTE		
25	10585914	1	FOOT STRIP	FUSSLEISTE		
26	10585915	1	FOOT STRIP	FUSSLEISTE		
27	10585916	1	FOOT STRIP	FUSSLEISTE		
28	10585917	1	FOOT STRIP	FUSSLEISTE		
30	10585919	1	FOOT STRIP	FUSSLEISTE		
31	10585920	1	FOOT STRIP	FUSSLEISTE		
32	10509153	4	SPIRAL SPRING HINGE PLATE	SPIRALFEDER TUERBAND		
33	408606314	24	COUNTERSUNK SCREW DIN 7991 M6X20 A4-7	SENKSCHRAUBE		

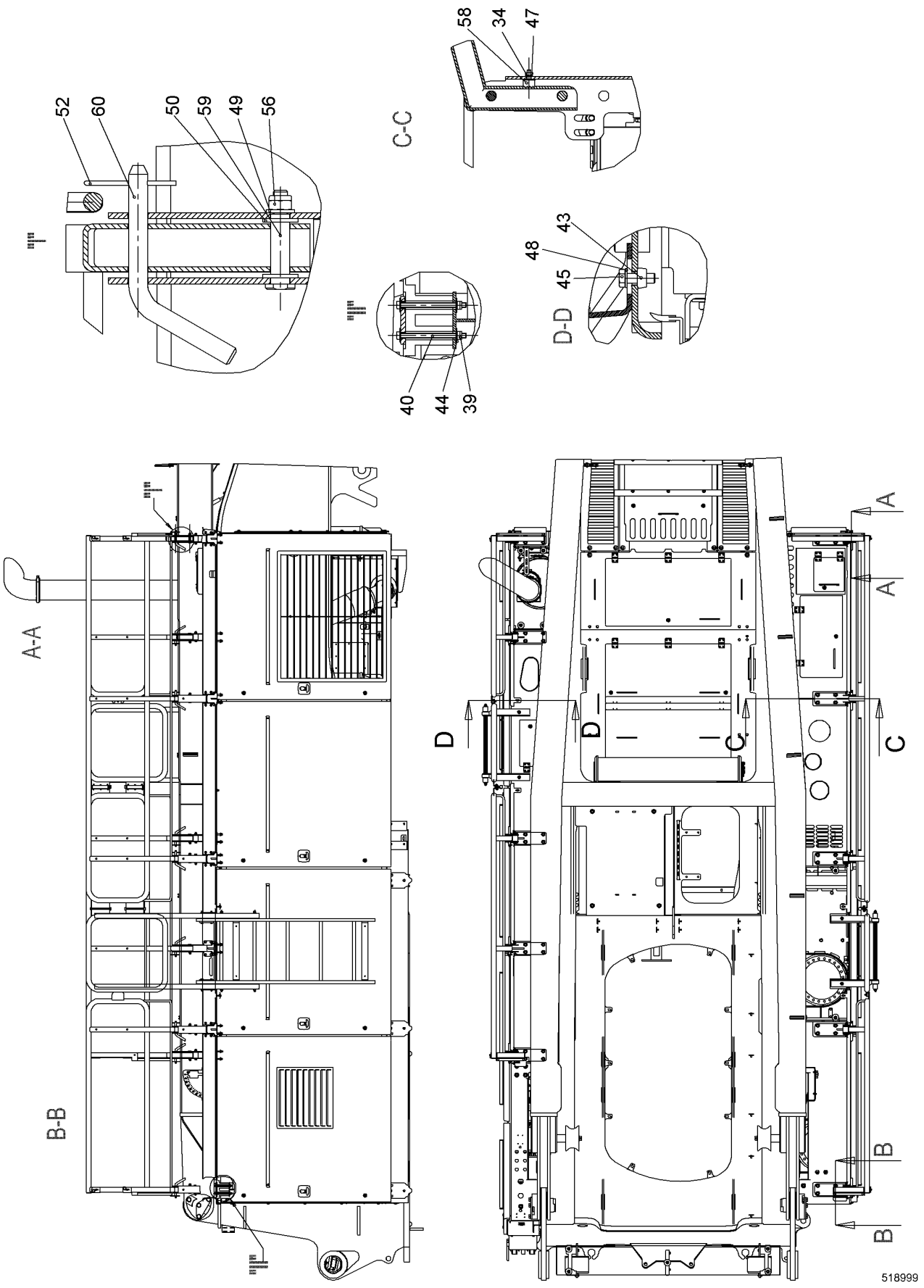
52
60
50
59
49
56
I
C-C
58
34
47
II
40
44
39
D-D
43
48
45
A-A
B-B
D
A
B
C
518999

Pos.	Item	Quantity	Description	Bezeichnung	Serie	K
34	420000414	34	WASHER ISO 7089 6 A4	SCHEIBE		
35	10540492	24	HEX NUT ISO 10511 M6 A4	SECHSKANTMUTTER		
37	420001114	32	WASHER ISO 7089 10 A4	SCHEIBE		
38	406527914	16	HEX SCREW ISO 4017 M10X80 A4-70	SECHSKANTSCHRAUBE		
39	10540494	54	HEX NUT ISO 10511 M10 A4	SECHSKANTMUTTER		
40	10538826	4	HEX SCREW ISO 4017 M10X140 A4-70	SECHSKANTSCHRAUBE		
41	10539959	34	HEX SCREW ISO 4017 M10X60 A4-70	SECHSKANTSCHRAUBE		
42	10540493	40	HEX NUT ISO 10511 M8 A4	SECHSKANTMUTTER		
43	485550114	2	CAGE NUT M8-RR-123-47	KAEFIGMUTTER		
44	10540511	78	WASHER ISO 7093-1 10 A4	SCHEIBE		
45	406501414	40	HEX SCREW ISO 4017 M8X25 A4-70	SECHSKANTSCHRAUBE		
46	406508014	2	HEX SCREW ISO 4017 M8X45 A4-70	SECHSKANTSCHRAUBE		
47	411517114	10	HEX NUT ISO 4032 M6 A4-70	SECHSKANTMUTTER		
48	420001014	82	WASHER ISO 7089 8 A4	SCHEIBE		
49	4901782	10	WASHER ISO 7089 12 A4	SCHEIBE		
50	420053101	20	WASHER AEHNL.ISO 7089 16 PA 6.6	SCHEIBE		
51	433206014	8	SPRING PLUG DIN 11024 2.5	FEDERSTECKER		
52	433206214	10	SPRING PLUG DIN 11024 4	FEDERSTECKER		
53	993352014	8	PLUG	STECKER		
54	725810414	2	RETAINING CLIP UPPER PART	HALTEKLAMMER OT		
55	726616208	2	RUBBER MOUNT	LAGER GUMMI		
56	10540495	10	HEX NUT ISO 10511 M12 A4	SECHSKANTMUTTER		
57	779016414	4	BLANKING PLUG	VERSCHLUSSSTOPFEN		
58	726616614	10	RUBBER MOUNT	LAGER GUMMI		
59	950387314	10	PIN 15.9X59X25X83 LHRD750-30;10019758	BOLZEN		
60	971230303	10	PLUG	STECKER		
61	411515014	2	HEX NUT ISO 4032 M8 A4-70	SECHSKANTMUTTER		
62	10586854	1	FOOT STRIP	FUSSLEISTE		

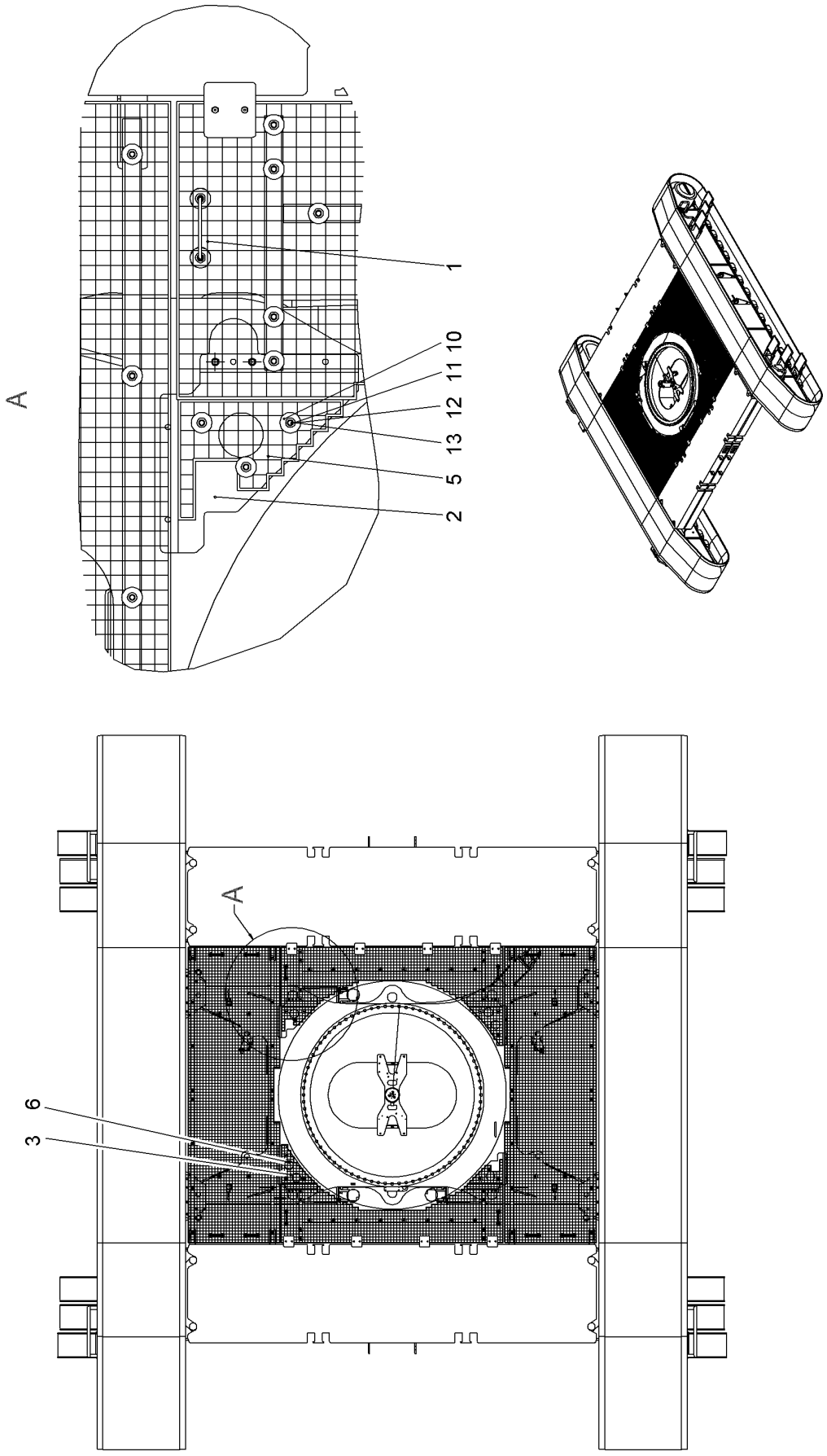
A
1
10
11
12
13
5
2
A
6
3
518402

Pos.	Item	Quantity	Description	Bezeichnung	Serie	K
1	11245755	2	PEDESTAL ⇨ ❑ 636	PODEST		
2	11245759	2	CONSOLE ST. CONST.	KONSOLE SCHWK		
3	11245922	2	CONSOLE ST. CONST.	KONSOLE SCHWK		
5	11245766	2	GRATING	GITTERROST		
6	11245767	2	GRATING	GITTERROST		
10	10098157	12	DISH	TELLER		
11	10538807	12	HEX SCREW ISO 4017 M8X50 A4-70	SECHSKANTSCHRAUBE		
12	10540493	12	HEX NUT ISO 10511 M8 A4	SECHSKANTMUTTER		
13	420001014	12	WASHER ISO 7089 8 A4	SCHEIBE		

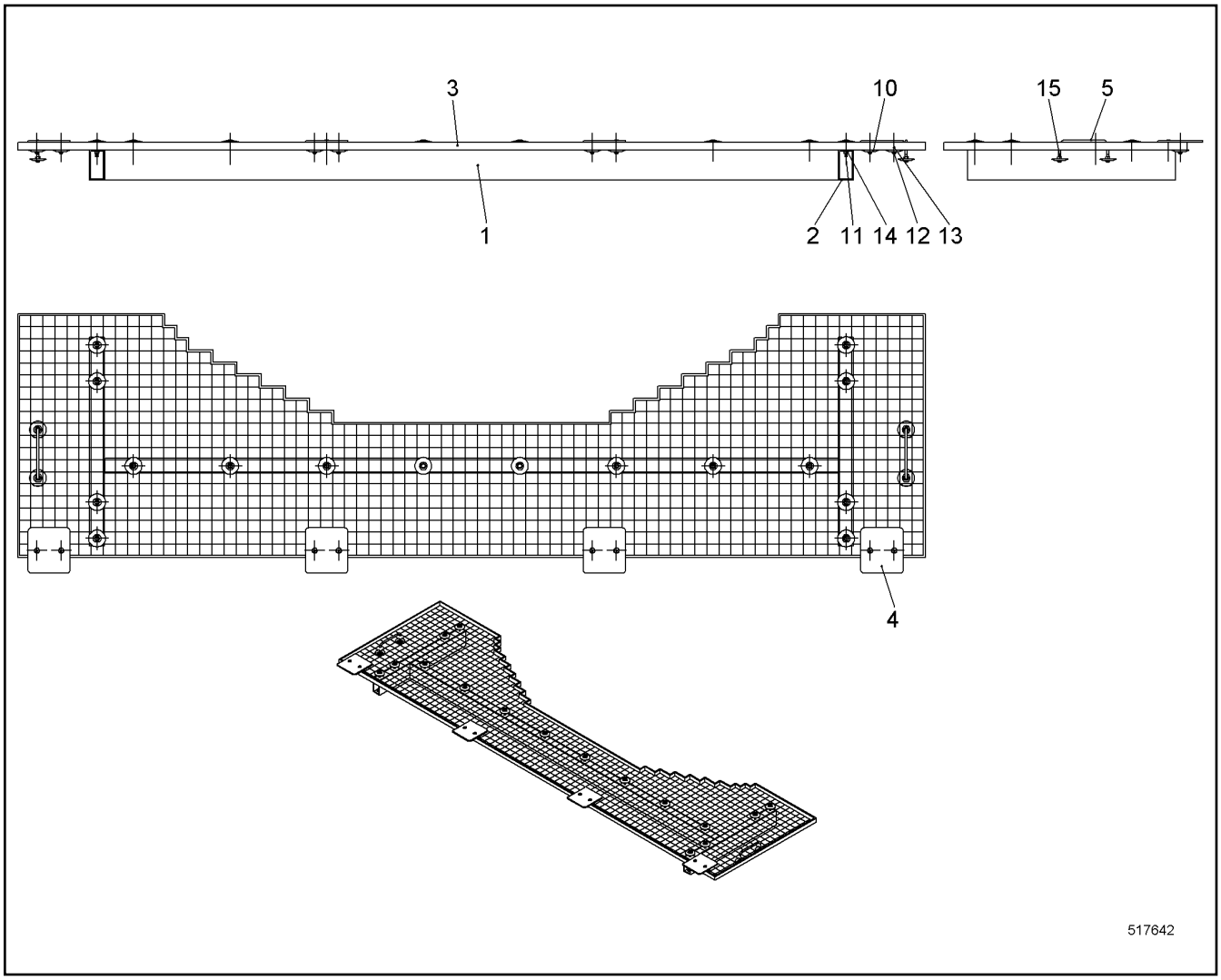

Pos.	Item	Quantity	Description	Bezeichnung	Serie	K
1	11245756	1	BRACING TUBE	TRAGROHR		
2	11245757	2	BRACING TUBE	TRAGROHR		
3	11245758	1	GRATING	GITTERROST		
4	11245760	4	WP	WP		
5	958478414	2	BRACKET	BUEGEL		
10	10098157	28	DISH	TELLER		
11	10538807	16	HEX SCREW ISO 4017 M8X50 A4-70	SECHSKANTSCHRAUBE		
12	10540493	12	HEX NUT ISO 10511 M8 A4	SECHSKANTMUTTER		
13	408601008	8	COUNTERSUNK SCREW DIN 7991 M8X45 8.8;	SENKSCHRAUBE		
14	485569314	16	HEX NUT EN 1661 M8 A2-70	SECHSKANTMUTTER		
15	411515014	4	HEX NUT ISO 4032 M8 A4-70	SECHSKANTMUTTER		

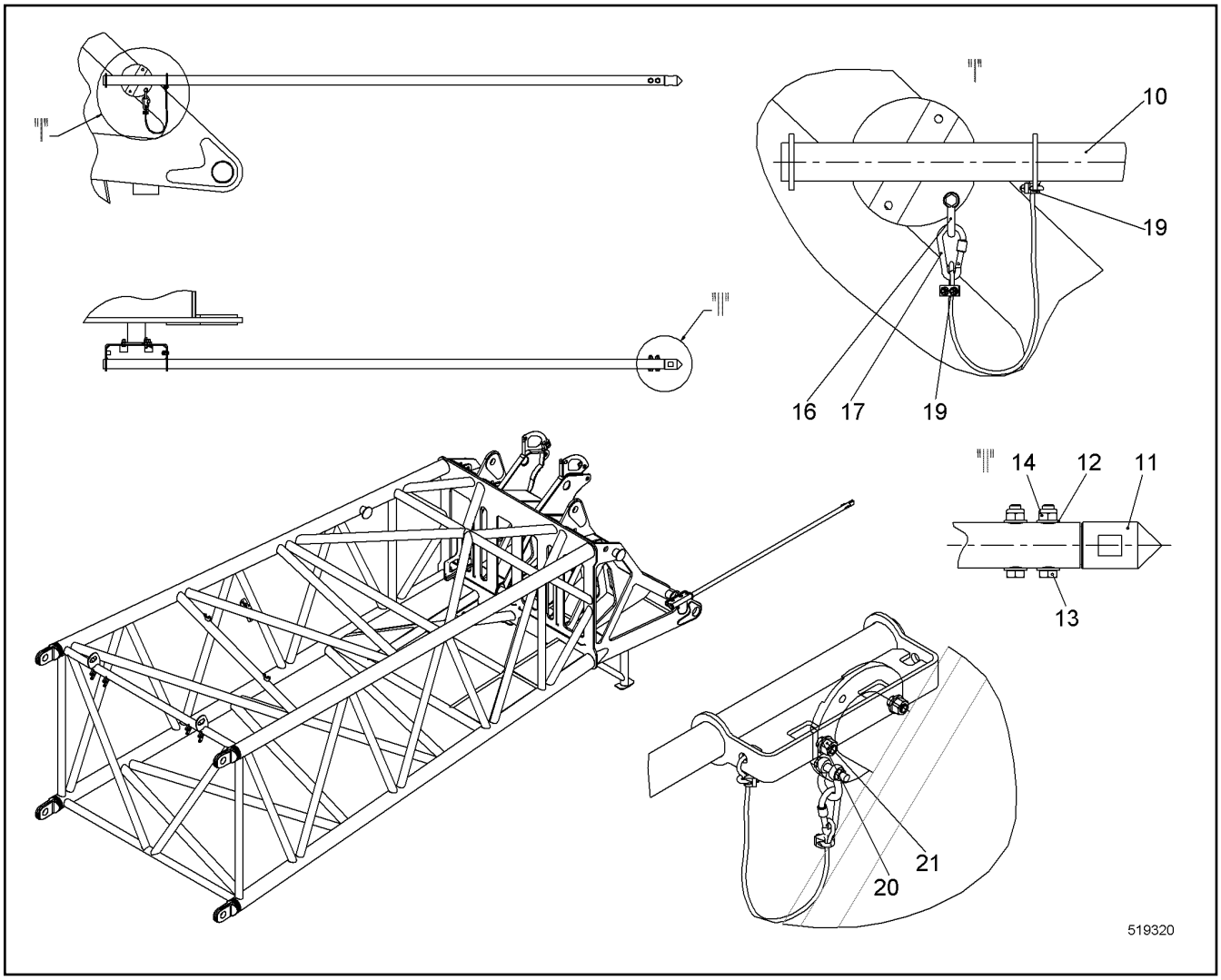

Pos.	Item	Quantity	Description	Bezeichnung	Serie	K
10	11271098	1	HOLDER	HALTER		
11	10574725	1	TIP	SPITZE		
12	4901782	6	WASHER ISO 7089 12 A4	SCHEIBE		
13	406527714	2	HEX SCREW ISO 4017 M12X70 A4-70	SECHSKANTSCHRAUBE		
14	10540495	2	HEX NUT ISO 10511 M12 A4	SECHSKANTMUTTER		
16	11280746	1	SHACKLE	SCHAEKEL		
17	10508505	1	SNAP HOOK	KARABINERHAKEN		
18	773400508	0.6	ROPE	SEIL		
19	773910114	2	ROPE CLAMP	SEILKLEMME		
20	406517314	2	HEX SCREW ISO 4017 M12X30 A4-70	SECHSKANTSCHRAUBE		
21	411516914	2	HEX NUT ISO 4032 M12 A4-70	SECHSKANTMUTTER		

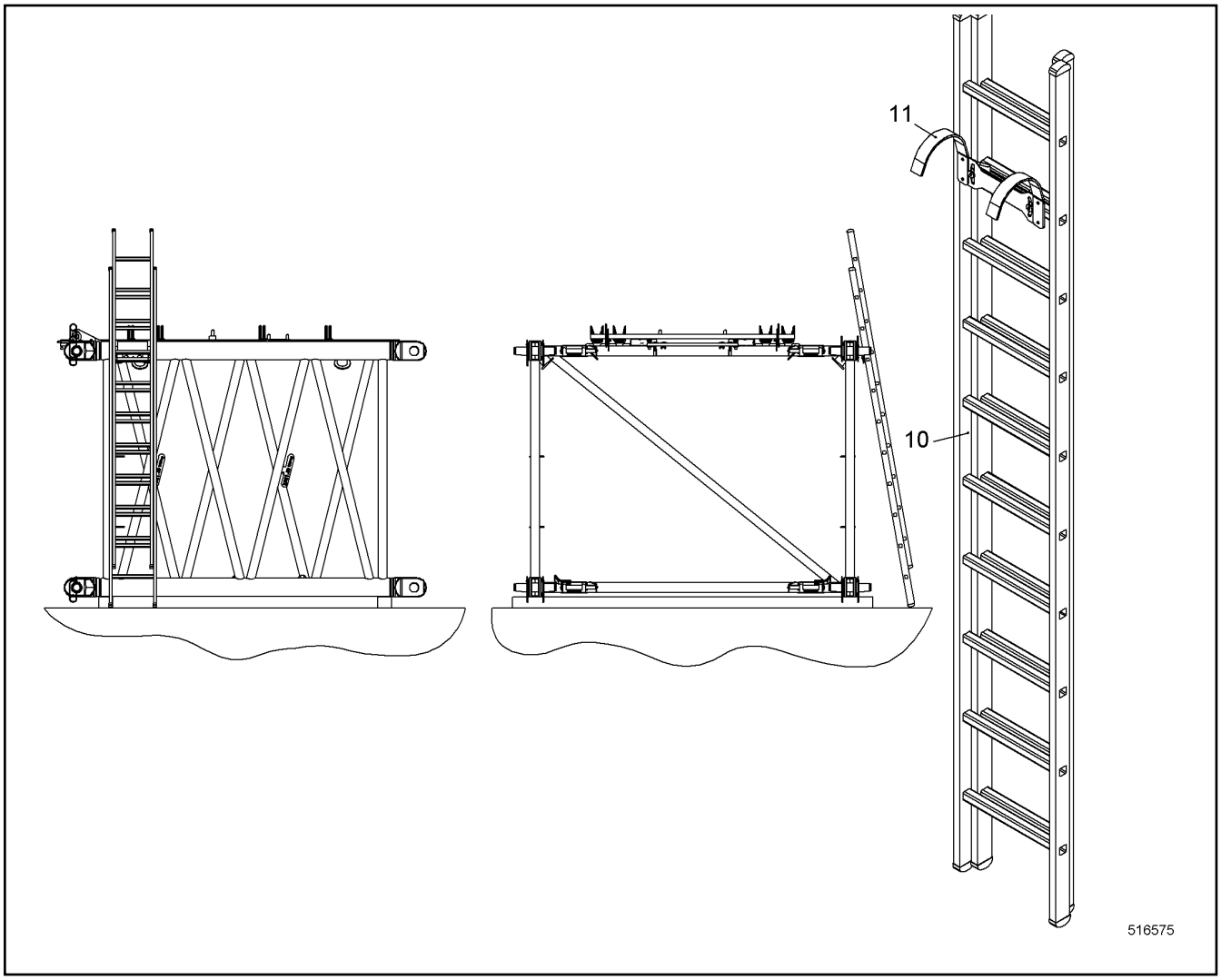

Pos.	Item	Quantity	Description	Bezeichnung	Serie	K
10	11237423	1	LADDER	LEITER		
11	10584890	1	LADDER BRACKET	LEITERHALTERUNG		

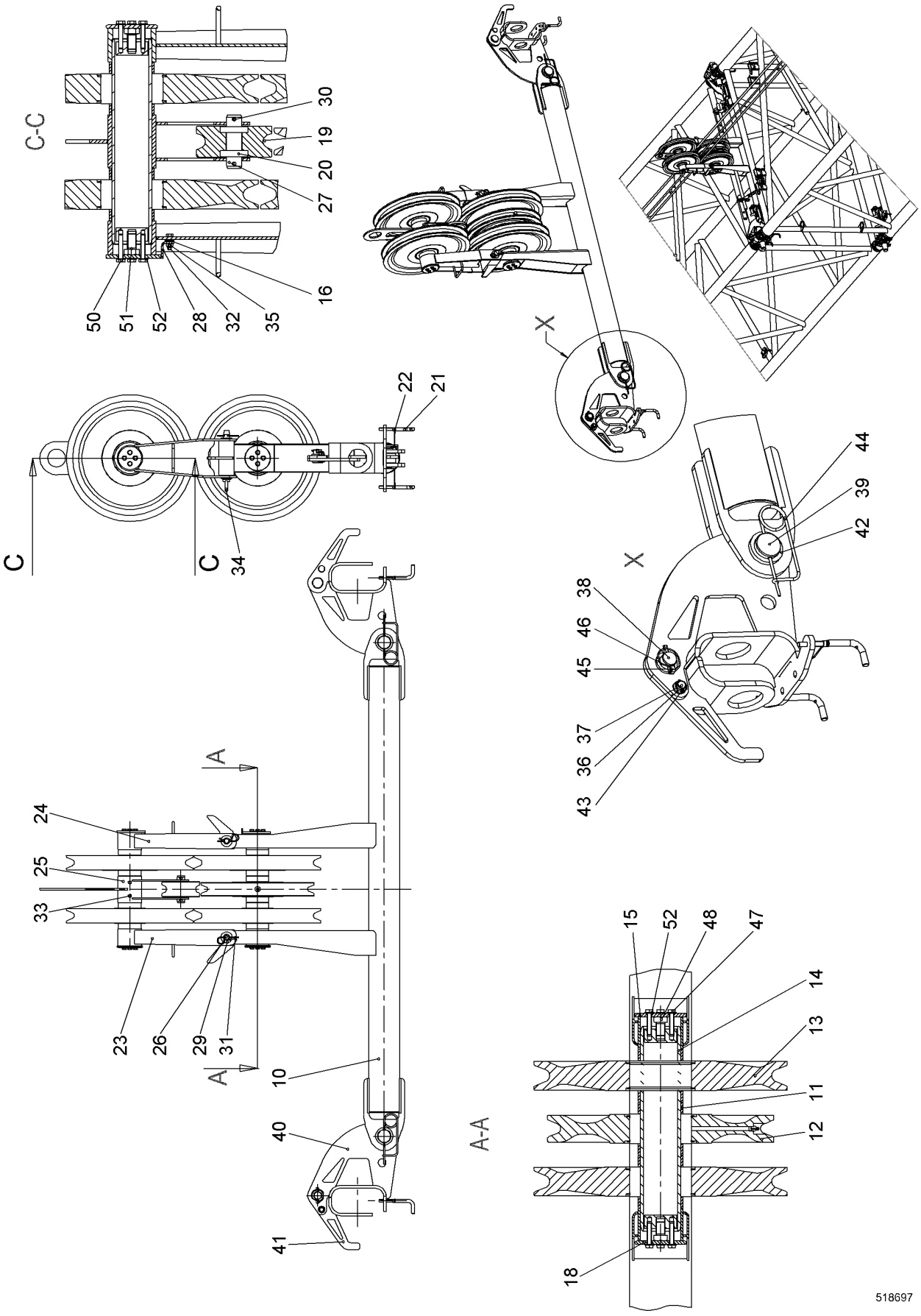
C-C
30
19
20
27
16
50
51
52
28
32
35
X
22
21
C
C
34
44
39
42
X
38
46
45
37
36
43
A
24
25
33
23
26
29
31
A
10
40
41
A-A
15
52
48
47
14
13
11
12
18
518697

Pos.	Item	Quantity	Description	Bezeichnung	Serie	K
10	991011714	1	ROPE GUIDE WELD.CONST.	SEILFUEHRUNG SCHWK		
11	949740614	10	BUSHING 90.5/101.6X26 LHR355-20;10019728	BUCHSE		
12	915523714	1	ROPE PULLEY CPL	SEILROLLE KPL		
13	914941914	4	ROPE PULLEY CPL	SEILROLLE KPL		
14	970901603	2	AXLE ST.CONST.	ACHSE SCHWK		
16	420001114	6	WASHER ISO 7089 10 A4	SCHEIBE		
19	970961303	1	ROLLER	ROLLE		
20	745120514	2	DEEP GROOVE BALL BEARING	RILLENKUGELLAGER		
21	956049414	4	TOGGLE	KNEBEL		
22	773400314	2	STEEL WIRE ROPE	STAHLDRAHTSEIL		
23	919014814	1	OUTRIGGER	ABSTUETZUNG		
24	919017314	1	OUTRIGGER	ABSTUETZUNG		
25	919022714	1	ROLLER CARRIER	ROLLENTRAEGER		
26	942594714	2	PIN EN 10060 28X220X192 X20CR13+QT;EN 1	BOLZEN		
27	953305103	1	PIN 35X 120 LHRD750-30;10019758	BOLZEN		
28	971323803	1	WP	WP		
29	420002601	4	WASHER ISO 7089 27	SCHEIBE		
30	433009014	2	SPLIT PIN ISO 1234 8X56 A4	SPLINT		
31	433206314	2	SPRING PLUG DIN 11024 5	FEDERSTECKER		
32	406501314	2	HEX SCREW ISO 4017 M8X30 A4-70	SECHSKANTSCHRAUBE		
33	10538806	2	HEX SCREW ISO 4017 M8X10 A4-70	SECHSKANTSCHRAUBE		
34	402600314	2	RING BOLT DIN 580 M12 C15E;EN 10084	RINGSCHRAUBE		
35	10540493	2	HEX NUT ISO 10511 M8 A4	SECHSKANTMUTTER		
36	421101714	2	WASHER DIN EN 28738 20 ST;	SCHEIBE		
37	11949153	2	PIN 30X46 LHRD900-40;10019758	BOLZEN		
38	485568414	2	PIN 48X58 LHRD900-40;10019758	BOLZEN		
39	948545514	2	PIN 68X105 LHRD750-30;10019758	BOLZEN		
40	991011914	2	FORK ST.CONST.	GABEL SCHWK		
41	991012214	2	FORK ST.CONST.	GABEL SCHWK		
42	421103514	2	WASHER DIN EN 28738 60 ST;	SCHEIBE		
43	485565814	2	SAFETY PLUG W HINGE-LID 4X27	SICHERHEITSKLAPPSTECKER		
44	433105008	2	RETAINING SPRING DIN 2194 6MM FS	SICHERUNGSFEDER		
45	10098106	2	SAFETY PLUG W HINGE-LID 10X55	SICHERHEITSKLAPPSTECKER		
46	421102914	2	WASHER DIN EN 28738 36 ST;	SCHEIBE		
47	406518614	8	HEX SCREW ISO 4017 M10X50 A4-70	SECHSKANTSCHRAUBE		
48	10543918	2	HEX SCREW ISO 4017 M20X30 10.9	SECHSKANTSCHRAUBE		
50	10538822	8	HEX SCREW ISO 4017 M10X55 A4-70	SECHSKANTSCHRAUBE		
51	10543919	2	HEX SCREW ISO 4017 M20X35 10.9	SECHSKANTSCHRAUBE		
52	10536580	16	WEDGE LOCK WASHER M10 254 SMO;EN 10	KEILSICHERUNGSSCHEIBE		

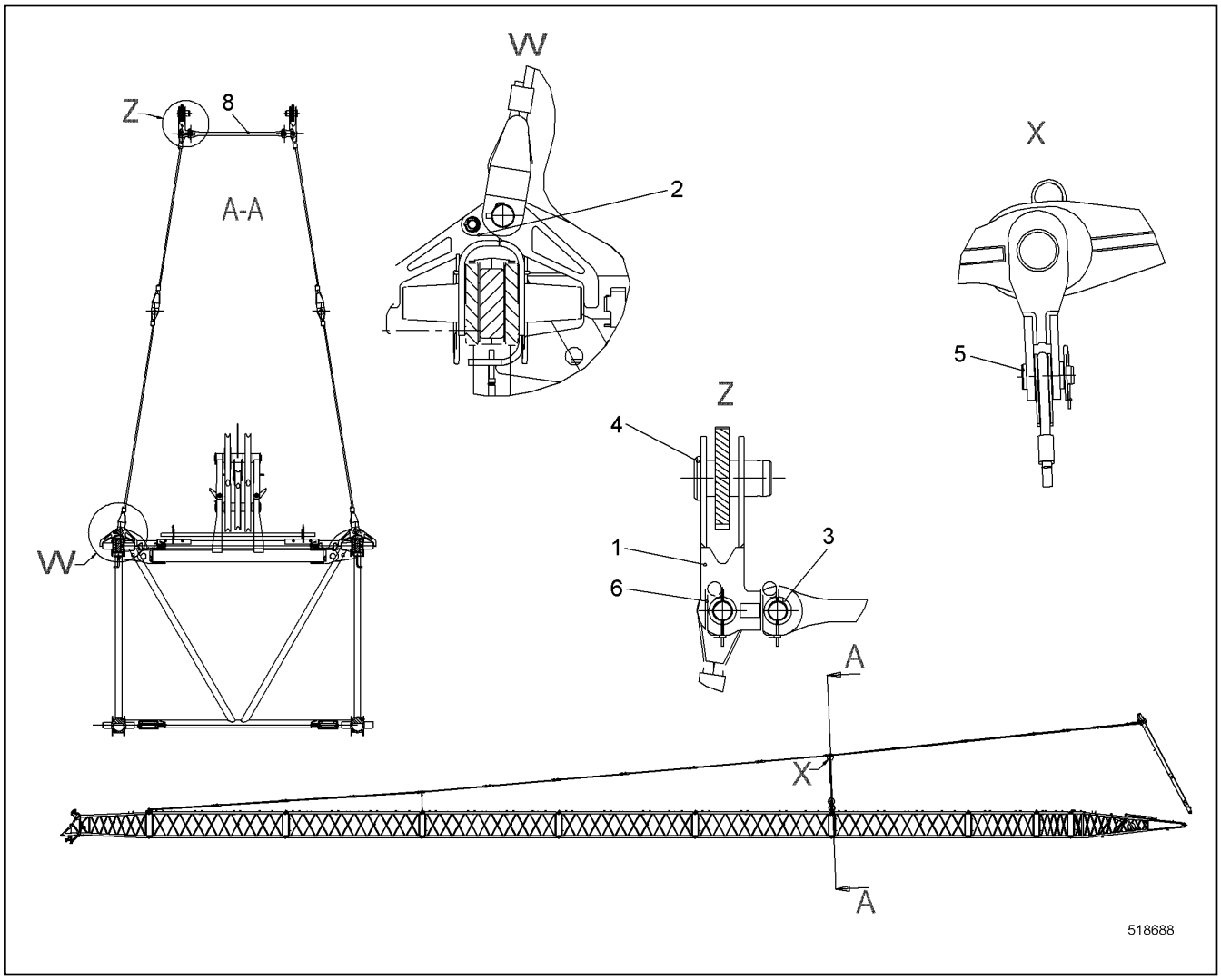

Pos.	Item	Quantity	Description	Bezeichnung	Serie	K
1	993034714	4	FORK	GABEL		
2	991012514	4	FORK ⇨ ❑ 642	GABEL		
3	421102914	12	WASHER DIN EN 28738 36 ST;	SCHEIBE		
4	11934415	4	PIN	BOLZEN		
5	453050914	12	PIN DIN 1435-B 35H11X90X80 S355J2;EN 1002	BOLZEN		
6	433101208	12	RETAINING SPRING 4MM	SICHERUNGSFEDER		
8	919421714	2	ROD	STANGE		

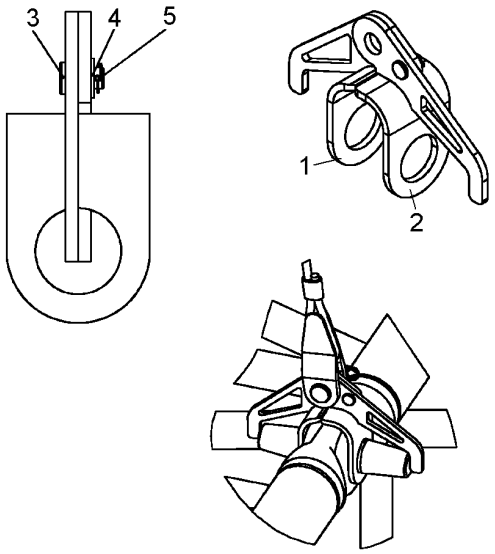

507796

Pos.	Item	Quantity	Description	Bezeichnung	Serie	K
1	991012614	1	FORK ST.CONST.	GABEL SCHWK		
2	991012214	1	FORK ST.CONST.	GABEL SCHWK		
3	11949153	1	PIN 30X46 LHRD900-40;10019758	BOLZEN		
4	10544174	1	WASHER ISO 7089 20	SCHEIBE		
5	485565814	1	SAFETY PLUG W HINGE-LID 4X27	SICHERHEITSKLAPPSTECKER		

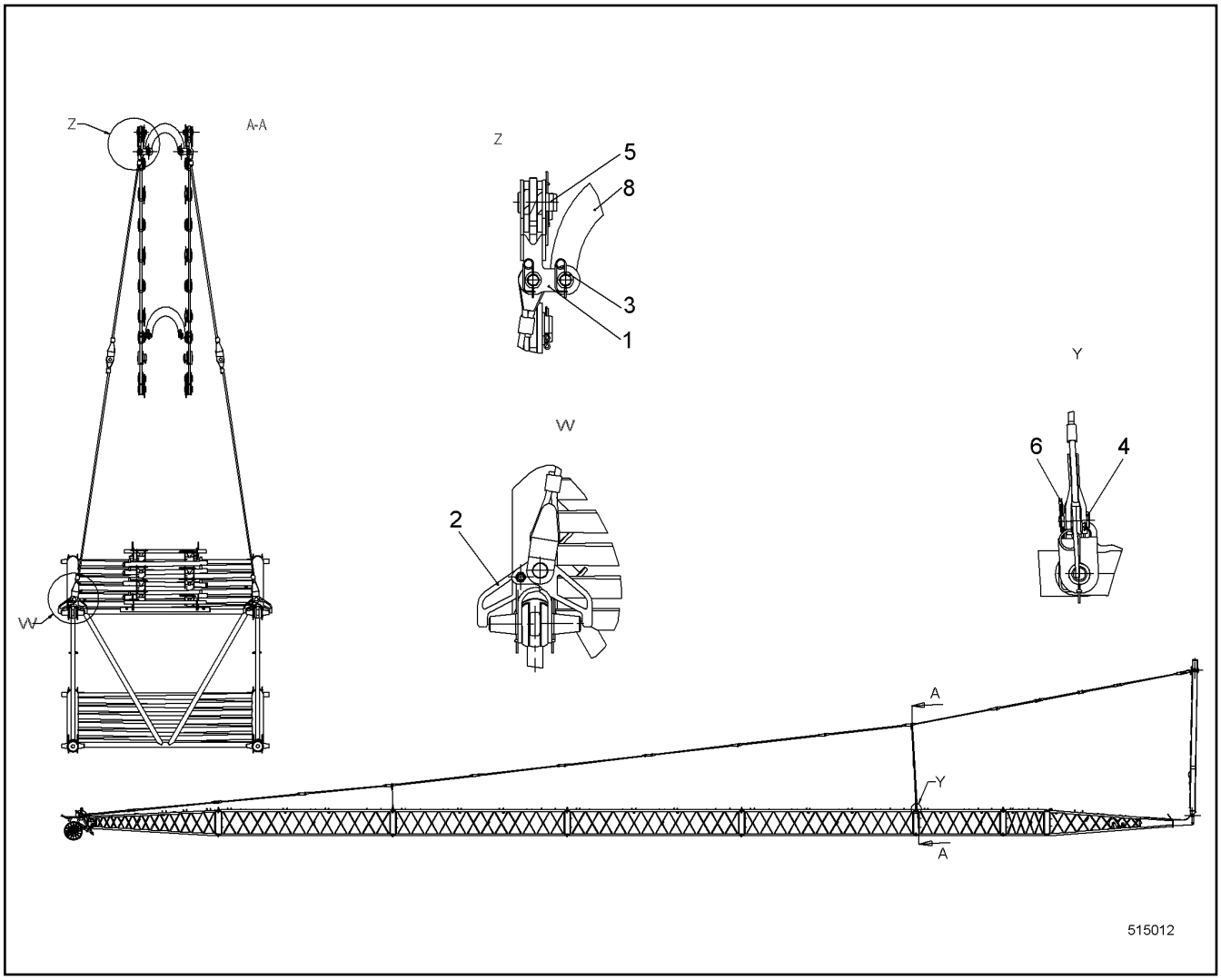

Pos.	Item	Quantity	Description	Bezeichnung	Serie	K
1	970591503	4	FORK	GABEL		
2	990678914	4	FORK ⇨ ❑ 644	GABEL		
3	421102914	12	WASHER DIN EN 28738 36 ST;	SCHEIBE		
4	453050914	12	PIN DIN 1435-B 35H11X90X80 S355J2;EN 1002	BOLZEN		
5	949351814	4	PIN 63X120 LHRD900-40;10019758	BOLZEN		
6	433101208	12	RETAINING SPRING 4MM	SICHERUNGSFEDER		
8	10555261	2	BRACKET	BUEGEL		

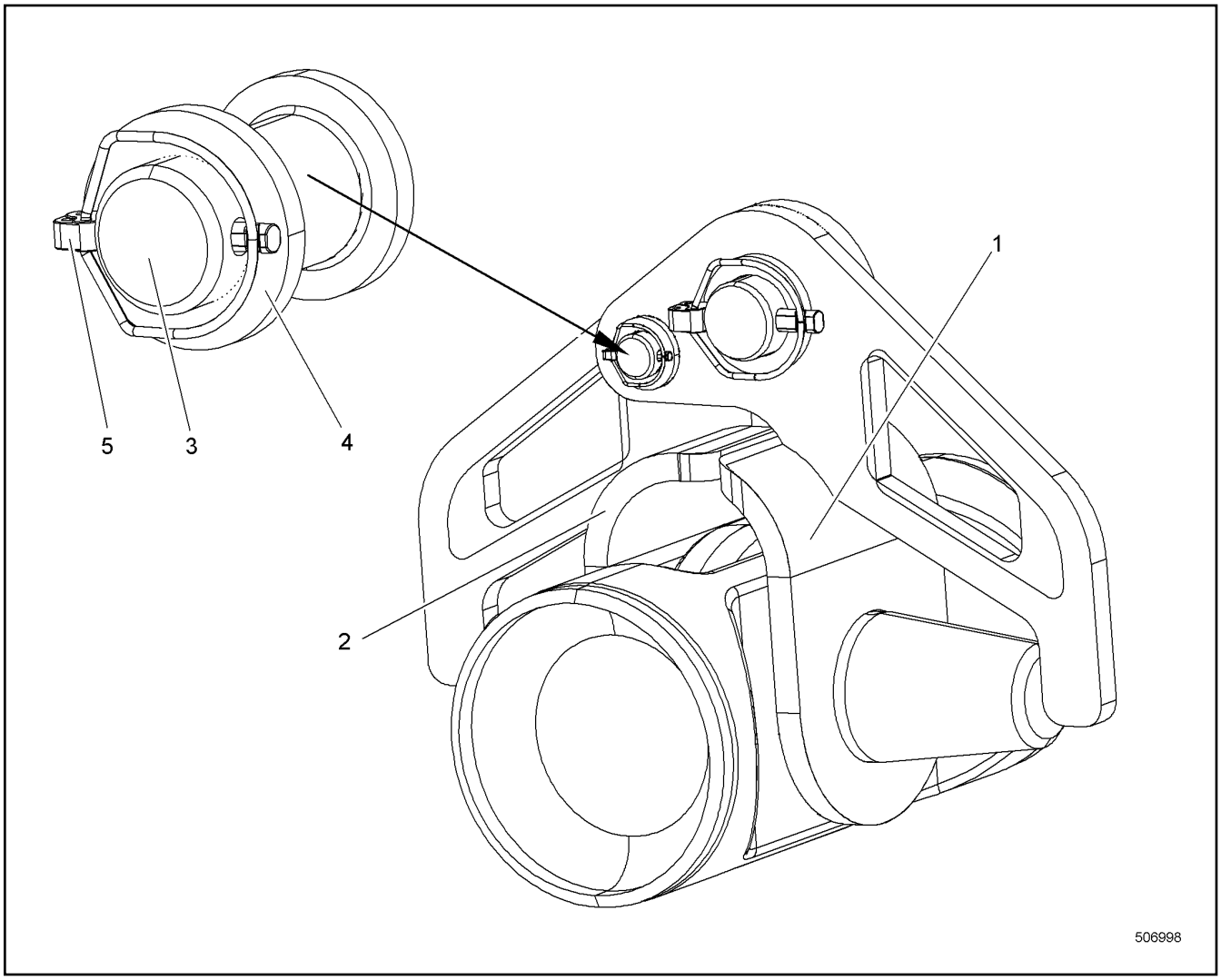

Pos.	Item	Quantity	Description	Bezeichnung	Serie	K
1	990678714	1	FORK ST.CONST.	GABEL SCHWK		
2	990678814	1	FORK ST.CONST.	GABEL SCHWK		
3	11949153	1	PIN 30X46 LHRD900-40;10019758	BOLZEN		
4	421101714	1	WASHER DIN EN 28738 20 ST;	SCHEIBE		
5	485565814	1	SAFETY PLUG W HINGE-LID 4X27	SICHERHEITSKLAPPSTECKER		

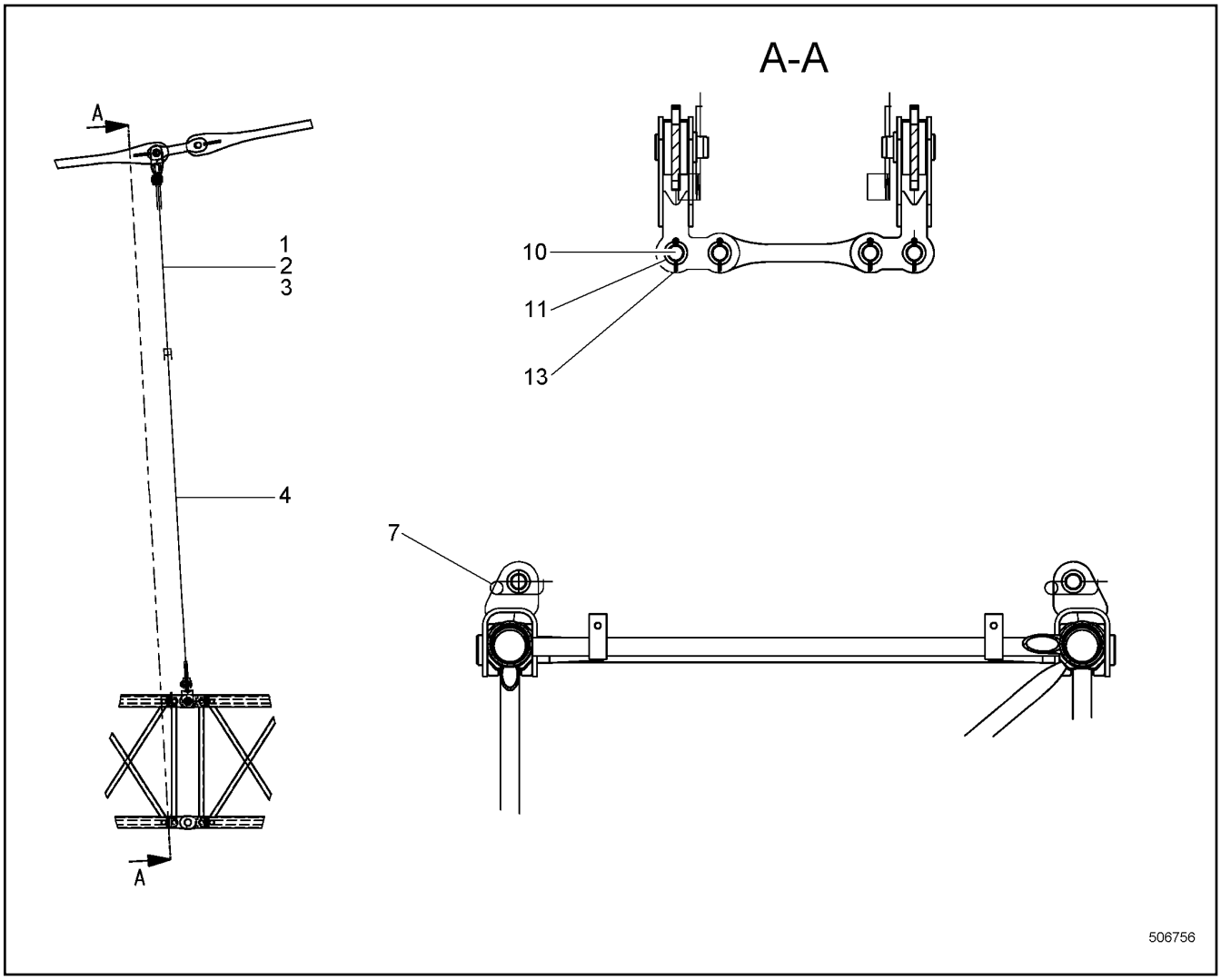

Pos.	Item	Quantity	Description	Bezeichnung	Serie	K
1	774760214	6	GUY ROPE	HALTESEIL		
2	774760514	8	GUY ROPE	HALTESEIL		
3	774760414	6	GUY ROPE	HALTESEIL		
4	774760314	6	GUY ROPE	HALTESEIL		
5	453050914	14	PIN DIN 1435-B 35H11X90X80 S355J2;EN 1002	BOLZEN		
6	421102914	14	WASHER DIN EN 28738 36 ST;	SCHEIBE		
7	433101208	14	RETAINING SPRING 4MM	SICHERUNGSFEDER		
9	790538014	2	GUY ROPE	HALTESEIL		
10	10350539	2	GUY ROPE	HALTESEIL		

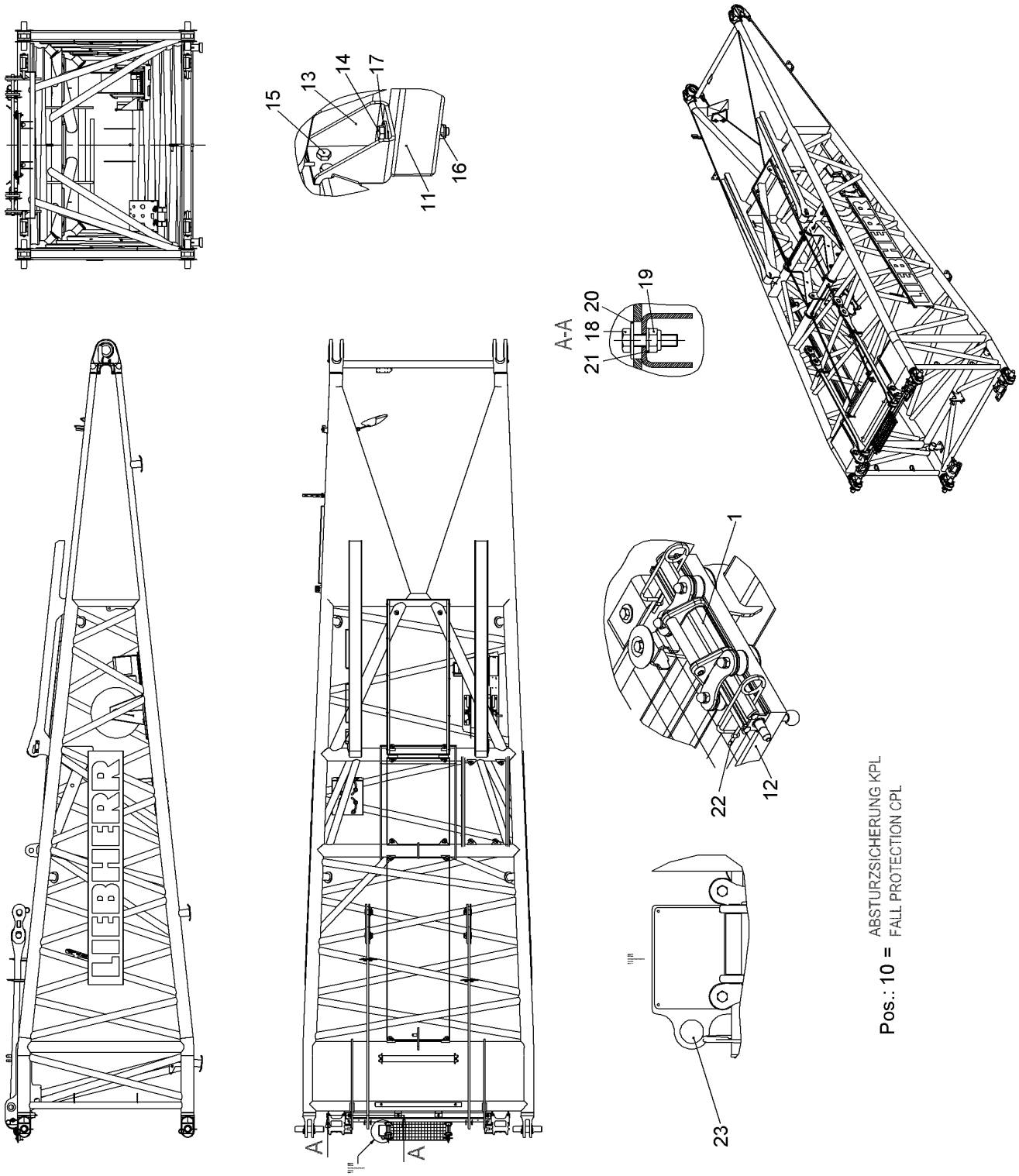

Pos.: 10 = ABSTURZSICHERUNG KPL
FALL PROTECTION CPL

516302

Pos.	Item	Quantity	Description	Bezeichnung	Serie	K
10	10556011	1	FALL PROTECTION CPL ⇨ ❑ 648	ABSTURZSICHERUNG KPL		
11	10557217	1	CROSS BEAM ST.CONST.	QUERTRAEGER SCHWK		
12	10552807	1	GRATING CPL ⇨ ❑ 649	GITTERROST KPL		
13	10557223	2	WP	WP		
14	10539294	2	HEX SCREW ISO 4017 M10X85 A4-70	SECHSKANTSCHRAUBE		
15	406527814	4	HEX SCREW ISO 4017 M10X40 A4-70	SECHSKANTSCHRAUBE		
16	10540494	2	HEX NUT ISO 10511 M10 A4	SECHSKANTMUTTER		
17	10540511	4	WASHER ISO 7093-1 10 A4	SCHEIBE		
18	406501314	2	HEX SCREW ISO 4017 M8X30 A4-70	SECHSKANTSCHRAUBE		
19	10540493	2	HEX NUT ISO 10511 M8 A4	SECHSKANTMUTTER		
20	10540510	2	WASHER ISO 7093-1 8 A4	SCHEIBE		
21	420001014	2	WASHER ISO 7089 8 A4	SCHEIBE		
22	433101208	4	RETAINING SPRING 4MM	SICHERUNGSFEDER		
23	11228734	1	ADHESIVE SIGN	KLEBESCHILD		

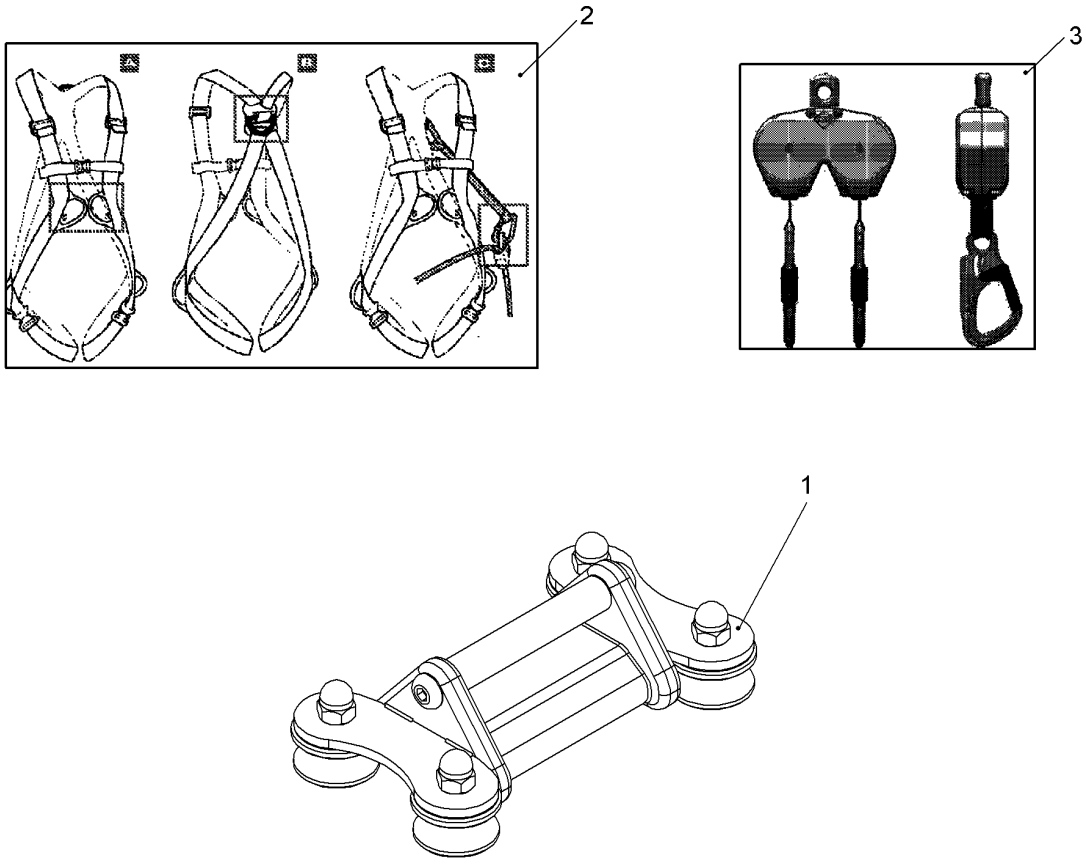

Pos.	Item	Quantity	Description	Bezeichnung	Serie	K
1	11928908	2	ROLLING TRUCK CPL	ROLLWAGEN KPL		
2	10556012	1	HARNESS	TRAGEGURT		
3	10556014	1	HIGHT FIXATION DEVICE	HOEHENSICHERUNGSGERAET		

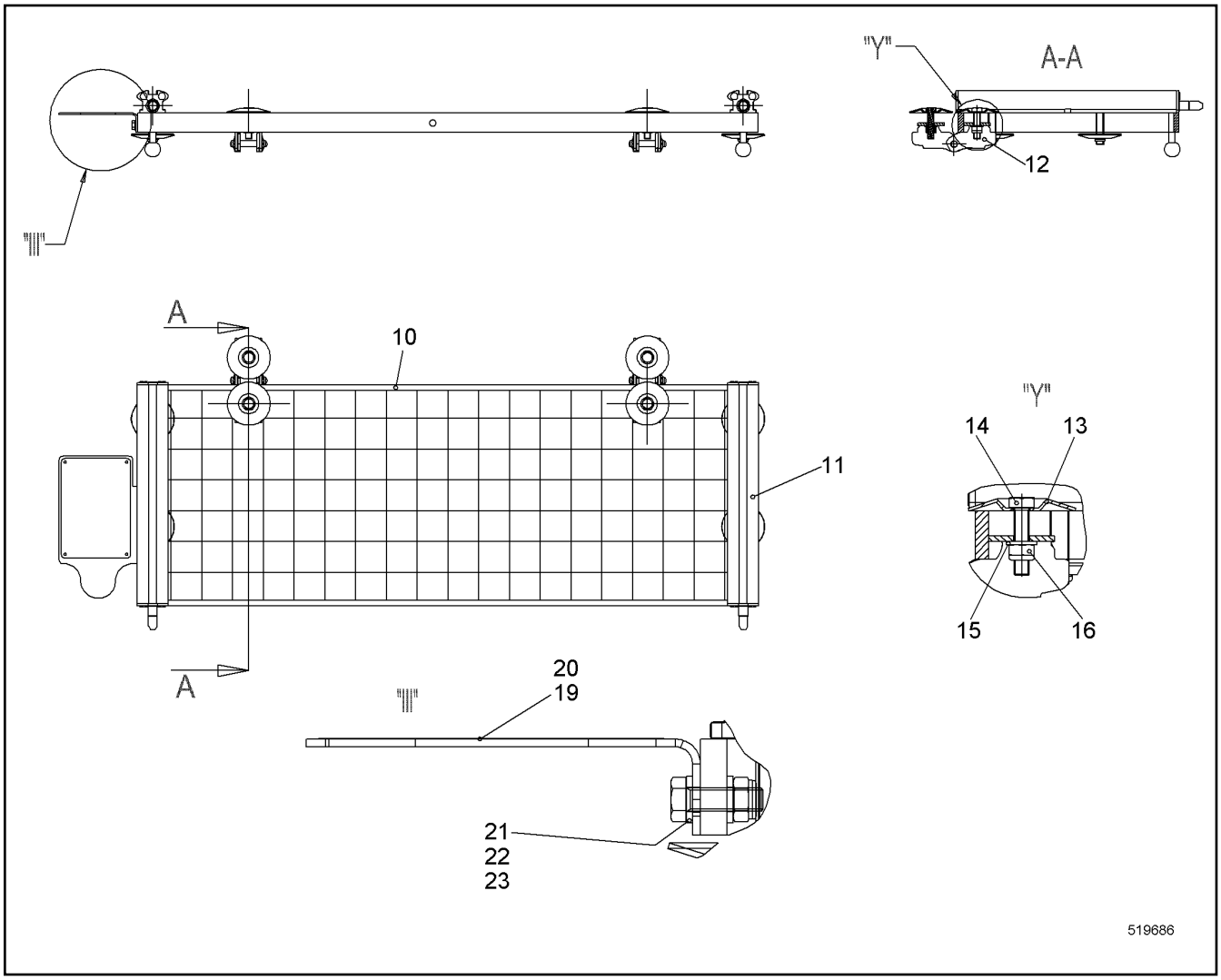

Pos.	Item	Quantity	Description	Bezeichnung	Serie	K
10	10552808	1	GRATING	GITTERROST		
11	10554229	2	RAIL CPL	SCHIENE KPL		
12	10554231	2	HINGE CPL	SCHARNIER KPL		
13	10098157	4	DISH	TELLER		
14	406517614	4	HEX SCREW ISO 4017 M8X35 A4-70	SECHSKANTSCHRAUBE		
15	420001014	4	WASHER ISO 7089 8 A4	SCHEIBE		
16	10540493	4	HEX NUT ISO 10511 M8 A4	SECHSKANTMUTTER		
19	11228766	1	SIGN	SCHILD		
20	11228726	1	ADHESIVE SIGN	KLEBESCHILD		
21	420000414	4	WASHER ISO 7089 6 A4	SCHEIBE		
22	406532614	2	HEX SCREW ISO 4017 M6X20 A4-70	SECHSKANTSCHRAUBE		
23	10540492	2	HEX NUT ISO 10511 M6 A4	SECHSKANTMUTTER		

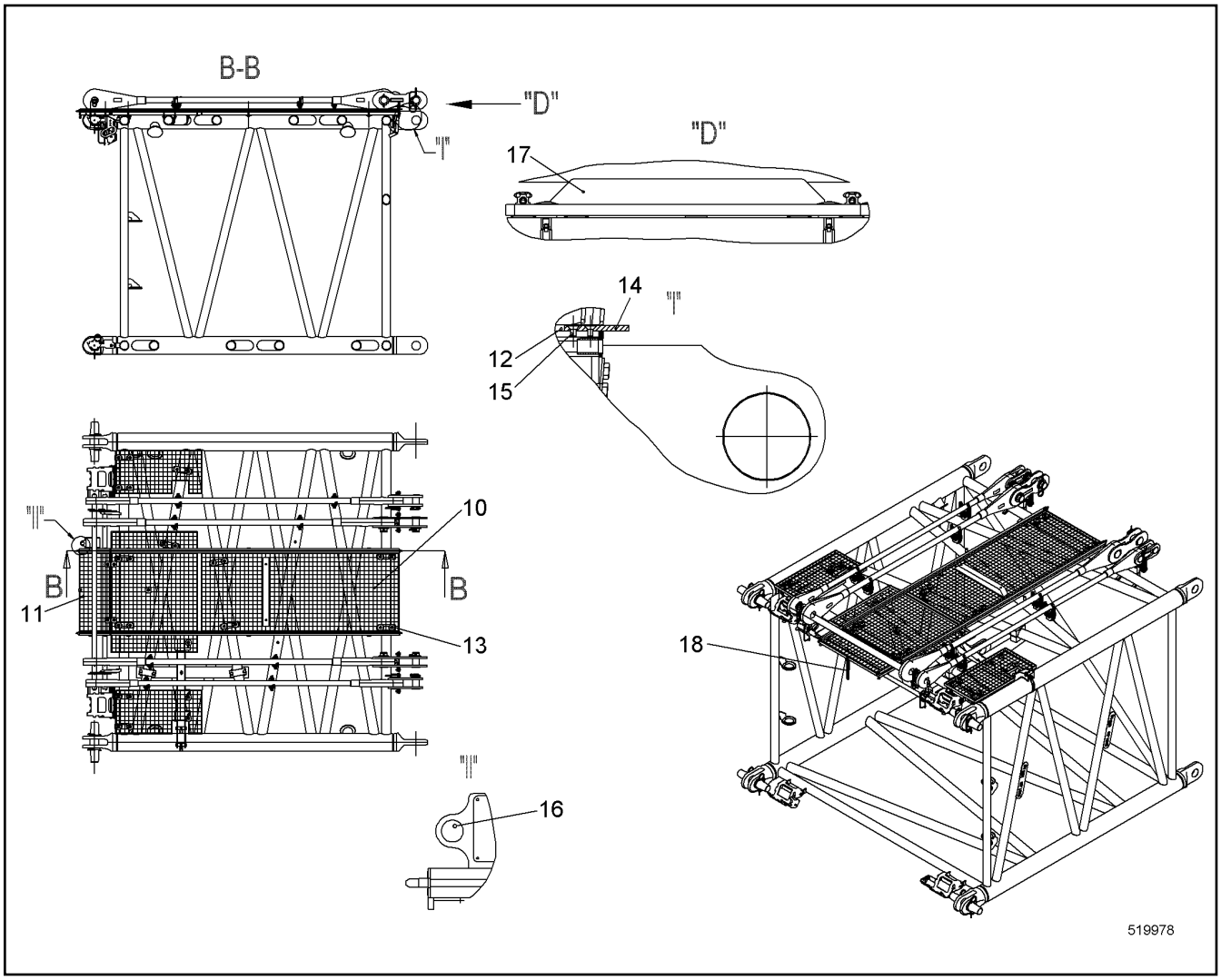

Pos.	Item	Quantity	Description	Bezeichnung	Serie	K
10	10517914	1	GRATING	GITTERROST		
11	10552807	1	GRATING CPL ⇨ ❑ 649	GITTERROST KPL		
12	11306944	2	RAIL CPL ⇨ ❑ 651	SCHIENE KPL		
13	11283913	4	FIXING CLAMP ⇨ ❑ 553	BEFESTIGUNGSCHELLE		
14	10566932	2	LIMIT STOP	ANSCHLAG		
15	10348867	4	COUNTERSUNK SCREW ISO 10642 M5X10 A4	SENKSCHRAUBE		
16	11228734	1	ADHESIVE SIGN	KLEBESCHILD		
17	11238277	1	ROPE GUARD ⇨ ❑ 652	SEILSCHUTZ		
18	11305670	1	TRANSPORT LASHING ⇨ ❑ 653	TRANSPORTSICHERUNG		

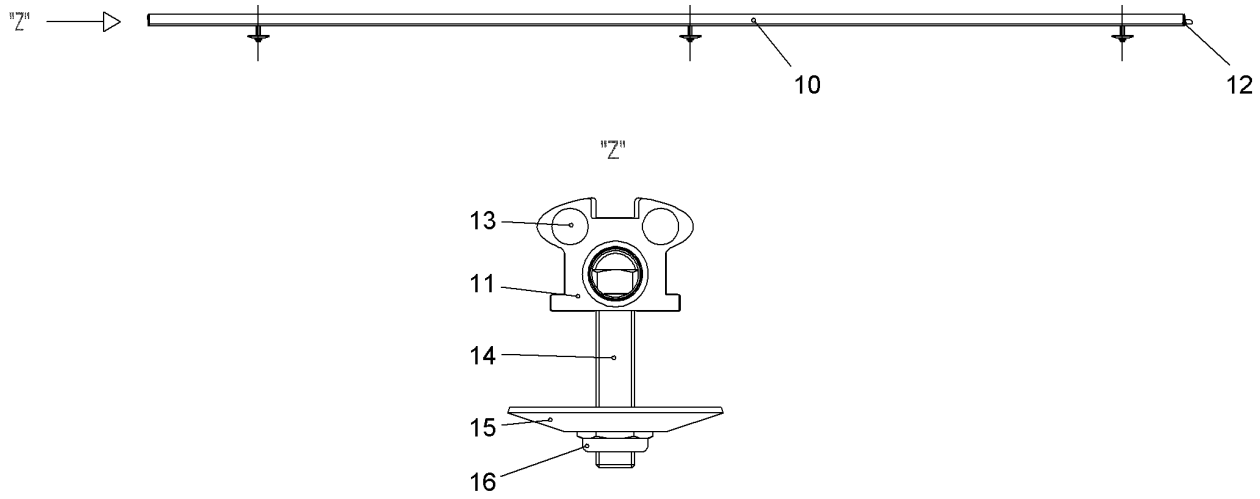

Pos.	Item	Quantity	Description	Bezeichnung	Serie	K
10	11306945	1	RAIL	SCHIENE		
11	10554227	1	COVER	DECKEL		
12	10554228	1	COVER	DECKEL		
13	10555185	4	BLIND RIVET DIN 7337-A 4.8X16 X5CRNI18-10	BLINDNIET		
14	406512014	3	HEX SCREW ISO 4017 M10X45 A4-70	SECHSKANTSCHRAUBE		
15	10098157	3	DISH	TELLER		
16	10540494	3	HEX NUT ISO 10511 M10 A4	SECHSKANTMUTTER		

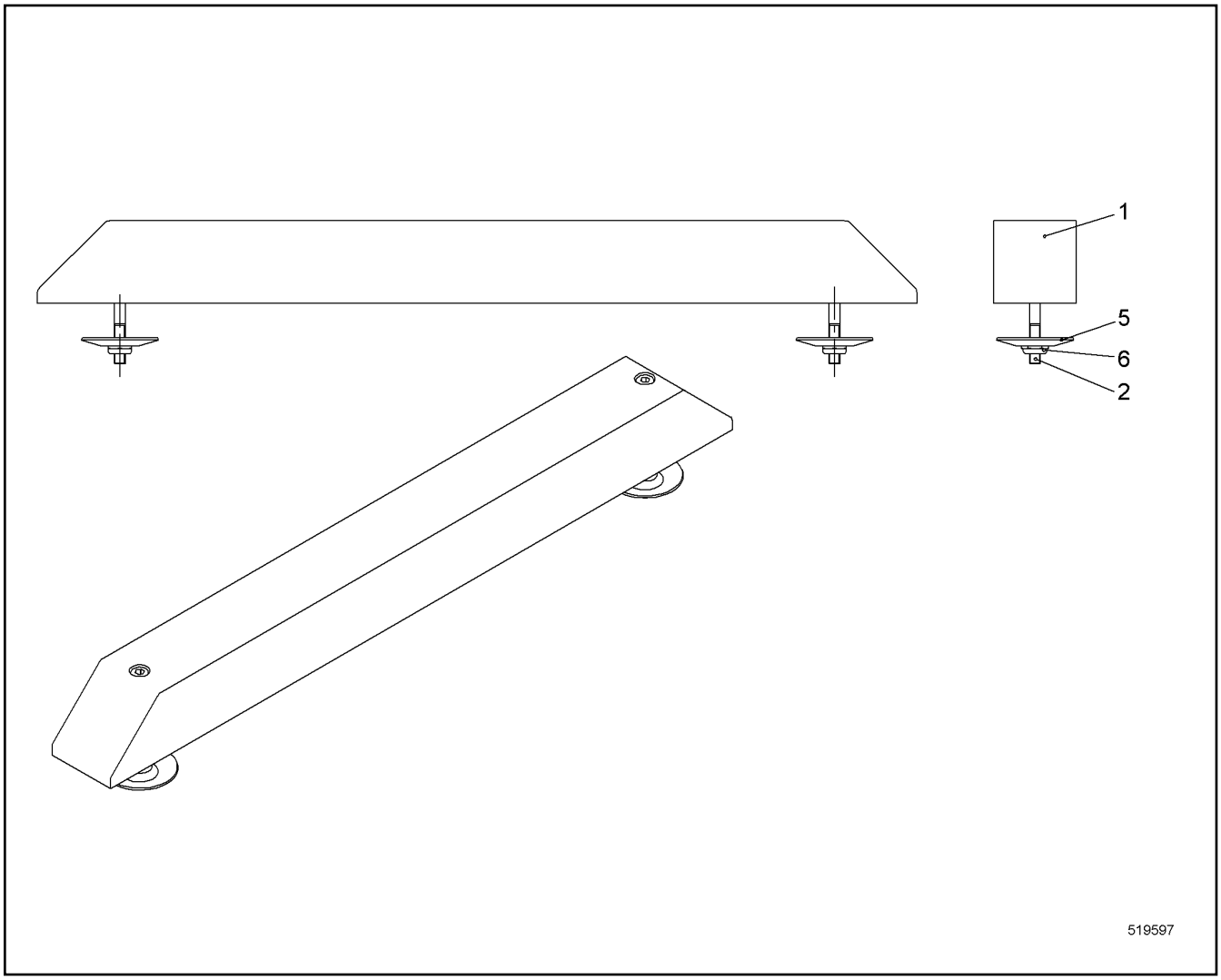

Pos.	Item	Quantity	Description	Bezeichnung	Serie	K
1	11238278	1	STRIP	LEISTE		
2	10539496	2	SOCKET HEAD SCREW ISO 4762 M8X95 A4-7	ZYLINDERSCHRAUBE		
5	10098157	2	DISH	TELLER		
6	10540493	2	HEX NUT ISO 10511 M8 A4	SECHSKANTMUTTER		

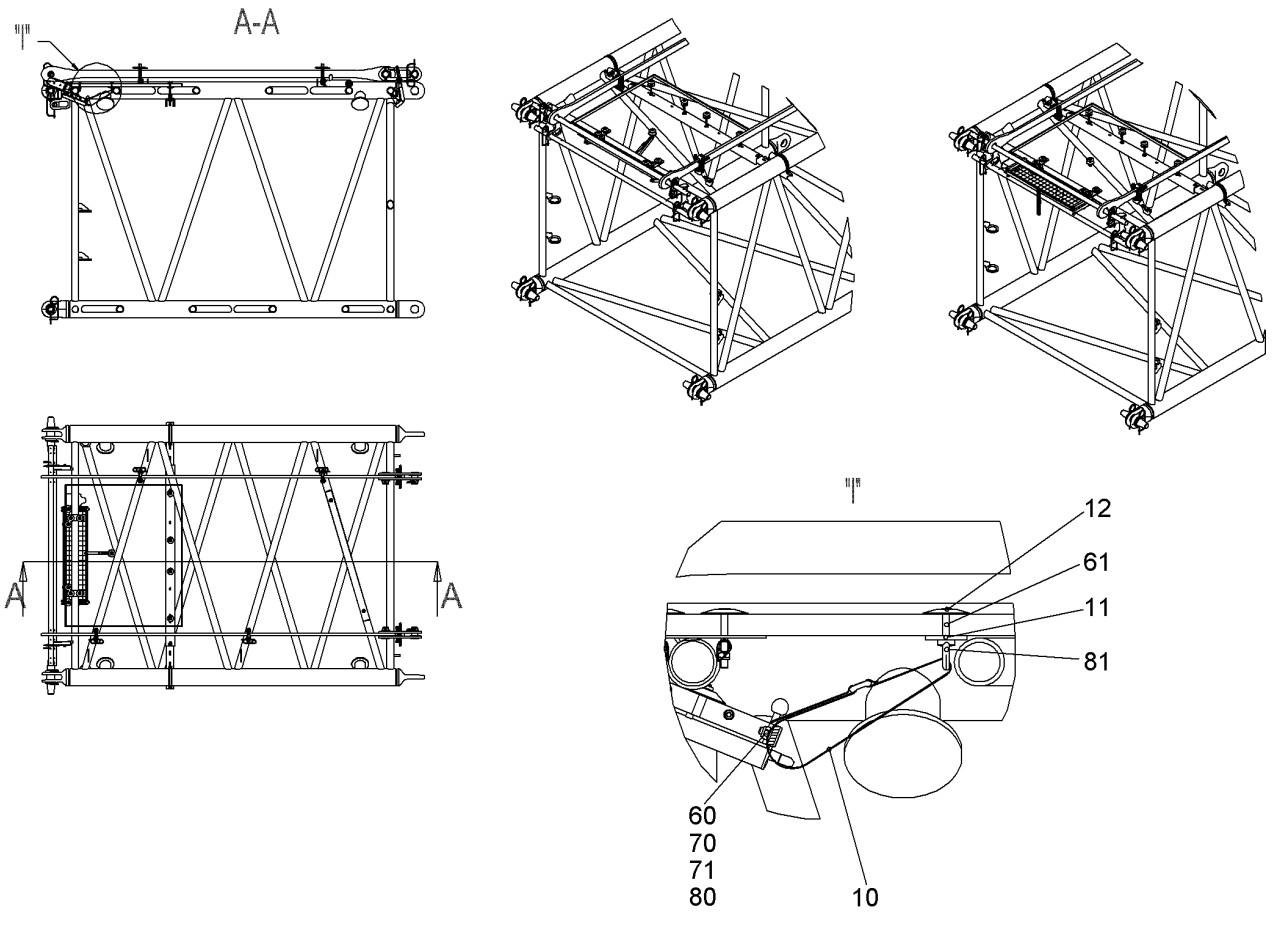

Pos.	Item	Quantity	Description	Bezeichnung	Serie	K
10	10020520	1	LASHING STRAP	ZURRGURT		
12	10098157	1	DISH	TELLER		
60	408606414	1	COUNTERSUNK SCREW DIN 7991 M8X25 A4-7	SENKSCHRAUBE		
61	406532914	1	HEX SCREW ISO 4017 M8X40 A4-70	SECHSKANTSCHRAUBE		
70	420001014	1	WASHER ISO 7089 8 A4	SCHEIBE		
71	460022703	1	WASHER EN 14399-6 12 C45	SCHEIBE		
80	10540493	1	HEX NUT ISO 10511 M8 A4	SECHSKANTMUTTER		
81	411200108	1	RING NUT DIN 582 M8 C15E;EN 10084	RINGMUTTER		

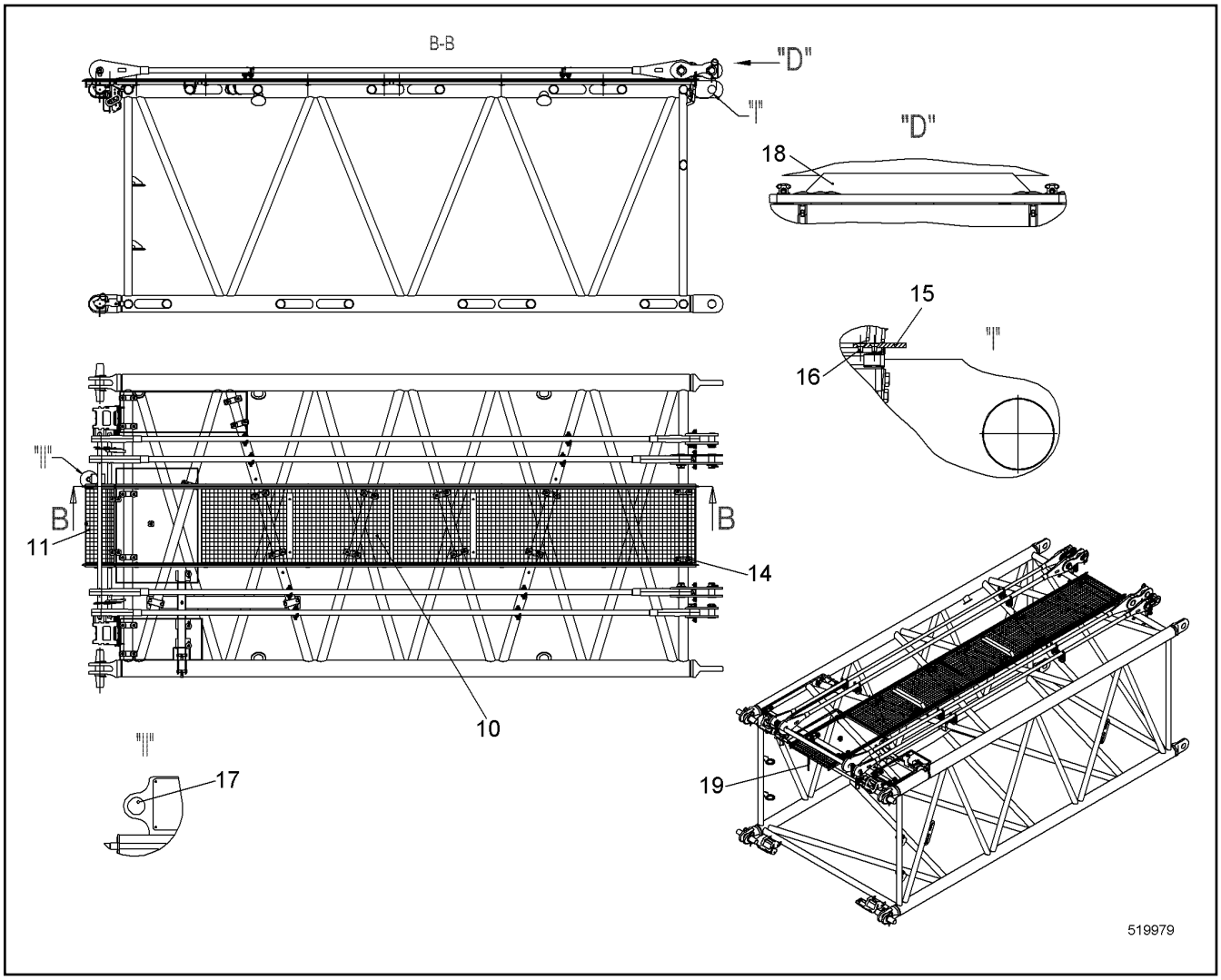

Pos.	Item	Quantity	Description	Bezeichnung	Serie	K
10	10517914	1	GRATING	GITTERROST		
11	10552807	1	GRATING CPL ⇨ ❑ 649	GITTERROST KPL		
12	10553070	1	GRATING	GITTERROST		
13	10554368	2	RAIL CPL	SCHIENE KPL		
14	11283913	10	FIXING CLAMP ⇨ ❑ 553	BEFESTIGUNGSCHELLE		
15	10566932	2	LIMIT STOP	ANSCHLAG		
16	10348867	4	COUNTERSUNK SCREW ISO 10642 M5X10 A4	SENKSCHRAUBE		
17	11228734	1	ADHESIVE SIGN	KLEBESCHILD		
18	11238277	2	ROPE GUARD ⇨ ❑ 652	SEILSCHUTZ		
19	11305670	1	TRANSPORT LASHING ⇨ ❑ 653	TRANSPORTSICHERUNG		

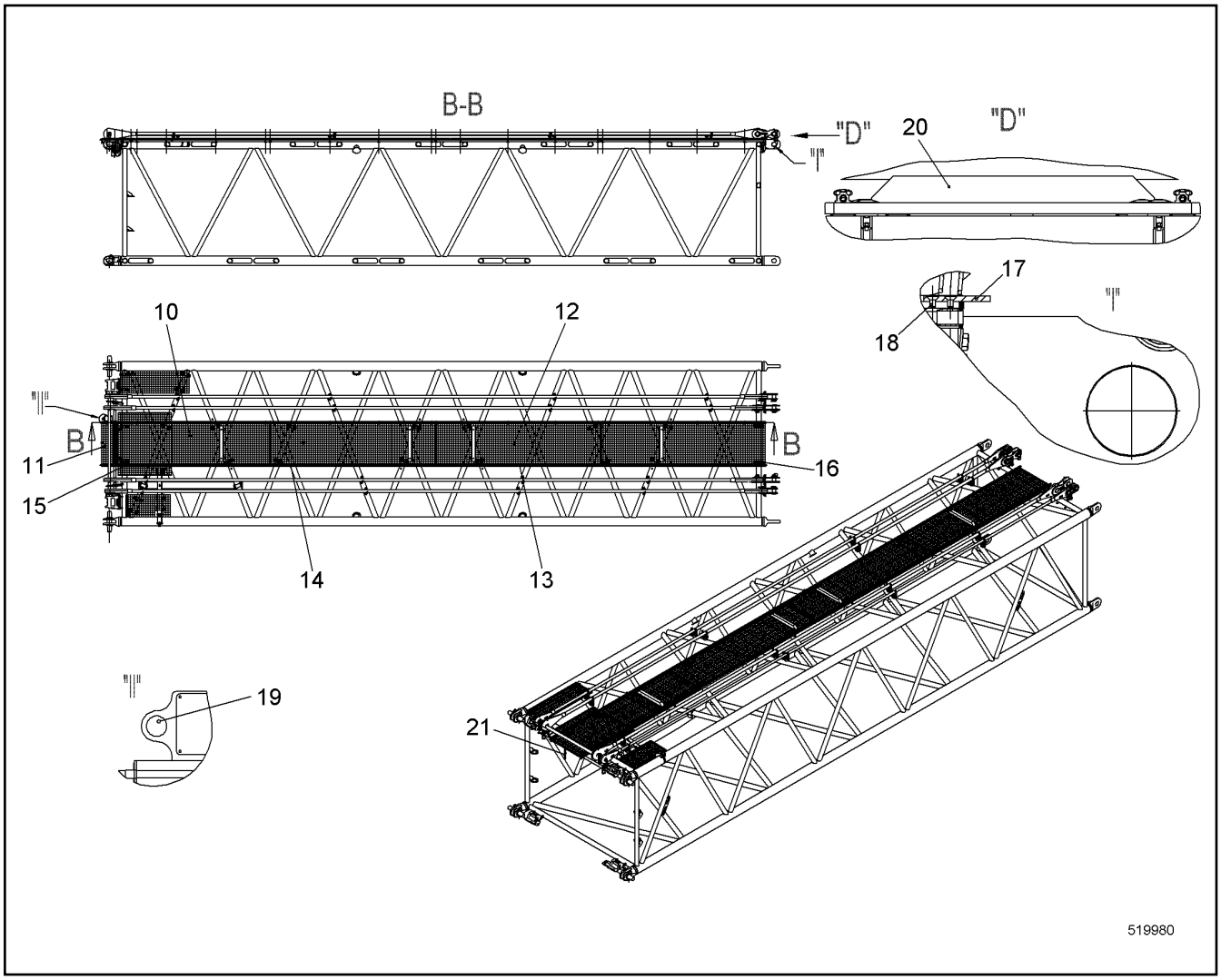

Pos.	Item	Quantity	Description	Bezeichnung	Serie	K
10	11314134	1	GRATING	GITTERROST		
11	10552807	1	GRATING CPL ⇨ ❑ 649	GITTERROST KPL		
12	10553070	3	GRATING	GITTERROST		
13	10554368	2	RAIL CPL	SCHIENE KPL		
14	10554368	2	RAIL CPL	SCHIENE KPL		
15	10554881	2	RAIL CPL	SCHIENE KPL		
16	11283913	14	FIXING CLAMP ⇨ ❑ 553	BEFESTIGUNGSCHELLE		
17	10566932	2	LIMIT STOP	ANSCHLAG		
18	10348867	4	COUNTERSUNK SCREW ISO 10642 M5X10 A4	SENKSCHRAUBE		
19	11228734	1	ADHESIVE SIGN	KLEBESCHILD		
20	11238277	4	ROPE GUARD ⇨ ❑ 652	SEILSCHUTZ		
21	11305670	1	TRANSPORT LASHING ⇨ ❑ 653	TRANSPORTSICHERUNG		

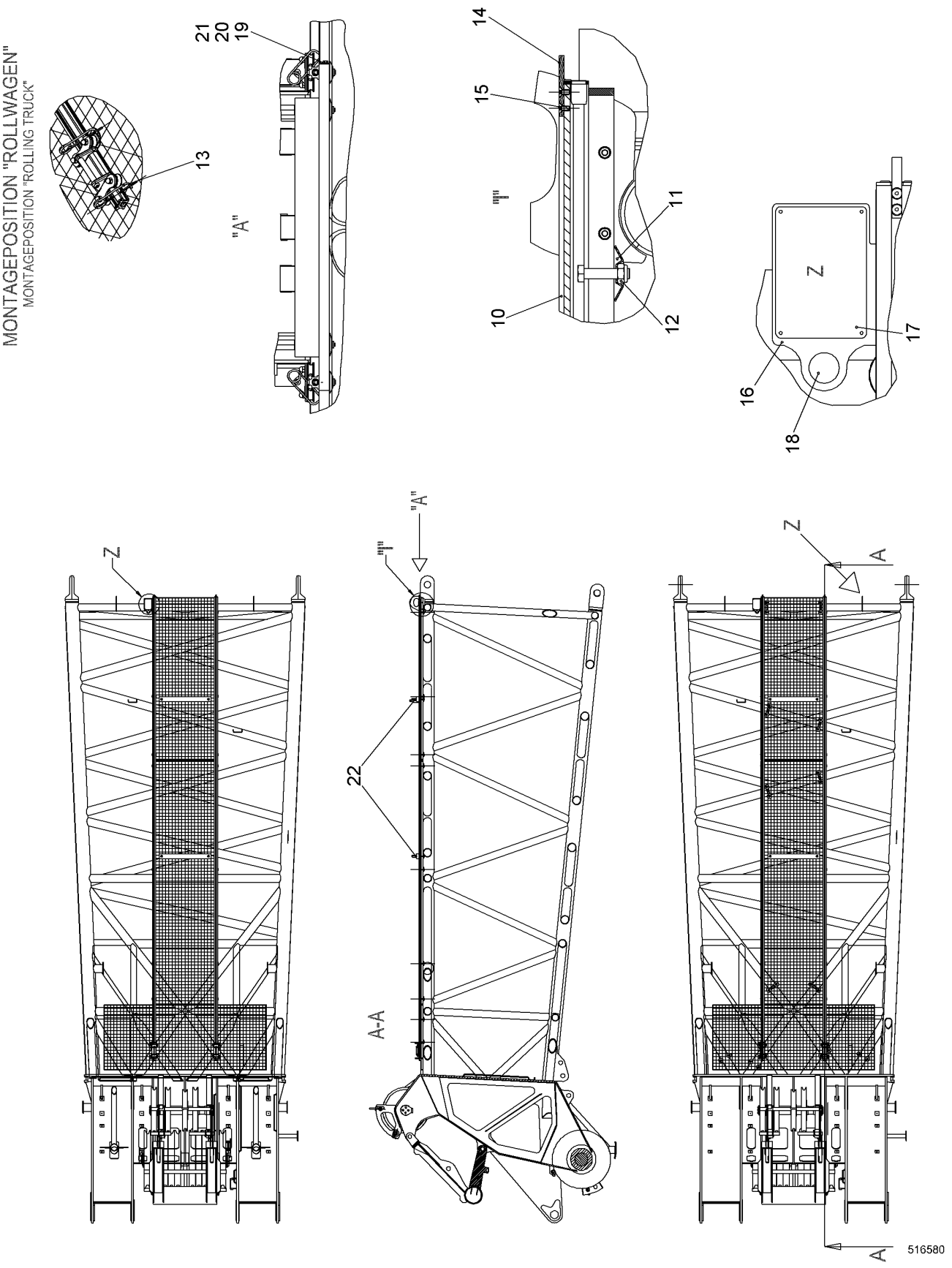

24.5.2017 516580	**138376_ETK_001**	656 (1/2)
LIEBHERR	**FALL PROTECTION RFK** **STURZSICHERUNG NRS**	**10 55 514 8**

Pos.	Item	Quantity	Description	Bezeichnung	Serie	K
10	10564692	2	RAIL CPL	SCHIENE KPL		
11	10098157	18	DISH	TELLER		
12	10540494	18	HEX NUT ISO 10511 M10 A4	SECHSKANTMUTTER		
13	433101208	4	RETAINING SPRING 4MM	SICHERUNGSFEDER		
14	10566932	2	LIMIT STOP	ANSCHLAG		
15	10348867	4	COUNTERSUNK SCREW ISO 10642 M5X10 A4	SENKSCHRAUBE		
16	11228766	1	SIGN	SCHILD		
17	11228726	1	ADHESIVE SIGN	KLEBESCHILD		
18	11228734	1	ADHESIVE SIGN	KLEBESCHILD		
19	420000414	4	WASHER ISO 7089 6 A4	SCHEIBE		
20	406532614	2	HEX SCREW ISO 4017 M6X20 A4-70	SECHSKANTSCHRAUBE		
21	10540492	2	HEX NUT ISO 10511 M6 A4	SECHSKANTMUTTER		
22	11238277	2	ROPE GUARD ⇨ ❑ 652	SEILSCHUTZ		

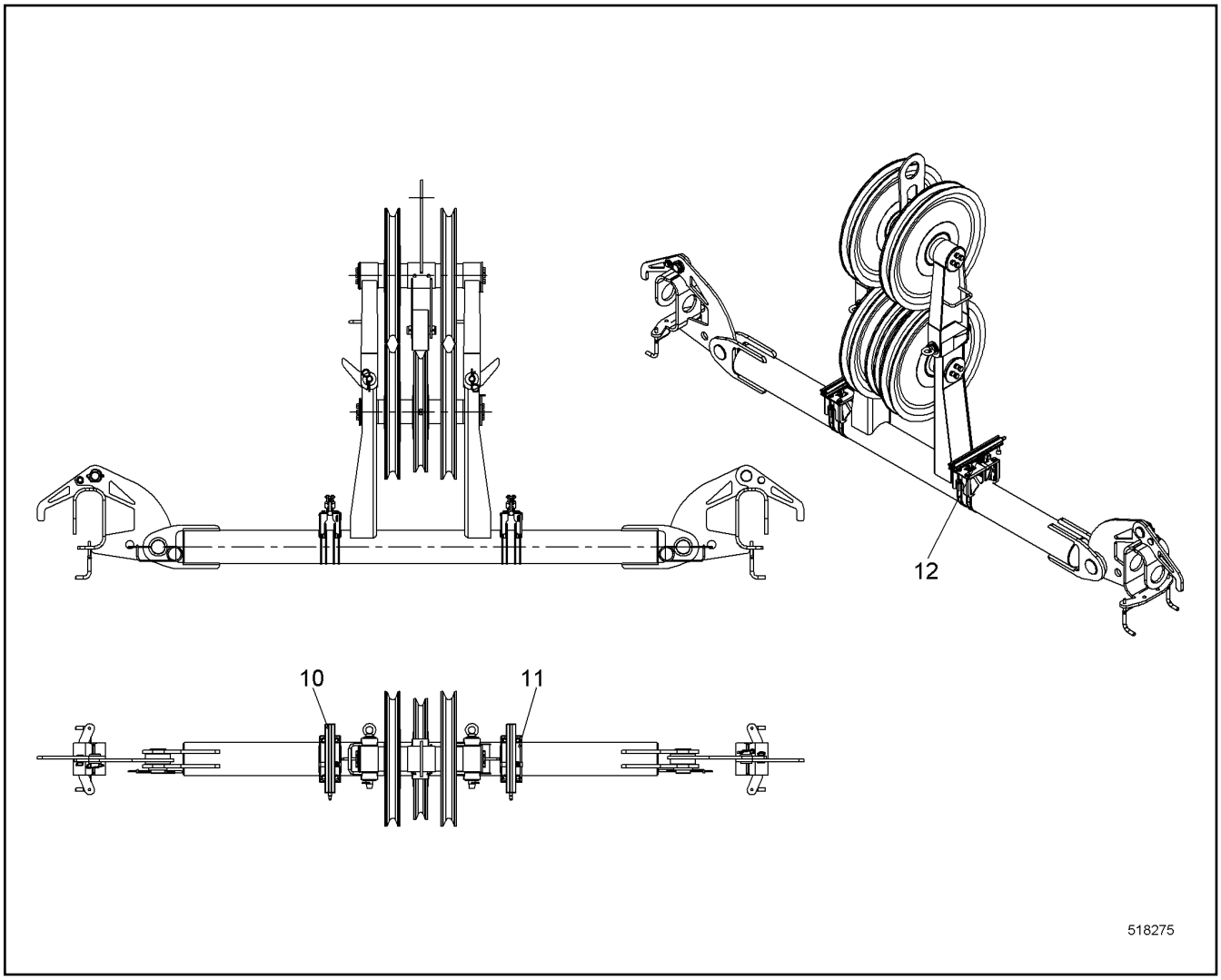

Pos.	Item	Quantity	Description	Bezeichnung	Serie	K
10	10557413	2	RAIL CPL	SCHIENE KPL		
11	11269018	2	HOLDER CPL ⇨ ❑ 659	HALTER KPL		
12	10538796	2	HEX SCREW ISO 4017 M6X8 A4-70	SECHSKANTSCHRAUBE		

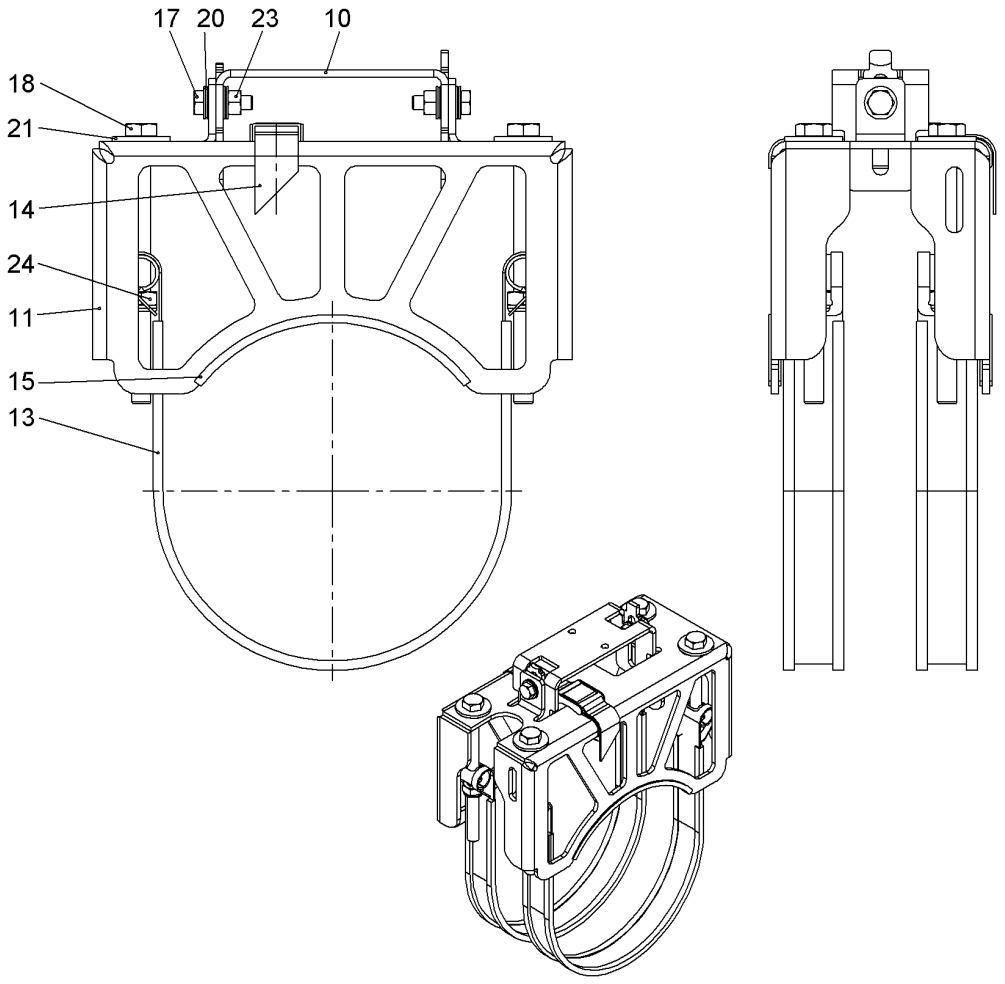

Pos.	Item	Quantity	Description	Bezeichnung	Serie	K
10	11268967	1	WP	WP		
13	10531873	2	TIGHTENING STRAP HINGE PIN	GELENKBOLZENSPANNBAND		
14	7621780	1	LASHING STRAP	ZURRGURT		
15	10352462	0.22	FLEXIBLE EDGE PROTECTOR	KANTENSCHUTZ FLEXIBEL		
17	406532614	2	HEX SCREW ISO 4017 M6X20 A4-70	SECHSKANTSCHRAUBE		
18	10331507	4	HEX SCREW ISO 4017 M8X65 A4-70	SECHSKANTSCHRAUBE		
20	10536576	4	WEDGE LOCK WASHER M6 254 SMO;EN 1008	KEILSICHERUNGSSCHEIBE		
21	10540510	4	WASHER ISO 7093-1 8 A4	SCHEIBE		
23	411517114	2	HEX NUT ISO 4032 M6 A4-70	SECHSKANTMUTTER		
24	10540493	4	HEX NUT ISO 10511 M8 A4	SECHSKANTMUTTER		

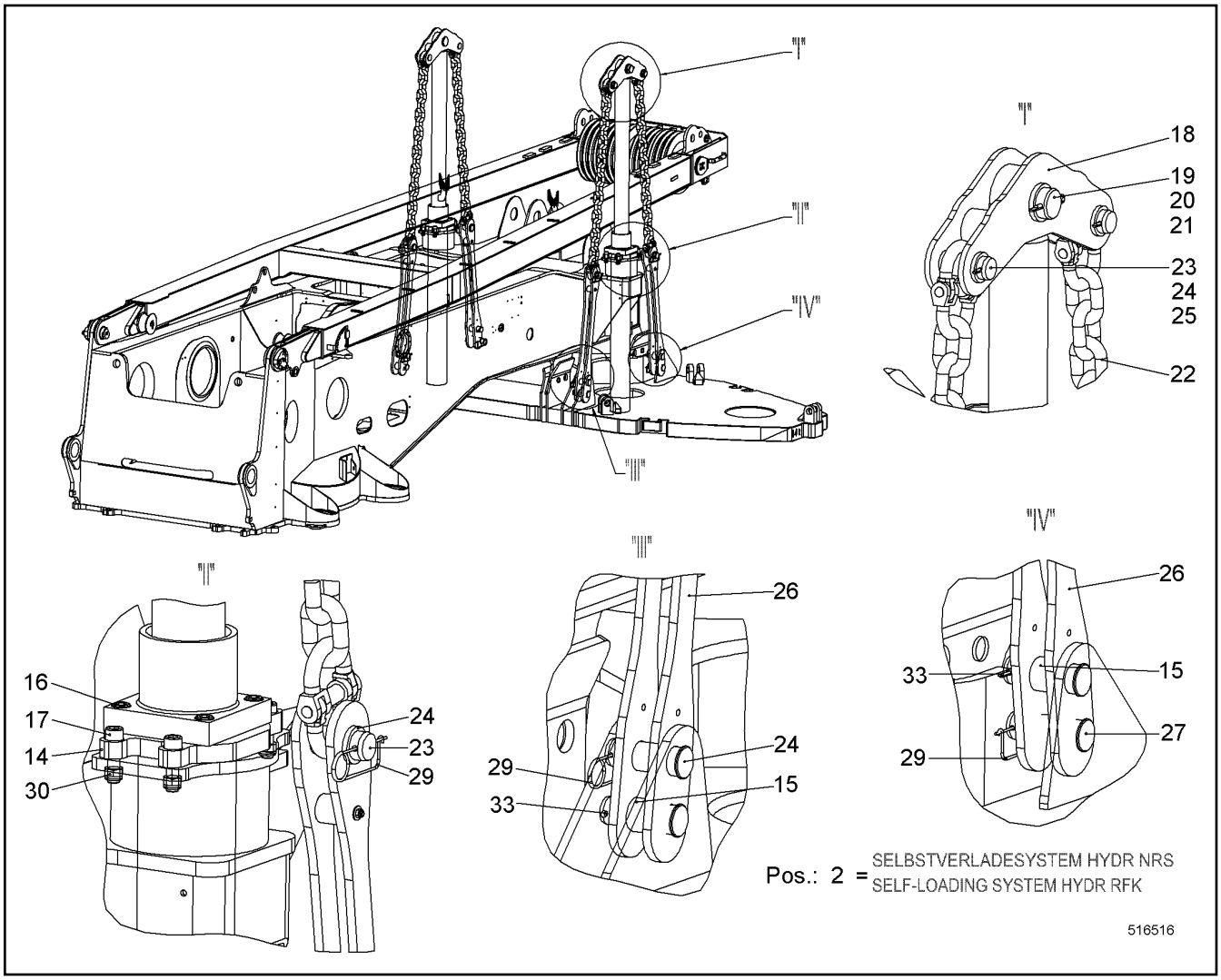

Pos.	Item	Quantity	Description	Bezeichnung	Serie	K
2	10519712	1	SELF-LOADING SYSTEM HYDR RFK ⇨ ❑ 661	SELBSTVERLADESYSTEM HYDR		
4	11229709	1	HOSE LIST ⇨ ❑ 663	SCHLAUCHLISTE		
14	959571914	2	ADAPTER PLATE	ADAPTERBLECH		
16	10544113	8	SOCKET HEAD SCREW ISO 4762 M24X60 10.9	ZYLINDERSCHRAUBE		
17	10544121	8	SOCKET HEAD SCREW ISO 4762 M24X100 10.	ZYLINDERSCHRAUBE		
18	992751514	2	LEVER ST.CONST.	HEBEL SCHWK		
19	485518914	2	PIN DIN EN 22341-B 80H11X160 34CRNIMO6;E	BOLZEN		
20	421103814	2	WASHER DIN EN 28738 80 ST;	SCHEIBE		
21	433011114	2	SPLIT PIN ISO 1234 13X112 A4	SPLINT		
22	10350940	4	CHAIN CPL	KETTE KPL		
23	956711314	8	PIN	BOLZEN		
24	421103514	12	WASHER DIN EN 28738 60 ST;	SCHEIBE		
25	433010314	4	SPLIT PIN ISO 1234 10X80 A4	SPLINT		
26	993560614	4	MOUNTING LINK CPL ⇨ ❑ 664	LASCHE KPL		
27	959799614	8	PIN RD68X175 LHRD900-40;10019758	BOLZEN		
29	433102508	8	RETAINING SPRING 5MM	SICHERUNGSFEDER		
30	10544159	8	HEX NUT DIN 985 M24 10	SECHSKANTMUTTER		
33	433009714	4	SPLIT PIN ISO 1234 8X90	SPLINT		

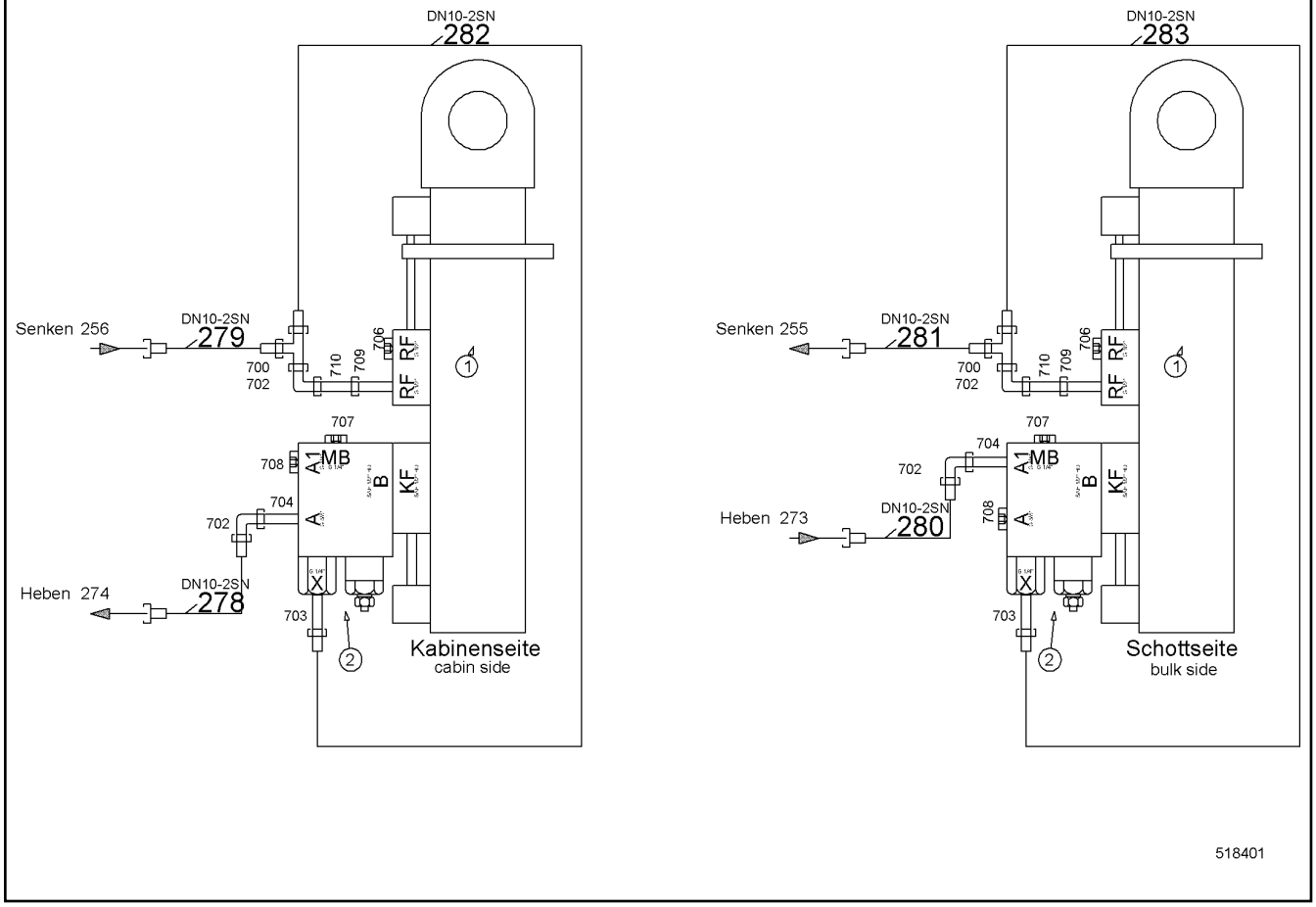

Pos.	Item	Quantity	Description	Bezeichnung	Serie	K
1	10227855	2	DOUBLE-ACTING CYL ⇨ ❑ 662	DOPPELWIRKZYL		
2	10226750	2	LOWERING BRAKE VALVE	SENKBREMSVENTIL		
700	7617461	2	FITTING	VERSCHRAUBUNG		
702	7617354	4	FITTING	VERSCHRAUBUNG		
703	471004514	2	FITTING	VERSCHRAUBUNG		
704	471032708	2	FITTING	VERSCHRAUBUNG		
706	247112702	2	FITTING	VERSCHRAUBUNG		
707	247117302	2	FITTING	VERSCHRAUBUNG		
708	247128402	2	FITTING	VERSCHRAUBUNG		
709	471033214	2	FITTING	VERSCHRAUBUNG		
710	485433314	2	FITTING	VERSCHRAUBUNG		

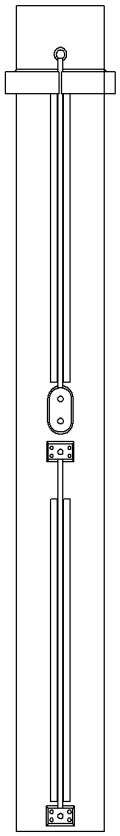

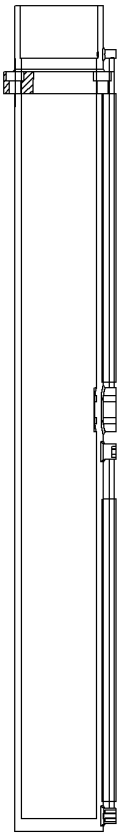

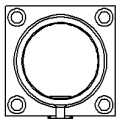

Pos.:1 = DS KPL ZYL
SEALING SET CPL CYL

610754

Pos.	Item	Quantity	Description	Bezeichnung	Serie	K
1	10352447	1	SEALING SET CPL CYL	DS KPL ZYL		

ACHTUNG !
ATTENTION !
ATTENTION !
ATENCIÓN !
ATENÇÃO !
ВНИМАНИЕ

Für Schlauchbestellungen kann über die Schlauchnummer, in der entsprechenden Schlauchliste, die Identnummer festgestellt werden.

For ordering flexible hoses you can find the identification number through the hose-number in the corresponding hose-list.

Pour des ordres de tuyau flexible le nombre d'identification on voit dans la liste de tuyau flexible correspondente.

Para el pedido de manguera, indicar el número de identificación de la manguera de la lista respectiva.

Para se encomendar uma mangueira, consulte o número de identificaçao na respectiva lista de mangueiras.

Для оформления заказов на шланги/рукавы идент. № может быть определен при помощи номера шланга/рукава, указанного в соотетствующем перечне шлангов/рукавов.

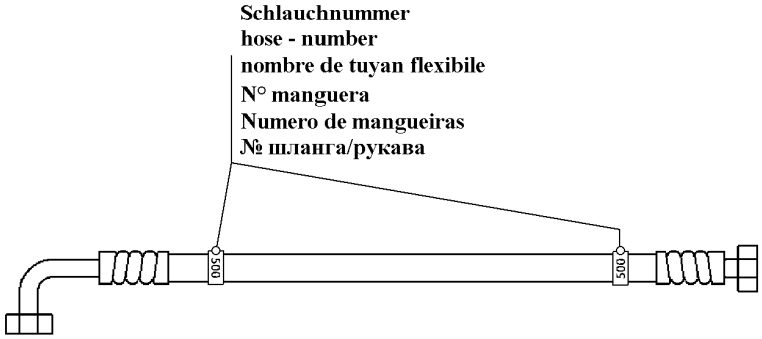

500000

Pos.	Item	Quantity	Description	Bezeichnung	Serie	K
278	928204714	1	HOSE CPL	SCHLAUCH KPL		
279	992296514	1	HOSE CPL	SCHLAUCH KPL		
280	918248414	1	HOSE CPL	SCHLAUCH KPL		
281	995175314	1	HOSE CPL	SCHLAUCH KPL		
282	991109014	1	HOSE CPL	SCHLAUCH KPL		
283	991109014	1	HOSE CPL	SCHLAUCH KPL		

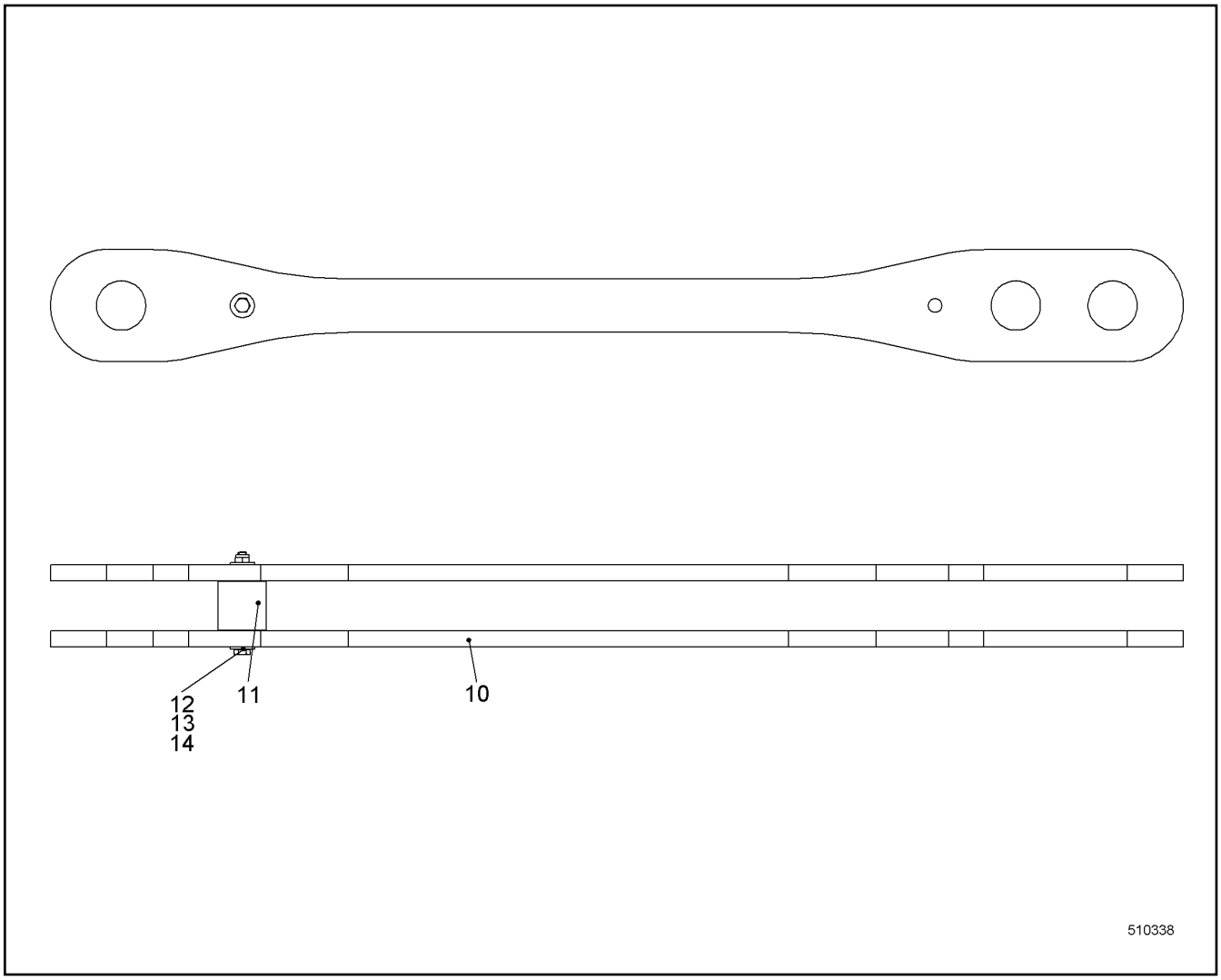

Pos.	Item	Quantity	Description	Bezeichnung	Serie	K
10	950610714	2	BUTT STRAP	LASCHE		
12	10540511	2	WASHER ISO 7093-1 10 A4	SCHEIBE		
13	10539960	1	HEX SCREW ISO 4017 M10X120 A4-70	SECHSKANTSCHRAUBE		
14	10540494	1	HEX NUT ISO 10511 M10 A4	SECHSKANTMUTTER		

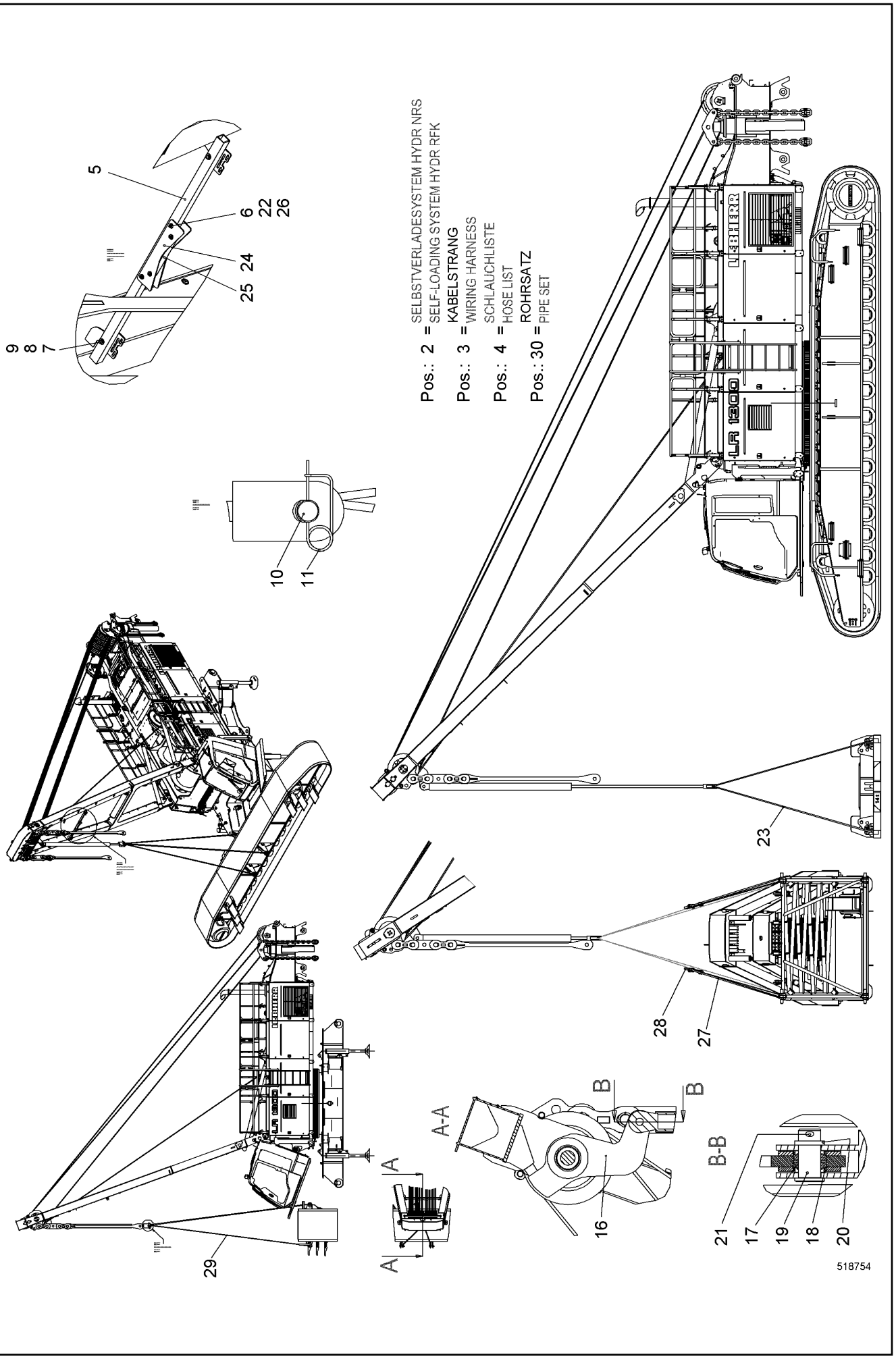
Pos.: 2 = SELBSTVERLADESYSTEM HYDR NRS
SELF-LOADING SYSTEM HYDR RFK
Pos.: 3 = KABELSTRANG
WIRING HARNESS
Pos.: 4 = SCHLAUCHLISTE
HOSE LIST
Pos.: 30 = ROHRSATZ
PIPE SET
LR 1300
A-A
B-B
518754

Pos.	Item	Quantity	Description	Bezeichnung	Serie	K
2	10519738	1	SELF-LOADING SYSTEM HYDR RFK ⇨ ❑ 667	SELBSTVERLADESYSTEM HYDR		
4	992774714	1	HOSE LIST ⇨ ❑ 674	SCHLAUCHLISTE		
5	10557117	1	SQUARE TUBE	VIERKANTROHR		
6	10540493	4	HEX NUT ISO 10511 M8 A4	SECHSKANTMUTTER		
7	10540511	4	WASHER ISO 7093-1 10 A4	SCHEIBE		
8	10539293	2	HEX SCREW ISO 4017 M10X75 A4-70	SECHSKANTSCHRAUBE		
9	10540494	2	HEX NUT ISO 10511 M10 A4	SECHSKANTMUTTER		
10	949351814	1	PIN 63X120 LHRD900-40;10019758	BOLZEN		
11	433105008	1	RETAINING SPRING DIN 2194 6MM FS	SICHERUNGSFEDER		
16	11890636	1	HOISTING STRAP CPL	HUBLASCHE KPL		
17	746913614	1	SPHERICAL BEARING	GELENKLAGER		
19	485519214	1	PIN DIN EN 22341-B 50H11X110 34CRNIMO6;E	BOLZEN		
20	421103314	1	WASHER DIN EN 28738 50 ST;	SCHEIBE		
21	433010314	1	SPLIT PIN ISO 1234 10X80 A4	SPLINT		
22	10541592	4	HEX SCREW ISO 4017 M8X75 A4-70	SECHSKANTSCHRAUBE		
23	797027814	1	BALLAST CHAIN	BALLASTIERGEHAENGE		
24	10540513	2	SHEET	PLATTE		
25	11228227	1	SHEET	PLATTE		
26	10540510	8	WASHER ISO 7093-1 8 A4	SCHEIBE		
27	10280543	4	ROUND SLING	RUNDSCHLINGE		
28	773935814	4	SHACKLE	SCHAEKEL		
29	790365114	1	ROUND SLING	RUNDSCHLINGE		
30	10227437	1	PIPE SET	ROHRSATZ		

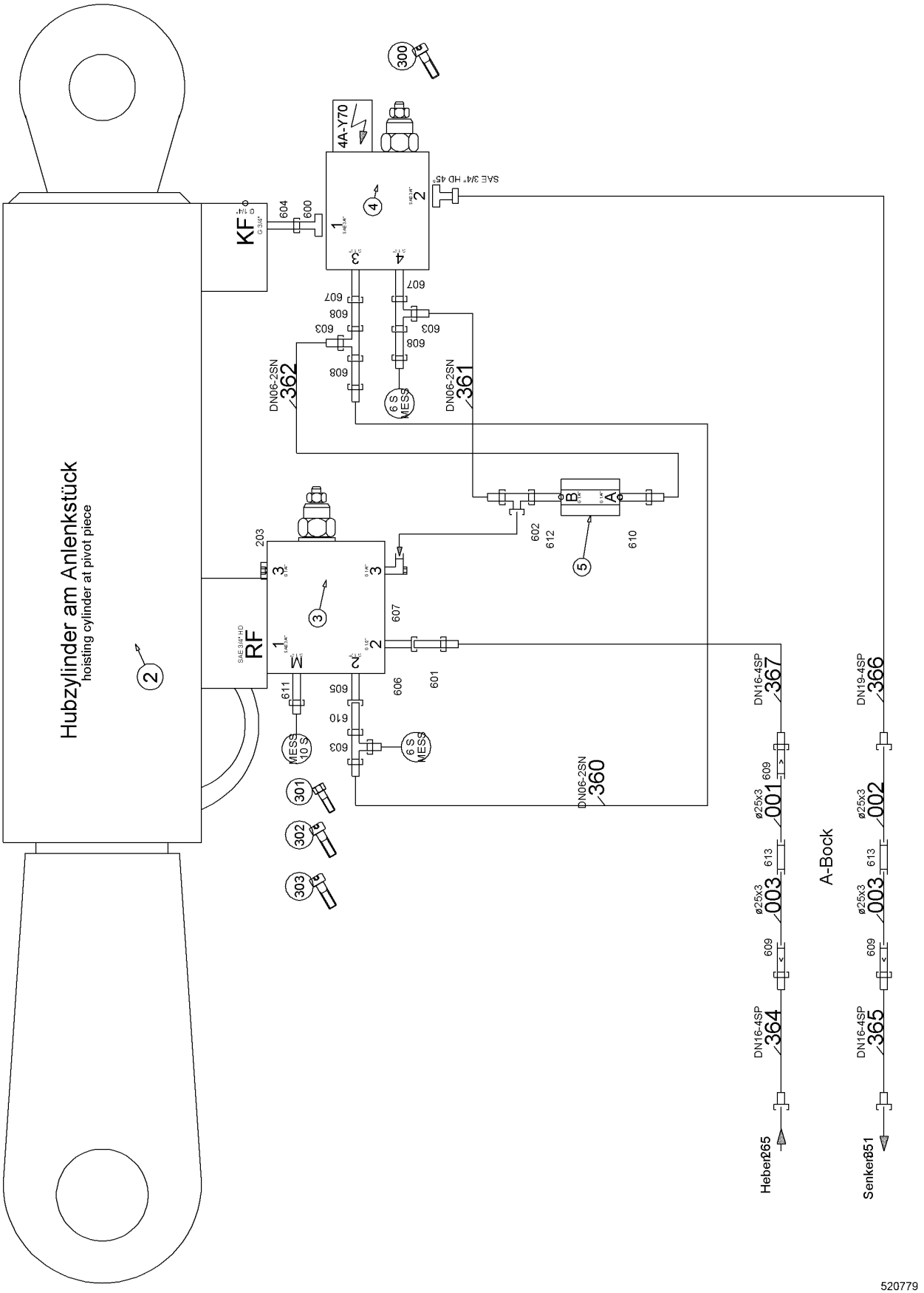
Hubzylinder am Anlenkstück
hoisting cylinder at pivot piece
KF
RF
4A-Y70
SAE 3/4" HD 45°
DN06-2SN
362
DN06-2SN
361
DN06-2SN
360
DN16-4SP
367
DN19-4SP
366
DN16-4SP
364
DN16-4SP
365
ø25x3
001
ø25x3
002
ø25x3
003
ø25x3
003
A-Bock
Heben265
Senken851
6 S
MESS
MESS
10 S
520779

Pos.	Item	Quantity	Description	Bezeichnung	Serie	K
2	592104214	1	DOUBLE-ACTING CYL ⇨ ❑ 669	DOPPELWIRKZYL		
3	511640414	1	LOWERING BRAKE VALVE ⇨ ❑ 670	SENKBREMSVENTIL		
4	592158414	1	LOWERING BRAKE VALVE ⇨ ❑ 672	SENKBREMSVENTIL		
5	592178314	1	RESTRICTOR VALVE	DROSSELVENTIL		
201	510695314	2	GAUGE CONNECTION	MESSSTUTZEN		
202	510694514	1	GAUGE CONNECTION	MESSSTUTZEN		
203	247117302	1	FITTING	VERSCHRAUBUNG		
300	4043014	2	SOCKET HEAD SCREW ISO 4762 M10X140 10.	ZYLINDERSCHRAUBE		
301	4002195	2	HEX SCREW ISO 4014 M10X100 10.9	SECHSKANTSCHRAUBE		
302	4900980	2	SOCKET HEAD SCREW ISO 4762 M10X75 10.9	ZYLINDERSCHRAUBE		
303	4002442	2	SOCKET HEAD SCREW ISO 4762 M10X130 10.	ZYLINDERSCHRAUBE		
600	510709114	1	FITTING	VERSCHRAUBUNG		
601	491033414	1	FITTING	VERSCHRAUBUNG		
602	482431214	1	FITTING	VERSCHRAUBUNG		
603	482331114	3	FITTING	VERSCHRAUBUNG		
604	481930714	1	FITTING	VERSCHRAUBUNG		
605	247042402	1	FITTING	VERSCHRAUBUNG		
606	475501914	1	FITTING	VERSCHRAUBUNG		
607	473210214	3	FITTING	VERSCHRAUBUNG		
608	472531508	3	FITTING	VERSCHRAUBUNG		
609	475033014	3	FITTING	VERSCHRAUBUNG		
610	471032108	2	FITTING	VERSCHRAUBUNG		
611	471004514	1	FITTING	VERSCHRAUBUNG		
612	481930314	1	FITTING	VERSCHRAUBUNG		
613	247001802	2	FITTING	VERSCHRAUBUNG		
614	510587514	2	FLANGE HALF	FLANSCHHAELFTE		
615	10490784	1	RECTANGULAR SECTION RING	RECHTECKRING		
616	4001246	4	HEX SCREW ISO 4017 M10X35 10.9	SECHSKANTSCHRAUBE		

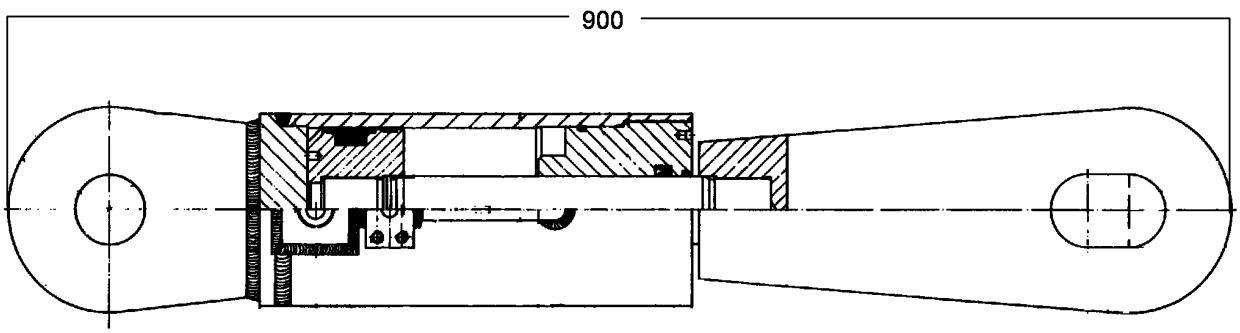

602143

Pos.	Item	Quantity	Description	Bezeichnung	Serie	K
900	790407814	1	SEALING SET CPL CYL	DS KPL ZYL		

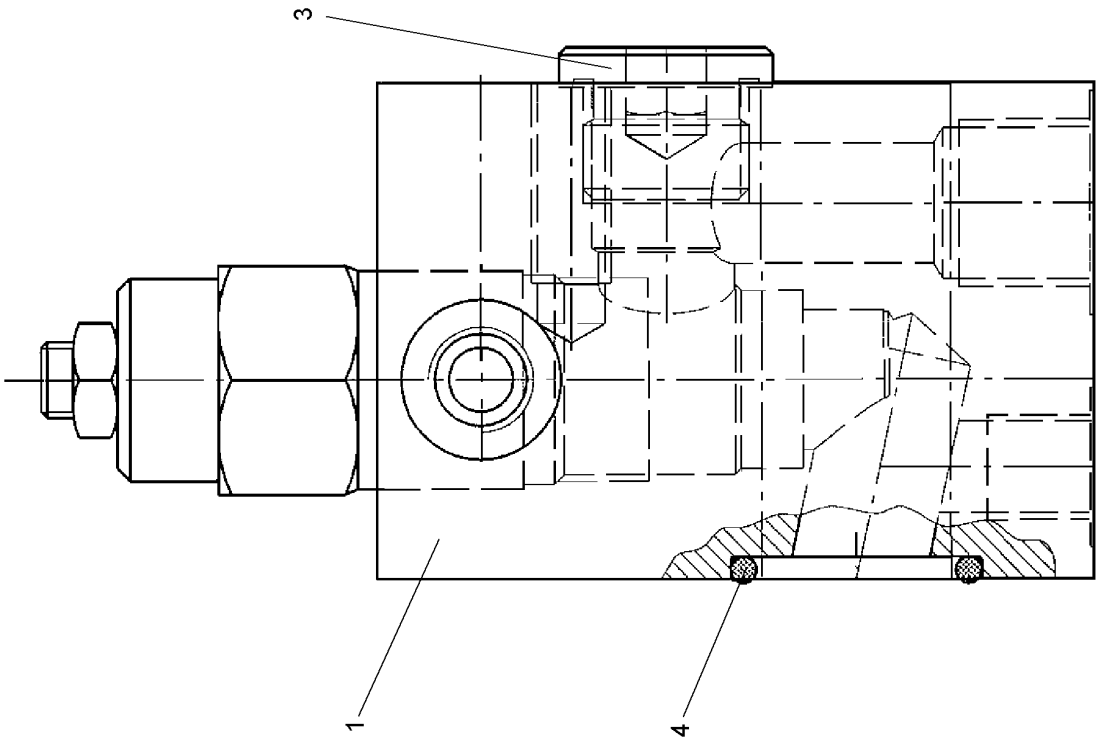

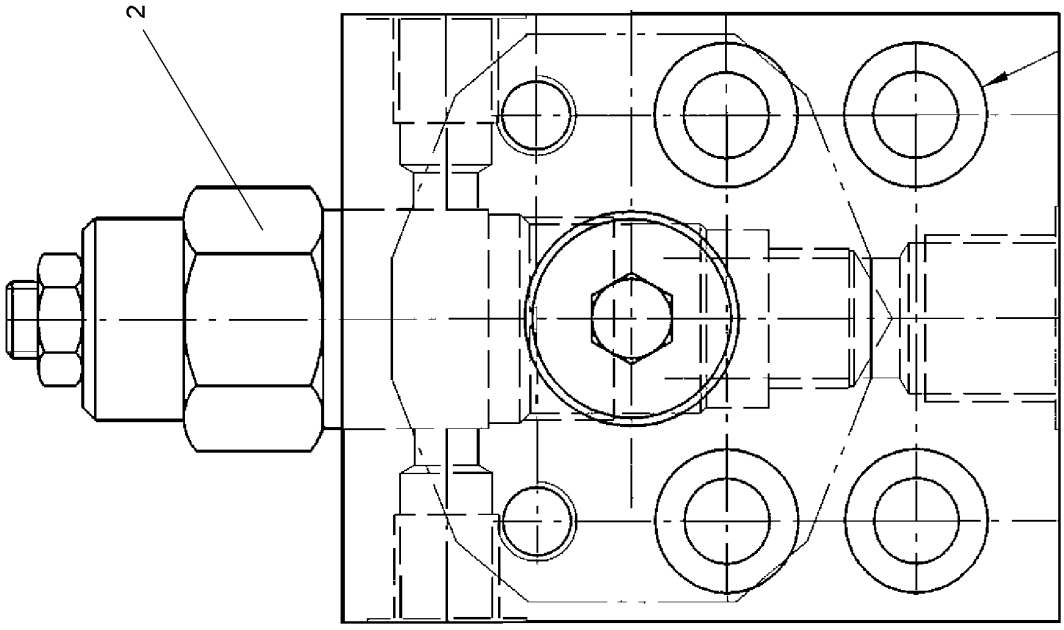

607341

Pos.	Item	Quantity	Description	Bezeichnung	Serie	K
1	11239912	1	HOUSING	GEHAEUSE		
2	11239880	1	LOWERING BRAKE VALVE	SENKBREMSVENTIL		
3	11239915	1	SCREW PLUG DIN 908 G1/2	VERSCHLUSSSCHRAUBE		
4	11239916	1	O-RING	O-RING		

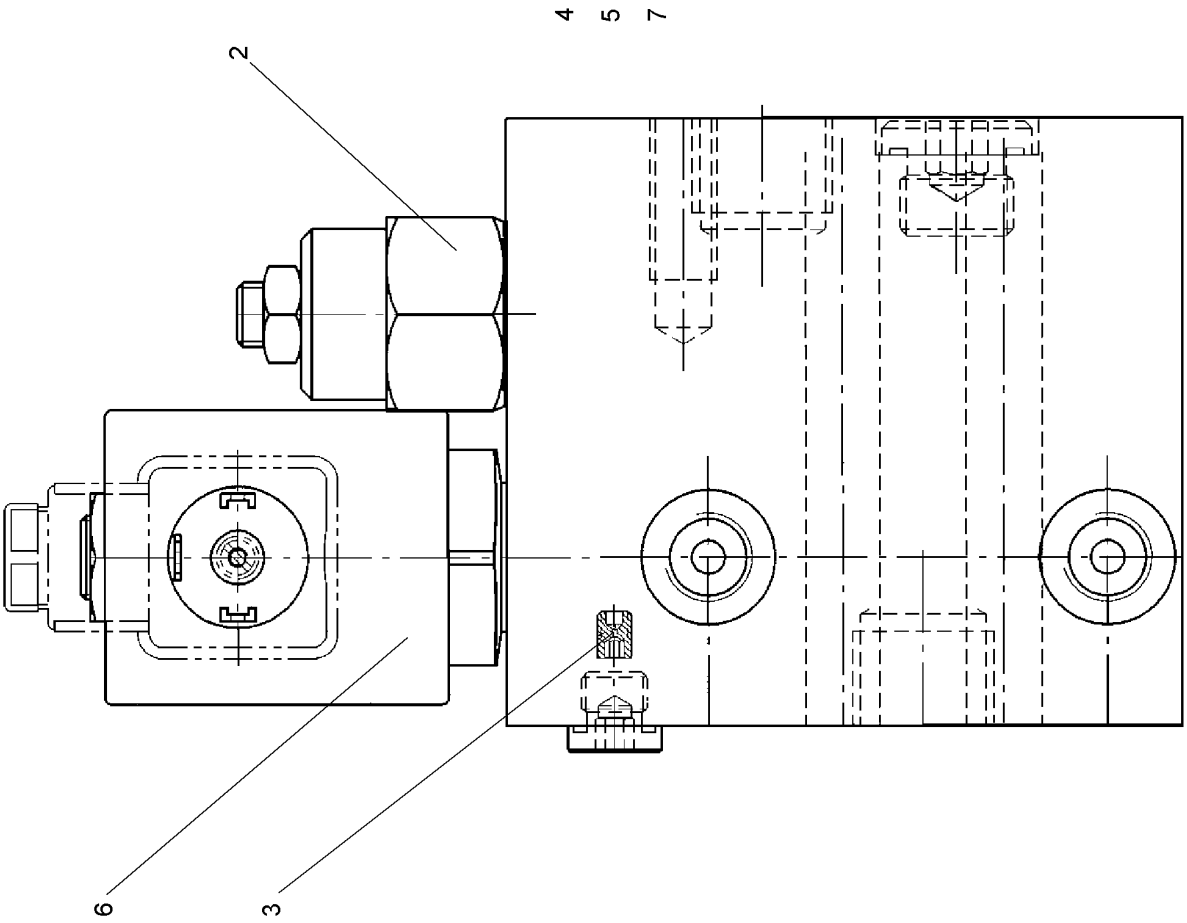

607342

Pos.	Item	Quantity	Description	Bezeichnung	Serie	K
2	11239880	1	LOWERING BRAKE VALVE	SENKBREMSVENTIL		
3	11239895	1	NOZZLE	DUESE		
4	11239897	1	SCREW PLUG DIN 908 G3/8	VERSCHLUSSSCHRAUBE		
5	11239904	1	SCREW PLUG DIN 908 G1/8	VERSCHLUSSSCHRAUBE		
6	11226980	1	SOLENOID VALVE	MAGNETVENTIL		
7	11239908	1	CAP	KAPPE		

ACHTUNG !
ATTENTION !
ATTENTION !
ATENCIÓN !
ATENÇÃO !
ВНИМАНИЕ

Für Schlauchbestellungen kann über die Schlauchnummer, in der entsprechenden Schlauchliste, die Identnummer festgestellt werden.

For ordering flexible hoses you can find the identification number through the hose-number in the corresponding hose-list.

Pour des ordres de tuyau flexible le nombre d'identification on voit dans la liste de tuyau flexible correspondente.

Para el pedido de manguera, indicar el número de identificación de la manguera de la lista respectiva.

Para se encomendar uma mangueira, consulte o número de identificaçao na respectiva lista de mangueiras.

Для оформления заказов на шланги/рукавы идент. № может быть определен при помощи номера шланга/рукава, указанного в соотетствующем перечне шлангов/рукавов.

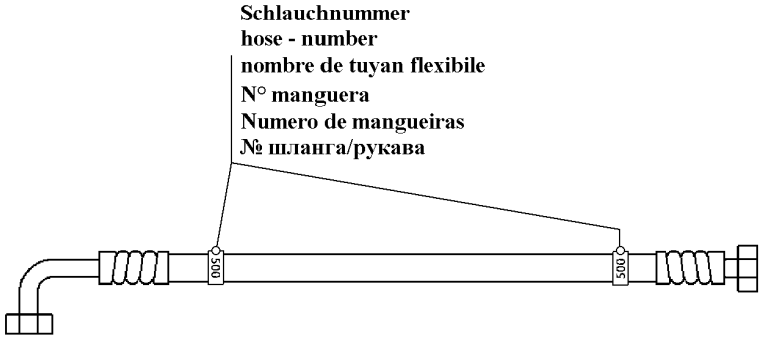

500000

Pos.	Item	Quantity	Description	Bezeichnung	Serie	K
1	10518558	3	ADHESIVE LABEL	HAFTETIKETTE		
360	928619114	1	HOSE CPL	SCHLAUCH KPL		
361	990055814	1	HOSE CPL	SCHLAUCH KPL		
362	990055914	1	HOSE CPL	SCHLAUCH KPL		
364	919126414	1	HOSE CPL	SCHLAUCH KPL		
365	919126414	1	HOSE CPL	SCHLAUCH KPL		
366	992857714	1	HOSE CPL	SCHLAUCH KPL		
367	992837314	1	HOSE CPL	SCHLAUCH KPL		

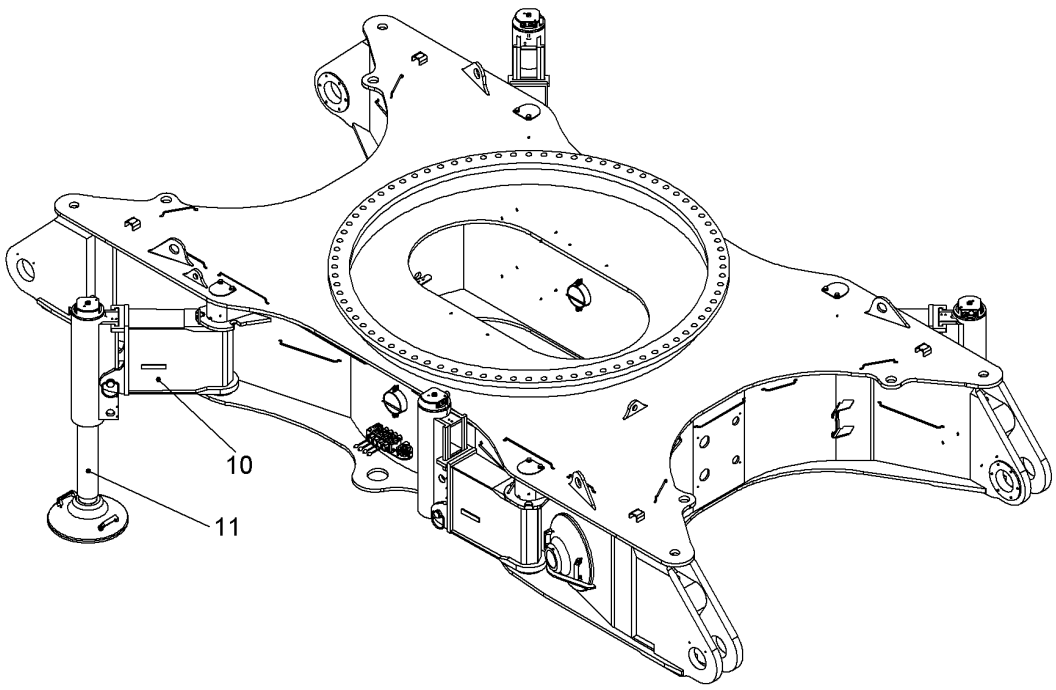

Pos.	Item	Quantity	Description	Bezeichnung	Serie	K
10	11895685	1	SELF-LOADING SYSTEM RFK ⇨ ❑ 676	SELBSTVERLADESYSTEM NRS		
11	11895687	1	SELF-LOADING SYSTEM RFK ⇨ ❑ 682	SELBSTVERLADESYSTEM NRS		

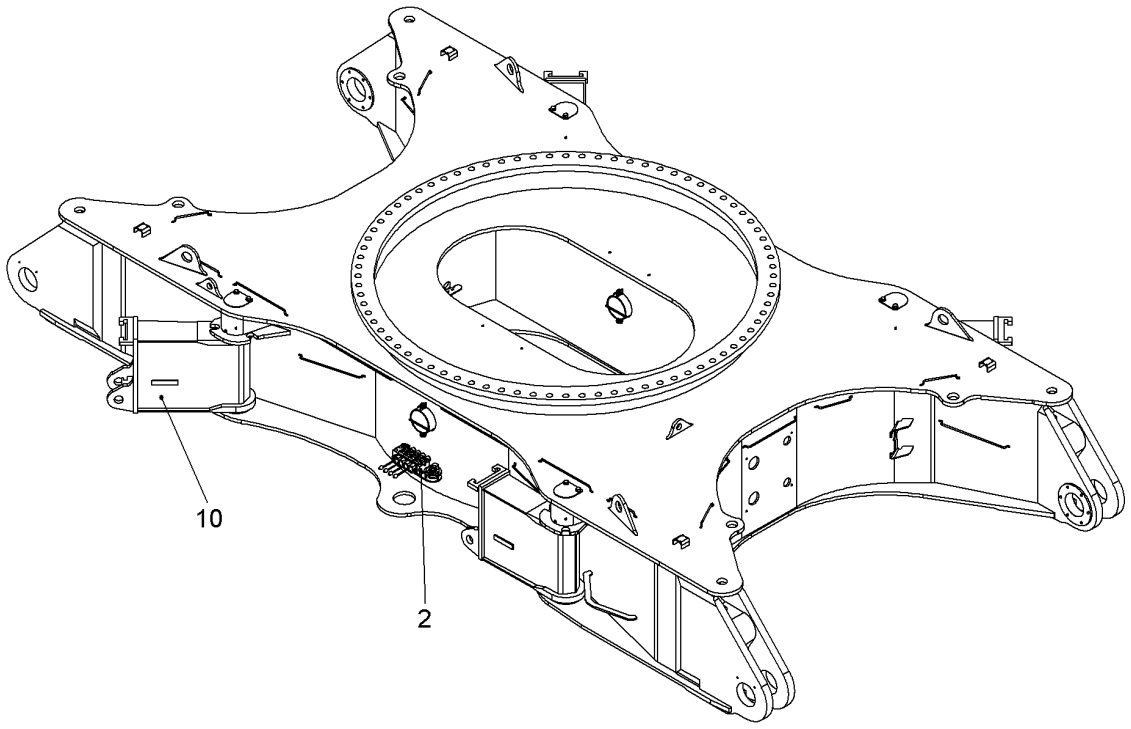

Pos.: 4 = SCHLAUCHLISTE / HOSE LIST

520420

Pos.	Item	Quantity	Description	Bezeichnung	Serie	K
2	11894080	1	JACK-UP SYSTEM HYDR RFK ⇨ ❑ 677	JACK-UP SYSTEM HYDR NRS		
4	11247790	1	HOSE LIST ⇨ ❑ 679	SCHLAUCHLISTE		
10	11895686	1	SELF-LOADING SYSTEM RFK ⇨ ❑ 680	SELBSTVERLADESYSTEM NRS		

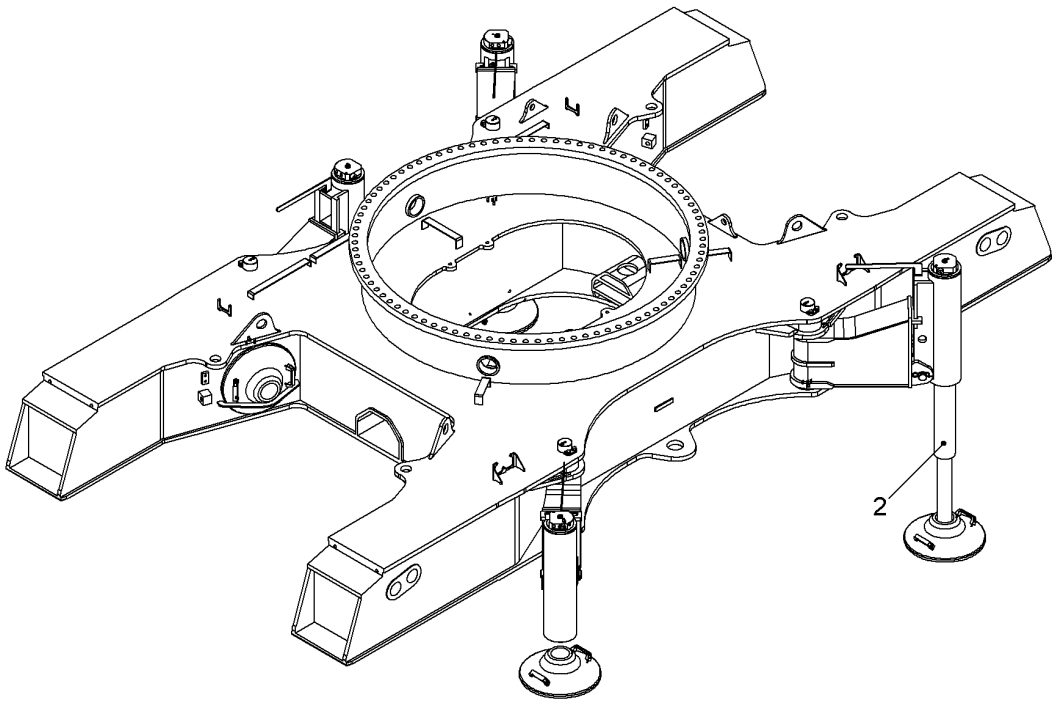

Pos.	Item	Quantity	Description	Bezeichnung	Serie	K
2	11894083	1	TUBING HYDR ⇨ ❑ 678	VERROHRUNG HYDR		

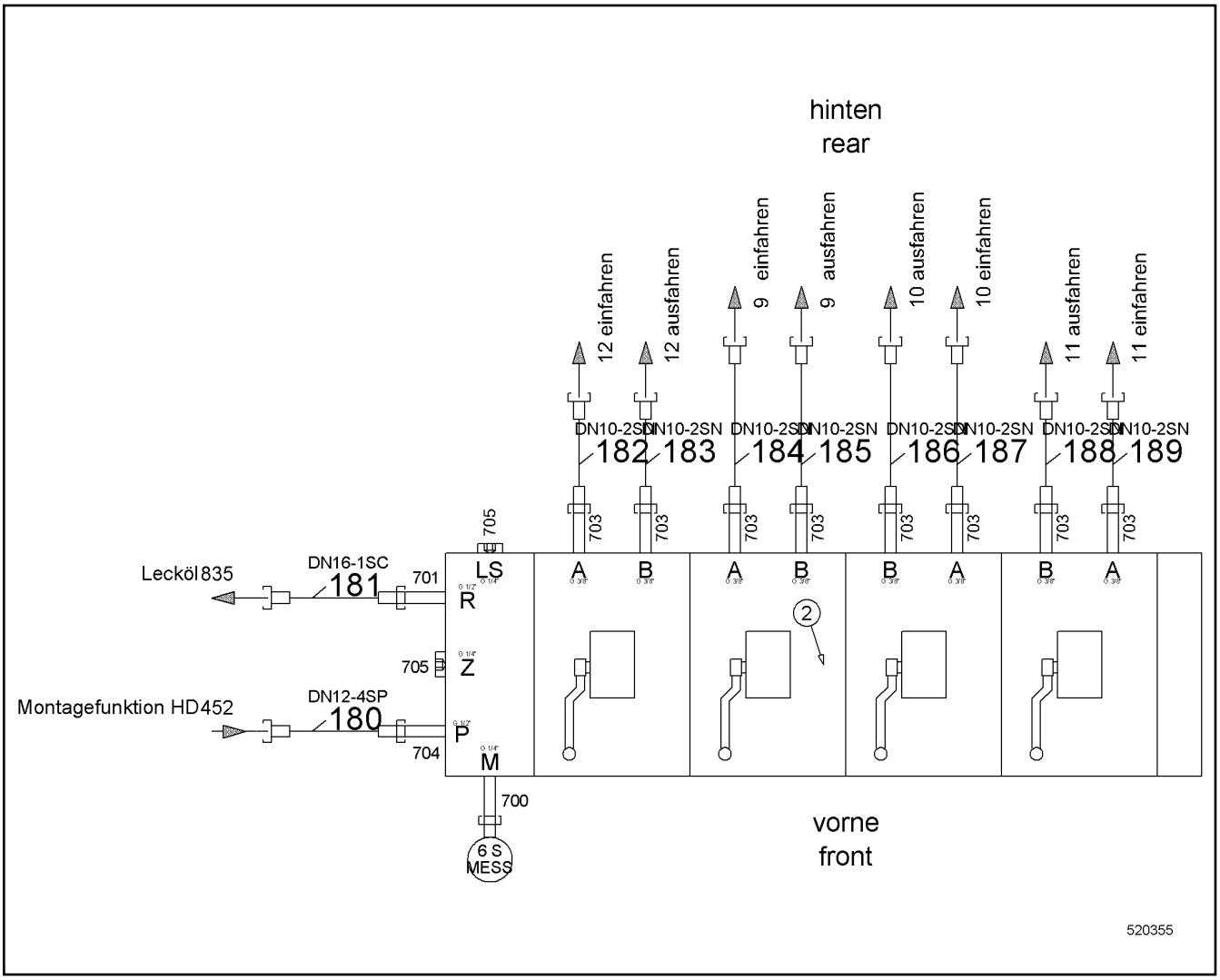

Pos.	Item	Quantity	Description	Bezeichnung	Serie	K
2	10224607	1	DIRECTIONAL CTRL. VALVE	WEGESCHIEBER		
700	473210214	1	FITTING	VERSCHRAUBUNG		
701	247009702	1	FITTING	VERSCHRAUBUNG		
703	471032708	8	FITTING	VERSCHRAUBUNG		
704	471033214	1	FITTING	VERSCHRAUBUNG		
705	247117302	2	FITTING	VERSCHRAUBUNG		
706	510695314	1	GAUGE CONNECTION	MESSSTUTZEN		

ACHTUNG !
ATTENTION !
ATTENTION !
ATENCIÓN !
ATENÇÃO !
ВНИМАНИЕ

Für Schlauchbestellungen kann über die Schlauchnummer, in der entsprechenden Schlauchliste, die Identnummer festgestellt werden.

For ordering flexible hoses you can find the identification number through the hose-number in the corresponding hose-list.

Pour des ordres de tuyau flexible le nombre d'identification on voit dans la liste de tuyau flexible correspondente.

Para el pedido de manguera, indicar el número de identificación de la manguera de la lista respectiva.

Para se encomendar uma mangueira, consulte o número de identificaçao na respectiva lista de mangueiras.

Для оформления заказов на шланги/рукавы идент. № может быть определен при помощи номера шланга/рукава, указанного в соотетствующем перечне шлангов/рукавов.

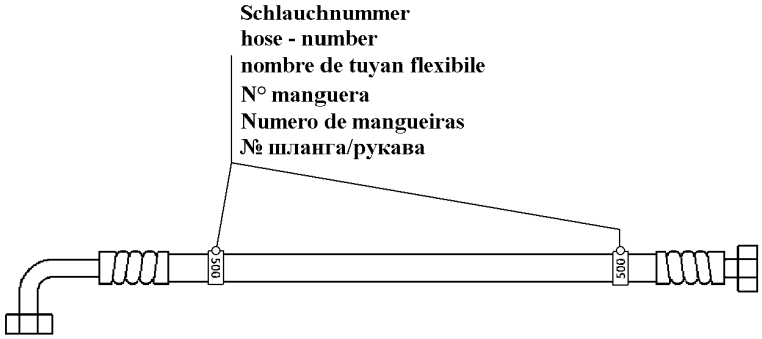

500000

Pos.	Item	Quantity	Description	Bezeichnung	Serie	K
180	992273614	1	HOSE CPL	SCHLAUCH KPL		
181	919144714	1	HOSE CPL	SCHLAUCH KPL		
182	993758914	1	HOSE CPL	SCHLAUCH KPL		
183	993758914	1	HOSE CPL	SCHLAUCH KPL		
184	995226814	1	HOSE CPL	SCHLAUCH KPL		
185	919736714	1	HOSE CPL	SCHLAUCH KPL		
186	919736714	1	HOSE CPL	SCHLAUCH KPL		
187	995226814	1	HOSE CPL	SCHLAUCH KPL		
188	993758914	1	HOSE CPL	SCHLAUCH KPL		
189	993758914	1	HOSE CPL	SCHLAUCH KPL		

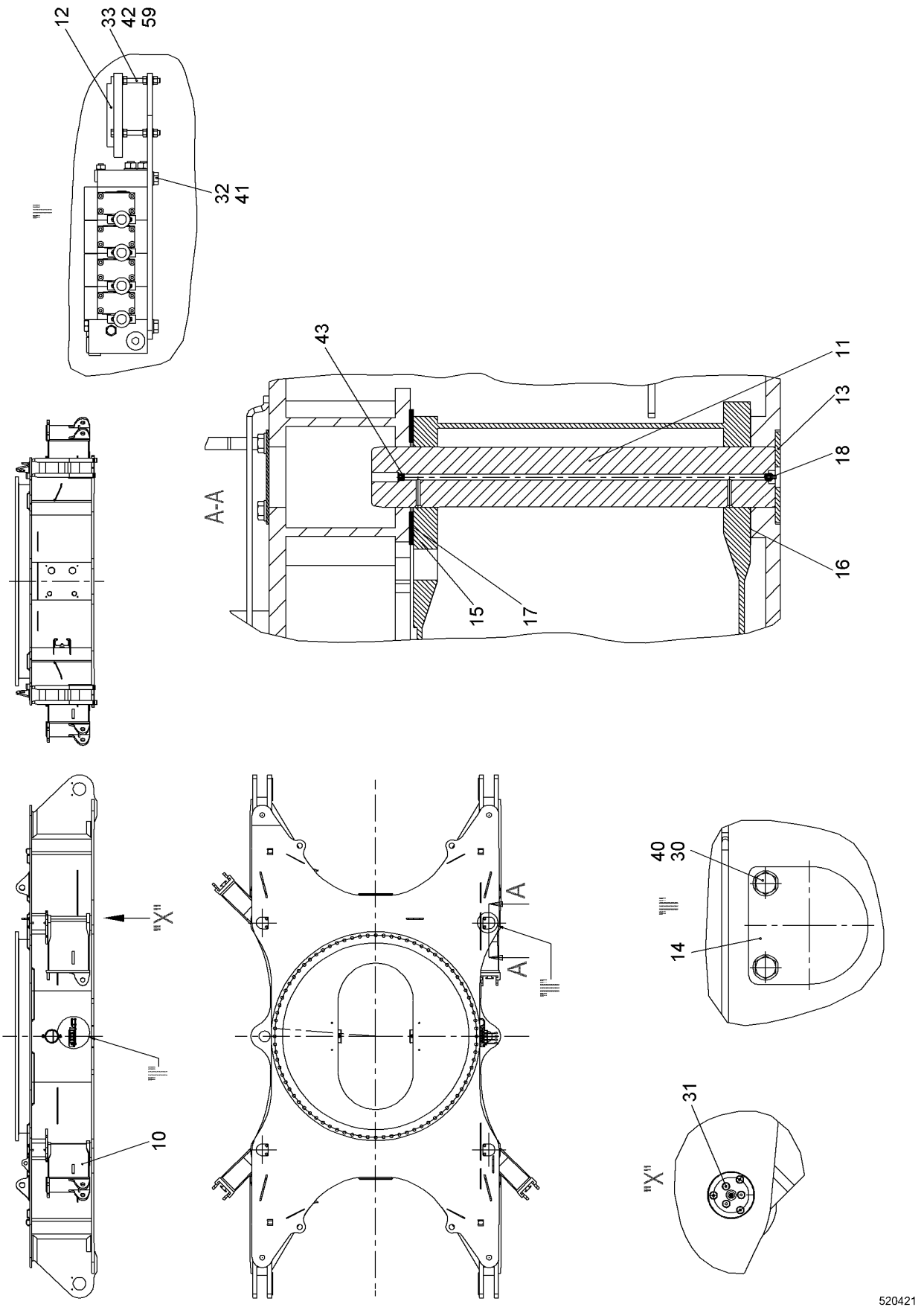
12
33
42
59
32
41
43
11
13
18
16
A-A
15
17
"X"
10
A
A
40
30
14
31
"X"
520421

Pos.	Item	Quantity	Description	Bezeichnung	Serie	K
10	10564433	4	FOLDING BRACKET	KLAPPKONSOLE		
11	10572058	4	PIN	BOLZEN		
12	714000808	1	SPIRIT LEVEL	WASSERWAAGE		
14	10572054	4	COVER	DECKEL		
15	385255314	4	WASHER 200/103X2 DC01;EN 10130	SCHEIBE		
16	385255414	4	WASHER 200/103X1 DC01;EN 10130	SCHEIBE		
17	385255514	4	WASHER 200/103X4 S235JR;EN 10025-2	SCHEIBE		
18	7743242	4	HYDRAULIC-TYPE LUBRICAT.NIPPLE	KEGELSCHMIERNIPPEL		
30	10539316	8	HEX SCREW ISO 4017 M16X30 10.9	SECHSKANTSCHRAUBE		
31	4001967	24	COUNTERSUNK SCREW DIN 7991 M10X20 8.8	SENKSCHRAUBE		
32	406501514	4	HEX SCREW ISO 4017 M8X16 A4-70	SECHSKANTSCHRAUBE		
33	10567564	3	HEX SCREW ISO 4017 M5X55 A4-70	SECHSKANTSCHRAUBE		
40	10544172	8	WASHER ISO 7089 16	SCHEIBE		
41	420001014	4	WASHER ISO 7089 8 A4	SCHEIBE		
42	420005214	9	WASHER ISO 7089 5 A4	SCHEIBE		
43	403900101	4	SCREW PLUG DIN 906 M10X1 ST	VERSCHLUSSSCHRAUBE		
50	411551114	9	HEX NUT ISO 4032 M5 A4-70	SECHSKANTMUTTER		

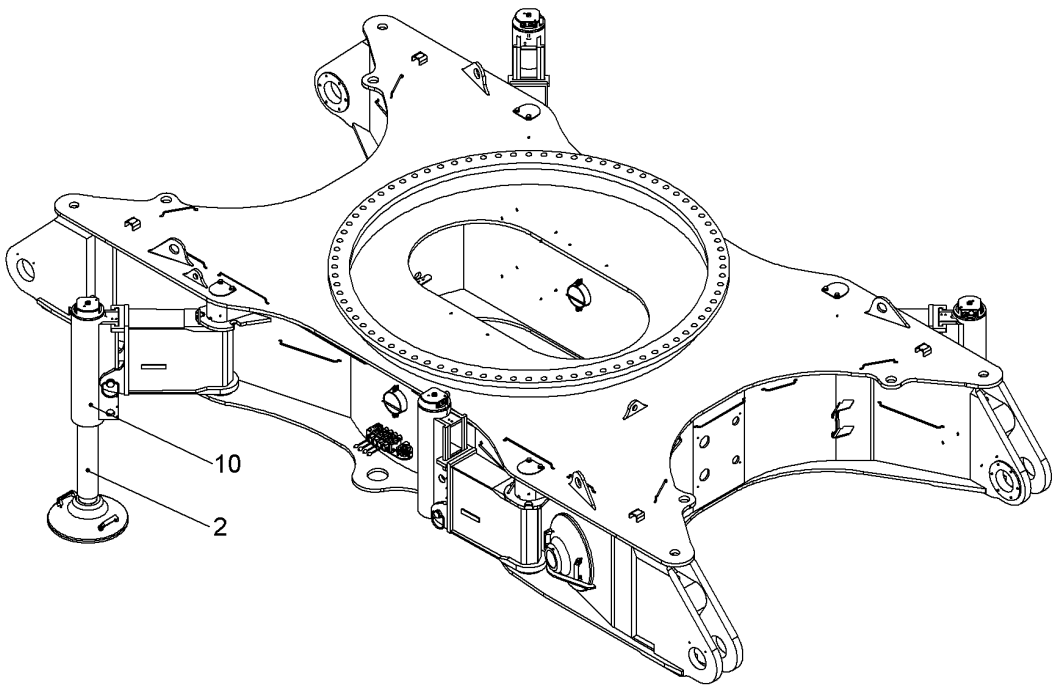

Pos.	Item	Quantity	Description	Bezeichnung	Serie	K
2	11235246	1	JACK-UP SYSTEM HYDR RFK ⇨ ❑ 683	JACK-UP SYSTEM HYDR NRS		
10	11895688	1	SELF-LOADING SYSTEM RFK ⇨ ❑ 687	SELBSTVERLADESYSTEM NRS		

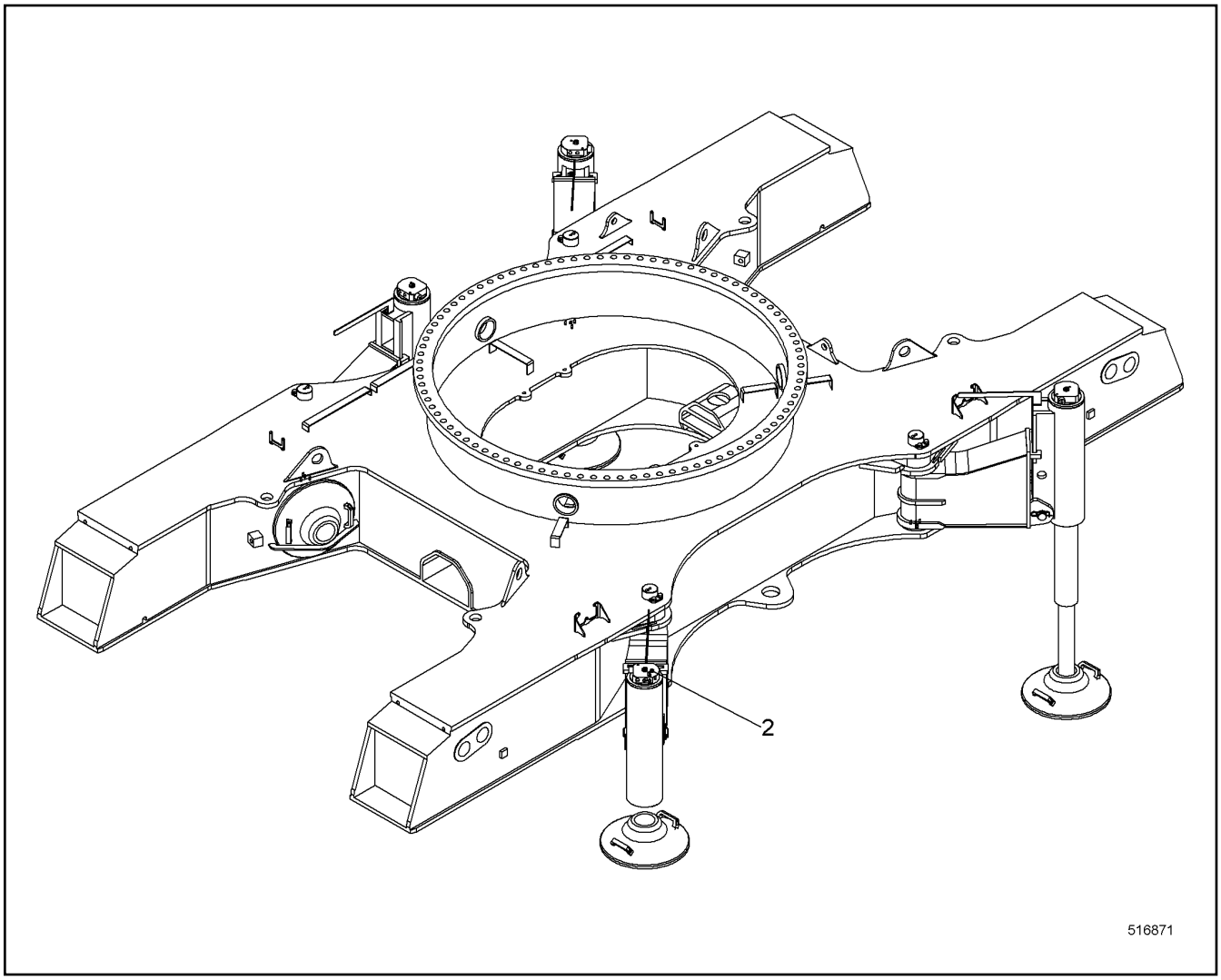

Pos.	Item	Quantity	Description	Bezeichnung	Serie	K
2	11235248	1	TUBING HYDR ⇨ ❑ 684	VERROHRUNG HYDR		

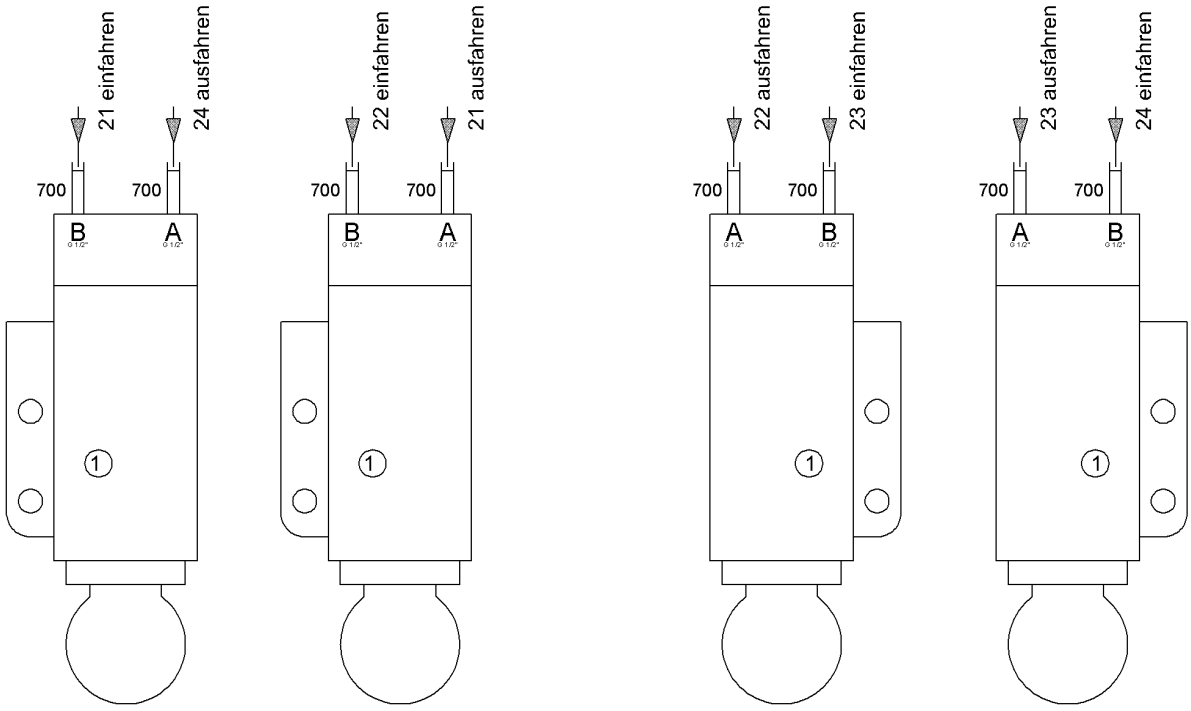

Material: für Montage
material: for assembling

606
605

520364

Pos.	Item	Quantity	Description	Bezeichnung	Serie	K
1	592182614	4	SUPPORT CYLINDER ⇨ ❑ 685	ABSTUETZZYLINDER		
605	477400414	8	FITTING	VERSCHRAUBUNG		
606	477700514	8	FITTING	VERSCHRAUBUNG		
700	471032608	8	FITTING	VERSCHRAUBUNG		

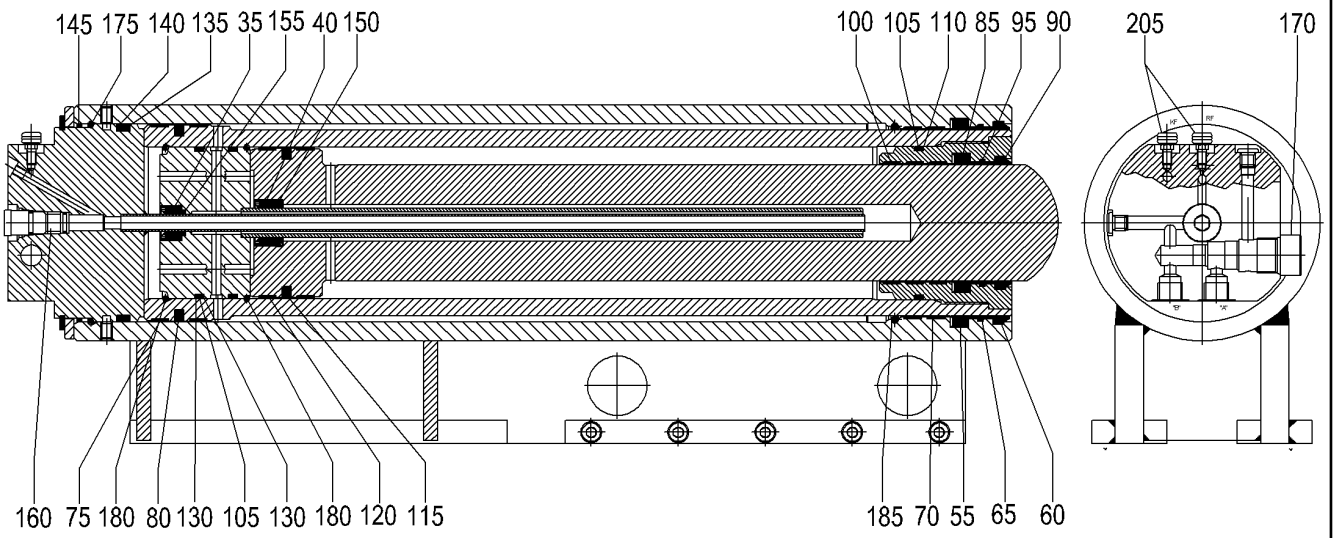

Pos.	Item	Quantity	Description	Bezeichnung	Serie	K
25	11289833	1	FLOOR	BODEN		
35	10352312	1	GUIDE BUSHING M30 X 1.5 X 15.1 X 18	FUEHRUNGSBUCHSE		
40	10352313	1	GUIDE BUSHING M40 X 1.5 X 25.1 X 24	FUEHRUNGSBUCHSE		
55	10352315	1	ROD SEAL	NUTRING		
60	10352319	1	SCRAPER	ABSTREIFER		
65	10352344	1	GUIDE RING	FUEHRUNGSRING		
70	10352349	2	GUIDE RING	FUEHRUNGSRING		
75	10352352	2	GUIDE RING	FUEHRUNGSRING		
80	10352353	1	PISTON PACKING SET	KOLBEN DS		
85	726308514	1	ROD SEAL	NUTRING		
90	749073614	1	SCRAPER	ABSTREIFER		
95	10352354	1	GUIDE RING	FUEHRUNGSRING		
100	726206214	3	GUIDE RING	FUEHRUNGSRING		
105	10352356	3	O-RING	O-RING		
110	10352355	1	BACKING RING	BACKRING		
115	10352357	1	PISTON PACKING SET	KOLBEN DS		
120	10351499	2	GUIDE RING	FUEHRUNGSRING		
130	10352359	4	BACKING RING	BACKRING		
135	10352361	1	O-RING	O-RING		
140	10352368	1	SUPPORTING RING	STUETZRING		
145	10352362	1	O-RING	O-RING		
150	10352364	1	LIFETIME SEAL	GLEITDICHTRING		
155	10352365	1	LIFETIME SEAL	GLEITDICHTRING		
160	11300790	1	LOWERING BRAKE VALVE	SENKBREMSVENTIL		
170	10352371	1	NON-RETURN VALVE	RUECKSCHLAGVENTIL		
175	10352382	1	SNAP RING 5X175	SPRENGRING		

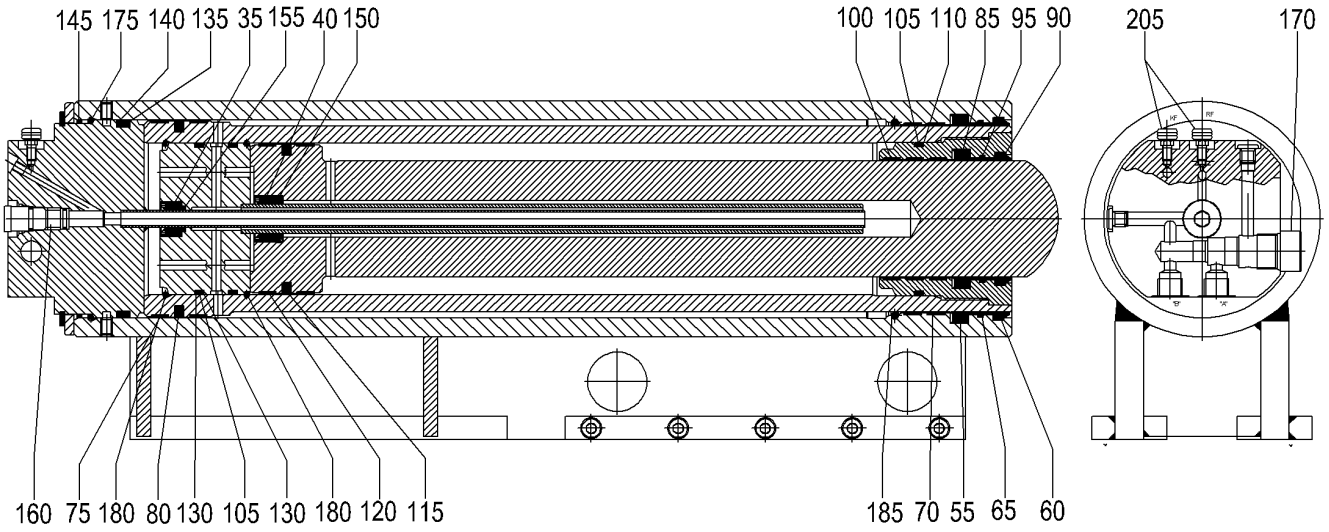

Pos.	Item	Quantity	Description	Bezeichnung	Serie	K
180	10352383	2	SNAP RING 5 X 135	SPRENGRING		
185	10352384	1	SNAP RING 6 X 172	SPRENGRING		
205	10351239	2	VENTILATION VALVE	ENTLUEFTUNGSVENTIL		
900	11904703	1	SEALING SET CPL	DS KPL		

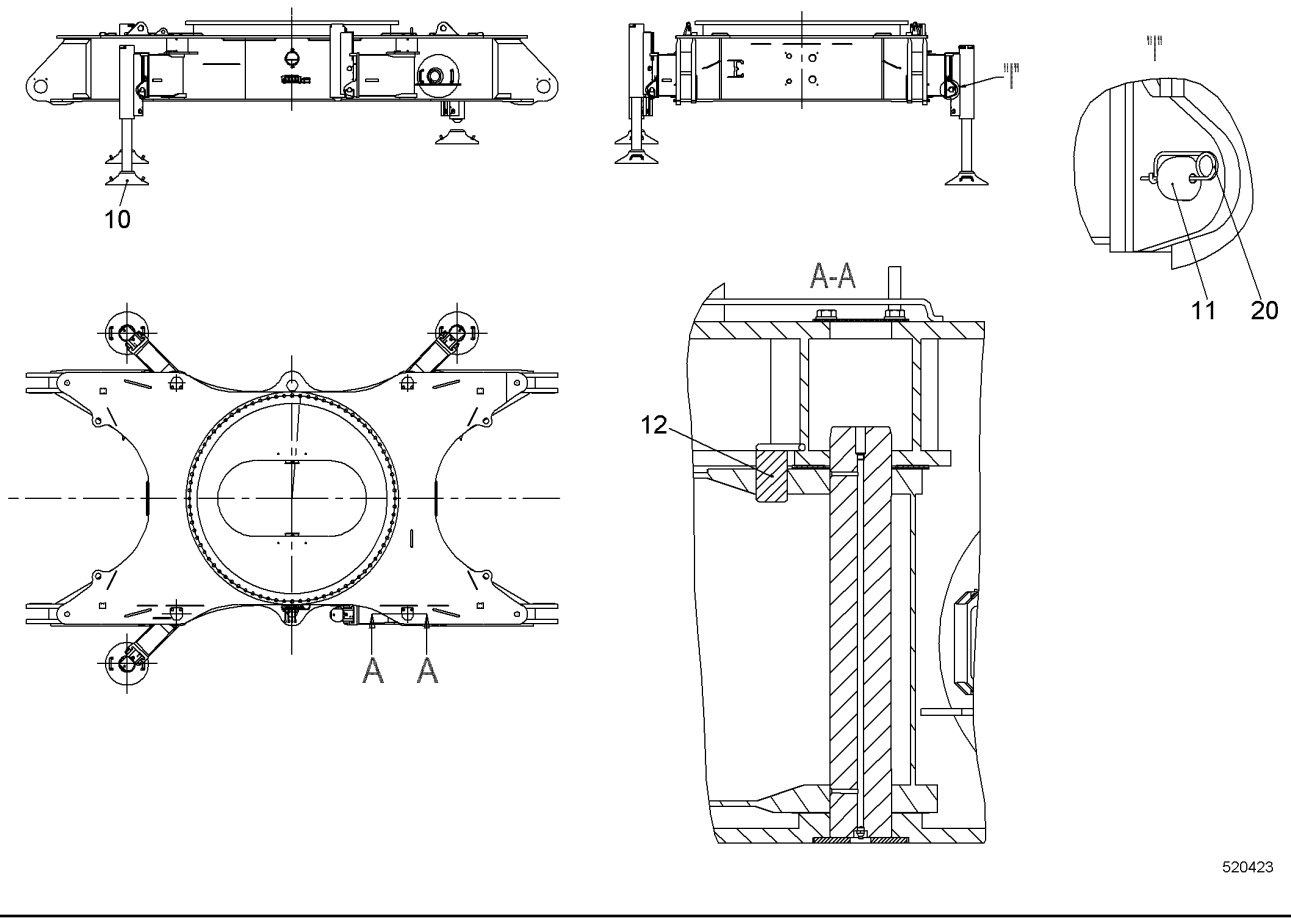

Pos.	Item	Quantity	Description	Bezeichnung	Serie	K
10	990759714	4	SUPPORT PLATE CPL	ABSTUETZPLATTE KPL		
11	11262110	4	PIN CPL	BOLZEN KPL		
12	959835714	4	PIN CPL	BOLZEN KPL		
20	433101208	4	RETAINING SPRING 4MM	SICHERUNGSFEDER		

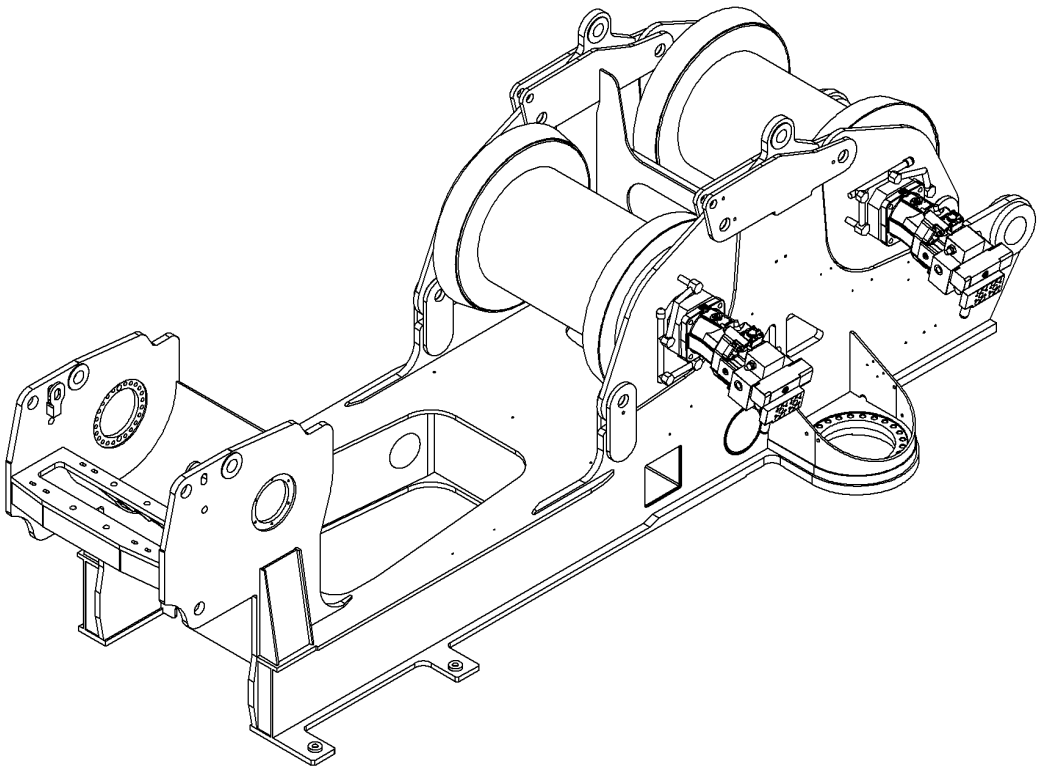

516201

Pos.	Item	Quantity	Description	Bezeichnung	Serie	K
2	10536351	1	SYNCHRONIZING HYDR RFK ⇨ ❑ 689	GLEICHLAUF HYDR NRS		
4	10536352	1	HOSE LIST ⇨ ❑ 691	SCHLAUCHLISTE		

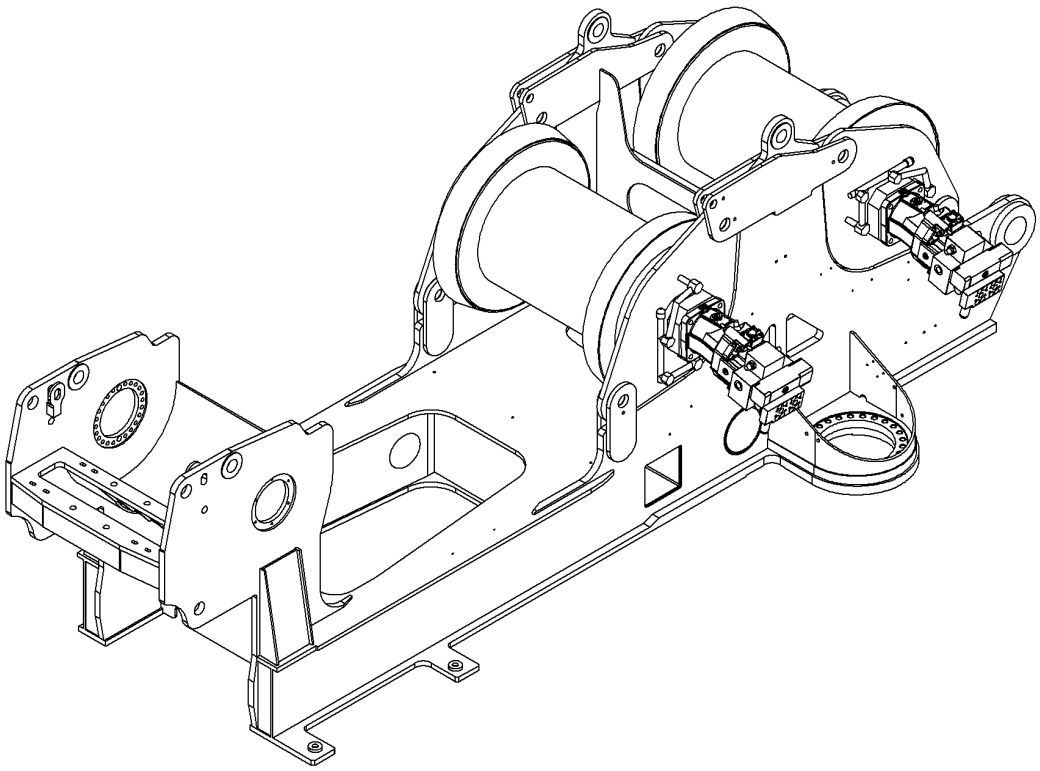

516202

Pos.	Item	Quantity	Description	Bezeichnung	Serie	K
2	10554594	1	TUBING HYDR ⇨ ❑ 690	VERROHRUNG HYDR		

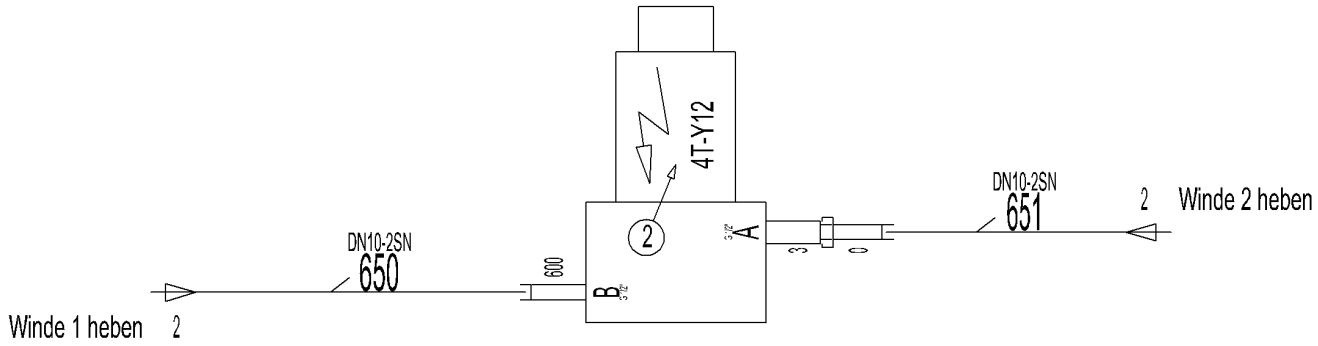

Pos.	Item	Quantity	Description	Bezeichnung	Serie	K
2	511480614	1	DIRECTIONAL CONTROL VALVE	WEGEVENTIL		
3	917906414	1	RESTRICTOR BODY	DROSSELKOERPER		
600	471032608	1	FITTING	VERSCHRAUBUNG		
601	7617354	1	FITTING	VERSCHRAUBUNG		

ACHTUNG !
ATTENTION !
ATTENTION !
ATENCIÓN !
ATENÇÃO !
ВНИМАНИЕ

Für Schlauchbestellungen kann über die Schlauchnummer, in der entsprechenden Schlauchliste, die Identnummer festgestellt werden.

For ordering flexible hoses you can find the identification number through the hose-number in the corresponding hose-list.

Pour des ordres de tuyau flexible le nombre d'identification on voit dans la liste de tuyau flexible correspondente.

Para el pedido de manguera, indicar el número de identificación de la manguera de la lista respectiva.

Para se encomendar uma mangueira, consulte o número de identificaçao na respectiva lista de mangueiras.

Для оформления заказов на шланги/рукавы идент. № может быть определен при помощи номера шланга/рукава, указанного в соотетствующем перечне шлангов/рукавов.

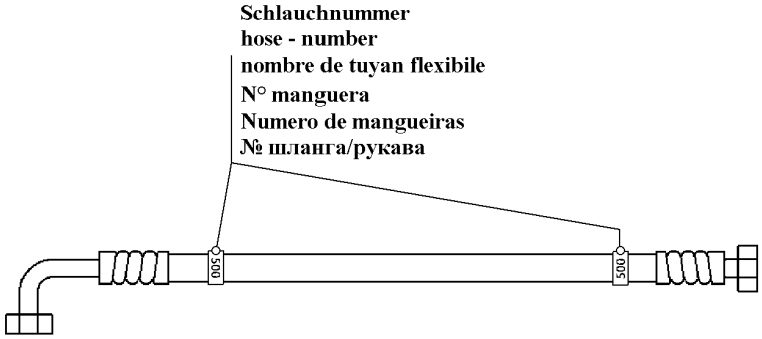

500000

Pos.	Item	Quantity	Description	Bezeichnung	Serie	K
1	10518558	2	ADHESIVE LABEL	HAFTETIKETTE		
650	993227714	1	HOSE CPL	SCHLAUCH KPL		
651	993759614	1	HOSE CPL	SCHLAUCH KPL		

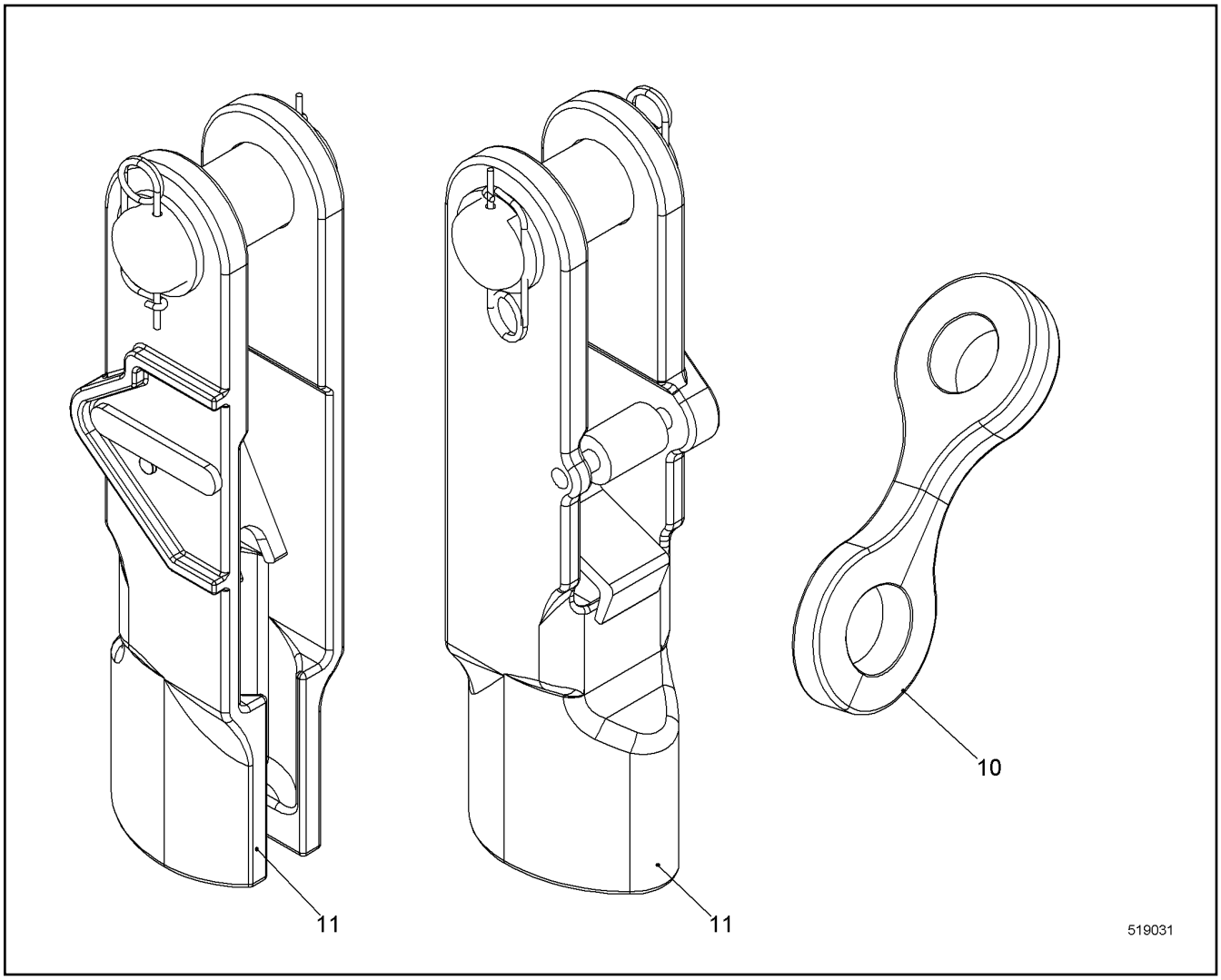

Pos.	Item	Quantity	Description	Bezeichnung	Serie	K
10	956507814	1	CROSS STRAP	KREUZLASCHE		
11	11236233	1	POUCH SOCKET ⇨ ❑ 693	TASCHENSCHLOSS		

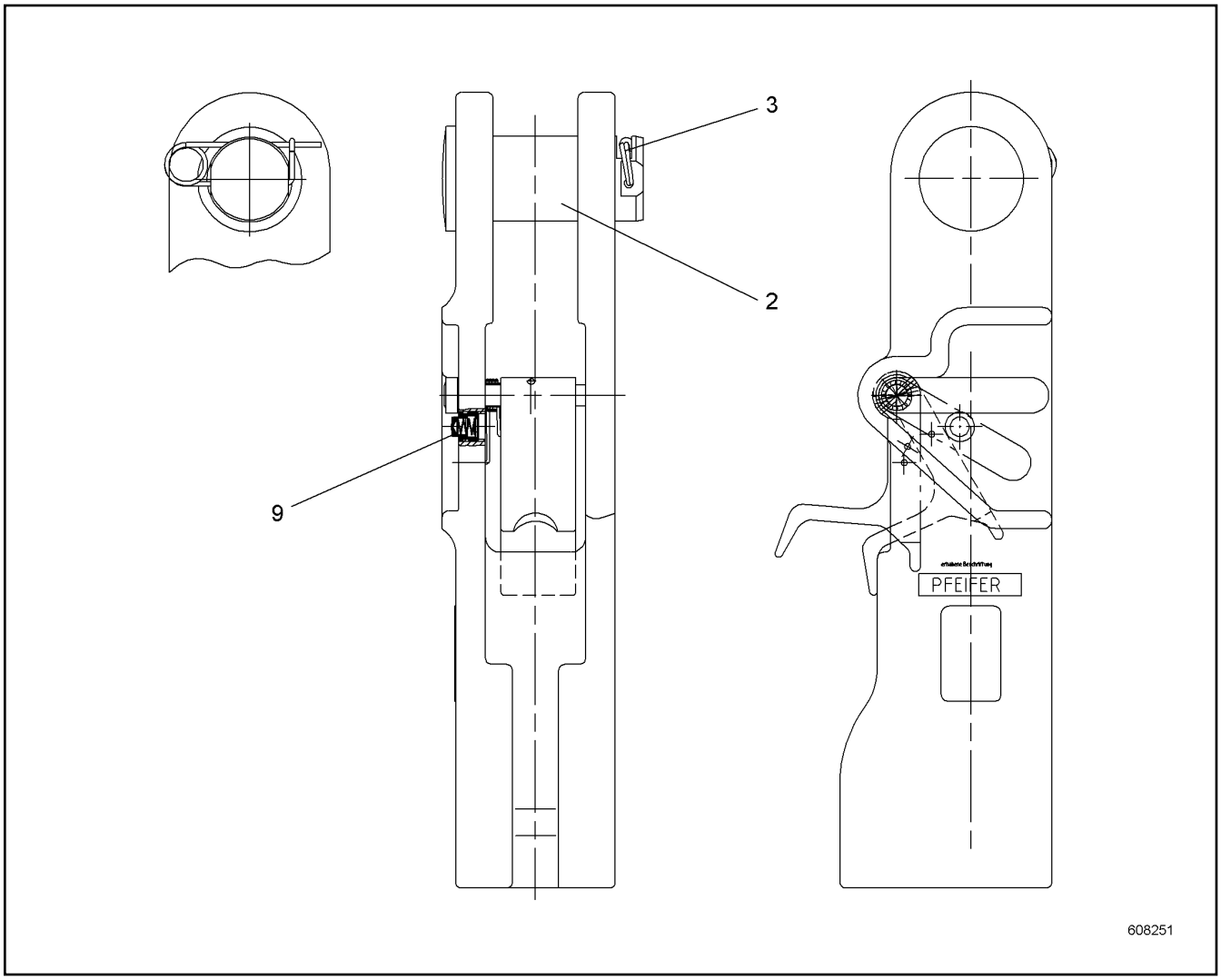

Pos.	Item	Quantity	Description	Bezeichnung	Serie	K
2	11297460	1	COLLER BOLT	BUNDBOLZEN		
3	11297461	1	RETAINING SPRING 3MM	SICHERUNGSFEDER		
6	11306379	1	SPIRAL DOWEL PIN DIN 7344 5.0X26	SPIRALSPANNSTIFT		
9	10504994	1	BUTTON	KNOPF		

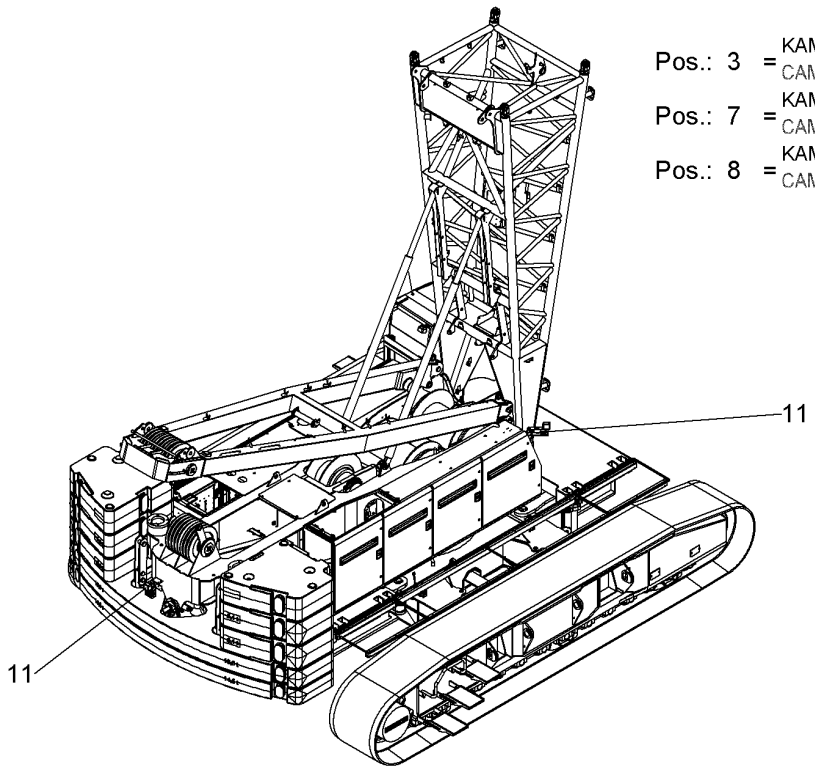

Pos.: 3 = KAMERAUEBERWACHUNG
CAMERA MONITORING

Pos.: 7 = KAMERAUEBERWACHUNG
CAMERA MONITORING

Pos.: 8 = KAMERAUEBERWACHUNG
CAMERA MONITORING

520294

Pos.	Item	Quantity	Description	Bezeichnung	Serie	K
3	11893352	1	CAMERA MONITORING	KAMERAUEBERWACHUNG		
7	10532461	1	CAMERA MONITORING ⇨ ❑ 695	KAMERAUEBERWACHUNG		
8	10507750	1	CAMERA MONITORING ⇨ ❑ 697	KAMERAUEBERWACHUNG		
11	10580647	1	VIDEO MONITORING SYSTEM RFK ⇨ ❑ 698	VIDEOUEBERWACHUNGSANLAG		

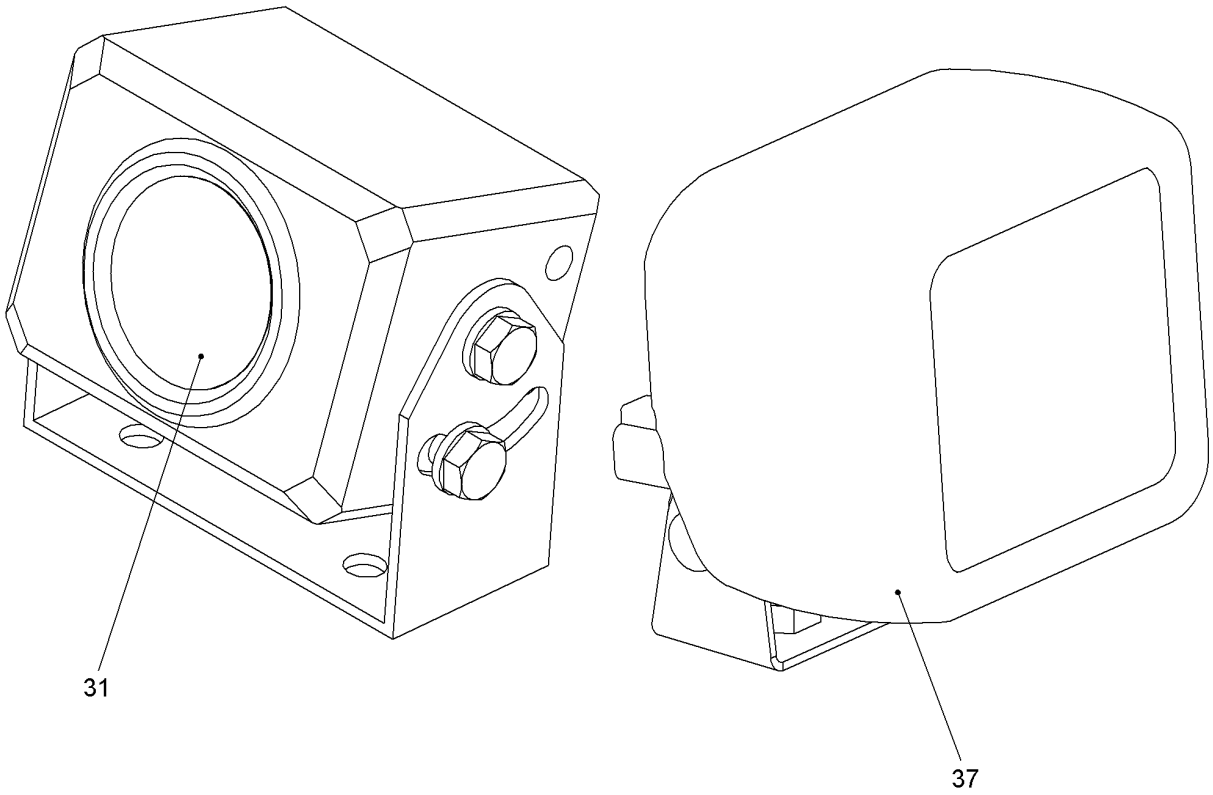

Pos.	Item	Quantity	Description	Bezeichnung	Serie	K
31	10024012	1	CAMERA CCD	KAMERA CCD		
37	7027205	1	WORK LIGHT ⇨ ❑ 48	ARBEITSSCHEINWERFER		
50	10533524	1	CABIN EL ⇨ ❑ 696	KABINE EL		

OHNE BILD
WITHOUT ILLUSTRATION
SANS PLANCHE
SIN FIG.
SEM ILUSTRAÇÃO
БЕЗ ИЗОБРАЖЕНИЯ

600000

Pos.	Item	Quantity	Description	Bezeichnung	Serie	K
1	11240503	1	MONITOR LCD	MONITOR LCD		
3	11240499	1	CABLE	KABEL		
4	10286648	1	BALL JOINT	KUGELGELENK		

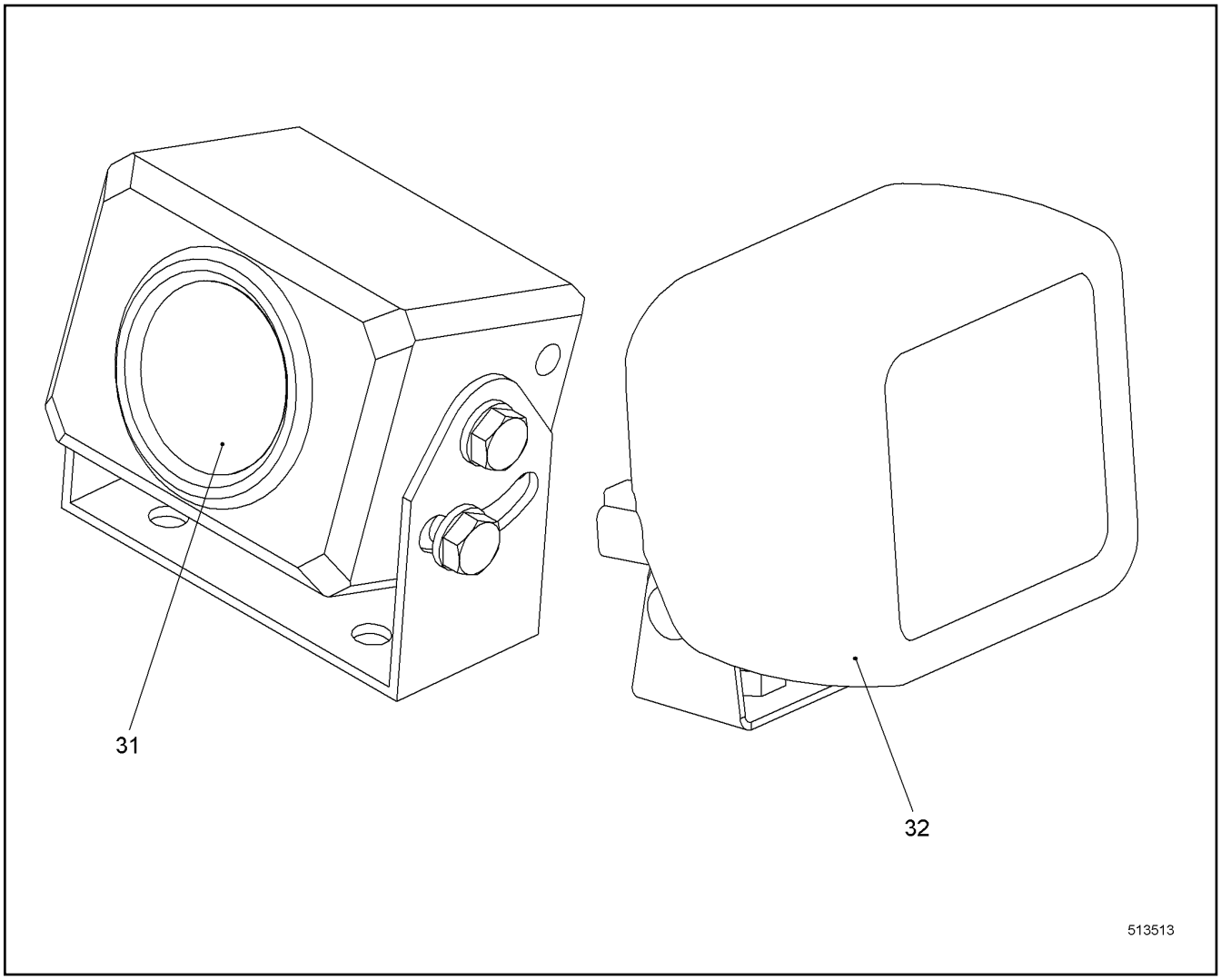

Pos.	Item	Quantity	Description	Bezeichnung	Serie	K
31	10024012	1	CAMERA CCD	KAMERA CCD		
32	7027205	1	WORK LIGHT ⇨ ❑ 48	ARBEITSSCHEINWERFER		

LIEBHERR

138376_ETK_001

VIDEO MONITORING SYSTEM RFK
VIDEOUEBERWACHUNGSANLAGE NRS

10 58 064 7

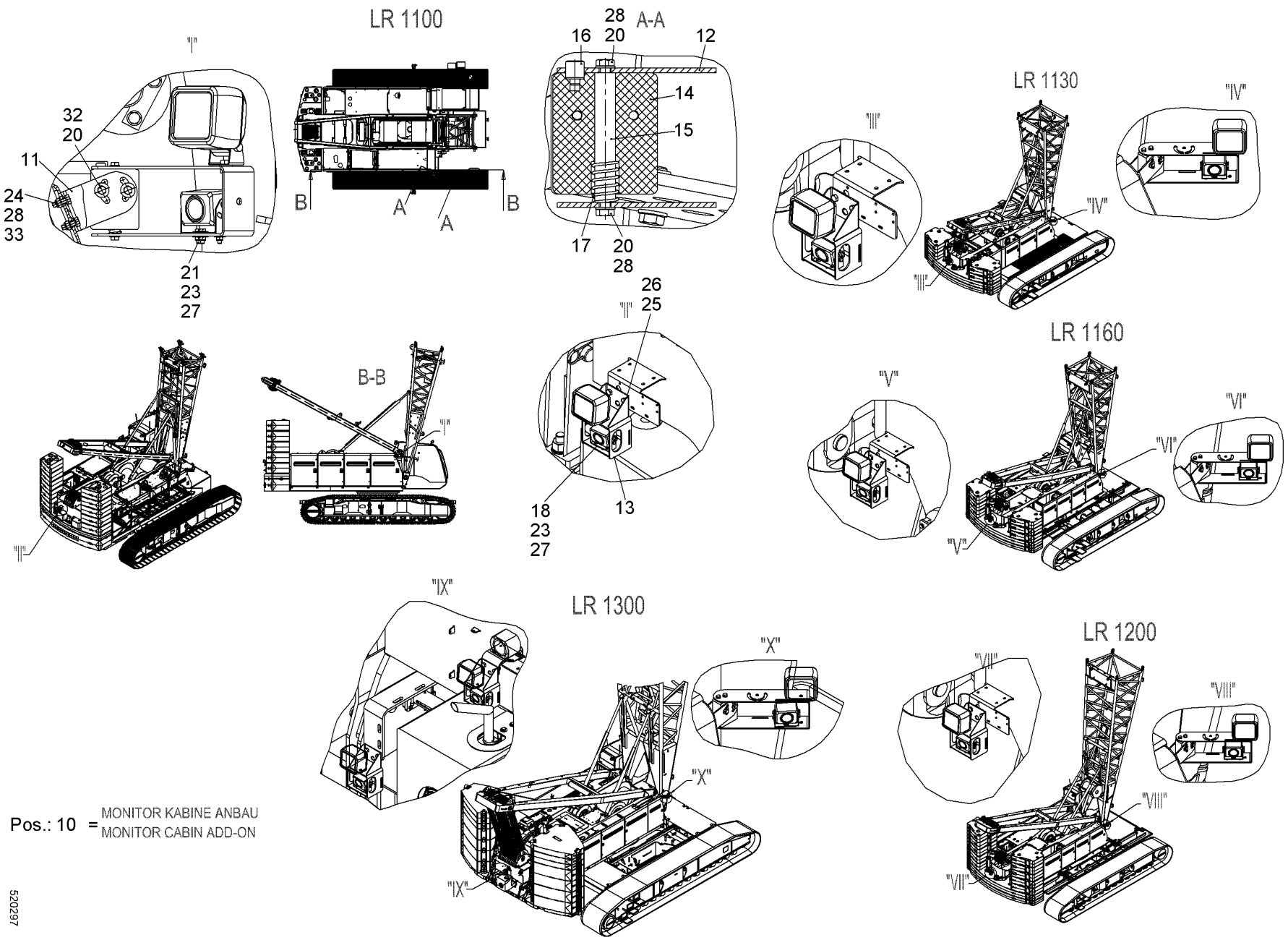

Pos.: 10 = MONITOR KABINE ANBAU
MONITOR CABIN ADD-ON

520297

Pos.	Item	Quantity	Description	Bezeichnung	Serie	K
10	10578486	1	MONITOR CABIN ADD-ON ⇨ ❑ 700	MONITOR KABINE ANBAU		
11	10529071	1	PLATE	BLECH		
12	10529074	1	PLATE	BLECH		
13	385137114	1	HOLDER CAMERA	HALTER KAMERA		
14	10529080	1	TWIST PIVOT	DREHGELENK		
15	10529084	1	PIN	BOLZEN		
16	10529086	1	PIN	BOLZEN		
17	10529089	1	PRESSURE SPRING	DRUCKFEDER		
18	406501714	3	HEX SCREW ISO 4017 M6X16 A4-70	SECHSKANTSCHRAUBE		
20	406518814	6	HEX SCREW ISO 4017 M8X20 A4-70	SECHSKANTSCHRAUBE		
21	406532614	3	HEX SCREW ISO 4017 M6X20 A4-70	SECHSKANTSCHRAUBE		
23	10540492	6	HEX NUT ISO 10511 M6 A4	SECHSKANTMUTTER		
24	10540493	2	HEX NUT ISO 10511 M8 A4	SECHSKANTMUTTER		
25	4901782	2	WASHER ISO 7089 12 A4	SCHEIBE		
26	10540495	2	HEX NUT ISO 10511 M12 A4	SECHSKANTMUTTER		
27	10540500	9	WASHER ISO 7093-1 6 A4	SCHEIBE		
28	420001014	6	WASHER ISO 7089 8 A4	SCHEIBE		
32	10540510	4	WASHER ISO 7093-1 8 A4	SCHEIBE		
33	406501414	2	HEX SCREW ISO 4017 M8X25 A4-70	SECHSKANTSCHRAUBE		

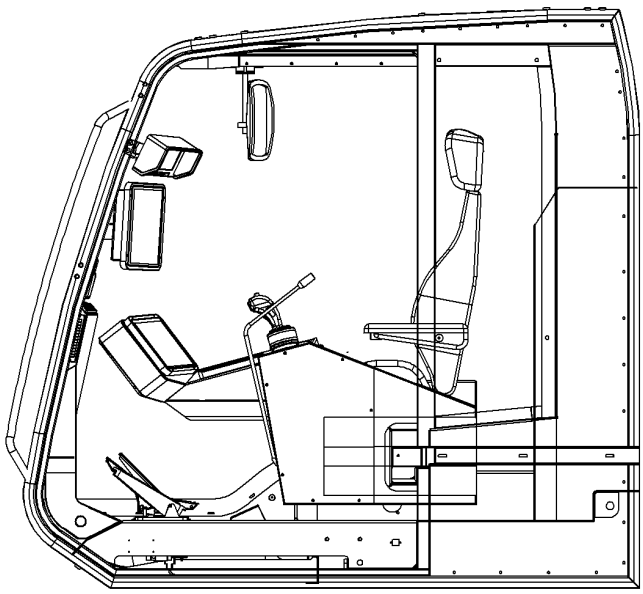

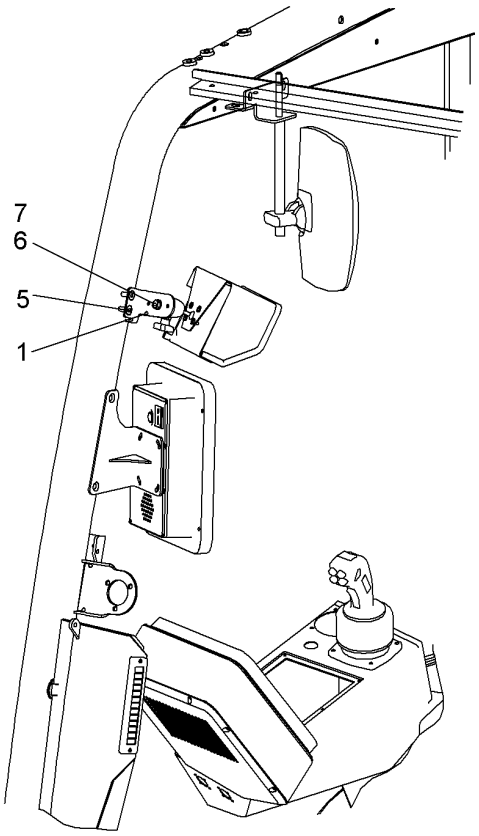

515129

Pos.	Item	Quantity	Description	Bezeichnung	Serie	K
1	10527391	1	HOLDER	HALTER		
5	408606214	2	COUNTERSUNK SCREW DIN 7991 M8X20 A4-7	SENKSCHRAUBE		
6	406501514	1	HEX SCREW ISO 4017 M8X16 A4-70	SECHSKANTSCHRAUBE		
7	420001014	1	WASHER ISO 7089 8 A4	SCHEIBE		

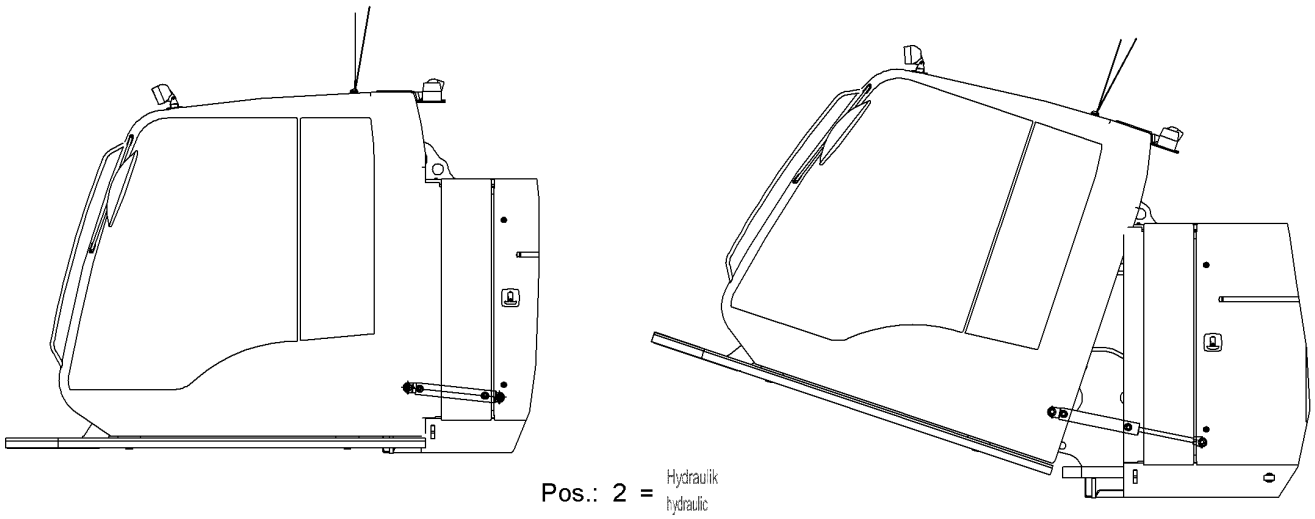

Pos.	Item	Quantity	Description	Bezeichnung	Serie	K
2	10517281	1	TUBING HYDR ⇨ ❑ 702	VERROHRUNG HYDR		
3	10531224	1	CABIN INCLINATION EL RFK	KABINENNEIGUNG EL NRS		
10		-1	TURNBUCKLE	SPANNSCHLOSS		

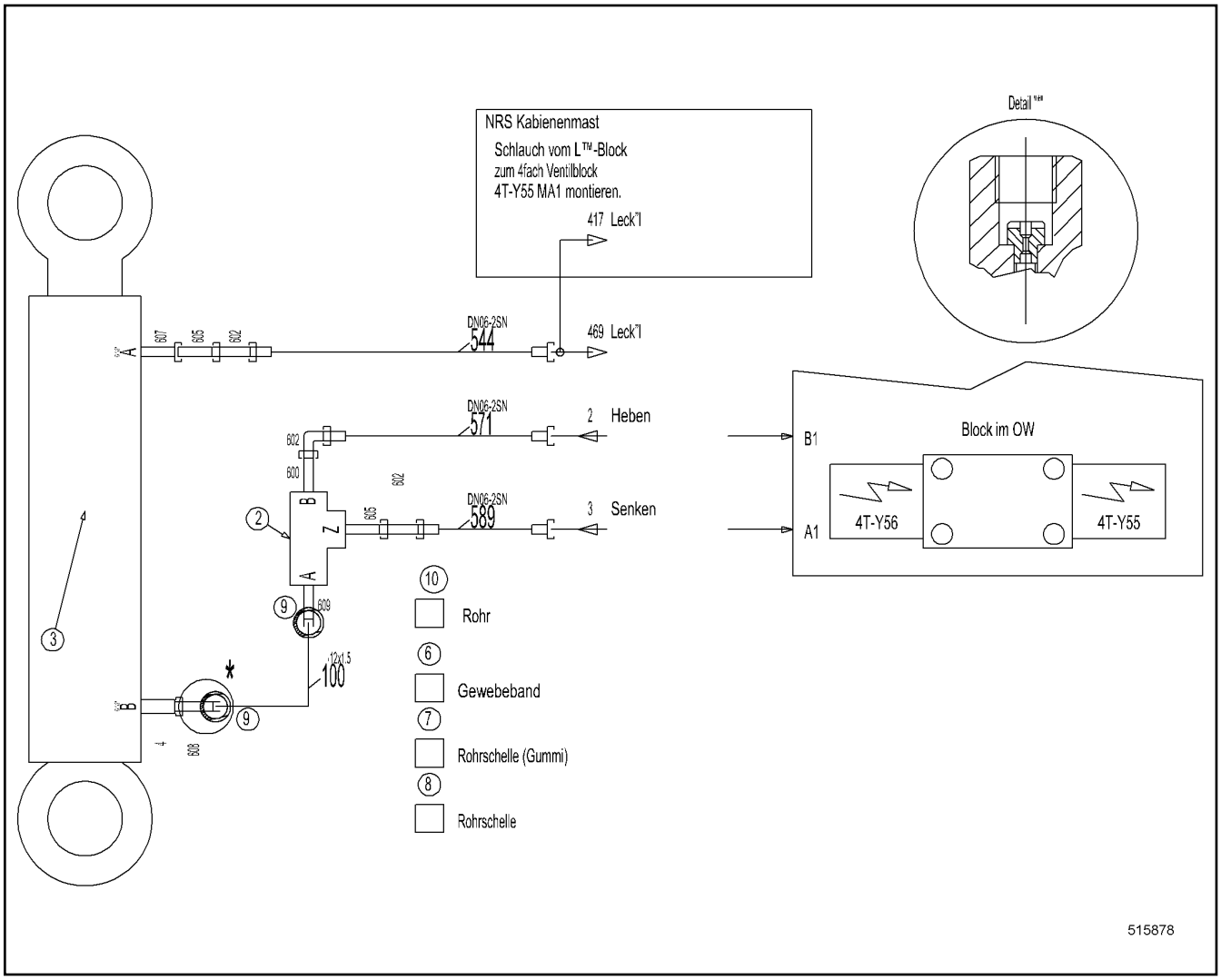

Pos.	Item	Quantity	Description	Bezeichnung	Serie	K
2	510466114	1	PILOT CONTROLLED CHECK VALVE	RUECKSCHLAGVENTIL ENTSPE		
3	592000814	1	DOUBLE-ACTING CYL ⇨ ❑ 703	DOPPELWIRKZYL		
4	917906414	1	RESTRICTOR BODY	DROSSELKOERPER		
5	714001914	1	MAIN JET SOLEX 0.8MM	HAUPTDUESE SOLEX		
7	10579877	1	PIPE CLAMP	ROHRSCHELLE		
8	774214308	1	HOSE CLAMP	SCHLAUCHSCHELLE		
9	790230014	2	SEAL	DICHTUNG		
10	10588224	1	PIPE SET	ROHRSATZ		
600	471032808	1	FITTING	VERSCHRAUBUNG		
602	7617268	3	FITTING	VERSCHRAUBUNG		
605	471004514	2	FITTING	VERSCHRAUBUNG		
607	247042402	1	FITTING	VERSCHRAUBUNG		
608	7617354	1	FITTING	VERSCHRAUBUNG		
609	471032708	1	FITTING	VERSCHRAUBUNG		

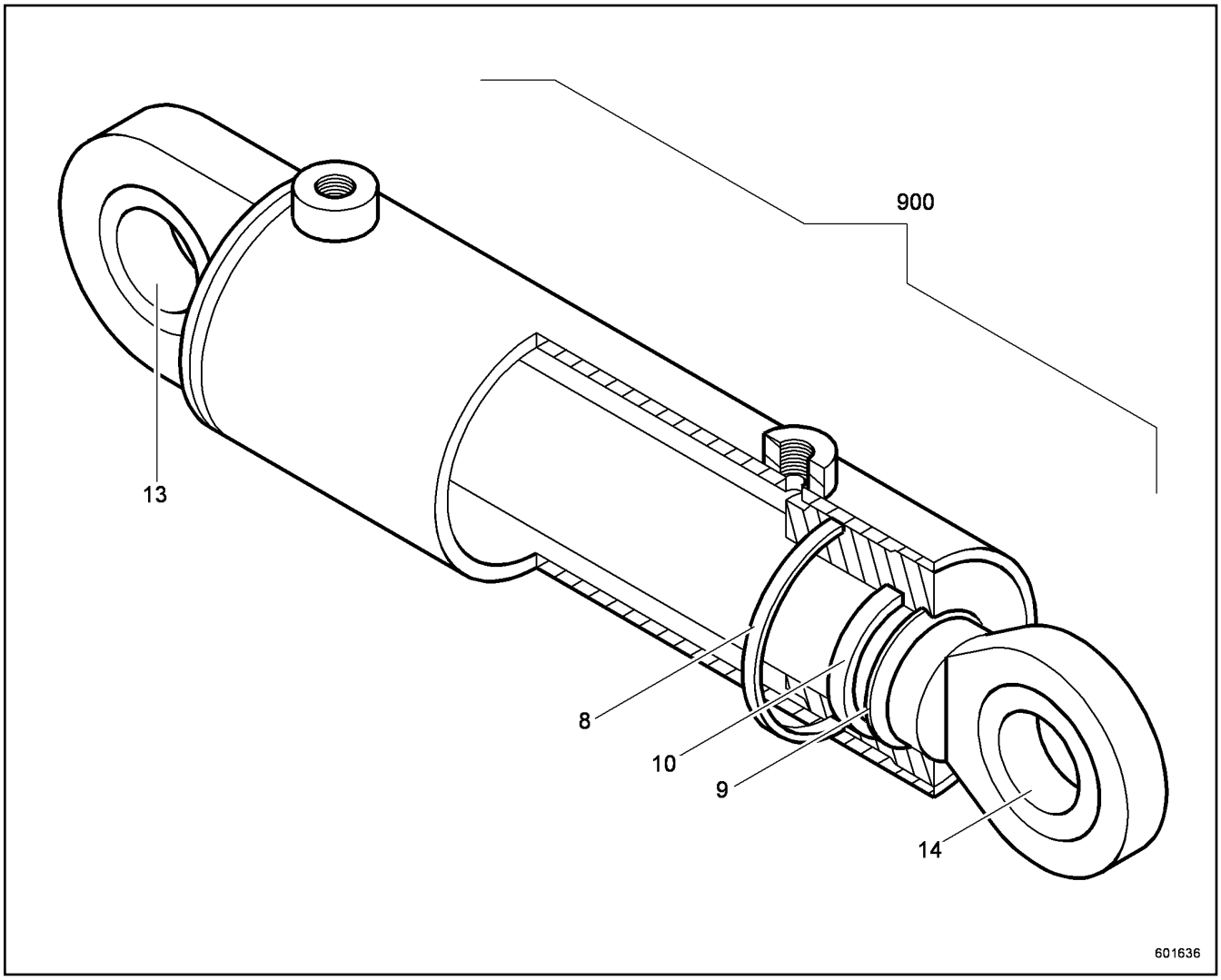

Pos.	Item	Quantity	Description	Bezeichnung	Serie	K
8	726456914	1	O-RING	O-RING		
9	592031814	1	SCRAPER	ABSTREIFER		
10	726306414	1	ROD SEAL	NUTRING		
13	746925314	1	SPHERICAL BEARING	GELENKLAGER		
14	746925314	1	SPHERICAL BEARING	GELENKLAGER		
900	790230614	1	SEALING SET CPL CYL	DS KPL ZYL		

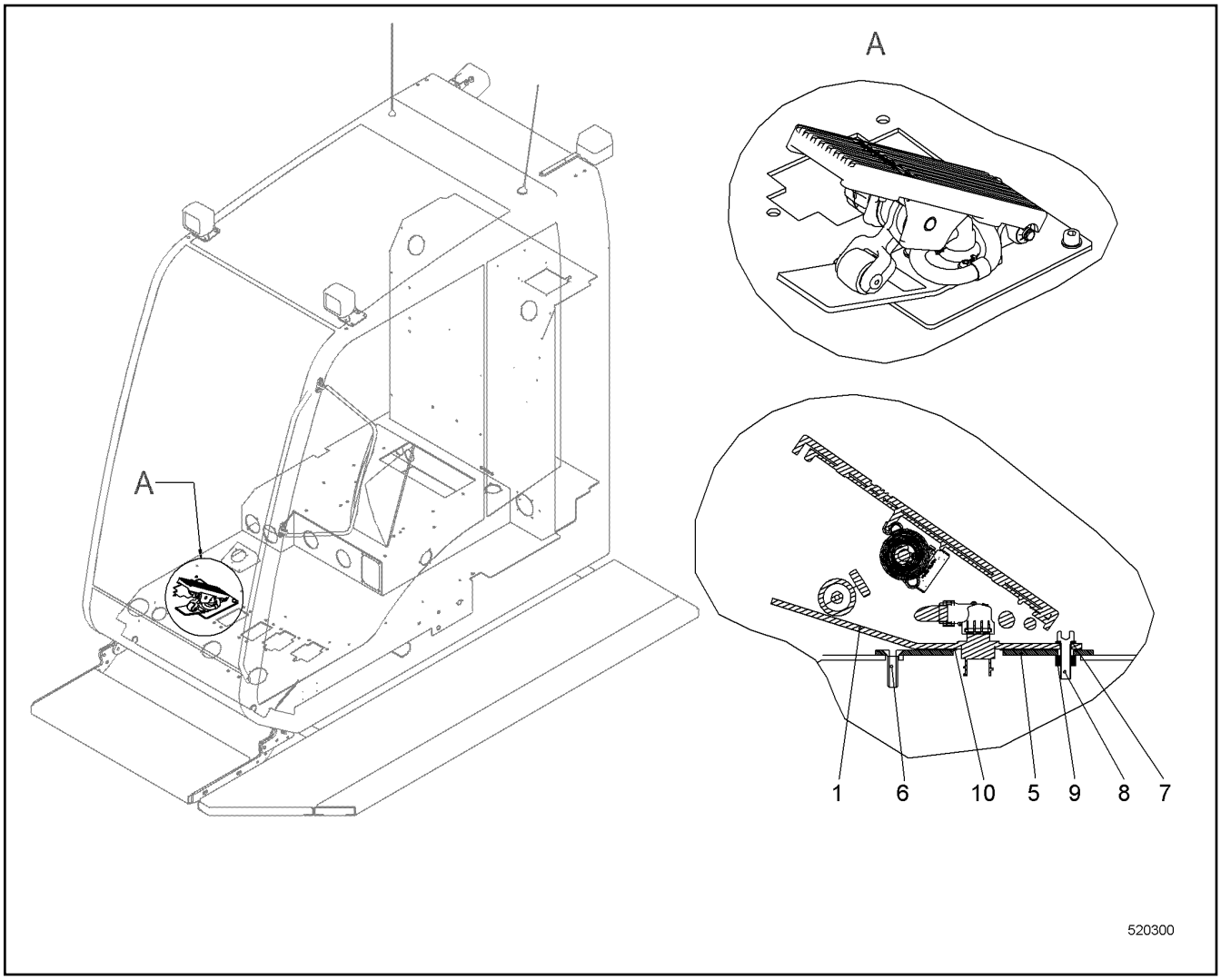

Pos.	Item	Quantity	Description	Bezeichnung	Serie	K
1	11219883	1	FOOT PEDAL	FUSSPEDAL		
5	11220468	1	ADAPTER PLATE	ADAPTERBLECH		
6	408600708	1	COUNTERSUNK SCREW ISO 10642 M8X30 8.8	SENKSCHRAUBE		
7	420001014	4	WASHER ISO 7089 8 A4	SCHEIBE		
8	404206614	4	SOCKET HEAD SCREW ISO 4762 M8X30 A4-7	ZYLINDERSCHRAUBE		
9	413003208	2	CAGE NUT M8-R-123-47 ST	KAEFIGMUTTER		
10	11220477	1	RING	RING		

OHNE BILD
WITHOUT ILLUSTRATION
SANS PLANCHE
SIN FIG.
SEM ILUSTRAÇÃO
БЕЗ ИЗОБРАЖЕНИЯ

600000

Pos.	Item	Quantity	Description	Bezeichnung	Serie	K
11	11217500	1	LIQUEFIER ⇨ ❑ 706	VERFLUESSIGER		
12	10565368	1	SOLENOIDVALVE BUILT-IN KIT RFK ⇨ ❑ 708	MAGNETVENTIL EINBAUSATZ NR		
15	553078814	2.2	COOLANT	KUEHLMITTEL		
17	959465714	1	BRACKET	BUEGEL		
18	11892804	1	INSULATION	ISOLIERUNG		
20	10577909	1	HOSE LIST ⇨ ❑ 710	SCHLAUCHLISTE		
22	11232788	1	SIGN	SCHILD		

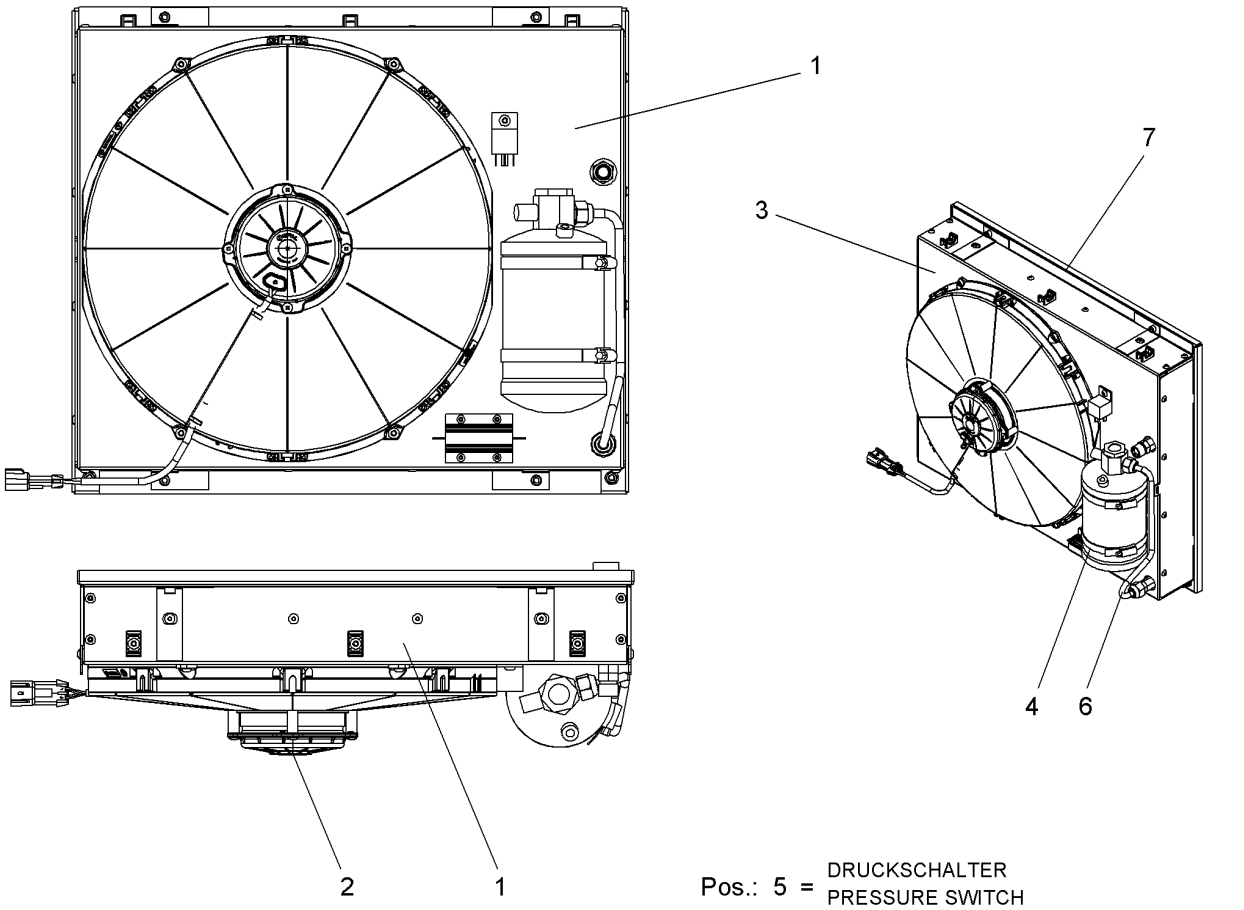

Pos.	Item	Quantity	Description	Bezeichnung	Serie	K
1	11236707	1	HEAT EXCHANGER	WAERMETAUSCHER		
2	11236708	1	FAN MOTOR	LUEFTERMOTOR		
3	11236709	1	COVER	ABDECKUNG		
4	11236711	1	DRYER	TROCKNER		
5	11236712	1	PRESSURE SWITCH	DRUCKSCHALTER		
6	11236713	1	LEAD	LEITUNG		
7	11236714	1	FRAME	RAHMEN		
			⇨ ❑ 707			

OHNE BILD
WITHOUT ILLUSTRATION
SANS PLANCHE
SIN FIG.
SEM ILUSTRAÇÃO
БЕЗ ИЗОБРАЖЕНИЯ

600000

Pos.	Item	Quantity	Description	Bezeichnung	Serie	K
1	11903519	4	RUBBER BUFFER	GUMMIPUFFER		

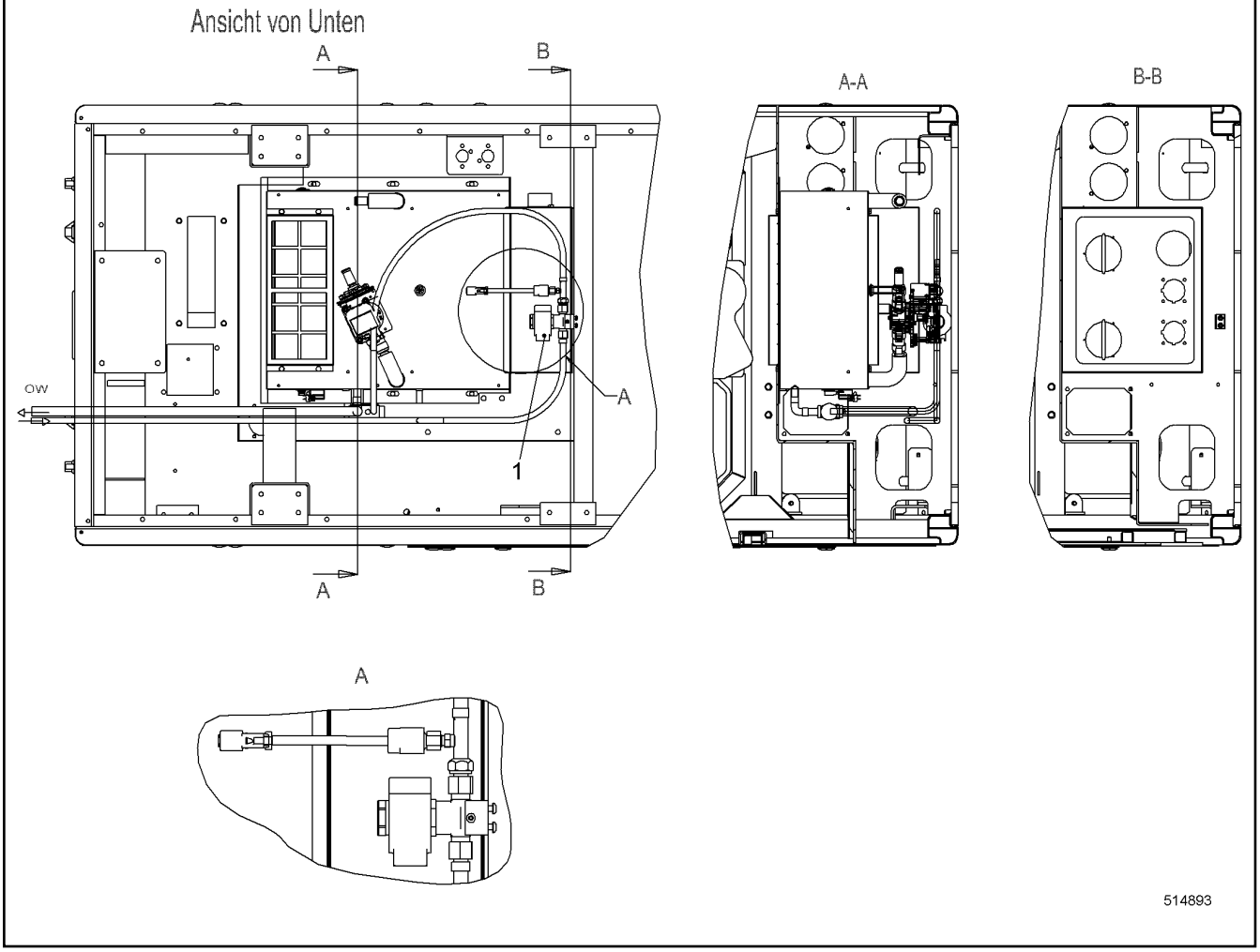

Pos.	Item	Quantity	Description	Bezeichnung	Serie	K
1	10565367	1	SOLENOID VALVE BUILT-IN KIT ⇨ ❑ 709	MAGNETVENTIL EINBAUSATZ		

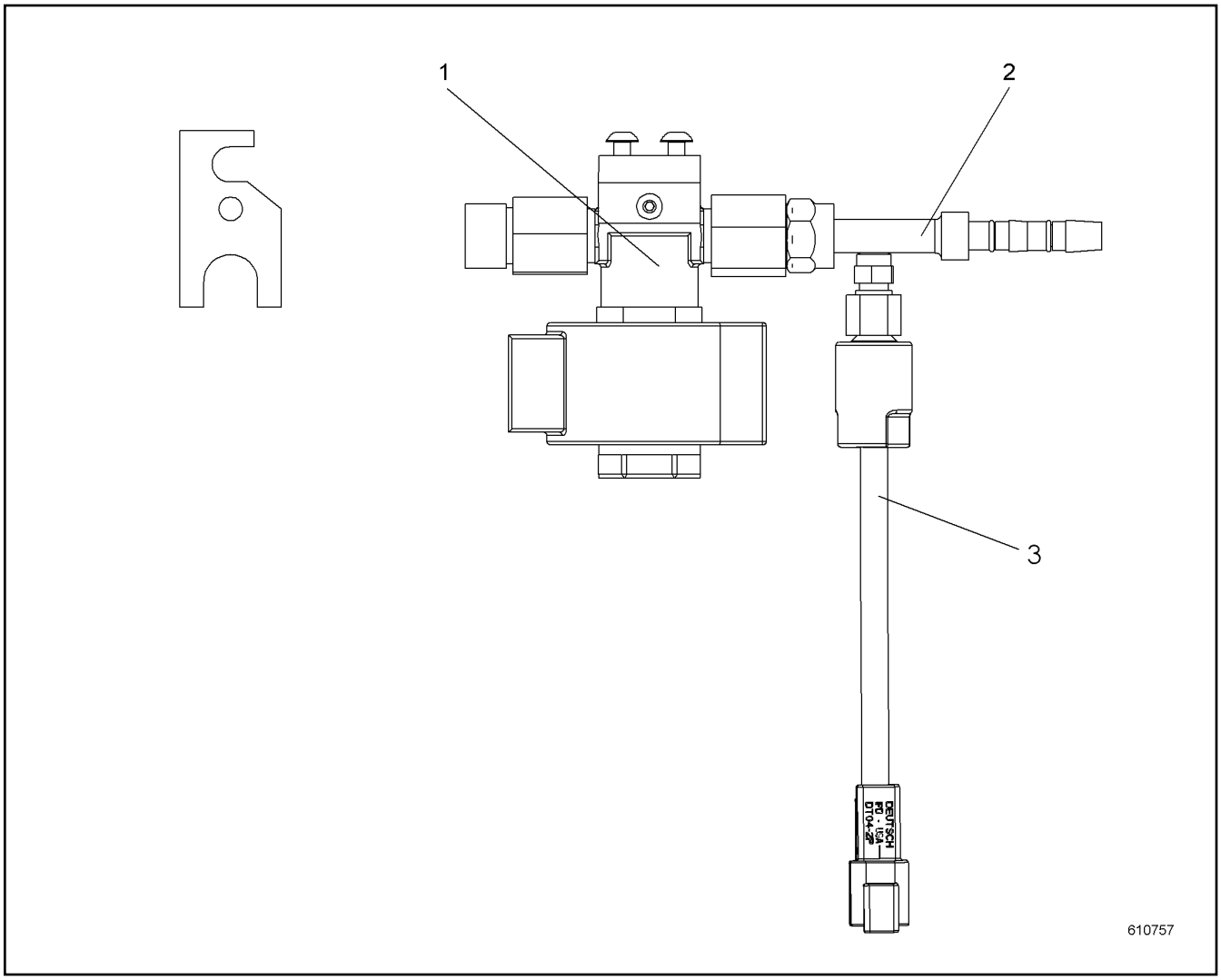

Pos.	Item	Quantity	Description	Bezeichnung	Serie	K
1	11254299	1	SOLENOID VALVE	MAGNETVENTIL		
2	11953398	1	HOSE FITTING	SCHLAUCHARMATUR		
3	11903869	1	PRESSURE SWITCH	DRUCKSCHALTER		

ACHTUNG !
ATTENTION !
ATTENTION !
ATENCIÓN !
ATENÇÃO !
ВНИМАНИЕ

Für Schlauchbestellungen kann über die Schlauchnummer, in der entsprechenden Schlauchliste, die Identnummer festgestellt werden.

For ordering flexible hoses you can find the identification number through the hose-number in the corresponding hose-list.

Pour des ordres de tuyau flexible le nombre d'identification on voit dans la liste de tuyau flexible correspondente.

Para el pedido de manguera, indicar el número de identificación de la manguera de la lista respectiva.

Para se encomendar uma mangueira, consulte o número de identificaçao na respectiva lista de mangueiras.

Для оформления заказов на шланги/рукавы идент. № может быть определен при помощи номера шланга/рукава, указанного в соотетствующем перечне шлангов/рукавов.

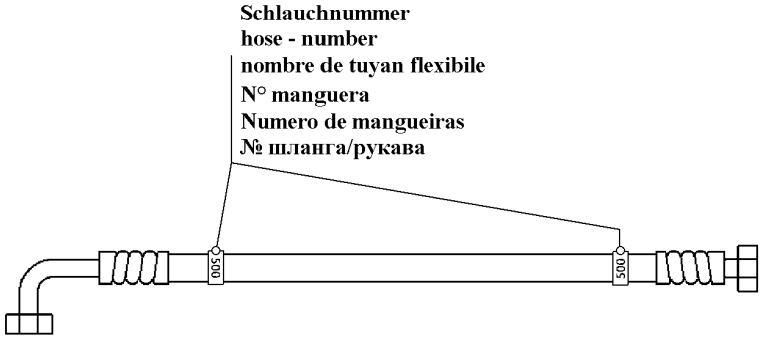

500000

Pos.	Item	Quantity	Description	Bezeichnung	Serie	K
4	10527918	1	HOSE SET CPL	SCHLAUCHSATZ KPL		

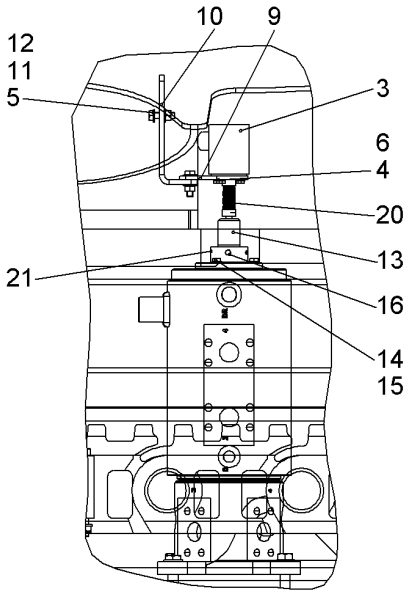

LR1100/HS8100

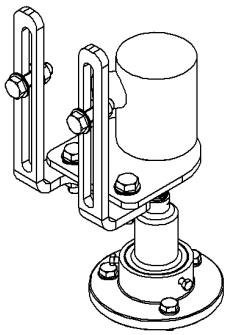

LR1300

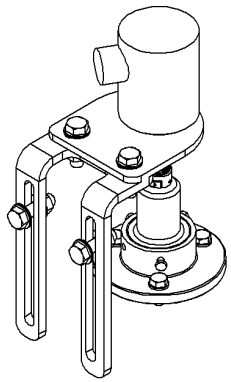

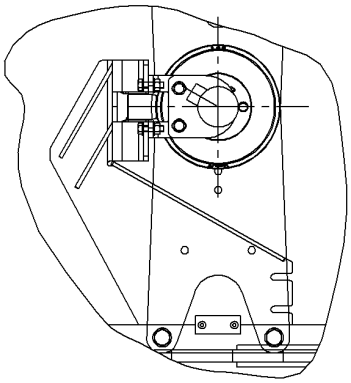

520780

Pos.	Item	Quantity	Description	Bezeichnung	Serie	K
3	10529522	1	SG TACHOGENERATOR RFK ⇨ ❑ 712	DW GEBER NRS		
4	406532614	4	HEX SCREW ISO 4017 M6X20 A4-70	SECHSKANTSCHRAUBE		
5	411514614	4	HEX NUT ISO 4032 M10 A4-70	SECHSKANTMUTTER		
6	420250114	4	WASHER ISO 7092 6 CU;	SCHEIBE		
9	11900503	1	WP	WP		
10	10573951	1	WP	WP		
11	10536580	8	WEDGE LOCK WASHER M10 254 SMO;EN 10	KEILSICHERUNGSSCHEIBE		
12	406509314	4	HEX SCREW ISO 4017 M10X35 A4-70	SECHSKANTSCHRAUBE		
13	10348618	1	DRIVER	MITNEHMER		
14	406518814	3	HEX SCREW ISO 4017 M8X20 A4-70	SECHSKANTSCHRAUBE		
15	420001014	3	WASHER ISO 7089 8 A4	SCHEIBE		
16	485553914	3	HEX SCREW ISO 4017 M5X12 A4-70	SECHSKANTSCHRAUBE		
20	10348619	1	COUPLING	KUPPLUNG		
21	959712714	1	FLANGE	FLANSCH		

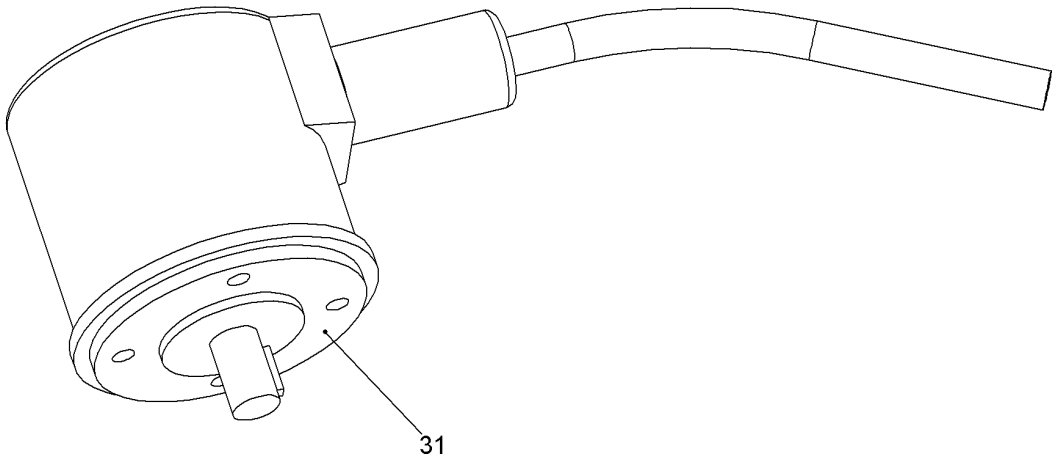

519698

Pos.	Item	Quantity	Description	Bezeichnung	Serie	K
31	10528626	1	SLEWING ANGLE TRANSDUCER	DREHWINKELMESSUMFORMER		

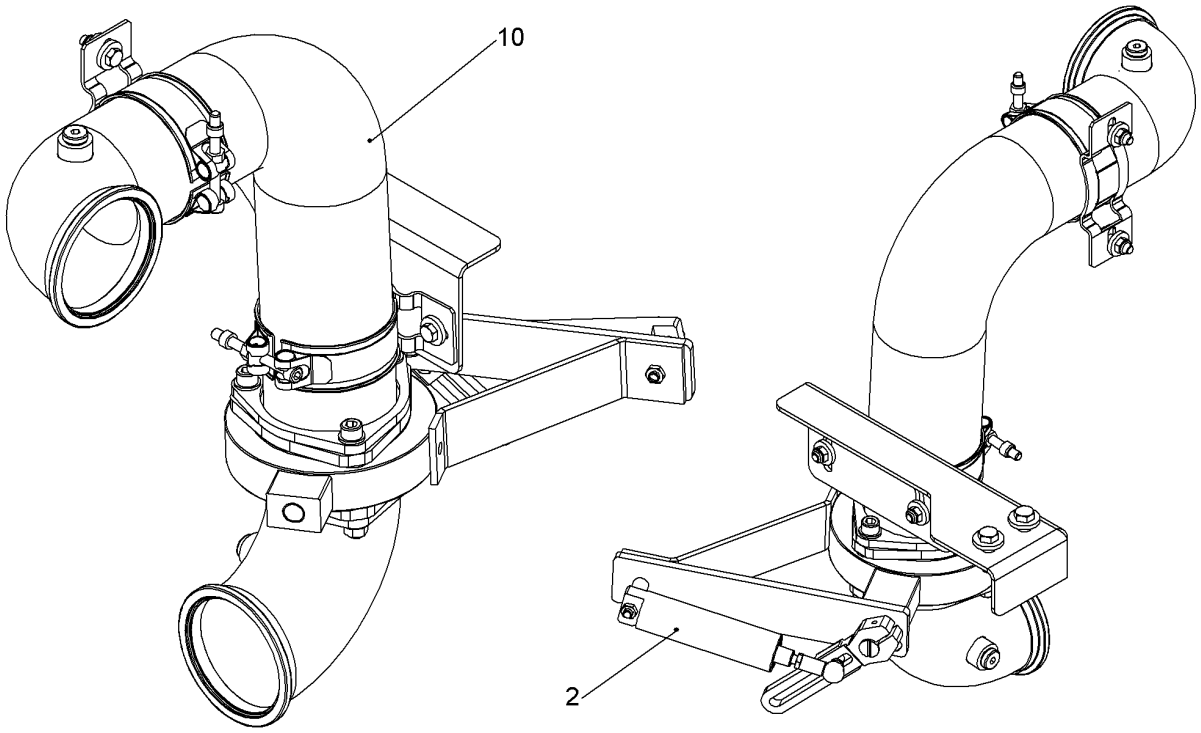

Pos.: 4 = SCHLAUCHLISTE
HOSE LIST

520298

Pos.	Item	Quantity	Description	Bezeichnung	Serie	K
2	11272671	1	AIR FLAPS HYDR RFK ⇨ ❑ 714	LUFTKLAPPEN HYDR NRS		
4	11895491	1	HOSE LIST ⇨ ❑ 717	SCHLAUCHLISTE		
10	11314463	1	CHARGE AIR PIPE CPL ⇨ ❑ 718	LADELUFTROHR KPL		

OHNE BILD
WITHOUT ILLUSTRATION
SANS PLANCHE
SIN FIG.
SEM ILUSTRAÇÃO
БЕЗ ИЗОБРАЖЕНИЯ

600000

Pos.	Item	Quantity	Description	Bezeichnung	Serie	K
2	10561735	1	TUBING HYDR ⇨ ❑ 715	VERROHRUNG HYDR		

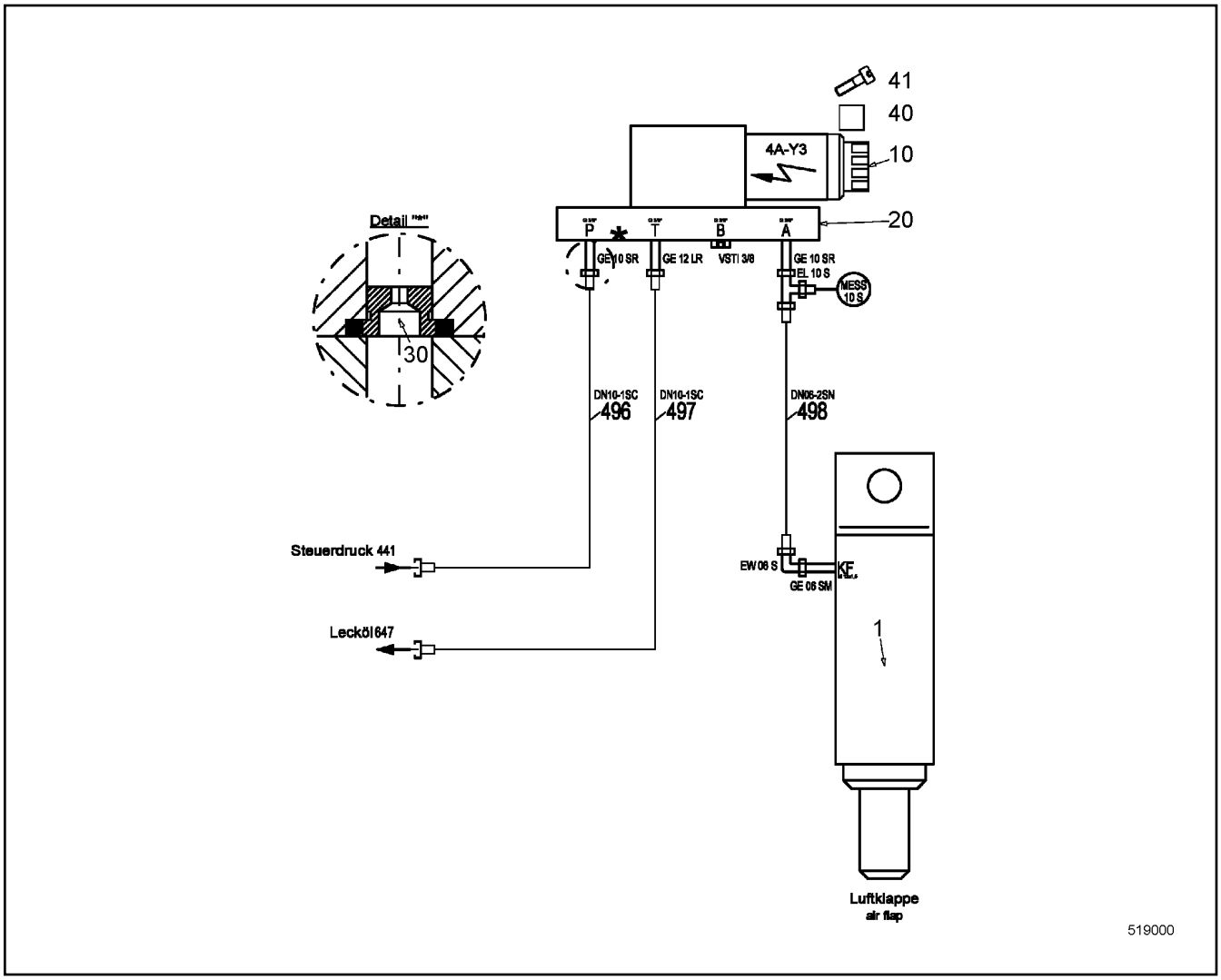

Pos.	Item	Quantity	Description	Bezeichnung	Serie	K
1	510336114	1	SINGLE-ACTING CYL ⇨ ❑ 716	EINFACHWIRKZYL		
10	511432714	1	DIRECTIONAL CONTROL VALVE	WEGEVENTIL		
20	510662914	1	CONNECTING PLATE	ANSCHLUSSPLATTE		
30	511464114	1	PLUG-IN NOZZLE	EINSTECKDUESE		
40	969329314	1	WELD PLATE	ANSCHWEISSPLATTE		
41	4600552	4	SOCKET HEAD SCREW ISO 4762 M5X50 10.9	ZYLINDERSCHRAUBE		
700	510694514	1	GAUGE CONNECTION	MESSSTUTZEN		
701	247128402	1	FITTING	VERSCHRAUBUNG		
702	7367776	1	FITTING	VERSCHRAUBUNG		
703	472531508	1	FITTING	VERSCHRAUBUNG		
704	471030208	1	FITTING	VERSCHRAUBUNG		
705	471032808	3	FITTING	VERSCHRAUBUNG		
706	247009402	2	FITTING	VERSCHRAUBUNG		

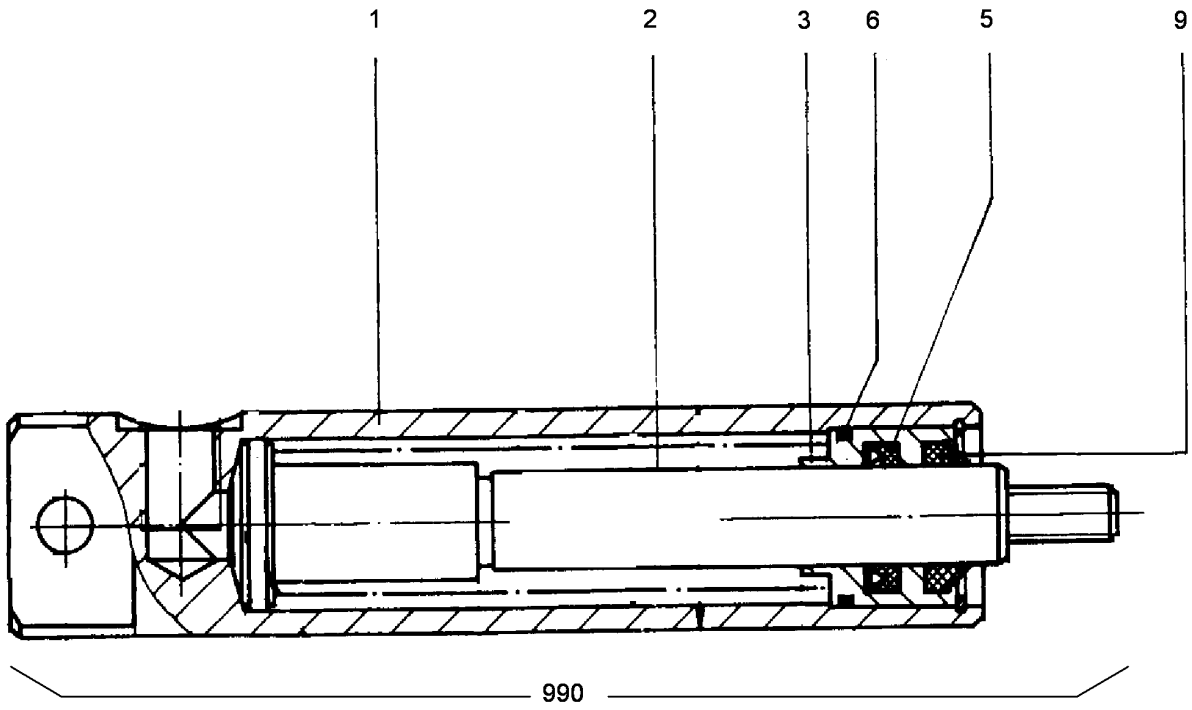

Pos.	Item	Quantity	Description	Bezeichnung	Serie	K
1	592138514	1	CYL	ZYL		
2	592138614	1	PISTON ROD	KOLBENSTANGE		
3	919515414	1	GUIDE	FUEHRUNG		
5	790354114	1	ROD SEAL	NUTRING		
6	790353814	1	O-RING	O-RING		
9	790354014	1	SCRAPER RING	ABSTREIFRING		
990	790353914	1	SEALING SET CPL CYL	DS KPL ZYL		

ACHTUNG !
ATTENTION !
ATTENTION !
ATENCIÓN !
ATENÇÃO !
ВНИМАНИЕ

Für Schlauchbestellungen kann über die Schlauchnummer, in der entsprechenden Schlauchliste, die Identnummer festgestellt werden.

For ordering flexible hoses you can find the identification number through the hose-number in the corresponding hose-list.

Pour des ordres de tuyau flexible le nombre d'identification on voit dans la liste de tuyau flexible correspondente.

Para el pedido de manguera, indicar el número de identificación de la manguera de la lista respectiva.

Para se encomendar uma mangueira, consulte o número de identificaçao na respectiva lista de mangueiras.

Для оформления заказов на шланги/рукавы идент. № может быть определен при помощи номера шланга/рукава, указанного в соотетствующем перечне шлангов/рукавов.

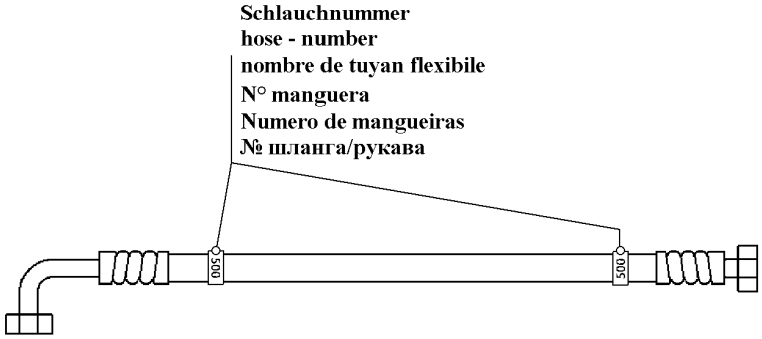

500000

Pos.	Item	Quantity	Description	Bezeichnung	Serie	K
496	996943814	1	HOSE CPL	SCHLAUCH KPL		
497	919796414	1	HOSE CPL	SCHLAUCH KPL		
498	918819614	1	HOSE CPL	SCHLAUCH KPL		

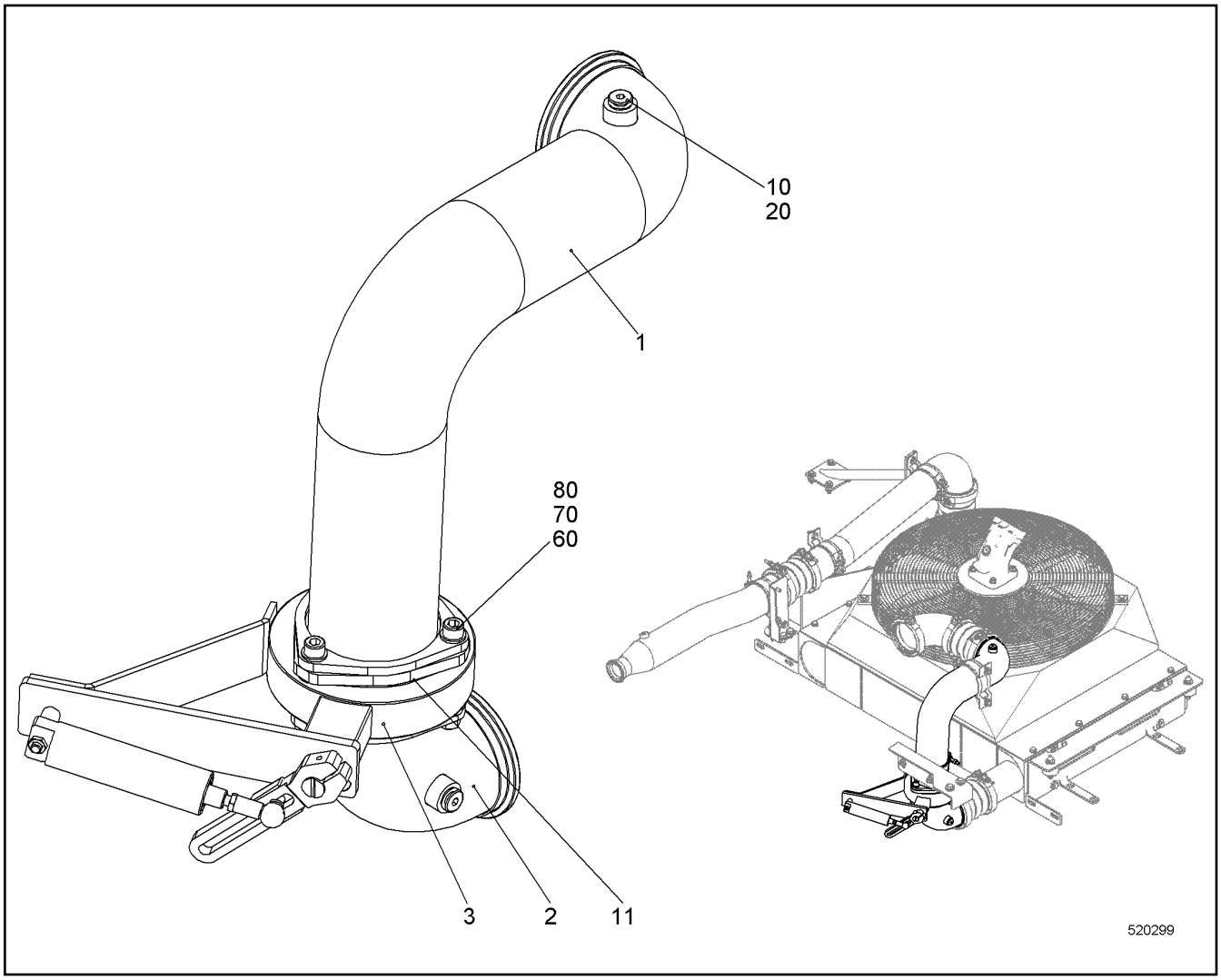

Pos.	Item	Quantity	Description	Bezeichnung	Serie	K
1	11890132	1	CHARGE AIR PIPE	LADELUFTROHR		
2	11890133	1	CHARGE AIR PIPE	LADELUFTROHR		
3	790319114	1	SHUT OFF DEVICE	ABSPERRORGAN		
10	710102514	2	SEALING RING	DICHTRING		
11	9271963	2	SEAL	DICHTUNG		
20	10598295	2	SCREW PLUG	VERSCHLUSSSCHRAUBE		
60	10539510	3	SOCKET HEAD SCREW ISO 4762 M10X90 A4-7	ZYLINDERSCHRAUBE		
70	420001114	6	WASHER ISO 7089 10 A4	SCHEIBE		
80	411514614	3	HEX NUT ISO 4032 M10 A4-70	SECHSKANTMUTTER		

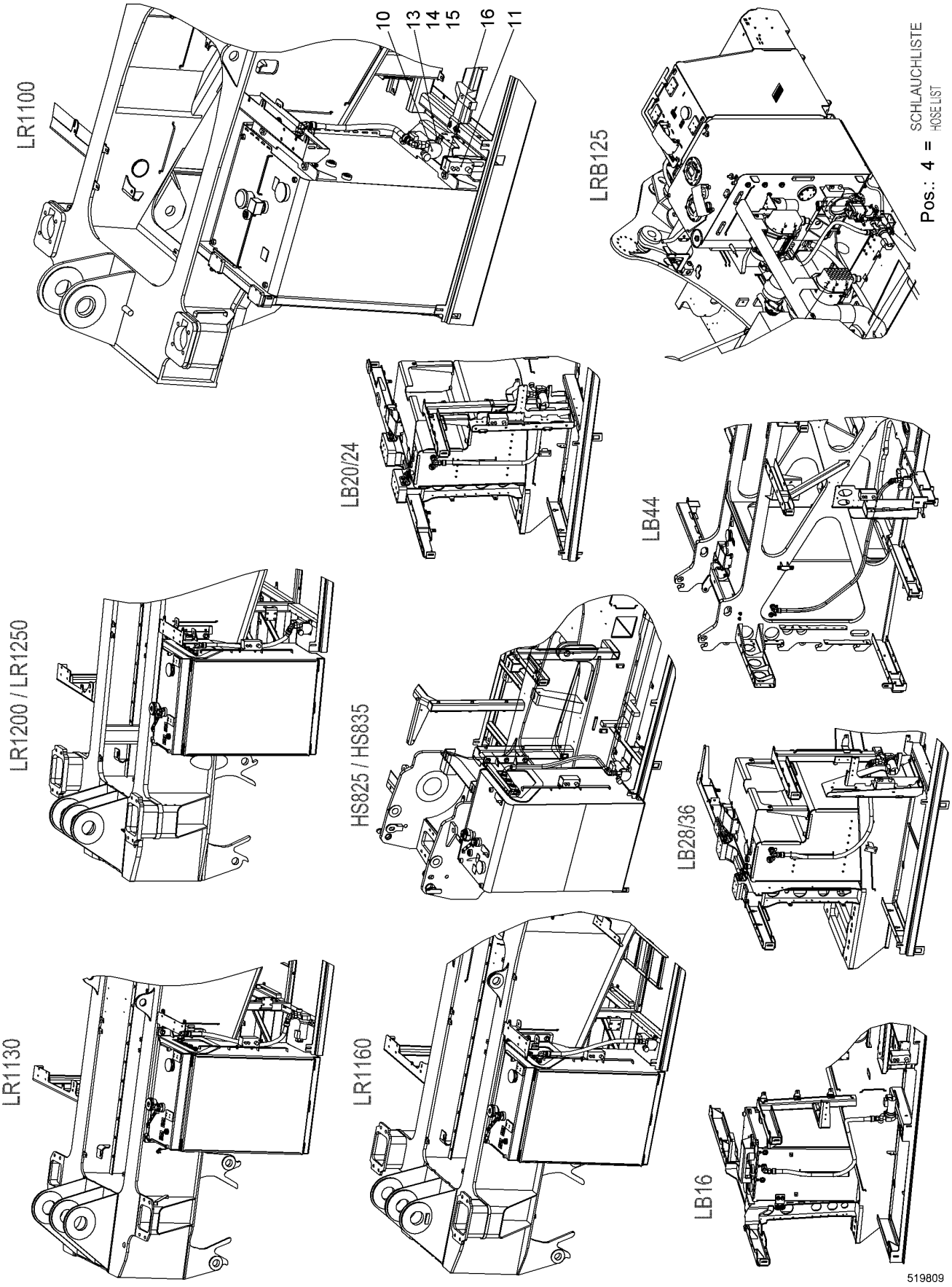
LR1100
10
13
14
15
16
11
LRB125
Pos.: 4 = SCHLAUCHLISTE
HOSE LIST
LB20/24
LB44
LR1200 / LR1250
HS825 / HS835
LB28/36
LR1130
LR1160
LB16
519809

Pos.	Item	Quantity	Description	Bezeichnung	Serie	K
4	10570894	1	HOSE LIST ⇨ ❑ 721	SCHLAUCHLISTE		
10	10529576	1	REFUELLING PUMP CPL ⇨ ❑ 722	BETANKUNGSPUMPE KPL		
11	10521559	1	MODULE REFUELLING SYSTEM ⇨ ❑ 724	MODUL BETANKUNGSANLAGE		
13	406517614	2	HEX SCREW ISO 4017 M8X35 A4-70	SECHSKANTSCHRAUBE		
14	420001014	2	WASHER ISO 7089 8 A4	SCHEIBE		
15	411515014	2	HEX NUT ISO 4032 M8 A4-70	SECHSKANTMUTTER		
16	10541563	2	PAN-HEAD SCREW ISO 7045 M5X25 A2-70	FLACHKOPFSCHRAUBE		
17	420005214	2	WASHER ISO 7089 5 A4	SCHEIBE		
18	10540510	2	WASHER ISO 7093-1 8 A4	SCHEIBE		
19	10541565	2	PAN-HEAD SCREW ISO 7045 M5X35 A2-70	FLACHKOPFSCHRAUBE		
20	10540484	2	HEX NUT ISO 10511 M5 A4	SECHSKANTMUTTER		
103	11288257	1	HOSE LIST ⇨ ❑ 726	SCHLAUCHLISTE		

ACHTUNG !
ATTENTION !
ATTENTION !
ATENCIÓN !
ATENÇÃO !
ВНИМАНИЕ

Für Schlauchbestellungen kann über die Schlauchnummer, in der entsprechenden Schlauchliste, die Identnummer festgestellt werden.

For ordering flexible hoses you can find the identification number through the hose-number in the corresponding hose-list.

Pour des ordres de tuyau flexible le nombre d'identification on voit dans la liste de tuyau flexible correspondente.

Para el pedido de manguera, indicar el número de identificación de la manguera de la lista respectiva.

Para se encomendar uma mangueira, consulte o número de identificaçao na respectiva lista de mangueiras.

Для оформления заказов на шланги/рукавы идент. № может быть определен при помощи номера шланга/рукава, указанного в соотетствующем перечне шлангов/рукавов.

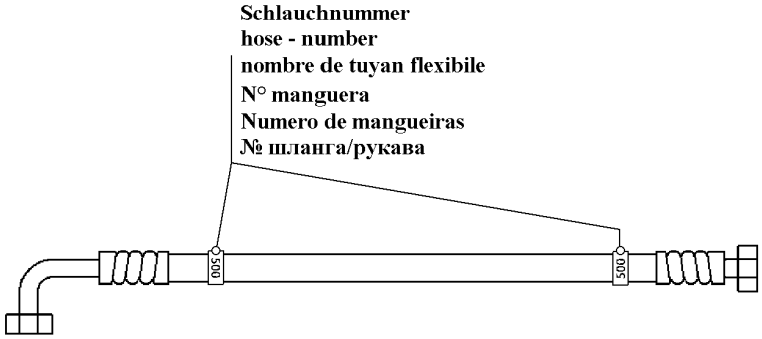

500000

Pos.	Item	Quantity	Description	Bezeichnung	Serie	K
804	995830614	1	HOSE CPL	SCHLAUCH KPL		

OHNE BILD
WITHOUT ILLUSTRATION
SANS PLANCHE
SIN FIG.
SEM ILUSTRAÇÃO
БЕЗ ИЗОБРАЖЕНИЯ

600000

Pos.	Item	Quantity	Description	Bezeichnung	Serie	K
10	510095914	1	REFUEL PUMP ⇨ ❑ 723	BETANKUNGSPUMPE		
11	693013014	1	PLUG	STECKER		
12	693013414	1	CONTACT LOCK	KONTAKTVERRIEGELUNG		
13	6905271	2	PIN CONTACT	STIFTKONTAKT		
14	605614714	2	SEALING PLUG	DICHTSTOPFEN		

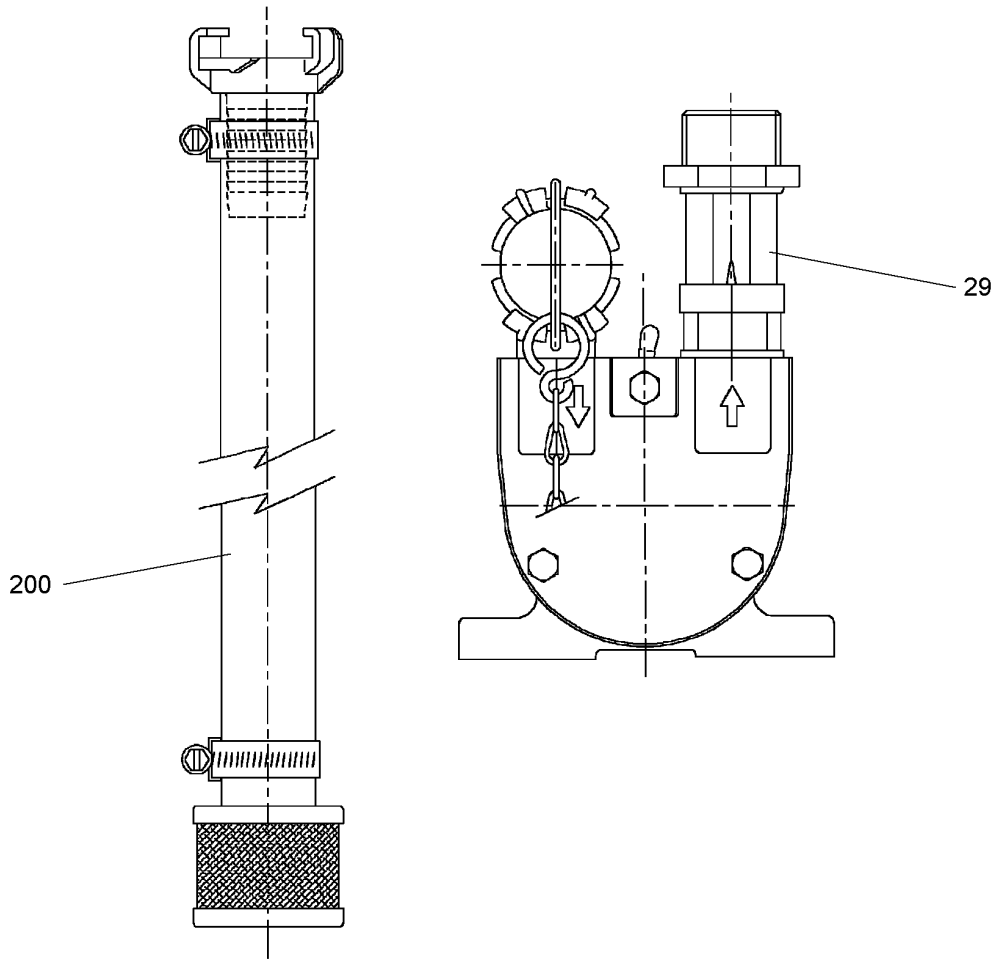

Pos.	Item	Quantity	Description	Bezeichnung	Serie	K
29	592052914	1	NON-RETURN VALVE	RUECKSCHLAGVENTIL		
200	11222864	1	HOSE CPL	SCHLAUCH KPL		

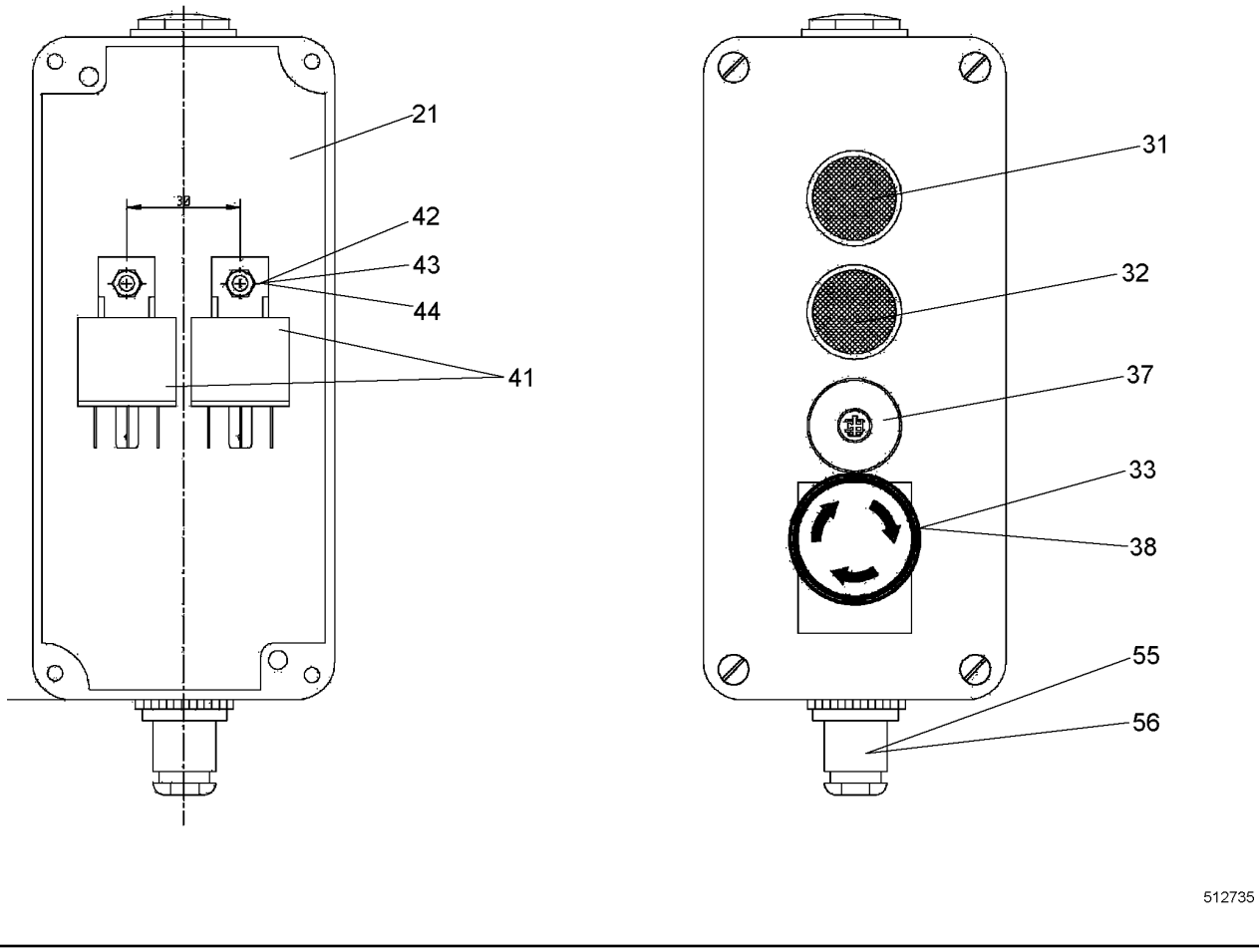

Pos.	Item	Quantity	Description	Bezeichnung	Serie	K
21	611039214	1	HOUSING	GEHAEUSE		
31	693003614	1	ILLUMINATED PUSHBUTTON	LEUCHTDRUCKTASTER		
32	693003414	1	PUSH BUTTON	DRUCKTASTER		
33	693073014	1	EMERGENCY STOP BUTTON	NOT-AUS TASTER		
37	606907114	1	STOPPER PLUG	BLINDSTOPFEN		
38	10575705	1	SIGN	SCHILD		
41	630160214	2	RELAY	RELAIS		

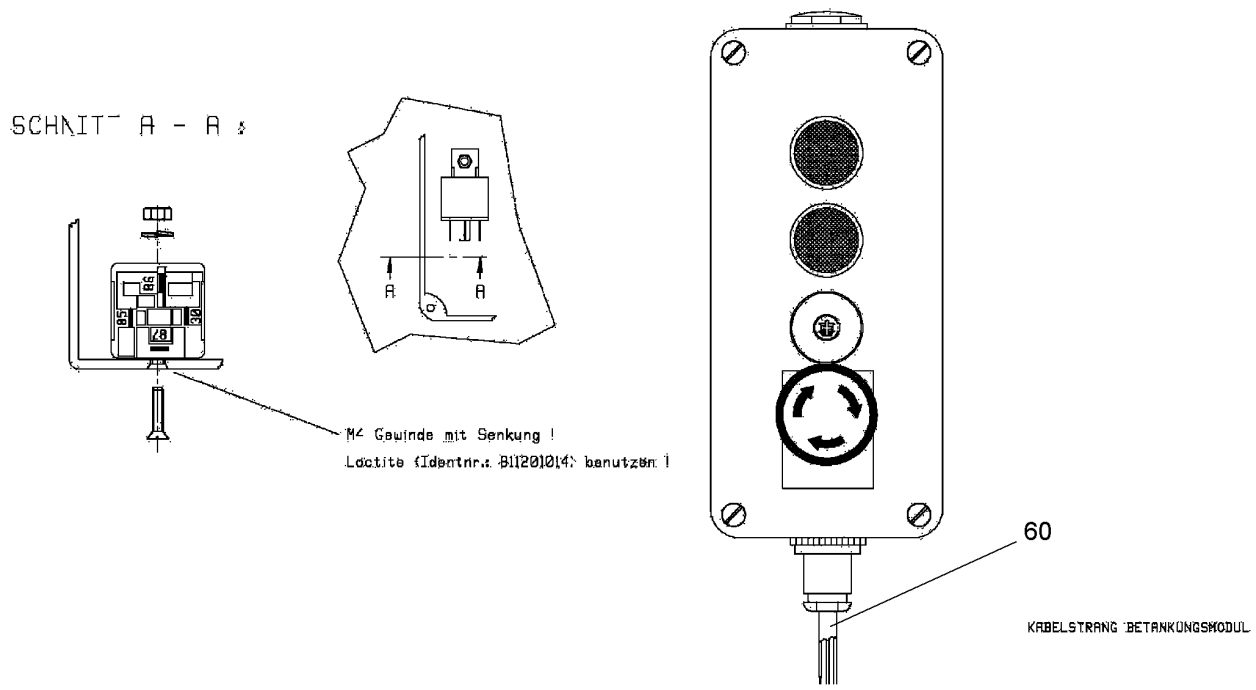

Pos.	Item	Quantity	Description	Bezeichnung	Serie	K
42	4001266	2	COUNTERSUNK SCREW ISO 2009 M4X8 4.8	SENKSCHRAUBE		
43	411551214	2	HEX NUT ISO 4032 M4 A4-70	SECHSKANTMUTTER		
44	10540497	2	WASHER ISO 7093-1 4 A4	SCHEIBE		
55	693148214	1	CABLE GLAND	KABELVERSCHRAUBUNG		
56	602604314	1	REDUCING PIECE	REDUZIERSTUECK		
60	10521560	1	CABLE LOOM REFUELLING SYSTEM	KABELSTRANG BETANKUNGSA		
70	602305914	1	FLAT PLUG HOUSING	FLACHSTECKERGEHAEUSE		
71	602203914	2	FLAT PLUG	FLACHSTECKER		

ACHTUNG !
ATTENTION !
ATTENTION !
ATENCIÓN !
ATENÇÃO !
ВНИМАНИЕ

Für Schlauchbestellungen kann über die Schlauchnummer, in der entsprechenden Schlauchliste, die Identnummer festgestellt werden.

For ordering flexible hoses you can find the identification number through the hose-number in the corresponding hose-list.

Pour des ordres de tuyau flexible le nombre d'identification on voit dans la liste de tuyau flexible correspondente.

Para el pedido de manguera, indicar el número de identificación de la manguera de la lista respectiva.

Para se encomendar uma mangueira, consulte o número de identificaçao na respectiva lista de mangueiras.

Для оформления заказов на шланги/рукавы идент. № может быть определен при помощи номера шланга/рукава, указанного в соотетствующем перечне шлангов/рукавов.

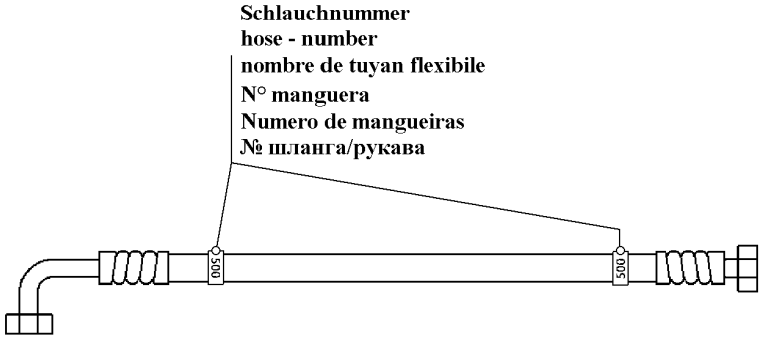

500000

Pos.	Item	Quantity	Description	Bezeichnung	Serie	K
805	919145114	1	HOSE CPL	SCHLAUCH KPL		

Item	Sheet	Assembly	Pos.	Quantity	Item	Sheet	Assembly	Pos.	Quantity
	343	10 51 969 7	500	-1		352	93 88 497 01	82	1
	343	10 51 969 7	501	-1		352	93 88 497 01	83	3
	352	93 88 497 01	1	1		353	93 88 497 01	84	1
	352	93 88 497 01	2	1		353	93 88 497 01	86	2
	352	93 88 497 01	3	1		353	93 88 497 01	87	1
	352	93 88 497 01	4	1		701	10 51 728 0	10	-1
	352	93 88 497 01	5	1	10002167	284	10 14 821 5	4	2
	352	93 88 497 01	6	1	10002309	145	10 12 224 8	24	1
	352	93 88 497 01	7	5	10002309	158	10 13 803 3	24	1
	352	93 88 497 01	8	5	10002310	12	11 41 737 0	3	1
	352	93 88 497 01	9	3	10002552	292	10 14 013 6	132	1
	352	93 88 497 01	10	1	10003366	277	90 78 314	3	1
	352	93 88 497 01	11	1	10004261	228	10 14 768 6	9	1
	352	93 88 497 01	12	1	10005073	252	10 12 948 0	4	4
	352	93 88 497 01	13	1	10005078	239	10 14 671 6	12	3
	352	93 88 497 01	15	1	10005078	270	10 14 588 5	18	1
	352	93 88 497 01	16	38	10005078	294	10 14 622 4	17	4
	352	93 88 497 01	17	114	10005078	305	10 15 028 8	60	3
	352	93 88 497 01	19	2	10005511	235	10 15 529 8	9	1
	352	93 88 497 01	20	1	10005713	254	10 13 394 5	2	1
	352	93 88 497 01	21	24	10006595	396	90 01 376 2	96	1
	352	93 88 497 01	22	1	10007782	232	10 14 201 8	10	6
	352	93 88 497 01	23	1	10007782	269	10 14 333 9	10	2
	352	93 88 497 01	25	1	10007782	305	10 15 028 8	63	1
	352	93 88 497 01	30	1	10007947	452	10 50 351 3	1	1
	352	93 88 497 01	31	1	10007948	453	10 00 794 7	1	1
	352	93 88 497 01	32	3	10007952	453	10 00 794 7	4	7
	352	93 88 497 01	33	3	10007967	453	10 00 794 7	7	1
	352	93 88 497 01	35	1	10007971	452	10 50 351 3	3	1
	352	93 88 497 01	40	1	10008092	177	11 21 593 6	25	1
	352	93 88 497 01	41	1	10008093	175	10 22 601 3	5	1
	352	93 88 497 01	42	3	10008093	177	11 21 593 6	30	1
	352	93 88 497 01	43	3	10009007	283	10 14 273 4	2	5
	352	93 88 497 01	45	1	10009007	287	10 14 274 4	3	1
	352	93 88 497 01	46	1	10011777	256	10 13 382 3	9	2
	352	93 88 497 01	47	3	10011832	228	10 14 768 6	13	1
	352	93 88 497 01	50	1	10011832	252	10 12 948 0	14	1
	352	93 88 497 01	51	1	10011864	14	11 41 475 7	8	2
	352	93 88 497 01	52	12	10011864	270	10 14 588 5	6	17
	352	93 88 497 01	53	12	10011864	294	10 14 622 4	7	2
	352	93 88 497 01	55	1	10011865	260	10 15 278 7	5	2
	352	93 88 497 01	56	12	10011865	270	10 14 588 5	11	2
	352	93 88 497 01	58	1	10011866	270	10 14 588 5	19	3
	352	93 88 497 01	59	2	10011866	285	10 14 821 7	2	11
	352	93 88 497 01	60	1	10011866	287	10 14 274 4	6	1
	352	93 88 497 01	61	1	10011867	14	11 41 475 7	4	8
	352	93 88 497 01	62	1	10011867	293	10 14 511 2	16	2
	352	93 88 497 01	63	2	10011868	238	10 13 451 7	2	1
	352	93 88 497 01	65	1	10011868	260	10 15 278 7	6	4
	352	93 88 497 01	70	1	10011868	269	10 14 333 9	7	14
	352	93 88 497 01	71	12	10011870	11	11 92 891 3	13	1
	352	93 88 497 01	72	1	10011870	274	10 14 736 9	8	1
	352	93 88 497 01	73	1	10011870	292	10 14 013 6	27	1
	352	93 88 497 01	74	1	10011871	270	10 14 588 5	14	2
	352	93 88 497 01	75	1	10012225	246	11 44 800 5	5	2
	352	93 88 497 01	76	1	10012557	246	11 44 800 5	3	2
	352	93 88 497 01	77	8	10012659	115	10 11 834 9	23	8
	352	93 88 497 01	78	8	10013916	279	90 72 906	4	1
	352	93 88 497 01	80	1	10014510	136	92 68 016	35	1
	352	93 88 497 01	81	1	10014638	273	10 14 736 6	3	6

Item	Sheet	Assembly	Pos.	Quantity	Item	Sheet	Assembly	Pos.	Quantity
10014638	280	10 14 286 0	4	2	10098157	510	11 23 820 3	42	53
10014864	270	10 14 588 5	7	1	10098157	521	10 58 193 7	20	6
10016874	157	10 12 226 2	17	2	10098157	552	11 28 390 8	21	3
10016906	267	10 14 679 7	4	2	10098157	553	11 28 391 3	12	2
10016906	274	10 14 736 9	15	2	10098157	568	11 28 583 8	21	3
10016906	300	10 11 912 8	3	4	10098157	575	11 28 626 1	21	3
10016906	301	10 12 843 9	3	1	10098157	581	11 28 629 9	21	4
10016906	305	10 15 028 8	61	22	10098157	635	11 24 147 8	10	12
10016907	232	10 14 201 8	11	3	10098157	636	11 24 575 5	10	28
10016908	12	11 41 737 0	2	3	10098157	649	10 55 280 7	13	4
10016947	159	10 13 803 4	28	2	10098157	651	11 30 694 4	15	3
10017158	234	10 14 844 4	5	1	10098157	652	11 23 827 7	5	2
10017870	153	10 14 131 6	25	4	10098157	653	11 30 567 0	12	1
10018711	277	90 78 314	2	4	10098157	657	10 55 514 8	11	18
10020161	321	10 57 883 5	6	2	10098789	331	11 24 922 2	22	1
10020161	323	10 57 897 6	12	2	10099005	373	99 29 389 14	1	1
10020161	325	10 57 940 0	9	1	10099005	374	99 29 392 14	1	1
10020161	326	10 56 623 7	9	2	10099007	375	99 29 388 14	5	1
10020161	327	10 56 580 8	12	2	10099009	376	99 29 386 14	3	10
10020487	321	10 57 883 5	4	1	10099009	377	99 29 434 14	3	10
10020487	323	10 57 897 6	4	1	10099010	372	99 33 537 14	6	1
10020487	327	10 56 580 8	4	1	10099037	35	10 52 459 5	1	24
10020512	317	11 24 409 1	9	1	10099055	446	11 89 300 5	12	2
10020519	345	10 51 969 8	8	1	10099140	382	10 51 968 2	16	2
10020520	653	11 30 567 0	10	1	10099173	528	10 51 959 1	2	2
10022192	356	93 36 755 01	24	1	10099300	620	10 51 726 2	8	1
10024012	695	10 53 246 1	31	1	10100303	247	10 13 475 1	3	5
10024012	697	10 50 775 0	31	1	10100303	248	10 12 653 5	3	5
10024115	282	11 44 013 4	3	4	10100303	250	10 13 469 6	4	5
10030518	281	10 14 611 7	2	4	10100304	234	10 14 844 4	4	2
10030518	288	10 14 601 2	16	1	10100666	434	10 22 506 8	40	1
10030518	294	10 14 622 4	18	1	10101193	30	11 28 647 6	201	1
10030518	305	10 15 028 8	68	2	10101458	170	10 32 489 2	9	3
10030837	226	11 38 961 7	14	14	10101657	280	10 14 286 0	6	1
10032001	215	10 30 300 7	7	1	10101657	281	10 14 611 7	3	4
10035314	8	11 92 958 8	35	1	10112497	256	10 13 382 3	17	1
10035314	212	11 24 114 4	20	1	10112497	280	10 14 286 0	2	4
10035580	228	10 14 768 6	6	1	10113710	295	10 14 584 5	4	1
10036107	408	10 51 907 9	11	1	10113711	234	10 14 844 4	2	33
10036325	246	11 44 800 5	8	1	10113731	253	10 15 259 2	3	1
10036473	261	10 15 286 7	4	1	10114153	228	10 14 768 6	5	9
10036473	263	10 14 114 0	2	1	10114975	176	11 21 591 3	2	1
10036473	265	10 13 543 2	3	1	10115224	455	11 22 473 8	6	1
10036809	516	11 90 151 1	42	1	10115230	455	11 22 473 8	11	1
10036950	435	70 24 996	17	1	10115232	455	11 22 473 8	13	1
10037312	228	10 14 768 6	4	8	10115237	177	11 21 593 6	28	2
10037623	183	10 22 358 1	1	1	10115237	455	11 22 473 8	25	4
10041876	280	10 14 286 0	17	1	10115240	455	11 22 473 8	27	1
10041903	228	10 14 768 6	10	5	10115241	455	11 22 473 8	49	1
10045155	516	11 90 151 1	21	2	10115304	456	10 44 656 6	3	1
10045155	595	97 14 959 03	34	1	10115576	299	10 11 557 7	1	1
10045157	516	11 90 151 1	22	1	10115577	224	12 42 545 4	520	1
10045157	516	11 90 151 1	37	1	10115623	292	10 14 013 6	18	1
10097551	111	11 26 744 7	4	1	10115664	224	12 42 545 4	452	1
10098106	442	99 18 041 14	12	2	10116078	268	10 14 675 3	4	1
10098106	640	99 10 116 14	45	2	10116110	224	12 42 545 4	521	1
10098143	89	99 16 061 14	1	2	10116255	278	10 29 998 8	1	1
10098157	315	11 24 409 0	60	11	10116767	280	10 14 286 0	1	1
10098157	329	10 54 591 0	18	20	10116928	240	90 76 458	50	1
10098157	483	99 26 718 14	12	28	10117768	164	10 13 452 1	11	1

Item	Sheet	Assembly	Pos.	Quantity	Item	Sheet	Assembly	Pos.	Quantity
10117891	251	10 12 948 1	2	1	10126738	228	10 14 768 6	2	1
10118349	94	11 24 773 5	4	1	10127323	293	10 14 511 2	9	13
10118350	115	10 11 834 9	3	1	10127478	139	10 12 878 7	7	1
10118357	117	10 11 835 0	90	1	10127479	144	10 12 747 8	10	1
10118367	115	10 11 834 9	83	1	10127967	302	10 12 797 9	1	1
10118556	273	10 14 736 6	2	6	10127979	225	12 42 545 4	526	1
10118695	291	10 14 737 0	3	4	10127984	202	11 24 114 1	30	9
10118912	303	10 11 892 9	4	10	10127984	275	10 14 736 4	2	1
10118928	303	10 11 892 9	1	1	10128100	264	10 13 508 0	4	1
10118929	225	12 42 545 4	530	1	10128228	294	10 14 622 4	9	4
10119128	225	12 42 545 4	522	1	10128439	225	12 42 545 4	524	1
10119129	300	10 11 912 8	1	1	10128440	301	10 12 843 9	1	1
10119695	245	10 14 843 8	2	2	10128559	260	10 15 278 7	2	1
10119923	252	10 12 948 0	3	2	10128671	260	10 15 278 7	1	1
10119971	239	10 14 671 6	9	1	10128678	260	10 15 278 7	3	1
10120188	256	10 13 382 3	7	1	10128787	94	11 24 773 5	6	1
10120372	224	12 42 545 4	450	1	10128875	292	10 14 013 6	24	1
10120443	241	10 12 134 5	3	1	10129179	264	10 13 508 0	5	1
10121091	121	90 74 418	1	1	10129218	214	10 55 091 1	4	1
10121335	241	10 12 134 5	2	1	10129382	264	10 13 508 0	7	1
10121345	223	12 42 545 4	52	1	10129385	264	10 13 508 0	10	1
10121893	11	11 92 891 3	11	1	10129420	141	11 36 218 7	9	2
10121893	274	10 14 736 9	10	1	10129479	252	10 12 948 0	1	1
10121952	241	10 12 134 5	1	1	10129480	251	10 12 948 1	1	1
10121971	256	10 13 382 3	2	4	10129481	223	12 42 545 4	130	1
10121982	256	10 13 382 3	5	1	10129501	253	10 15 259 2	4	1
10121983	256	10 13 382 3	4	1	10129819	269	10 14 333 9	8	1
10122245	146	10 13 802 5	7	1	10129873	161	10 12 987 4	11	1
10122246	146	10 13 802 5	8	1	10129874	94	11 24 773 5	12	1
10122248	139	10 12 878 7	80	1	10129874	139	10 12 878 7	300	1
10122262	139	10 12 878 7	85	1	10129904	276	10 14 967 6	4	1
10122265	158	10 13 803 3	4	1	10130005	139	10 12 878 7	301	1
10122317	307	10 14 637 4	1	1	10130007	162	10 13 000 5	11	1
10122692	146	10 13 802 5	4	1	10130757	264	10 13 508 0	2	1
10122693	235	10 15 529 8	10	1	10131081	264	10 13 508 0	1	1
10122841	286	10 14 274 2	2	1	10131350	239	10 14 671 6	1	1
10123210	159	10 13 803 4	4	2	10131768	223	12 42 545 4	80	6
10123214	142	10 12 942 0	90	1	10132069	256	10 13 382 3	1	1
10123236	152	10 14 131 7	2	2	10132073	290	10 14 144 3	10	4
10123256	149	98 85 937	10	2	10132074	256	10 13 382 3	3	1
10123257	149	98 85 937	11	2	10132170	270	10 14 588 5	3	1
10123258	149	98 85 937	12	2	10132180	270	10 14 588 5	20	1
10123528	153	10 14 131 6	3	1	10132357	139	10 12 878 7	302	1
10123671	239	10 14 671 6	3	1	10132360	163	10 13 235 7	11	1
10123876	305	10 15 028 8	103	2	10132558	292	10 14 013 6	4	4
10123877	184	11 24 448 7	12	2	10132935	270	10 14 588 5	16	1
10124239	153	10 14 131 6	4	1	10133077	306	10 14 297 7	20	2
10124798	276	10 14 967 6	5	2	10133334	115	10 11 834 9	8	1
10125386	234	10 14 844 4	6	1	10133641	232	10 14 201 8	3	1
10125439	244	10 13 176 8	3	6	10133667	244	10 13 176 8	2	1
10125702	276	10 14 967 6	9	2	10133684	256	10 13 382 3	6	1
10125740	292	10 14 013 6	3	1	10133823	255	10 13 394 7	1	1
10126090	232	10 14 201 8	4	1	10133945	223	12 42 545 4	140	1
10126091	232	10 14 201 8	2	1	10133947	223	12 42 545 4	141	1
10126317	239	10 14 671 6	7	1	10134348	228	10 14 768 6	3	2
10126427	234	10 14 844 4	3	1	10134517	223	12 42 545 4	22	1
10126510	247	10 13 475 1	2	1	10134521	139	10 12 878 7	304	1
10126510	248	10 12 653 5	2	1	10134561	123	10 13 333 4	12	1
10126510	250	10 13 469 6	3	1	10134695	250	10 13 469 6	1	1
10126535	223	12 42 545 4	83	1	10134696	223	12 42 545 4	84	2

Item	Sheet	Assembly	Pos.	Quantity	Item	Sheet	Assembly	Pos.	Quantity
10134698	248	10 12 653 5	1	1	10141261	217	11 24 114 5	15	1
10134750	247	10 13 475 1	1	1	10141316	152	10 14 131 7	1	1
10134751	223	12 42 545 4	82	3	10141317	139	10 12 878 7	83	1
10135080	263	10 14 114 0	1	1	10141438	289	10 14 144 4	7	24
10135432	223	12 42 545 4	192	6	10141440	290	10 14 144 3	1	1
10135434	223	12 42 545 4	193	6	10141442	290	10 14 144 3	2	2
10135441	235	10 15 529 8	2	1	10141443	289	10 14 144 4	1	1
10135472	142	10 12 942 0	10	1	10141444	224	12 42 545 4	410	1
10135885	289	10 14 144 4	2	6	10141520	290	10 14 144 3	5	2
10136800	232	10 14 201 8	1	1	10141549	275	10 14 736 4	1	1
10136801	233	10 13 680 0	1	1	10141790	224	12 42 545 4	217	1
10137108	127	90 77 464	40	1	10141983	223	12 42 545 4	53	1
10137108	153	10 14 131 6	29	3	10141986	269	10 14 333 9	4	1
10137108	158	10 13 803 3	19	1	10141988	269	10 14 333 9	1	1
10137108	159	10 13 803 4	30	3	10141989	269	10 14 333 9	2	1
10137113	158	10 13 803 3	20	3	10142006	270	10 14 588 5	8	1
10137113	159	10 13 803 4	24	4	10142018	223	12 42 545 4	16	1
10137115	153	10 14 131 6	27	2	10142080	269	10 14 333 9	3	1
10137115	159	10 13 803 4	27	2	10142567	193	11 24 113 9	4	1
10137121	115	10 11 834 9	28	2	10142668	287	10 14 274 4	1	1
10137121	138	92 76 408	29	2	10142734	224	12 42 545 4	370	1
10137121	139	10 12 878 7	21	1	10142742	224	12 42 545 4	382	1
10137312	153	10 14 131 6	20	1	10142744	224	12 42 545 4	387	1
10137312	159	10 13 803 4	20	1	10142747	225	12 42 545 4	630	1
10137721	299	10 11 557 7	5	1	10142749	223	12 42 545 4	15	6
10137839	147	10 13 802 6	43	4	10142763	287	10 14 274 4	2	1
10137839	153	10 14 131 6	43	4	10142860	224	12 42 545 4	340	1
10137918	229	10 13 845 0	2	1	10142864	224	12 42 545 4	481	1
10138025	139	10 12 878 7	81	1	10142942	223	12 42 545 4	150	1
10138026	146	10 13 802 5	2	1	10142977	225	12 42 545 4	581	1
10138027	147	10 13 802 6	1	1	10143235	270	10 14 588 5	1	1
10138032	139	10 12 878 7	84	1	10143304	288	10 14 601 2	15	1
10138032	158	10 13 803 3	6	1	10143339	224	12 42 545 4	212	1
10138033	139	10 12 878 7	90	1	10143510	243	10 14 636 7	1	1
10138034	158	10 13 803 3	3	1	10143607	146	10 13 802 5	6	1
10138068	140	10 12 878 7	305	1	10143612	276	10 14 967 6	1	1
10138069	165	10 13 806 8	11	1	10143614	276	10 14 967 6	2	1
10138079	267	10 14 679 7	3	1	10143827	271	10 14 382 8	2	4
10138231	223	12 42 545 4	100	1	10143828	224	12 42 545 4	215	1
10138450	223	12 42 545 4	14	1	10143829	271	10 14 382 8	1	1
10138565	254	10 13 394 5	1	1	10143831	271	10 14 382 8	4	1
10138772	289	10 14 144 4	5	24	10144027	225	12 42 545 4	652	1
10138820	284	10 14 821 5	3	1	10144034	309	11 40 371 1	10	1
10138820	293	10 14 511 2	4	1	10144038	217	11 24 114 5	7	1
10139391	232	10 14 201 8	6	1	10144039	217	11 24 114 5	5	1
10139393	232	10 14 201 8	5	1	10144086	308	11 90 032 5	5	1
10139539	234	10 14 844 4	7	1	10144093	217	11 24 114 5	13	1
10139624	292	10 14 013 6	1	1	10144102	308	11 90 032 5	31	1
10139752	115	10 11 834 9	84	1	10144123	305	10 15 028 8	11	1
10140136	224	12 42 545 4	430	1	10144282	218	11 24 114 5	66	1
10140137	292	10 14 013 6	7	1	10144297	218	11 24 114 5	67	1
10140138	292	10 14 013 6	17	1	10144699	308	11 90 032 5	20	1
10140599	240	90 76 458	51	1	10144861	217	11 24 114 5	14	1
10140603	240	90 76 458	52	1	10145100	242	11 34 807 2	2	1
10140969	287	10 14 274 4	5	1	10145101	242	11 34 807 2	3	1
10141051	309	11 40 371 1	30	1	10145112	224	12 42 545 4	432	1
10141140	262	10 15 315 1	200	1	10145229	298	10 14 286 4	1	1
10141215	261	10 15 286 7	210	1	10145373	294	10 14 622 4	2	1
10141216	262	10 15 315 1	210	1	10145395	295	10 14 584 5	6	1
10141216	263	10 14 114 0	12	1	10145845	224	12 42 545 4	440	1

Item	Sheet	Assembly	Pos.	Quantity	Item	Sheet	Assembly	Pos.	Quantity
10145864	244	10 13 176 8	1	1	10151637	231	10 15 163 4	2	1
10145885	224	12 42 545 4	214	1	10151825	269	10 14 333 9	5	1
10145889	270	10 14 588 5	13	1	10152036	306	10 14 297 7	2	1
10145914	293	10 14 511 2	12	1	10152592	252	10 12 948 0	10	1
10145918	237	10 14 591 9	2	1	10152593	253	10 15 259 2	1	1
10145919	223	12 42 545 4	21	1	10152594	253	10 15 259 2	2	1
10146012	224	12 42 545 4	388	1	10152787	258	10 15 085 7	210	1
10146018	288	10 14 601 2	1	1	10152787	259	10 15 074 3	4	1
10146117	224	12 42 545 4	342	1	10152867	223	12 42 545 4	190	6
10146224	224	12 42 545 4	436	1	10152874	261	10 15 286 7	200	1
10146274	293	10 14 511 2	3	1	10153118	293	10 14 511 2	1	1
10146358	243	10 14 636 7	5	1	10153151	223	12 42 545 4	191	6
10146367	223	12 42 545 4	70	6	10153373	280	10 14 286 0	5	1
10146374	225	12 42 545 4	656	1	10153606	223	12 42 545 4	180	1
10146405	305	10 15 028 8	14	1	10153669	286	10 14 274 2	1	1
10146415	266	10 13 543 4	1	1	10153973	227	10 15 445 8	1	1
10146538	219	11 24 240 8	6	1	10154385	226	11 38 961 7	1	1
10146587	305	10 15 028 8	10	1	10154458	226	11 38 961 7	80	6
10146716	223	12 42 545 4	25	1	10154459	227	10 15 445 8	2	1
10146753	267	10 14 679 7	1	1	10154798	284	10 14 821 5	2	1
10146795	225	12 42 545 4	571	1	10155297	235	10 15 529 8	1	1
10146797	224	12 42 545 4	201	1	10155298	234	10 14 844 4	1	1
10146836	294	10 14 622 4	3	1	10165637	434	10 22 506 8	65	1
10146838	294	10 14 622 4	4	1	10171583	471	96 93 178 01	49	3
10146839	294	10 14 622 4	5	1	10171585	396	90 01 376 2	72	1
10146840	294	10 14 622 4	6	1	10171594	471	96 93 178 01	29	3
10147364	224	12 42 545 4	224	1	10171632	396	90 01 376 2	67	1
10147366	224	12 42 545 4	220	1	10171632	472	94 44 043 03	7	1
10147368	274	10 14 736 9	2	1	10171636	471	96 93 178 01	73	1
10147369	224	12 42 545 4	221	1	10171639	473	94 44 048 03	7	1
10147370	224	12 42 545 4	415	1	10190120	356	93 36 755 01	10	1
10147371	291	10 14 737 0	1	1	10191905	349	96 96 248 01	6	24
10147437	223	12 42 545 4	50	1	10191905	350	93 88 500 01	11	18
10147686	223	12 42 545 4	12	1	10195680	51	10 56 645 8	31	1
10148088	295	10 14 584 5	1	1	10215806	531	51 04 292 14	1	2
10148200	284	10 14 821 5	1	1	10215808	531	51 04 292 14	999	1
10148215	224	12 42 545 4	380	1	10216718	391	11 94 017 7	7	1
10148217	224	12 42 545 4	381	1	10217777	301	10 12 843 9	2	1
10148254	228	10 14 768 6	1	1	10218013	251	10 12 948 1	3	18
10148438	223	12 42 545 4	81	6	10218370	297	11 38 664 5	2	1
10148444	223	12 42 545 4	20	1	10218953	62	10 51 572 4	3	1
10148669	308	11 90 032 5	4	1	10219458	293	10 14 511 2	7	4
10149013	235	10 15 529 8	11	1	10219458	295	10 14 584 5	3	2
10149145	293	10 14 511 2	2	1	10219869	150	10 14 360 7	22	4
10149191	294	10 14 622 4	1	1	10220937	168	11 22 127 4	25	1
10149198	258	10 15 085 7	220	1	10222935	504	10 56 187 5	92	2
10149198	259	10 15 074 3	5	1	10222994	510	11 23 820 3	46	1
10149360	280	10 14 286 0	3	2	10222995	510	11 23 820 3	59	2
10149477	295	10 14 584 5	2	1	10223180	406	10 55 963 5	31	1
10149655	229	10 13 845 0	1	1	10223208	432	11 93 934 6	30	1
10149676	224	12 42 545 4	230	1	10223209	432	11 93 934 6	80	1
10149699	285	10 14 821 7	1	1	10223210	432	11 93 934 6	170	1
10150144	262	10 15 315 1	2	1	10223224	402	11 27 970 6	16	1
10150287	305	10 15 028 8	2	1	10223362	321	10 57 883 5	10	1
10150288	225	12 42 545 4	580	1	10223371	370	99 29 258 14	11	1
10150743	258	10 15 085 7	1	1	10223446	321	10 57 883 5	19	1
10150743	258	10 15 085 7	200	1	10223447	321	10 57 883 5	3	1
10150857	223	12 42 545 4	171	1	10223448	321	10 57 883 5	11	1
10151634	230	10 14 274 9	1	1	10223449	321	10 57 883 5	16	1
10151636	231	10 15 163 4	1	1	10223581	94	11 24 773 5	19	1

Item	Sheet	Assembly	Pos.	Quantity	Item	Sheet	Assembly	Pos.	Quantity
10223693	313	11 24 409 0	33	2	10227757	483	99 26 718 14	17	4
10224159	183	10 22 358 1	3	1	10227828	358	99 23 387 14	10	1
10224272	46	11 24 519 0	61	2	10227855	661	10 51 971 2	1	2
10224272	403	11 27 973 6	49	3	10228470	30	11 28 647 6	167	5
10224306	47	10 53 048 9	1	1	10228541	142	10 12 942 0	20	2
10224306	407	99 20 811 14	21	2	10278936	81	10 56 069 4	6	40
10224307	47	10 53 048 9	11	3	10280543	666	11 23 619 7	27	4
10224307	407	99 20 811 14	22	2	10282622	254	10 13 394 5	100	1
10224316	45	11 24 519 0	33	1	10282622	299	10 11 557 7	100	1
10224316	47	10 53 048 9	3	1	10282622	302	10 12 797 9	100	1
10224413	423	10 35 007 6	1	1	10282774	227	10 15 445 8	4	2
10224500	46	11 24 519 0	100	4	10282849	243	10 14 636 7	6	1
10224607	678	11 89 408 3	2	1	10285620	119	10 11 835 7	25	2
10225045	47	10 53 048 9	4	4	10285620	120	92 74 731	27	2
10225068	402	11 27 970 6	11	1	10285708	12	11 41 737 0	100	1
10225291	26	11 29 618 6	710	3	10285708	227	10 15 445 8	100	1
10225408	85	10 51 969 5	4	1	10285708	228	10 14 768 6	100	1
10225695	313	11 24 409 0	37	2	10285708	255	10 13 394 7	100	1
10225925	20	11 29 618 6	21	1	10285708	274	10 14 736 9	100	1
10225991	182	51 14 145 14	10	1	10285708	275	10 14 736 4	100	1
10226013	94	11 24 773 5	9	1	10285708	276	10 14 967 6	100	1
10226190	78	99 08 706 14	1	1	10285708	283	10 14 273 4	100	1
10226400	560	99 24 404 14	10	2	10285708	284	10 14 821 5	100	1
10226401	569	99 24 405 14	10	2	10285708	286	10 14 274 2	100	1
10226401	576	99 24 406 14	10	4	10285708	288	10 14 601 2	100	1
10226402	522	99 30 060 14	11	4	10285708	307	10 14 637 4	100	1
10226402	560	99 24 404 14	11	4	10286648	696	10 53 352 4	4	1
10226402	569	99 24 405 14	11	4	10287664	177	11 21 593 6	1	1
10226402	576	99 24 406 14	11	8	10287665	177	11 21 593 6	2	1
10226402	588	99 24 594 14	18	4	10287725	178	10 28 766 4	1	1
10226454	419	10 35 008 0	2	1	10287733	179	10 28 766 5	1	1
10226457	422	95 95 763 14	9	1	10287741	179	10 28 766 5	6	1
10226458	422	95 95 763 14	15	1	10288174	8	11 92 958 8	32	1
10226459	421	10 22 645 4	222	1	10288438	45	11 24 519 0	52	1
10226461	421	10 22 645 4	228	1	10289804	299	10 11 557 7	8	17
10226462	421	10 22 645 4	300	1	10289931	106	11 21 993 0	24	1
10226463	421	10 22 645 4	305	1	10289973	434	10 22 506 8	41	1
10226471	426	59 22 871 14	14	1	10289975	434	10 22 506 8	43	4
10226472	423	10 35 007 6	18	1	10289976	434	10 22 506 8	72	1
10226473	423	10 35 007 6	19	1	10289988	434	10 22 506 8	2	1
10226477	423	10 35 007 6	24	1	10289990	434	10 22 506 8	70	1
10226478	423	10 35 007 6	21	1	10289993	434	10 22 506 8	50	1
10226479	423	10 35 007 6	5	1	10289994	436	10 28 999 3	55	1
10226505	94	11 24 773 5	8	1	10290537	14	11 41 475 7	10	1
10226573	343	10 51 969 7	3	1	10294170	215	10 30 300 7	9	1
10226573	517	11 90 151 1	91	1	10294171	215	10 30 300 7	4	1
10226574	618	10 51 743 9	3	1	10296818	517	11 90 151 1	92	1
10226635	184	11 24 448 7	21	1	10296909	30	11 28 647 6	133	14
10226750	661	10 51 971 2	2	2	10296919	65	10 56 073 3	13	1
10227104	519	61 61 541 14	1	1	10297295	257	10 14 294 2	1	2
10227124	483	99 26 718 14	11	1	10297876	171	10 35 160 3	2	1
10227126	519	61 61 541 14	8	1	10297876	180	10 11 497 5	2	1
10227128	519	61 61 541 14	7	1	10299988	277	90 78 314	1	1
10227129	519	61 61 541 14	9	1	10301757	30	11 28 647 6	169	2
10227399	346	51 22 527 14	60	1	10303007	214	10 55 091 1	1	1
10227437	666	11 23 619 7	30	1	10324860	170	10 32 489 2	7	1
10227531	8	11 92 958 8	16	0.5	10324863	170	10 32 489 2	1	9
10227531	218	11 24 114 5	71	6	10324872	170	10 32 489 2	6	1
10227556	407	99 20 811 14	2	1	10324881	170	10 32 489 2	10	1
10227563	406	10 55 963 5	79	2	10324886	170	10 32 489 2	11	1

Item	Sheet	Assembly	Pos.	Quantity	Item	Sheet	Assembly	Pos.	Quantity
10324889	168	11 22 127 4	1	1	10342191	241	10 12 134 5	4	3
10324892	169	10 32 488 9	1	1	10342275	453	10 00 794 7	12	14
10324900	171	10 35 160 3	4	1	10348527	599	79 03 862 14	13	1
10324901	170	10 32 489 2	2	1	10348618	711	10 52 293 0	13	1
10331335	215	10 30 300 7	13	1	10348619	711	10 52 293 0	20	1
10331395	215	10 30 300 7	14	1	10348694	588	99 24 594 14	11	4
10331506	313	11 24 409 0	39	6	10348867	650	11 29 473 7	15	4
10331506	510	11 23 820 3	20	19	10348867	654	11 29 474 2	16	4
10331506	523	99 34 198 14	13	8	10348867	655	11 29 474 3	18	4
10331507	329	10 54 591 0	11	6	10348867	657	10 55 514 8	15	4
10331507	376	99 29 386 14	10	2	10349193	106	11 21 993 0	22	1
10331507	377	99 29 434 14	10	2	10349193	106	11 21 993 0	23	1
10331507	553	11 28 391 3	13	2	10349206	329	10 54 591 0	7	8
10331507	591	99 30 800 14	17	2	10349263	315	11 24 409 0	52	24
10331507	659	11 26 901 8	18	4	10349402	631	10 55 372 1	19	10
10332095	155	10 12 323 6	90	1	10349434	333	11 24 483 7	21	4
10332095	159	10 13 803 4	2	2	10349439	339	99 27 572 14	12	6
10333464	267	10 14 679 7	2	3	10349440	339	99 27 572 14	11	8
10334218	294	10 14 622 4	11	1	10349598	511	11 23 820 3	81	2
10336008	307	10 14 637 4	3	3	10349598	555	11 28 397 8	10	1
10336583	57	10 51 961 6	10	2	10349598	557	11 28 399 7	10	1
10336584	57	10 51 961 6	11	2	10349599	511	11 23 820 3	82	2
10336668	467	11 89 365 0	8	30	10349599	554	11 28 397 7	10	1
10336668	478	11 89 365 1	8	30	10349599	556	11 28 399 5	10	1
10336682	313	11 24 409 0	4	1	10349716	30	11 28 647 6	901	1
10336707	376	99 29 386 14	1	3	10349756	335	11 24 483 7	93	6
10336707	377	99 29 434 14	1	3	10349776	30	11 28 647 6	900	1
10336708	376	99 29 386 14	2	8	10349778	30	11 28 647 6	132	1
10336708	377	99 29 434 14	2	8	10350076	419	10 35 008 0	3	1
10336709	375	99 29 388 14	1	1	10350080	402	11 27 970 6	10	1
10336711	373	99 29 389 14	2	2	10350084	523	99 34 198 14	11	4
10336711	374	99 29 392 14	2	2	10350190	612	11 27 482 9	2	2
10336722	376	99 29 386 14	4	3	10350196	606	11 48 116 2	2	1
10336722	377	99 29 434 14	4	3	10350230	98	11 24 682 0	130	2
10336761	542	99 26 417 14	11	8	10350232	98	11 24 682 0	290	4
10336763	370	99 29 258 14	5	3	10350334	403	11 27 973 6	71	2
10336774	545	99 29 588 14	11	1	10350439	195	11 24 114 0	46	1
10336774	546	10 35 063 3	11	2	10350539	645	97 05 997 03	10	2
10336904	542	99 26 417 14	10	2	10350546	87	10 22 540 8	2	1
10336924	542	99 26 417 14	16	8	10350585	66	11 28 086 8	1	1
10336926	542	99 26 417 14	17	8	10350604	183	10 22 358 1	2	1
10336928	542	99 26 417 14	18	4	10350632	546	10 35 063 3	10	1
10336968	387	51 14 347 14	120	1	10350633	544	11 28 594 7	11	2
10336970	522	99 30 060 14	10	2	10350633	564	11 28 619 1	11	2
10337050	102	11 21 992 7	4	1	10350633	571	11 28 653 4	11	2
10337050	103	11 21 992 9	4	1	10350932	191	10 57 532 2	9	1
10337050	106	11 21 993 0	12	1	10350940	660	10 51 971 3	22	4
10337050	106	11 21 993 0	13	1	10350978	94	11 24 773 5	32	1
10337050	106	11 21 993 0	14	1	10351046	8	11 92 958 8	57	1
10337050	106	11 21 993 0	15	1	10351101	406	10 55 963 5	60	1
10337050	106	11 21 993 0	16	1	10351102	406	10 55 963 5	61	3
10337050	106	11 21 993 0	17	1	10351103	406	10 55 963 5	62	1
10337050	106	11 21 993 0	18	1	10351104	406	10 55 963 5	63	2
10337050	114	11 21 991 8	26	1	10351105	406	10 55 963 5	64	1
10337052	106	11 21 993 0	21	1	10351106	406	10 55 963 5	65	3
10337090	195	11 24 114 0	45	1	10351108	406	10 55 963 5	59	2
10337130	380	99 04 645 14	20	8	10351188	2	01 38 376 14	8	2
10337309	588	99 24 594 14	10	2	10351239	686	59 21 826 14	205	2
10340226	215	10 30 300 7	20	2	10351486	20	11 29 618 6	3	1
10340236	215	10 30 300 7	19	2	10351499	685	59 21 826 14	120	2

Item	Sheet	Assembly	Pos.	Quantity	Item	Sheet	Assembly	Pos.	Quantity
10351547	317	11 24 409 1	7	7	10353879	326	10 56 623 7	10	1
10351548	317	11 24 409 1	8	1	10353879	327	10 56 580 8	6	1
10351603	167	11 22 126 8	2	1	10354595	234	10 14 844 4	100	1
10351605	168	11 22 127 4	22	1	10355006	211	11 24 114 3	23	2
10351605	174	10 35 161 0	22	1	10355730	177	11 21 593 6	15	1
10351608	168	11 22 127 4	23	4	10355731	177	11 21 593 6	16	1
10351608	174	10 35 161 0	23	4	10355735	177	11 21 593 6	27	4
10351610	166	10 22 650 5	99	1	10409413	171	10 35 160 3	1	1
10351656	45	11 24 519 0	21	1	10411092	297	11 38 664 5	4	1
10351660	45	11 24 519 0	23	1	10411093	297	11 38 664 5	6	2
10351667	45	11 24 519 0	22	1	10411094	297	11 38 664 5	3	1
10351668	45	11 24 519 0	26	1	10411095	297	11 38 664 5	5	2
10351671	45	11 24 519 0	24	1	10423993	37	10 59 143 5	900	1
10351672	45	11 24 519 0	27	1	10424238	106	11 21 993 0	30	3
10351674	45	11 24 519 0	28	1	10424276	404	11 27 973 6	85	1
10351784	321	10 57 883 5	14	1	10424333	235	10 15 529 8	14	3
10351784	323	10 57 897 6	14	1	10424333	276	10 14 967 6	11	2
10351784	325	10 57 940 0	14	1	10424724	392	10 65 027 0	2	1
10351784	326	10 56 623 7	14	1	10428121	425	11 25 097 0	1	1
10351784	327	10 56 580 8	16	1	10429946	268	10 14 675 3	2	2
10351894	343	10 51 969 7	11	4	10440788	276	10 14 967 6	8	2
10352111	60	10 56 070 1	16	1	10444797	218	11 24 114 5	75	1
10352119	486	11 26 260 6	12	1	10445040	529	10 09 917 3	220	1
10352119	501	11 26 261 1	12	1	10445043	510	11 23 820 3	47	1
10352185	43	10 22 592 5	1	1	10445101	446	11 89 300 5	8	1
10352186	43	10 22 592 5	2	1	10445102	446	11 89 300 5	7	1
10352187	43	10 22 592 5	3	1	10445105	20	11 29 618 6	19	1
10352188	43	10 22 592 5	5	1	10445126	513	10 51 826 1	3	1
10352312	685	59 21 826 14	35	1	10445127	446	11 89 300 5	20	2
10352313	685	59 21 826 14	40	1	10445629	440	11 30 962 5	1	2
10352315	685	59 21 826 14	55	1	10445635	70	11 27 315 5	13	1
10352319	685	59 21 826 14	60	1	10445651	333	11 24 483 7	39	2
10352344	685	59 21 826 14	65	1	10445976	413	69 31 685 14	1	1
10352349	685	59 21 826 14	70	2	10446225	94	11 24 773 5	14	1
10352352	685	59 21 826 14	75	2	10446305	94	11 24 773 5	28	1
10352353	685	59 21 826 14	80	1	10446566	455	11 22 473 8	14	1
10352354	685	59 21 826 14	95	1	10446871	467	11 89 365 0	47	6
10352355	685	59 21 826 14	110	1	10446871	478	11 89 365 1	47	6
10352356	685	59 21 826 14	105	3	10447016	541	99 14 137 14	7	6
10352357	685	59 21 826 14	115	1	10447016	618	10 51 743 9	23	12
10352359	685	59 21 826 14	130	4	10447017	415	91 65 251 14	10	4
10352361	685	59 21 826 14	135	1	10447017	593	99 48 521 14	38	2
10352362	685	59 21 826 14	145	1	10447017	618	10 51 743 9	20	10
10352364	685	59 21 826 14	150	1	10447258	423	10 35 007 6	47	1
10352365	685	59 21 826 14	155	1	10447259	421	10 22 645 4	39	1
10352368	685	59 21 826 14	140	1	10447743	458	10 44 510 1	1	1
10352371	685	59 21 826 14	170	1	10447744	457	10 44 510 2	1	1
10352382	685	59 21 826 14	175	1	10447745	42	10 44 510 5	1	1
10352383	686	59 21 826 14	180	2	10447747	459	10 55 154 8	2	4
10352384	686	59 21 826 14	185	1	10447747	514	10 55 157 6	2	6
10352446	529	10 09 917 3	900	1	10447748	42	10 44 510 5	4	6
10352447	662	10 22 785 5	1	1	10447748	457	10 44 510 2	4	4
10352453	207	11 24 114 2	17	1	10447748	458	10 44 510 1	4	4
10352462	552	11 28 390 8	17	0.422	10447749	42	10 44 510 5	5	1
10352462	568	11 28 583 8	17	0.422	10447749	457	10 44 510 2	5	1
10352462	575	11 28 626 1	17	0.422	10447749	458	10 44 510 1	5	1
10352462	659	11 26 901 8	15	0.22	10448187	70	11 27 315 5	14	1
10353879	321	10 57 883 5	20	1	10465711	228	10 14 768 6	15	1
10353879	323	10 57 897 6	3	1	10465711	288	10 14 601 2	11	1
10353879	325	10 57 940 0	10	1	10472425	22	11 29 618 6	109	18

Item	Sheet	Assembly	Pos.	Quantity	Item	Sheet	Assembly	Pos.	Quantity
10472425	94	11 24 773 5	70	3	10517439	3	01 38 376 14	550	1
10472425	362	10 51 968 7	616	2	10517914	650	11 29 473 7	10	1
10472425	448	11 89 300 5	631	10	10517914	654	11 29 474 2	10	1
10472425	486	11 26 260 6	740	5	10518261	508	11 23 820 3	2	1
10472425	501	11 26 261 1	740	5	10518461	467	11 89 365 0	41	1
10473040	591	99 30 800 14	22	1	10518461	478	11 89 365 1	42	1
10475718	392	10 65 027 0	4	1	10518558	622	10 52 439 2	1	1
10489016	273	10 14 736 6	4	6	10518558	622	10 52 439 2	2	5
10489016	288	10 14 601 2	14	3	10518558	674	99 27 747 14	1	3
10489376	275	10 14 736 4	3	3	10518558	691	10 53 635 2	1	2
10490781	22	11 29 618 6	110	19	10519025	455	11 22 473 8	30	1
10490781	94	11 24 773 5	72	2	10519079	403	11 27 973 6	10	1
10490781	345	10 51 969 8	630	2	10519082	404	11 27 973 6	201	1
10490781	385	10 55 216 1	641	2	10519084	404	11 27 973 6	203	1
10490784	22	11 29 618 6	106	4	10519085	404	11 27 973 6	204	1
10490784	94	11 24 773 5	71	13	10519481	92	11 24 048 0	15	1
10490784	385	10 55 216 1	640	4	10519591	526	10 58 510 8	2	1
10490784	528	10 51 959 1	660	1	10519616	18	11 24 047 9	14	1
10490784	668	10 51 973 8	615	1	10519631	18	11 24 047 9	21	1
10490785	22	11 29 618 6	107	4	10519682	2	01 38 376 14	27	1
10490787	22	11 29 618 6	108	5	10519683	382	10 51 968 2	2	1
10493626	45	11 24 519 0	50	1	10519686	359	10 51 969 1	1	1
10493626	306	10 14 297 7	1	2	10519687	361	10 51 968 6	2	1
10493890	44	55 09 453 14	901	1	10519691	2	01 38 376 14	25	1
10494116	211	11 24 114 3	21	2	10519694	18	11 24 047 9	51	1
10494116	308	11 90 032 5	21	2	10519695	83	10 51 969 4	2	1
10494117	308	11 90 032 5	22	2	10519696	2	01 38 376 14	31	1
10501620	44	55 09 453 14	1	1	10519697	2	01 38 376 14	23	1
10501783	475	10 50 179 5	1	1	10519698	343	10 51 969 7	2	1
10501795	467	11 89 365 0	32	6	10519712	660	10 51 971 3	2	1
10501795	478	11 89 365 1	32	6	10519713	3	01 38 376 14	642	1
10502692	47	10 53 048 9	5	1	10519738	666	11 23 619 7	2	1
10503477	451	51 24 059 14	13	1	10519789	207	11 24 114 2	74	4
10503513	451	51 24 059 14	1	1	10520078	46	11 24 519 0	131	1
10504352	601	79 04 112 14	1	1	10520927	65	10 56 073 3	14	1
10504352	608	79 05 205 14	1	5	10521183	467	11 89 365 0	12	1
10504737	86	59 21 041 14	190	1	10521183	478	11 89 365 1	12	1
10504994	693	11 23 623 3	9	1	10521397	202	11 24 114 1	35	4
10505322	529	10 09 917 3	50	1	10521554	4	01 38 376 14	858	1
10507750	694	11 89 400 8	8	1	10521559	720	10 52 155 4	11	1
10507964	51	10 56 645 8	56	12	10521560	725	10 52 155 9	60	1
10508505	637	11 27 109 7	17	1	10522188	426	59 22 871 14	4	1
10509133	79	10 56 067 3	3	2	10522189	426	59 22 871 14	7	1
10509153	631	10 55 372 1	32	4	10522190	426	59 22 871 14	5	1
10511274	2	01 38 376 14	15	1	10522845	599	79 03 862 14	1	1
10512048	420	10 35 008 0	101	1	10522847	599	79 03 862 14	2	1
10512061	420	10 35 008 0	89	1	10522848	599	79 03 862 14	3	1
10512662	432	11 93 934 6	40	1	10522930	4	01 38 376 14	828	1
10512821	420	10 35 008 0	88	2	10523125	510	11 23 820 3	38	2
10512966	441	10 51 969 6	10	80	10523559	467	11 89 365 0	11	1
10513459	94	11 24 773 5	17	1	10523559	478	11 89 365 1	11	1
10513605	8	11 92 958 8	46	1	10524392	618	10 51 743 9	4	1
10513605	202	11 24 114 1	31	5	10524422	3	01 38 376 14	401	1
10514797	629	54 02 705 14	17	6	10524595	34	10 35 148 6	1	1
10515473	46	11 24 519 0	66	2	10524927	404	11 27 973 6	100	1
10515724	60	10 56 070 1	12	1	10524927	539	10 53 120 7	37	2
10517262	619	10 54 251 6	2	1	10524928	404	11 27 973 6	90	1
10517280	4	01 38 376 14	719	1	10524928	539	10 53 120 7	35	2
10517281	701	10 51 728 0	2	1	10525039	106	11 21 993 0	42	1
10517426	46	11 24 519 0	81	1	10526560	338	99 23 386 14	11	1

Item	Sheet	Assembly	Pos.	Quantity	Item	Sheet	Assembly	Pos.	Quantity
10526733	60	10 56 070 1	11	1	10536580	640	99 10 116 14	52	16
10526837	218	11 24 114 5	84	2	10536580	711	10 52 293 0	11	8
10526837	402	11 27 970 6	55	1	10536581	538	11 24 444 4	24	8
10526837	480	11 31 390 8	13	16	10536581	590	99 23 398 14	29	8
10526962	406	10 55 963 5	21	1	10536582	361	10 51 968 6	21	13
10527391	700	10 57 848 6	1	1	10536582	370	99 29 258 14	1	8
10527561	396	90 01 376 2	74	12	10536600	361	10 51 968 6	15	22
10527918	710	10 57 790 9	4	1	10537558	439	10 53 756 0	1	1
10528589	65	10 56 073 3	18	1	10537560	402	11 27 970 6	45	1
10528626	712	10 52 952 2	31	1	10537562	439	10 53 756 0	2	1
10529071	699	10 58 064 7	11	1	10537566	439	10 53 756 0	3	1
10529074	699	10 58 064 7	12	1	10537607	34	10 35 148 6	10	2
10529080	699	10 58 064 7	14	1	10537682	581	11 28 629 9	1	1
10529084	699	10 58 064 7	15	1	10538796	658	10 55 722 4	12	2
10529086	699	10 58 064 7	16	1	10538797	614	11 22 322 6	2	4
10529089	699	10 58 064 7	17	1	10538799	218	11 24 114 5	83	2
10529210	60	10 56 070 1	14	1	10538799	616	11 21 552 4	12	2
10529522	711	10 52 293 0	3	1	10538800	8	11 92 958 8	60	2
10529576	720	10 52 155 4	10	1	10538801	480	11 31 390 8	31	8
10529597	406	10 55 963 5	57	1	10538806	640	99 10 116 14	33	2
10530197	98	11 24 682 0	360	8	10538807	313	11 24 409 0	36	5
10530200	98	11 24 682 0	440	12	10538807	483	99 26 718 14	13	16
10530243	539	10 53 120 7	31	2	10538807	510	11 23 820 3	54	17
10530322	517	11 90 151 1	93	1	10538807	552	11 28 390 8	24	3
10530398	484	11 26 260 5	10	1	10538807	568	11 28 583 8	24	3
10530398	499	11 26 261 0	10	1	10538807	575	11 28 626 1	24	3
10530418	552	11 28 390 8	14	1	10538807	635	11 24 147 8	11	12
10530418	568	11 28 583 8	14	1	10538807	636	11 24 575 5	11	16
10530486	47	10 53 048 9	6	1	10538808	593	99 48 521 14	49	2
10530487	47	10 53 048 9	7	1	10538809	188	11 24 113 8	50	2
10530489	45	11 24 519 0	34	1	10538809	195	11 24 114 0	64	2
10530653	94	11 24 773 5	5	2	10538809	212	11 24 114 4	60	2
10530689	510	11 23 820 3	23	2	10538809	551	11 28 725 5	13	2
10530689	523	99 34 198 14	12	4	10538810	510	11 23 820 3	37	2
10530689	553	11 28 391 3	10	1	10538812	510	11 23 820 3	29	4
10531207	538	11 24 444 4	3	1	10538822	640	99 10 116 14	50	8
10531224	701	10 51 728 0	3	1	10538823	207	11 24 114 2	62	4
10531413	578	11 24 132 4	3	1	10538823	585	11 28 357 6	9	4
10531718	408	10 51 907 9	12	1	10538824	188	11 24 113 8	51	6
10531725	95	11 24 773 5	616	1	10538824	211	11 24 114 3	61	2
10531873	510	11 23 820 3	15	2	10538826	633	10 55 372 1	40	4
10531873	552	11 28 390 8	16	1	10538830	335	11 24 483 7	74	8
10531873	568	11 28 583 8	16	1	10538834	480	11 31 390 8	24	8
10531873	575	11 28 626 1	16	1	10539250	46	11 24 519 0	71	1
10531873	659	11 26 901 8	13	2	10539293	79	10 56 067 3	17	6
10532461	694	11 89 400 8	7	1	10539293	335	11 24 483 7	100	1
10533524	695	10 53 246 1	50	1	10539293	666	11 23 619 7	8	2
10533589	381	11 22 703 7	12	1	10539294	647	10 55 601 0	14	2
10533999	83	10 51 969 4	12	2	10539300	22	11 29 618 6	62	24
10534039	83	10 51 969 4	13	4	10539300	362	10 51 968 7	615	2
10534042	83	10 51 969 4	14	8	10539300	446	11 89 300 5	19	16
10534307	94	11 24 773 5	3	2	10539300	486	11 26 260 6	750	8
10535526	545	99 29 588 14	12	1	10539300	501	11 26 261 1	750	16
10535526	546	10 35 063 3	12	2	10539305	446	11 89 300 5	17	8
10536350	4	01 38 376 14	650	1	10539307	486	11 26 260 6	10	4
10536351	688	10 53 635 0	2	1	10539307	501	11 26 261 1	10	4
10536352	688	10 53 635 0	4	1	10539311	362	10 51 968 7	6	6
10536576	659	11 26 901 8	20	4	10539315	193	11 24 113 9	62	4
10536579	510	11 23 820 3	19	4	10539315	361	10 51 968 6	29	2
10536579	582	11 28 610 5	16	4	10539315	467	11 89 365 0	35	4

Item	Sheet	Assembly	Pos.	Quantity	Item	Sheet	Assembly	Pos.	Quantity
10539315	478	11 89 365 1	35	4	10540492	335	11 24 483 7	84	3
10539316	68	10 55 268 1	4	4	10540492	467	11 89 365 0	39	6
10539316	681	11 89 568 6	30	8	10540492	478	11 89 365 1	39	6
10539317	64	10 56 073 2	60	6	10540492	511	11 23 820 3	83	32
10539317	188	11 24 113 8	59	8	10540492	521	10 58 193 7	14	18
10539317	335	11 24 483 7	103	2	10540492	538	11 24 444 4	31	8
10539317	467	11 89 365 0	52	54	10540492	554	11 28 397 7	19	1
10539317	478	11 89 365 1	52	54	10540492	555	11 28 397 8	19	1
10539317	590	99 23 398 14	31	2	10540492	556	11 28 399 5	19	1
10539318	188	11 24 113 8	58	8	10540492	557	11 28 399 7	19	1
10539318	357	96 96 543 01	7	8	10540492	616	11 21 552 4	14	2
10539318	480	11 31 390 8	17	28	10540492	633	10 55 372 1	35	24
10539318	590	99 23 398 14	38	2	10540492	649	10 55 280 7	23	2
10539448	51	10 56 645 8	57	12	10540492	657	10 55 514 8	21	2
10539454	581	11 28 629 9	26	4	10540492	699	10 58 064 7	23	6
10539454	582	11 28 610 5	9	8	10540493	8	11 92 958 8	81	6
10539462	137	92 73 187	74	4	10540493	71	11 26 557 2	16	2
10539466	540	91 90 584 14	5	1	10540493	77	10 58 163 4	17	2
10539467	538	11 24 444 4	28	2	10540493	188	11 24 113 8	84	8
10539483	315	11 24 409 0	40	8	10540493	196	11 24 114 0	81	12
10539483	415	91 65 251 14	9	4	10540493	202	11 24 114 1	80	14
10539485	629	54 02 705 14	18	6	10540493	205	11 28 574 7	80	2
10539486	627	54 02 703 14	50	1	10540493	207	11 24 114 2	80	4
10539488	361	10 51 968 6	25	4	10540493	212	11 24 114 4	80	2
10539492	8	11 92 958 8	62	2	10540493	218	11 24 114 5	102	8
10539492	552	11 28 390 8	23	2	10540493	315	11 24 409 0	41	23
10539492	568	11 28 583 8	23	2	10540493	335	11 24 483 7	85	37
10539492	575	11 28 626 1	23	2	10540493	361	10 51 968 6	26	4
10539496	652	11 23 827 7	2	2	10540493	376	99 29 386 14	13	2
10539505	218	11 24 114 5	86	4	10540493	377	99 29 434 14	13	2
10539505	340	10 52 656 0	15	8	10540493	483	99 26 718 14	16	8
10539508	626	54 02 702 14	22	6	10540493	510	11 23 820 3	25	64
10539510	718	11 31 446 3	60	3	10540493	521	10 58 193 7	19	6
10539513	396	90 01 376 2	86	12	10540493	523	99 34 198 14	15	8
10539520	350	93 88 500 01	6	3	10540493	552	11 28 390 8	30	6
10539524	77	10 58 163 4	29	1	10540493	553	11 28 391 3	14	2
10539530	380	99 04 645 14	22	12	10540493	568	11 28 583 8	30	6
10539631	467	11 89 365 0	45	2	10540493	575	11 28 626 1	30	6
10539631	478	11 89 365 1	45	2	10540493	581	11 28 629 9	44	4
10539959	329	10 54 591 0	14	8	10540493	591	99 30 800 14	24	2
10539959	633	10 55 372 1	41	34	10540493	593	99 48 521 14	39	12
10539960	664	99 35 606 14	13	1	10540493	633	10 55 372 1	42	40
10539971	591	99 30 800 14	11	1	10540493	635	11 24 147 8	12	12
10539971	593	99 48 521 14	45	1	10540493	636	11 24 575 5	12	12
10540082	510	11 23 820 3	68	2	10540493	640	99 10 116 14	35	2
10540182	387	51 14 347 14	230	1	10540493	647	10 55 601 0	19	2
10540347	72	11 22 312 3	1	1	10540493	649	10 55 280 7	16	4
10540484	71	11 26 557 2	15	2	10540493	652	11 23 827 7	6	2
10540484	79	10 56 067 3	21	2	10540493	653	11 30 567 0	80	1
10540484	80	11 31 093 2	12	4	10540493	659	11 26 901 8	24	4
10540484	402	11 27 970 6	47	4	10540493	666	11 23 619 7	6	4
10540484	510	11 23 820 3	67	8	10540493	699	10 58 064 7	24	2
10540484	581	11 28 629 9	43	4	10540494	8	11 92 958 8	82	11
10540484	582	11 28 610 5	19	8	10540494	57	10 51 961 6	20	2
10540484	720	10 52 155 4	20	2	10540494	60	10 56 070 1	80	4
10540492	8	11 92 958 8	80	2	10540494	68	10 55 268 1	5	1
10540492	196	11 24 114 0	80	9	10540494	79	10 56 067 3	15	4
10540492	211	11 24 114 3	84	3	10540494	196	11 24 114 0	82	18
10540492	218	11 24 114 5	101	10	10540494	202	11 24 114 1	81	10
10540492	315	11 24 409 0	46	10	10540494	211	11 24 114 3	80	2

Item	Sheet	Assembly	Pos.	Quantity	Item	Sheet	Assembly	Pos.	Quantity
10540494	218	11 24 114 5	106	2	10540510	720	10 52 155 4	18	2
10540494	311	11 24 114 6	83	6	10540511	8	11 92 958 8	74	18
10540494	313	11 24 409 0	30	54	10540511	57	10 51 961 6	14	14
10540494	329	10 54 591 0	8	4	10540511	68	10 55 268 1	7	2
10540494	331	11 24 922 2	28	12	10540511	77	10 58 163 4	55	4
10540494	335	11 24 483 7	76	83	10540511	79	10 56 067 3	4	4
10540494	510	11 23 820 3	53	22	10540511	311	11 24 114 6	70	51
10540494	545	99 29 588 14	15	2	10540511	313	11 24 409 0	26	134
10540494	546	10 35 063 3	15	2	10540511	331	11 24 922 2	26	89
10540494	554	11 28 397 7	18	2	10540511	335	11 24 483 7	77	125
10540494	555	11 28 397 8	18	2	10540511	402	11 27 970 6	40	8
10540494	556	11 28 399 5	18	4	10540511	511	11 23 820 3	86	16
10540494	557	11 28 399 7	18	4	10540511	545	99 29 588 14	16	2
10540494	581	11 28 629 9	67	8	10540511	554	11 28 397 7	15	2
10540494	584	10 59 863 3	21	1	10540511	555	11 28 397 8	15	2
10540494	585	11 28 357 6	11	4	10540511	556	11 28 399 5	15	4
10540494	591	99 30 800 14	12	1	10540511	557	11 28 399 7	15	4
10540494	593	99 48 521 14	47	1	10540511	581	11 28 629 9	35	8
10540494	633	10 55 372 1	39	54	10540511	593	99 48 521 14	46	2
10540494	647	10 55 601 0	16	2	10540511	633	10 55 372 1	44	78
10540494	651	11 30 694 4	16	3	10540511	647	10 55 601 0	17	4
10540494	657	10 55 514 8	12	18	10540511	664	99 35 606 14	12	2
10540494	664	99 35 606 14	14	1	10540511	666	11 23 619 7	7	4
10540494	666	11 23 619 7	9	2	10540512	77	10 58 163 4	34	9
10540495	77	10 58 163 4	36	4	10540512	335	11 24 483 7	71	11
10540495	79	10 56 067 3	20	2	10540512	442	99 18 041 14	14	2
10540495	189	10 51 948 1	81	6	10540513	666	11 23 619 7	24	2
10540495	211	11 24 114 3	82	4	10540846	404	11 27 973 6	98	1
10540495	218	11 24 114 5	105	1	10541109	406	10 55 963 5	32	1
10540495	335	11 24 483 7	70	8	10541514	20	11 29 618 6	6	1
10540495	361	10 51 968 6	23	2	10541536	402	11 27 970 6	19	20
10540495	467	11 89 365 0	19	152	10541540	437	11 26 095 6	4	11
10540495	478	11 89 365 1	19	152	10541561	402	11 27 970 6	28	16
10540495	510	11 23 820 3	24	2	10541561	438	97 07 857 03	6	3
10540495	559	11 94 087 8	13	4	10541563	720	10 52 155 4	16	2
10540495	633	10 55 372 1	56	10	10541565	720	10 52 155 4	19	2
10540495	637	11 27 109 7	14	2	10541592	666	11 23 619 7	22	4
10540495	699	10 58 064 7	26	2	10541593	218	11 24 114 5	85	6
10540497	725	10 52 155 9	44	2	10541593	593	99 48 521 14	42	4
10540500	211	11 24 114 3	73	6	10541838	613	11 90 722 6	32	1
10540500	335	11 24 483 7	67	6	10542325	404	11 27 973 6	96	1
10540500	699	10 58 064 7	27	9	10542435	412	38 50 944 14	1	1
10540510	8	11 92 958 8	71	6	10542516	618	10 51 743 9	2	1
10540510	75	92 65 477 14	12	2	10543902	188	11 24 113 8	60	12
10540510	77	10 58 163 4	16	4	10543902	350	93 88 500 01	31	10
10540510	315	11 24 409 0	43	13	10543902	357	96 96 543 01	11	4
10540510	335	11 24 483 7	86	34	10543902	382	10 51 968 2	15	4
10540510	361	10 51 968 6	27	4	10543902	590	99 23 398 14	39	4
10540510	376	99 29 386 14	12	2	10543903	58	10 56 070 0	62	3
10540510	377	99 29 434 14	12	2	10543903	357	96 96 543 01	3	28
10540510	511	11 23 820 3	79	49	10543903	361	10 51 968 6	13	4
10540510	552	11 28 390 8	28	5	10543904	58	10 56 070 0	63	3
10540510	568	11 28 583 8	28	5	10543905	188	11 24 113 8	61	8
10540510	575	11 28 626 1	28	5	10543905	361	10 51 968 6	28	12
10540510	581	11 28 629 9	34	4	10543907	94	11 24 773 5	57	4
10540510	582	11 28 610 5	15	4	10543910	467	11 89 365 0	27	8
10540510	647	10 55 601 0	20	2	10543910	478	11 89 365 1	27	8
10540510	659	11 26 901 8	21	4	10543914	188	11 24 113 8	62	2
10540510	666	11 23 619 7	26	8	10543917	498	10 57 462 9	4	1
10540510	699	10 58 064 7	32	4	10543918	640	99 10 116 14	48	2

Item	Sheet	Assembly	Pos.	Quantity	Item	Sheet	Assembly	Pos.	Quantity
10543919	207	11 24 114 2	63	2	10544174	467	11 89 365 0	21	2
10543919	538	11 24 444 4	48	2	10544174	478	11 89 365 1	21	2
10543919	640	99 10 116 14	51	2	10544174	480	11 31 390 8	19	4
10543920	361	10 51 968 6	14	22	10544174	497	11 22 050 0	14	4
10543920	467	11 89 365 0	44	4	10544174	503	11 22 050 1	14	4
10543920	471	96 93 178 01	87	2	10544174	538	11 24 444 4	15	8
10543920	478	11 89 365 1	41	4	10544174	559	11 94 087 8	12	4
10543921	480	11 31 390 8	18	4	10544174	618	10 51 743 9	17	8
10543921	538	11 24 444 4	49	2	10544174	642	99 10 125 14	4	1
10543922	94	11 24 773 5	58	4	10544175	498	10 57 462 9	3	1
10543922	618	10 51 743 9	25	4	10544176	467	11 89 365 0	33	12
10543924	497	11 22 050 0	15	4	10544176	478	11 89 365 1	33	12
10543924	503	11 22 050 1	15	4	10544177	467	11 89 365 0	28	64
10543925	471	96 93 178 01	68	12	10544177	469	10 55 716 2	13	4
10543932	467	11 89 365 0	4	4	10544177	478	11 89 365 1	28	64
10543932	478	11 89 365 1	4	4	10545451	83	10 51 969 4	4	1
10543944	467	11 89 365 0	25	12	10545854	467	11 89 365 0	22	2
10543944	478	11 89 365 1	25	12	10545854	478	11 89 365 1	22	2
10543975	511	11 23 820 3	75	8	10545854	538	11 24 444 4	47	4
10543975	552	11 28 390 8	22	4	10545910	313	11 24 409 0	2	1
10543975	568	11 28 583 8	22	4	10545911	313	11 24 409 0	3	1
10543975	575	11 28 626 1	22	4	10545914	313	11 24 409 0	5	1
10544017	188	11 24 113 8	63	2	10545915	313	11 24 409 0	6	1
10544028	467	11 89 365 0	10	64	10545916	313	11 24 409 0	7	1
10544028	478	11 89 365 1	10	64	10545917	313	11 24 409 0	8	1
10544044	486	11 26 260 6	751	4	10545918	313	11 24 409 0	10	1
10544050	446	11 89 300 5	18	16	10545957	313	11 24 409 0	11	1
10544065	77	10 58 163 4	26	8	10545958	313	11 24 409 0	12	1
10544068	191	10 57 532 2	63	4	10545968	329	10 54 591 0	3	1
10544072	350	93 88 500 01	12	6	10545969	329	10 54 591 0	4	1
10544092	94	11 24 773 5	63	4	10545970	329	10 54 591 0	5	1
10544093	94	11 24 773 5	62	4	10546335	329	10 54 591 0	6	1
10544105	382	10 51 968 2	12	48	10546407	329	10 54 591 0	9	2
10544113	660	10 51 971 3	16	8	10546993	535	11 27 536 5	20	2
10544121	660	10 51 971 3	17	8	10547876	45	11 24 519 0	32	2
10544154	188	11 24 113 8	80	10	10547904	365	10 55 156 3	10	1
10544155	510	11 23 820 3	36	8	10548543	20	11 29 618 6	35	1
10544155	552	11 28 390 8	29	4	10548553	380	99 04 645 14	59	1
10544155	568	11 28 583 8	29	4	10549545	402	11 27 970 6	53	1
10544155	575	11 28 626 1	29	4	10549547	402	11 27 970 6	51	1
10544157	618	10 51 743 9	18	4	10549800	402	11 27 970 6	52	1
10544158	188	11 24 113 8	81	2	10550739	406	10 55 963 5	75	22
10544159	660	10 51 971 3	30	8	10550911	212	11 24 114 4	10	1
10544172	188	11 24 113 8	72	48	10550970	446	11 89 300 5	2	1
10544172	335	11 24 483 7	102	2	10550993	581	11 28 629 9	12	2
10544172	382	10 51 968 2	14	4	10551191	446	11 89 300 5	21	2
10544172	467	11 89 365 0	36	12	10551548	446	11 89 300 5	9	2
10544172	478	11 89 365 1	36	12	10551563	361	10 51 968 6	10	1
10544172	480	11 31 390 8	15	28	10551576	513	10 51 826 1	2	1
10544172	510	11 23 820 3	43	8	10551670	593	99 48 521 14	33	2
10544172	552	11 28 390 8	26	4	10552085	361	10 51 968 6	4	1
10544172	568	11 28 583 8	26	4	10552161	383	10 51 968 3	2	1
10544172	575	11 28 626 1	26	4	10552306	68	10 55 268 1	1	1
10544172	681	11 89 568 6	40	8	10552633	467	11 89 365 0	14	16
10544173	68	10 55 268 1	6	4	10552633	478	11 89 365 1	14	16
10544173	511	11 23 820 3	74	8	10552681	18	11 24 047 9	20	1
10544173	552	11 28 390 8	27	4	10552807	647	10 55 601 0	12	1
10544173	568	11 28 583 8	27	4	10552807	650	11 29 473 7	11	1
10544173	575	11 28 626 1	27	4	10552807	654	11 29 474 2	11	1
10544174	207	11 24 114 2	75	2	10552807	655	11 29 474 3	11	1

Item	Sheet	Assembly	Pos.	Quantity	Item	Sheet	Assembly	Pos.	Quantity
10552808	649	10 55 280 7	10	1	10561838	504	10 56 187 5	1	1
10553070	654	11 29 474 2	12	1	10561875	2	01 38 376 14	50	1
10553070	655	11 29 474 3	12	3	10562107	202	11 24 114 1	28	1
10553403	217	11 24 114 5	46	6	10563073	313	11 24 409 0	16	1
10553721	3	01 38 376 14	553	1	10563082	313	11 24 409 0	25	1
10553922	94	11 24 773 5	11	1	10563099	329	10 54 591 0	1	1
10554227	651	11 30 694 4	11	1	10563643	45	11 24 519 0	13	1
10554228	651	11 30 694 4	12	1	10563800	539	10 53 120 7	41	1
10554229	649	10 55 280 7	11	2	10564158	346	51 22 527 14	14	1
10554231	649	10 55 280 7	12	2	10564433	681	11 89 568 6	10	4
10554335	20	11 29 618 6	54	8	10564692	657	10 55 514 8	10	2
10554336	193	11 24 113 9	70	1	10565367	708	10 56 536 8	1	1
10554368	654	11 29 474 2	13	2	10565368	705	11 93 621 2	12	1
10554368	655	11 29 474 3	13	2	10565639	521	10 58 193 7	11	2
10554368	655	11 29 474 3	14	2	10565777	327	10 56 580 8	1	1
10554594	689	10 53 635 1	2	1	10565808	317	11 24 409 1	13	1
10554881	655	11 29 474 3	15	2	10565879	327	10 56 580 8	10	1
10555148	3	01 38 376 14	625	1	10565889	327	10 56 580 8	2	1
10555185	651	11 30 694 4	13	4	10566030	43	10 22 592 5	4	1
10555261	643	99 23 420 14	8	2	10566237	317	11 24 409 1	6	1
10555411	439	10 53 756 0	9	1	10566238	326	10 56 623 7	1	1
10555973	365	10 55 156 3	2	1	10566239	326	10 56 623 7	12	1
10556010	3	01 38 376 14	620	1	10566458	46	11 24 519 0	103	1
10556011	647	10 55 601 0	10	1	10566842	317	11 24 409 1	1	1
10556012	648	10 55 601 1	2	1	10566932	650	11 29 473 7	14	2
10556014	648	10 55 601 1	3	1	10566932	654	11 29 474 2	15	2
10556597	195	11 24 114 0	12	1	10566932	655	11 29 474 3	17	2
10557117	666	11 23 619 7	5	1	10566932	657	10 55 514 8	14	2
10557161	467	11 89 365 0	2	1	10567120	98	11 24 682 0	450	1
10557161	478	11 89 365 1	2	1	10567564	681	11 89 568 6	33	3
10557162	468	10 55 716 1	1	1	10567619	195	11 24 114 0	13	2
10557163	468	10 55 716 1	2	1	10567622	195	11 24 114 0	31	4
10557217	647	10 55 601 0	11	1	10567956	467	11 89 365 0	5	8
10557223	647	10 55 601 0	13	2	10567956	478	11 89 365 1	5	8
10557224	3	01 38 376 14	626	1	10569443	570	11 93 702 0	11	2
10557413	658	10 55 722 4	10	2	10570894	720	10 52 155 4	4	1
10558762	467	11 89 365 0	34	1	10571340	195	11 24 114 0	14	2
10558762	478	11 89 365 1	34	1	10572054	681	11 89 568 6	14	4
10558857	510	11 23 820 3	45	2	10572058	681	11 89 568 6	11	4
10558857	551	11 28 725 5	12	2	10572075	421	10 22 645 4	36	1
10559163	631	10 55 372 1	18	2	10572149	432	11 93 934 6	250	1
10559635	403	11 27 973 6	8	1	10572236	459	10 55 154 8	1	1
10559638	406	10 55 963 5	25	1	10572236	514	10 55 157 6	1	2
10560228	505	10 56 183 8	1	1	10572241	459	10 55 154 8	3	1
10560673	18	11 24 047 9	45	1	10572242	514	10 55 157 6	3	1
10560674	79	10 56 067 3	1	1	10572531	516	11 90 151 1	20	1
10560687	331	11 24 922 2	10	1	10572706	68	10 55 268 1	2	2
10560688	331	11 24 922 2	17	1	10573892	602	10 50 435 2	2	1
10560690	331	11 24 922 2	16	1	10573893	602	10 50 435 2	3	2
10560691	331	11 24 922 2	11	1	10573951	711	10 52 293 0	10	1
10560692	331	11 24 922 2	12	1	10574043	604	11 27 463 8	3	1
10560694	18	11 24 047 9	49	1	10574237	195	11 24 114 0	10	1
10560700	18	11 24 047 9	15	1	10574239	202	11 24 114 1	1	1
10560701	58	10 56 070 0	3	1	10574357	319	11 24 409 1	19	2
10560703	60	10 56 070 1	3	1	10574364	319	11 24 409 1	18	2
10560732	18	11 24 047 9	16	1	10574629	497	11 22 050 0	11	4
10560733	64	10 56 073 2	10	1	10574629	503	11 22 050 1	11	4
10560734	65	10 56 073 3	10	1	10574630	498	10 57 462 9	1	1
10561735	714	11 27 267 1	2	1	10574631	498	10 57 462 9	2	1
10561780	382	10 51 968 2	4	1	10574725	637	11 27 109 7	11	1

Item	Sheet	Assembly	Pos.	Quantity	Item	Sheet	Assembly	Pos.	Quantity
10574837	631	10 55 372 1	15	1	10581992	510	11 23 820 3	51	2
10575306	195	11 24 114 0	4	1	10581999	521	10 58 193 7	21	2
10575307	195	11 24 114 0	5	1	10582001	511	11 23 820 3	77	1
10575322	189	10 51 948 1	3	1	10582001	521	10 58 193 7	22	1
10575323	191	10 57 532 2	3	1	10582020	510	11 23 820 3	50	2
10575566	202	11 24 114 1	10	1	10583346	311	11 24 114 6	10	1
10575567	202	11 24 114 1	11	1	10583347	311	11 24 114 6	11	1
10575599	579	10 53 141 3	21	1	10583559	331	11 24 922 2	15	1
10575705	724	10 52 155 9	38	1	10583611	331	11 24 922 2	19	1
10575966	333	11 24 483 7	17	1	10583612	331	11 24 922 2	20	1
10575967	333	11 24 483 7	13	1	10583642	315	11 24 409 0	51	1
10575968	333	11 24 483 7	15	1	10583845	365	10 55 156 3	4	1
10575969	333	11 24 483 7	18	1	10583864	365	10 55 156 3	1	1
10575970	333	11 24 483 7	23	8	10583865	365	10 55 156 3	3	1
10575971	333	11 24 483 7	37	3	10584105	315	11 24 409 0	50	1
10575980	333	11 24 483 7	30	3	10584123	315	11 24 409 0	47	1
10575981	333	11 24 483 7	11	1	10584124	315	11 24 409 0	48	1
10575984	333	11 24 483 7	14	1	10584210	315	11 24 409 0	49	1
10575985	333	11 24 483 7	20	2	10584544	60	10 56 070 1	15	1
10576104	333	11 24 483 7	19	1	10584671	432	11 93 934 6	50	1
10576718	608	79 05 205 14	12	2	10584890	638	11 23 740 7	11	1
10577229	217	11 24 114 5	40	1	10584965	601	79 04 112 14	11	4
10577909	705	11 93 621 2	20	1	10584965	608	79 05 205 14	11	8
10578321	77	10 58 163 4	12	1	10585108	525	11 29 259 8	2	1
10578343	77	10 58 163 4	33	1	10585445	626	54 02 702 14	12	2
10578486	699	10 58 064 7	10	1	10585909	631	10 55 372 1	20	1
10578835	317	11 24 409 1	3	1	10585910	631	10 55 372 1	21	1
10578836	321	10 57 883 5	1	1	10585911	631	10 55 372 1	22	1
10578841	321	10 57 883 5	12	1	10585912	631	10 55 372 1	23	1
10578845	18	11 24 047 9	31	2	10585913	631	10 55 372 1	24	2
10578971	323	10 57 897 6	10	1	10585914	631	10 55 372 1	25	1
10578972	323	10 57 897 6	1	1	10585915	631	10 55 372 1	26	1
10578976	317	11 24 409 1	4	5	10585916	631	10 55 372 1	27	1
10579070	191	10 57 532 2	50	6	10585917	631	10 55 372 1	28	1
10579104	189	10 51 948 1	10	1	10585919	631	10 55 372 1	30	1
10579145	326	10 56 623 7	2	1	10585920	631	10 55 372 1	31	1
10579155	191	10 57 532 2	11	2	10585923	631	10 55 372 1	10	1
10579397	325	10 57 940 0	1	1	10585924	631	10 55 372 1	11	1
10579400	317	11 24 409 1	5	1	10585925	631	10 55 372 1	12	1
10579423	325	10 57 940 0	12	1	10585926	631	10 55 372 1	13	1
10579454	325	10 57 940 0	2	1	10585933	631	10 55 372 1	16	2
10579755	188	11 24 113 8	3	2	10585936	631	10 55 372 1	17	1
10579757	333	11 24 483 7	26	1	10586253	77	10 58 163 4	50	1
10579779	188	11 24 113 8	5	1	10586854	633	10 55 372 1	62	1
10579806	217	11 24 114 5	41	1	10588168	77	10 58 163 4	18	1
10579877	702	10 51 728 1	7	1	10588224	702	10 51 728 1	10	1
10579979	79	10 56 067 3	7	1	10588723	530	59 20 224 14	1	1
10580170	92	11 24 048 0	19	1	10588725	530	59 20 224 14	4	1
10580585	57	10 51 961 6	12	1	10588729	530	59 20 224 14	5	1
10580647	694	11 89 400 8	11	1	10588730	58	10 56 070 0	12	3
10581173	217	11 24 114 5	20	2	10589204	510	11 23 820 3	58	2
10581486	325	10 57 940 0	15	1	10589483	469	10 55 716 2	14	1
10581590	319	11 24 409 1	21	1	10590183	469	10 55 716 2	12	4
10581634	18	11 24 047 9	35	1	10591343	402	11 27 970 6	54	1
10581765	195	11 24 114 0	58	1	10591435	34	10 35 148 6	8	1
10581765	217	11 24 114 5	50	1	10591681	601	79 04 112 14	50	4
10581937	510	11 23 820 3	48	1	10591682	601	79 04 112 14	18	4
10581980	511	11 23 820 3	84	1	10592334	584	10 59 863 3	19	1
10581981	511	11 23 820 3	85	1	10592555	380	99 04 645 14	30	1
10581982	511	11 23 820 3	95	1	10592569	2	01 38 376 14	14	1

Item	Sheet	Assembly	Pos.	Quantity	Item	Sheet	Assembly	Pos.	Quantity
10592619	333	11 24 483 7	43	1	10875360	45	11 24 519 0	39	3
10592621	333	11 24 483 7	44	1	10883842	304	12 42 558 9	1	1
10593096	83	10 51 969 4	23	8	11000593	294	10 14 622 4	13	2
10593474	104	11 21 991 0	3	1	11001743	264	10 13 508 0	6	1
10593504	98	11 24 682 0	320	2	11002988	260	10 15 278 7	4	1
10593544	402	11 27 970 6	48	2	11002988	269	10 14 333 9	9	1
10593554	402	11 27 970 6	49	1	11004752	255	10 13 394 7	2	3
10594064	94	11 24 773 5	13	1	11005281	294	10 14 622 4	10	7
10595126	365	10 55 156 3	200	1	11005554	215	10 30 300 7	17	1
10595280	192	10 58 017 0	12	2	11007749	143	10 12 321 4	14	1
10595399	46	11 24 519 0	72	1	11007751	143	10 12 321 4	13	1
10597776	385	10 55 216 1	620	4	11008055	274	10 14 736 9	3	1
10597981	79	10 56 067 3	2	2	11008787	217	11 24 114 5	9	2
10598295	202	11 24 114 1	55	4	11060522	207	11 24 114 2	20	1
10598295	718	11 31 446 3	20	2	11066168	254	10 13 394 5	4	1
10598537	191	10 57 532 2	8	1	11066361	254	10 13 394 5	3	2
10598633	583	99 06 461 14	1	1	11067304	104	11 21 991 0	5	1
10598700	451	51 24 059 14	9	1	11067305	104	11 21 991 0	6	1
10598777	455	11 22 473 8	23	2	11067653	214	10 55 091 1	8	2
10598959	521	10 58 193 7	10	1	11067863	217	11 24 114 5	54	4
10599053	521	10 58 193 7	24	1	11082116	261	10 15 286 7	3	1
10599206	408	10 51 907 9	31	1	11082116	265	10 13 543 2	2	1
10599215	408	10 51 907 9	32	1	11082158	217	11 24 114 5	12	2
10599567	109	11 06 730 4	6	1	11082454	217	11 24 114 5	22	2
10599571	333	11 24 483 7	46	1	11088130	238	10 13 451 7	1	1
10599614	333	11 24 483 7	47	1	11101351	219	11 24 240 8	5	1
10599757	195	11 24 114 0	6	1	11118160	229	10 13 845 0	6	1
10599758	195	11 24 114 0	7	1	11170484	153	10 14 131 6	26	2
10599759	195	11 24 114 0	8	1	11170484	159	10 13 803 4	26	2
10599796	200	11 28 734 7	13	1	11181806	298	10 14 286 4	2	2
10599854	333	11 24 483 7	49	1	11210610	608	79 05 205 14	50	4
10650270	388	51 22 991 14	31	1	11212730	109	11 06 730 4	10	1
10663840	8	11 92 958 8	28	1	11213816	608	79 05 205 14	4	1
10663840	217	11 24 114 5	24	4	11213818	608	79 05 205 14	14	2
10663904	414	11 26 095 7	32	1	11214714	452	10 50 351 3	7	1
10663954	414	11 26 095 7	50	2	11214718	452	10 50 351 3	10	1
10664204	45	11 24 519 0	31	2	11214719	452	10 50 351 3	11	1
10677274	414	11 26 095 7	23	1	11214818	408	10 51 907 9	10	1
10678754	217	11 24 114 5	23	2	11214820	337	10 51 127 4	10	1
10687924	410	10 03 610 7	82	1	11214946	456	10 44 656 6	1	1
10687925	410	10 03 610 7	80	1	11215379	616	11 21 552 4	10	1
10687926	410	10 03 610 7	81	1	11215384	188	11 24 113 8	6	1
10688831	613	11 90 722 6	31	1	11215385	207	11 24 114 2	13	1
10800103	413	69 31 685 14	2	1	11215524	3	01 38 376 14	510	1
10801399	293	10 14 511 2	17	2	11215698	175	10 22 601 3	2	1
10801869	155	10 12 323 6	16	1	11215699	175	10 22 601 3	3	1
10802833	177	11 21 593 6	22	1	11215707	177	11 21 593 6	23	4
10813933	14	11 41 475 7	6	1	11215913	175	10 22 601 3	1	1
10813933	270	10 14 588 5	9	2	11215936	176	11 21 591 3	1	1
10813934	293	10 14 511 2	18	1	11215942	180	10 11 497 5	1	1
10813935	270	10 14 588 5	12	2	11215951	171	10 35 160 3	3	4
10814912	601	79 04 112 14	12	2	11215951	180	10 11 497 5	3	4
10816957	8	11 92 958 8	27	1	11216088	77	10 58 163 4	32	1
10816957	217	11 24 114 5	27	5	11216342	484	11 26 260 5	3	1
10816958	217	11 24 114 5	49	1	11216342	499	11 26 261 0	3	1
10870540	51	10 56 645 8	251	10.7	11217079	102	11 21 992 7	5	3
10871759	8	11 92 958 8	25	1	11217079	103	11 21 992 9	5	3
10871759	217	11 24 114 5	21	6	11217169	217	11 24 114 5	47	6
10872307	8	11 92 958 8	9	1	11217232	313	11 24 409 0	18	4
10872598	8	11 92 958 8	30	1	11217289	191	10 57 532 2	5	1

Item	Sheet	Assembly	Pos.	Quantity	Item	Sheet	Assembly	Pos.	Quantity
11217500	705	11 93 621 2	11	1	11223305	38	59 21 458 14	2	2
11217837	168	11 22 127 4	30	1	11223691	404	11 27 973 6	211	1
11218236	510	11 23 820 3	70	1	11223693	418	11 22 369 1	5	2
11219056	214	10 55 091 1	6	2	11223717	404	11 27 973 6	210	2
11219067	214	10 55 091 1	7	2	11224738	451	51 24 059 14	2	1
11219069	214	10 55 091 1	5	2	11224740	451	51 24 059 14	25	1
11219179	46	11 24 519 0	65	2	11224761	455	11 22 473 8	7	1
11219265	543	11 23 749 8	10	2	11224762	455	11 22 473 8	12	2
11219265	562	11 23 290 7	10	2	11224767	455	11 22 473 8	22	4
11219265	563	11 23 292 2	11	2	11225259	331	11 24 922 2	23	3
11219265	597	11 25 204 2	10	2	11225402	315	11 24 409 0	63	2
11219350	99	10 53 430 7	4	1	11225403	456	10 44 656 6	2	1
11219356	100	11 21 990 2	4	1	11226015	387	51 14 347 14	10	1
11219368	104	11 21 991 0	2	1	11226016	387	51 14 347 14	20	1
11219369	104	11 21 991 0	4	1	11226017	387	51 14 347 14	30	1
11219373	112	11 21 935 0	4	8	11226019	387	51 14 347 14	40	1
11219374	112	11 21 935 0	8	1	11226023	387	51 14 347 14	60	2
11219375	113	11 21 991 7	2	2	11226035	387	51 14 347 14	80	1
11219376	114	11 21 991 8	10	1	11226084	387	51 14 347 14	90	1
11219647	406	10 55 963 5	58	1	11226086	387	51 14 347 14	92	1
11219851	563	11 23 292 2	12	2	11226088	387	51 14 347 14	100	2
11219851	597	11 25 204 2	11	2	11226090	387	51 14 347 14	110	1
11219856	562	11 23 290 7	11	1	11226118	387	51 14 347 14	130	1
11219861	563	11 23 292 2	10	1	11226127	387	51 14 347 14	140	1
11219883	704	11 22 037 2	1	1	11226129	387	51 14 347 14	150	1
11219902	99	10 53 430 7	1	1	11226130	387	51 14 347 14	160	1
11219905	99	10 53 430 7	2	1	11226133	387	51 14 347 14	165	1
11219910	99	10 53 430 7	3	1	11226135	387	51 14 347 14	170	1
11219917	99	10 53 430 7	5	1	11226137	387	51 14 347 14	180	4
11219918	99	10 53 430 7	6	1	11226139	387	51 14 347 14	190	4
11219920	100	11 21 990 2	1	1	11226142	387	51 14 347 14	200	1
11219922	100	11 21 990 2	2	1	11226144	387	51 14 347 14	210	4
11219924	100	11 21 990 2	3	1	11226148	387	51 14 347 14	220	1
11219925	101	11 21 990 5	1	1	11226980	673	59 21 584 14	6	1
11219927	101	11 21 990 5	2	1	11227037	2	01 38 376 14	26	1
11219929	101	11 21 990 5	3	1	11227045	381	11 22 703 7	10	1
11219930	104	11 21 991 0	1	1	11227046	381	11 22 703 7	11	1
11219933	104	11 21 991 0	8	1	11227203	62	10 51 572 4	1	1
11219934	113	11 21 991 7	1	1	11228227	666	11 23 619 7	25	1
11219936	114	11 21 991 8	11	8	11228726	649	10 55 280 7	20	1
11220320	455	11 22 473 8	20	2	11228726	657	10 55 514 8	17	1
11220320	455	11 22 473 8	21	2	11228734	647	10 55 601 0	23	1
11220372	4	01 38 376 14	723	1	11228734	650	11 29 473 7	16	1
11220389	168	11 22 127 4	24	1	11228734	654	11 29 474 2	17	1
11220389	174	10 35 161 0	24	1	11228734	655	11 29 474 3	19	1
11220468	704	11 22 037 2	5	1	11228734	657	10 55 514 8	18	1
11220477	704	11 22 037 2	10	1	11228766	649	10 55 280 7	19	1
11220500	484	11 26 260 5	11	1	11228766	657	10 55 514 8	16	1
11220501	499	11 26 261 0	11	1	11229182	34	10 35 148 6	4	1
11220932	166	10 22 650 5	4	1	11229183	34	10 35 148 6	5	1
11221267	166	10 22 650 5	5	1	11229184	34	10 35 148 6	7	1
11221268	166	10 22 650 5	1	1	11229185	34	10 35 148 6	9	1
11221274	167	11 22 126 8	1	1	11229186	37	10 59 143 5	1	2
11221276	167	11 22 126 8	5	1	11229464	214	10 55 091 1	3	1
11221283	173	11 22 127 6	2	1	11229635	45	11 24 519 0	30	3
11222864	723	51 00 959 14	200	1	11229706	525	11 29 259 8	4	1
11223086	614	11 22 322 6	1	1	11229709	660	10 51 971 3	4	1
11223123	70	11 27 315 5	12	1	11229805	207	11 24 114 2	30	2
11223226	613	11 90 722 6	10	1	11230237	538	11 24 444 4	44	9
11223233	380	99 04 645 14	4	1	11230438	460	51 33 141 14	4	1

Item	Sheet	Assembly	Pos.	Quantity	Item	Sheet	Assembly	Pos.	Quantity
11230660	432	11 93 934 6	270	1	11236511	191	10 57 532 2	45	1
11230849	538	11 24 444 4	18	2	11236513	191	10 57 532 2	47	1
11231269	489	10 53 039 8	2	1	11236514	191	10 57 532 2	43	1
11231270	489	10 53 039 8	3	1	11236515	191	10 57 532 2	41	1
11231317	491	11 89 322 8	3	1	11236517	191	10 57 532 2	40	1
11231319	491	11 89 322 8	5	1	11236518	191	10 57 532 2	46	1
11231322	492	11 23 126 9	1	1	11236557	615	11 25 016 2	10	1
11231336	493	11 23 127 0	1	1	11236707	706	11 21 750 0	1	1
11231673	581	11 28 629 9	19	2	11236708	706	11 21 750 0	2	1
11232399	508	11 23 820 3	4	1	11236709	706	11 21 750 0	3	1
11232788	705	11 93 621 2	22	1	11236711	706	11 21 750 0	4	1
11232907	548	11 93 749 9	14	8	11236712	706	11 21 750 0	5	1
11232907	566	11 93 750 1	14	8	11236713	706	11 21 750 0	6	1
11232907	573	11 93 750 4	14	16	11236714	706	11 21 750 0	7	1
11232907	578	11 24 132 4	15	2	11236937	52	11 23 908 2	10	1
11232922	548	11 93 749 9	15	4	11237407	3	01 38 376 14	583	1
11232922	566	11 93 750 1	15	4	11237423	638	11 23 740 7	10	1
11232922	573	11 93 750 4	15	4	11237498	536	11 23 937 8	13	4
11232922	578	11 24 132 4	16	4	11237759	601	79 04 112 14	9	4
11233062	590	99 23 398 14	42	1	11238202	508	11 23 820 3	10	1
11233289	30	11 28 647 6	121	4	11238203	2	01 38 376 14	59	1
11233292	30	11 28 647 6	124	4	11238277	650	11 29 473 7	17	1
11233296	30	11 28 647 6	135	2	11238277	654	11 29 474 2	18	2
11233332	30	11 28 647 6	148	1	11238277	655	11 29 474 3	20	4
11233333	30	11 28 647 6	150	2	11238277	657	10 55 514 8	22	2
11233338	30	11 28 647 6	151	8	11238278	652	11 23 827 7	1	1
11233401	30	11 28 647 6	153	10	11238878	587	69 28 155 14	10	1
11233402	30	11 28 647 6	154	16	11239010	511	11 23 820 3	92	1
11233404	30	11 28 647 6	155	2	11239082	46	11 24 519 0	111	1
11233487	491	11 89 322 8	1	1	11239085	52	11 23 908 2	11	1
11233727	87	10 22 540 8	1	1	11239378	2	01 38 376 14	63	1
11233729	87	10 22 540 8	3	2	11239595	219	11 24 240 8	3	1
11233730	87	10 22 540 8	4	1	11239698	538	11 24 444 4	37	2
11233731	87	10 22 540 8	5	1	11239740	538	11 24 444 4	22	1
11233731	87	10 22 540 8	6	1	11239880	671	51 16 404 14	2	1
11233731	530	59 20 224 14	2	1	11239880	673	59 21 584 14	2	1
11233732	87	10 22 540 8	7	1	11239895	673	59 21 584 14	3	1
11233742	87	10 22 540 8	9	1	11239897	673	59 21 584 14	4	1
11233749	87	10 22 540 8	10	1	11239904	673	59 21 584 14	5	1
11233751	87	10 22 540 8	11	1	11239908	673	59 21 584 14	7	1
11234068	30	11 28 647 6	275	16	11239912	671	51 16 404 14	1	1
11234129	30	11 28 647 6	285	1	11239915	671	51 16 404 14	3	1
11234375	333	11 24 483 7	57	2	11239916	671	51 16 404 14	4	1
11234405	333	11 24 483 7	58	1	11240479	2	01 38 376 14	5	1
11234413	333	11 24 483 7	59	1	11240480	90	11 26 560 6	10	1
11234650	404	11 27 973 6	150	4	11240499	696	10 53 352 4	3	1
11234799	188	11 24 113 8	15	2	11240503	696	10 53 352 4	1	1
11235246	682	11 89 568 7	2	1	11241005	83	10 51 969 4	22	16
11235248	683	11 23 524 6	2	1	11241137	92	11 24 048 0	4	1
11235361	83	10 51 969 4	11	1	11241138	92	11 24 048 0	12	1
11235382	83	10 51 969 4	21	1	11241139	92	11 24 048 0	20	1
11235482	480	11 31 390 8	35	2	11241140	92	11 24 048 0	28	1
11236106	601	79 04 112 14	19	12	11241141	92	11 24 048 0	29	1
11236106	608	79 05 205 14	19	12	11241142	92	11 24 048 0	30	1
11236108	601	79 04 112 14	20	12	11241143	92	11 24 048 0	40	1
11236108	608	79 05 205 14	20	12	11241144	92	11 24 048 0	50	1
11236114	608	79 05 205 14	16	4	11241145	92	11 24 048 0	60	1
11236197	3	01 38 376 14	644	1	11241146	92	11 24 048 0	90	1
11236233	692	11 23 626 6	11	1	11241269	200	11 28 734 7	12	1
11236266	4	01 38 376 14	680	2	11241323	578	11 24 132 4	10	1

Item	Sheet	Assembly	Pos.	Quantity	Item	Sheet	Assembly	Pos.	Quantity
11241324	3	01 38 376 14	81	1	11247808	333	11 24 483 7	33	1
11241478	3	01 38 376 14	554	1	11247880	207	11 24 114 2	14	1
11241756	45	11 24 519 0	40	1	11247913	461	10 55 119 1	1	4
11242408	217	11 24 114 5	6	1	11248120	2	01 38 376 14	37	1
11242597	481	11 24 812 0	10	4	11248166	211	11 24 114 3	6	1
11242757	217	11 24 114 5	42	1	11248175	211	11 24 114 3	7	1
11242988	4	01 38 376 14	647	1	11248258	593	99 48 521 14	23	1
11244040	333	11 24 483 7	52	2	11248260	594	11 24 825 8	11	1
11244090	90	11 26 560 6	11	1	11248261	594	11 24 825 8	12	1
11244091	313	11 24 409 0	1	1	11248432	211	11 24 114 3	10	1
11244092	317	11 24 409 1	2	1	11248433	211	11 24 114 3	11	1
11244094	313	11 24 409 0	28	1	11248460	211	11 24 114 3	12	1
11244444	536	11 23 937 8	10	1	11248964	313	11 24 409 0	21	1
11244487	92	11 24 048 0	3	1	11248966	313	11 24 409 0	22	1
11244498	315	11 24 409 0	53	1	11248969	313	11 24 409 0	9	2
11244758	313	11 24 409 0	14	1	11248990	313	11 24 409 0	19	2
11244837	90	11 26 560 6	14	1	11248991	313	11 24 409 0	15	2
11244865	313	11 24 409 0	13	1	11248992	313	11 24 409 0	20	2
11245190	18	11 24 047 9	3	1	11249191	86	59 21 041 14	270	1
11245698	549	11 24 570 3	10	1	11249222	90	11 26 560 6	12	1
11245700	567	11 24 570 9	10	1	11249223	331	11 24 922 2	13	1
11245702	574	11 24 571 5	10	1	11249224	331	11 24 922 2	18	1
11245703	548	11 93 749 9	10	1	11249225	331	11 24 922 2	21	1
11245705	2	01 38 376 14	67	1	11249334	193	11 24 113 9	2	1
11245709	566	11 93 750 1	10	1	11249678	331	11 24 922 2	24	1
11245711	2	01 38 376 14	71	1	11249729	212	11 24 114 4	4	1
11245715	573	11 93 750 4	10	1	11249738	212	11 24 114 4	11	2
11245717	2	01 38 376 14	79	4	11249772	449	10 55 097 0	10	3
11245755	635	11 24 147 8	1	2	11249800	188	11 24 113 8	2	2
11245756	636	11 24 575 5	1	1	11249804	450	11 89 617 8	9	1
11245757	636	11 24 575 5	2	2	11249889	188	11 24 113 8	9	2
11245758	636	11 24 575 5	3	1	11250162	3	01 38 376 14	447	1
11245759	635	11 24 147 8	2	2	11250222	188	11 24 113 8	4	2
11245760	636	11 24 575 5	4	4	11250382	195	11 24 114 0	3	1
11245766	635	11 24 147 8	5	2	11250430	202	11 24 114 1	20	1
11245767	635	11 24 147 8	6	2	11250438	202	11 24 114 1	21	1
11245922	635	11 24 147 8	3	2	11250439	202	11 24 114 1	25	1
11246790	207	11 24 114 2	10	1	11250555	195	11 24 114 0	20	1
11246820	94	11 24 773 5	1	1	11250556	195	11 24 114 0	21	1
11246836	207	11 24 114 2	15	1	11250564	195	11 24 114 0	23	1
11246919	333	11 24 483 7	42	1	11250970	424	10 22 441 3	3	1
11247011	333	11 24 483 7	38	1	11250971	425	11 25 097 0	2	1
11247023	335	11 24 483 7	61	1	11250972	98	11 24 682 0	30	1
11247029	333	11 24 483 7	28	1	11250974	98	11 24 682 0	70	3
11247121	45	11 24 519 0	11	1	11250985	205	11 28 574 7	3	1
11247122	184	11 24 448 7	11	1	11250990	98	11 24 682 0	420	4
11247131	335	11 24 483 7	62	1	11250998	98	11 24 682 0	468	8
11247158	333	11 24 483 7	48	1	11251056	202	11 24 114 1	8	1
11247162	207	11 24 114 2	11	1	11251232	486	11 26 260 6	2	1
11247207	333	11 24 483 7	50	1	11251232	501	11 26 261 1	2	1
11247208	207	11 24 114 2	12	1	11251423	450	11 89 617 8	8	2
11247375	333	11 24 483 7	22	1	11251434	450	11 89 617 8	6	1
11247464	211	11 24 114 3	9	1	11251437	450	11 89 617 8	5	1
11247607	211	11 24 114 3	8	1	11252042	593	99 48 521 14	51	2
11247688	188	11 24 113 8	1	1	11252203	311	11 24 114 6	1	1
11247735	92	11 24 048 0	2	1	11252205	311	11 24 114 6	16	1
11247790	676	11 89 568 5	4	1	11252206	311	11 24 114 6	17	1
11247791	333	11 24 483 7	29	1	11252207	311	11 24 114 6	2	1
11247792	333	11 24 483 7	31	9	11252208	311	11 24 114 6	8	1
11247799	333	11 24 483 7	32	2	11252211	311	11 24 114 6	3	1

Item	Sheet	Assembly	Pos.	Quantity	Item	Sheet	Assembly	Pos.	Quantity
11252213	311	11 24 114 6	9	1	11267377	102	11 21 992 7	6	1
11252214	311	11 24 114 6	4	1	11267377	103	11 21 992 9	6	1
11252215	311	11 24 114 6	5	1	11267378	102	11 21 992 7	1	1
11252216	311	11 24 114 6	6	1	11267396	103	11 21 992 9	1	1
11252578	311	11 24 114 6	15	1	11267400	106	11 21 993 0	10	2
11253077	98	11 24 682 0	140	2	11267401	106	11 21 993 0	11	2
11253240	121	90 74 418	900	1	11267402	106	11 21 993 0	20	1
11253394	366	10 58 386 4	1	1	11267403	106	11 21 993 0	28	1
11253398	367	10 55 597 3	1	1	11267405	106	11 21 993 0	46	1
11253401	368	10 58 386 5	1	1	11267415	107	10 59 347 4	1	1
11253440	369	10 58 384 5	1	1	11267416	107	10 59 347 4	6	1
11253456	450	11 89 617 8	7	7	11267417	107	10 59 347 4	7	1
11253687	94	11 24 773 5	2	1	11267418	107	10 59 347 4	9	1
11253689	94	11 24 773 5	26	2	11267418	108	11 21 936 9	8	1
11254299	709	10 56 536 7	1	1	11267421	108	11 21 936 9	1	1
11256217	538	11 24 444 4	19	2	11267439	109	11 06 730 4	1	1
11257246	561	11 93 703 7	11	2	11267440	109	11 06 730 4	2	1
11257849	335	11 24 483 7	72	1	11267441	109	11 06 730 4	4	2
11257851	335	11 24 483 7	75	3	11267442	109	11 06 730 4	5	1
11258086	45	11 24 519 0	41	1	11267447	110	11 06 730 5	1	1
11258244	18	11 24 047 9	990	1	11267451	111	11 26 744 7	1	1
11259039	404	11 27 973 6	206	1	11267453	111	11 26 744 7	3	1
11259704	432	11 93 934 6	200	1	11267455	112	11 21 935 0	10	1
11259705	432	11 93 934 6	210	1	11267554	198	10 57 423 7	9	1
11260077	414	11 26 095 7	24	1	11267555	198	10 57 423 7	10	1
11260806	593	99 48 521 14	44	2	11267556	198	10 57 423 7	11	1
11260956	402	11 27 970 6	17	1	11267557	198	10 57 423 7	12	1
11260957	403	11 27 973 6	20	1	11267558	198	10 57 423 7	13	1
11261002	193	11 24 113 9	5	2	11267559	198	10 57 423 7	26	1
11261289	533	11 29 259 6	1	2	11267560	198	10 57 423 7	29	1
11261603	404	11 27 973 6	202	1	11268711	98	11 24 682 0	610	1
11262110	687	11 89 568 8	11	4	11268816	98	11 24 682 0	380	2
11262605	2	01 38 376 14	41	1	11268967	659	11 26 901 8	10	1
11262606	484	11 26 260 5	2	1	11269018	658	10 55 722 4	11	2
11262609	484	11 26 260 5	4	1	11269259	195	11 24 114 0	19	1
11262610	2	01 38 376 14	45	1	11269498	218	11 24 114 5	126	1
11262611	499	11 26 261 0	2	1	11269727	578	11 24 132 4	110	1
11262612	499	11 26 261 0	4	1	11269800	195	11 24 114 0	9	1
11262806	71	11 26 557 2	10	1	11269954	18	11 24 047 9	4	1
11262812	437	11 26 095 6	2	1	11270026	195	11 24 114 0	44	1
11262861	311	11 24 114 6	12	1	11270155	530	59 20 224 14	3	1
11262893	437	11 26 095 6	1	1	11271097	3	01 38 376 14	580	1
11262894	437	11 26 095 6	3	1	11271098	637	11 27 109 7	10	1
11263413	188	11 24 113 8	16	1	11271491	602	10 50 435 2	1	1
11263492	581	11 28 629 9	6	1	11272671	713	11 31 446 2	2	1
11263501	188	11 24 113 8	17	1	11273155	18	11 24 047 9	23	1
11263757	188	11 24 113 8	18	1	11273242	313	11 24 409 0	17	4
11265089	335	11 24 483 7	65	1	11273458	404	11 27 973 6	212	2
11265111	518	91 92 528 14	11	1	11274557	608	79 05 205 14	9	4
11265425	524	11 26 694 5	12	2	11274624	601	79 04 112 14	2	2
11265497	524	11 26 694 5	11	4	11274636	601	79 04 112 14	16	4
11265572	70	11 27 315 5	11	1	11274638	601	79 04 112 14	21	1
11265606	2	01 38 376 14	6	1	11274675	604	11 27 463 8	2	1
11265945	333	11 24 483 7	35	1	11274707	217	11 24 114 5	17	1
11266734	69	10 51 963 1	12	76	11274708	217	11 24 114 5	18	1
11266901	547	11 24 570 5	110	1	11274798	608	79 05 205 14	2	2
11266901	565	11 24 571 1	110	1	11274800	608	79 05 205 14	6	1
11266901	572	11 24 571 7	110	1	11274801	608	79 05 205 14	22	1
11266945	511	11 23 820 3	110	1	11274829	610	11 27 480 1	1	1
11266978	441	10 51 969 6	14	80	11274831	610	11 27 480 1	2	1

Item	Sheet	Assembly	Pos.	Quantity	Item	Sheet	Assembly	Pos.	Quantity
11274832	610	11 27 480 1	3	1	11287761	200	11 28 734 7	16	1
11275365	525	11 29 259 8	10	1	11287796	195	11 24 114 0	25	1
11275747	510	11 23 820 3	41	1	11288257	720	10 52 155 4	103	1
11276612	202	11 24 114 1	5	1	11289833	685	59 21 826 14	25	1
11276851	2	01 38 376 14	53	1	11290844	98	11 24 682 0	10	1
11278507	585	11 28 357 6	1	1	11290845	98	11 24 682 0	80	1
11278605	626	54 02 702 14	10	1	11290846	98	11 24 682 0	165	2
11279013	217	11 24 114 5	43	1	11290847	98	11 24 682 0	170	1
11279036	217	11 24 114 5	44	1	11290849	98	11 24 682 0	180	1
11279237	217	11 24 114 5	48	1	11290850	98	11 24 682 0	200	2
11279706	2	01 38 376 14	30	1	11290852	98	11 24 682 0	230	1
11279736	402	11 27 970 6	3	1	11290853	98	11 24 682 0	460	1
11280482	70	11 27 315 5	10	2	11290854	98	11 24 682 0	465	1
11280746	637	11 27 109 7	16	1	11290855	98	11 24 682 0	470	2
11280868	65	10 56 073 3	12	1	11290856	98	11 24 682 0	530	1
11281448	426	59 22 871 14	1	1	11290857	98	11 24 682 0	540	1
11283576	583	99 06 461 14	2	1	11291030	209	11 24 679 0	3	1
11283908	549	11 24 570 3	14	1	11291031	209	11 24 679 0	1	1
11283913	552	11 28 390 8	18	8	11292596	525	11 29 259 8	3	1
11283913	568	11 28 583 8	18	9	11292598	2	01 38 376 14	60	1
11283913	575	11 28 626 1	18	9	11292956	457	10 44 510 2	17	1
11283913	578	11 24 132 4	17	12	11293193	457	10 44 510 2	6	1
11283913	650	11 29 473 7	13	4	11293195	457	10 44 510 2	7	1
11283913	654	11 29 474 2	14	10	11293196	457	10 44 510 2	8	1
11283913	655	11 29 474 3	16	14	11293250	38	59 21 458 14	3	2
11283977	549	11 24 570 3	15	1	11293256	20	11 29 618 6	44	4
11283977	567	11 24 570 9	15	1	11293256	191	10 57 532 2	15	1
11283977	574	11 24 571 5	15	1	11294362	98	11 24 682 0	100	1
11283978	549	11 24 570 3	16	1	11294363	98	11 24 682 0	110	4
11283978	567	11 24 570 9	16	1	11294737	3	01 38 376 14	621	1
11283978	574	11 24 571 5	16	1	11294742	3	01 38 376 14	622	1
11283995	549	11 24 570 3	17	1	11294743	3	01 38 376 14	624	4
11283995	567	11 24 570 9	17	1	11296186	18	11 24 047 9	2	1
11283995	574	11 24 571 5	17	1	11297460	693	11 23 623 3	2	1
11283997	549	11 24 570 3	18	1	11297461	693	11 23 623 3	3	1
11283997	567	11 24 570 9	18	1	11298436	559	11 94 087 8	10	2
11283997	574	11 24 571 5	18	1	11299163	211	11 24 114 3	13	1
11285382	553	11 28 391 3	11	1	11299752	469	10 55 716 2	1	1
11285709	205	11 28 574 7	4	1	11300790	685	59 21 826 14	160	1
11285747	202	11 24 114 1	3	1	11301682	35	10 52 459 5	2	10
11285838	567	11 24 570 9	14	1	11301913	30	11 28 647 6	147	1
11285947	2	01 38 376 14	65	1	11305568	380	99 04 645 14	75	16
11286105	578	11 24 132 4	12	1	11305579	380	99 04 645 14	76	16
11286191	2	01 38 376 14	69	1	11305670	650	11 29 473 7	18	1
11286261	574	11 24 571 5	14	1	11305670	654	11 29 474 2	19	1
11286299	578	11 24 132 4	11	1	11305670	655	11 29 474 3	21	1
11286324	515	11 90 150 9	10	1	11306379	693	11 23 623 3	6	1
11286324	579	10 53 141 3	10	1	11306944	650	11 29 473 7	12	2
11286476	20	11 29 618 6	1	1	11306945	651	11 30 694 4	10	1
11286481	20	11 29 618 6	2	2	11308593	211	11 24 114 3	14	1
11286534	2	01 38 376 14	77	4	11308594	211	11 24 114 3	15	1
11287255	549	11 24 570 3	12	1	11309625	402	11 27 970 6	57	1
11287255	567	11 24 570 9	12	2	11309628	440	11 30 962 5	2	1
11287255	574	11 24 571 5	12	4	11310567	529	10 09 917 3	40	1
11287264	549	11 24 570 3	11	4	11310932	18	11 24 047 9	46	1
11287264	567	11 24 570 9	11	4	11310952	552	11 28 390 8	12	2
11287264	574	11 24 571 5	11	4	11310952	568	11 28 583 8	12	2
11287347	195	11 24 114 0	11	1	11310952	575	11 28 626 1	12	2
11287692	195	11 24 114 0	18	1	11310955	552	11 28 390 8	13	2
11287715	195	11 24 114 0	24	1	11310955	568	11 28 583 8	13	2

Item	Sheet	Assembly	Pos.	Quantity	Item	Sheet	Assembly	Pos.	Quantity
11310955	575	11 28 626 1	13	2	11448000	246	11 44 800 5	2	2
11311241	552	11 28 390 8	10	1	11448005	245	10 14 843 8	1	1
11311241	568	11 28 583 8	10	1	11461533	45	11 24 519 0	42	1
11311241	575	11 28 626 1	10	1	11481158	601	79 04 112 14	5	1
11311245	552	11 28 390 8	15	2	11481159	601	79 04 112 14	6	1
11311245	568	11 28 583 8	15	1	11481162	604	11 27 463 8	1	1
11311245	575	11 28 626 1	14	1	11482007	217	11 24 114 5	25	4
11311262	552	11 28 390 8	11	1	11482412	280	10 14 286 0	7	1
11311336	568	11 28 583 8	11	1	11490216	150	10 14 360 7	34	2
11311371	568	11 28 583 8	20	1	11490265	106	11 21 993 0	38	1
11311371	575	11 28 626 1	15	1	11490265	106	11 21 993 0	39	1
11311390	575	11 28 626 1	20	1	11490265	106	11 21 993 0	40	1
11311393	575	11 28 626 1	11	1	11491267	608	79 05 205 14	5	1
11312502	602	10 50 435 2	4	1	11493575	601	79 04 112 14	4	1
11313908	443	11 89 364 8	12	1	11493578	601	79 04 112 14	14	2
11314134	655	11 29 474 3	10	1	11600199	8	11 92 958 8	38	1
11314166	430	11 94 091 0	2	1	11600281	109	11 06 730 4	3	1
11314341	543	11 23 749 8	12	3	11600879	262	10 15 315 1	4	1
11314341	562	11 23 290 7	13	3	11600879	263	10 14 114 0	3	1
11314341	563	11 23 292 2	17	6	11600879	266	10 13 543 4	3	1
11314341	597	11 25 204 2	15	4	11621764	8	11 92 958 8	15	0.5
11314349	543	11 23 749 8	11	3	11621764	218	11 24 114 5	65	9
11314349	562	11 23 290 7	14	3	11621769	195	11 24 114 0	49	1
11314349	563	11 23 292 2	14	6	11621769	195	11 24 114 0	50	1
11314349	597	11 25 204 2	14	4	11621769	212	11 24 114 4	5	0.5
11314462	4	01 38 376 14	854	1	11621769	217	11 24 114 5	61	1
11314463	713	11 31 446 2	10	1	11621772	195	11 24 114 0	51	1
11314473	539	10 53 120 7	50	1	11621772	217	11 24 114 5	60	1
11348054	242	11 34 807 2	1	1	11621777	195	11 24 114 0	48	1
11348072	223	12 42 545 4	60	6	11622278	262	10 15 315 1	3	1
11349182	217	11 24 114 5	8	2	11622278	266	10 13 543 4	2	1
11351303	243	10 14 636 7	3	1	11645490	403	11 27 973 6	76	1
11354498	283	10 14 273 4	1	1	11651481	30	11 28 647 6	120	4
11357451	282	11 44 013 4	1	1	11656240	274	10 14 736 9	6	1
11357453	282	11 44 013 4	2	1	11656331	195	11 24 114 0	47	1
11362187	139	10 12 878 7	4	1	11690424	293	10 14 511 2	10	1
11368896	220	10 14 653 8	6	1	11694640	264	10 13 508 0	9	1
11373478	217	11 24 114 5	3	1	11696074	215	10 30 300 7	16	1
11376327	225	12 42 545 4	582	1	11699714	336	10 59 256 9	280	1
11381601	293	10 14 511 2	20	1	11821872	217	11 24 114 5	38	1
11386645	296	10 12 037 2	1	1	11823326	217	11 24 114 5	39	2
11389287	271	10 14 382 8	3	2	11833770	235	10 15 529 8	3	2
11389617	223	12 42 545 4	10	1	11833907	220	10 14 653 8	19	1
11403695	309	11 40 371 1	20	1	11835950	30	11 28 647 6	181	4
11403711	308	11 90 032 5	3	1	11835951	30	11 28 647 6	182	12
11403994	261	10 15 286 7	2	1	11837214	8	11 92 958 8	6	1
11403994	265	10 13 543 2	1	1	11837331	8	11 92 958 8	8	1
11404751	276	10 14 967 6	3	1	11890132	718	11 31 446 3	1	1
11410004	14	11 41 475 7	5	1	11890133	718	11 31 446 3	2	1
11414757	11	11 92 891 3	4	1	11890145	469	10 55 716 2	2	2
11414758	11	11 92 891 3	5	1	11890636	666	11 23 619 7	16	1
11414759	14	11 41 475 7	2	1	11892804	705	11 93 621 2	18	1
11414767	14	11 41 475 7	1	1	11893001	443	11 89 364 8	4	1
11415782	273	10 14 736 6	1	1	11893003	443	11 89 364 8	2	1
11417369	12	11 41 737 0	1	1	11893005	444	11 89 300 3	2	1
11417370	11	11 92 891 3	3	1	11893213	489	10 53 039 8	1	1
11425228	305	10 15 028 8	8	1	11893214	489	10 53 039 8	4	1
11440134	281	10 14 611 7	1	1	11893215	489	10 53 039 8	5	1
11443132	269	10 14 333 9	11	2	11893216	489	10 53 039 8	6	1
11444998	274	10 14 736 9	1	1	11893228	490	11 89 321 3	1	1

Item	Sheet	Assembly	Pos.	Quantity	Item	Sheet	Assembly	Pos.	Quantity
11893250	491	11 89 322 8	2	1	11925182	217	11 24 114 5	63	1
11893252	491	11 89 322 8	4	1	11926905	217	11 24 114 5	28	1
11893253	494	11 89 321 4	1	1	11926906	8	11 92 958 8	26	1
11893254	495	11 89 321 5	1	1	11926906	217	11 24 114 5	26	5
11893255	496	11 89 321 6	1	1	11928908	648	10 55 601 1	1	2
11893352	694	11 89 400 8	3	1	11928913	5	11 93 045 7	5	1
11893648	2	01 38 376 14	33	1	11929287	5	11 93 045 7	21	1
11893650	443	11 89 364 8	10	1	11929329	5	11 93 045 7	20	1
11893651	443	11 89 364 8	11	1	11929423	8	11 92 958 8	20	1
11893687	478	11 89 365 1	1	1	11929588	5	11 93 045 7	3	1
11893689	467	11 89 365 0	1	1	11929596	8	11 92 958 8	21	1
11894008	4	01 38 376 14	704	1	11929821	8	11 92 958 8	2	1
11894080	676	11 89 568 5	2	1	11930190	8	11 92 958 8	11	1
11894083	677	11 89 408 0	2	1	11930281	8	11 92 958 8	22	1
11895491	713	11 31 446 2	4	1	11930457	2	01 38 376 14	4	1
11895685	675	11 24 298 8	10	1	11930759	8	11 92 958 8	23	1
11895686	676	11 89 568 5	10	1	11930769	8	11 92 958 8	50	1
11895687	675	11 24 298 8	11	1	11930987	5	11 93 045 7	1	1
11895688	682	11 89 568 7	10	1	11931909	8	11 92 958 8	24	1
11896178	449	10 55 097 0	900	1	11931926	5	11 93 045 7	60	1
11898219	2	01 38 376 14	52	1	11931930	15	11 93 192 6	100	1
11900325	92	11 24 048 0	70	1	11931931	15	11 93 192 6	110	1
11900503	711	10 52 293 0	9	1	11931932	15	11 93 192 6	120	1
11901509	508	11 23 820 3	3	1	11932236	203	10 57 423 9	12	4
11901511	515	11 90 150 9	21	1	11932237	203	10 57 423 9	11	1
11903519	707	11 23 671 4	1	4	11932238	203	10 57 423 9	10	16
11903869	709	10 56 536 7	3	1	11932239	203	10 57 423 9	9	4
11903905	388	51 22 991 14	5	1	11932240	203	10 57 423 9	8	4
11904703	686	59 21 826 14	900	1	11932241	203	10 57 423 9	7	12
11907226	3	01 38 376 14	438	1	11932242	203	10 57 423 9	6	1
11909480	432	11 93 934 6	100	1	11932243	203	10 57 423 9	4	1
11909482	432	11 93 934 6	120	1	11932244	203	10 57 423 9	3	1
11909483	432	11 93 934 6	130	1	11932245	203	10 57 423 9	2	1
11909496	432	11 93 934 6	140	1	11932246	203	10 57 423 9	1	1
11909497	432	11 93 934 6	150	1	11932850	40	51 16 576 14	1	1
11909498	432	11 93 934 6	160	1	11932853	40	51 16 576 14	2	1
11909669	86	59 21 041 14	2	1	11933792	417	11 95 272 6	10	1
11910323	529	10 09 917 3	100	1	11934415	641	99 23 405 14	4	4
11910324	529	10 09 917 3	180	2	11934656	30	11 28 647 6	125	4
11910325	529	10 09 917 3	190	1	11936212	4	01 38 376 14	724	1
11910327	529	10 09 917 3	110	1	11937020	566	11 93 750 1	13	2
11910328	529	10 09 917 3	111	1	11937020	573	11 93 750 4	13	4
11910892	315	11 24 409 0	42	6	11937037	548	11 93 749 9	13	2
11912031	404	11 27 973 6	205	1	11937499	547	11 24 570 5	10	1
11913115	110	11 06 730 5	2	1	11937501	565	11 24 571 1	10	1
11913116	110	11 06 730 5	3	1	11937504	572	11 24 571 7	10	1
11913123	111	11 26 744 7	2	1	11938016	442	99 18 041 14	11	2
11913226	581	11 28 629 9	64	4	11938600	34	10 35 148 6	2	3
11918670	321	10 57 883 5	13	4	11939346	430	11 94 091 0	1	1
11918670	323	10 57 897 6	11	4.1	11940146	388	51 22 991 14	4	1
11918670	325	10 57 940 0	13	2.6	11940147	388	51 22 991 14	6	1
11918670	326	10 56 623 7	13	1.35	11940176	389	70 23 828	1	1
11918670	327	10 56 580 8	11	2.8	11940177	389	70 23 828	2	1
11918725	446	11 89 300 5	25	2	11940182	390	11 94 017 6	3	1
11918996	86	59 21 041 14	90	1	11940198	390	11 94 017 6	4	7
11918997	86	59 21 041 14	181	2	11940199	390	11 94 017 6	7	1
11921102	61	10 52 673 3	17	1	11940203	390	11 94 017 6	12	7
11922544	218	11 24 114 5	121	10	11940205	391	11 94 017 7	2	1
11922654	203	10 57 423 9	13	1	11940207	391	11 94 017 7	11	1
11922682	217	11 24 114 5	64	5	11940208	392	10 65 027 0	1	1

Item	Sheet	Assembly	Pos.	Quantity	Item	Sheet	Assembly	Pos.	Quantity
11940876	548	11 93 749 9	11	1	226017802	567	11 24 570 9	13	1.132
11940876	566	11 93 750 1	11	1	226017802	574	11 24 571 5	13	1.132
11940876	573	11 93 750 4	11	1	240217402	127	90 77 464	22	6
11940878	558	11 94 087 6	10	1	247000902	8	11 92 958 8	31	1
11940910	420	10 35 008 0	124	1	247000902	217	11 24 114 5	11	4
11942040	475	10 50 179 5	2	1	247001802	668	10 51 973 8	613	2
11942312	535	11 27 536 5	24	4	247009202	24	11 29 618 6	649	6
11942341	535	11 27 536 5	21	2	247009202	95	11 24 773 5	606	2
11942798	77	10 58 163 4	42	1	247009202	448	11 89 300 5	644	1
11944129	188	11 24 113 8	30	4	247009202	513	10 51 826 1	611	2
11946386	511	11 23 820 3	98	3	247009402	26	11 29 618 6	724	10
11946423	432	11 93 934 6	380	1	247009402	85	10 51 969 5	609	1
11946424	432	11 93 934 6	390	1	247009402	95	11 24 773 5	605	4
11946451	432	11 93 934 6	280	1	247009402	345	10 51 969 8	606	1
11946452	432	11 93 934 6	220	1	247009402	362	10 51 968 7	610	1
11946453	432	11 93 934 6	290	1	247009402	385	10 55 216 1	605	2
11946454	432	11 93 934 6	300	1	247009402	715	10 56 173 5	706	2
11946455	432	11 93 934 6	310	1	247009702	22	11 29 618 6	612	13
11946456	432	11 93 934 6	320	1	247009702	85	10 51 969 5	608	1
11946457	432	11 93 934 6	330	1	247009702	95	11 24 773 5	602	10
11946458	432	11 93 934 6	340	1	247009702	212	11 24 114 4	21	1
11946459	432	11 93 934 6	350	1	247009702	385	10 55 216 1	604	1
11946462	432	11 93 934 6	360	1	247009702	446	11 89 300 5	603	4
11946464	432	11 93 934 6	370	1	247009702	486	11 26 260 6	711	1
11947719	333	11 24 483 7	27	2	247009702	501	11 26 261 1	711	1
11949153	559	11 94 087 8	15	2	247009702	513	10 51 826 1	610	3
11949153	640	99 10 116 14	37	2	247009702	620	10 51 726 2	604	1
11949153	642	99 10 125 14	3	1	247009702	678	11 89 408 3	701	1
11949153	644	99 06 789 14	3	1	247009902	24	11 29 618 6	675	5
11949368	505	10 56 183 8	80	1	247009902	95	11 24 773 5	610	7
11950210	380	99 04 645 14	50	1	247009902	446	11 89 300 5	601	6
11950212	380	99 04 645 14	53	1	247010102	22	11 29 618 6	611	4
11951869	219	11 24 240 8	7	1	247010102	95	11 24 773 5	604	4
11952726	404	11 27 973 6	83	1	247010102	513	10 51 826 1	609	2
11953398	709	10 56 536 7	2	1	247011602	22	11 29 618 6	610	1
12207546	305	10 15 028 8	52	2	247011602	95	11 24 773 5	307	1
12207547	294	10 14 622 4	15	2	247011602	212	11 24 114 4	22	1
12401396	258	10 15 085 7	230	1	247011602	446	11 89 300 5	613	2
12403954	305	10 15 028 8	1	1	247011602	513	10 51 826 1	603	1
12409205	217	11 24 114 5	62	1	247020902	24	11 29 618 6	654	3
12425454	92	11 24 048 0	66	1	247020902	95	11 24 773 5	316	1
12425589	225	12 42 545 4	570	1	247027002	26	11 29 618 6	716	1
12427052	6	11 93 098 7	2	1	247027202	22	11 29 618 6	609	1
12428325	276	10 14 967 6	10	1	247027302	26	11 29 618 6	718	2
12433536	217	11 24 114 5	4	1	247027302	217	11 24 114 5	32	2
12455374	268	10 14 675 3	1	1	247027302	446	11 89 300 5	602	4
12476138	243	10 14 636 7	4	1	247027402	513	10 51 826 1	606	1
226016702	331	11 24 922 2	29	2.18	247040302	24	11 29 618 6	680	1
226016702	331	11 24 922 2	30	1.11	247040302	345	10 51 969 8	605	1
226016702	331	11 24 922 2	31	1.19	247040902	26	11 29 618 6	739	2
226016702	331	11 24 922 2	33	1.24	247040902	217	11 24 114 5	34	2
226016702	331	11 24 922 2	34	1.29	247041102	8	11 92 958 8	39	1
226016702	331	11 24 922 2	35	0.57	247041102	22	11 29 618 6	203	1
226016702	331	11 24 922 2	36	0.85	247041102	95	11 24 773 5	608	3
226016702	331	11 24 922 2	37	1.2	247041102	446	11 89 300 5	608	4
226016702	331	11 24 922 2	39	0.36	247041402	95	11 24 773 5	607	3
226016702	331	11 24 922 2	40	0.35	247041502	26	11 29 618 6	749	2
226016702	518	91 92 528 14	22	0.45	247041502	217	11 24 114 5	30	2
226017802	511	11 23 820 3	76	4	247042402	24	11 29 618 6	681	4
226017802	549	11 24 570 3	13	1.132	247042402	446	11 89 300 5	611	6

Item	Sheet	Assembly	Pos.	Quantity	Item	Sheet	Assembly	Pos.	Quantity
247042402	668	10 51 973 8	605	1	247128502	446	11 89 300 5	605	4
247042402	702	10 51 728 1	607	1	247128502	620	10 51 726 2	614	1
247042502	26	11 29 618 6	746	2	247128602	24	11 29 618 6	653	4
247042702	22	11 29 618 6	607	1	247128602	95	11 24 773 5	625	1
247042702	513	10 51 826 1	605	2	247128602	217	11 24 114 5	16	1
247043102	22	11 29 618 6	606	2	247128602	362	10 51 968 7	605	1
247043102	95	11 24 773 5	614	2	247128602	385	10 55 216 1	602	1
247043102	212	11 24 114 4	23	2	247128602	448	11 89 300 5	648	2
247043202	85	10 51 969 5	615	2	247138602	26	11 29 618 6	729	3
247043502	95	11 24 773 5	613	2	247138602	96	11 24 773 5	692	1
247044302	95	11 24 773 5	652	2	247138602	217	11 24 114 5	19	2
247048802	22	11 29 618 6	625	6	247138602	446	11 89 300 5	609	4
247048802	513	10 51 826 1	215	2	247142002	95	11 24 773 5	653	2
247049002	22	11 29 618 6	618	1	247232702	24	11 29 618 6	660	2
247049002	217	11 24 114 5	33	2	247242302	22	11 29 618 6	629	11
247049002	446	11 89 300 5	22	1	247242302	95	11 24 773 5	317	1
247049102	22	11 29 618 6	627	2	247242302	448	11 89 300 5	638	2
247049102	95	11 24 773 5	617	1	247261802	26	11 29 618 6	708	3
247049102	513	10 51 826 1	204	2	247261802	95	11 24 773 5	621	1
247049202	22	11 29 618 6	631	1	260318602	516	11 90 151 1	41	10.5
247091002	94	11 24 773 5	302	1	260493402	595	97 14 959 03	33	1
247105602	26	11 29 618 6	732	1	260493702	516	11 90 151 1	46	1
247108302	26	11 29 618 6	734	4	260514602	411	10 53 171 8	25	7
247108302	95	11 24 773 5	612	8	262103101	546	10 35 063 3	16	0.16
247108302	212	11 24 114 4	24	4	262105314	319	11 24 409 1	14	9
247108302	448	11 89 300 5	641	1	262105314	321	10 57 883 5	2	1.1
247112702	22	11 29 618 6	624	9	262107814	79	10 56 067 3	24	6
247112702	85	10 51 969 5	202	2	289031614	486	11 26 260 6	13	1
247112702	95	11 24 773 5	686	4	289031614	501	11 26 261 1	13	1
247112702	385	10 55 216 1	603	2	289035314	545	99 29 588 14	10	1
247112702	513	10 51 826 1	201	2	289057714	510	11 23 820 3	55	1
247112702	661	10 51 971 2	706	2	289057714	558	11 94 087 6	11	1
247116402	22	11 29 618 6	605	3	289058614	79	10 56 067 3	5	0.016
247116402	513	10 51 826 1	607	3	289058614	79	10 56 067 3	8	0.08
247117302	26	11 29 618 6	752	15	289058614	79	10 56 067 3	9	0.023
247117302	85	10 51 969 5	616	1	289059414	443	11 89 364 8	13	1
247117302	95	11 24 773 5	628	1	289064214	361	10 51 968 6	24	4
247117302	385	10 55 216 1	600	4	319719401	350	93 88 500 01	30	5
247117302	661	10 51 971 2	707	2	385031714	618	10 51 743 9	15	2
247117302	668	10 51 973 8	203	1	385037314	581	11 28 629 9	14	2
247117302	678	11 89 408 3	705	2	385072014	77	10 58 163 4	65	2
247117702	26	11 29 618 6	704	9	385094414	411	10 53 171 8	5	1
247117702	95	11 24 773 5	308	1	385123814	370	99 29 258 14	13	2
247117702	195	11 24 114 0	35	1	385137114	699	10 58 064 7	13	1
247117702	217	11 24 114 5	10	1	385151114	370	99 29 258 14	6	1
247117702	385	10 55 216 1	204	4	385204714	321	10 57 883 5	5	2
247117702	448	11 89 300 5	632	1	385204714	323	10 57 897 6	5	2
247121102	26	11 29 618 6	727	1	385204714	325	10 57 940 0	8	2
247126202	8	11 92 958 8	37	1	385204714	326	10 56 623 7	8	2
247126202	26	11 29 618 6	735	5	385204714	327	10 56 580 8	5	2
247126202	95	11 24 773 5	641	5	385255314	681	11 89 568 6	15	4
247126202	217	11 24 114 5	35	2	385255414	681	11 89 568 6	16	4
247126202	446	11 89 300 5	610	3	385255514	681	11 89 568 6	17	4
247128402	22	11 29 618 6	626	8	388283108	591	99 30 800 14	18	1
247128402	95	11 24 773 5	627	6	388283208	591	99 30 800 14	19	1
247128402	385	10 55 216 1	608	4	388291208	467	11 89 365 0	16	72
247128402	661	10 51 971 2	708	2	388291208	478	11 89 365 1	16	72
247128402	715	10 56 173 5	701	1	4000383	483	99 26 718 14	19	4
247128502	26	11 29 618 6	731	2	4000648	195	11 24 114 0	70	9
247128502	345	10 51 969 8	604	1	4000784	396	90 01 376 2	26	8

Item	Sheet	Assembly	Pos.	Quantity	Item	Sheet	Assembly	Pos.	Quantity
4000870	396	90 01 376 2	21	5	4043124	94	11 24 773 5	60	4
4000898	98	11 24 682 0	480	9	4043124	471	96 93 178 01	17	12
400093303	471	96 93 178 01	39	3	4043133	94	11 24 773 5	53	4
4001205	375	99 29 388 14	3	7	404313401	20	11 29 618 6	58	4
4001246	20	11 29 618 6	55	16	4043163	115	10 11 834 9	21	8
4001246	94	11 24 773 5	52	4	404333614	94	11 24 773 5	61	12
4001246	385	10 55 216 1	6	16	404403114	402	11 27 970 6	21	1
4001246	528	10 51 959 1	670	4	404601014	616	11 21 552 4	15	3
4001246	668	10 51 973 8	616	4	406144514	341	99 29 803 14	20	6
4001266	725	10 52 155 9	42	2	406154014	467	11 89 365 0	30	45
4001622	193	11 24 113 9	61	12	406154014	478	11 89 365 1	30	45
4001622	258	10 15 085 7	2	4	4062002	22	11 29 618 6	64	16
4001622	259	10 15 074 3	2	4	4062009	192	10 58 017 0	61	4
4001622	581	11 28 629 9	65	4	406501314	71	11 26 557 2	12	2
4001664	226	11 38 961 7	3	11	406501314	77	10 58 163 4	28	2
400180214	402	11 27 970 6	35	8	406501314	188	11 24 113 8	66	2
400180214	411	10 53 171 8	30	4	406501314	195	11 24 114 0	63	8
400180314	402	11 27 970 6	36	15	406501314	202	11 24 114 1	61	6
4001967	402	11 27 970 6	24	2	406501314	218	11 24 114 5	82	4
4001967	681	11 89 568 6	31	24	406501314	335	11 24 483 7	96	10
4002195	189	10 51 948 1	61	4	406501314	483	99 26 718 14	20	4
4002195	668	10 51 973 8	301	2	406501314	510	11 23 820 3	21	10
4002229	156	10 13 803 2	44	1	406501314	593	99 48 521 14	34	4
4002401	437	11 26 095 6	5	4	406501314	618	10 51 743 9	21	6
4002442	471	96 93 178 01	82	12	406501314	640	99 10 116 14	32	2
4002442	668	10 51 973 8	303	2	406501314	647	10 55 601 0	18	2
4002551	373	99 29 389 14	6	4	406501414	8	11 92 958 8	61	4
4002551	374	99 29 392 14	6	4	406501414	188	11 24 113 8	65	8
4002655	335	11 24 483 7	92	10	406501414	202	11 24 114 1	60	4
4002871	402	11 27 970 6	34	24	406501414	205	11 28 574 7	60	2
402600114	315	11 24 409 0	62	1	406501414	207	11 24 114 2	60	4
402600314	640	99 10 116 14	34	2	406501414	218	11 24 114 5	78	1
402600514	341	99 29 803 14	10	6	406501414	313	11 24 409 0	35	11
4038502	235	10 15 529 8	13	3	406501414	335	11 24 483 7	95	2
403900101	627	54 02 703 14	80	1	406501414	343	10 51 969 7	15	2
403900101	681	11 89 568 6	43	4	406501414	402	11 27 970 6	26	19
403900501	153	10 14 131 6	22	1	406501414	480	11 31 390 8	11	6
403900714	60	10 56 070 1	17	4	406501414	510	11 23 820 3	69	11
403900714	65	10 56 073 3	16	1	406501414	552	11 28 390 8	25	1
403900714	191	10 57 532 2	33	2	406501414	568	11 28 583 8	25	1
403900714	195	11 24 114 0	41	1	406501414	575	11 28 626 1	25	1
404101608	626	54 02 702 14	30	2	406501414	618	10 51 743 9	22	4
404203514	528	10 51 959 1	13	4	406501414	633	10 55 372 1	45	40
404206414	402	11 27 970 6	31	12	406501414	699	10 58 064 7	33	2
404206614	704	11 22 037 2	8	4	406501514	75	92 65 477 14	11	2
404208514	98	11 24 682 0	430	58	406501514	77	10 58 163 4	66	6
404208514	388	51 22 991 14	7	6	406501514	195	11 24 114 0	59	6
404208814	350	93 88 500 01	19	6	406501514	382	10 51 968 2	18	6
404208814	626	54 02 702 14	21	8	406501514	402	11 27 970 6	39	14
404214114	80	11 31 093 2	10	4	406501514	440	11 30 962 5	3	2
404250914	302	10 12 797 9	3	1	406501514	681	11 89 568 6	32	4
404250914	627	54 02 703 14	51	3	406501514	700	10 57 848 6	6	1
404251014	195	11 24 114 0	60	3	406501614	582	11 28 610 5	10	4
404251014	511	11 23 820 3	91	4	406501714	218	11 24 114 5	79	5
404251414	195	11 24 114 0	61	6	406501714	402	11 27 970 6	22	5
4043003	361	10 51 968 6	30	8	406501714	439	10 53 756 0	4	8
4043014	668	10 51 973 8	300	2	406501714	699	10 58 064 7	18	3
404302914	345	10 51 969 8	6	1	406501814	79	10 56 067 3	22	2
404302914	362	10 51 968 7	7	4	406501814	510	11 23 820 3	62	8
4043082	292	10 14 013 6	14	2	406508014	510	11 23 820 3	61	3

Item	Sheet	Assembly	Pos.	Quantity	Item	Sheet	Assembly	Pos.	Quantity
406508014	633	10 55 372 1	46	2	406517314	637	11 27 109 7	20	2
406509314	8	11 92 958 8	64	1	406517614	202	11 24 114 1	62	4
406509314	195	11 24 114 0	67	6	406517614	335	11 24 483 7	97	2
406509314	202	11 24 114 1	64	2	406517614	649	10 55 280 7	14	4
406509314	311	11 24 114 6	63	2	406517614	720	10 52 155 4	13	2
406509314	329	10 54 591 0	17	12	406517714	77	10 58 163 4	21	2
406509314	335	11 24 483 7	81	23	406517714	202	11 24 114 1	65	2
406509314	511	11 23 820 3	87	16	406517714	341	99 29 803 14	23	12
406509314	554	11 28 397 7	14	2	406517914	188	11 24 113 8	56	4
406509314	555	11 28 397 8	14	2	406517914	467	11 89 365 0	24	7
406509314	556	11 28 399 5	14	4	406517914	478	11 89 365 1	24	7
406509314	557	11 28 399 7	14	4	406517914	538	11 24 444 4	14	8
406509314	711	10 52 293 0	12	4	406517914	590	99 23 398 14	28	8
406511214	218	11 24 114 5	88	6	406518414	218	11 24 114 5	89	1
406511414	188	11 24 113 8	67	8	406518414	510	11 23 820 3	18	4
406511414	189	10 51 948 1	60	6	406518514	211	11 24 114 3	63	3
406511414	361	10 51 968 6	22	3	406518514	218	11 24 114 5	80	10
406511414	510	11 23 820 3	49	2	406518614	313	11 24 409 0	24	5
406511614	8	11 92 958 8	63	6	406518614	329	10 54 591 0	21	2
406511614	57	10 51 961 6	18	2	406518614	640	99 10 116 14	47	8
406511614	188	11 24 113 8	53	2	406518714	57	10 51 961 6	17	8
406511614	195	11 24 114 0	66	8	406518714	77	10 58 163 4	56	4
406511614	211	11 24 114 3	60	14	406518714	79	10 56 067 3	16	4
406511614	311	11 24 114 6	60	4	406518714	207	11 24 114 2	61	2
406511614	313	11 24 409 0	31	28	406518714	311	11 24 114 6	62	10
406511614	335	11 24 483 7	80	46	406518714	402	11 27 970 6	25	14
406511614	340	10 52 656 0	13	16	406518714	510	11 23 820 3	17	2
406511614	511	11 23 820 3	94	2	406518714	541	99 14 137 14	3	3
406511914	60	10 56 070 1	60	12	406518714	593	99 48 521 14	16	8
406511914	191	10 57 532 2	60	6	406518814	188	11 24 113 8	54	4
406511914	193	11 24 113 9	60	1	406518814	218	11 24 114 5	81	4
406511914	195	11 24 114 0	65	16	406518814	335	11 24 483 7	94	8
406511914	202	11 24 114 1	63	8	406518814	535	11 27 536 5	23	4
406511914	218	11 24 114 5	87	2	406518814	699	10 58 064 7	20	6
406511914	311	11 24 114 6	61	40	406518814	711	10 52 293 0	14	3
406511914	313	11 24 409 0	23	35	406519214	211	11 24 114 3	62	4
406511914	335	11 24 483 7	79	24	406527314	188	11 24 113 8	64	2
406511914	357	96 96 543 01	26	2	406527314	581	11 28 629 9	29	8
406511914	510	11 23 820 3	30	2	406527314	582	11 28 610 5	11	4
406511914	618	10 51 743 9	19	12	406527414	57	10 51 961 6	16	8
406512014	57	10 51 961 6	19	2	406527414	81	10 56 069 4	3	8
406512014	315	11 24 409 0	54	31	406527414	188	11 24 113 8	57	16
406512014	329	10 54 591 0	19	8	406527614	77	10 58 163 4	35	4
406512014	335	11 24 483 7	83	1	406527714	637	11 27 109 7	13	2
406512014	651	11 30 694 4	14	3	406527814	8	11 92 958 8	65	4
406512114	545	99 29 588 14	14	2	406527814	315	11 24 409 0	45	4
406512614	202	11 24 114 1	66	1	406527814	335	11 24 483 7	82	8
406512614	559	11 94 087 8	16	4	406527814	541	99 14 137 14	4	3
406517314	60	10 56 070 1	62	12	406527814	647	10 55 601 0	15	4
406517314	335	11 24 483 7	73	3	406527914	68	10 55 268 1	3	1
406517314	357	96 96 543 01	51	4	406527914	195	11 24 114 0	68	4
406517314	370	99 29 258 14	2	8	406527914	546	10 35 063 3	14	2
406517314	442	99 18 041 14	15	2	406527914	633	10 55 372 1	38	16
406517314	467	11 89 365 0	18	152	406528014	439	10 53 756 0	5	2
406517314	478	11 89 365 1	18	152	406532614	335	11 24 483 7	68	1
406517314	480	11 31 390 8	22	16	406532614	497	11 22 050 0	13	3
406517314	497	11 22 050 0	16	4	406532614	503	11 22 050 1	13	3
406517314	503	11 22 050 1	16	4	406532614	510	11 23 820 3	60	24
406517314	510	11 23 820 3	16	4	406532614	521	10 58 193 7	13	18
406517314	593	99 48 521 14	15	2	406532614	538	11 24 444 4	30	8

Item	Sheet	Assembly	Pos.	Quantity	Item	Sheet	Assembly	Pos.	Quantity
406532614	618	10 51 743 9	24	2	411515014	188	11 24 113 8	83	4
406532614	649	10 55 280 7	22	2	411515014	315	11 24 409 0	57	7
406532614	657	10 55 514 8	20	2	411515014	329	10 54 591 0	15	26
406532614	659	11 26 901 8	17	2	411515014	402	11 27 970 6	38	4
406532614	699	10 58 064 7	21	3	411515014	633	10 55 372 1	61	2
406532614	711	10 52 293 0	4	4	411515014	636	11 24 575 5	15	4
406532914	335	11 24 483 7	98	1	411515014	720	10 52 155 4	15	2
406532914	521	10 58 193 7	18	2	411516914	188	11 24 113 8	85	8
406532914	581	11 28 629 9	27	4	411516914	480	11 31 390 8	25	8
406532914	653	11 30 567 0	61	1	411516914	593	99 48 521 14	43	2
406550714	331	11 24 922 2	27	84	411516914	637	11 27 109 7	21	2
406551114	335	11 24 483 7	69	2	411517114	402	11 27 970 6	56	2
4066093	192	10 58 017 0	64	8	411517114	439	10 53 756 0	6	4
4066098	22	11 29 618 6	67	48	411517114	480	11 31 390 8	32	8
4066098	94	11 24 773 5	59	12	411517114	614	11 22 322 6	4	4
4066098	192	10 58 017 0	63	12	411517114	633	10 55 372 1	47	10
4066122	22	11 29 618 6	65	8	411517114	659	11 26 901 8	23	2
4066122	192	10 58 017 0	65	6	411551114	218	11 24 114 5	100	2
4066124	94	11 24 773 5	56	12	411551114	681	11 89 568 6	50	9
4068017	65	10 56 073 3	60	6	411551214	438	97 07 857 03	2	9
407003014	8	11 92 958 8	66	3	411551214	725	10 52 155 9	43	2
407041214	438	97 07 857 03	3	3	411880614	211	11 24 114 3	83	4
407071114	440	11 30 962 5	4	4	411901114	47	10 53 048 9	8	1
407203008	191	10 57 532 2	65	4	411901114	189	10 51 948 1	80	4
4072083	60	10 56 070 1	61	32	412705014	441	10 51 969 6	12	80
407350208	247	10 13 475 1	4	1	413003208	704	11 22 037 2	9	2
407350208	248	10 12 653 5	6	1	413003308	311	11 24 114 6	80	32
407350208	250	10 13 469 6	5	1	413003308	331	11 24 922 2	38	18
407350208	270	10 14 588 5	22	1	413003508	311	11 24 114 6	82	10
407350208	294	10 14 622 4	16	8	413003508	315	11 24 409 0	58	4
407350208	305	10 15 028 8	54	5	413004408	311	11 24 114 6	81	8
4079160	14	11 41 475 7	7	1	413004408	329	10 54 591 0	13	24
4079160	270	10 14 588 5	5	7	420000314	438	97 07 857 03	4	3
4079160	294	10 14 622 4	8	1	420000414	8	11 92 958 8	70	4
4079240	270	10 14 588 5	17	1	420000414	51	10 56 645 8	60	4
408301208	418	11 22 369 1	7	8	420000414	218	11 24 114 5	91	29
408600708	335	11 24 483 7	99	2	420000414	315	11 24 409 0	44	10
408600708	418	11 22 369 1	6	8	420000414	402	11 27 970 6	23	14
408600708	704	11 22 037 2	6	1	420000414	439	10 53 756 0	7	8
408600808	335	11 24 483 7	91	2	420000414	467	11 89 365 0	50	6
408601008	521	10 58 193 7	16	4	420000414	478	11 89 365 1	50	6
408601008	636	11 24 575 5	13	8	420000414	480	11 31 390 8	30	24
408606214	402	11 27 970 6	37	4	420000414	497	11 22 050 0	12	3
408606214	700	10 57 848 6	5	2	420000414	503	11 22 050 1	12	3
408606314	631	10 55 372 1	33	24	420000414	510	11 23 820 3	64	56
408606414	335	11 24 483 7	90	14	420000414	521	10 58 193 7	12	36
408606414	653	11 30 567 0	60	1	420000414	538	11 24 444 4	29	18
409710601	471	96 93 178 01	67	3	420000414	554	11 28 397 7	17	1
4097529	396	90 01 376 2	79	1	420000414	555	11 28 397 8	17	1
409878214	191	10 57 532 2	62	12	420000414	556	11 28 399 5	17	1
409878414	191	10 57 532 2	64	4	420000414	557	11 28 399 7	17	1
411200108	653	11 30 567 0	81	1	420000414	614	11 22 322 6	3	10
411514614	65	10 56 073 3	80	6	420000414	616	11 21 552 4	13	2
411514614	188	11 24 113 8	82	8	420000414	618	10 51 743 9	26	2
411514614	211	11 24 114 3	81	8	420000414	633	10 55 372 1	34	34
411514614	218	11 24 114 5	104	6	420000414	649	10 55 280 7	21	4
411514614	329	10 54 591 0	20	4	420000414	657	10 55 514 8	19	4
411514614	402	11 27 970 6	32	1	420001014	8	11 92 958 8	72	6
411514614	711	10 52 293 0	5	4	420001014	71	11 26 557 2	14	4
411514614	718	11 31 446 3	80	3	420001014	77	10 58 163 4	67	6

Item	Sheet	Assembly	Pos.	Quantity	Item	Sheet	Assembly	Pos.	Quantity
420001014	188	11 24 113 8	75	16	420001114	718	11 31 446 3	70	6
420001014	196	11 24 114 0	71	6	420002601	640	99 10 116 14	29	4
420001014	207	11 24 114 2	70	4	420003714	538	11 24 444 4	36	4
420001014	212	11 24 114 4	70	4	420003714	559	11 94 087 8	17	2
420001014	218	11 24 114 5	92	30	420003714	590	99 23 398 14	27	10
420001014	313	11 24 409 0	34	21	420005214	71	11 26 557 2	13	2
420001014	329	10 54 591 0	16	12	420005214	80	11 31 093 2	11	8
420001014	335	11 24 483 7	87	26	420005214	81	10 56 069 4	5	40
420001014	343	10 51 969 7	14	2	420005214	218	11 24 114 5	90	2
420001014	382	10 51 968 2	17	6	420005214	510	11 23 820 3	63	16
420001014	402	11 27 970 6	20	18	420005214	581	11 28 629 9	33	8
420001014	440	11 30 962 5	5	2	420005214	582	11 28 610 5	14	16
420001014	480	11 31 390 8	12	6	420005214	681	11 89 568 6	42	9
420001014	510	11 23 820 3	44	18	420005214	720	10 52 155 4	17	2
420001014	523	99 34 198 14	14	8	420053101	633	10 55 372 1	50	20
420001014	535	11 27 536 5	22	4	420250114	711	10 52 293 0	6	4
420001014	591	99 30 800 14	13	4	420600408	79	10 56 067 3	13	6
420001014	593	99 48 521 14	35	14	421101714	585	11 28 357 6	5	2
420001014	633	10 55 372 1	48	82	421101714	640	99 10 116 14	36	2
420001014	635	11 24 147 8	13	12	421101714	644	99 06 789 14	4	1
420001014	647	10 55 601 0	21	2	421101814	475	10 50 179 5	3	2
420001014	649	10 55 280 7	15	4	421102214	77	10 58 163 4	24	8
420001014	653	11 30 567 0	70	1	421102214	82	99 23 451 14	3	4
420001014	681	11 89 568 6	41	4	421102214	581	11 28 629 9	36	2
420001014	699	10 58 064 7	28	6	421102414	538	11 24 444 4	20	10
420001014	700	10 57 848 6	7	1	421102914	640	99 10 116 14	46	2
420001014	704	11 22 037 2	7	4	421102914	641	99 23 405 14	3	12
420001014	711	10 52 293 0	15	3	421102914	643	99 23 420 14	3	12
420001014	720	10 52 155 4	14	2	421102914	645	97 05 997 03	6	14
420001114	8	11 92 958 8	73	4	421103014	77	10 58 163 4	14	3
420001114	57	10 51 961 6	15	8	421103014	188	11 24 113 8	78	4
420001114	60	10 56 070 1	70	44	421103014	343	10 51 969 7	18	8
420001114	65	10 56 073 3	70	6	421103014	593	99 48 521 14	12	2
420001114	79	10 56 067 3	18	4	421103214	83	10 51 969 4	19	2
420001114	81	10 56 069 4	4	8	421103214	581	11 28 629 9	37	4
420001114	188	11 24 113 8	70	42	421103214	593	99 48 521 14	13	4
420001114	189	10 51 948 1	70	4	421103314	593	99 48 521 14	28	12
420001114	191	10 57 532 2	70	6	421103314	594	11 24 825 8	13	2
420001114	196	11 24 114 0	73	28	421103314	666	11 23 619 7	20	1
420001114	218	11 24 114 5	97	4	421103414	561	11 93 703 7	15	2
420001114	311	11 24 114 6	71	11	421103414	570	11 93 702 0	15	2
420001114	315	11 24 409 0	55	40	421103414	581	11 28 629 9	38	16
420001114	329	10 54 591 0	12	36	421103414	593	99 48 521 14	14	1
420001114	335	11 24 483 7	78	53	421103514	640	99 10 116 14	42	2
420001114	340	10 52 656 0	14	16	421103514	660	10 51 971 3	24	12
420001114	402	11 27 970 6	27	6	421103614	341	99 29 803 14	18	6
420001114	510	11 23 820 3	65	36	421103614	522	99 30 060 14	13	4
420001114	545	99 29 588 14	13	2	421103614	560	99 24 404 14	13	4
420001114	546	10 35 063 3	13	4	421103614	569	99 24 405 14	13	4
420001114	554	11 28 397 7	16	4	421103614	576	99 24 406 14	13	8
420001114	555	11 28 397 8	16	4	421103614	588	99 24 594 14	13	4
420001114	556	11 28 399 5	16	8	421103714	542	99 26 417 14	14	8
420001114	557	11 28 399 7	16	8	421103714	588	99 24 594 14	16	16
420001114	581	11 28 629 9	68	8	421103814	510	11 23 820 3	12	8
420001114	584	10 59 863 3	22	1	421103814	550	11 28 726 4	11	2
420001114	585	11 28 357 6	4	8	421103814	660	10 51 971 3	20	2
420001114	591	99 30 800 14	10	2	421300214	60	10 56 070 1	72	4
420001114	593	99 48 521 14	17	8	421300214	189	10 51 948 1	71	4
420001114	633	10 55 372 1	37	32	421300214	196	11 24 114 0	74	24
420001114	640	99 10 116 14	16	6	421300214	202	11 24 114 1	71	22

Item	Sheet	Assembly	Pos.	Quantity	Item	Sheet	Assembly	Pos.	Quantity
421300214	207	11 24 114 2	72	6	433008108	590	99 23 398 14	33	2
421300214	211	11 24 114 3	71	28	433008214	83	10 51 969 4	16	4
421300214	218	11 24 114 5	94	12	433008814	581	11 28 629 9	48	2
421300214	311	11 24 114 6	72	2	433009014	188	11 24 113 8	31	4
421300414	58	10 56 070 0	70	3	433009014	640	99 10 116 14	30	2
421300414	64	10 56 073 2	70	3	433009114	77	10 58 163 4	15	2
421300514	188	11 24 113 8	77	4	433009114	581	11 28 629 9	49	2
421300514	196	11 24 114 0	72	20	433009114	593	99 48 521 14	19	2
421300514	202	11 24 114 1	70	28	433009408	594	11 24 825 8	14	2
421300514	205	11 28 574 7	70	4	433009514	522	99 30 060 14	14	2
421300514	207	11 24 114 2	71	4	433009514	542	99 26 417 14	15	8
421500614	467	11 89 365 0	7	30	433009514	560	99 24 404 14	14	2
421500614	478	11 89 365 1	7	30	433009514	569	99 24 405 14	14	2
421600901	467	11 89 365 0	53	54	433009514	576	99 24 406 14	14	6
421600901	478	11 89 365 1	53	54	433009514	588	99 24 594 14	14	6
421700314	94	11 24 773 5	36	4	433009714	660	10 51 971 3	33	4
421700508	335	11 24 483 7	88	48	433010314	83	10 51 969 4	20	2
422010414	94	11 24 773 5	38	20	433010314	561	11 93 703 7	14	1
422014001	629	54 02 705 14	23	3	433010314	570	11 93 702 0	14	1
4229913	357	96 96 543 01	27	2	433010314	581	11 28 629 9	50	2
4229913	396	90 01 376 2	75	12	433010314	593	99 48 521 14	32	4
4239009	115	10 11 834 9	24	8	433010314	660	10 51 971 3	25	4
423911601	350	93 88 500 01	32	10	433010314	666	11 23 619 7	21	1
423911601	357	96 96 543 01	8	8	433011114	660	10 51 971 3	21	2
423912001	471	96 93 178 01	69	12	433014214	538	11 24 444 4	21	2
425221314	47	10 53 048 9	9	1	433101208	562	11 23 290 7	12	1
425221314	343	10 51 969 7	16	4	433101208	581	11 28 629 9	53	2
4280008	117	10 11 835 0	31	4	433101208	590	99 23 398 14	34	8
428001014	627	54 02 703 14	45	1	433101208	593	99 48 521 14	41	2
428001414	540	91 90 584 14	6	1	433101208	641	99 23 405 14	6	12
4280020	519	61 61 541 14	3	3	433101208	643	99 23 420 14	6	12
428002914	629	54 02 705 14	13	1	433101208	645	97 05 997 03	7	14
4280032	148	10 13 802 7	41	2	433101208	647	10 55 601 0	22	4
428003314	396	90 01 376 2	41	3	433101208	657	10 55 514 8	13	4
4280034	135	98 84 402	41	1	433101208	687	11 89 568 8	20	4
428004514	628	54 02 704 14	30	1	433102508	510	11 23 820 3	56	2
428011301	246	11 44 800 5	7	2	433102508	559	11 94 087 8	18	2
428011901	471	96 93 178 01	19	5	433102508	593	99 48 521 14	20	2
428100914	627	54 02 703 14	46	1	433102508	660	10 51 971 3	29	8
4281013	627	54 02 703 14	4	1	433105008	341	99 29 803 14	19	6
4281016	628	54 02 704 14	31	1	433105008	510	11 23 820 3	13	8
4281017	148	10 13 802 7	40	1	433105008	522	99 30 060 14	15	2
4281017	156	10 13 803 2	40	1	433105008	550	11 28 726 4	12	2
4281037	629	54 02 705 14	14	1	433105008	560	99 24 404 14	15	2
428104201	474	94 44 065 03	7	1	433105008	561	11 93 703 7	13	1
428107101	471	96 93 178 01	76	1	433105008	569	99 24 405 14	15	2
428107714	629	54 02 705 14	21	1	433105008	570	11 93 702 0	13	1
429612001	471	96 93 178 01	57	1	433105008	576	99 24 406 14	15	2
431500401	396	90 01 376 2	92	2	433105008	581	11 28 629 9	54	2
431500401	471	96 93 178 01	96	2	433105008	588	99 24 594 14	15	2
432003714	511	11 23 820 3	97	2	433105008	593	99 48 521 14	21	3
432008001	471	96 93 178 01	78	1	433105008	640	99 10 116 14	44	2
432016214	77	10 58 163 4	40	1	433105008	666	11 23 619 7	11	1
433006314	475	10 50 179 5	4	2	433105414	340	10 52 656 0	12	4
433006314	585	11 28 357 6	7	2	433105414	618	10 51 743 9	12	2
433006614	82	99 23 451 14	4	4	433206014	591	99 30 800 14	14	1
433006714	343	10 51 969 7	12	8	433206014	593	99 48 521 14	48	1
433007508	77	10 58 163 4	31	4	433206014	633	10 55 372 1	51	8
433007708	77	10 58 163 4	25	4	433206214	510	11 23 820 3	33	2
433008108	538	11 24 444 4	26	4	433206214	633	10 55 372 1	52	10

Item	Sheet	Assembly	Pos.	Quantity	Item	Sheet	Assembly	Pos.	Quantity
433206314	341	99 29 803 14	21	6	471004514	22	11 29 618 6	602	11
433206314	640	99 10 116 14	31	2	471004514	85	10 51 969 5	605	1
450052114	77	10 58 163 4	30	2	471004514	95	11 24 773 5	620	1
450052114	82	99 23 451 14	2	2	471004514	448	11 89 300 5	617	6
451436614	77	10 58 163 4	13	1	471004514	661	10 51 971 2	703	2
453050914	641	99 23 405 14	5	12	471004514	668	10 51 973 8	611	1
453050914	643	99 23 420 14	4	12	471004514	702	10 51 728 1	605	2
453050914	645	97 05 997 03	5	14	471004614	95	11 24 773 5	619	2
460014603	188	11 24 113 8	74	2	471004614	345	10 51 969 8	603	2
460014603	467	11 89 365 0	9	45	471004614	362	10 51 968 7	607	2
460014603	478	11 89 365 1	9	45	471004614	448	11 89 300 5	618	2
4600157	376	99 29 386 14	11	16	471004614	486	11 26 260 6	708	1
4600157	377	99 29 434 14	11	16	471004614	501	11 26 261 1	708	1
4600170	374	99 29 392 14	7	8	471007014	26	11 29 618 6	706	4
4600170	376	99 29 386 14	20	12	471007014	385	10 55 216 1	619	1
4600170	377	99 29 434 14	20	12	471007914	95	11 24 773 5	315	1
460022203	382	10 51 968 2	11	48	471008014	95	11 24 773 5	677	3
460022703	94	11 24 773 5	37	14	471008214	22	11 29 618 6	601	3
460022703	335	11 24 483 7	89	34	471008214	95	11 24 773 5	611	8
460022703	373	99 29 389 14	5	4	471008214	446	11 89 300 5	612	8
460022703	374	99 29 392 14	5	4	471008214	486	11 26 260 6	709	1
460022703	376	99 29 386 14	14	16	471008214	501	11 26 261 1	709	1
460022703	377	99 29 434 14	14	16	471016401	98	11 24 682 0	590	2
460022703	653	11 30 567 0	71	1	471030208	715	10 56 173 5	704	1
460023503	20	11 29 618 6	60	8	471030508	22	11 29 618 6	600	3
460024203	361	10 51 968 6	16	2	471030508	95	11 24 773 5	678	1
460024203	374	99 29 392 14	8	8	471030708	26	11 29 618 6	737	1
460024203	376	99 29 386 14	15	6	471030708	486	11 26 260 6	710	1
460024203	377	99 29 434 14	15	6	471030708	501	11 26 261 1	710	1
4600257	375	99 29 388 14	4	7	471031108	8	11 92 958 8	33	2
4600320	380	99 04 645 14	64	1	471031108	95	11 24 773 5	672	1
4600366	22	11 29 618 6	61	36	471031108	448	11 89 300 5	654	1
4600366	345	10 51 969 8	640	8	471031308	8	11 92 958 8	34	1
4600366	385	10 55 216 1	7	8	471031308	95	11 24 773 5	632	2
4600385	192	10 58 017 0	62	8	471031308	448	11 89 300 5	616	2
4600385	245	10 14 843 8	5	2	471031508	95	11 24 773 5	631	3
4600385	299	10 11 557 7	7	15	471031508	217	11 24 114 5	31	2
4600505	20	11 29 618 6	57	8	471031808	95	11 24 773 5	680	2
4600513	162	10 13 000 5	20	4	471032108	668	10 51 973 8	610	2
4600513	163	10 13 235 7	20	4	471032608	22	11 29 618 6	622	1
4600513	164	10 13 452 1	20	4	471032608	85	10 51 969 5	604	2
4600513	165	10 13 806 8	20	4	471032608	446	11 89 300 5	615	6
4600552	20	11 29 618 6	59	28	471032608	528	10 51 959 1	606	2
4600552	715	10 56 173 5	41	4	471032608	684	11 23 524 8	700	8
4600706	343	10 51 969 7	17	4	471032608	690	10 55 459 4	600	1
4601426	295	10 14 584 5	5	2	471032708	24	11 29 618 6	658	4
4630001	396	90 01 376 2	56	3	471032708	85	10 51 969 5	603	2
4630200	60	10 56 070 1	63	4	471032708	446	11 89 300 5	600	24
4630200	385	10 55 216 1	8	8	471032708	528	10 51 959 1	627	2
4630200	471	96 93 178 01	11	15	471032708	661	10 51 971 2	704	2
4635283	189	10 51 948 1	73	12	471032708	678	11 89 408 3	703	8
4635283	211	11 24 114 3	72	8	471032708	702	10 51 728 1	609	1
4635283	218	11 24 114 5	95	2	471032808	22	11 29 618 6	621	27
470002414	506	91 90 239 14	700	1	471032808	95	11 24 773 5	630	3
470400701	356	93 36 755 01	11	1	471032808	345	10 51 969 8	602	3
470400701	356	93 36 755 01	26	1	471032808	362	10 51 968 7	609	3
470701414	96	11 24 773 5	691	1	471032808	448	11 89 300 5	622	2
470702001	356	93 36 755 01	6	1	471032808	506	91 90 239 14	701	1
470905214	195	11 24 114 0	36	1	471032808	702	10 51 728 1	600	1
470905714	195	11 24 114 0	37	3	471032808	715	10 56 173 5	705	3

Item	Sheet	Assembly	Pos.	Quantity	Item	Sheet	Assembly	Pos.	Quantity
471032908	22	11 29 618 6	616	1	474033014	501	11 26 261 1	714	2
471033014	95	11 24 773 5	629	1	474033014	513	10 51 826 1	601	4
471033014	345	10 51 969 8	601	1	475002514	528	10 51 959 1	628	2
471033014	448	11 89 300 5	651	2	475033014	668	10 51 973 8	609	3
471033014	620	10 51 726 2	602	2	475033614	528	10 51 959 1	619	1
471033114	26	11 29 618 6	707	1	475501414	22	11 29 618 6	635	2
471033214	26	11 29 618 6	722	2	475501414	446	11 89 300 5	604	4
471033214	448	11 89 300 5	636	1	475501914	95	11 24 773 5	685	1
471033214	513	10 51 826 1	608	3	475501914	668	10 51 973 8	606	1
471033214	528	10 51 959 1	605	3	475502514	448	11 89 300 5	625	4
471033214	620	10 51 726 2	603	2	475503314	513	10 51 826 1	212	2
471033214	661	10 51 971 2	709	2	476608008	195	11 24 114 0	39	1
471033214	678	11 89 408 3	704	1	477102814	217	11 24 114 5	57	2
471033314	362	10 51 968 7	606	1	477400314	96	11 24 773 5	690	2
471033414	26	11 29 618 6	725	1	477400314	506	91 90 239 14	702	1
471033614	26	11 29 618 6	738	1	477400414	528	10 51 959 1	673	1
471034414	26	11 29 618 6	726	2	477400414	684	11 23 524 8	605	8
471034414	385	10 55 216 1	612	2	477400614	513	10 51 826 1	208	2
471034414	513	10 51 826 1	604	2	477400714	22	11 29 618 6	633	2
471034708	24	11 29 618 6	672	4	477400814	385	10 55 216 1	624	4
471034708	95	11 24 773 5	637	1	477401014	513	10 51 826 1	202	4
471034714	212	11 24 114 4	25	2	477401814	20	11 29 618 6	46	1
471034714	345	10 51 969 8	607	1	477430614	8	11 92 958 8	41	2
471036014	448	11 89 300 5	652	2	477510201	396	90 01 376 2	2	4
471039408	362	10 51 968 7	612	1	477700114	22	11 29 618 6	639	2
471039408	385	10 55 216 1	611	2	477700114	95	11 24 773 5	655	1
471039708	385	10 55 216 1	618	2	477700114	513	10 51 826 1	214	2
471039708	620	10 51 726 2	600	1	477700214	22	11 29 618 6	619	1
471039908	8	11 92 958 8	42	1	477700214	446	11 89 300 5	23	1
471039908	95	11 24 773 5	635	3	477700414	96	11 24 773 5	689	2
471039908	448	11 89 300 5	655	2	477700414	506	91 90 239 14	703	1
471100114	22	11 29 618 6	617	3	477700514	22	11 29 618 6	638	6
471100114	528	10 51 959 1	604	2	477700514	513	10 51 826 1	213	2
471100414	22	11 29 618 6	608	2	477700514	528	10 51 959 1	202	1
471100614	448	11 89 300 5	620	2	477700514	684	11 23 524 8	606	8
471100714	26	11 29 618 6	756	1	477700714	20	11 29 618 6	47	1
471100714	528	10 51 959 1	603	1	477700814	22	11 29 618 6	634	1
472001401	356	93 36 755 01	4	1	477701114	513	10 51 826 1	207	2
472531508	26	11 29 618 6	723	1	477701414	22	11 29 618 6	632	2
472531508	528	10 51 959 1	624	2	477701514	385	10 55 216 1	625	4
472531508	668	10 51 973 8	608	3	477701814	513	10 51 826 1	211	4
472531508	715	10 56 173 5	703	1	477704514	8	11 92 958 8	40	1
473201101	356	93 36 755 01	3	1	477704514	396	90 01 376 2	78	1
473201101	356	93 36 755 01	22	1	477704514	448	11 89 300 5	650	1
473210214	528	10 51 959 1	632	1	477704614	26	11 29 618 6	720	3
473210214	668	10 51 973 8	607	3	477704614	60	10 56 070 1	19	1
473210214	678	11 89 408 3	700	1	477704614	65	10 56 073 3	17	5
473231214	528	10 51 959 1	633	1	477704614	94	11 24 773 5	300	1
474001214	26	11 29 618 6	760	1	477704914	5	11 93 045 7	35	2
474002314	22	11 29 618 6	620	4	477704914	95	11 24 773 5	306	1
474002414	26	11 29 618 6	744	2	477704914	191	10 57 532 2	32	1
474002414	446	11 89 300 5	614	4	477704914	195	11 24 114 0	38	4
474032614	22	11 29 618 6	628	3	477704914	207	11 24 114 2	64	2
474032614	513	10 51 826 1	602	4	477705114	362	10 51 968 7	202	1
474032614	528	10 51 959 1	600	8	477705214	217	11 24 114 5	58	1
474032714	24	11 29 618 6	650	2	481930314	668	10 51 973 8	612	1
474032914	22	11 29 618 6	636	2	481930414	22	11 29 618 6	630	3
474033014	26	11 29 618 6	719	4	481930414	448	11 89 300 5	624	2
474033014	448	11 89 300 5	647	8	481930414	506	91 90 239 14	704	1
474033014	486	11 26 260 6	714	2	481930514	486	11 26 260 6	703	1

Item	Sheet	Assembly	Pos.	Quantity	Item	Sheet	Assembly	Pos.	Quantity
481930514	501	11 26 261 1	703	1	485546514	402	11 27 970 6	50	12
481930614	528	10 51 959 1	622	1	485546514	440	11 30 962 5	7	4
481930714	668	10 51 973 8	604	1	485549914	57	10 51 961 6	21	2
481931114	26	11 29 618 6	761	1	485549914	81	10 56 069 4	2	8
481931614	96	11 24 773 5	687	1	485549914	331	11 24 922 2	32	53
481933014	448	11 89 300 5	623	4	485550014	79	10 56 067 3	19	4
481933614	95	11 24 773 5	319	1	485550014	313	11 24 409 0	29	21
482330814	26	11 29 618 6	730	2	485550014	331	11 24 922 2	25	2
482330814	95	11 24 773 5	675	1	485550114	315	11 24 409 0	61	5
482331114	668	10 51 973 8	603	3	485550114	373	99 29 389 14	4	4
482331914	26	11 29 618 6	721	3	485550114	374	99 29 392 14	4	4
482331914	513	10 51 826 1	600	2	485550114	376	99 29 386 14	16	2
482430314	24	11 29 618 6	693	1	485550114	377	99 29 434 14	16	2
482430314	385	10 55 216 1	201	1	485550114	402	11 27 970 6	30	3
482430614	446	11 89 300 5	606	2	485550114	633	10 55 372 1	43	2
482431214	668	10 51 973 8	602	1	485553914	711	10 52 293 0	16	3
482431314	22	11 29 618 6	204	1	485555314	79	10 56 067 3	12	2
482431314	95	11 24 773 5	643	2	485556314	626	54 02 702 14	23	4
482431314	486	11 26 260 6	705	1	485557714	350	93 88 500 01	36	3
482431314	501	11 26 261 1	705	1	485557714	402	11 27 970 6	29	8
482431414	486	11 26 260 6	706	1	485557714	614	11 22 322 6	5	2
482431414	501	11 26 261 1	706	1	485559814	79	10 56 067 3	14	2
482431514	528	10 51 959 1	671	1	485565814	78	99 08 706 14	2	2
482431714	385	10 55 216 1	623	4	485565814	554	11 28 397 7	12	1
482530814	26	11 29 618 6	755	2	485565814	555	11 28 397 8	12	1
482530814	95	11 24 773 5	660	1	485565814	559	11 94 087 8	19	2
482530914	26	11 29 618 6	736	1	485565814	584	10 59 863 3	24	2
482530914	94	11 24 773 5	301	2	485565814	640	99 10 116 14	43	2
482531614	22	11 29 618 6	615	1	485565814	642	99 10 125 14	5	1
482531814	24	11 29 618 6	652	2	485565814	644	99 06 789 14	5	1
482531814	448	11 89 300 5	649	4	485568414	640	99 10 116 14	38	2
485430714	26	11 29 618 6	748	1	485568514	374	99 29 392 14	9	4
485431214	26	11 29 618 6	714	2	485568514	376	99 29 386 14	17	12
485431214	95	11 24 773 5	683	3	485568514	377	99 29 434 14	17	12
485431314	24	11 29 618 6	666	4	485568614	559	11 94 087 8	11	8
485431414	22	11 29 618 6	205	1	485569314	483	99 26 718 14	14	16
485432814	26	11 29 618 6	759	1	485569314	636	11 24 575 5	14	16
485433314	95	11 24 773 5	684	1	485570714	79	10 56 067 3	23	4
485433314	486	11 26 260 6	713	2	485581914	51	10 56 645 8	54	1
485433314	501	11 26 261 1	713	2	4900093	357	96 96 543 01	52	4
485433314	528	10 51 959 1	613	8	4900093	396	90 01 376 2	27	8
485433314	620	10 51 726 2	615	2	4900125	117	10 11 835 0	30	2
485433314	661	10 51 971 2	710	2	4900262	195	11 24 114 0	32	7
485433414	26	11 29 618 6	758	1	4900778	196	11 24 114 0	91	4
485433414	506	91 90 239 14	705	1	4900778	274	10 14 736 9	11	2
485433414	528	10 51 959 1	629	2	4900778	292	10 14 013 6	25	2
485433514	85	10 51 969 5	610	1	4900778	507	91 76 658 14	2	1
485433514	528	10 51 959 1	630	1	4900980	581	11 28 629 9	66	4
485434214	26	11 29 618 6	747	1	4900980	668	10 51 973 8	302	2
485435014	24	11 29 618 6	651	2	4900981	471	96 93 178 01	62	24
485435714	26	11 29 618 6	713	1	4901067	20	11 29 618 6	56	16
485436414	448	11 89 300 5	629	2	4901104	256	10 13 382 3	8	1
485436414	620	10 51 726 2	617	1	4901138	239	10 14 671 6	2	1
485437514	95	11 24 773 5	313	1	4901195	118	92 67 343	13	1
485501714	77	10 58 163 4	23	2	4901450	296	10 12 037 2	4	3
485518914	660	10 51 971 3	19	2	4901782	8	11 92 958 8	75	3
485519214	666	11 23 619 7	19	1	4901782	47	10 53 048 9	10	1
485529714	98	11 24 682 0	370	2	4901782	60	10 56 070 1	71	12
485529814	98	11 24 682 0	410	2	4901782	77	10 58 163 4	20	2
485546414	440	11 30 962 5	6	4	4901782	79	10 56 067 3	11	2

Item	Sheet	Assembly	Pos.	Quantity	Item	Sheet	Assembly	Pos.	Quantity
4901782	188	11 24 113 8	76	4	501540514	380	99 04 645 14	98	7
4901782	192	10 58 017 0	70	20	501559414	380	99 04 645 14	96	1
4901782	202	11 24 114 1	72	3	502027514	380	99 04 645 14	122	1
4901782	439	10 53 756 0	8	2	502027614	380	99 04 645 14	60	2
4901782	467	11 89 365 0	23	15	502037201	471	96 93 178 01	80	1
4901782	478	11 89 365 1	23	15	502038301	396	90 01 376 2	80	1
4901782	480	11 31 390 8	23	24	502050814	199	51 22 501 14	990	1
4901782	510	11 23 820 3	22	16	502050814	204	51 22 394 14	990	1
4901782	559	11 94 087 8	14	4	502661608	8	11 92 958 8	7	1
4901782	593	99 48 521 14	18	2	502919808	8	11 92 958 8	5	1
4901782	633	10 55 372 1	49	10	502921908	8	11 92 958 8	10	1
4901782	637	11 27 109 7	12	6	503192801	355	93 95 895 01	8	10
4901782	699	10 58 064 7	25	2	503192901	355	93 95 895 01	9	9
4901893	193	11 24 113 9	71	4	503199301	397	50 20 383 01	5	9
4902260	192	10 58 017 0	60	10	503199301	399	93 93 478 01	4	9
491033414	668	10 51 973 8	601	1	503199401	399	93 93 478 01	5	7
491101214	26	11 29 618 6	757	1	505104914	98	11 24 682 0	260	1
4980000	255	10 13 394 7	3	1	505105814	98	11 24 682 0	250	2
4980012	299	10 11 557 7	6	2	510095914	722	10 52 957 6	10	1
4980013	115	10 11 834 9	25	16	510232214	620	10 51 726 2	2	1
4980046	119	10 11 835 7	44	2	510336114	715	10 56 173 5	1	1
4980082	153	10 14 131 6	21	1	510403414	446	11 89 300 5	14	4
4980362	226	11 38 961 7	2	6	510411614	528	10 51 959 1	10	1
4980482	243	10 14 636 7	7	2	510427214	34	10 35 148 6	6	2
4980548	115	10 11 834 9	26	8	510427214	620	10 51 726 2	5	1
4980638	151	10 12 224 5	44	2	510427914	528	10 51 959 1	5	1
4980664	270	10 14 588 5	10	1	510429214	528	10 51 959 1	4	1
4980741	14	11 41 475 7	3	4	510438514	446	11 89 300 5	4	2
4980741	293	10 14 511 2	13	1	510466114	702	10 51 728 1	2	1
4980750	126	10 13 975 2	46	1	510493714	486	11 26 260 6	4	1
4980793	101	11 21 990 5	6	1	510493714	501	11 26 261 1	4	1
4980805	256	10 13 382 3	15	1	510497214	94	11 24 773 5	33	1
4980805	275	10 14 736 4	4	3	510511814	467	11 89 365 0	37	5
4980805	295	10 14 584 5	7	1	510511814	478	11 89 365 1	37	5
4980805	296	10 12 037 2	3	3	510548714	22	11 29 618 6	105	8
4980840	121	90 74 418	20	4	510559314	195	11 24 114 0	43	2.5
4980900	125	92 78 875	20	1	510571914	20	11 29 618 6	15	1
4980920	157	10 12 226 2	21	8	510571914	528	10 51 959 1	9	1
4980938	123	10 13 333 4	20	2	510572214	20	11 29 618 6	14	2
4980947	161	10 12 987 4	20	2	510572214	528	10 51 959 1	8	1
4980977	151	10 12 224 5	46	4	510574414	22	11 29 618 6	100	8
4980986	157	10 12 226 2	20	1	510574414	191	10 57 532 2	21	2
4981029	239	10 14 671 6	8	3	510586614	22	11 29 618 6	103	12
4981077	145	10 12 224 8	22	2	510586614	362	10 51 968 7	617	4
4981218	119	10 11 835 7	43	8	510586614	448	11 89 300 5	646	16
4981218	131	98 89 833	43	4	510586614	486	11 26 260 6	730	8
4981218	134	98 89 832	43	4	510586614	501	11 26 261 1	730	8
4981226	269	10 14 333 9	6	4	510586914	22	11 29 618 6	104	18
4981232	272	10 14 179 0	1	2	510586914	345	10 51 969 8	620	4
4981235	237	10 14 591 9	3	1	510586914	385	10 55 216 1	630	4
4981235	292	10 14 013 6	10	1	510587514	22	11 29 618 6	101	8
5004624	235	10 15 529 8	8	1	510587514	95	11 24 773 5	312	2
5004927	232	10 14 201 8	9	1	510587514	385	10 55 216 1	631	8
5004929	276	10 14 967 6	6	2	510587514	528	10 51 959 1	650	2
5005525	480	11 31 390 8	41	4	510587514	668	10 51 973 8	614	2
501507014	626	54 02 702 14	13	1	510587908	191	10 57 532 2	26	1
501507214	626	54 02 702 14	14	1	5106280	60	10 56 070 1	18	4
501507314	626	54 02 702 14	15	1	510629008	95	11 24 773 5	318	1
501532014	626	54 02 702 14	9	1	510629008	446	11 89 300 5	205	2
501540414	380	99 04 645 14	97	8	510641214	94	11 24 773 5	16	1

Item	Sheet	Assembly	Pos.	Quantity	Item	Sheet	Assembly	Pos.	Quantity
510662614	20	11 29 618 6	12	2	511491914	20	11 29 618 6	7	2
510662914	20	11 29 618 6	23	3	511491914	446	11 89 300 5	11	2
510662914	345	10 51 969 8	5	1	511493914	346	51 22 527 14	51	2
510662914	362	10 51 968 7	5	1	511495814	20	11 29 618 6	20	1
510662914	715	10 56 173 5	20	1	511502414	22	11 29 618 6	102	24
510664814	22	11 29 618 6	200	2	511502414	95	11 24 773 5	310	6
510664814	486	11 26 260 6	701	2	511502414	191	10 57 532 2	20	6
510664814	501	11 26 261 1	701	2	511511214	20	11 29 618 6	18	1
510664814	620	10 51 726 2	613	2	511511314	20	11 29 618 6	17	1
510682014	20	11 29 618 6	39	1	511598114	191	10 57 532 2	22	2
510682014	506	91 90 239 14	1	1	511607014	528	10 51 959 1	6	1
510690614	60	10 56 070 1	13	1	511607214	20	11 29 618 6	31	1
510694314	505	10 56 183 8	10	2	511614214	363	51 22 942 14	61	1
510694514	22	11 29 618 6	202	19	511619614	346	51 22 527 14	50	2
510694514	85	10 51 969 5	201	2	511631514	20	11 29 618 6	41	1
510694514	95	11 24 773 5	671	14	511637714	94	11 24 773 5	15	1
510694514	345	10 51 969 8	201	2	511639714	363	51 22 942 14	50	2
510694514	362	10 51 968 7	201	2	511640414	668	10 51 973 8	3	1
510694514	385	10 55 216 1	203	2	511640614	181	51 16 377 14	1	1
510694514	446	11 89 300 5	204	8	511640714	181	51 16 377 14	2	1
510694514	486	11 26 260 6	700	2	511640814	181	51 16 377 14	3	1
510694514	501	11 26 261 1	700	2	511655114	455	11 22 473 8	50	2
510694514	528	10 51 959 1	201	1	511657614	20	11 29 618 6	13	1
510694514	668	10 51 973 8	202	1	511704214	20	11 29 618 6	8	1
510694514	715	10 56 173 5	700	1	511704314	506	91 90 239 14	2	1
510695314	668	10 51 973 8	201	2	511708414	20	11 29 618 6	16	1
510695314	678	11 89 408 3	706	1	511710314	41	51 05 719 14	13	1
510701214	26	11 29 618 6	745	1	511713914	195	11 24 114 0	40	1
510701314	24	11 29 618 6	677	2	511713914	217	11 24 114 5	36	3
510701914	26	11 29 618 6	711	2	512214414	94	11 24 773 5	10	1
510702014	26	11 29 618 6	742	1	512239414	203	10 57 423 9	5	1
510702414	26	11 29 618 6	712	1	512249914	94	11 24 773 5	7	1
510702414	486	11 26 260 6	702	1	512250114	198	10 57 423 7	6	1
510703914	26	11 29 618 6	740	1	512252714	345	10 51 969 8	2	1
510704614	24	11 29 618 6	664	1	512256614	387	51 14 347 14	250	1
510705314	20	11 29 618 6	43	2	512259414	346	51 22 527 14	990	1
510709114	668	10 51 973 8	600	1	512259514	346	51 22 527 14	61	1
510709214	95	11 24 773 5	679	1	512294214	362	10 51 968 7	2	1
510710614	446	11 89 300 5	10	4	512299114	385	10 55 216 1	3	2
510713814	63	51 06 906 14	1	1	512299214	388	51 22 991 14	990	1
511414514	94	11 24 773 5	18	1	512401414	363	51 22 942 14	60	1
511419314	94	11 24 773 5	22	1	512401514	363	51 22 942 14	51	2
511432714	20	11 29 618 6	11	5	512402214	363	51 22 942 14	990	1
511432714	345	10 51 969 8	4	1	512405914	446	11 89 300 5	3	2
511432714	362	10 51 968 7	3	1	512406114	625	54 02 701 14	11	1
511432714	715	10 56 173 5	10	1	512406214	625	54 02 701 14	21	1
511434714	385	10 55 216 1	2	1	512411914	455	11 22 473 8	10	1
511442214	94	11 24 773 5	27	1	512416214	452	10 50 351 3	98	1
511455014	620	10 51 726 2	3	1	512714614	397	50 20 383 01	10	1
511458114	446	11 89 300 5	16	4	512714614	400	93 93 479 01	9	1
511458814	486	11 26 260 6	5	1	512714714	397	50 20 383 01	11	1
511458814	501	11 26 261 1	5	1	512714714	400	93 93 479 01	10	1
511464114	715	10 56 173 5	30	1	513313914	20	11 29 618 6	10	2
511467914	620	10 51 726 2	4	1	513314114	446	11 89 300 5	13	4
511475514	528	10 51 959 1	7	1	513319014	460	51 33 141 14	99	1
511476914	345	10 51 969 8	3	1	513319214	39	51 33 139 14	99	1
511476914	362	10 51 968 7	4	1	513319614	39	51 33 139 14	13	1
511480614	690	10 55 459 4	2	1	513319814	460	51 33 141 14	17	1
511486614	532	51 14 755 14	30	1	514618508	106	11 21 993 0	47	1
511486714	532	51 14 755 14	20	1	540136314	85	10 51 969 5	3	4

Item	Sheet	Assembly	Pos.	Quantity	Item	Sheet	Assembly	Pos.	Quantity
540244214	625	54 02 701 14	14	72	592052914	723	51 00 959 14	29	1
540270114	624	59 20 694 14	1	1	592054714	380	99 04 645 14	95	1
540270214	624	59 20 694 14	21	1	592069414	618	10 51 743 9	27	1
540270314	624	59 20 694 14	22	1	592070414	191	10 57 532 2	7	1
540270414	624	59 20 694 14	23	1	592070714	30	11 28 647 6	145	2
540270514	624	59 20 694 14	24	1	592071014	30	11 28 647 6	230	1
540270614	625	54 02 701 14	12	3	592072914	30	11 28 647 6	112	1
540270714	625	54 02 701 14	13	1	592089814	380	99 04 645 14	69	1
540270814	625	54 02 701 14	15	6	592104114	85	10 51 969 5	2	2
540270914	625	54 02 701 14	23	1	592104214	668	10 51 973 8	2	1
540271014	625	54 02 701 14	22	3	592138514	716	51 03 361 14	1	1
540271114	625	54 02 701 14	24	48	592138614	716	51 03 361 14	2	1
540271214	625	54 02 701 14	25	6	592145814	20	11 29 618 6	4	1
540271314	625	54 02 701 14	27	1	592158414	668	10 51 973 8	4	1
540271414	625	54 02 701 14	28	3	592178314	668	10 51 973 8	5	1
540271514	625	54 02 701 14	29	1	592178514	98	11 24 682 0	20	1
540271614	626	54 02 702 14	2	1	592178914	98	11 24 682 0	580	1
540271714	626	54 02 702 14	5	1	592182614	684	11 23 524 8	1	4
540271814	627	54 02 703 14	1	1	592200514	94	11 24 773 5	20	1
540271914	627	54 02 703 14	3	1	592257814	191	10 57 532 2	44	1
540272014	627	54 02 703 14	30	1	592274714	446	11 89 300 5	6	2
540272114	627	54 02 703 14	31	1	592274714	513	10 51 826 1	4	1
540272214	627	54 02 703 14	32	1	592285714	423	10 35 007 6	3	1
540272314	627	54 02 703 14	33	1	592285814	423	10 35 007 6	4	1
540272414	627	54 02 703 14	60	1	592286314	423	10 35 007 6	26	1
540272514	628	54 02 704 14	1	1	592286514	419	10 35 008 0	36	1
540272614	628	54 02 704 14	2	3	592286514	423	10 35 007 6	11	5
540272714	628	54 02 704 14	3	1	592286714	419	10 35 008 0	9	2
540272814	629	54 02 705 14	1	1	592286814	419	10 35 008 0	13	1
540272914	629	54 02 705 14	4	1	592286914	419	10 35 008 0	25	1
540273014	629	54 02 705 14	7	1	592287014	419	10 35 008 0	26	1
540273114	629	54 02 705 14	11	1	592287114	419	10 35 008 0	28	1
540273214	629	54 02 705 14	20	1	592287214	426	59 22 871 14	10	1
540273314	626	54 02 702 14	1	1	592287414	426	59 22 871 14	13	1
540287614	397	50 20 383 01	6	7	592287514	426	59 22 871 14	15	1
550789808	207	11 24 114 2	16	1	592287614	426	59 22 871 14	16	1
550936214	196	11 24 114 0	94	1	592287714	426	59 22 871 14	17	1
550945314	43	10 22 592 5	6	1	592287814	426	59 22 871 14	18	1
552006114	60	10 56 070 1	26	2	592287914	426	59 22 871 14	19	1
552066514	60	10 56 070 1	22	2	592288014	426	59 22 871 14	20	1
553078814	705	11 93 621 2	15	2.2	592288114	426	59 22 871 14	31	1
553079914	402	11 27 970 6	13	1	592288214	426	59 22 871 14	32	1
553087814	217	11 24 114 5	37	1	592288314	419	10 35 008 0	33	1
553128608	218	11 24 114 5	70	1	592288314	426	59 22 871 14	12	1
553183708	215	10 30 300 7	6	1	592288414	419	10 35 008 0	34	1
5609144	436	10 28 999 3	53	1	592288514	419	10 35 008 0	43	1
5700024	232	10 14 201 8	8	5	592288614	419	10 35 008 0	44	1
5700088	252	10 12 948 0	2	1	592288714	419	10 35 008 0	45	1
570114908	621	51 02 322 14	116	1	592288814	419	10 35 008 0	46	1
570948608	177	11 21 593 6	33	1	592288914	419	10 35 008 0	47	1
570950308	172	70 19 834	1	1	592289014	419	10 35 008 0	48	1
571352308	10	11 83 721 4	1	1	592289114	419	10 35 008 0	49	1
571827308	98	11 24 682 0	400	8	592289214	419	10 35 008 0	50	1
571895008	608	79 05 205 14	18	4	592289314	419	10 35 008 0	52	1
591645108	315	11 24 409 0	64	1	592289414	419	10 35 008 0	53	1
592000814	702	10 51 728 1	3	1	592289514	419	10 35 008 0	57	1
592007514	402	11 27 970 6	14	1	592289614	427	59 22 895 14	2	1
592022414	528	10 51 959 1	3	2	592289714	427	59 22 895 14	3	1
592031814	703	59 20 008 14	9	1	592289814	420	10 35 008 0	72	1
592044714	20	11 29 618 6	33	1	592289914	420	10 35 008 0	73	1

Item	Sheet	Assembly	Pos.	Quantity	Item	Sheet	Assembly	Pos.	Quantity
592290014	420	10 35 008 0	76	1	602125114	51	10 56 645 8	22	7
592290114	420	10 35 008 0	78	1	602134114	51	10 56 645 8	59	4
592290214	420	10 35 008 0	81	1	602151914	406	10 55 963 5	86	4
592290314	420	10 35 008 0	82	1	602153814	51	10 56 645 8	23	39
592290414	420	10 35 008 0	84	1	602153814	406	10 55 963 5	74	13
592290514	420	10 35 008 0	85	1	602153814	406	10 55 963 5	80	4
592290614	428	59 22 905 14	4	1	602203914	403	11 27 973 6	55	6
592290714	428	59 22 905 14	6	1	602203914	404	11 27 973 6	92	6
592290814	428	59 22 905 14	8	1	602203914	725	10 52 155 9	71	2
592291014	420	10 35 008 0	94	1	602206114	51	10 56 645 8	24	1
592291114	420	10 35 008 0	97	1	602206514	46	11 24 519 0	74	2
592291214	420	10 35 008 0	102	1	602208714	406	10 55 963 5	92	1
592291314	420	10 35 008 0	108	1	602209014	404	11 27 973 6	91	1
592291414	420	10 35 008 0	116	1	602209314	51	10 56 645 8	80	42
592291514	429	59 22 914 14	1	1	602209714	406	10 55 963 5	93	1
592291614	429	59 22 914 14	2	1	602303214	51	10 56 645 8	73	1
592291714	429	59 22 914 14	3	1	602305914	403	11 27 973 6	54	3
592291814	420	10 35 008 0	121	1	602305914	725	10 52 155 9	70	1
592291914	420	10 35 008 0	123	1	602307708	51	10 56 645 8	100	2
592293114	432	11 93 934 6	51	1	602339508	417	11 95 272 6	13	3
592293114	433	10 58 467 1	51	1	602440301	516	11 90 151 1	23	1
592293214	432	11 93 934 6	52	1	602440301	516	11 90 151 1	45	1
592293214	433	10 58 467 1	60	1	602453214	415	91 65 251 14	5	2
592293314	432	11 93 934 6	70	1	602453914	415	91 65 251 14	8	2
592293414	432	11 93 934 6	180	1	602454614	415	91 65 251 14	2	2
592293514	432	11 93 934 6	190	1	602454714	415	91 65 251 14	4	2
592293614	432	11 93 934 6	230	1	602457014	415	91 65 251 14	3	2
592293714	432	11 93 934 6	240	2	602457114	415	91 65 251 14	6	2
592293814	432	11 93 934 6	260	1	602457214	415	91 65 251 14	7	2
592300614	30	11 28 647 6	152	13	602458214	411	10 53 171 8	15	8
592309014	30	11 28 647 6	200	1	602481914	415	91 65 251 14	1	1
592309014	30	11 28 647 6	205	1	602501208	51	10 56 645 8	55	1
592316114	98	11 24 682 0	150	1	602604314	725	10 52 155 9	56	1
592316314	98	11 24 682 0	210	1	602707214	504	10 56 187 5	90	1
592316414	98	11 24 682 0	220	1	602707414	504	10 56 187 5	91	1
592317014	98	11 24 682 0	600	1	602720514	51	10 56 645 8	28	4
592323114	446	11 89 300 5	5	4	602730714	51	10 56 645 8	25	3
592323514	317	11 24 409 1	11	7	602731714	51	10 56 645 8	51	1
592323514	329	10 54 591 0	22	3	602812414	406	10 55 963 5	88	1
592330814	191	10 57 532 2	14	1	602812714	51	10 56 645 8	26	1
592333714	426	59 22 871 14	6	1	602812714	406	10 55 963 5	87	1
6001593	411	10 53 171 8	21	5	602832314	406	10 55 963 5	72	1
6003031	403	11 27 973 6	47	6	602835914	51	10 56 645 8	52	1
6003031	404	11 27 973 6	95	6	603000408	319	11 24 409 1	17	2.3
600385314	516	11 90 151 1	31	10.5	603018114	584	10 59 863 3	18	0.2
600454314	403	11 27 973 6	53	6.5	603202314	16	11 93 193 0	15	1
600454314	595	97 14 959 03	35	4	603202314	305	10 15 028 8	99	2
602008508	8	11 92 958 8	55	2	603202514	16	11 93 193 0	16	1
602008508	195	11 24 114 0	57	6	604105314	406	10 55 963 5	68	5
602008808	480	11 31 390 8	38	4	604105314	407	99 20 811 14	5	5
602010114	480	11 31 390 8	36	16	604105414	407	99 20 811 14	7	5
602016514	511	11 23 820 3	73	4	604105514	406	10 55 963 5	69	41
602017114	510	11 23 820 3	72	4	604105514	407	99 20 811 14	10	10
602017114	552	11 28 390 8	19	4	604105614	406	10 55 963 5	70	6
602017114	568	11 28 583 8	19	4	604105614	407	99 20 811 14	15	5
602017114	575	11 28 626 1	19	4	605013408	516	11 90 151 1	52	1
602025814	196	11 24 114 0	93	3	605013508	516	11 90 151 1	53	1
602026414	467	11 89 365 0	48	3	605013508	539	10 53 120 7	51	2
602026414	478	11 89 365 1	48	3	605253314	406	10 55 963 5	201	11
602106714	51	10 56 645 8	58	0.37	605253414	406	10 55 963 5	211	1

Item	Sheet	Assembly	Pos.	Quantity	Item	Sheet	Assembly	Pos.	Quantity
605254114	406	10 55 963 5	213	1	630120108	406	10 55 963 5	81	4
605254214	406	10 55 963 5	203	11	630121508	406	10 55 963 5	83	1
605264814	403	11 27 973 6	51	3	630122908	406	10 55 963 5	84	1
605601701	516	11 90 151 1	35	5	630160214	724	10 52 155 9	41	2
605601701	595	97 14 959 03	32	6	630170014	406	10 55 963 5	85	1
605601801	51	10 56 645 8	427	24	6905271	722	10 52 957 6	13	2
605604714	516	11 90 151 1	33	1	692405708	417	11 95 272 6	15	4
605604714	595	97 14 959 03	31	1	692406008	417	11 95 272 6	11	1
605604914	46	11 24 519 0	93	1	692406008	417	11 95 272 6	12	1
605608401	516	11 90 151 1	44	24	692815514	586	97 07 204 03	31	1
605609514	46	11 24 519 0	94	1	693003414	724	10 52 155 9	32	1
605609514	51	10 56 645 8	32	1	693003614	724	10 52 155 9	31	1
605609514	516	11 90 151 1	62	1	693013014	722	10 52 957 6	11	1
605609514	595	97 14 959 03	51	1	693013414	722	10 52 957 6	12	1
605610301	51	10 56 645 8	426	24	693030914	404	11 27 973 6	97	2
605611814	516	11 90 151 1	43	1	693061214	516	11 90 151 1	26	15
605612014	51	10 56 645 8	42	1	693061314	51	10 56 645 8	29	1
605612014	517	11 90 151 1	72	1	693061314	516	11 90 151 1	25	1
605613701	51	10 56 645 8	41	1	693061314	517	11 90 151 1	73	2
605614714	722	10 52 957 6	14	2	693061414	516	11 90 151 1	24	8
605615814	516	11 90 151 1	36	5	693061514	517	11 90 151 1	63	2
605619814	516	11 90 151 1	34	14	693061514	595	97 14 959 03	52	2
605620008	417	11 95 272 6	14	3	693067614	579	10 53 141 3	11	2
606070908	45	11 24 519 0	35	1	693073014	414	11 26 095 7	33	1
606272314	409	11 21 481 8	1	1	693073014	724	10 52 155 9	33	1
606279014	497	11 22 050 0	20	1	693106214	516	11 90 151 1	51	1.5
606279014	503	11 22 050 1	20	1	693113814	98	11 24 682 0	485	1
606279214	487	11 21 634 2	1	1	693138614	406	10 55 963 5	73	1
606281014	45	11 24 519 0	45	1	693148214	725	10 52 155 9	55	1
606281114	45	11 24 519 0	46	1	693149814	51	10 56 645 8	45	1
606655108	45	11 24 519 0	43	1	693155014	516	11 90 151 1	32	1
606655208	596	92 75 218 08	1	1	693155014	595	97 14 959 03	30	1
606655308	596	92 75 218 08	2	1	693157114	516	11 90 151 1	61	1
606667814	411	10 53 171 8	12	1	693157114	595	97 14 959 03	50	1
606672114	411	10 53 171 8	10	2	693157214	517	11 90 151 1	71	1
606674714	411	10 53 171 8	11	4	693168514	408	10 51 907 9	41	1
606718408	414	11 26 095 7	35	1	693181114	406	10 55 963 5	71	3
606774714	516	11 90 151 1	27	1	693182314	406	10 55 963 5	78	2
606907114	724	10 52 155 9	37	1	693183914	406	10 55 963 5	91	1
607021114	48	70 27 205	15	1	693208614	36	11 22 918 4	1	2
607021714	49	10 22 450 0	1	1	7000329	120	92 74 731	23	2
607021714	403	11 27 973 6	42	1	7000942	30	11 28 647 6	164	7
607021714	406	10 55 963 5	42	1	7001228	83	10 51 969 4	18	2
607023214	403	11 27 973 6	43	1	7002475	505	10 56 183 8	11	2
607023214	406	10 55 963 5	43	1	7004512	115	10 11 834 9	32	1
607147008	403	11 27 973 6	41	1	7004512	138	92 76 408	32	1
607147008	406	10 55 963 5	41	1	7005053	8	11 92 958 8	56	1
611039214	724	10 52 155 9	21	1	7005053	196	11 24 114 0	92	3
611052614	403	11 27 973 6	61	1	7005053	480	11 31 390 8	39	2
611124514	416	61 10 526 14	1	1	7005072	451	51 24 059 14	18	2
612436814	410	10 03 610 7	11	1	7006213	108	11 21 936 9	9	1
614027114	403	11 27 973 6	74	1	7007492	107	10 59 347 4	10	1
614046114	403	11 27 973 6	81	1	7008121	153	10 14 131 6	24	4
616154114	518	91 92 528 14	21	1	7008583	480	11 31 390 8	40	2
616155214	519	61 61 541 14	4	2	7009080	284	10 14 821 5	5	1
616155414	519	61 61 541 14	10	1	7011131	236	50 04 624	2	1
616155514	519	61 61 541 14	11	1	7012971	106	11 21 993 0	29	3
6203137	404	11 27 973 6	93	1	7012971	455	11 22 473 8	31	1
6204372	411	10 53 171 8	20	2	7013116	122	92 73 644	22	1
6205239	184	11 24 448 7	13	1	7013116	125	92 78 875	22	1

Item	Sheet	Assembly	Pos.	Quantity	Item	Sheet	Assembly	Pos.	Quantity
7013456	236	50 04 624	3	1	710022201	396	90 01 376 2	64	2
7013563	393	11 94 020 8	1	1	710029801	350	93 88 500 01	18	1
7014257	30	11 28 647 6	271	1	710031014	628	54 02 704 14	10	1
7014524	195	11 24 114 0	42	5	710048501	350	93 88 500 01	17	1
7014524	311	11 24 114 6	30	4.5	710054401	396	90 01 376 2	4	1
7016208	147	10 13 802 6	106	1	710058901	396	90 01 376 2	11	2
7016208	153	10 14 131 6	106	1	710069314	486	11 26 260 6	11	1
7019733	172	70 19 834	2	1	710069314	501	11 26 261 1	11	1
7019834	167	11 22 126 8	4	1	710069514	168	11 22 127 4	20	1
7021521	292	10 14 013 6	19	1	710069514	174	10 35 161 0	20	1
7022118	159	10 13 803 4	29	2	7101008	235	10 15 529 8	5	1
7022118	451	51 24 059 14	14	1	7101021	229	10 13 845 0	3	1
7022127	168	11 22 127 4	31	1	7101021	235	10 15 529 8	7	1
7022127	177	11 21 593 6	31	1	7101021	236	50 04 624	10	1
7022127	455	11 22 473 8	28	5	7101022	60	10 56 070 1	23	4
7022315	393	11 94 020 8	2	1	7101022	195	11 24 114 0	33	1
7023459	170	10 32 489 2	4	1	710102514	202	11 24 114 1	56	4
7023828	388	51 22 991 14	1	1	710102514	718	11 31 446 3	10	2
7023833	391	11 94 017 7	3	1	710103714	195	11 24 114 0	34	1
7023834	390	11 94 017 6	5	1	710103814	85	10 51 969 5	5	4
7023835	390	11 94 017 6	11	1	710104514	8	11 92 958 8	48	1
7023837	391	11 94 017 7	10	1	710104514	626	54 02 702 14	31	2
7023838	390	11 94 017 6	1	1	710121014	380	99 04 645 14	123	1
7023839	390	11 94 017 6	2	1	714000808	438	97 07 857 03	5	1
7023847	388	51 22 991 14	905	14	714000808	681	11 89 568 6	12	1
7024273	621	51 02 322 14	111	1	714001514	8	11 92 958 8	12	1
7024275	621	51 02 322 14	113	1	714001914	20	11 29 618 6	38	2
7024277	621	51 02 322 14	115	14	714001914	702	10 51 728 1	5	1
7024282	621	51 02 322 14	117	4	714002114	620	10 51 726 2	7	1
7024427	590	99 23 398 14	30	8	720046001	397	50 20 383 01	7	22
7024502	30	11 28 647 6	170	14	720046101	397	50 20 383 01	8	12
7024503	30	11 28 647 6	171	14	721108801	356	93 36 755 01	7	1
7024504	30	11 28 647 6	172	14	725810414	633	10 55 372 1	54	2
7024631	40	51 16 576 14	4	2	726054214	460	51 33 141 14	13	1
7024968	30	11 28 647 6	224	1	726054414	39	51 33 139 14	9	1
7024981	434	10 22 506 8	12	1	726206214	685	59 21 826 14	100	3
7024982	434	10 22 506 8	90	1	726306414	703	59 20 008 14	10	1
7024983	434	10 22 506 8	91	1	726307914	39	51 33 139 14	10	1
7024987	434	10 22 506 8	71	1	726308514	685	59 21 826 14	85	1
7024996	434	10 22 506 8	15	1	726401514	65	10 56 073 3	15	1
7025006	435	70 24 996	20	1	726403201	471	96 93 178 01	89	1
7025007	435	70 24 996	23	1	726403514	41	51 05 719 14	18	1
7025009	436	10 28 999 3	59	1	726404414	192	10 58 017 0	20	4
7026135	30	11 28 647 6	269	2	726408414	41	51 05 719 14	19	1
7026676	30	11 28 647 6	203	1	726409714	191	10 57 532 2	27	1
7027205	46	11 24 519 0	60	2	726409814	60	10 56 070 1	24	3
7027205	403	11 27 973 6	50	3	726410201	471	96 93 178 01	79	1
7027205	695	10 53 246 1	37	1	726411214	94	11 24 773 5	29	3
7027205	697	10 50 775 0	32	1	7264148	396	90 01 376 2	24	1
7027665	239	10 14 671 6	10	1	726424214	629	54 02 705 14	16	1
7027755	215	10 30 300 7	3	1	726428401	471	96 93 178 01	91	1
7028143	107	10 59 347 4	5	1	726428714	60	10 56 070 1	25	2
7028151	455	11 22 473 8	26	1	726429814	111	11 26 744 7	5	1
703003014	510	11 23 820 3	28	1	726431414	191	10 57 532 2	25	2
703003014	582	11 28 610 5	6	2	726431414	191	10 57 532 2	29	1
704214114	319	11 24 409 1	20	2	726435801	396	90 01 376 2	68	1
704274808	532	51 14 755 14	70	5	726450601	471	96 93 178 01	6	2
708014114	582	11 28 610 5	4	4	726453901	396	90 01 376 2	69	1
710004514	582	11 28 610 5	5	4	726456214	380	99 04 645 14	58	1
710020114	629	54 02 705 14	15	1	726456914	39	51 33 139 14	8	1

Item	Sheet	Assembly	Pos.	Quantity	Item	Sheet	Assembly	Pos.	Quantity
726456914	703	59 20 008 14	8	1	7380106	135	98 84 402	33	1
726459414	451	51 24 059 14	12	1	7380120	120	92 74 731	28	2
726461014	446	11 89 300 5	24	2	7380177	226	11 38 961 7	4	3
726461714	385	10 55 216 1	9	2	7380291	119	10 11 835 7	19	2
7264625	236	50 04 624	1	1	7380291	120	92 74 731	19	2
726466314	86	59 21 041 14	180	1	7380297	148	10 13 802 7	39	1
726469014	627	54 02 703 14	70	1	7380297	156	10 13 803 2	39	1
726611214	483	99 26 718 14	18	4	7380297	158	10 13 803 3	31	1
726612114	202	11 24 114 1	50	4	7380297	164	10 13 452 1	21	1
726612214	511	11 23 820 3	88	4	7380348	120	92 74 731	24	2
726612214	554	11 28 397 7	13	1	7380423	235	10 15 529 8	12	1
726612214	555	11 28 397 8	13	1	7380480	471	96 93 178 01	7	1
726612214	556	11 28 399 5	13	1	7380490	153	10 14 131 6	23	2
726612214	557	11 28 399 7	13	1	7380531	136	92 68 016	44	1
726613014	584	10 59 863 3	20	1	7380566	226	11 38 961 7	6	3
726613614	195	11 24 114 0	30	4	7380566	252	10 12 948 0	12	1
726616208	633	10 55 372 1	55	2	7380566	274	10 14 736 9	7	1
726616614	633	10 55 372 1	58	10	7380566	292	10 14 013 6	20	1
726902614	321	10 57 883 5	21	4	7380574	157	10 12 226 2	18	1
726904014	77	10 58 163 4	37	1	7380576	160	10 12 226 5	27	1
726910114	77	10 58 163 4	19	3	7380586	119	10 11 835 7	22	2
726922114	593	99 48 521 14	37	2	7380586	120	92 74 731	20	2
726922214	57	10 51 961 6	13	4	7380596	122	92 73 644	81	1
7361600	122	92 73 644	21	1	7380601	162	10 13 000 5	22	1
7361600	125	92 78 875	21	1	7380601	164	10 13 452 1	22	1
7361601	109	11 06 730 4	11	1	7380605	161	10 12 987 4	22	1
7361601	122	92 73 644	37	2	7380605	202	11 24 114 1	40	1
7361961	356	93 36 755 01	28	1	7380605	275	10 14 736 4	5	1
7362091	22	11 29 618 6	603	12	7380608	160	10 12 226 5	26	1
7362091	85	10 51 969 5	614	1	7380610	159	10 13 803 4	23	2
7362091	95	11 24 773 5	314	1	7380612	122	92 73 644	65	1
7362091	448	11 89 300 5	637	2	7380648	120	92 74 731	32	10
7362451	507	91 76 658 14	3	2.5	7380648	121	90 74 418	64	5
7362546	217	11 24 114 5	55	16	7380648	122	92 73 644	64	5
7363730	505	10 56 183 8	9	2	7380653	228	10 14 768 6	8	2
7365090	195	11 24 114 0	56	6	7380653	299	10 11 557 7	9	1
7365412	65	10 56 073 3	11	1	7380656	127	90 77 464	18	1
7365616	448	11 89 300 5	653	2	7380656	138	92 76 408	18	4
7366620	434	10 22 506 8	42	1	7380657	136	92 68 016	36	1
7367776	22	11 29 618 6	613	12	7380657	307	10 14 637 4	2	1
7367776	95	11 24 773 5	603	4	7380688	268	10 14 675 3	3	2
7367776	345	10 51 969 8	610	1	7380691	163	10 13 235 7	22	1
7367776	362	10 51 968 7	611	1	7380691	165	10 13 806 8	22	1
7367776	448	11 89 300 5	621	4	7380779	256	10 13 382 3	16	2
7367776	486	11 26 260 6	704	1	7380815	119	10 11 835 7	21	4
7367776	501	11 26 261 1	704	1	7380815	120	92 74 731	21	4
7367776	528	10 51 959 1	614	1	7380865	122	92 73 644	62	1
7367776	715	10 56 173 5	702	1	7380868	122	92 73 644	70	1
7367986	24	11 29 618 6	670	3	7380868	129	92 75 443	70	1
7368242	403	11 27 973 6	52	3	7380888	120	92 74 731	56	2
7368248	404	11 27 973 6	94	1	7380888	121	90 74 418	61	1
737022103	402	11 27 970 6	12	1	7380888	122	92 73 644	61	1
7370581	434	10 22 506 8	73	1	7380935	278	10 29 998 8	2	1
7371299	30	11 28 647 6	279	2	7380955	252	10 12 948 0	9	2
7371746	434	10 22 506 8	80	1	7380970	202	11 24 114 1	41	1
7372232	392	10 65 027 0	3	1	7380970	276	10 14 967 6	7	1
7373597	451	51 24 059 14	17	2	7380986	215	10 30 300 7	12	1
7380015	120	92 74 731	22	2	7380987	160	10 12 226 5	21	1
7380070	148	10 13 802 7	33	1	7381004	137	92 73 187	70	1
7380083	286	10 14 274 2	3	1	7381013	145	10 12 224 8	23	2

Item	Sheet	Assembly	Pos.	Quantity	Item	Sheet	Assembly	Pos.	Quantity
7381013	158	10 13 803 3	23	2	7382204	252	10 12 948 0	8	2
7381056	122	92 73 644	24	1	7382212	160	10 12 226 5	23	1
7381056	125	92 78 875	24	1	7382216	14	11 41 475 7	12	1
7381082	122	92 73 644	82	1	740000208	462	11 91 872 5	1	0.4
7381087	122	92 73 644	63	1	740000208	591	99 30 800 14	20	3
7381103	122	92 73 644	60	1	740000801	319	11 24 409 1	16	2.3
7381103	302	10 12 797 9	2	1	740000908	476	99 08 357 14	4	0.624
7381127	154	10 12 352 8	21	1	7401726	398	92 76 934 01	5	1
7381127	159	10 13 803 4	21	1	7402657	507	91 76 658 14	1	1
7381128	154	10 12 352 8	20	1	7402781	212	11 24 114 4	12	1
7381128	159	10 13 803 4	22	1	7403569	385	10 55 216 1	202	3
7381182	293	10 14 511 2	11	1	7404678	480	11 31 390 8	37	4
7381225	228	10 14 768 6	14	1	7407098	528	10 51 959 1	608	8
7381225	252	10 12 948 0	13	1	7407098	620	10 51 726 2	616	2
7381292	270	10 14 588 5	21	1	7407108	95	11 24 773 5	305	1
7381292	294	10 14 622 4	12	7	7407108	362	10 51 968 7	603	1
7381367	121	90 74 418	2	1	7407108	486	11 26 260 6	707	1
7381367	122	92 73 644	94	2	7407108	501	11 26 261 1	707	1
7381438	143	10 12 321 4	12	1	740732003	414	11 26 095 7	31	1
7381439	143	10 12 321 4	11	1	7409720	22	11 29 618 6	201	1
7381440	143	10 12 321 4	10	1	7409720	95	11 24 773 5	304	2
7381442	122	92 73 644	23	1	7409720	385	10 55 216 1	200	2
7381442	125	92 78 875	23	1	7410455	24	11 29 618 6	640	2
7381446	160	10 12 226 5	22	1	7410455	448	11 89 300 5	643	8
7381457	226	11 38 961 7	7	2	7412268	45	11 24 519 0	37	2
7381457	274	10 14 736 9	17	1	7412935	215	10 30 300 7	18	1
7381457	292	10 14 013 6	21	1	7412937	215	10 30 300 7	15	1
7381526	287	10 14 274 4	4	1	7412942	215	10 30 300 7	1	1
7381593	232	10 14 201 8	7	2	7413103	467	11 89 365 0	38	12
7381615	288	10 14 601 2	9	1	7413103	478	11 89 365 1	38	12
7381628	305	10 15 028 8	38	2	7413401	177	11 21 593 6	17	2
7381629	239	10 14 671 6	5	3	7413402	177	11 21 593 6	20	1
7381629	305	10 15 028 8	39	6	7414500	455	11 22 473 8	24	3
7381630	305	10 15 028 8	42	2	744010014	462	11 91 872 5	2	1
7381631	274	10 14 736 9	14	1	744010414	476	99 08 357 14	5	2
7381631	274	10 14 736 9	16	1	744011114	317	11 24 409 1	12	5
7381631	305	10 15 028 8	43	1	745120514	640	99 10 116 14	20	2
7381635	305	10 15 028 8	41	3	745128314	627	54 02 703 14	40	1
7381638	14	11 41 475 7	9	2	745141001	396	90 01 376 2	66	1
7381638	252	10 12 948 0	11	1	745141814	98	11 24 682 0	280	6
7381638	276	10 14 967 6	13	1	745194714	629	54 02 705 14	12	1
7381638	299	10 11 557 7	10	2	745906614	627	54 02 703 14	6	1
7381638	307	10 14 637 4	4	1	745907514	628	54 02 704 14	23	1
7381685	255	10 13 394 7	4	1	746001701	350	93 88 500 01	16	1
7381699	147	10 13 802 6	30	21	746171514	361	10 51 968 6	18	2
7381770	305	10 15 028 8	32	4	7462008	396	90 01 376 2	12	1
7381771	305	10 15 028 8	31	1	746224201	396	90 01 376 2	3	1
7381779	228	10 14 768 6	7	2	746225801	471	96 93 178 01	4	1
7381779	288	10 14 601 2	5	2	746310401	474	94 44 065 03	5	2
7382004	217	11 24 114 5	59	1	746413001	473	94 44 048 03	5	2
7382059	254	10 13 394 5	5	1	746506601	472	94 44 043 03	5	2
7382069	226	11 38 961 7	8	1	746911614	581	11 28 629 9	18	4
7382085	305	10 15 028 8	40	2	746913614	666	11 23 619 7	17	1
7382088	270	10 14 588 5	15	1	746923314	188	11 24 113 8	21	2
7382090	305	10 15 028 8	37	5	746925314	703	59 20 008 14	13	1
7382092	305	10 15 028 8	47	2	746925314	703	59 20 008 14	14	1
7382149	127	90 77 464	34	1	7469905	119	10 11 835 7	64	2
7382167	130	98 89 984	31	24	7469905	135	98 84 402	32	1
7382167	133	98 89 983	31	24	747401901	396	90 01 376 2	71	1
7382203	307	10 14 637 4	5	2	747462814	628	54 02 704 14	20	1

Item	Sheet	Assembly	Pos.	Quantity	Item	Sheet	Assembly	Pos.	Quantity
749073614	685	59 21 826 14	90	1	773920008	584	10 59 863 3	26	6
750001114	505	10 56 183 8	7	1	773920008	597	11 25 204 2	13	4
750003414	505	10 56 183 8	8	1	773930114	505	10 56 183 8	19	1
761001103	471	96 93 178 01	72	1	773930114	618	10 51 743 9	13	1
7610021	471	96 93 178 01	12	1	773935814	666	11 23 619 7	28	4
761008703	471	96 93 178 01	3	1	773939214	462	11 91 872 5	3	1
7610225	356	93 36 755 01	14	1	773939214	591	99 30 800 14	15	1
7610225	398	92 76 934 01	6	1	773941308	358	99 23 387 14	11	1
761022903	356	93 36 755 01	2	1	773954514	504	10 56 187 5	94	2
761022903	356	93 36 755 01	21	1	773954714	476	99 08 357 14	3	2
7610244	471	96 93 178 01	2	1	773967214	476	99 08 357 14	2	4
761032203	396	90 01 376 2	73	1	774204914	195	11 24 114 0	55	6
7615441	41	51 05 719 14	1	1	774204914	212	11 24 114 4	15	1
7615603	455	11 22 473 8	8	1	774204914	217	11 24 114 5	51	14
7615604	455	11 22 473 8	9	1	774206408	195	11 24 114 0	52	4
7615720	421	10 22 645 4	2	1	774209908	207	11 24 114 2	31	2
7617268	26	11 29 618 6	703	13	774212914	94	11 24 773 5	31	2
7617268	85	10 51 969 5	612	1	774214308	702	10 51 728 1	8	1
7617268	95	11 24 773 5	676	3	774217108	207	11 24 114 2	34	1
7617268	362	10 51 968 7	613	1	774218808	195	11 24 114 0	53	9
7617268	448	11 89 300 5	628	6	774241914	207	11 24 114 2	32	1
7617268	702	10 51 728 1	602	3	774247214	207	11 24 114 2	33	2
7617354	85	10 51 969 5	611	1	774255714	195	11 24 114 0	54	4
7617354	448	11 89 300 5	634	11	774256114	191	10 57 532 2	52	2
7617354	528	10 51 959 1	611	7	774301101	624	59 20 694 14	65	1
7617354	661	10 51 971 2	702	4	774322101	396	90 01 376 2	77	2
7617354	690	10 55 459 4	601	1	7743242	82	99 23 451 14	5	2
7617354	702	10 51 728 1	608	1	7743242	349	96 96 248 01	18	1
7617460	26	11 29 618 6	705	1	7743242	538	11 24 444 4	16	2
7617460	85	10 51 969 5	613	1	7743242	681	11 89 568 6	18	4
7617460	448	11 89 300 5	635	2	774730714	358	99 23 387 14	12	40
7617460	528	10 51 959 1	626	2	774760214	645	97 05 997 03	1	6
7617461	24	11 29 618 6	673	3	774760314	645	97 05 997 03	4	6
7617461	85	10 51 969 5	600	1	774760414	645	97 05 997 03	3	6
7617461	448	11 89 300 5	633	3	774760514	645	97 05 997 03	2	8
7617461	528	10 51 959 1	623	2	774762314	618	10 51 743 9	11	1
7617461	661	10 51 971 2	700	2	779002114	402	11 27 970 6	43	1
7617494	24	11 29 618 6	678	2	779006601	396	90 01 376 2	89	1
7617494	95	11 24 773 5	303	1	779006901	471	96 93 178 01	85	1
7617520	436	10 28 999 3	51	2	779009008	264	10 13 508 0	8	1
7621780	345	10 51 969 8	7	1	779014014	315	11 24 409 0	65	2
7621780	659	11 26 901 8	14	1	779016201	396	90 01 376 2	88	1
7621827	8	11 92 958 8	36	1	779016414	633	10 55 372 1	57	4
7622060	486	11 26 260 6	712	2	779016501	471	96 93 178 01	84	1
7622060	501	11 26 261 1	712	2	789000701	349	96 96 248 01	34	1
7623374	361	10 51 968 6	31	16	789011714	2	01 38 376 14	13	1
7623541	30	11 28 647 6	204	1	789038114	505	10 56 183 8	15	1
773193414	510	11 23 820 3	39	1	790036914	505	10 56 183 8	12	1
773193414	521	10 58 193 7	23	1	790042214	505	10 56 183 8	5	1
773194314	510	11 23 820 3	40	2	790042514	505	10 56 183 8	2	1
773195214	343	10 51 969 7	317	1	790042914	505	10 56 183 8	6	1
773195214	618	10 51 743 9	317	1	790202014	590	99 23 398 14	10	10
773195614	343	10 51 969 7	460	2	790202014	593	99 48 521 14	22	1
773195614	618	10 51 743 9	460	2	790202014	598	91 89 071 14	1	1
773400308	46	11 24 519 0	73	0.25	790208814	191	10 57 532 2	51	6
773400308	584	10 59 863 3	25	0.9	790212314	77	10 58 163 4	39	2
773400308	597	11 25 204 2	12	0.62	790227714	20	11 29 618 6	32	1
773400314	640	99 10 116 14	22	2	790230014	702	10 51 728 1	9	2
773400508	637	11 27 109 7	18	0.6	790230614	703	59 20 008 14	900	1
773910114	637	11 27 109 7	19	2	790244814	11	11 92 891 3	12	2

Item	Sheet	Assembly	Pos.	Quantity	Item	Sheet	Assembly	Pos.	Quantity
790244814	217	11 24 114 5	53	1	811202114	117	10 11 835 0	104	1
790259414	620	10 51 726 2	612	1	811202114	126	10 13 975 2	104	1
790269114	504	10 56 187 5	93	1	811202114	235	10 15 529 8	105	1
790282814	598	91 89 071 14	2	1	811202114	280	10 14 286 0	105	1
790295414	380	99 04 645 14	61	2	811208201	153	10 14 131 6	118	1
790306414	77	10 58 163 4	64	1	8627609	235	10 15 529 8	109	1
790311914	94	11 24 773 5	30	1	8655016	119	10 11 835 7	105	1
790319114	718	11 31 446 3	3	1	8655016	120	92 74 731	105	1
790346614	98	11 24 682 0	120	1	8655016	153	10 14 131 6	105	1
790347014	98	11 24 682 0	330	1	8655016	257	10 14 294 2	105	1
790347114	98	11 24 682 0	550	11	8655016	296	10 12 037 2	109	1
790347214	98	11 24 682 0	560	1	8655023	117	10 11 835 0	118	1
790353814	716	51 03 361 14	6	1	8655023	226	11 38 961 7	104	1
790353914	716	51 03 361 14	990	1	8655032	119	10 11 835 7	119	1
790354014	716	51 03 361 14	9	1	8700012	134	98 89 832	106	1
790354114	716	51 03 361 14	5	1	883203014	188	11 24 113 8	73	2
790365114	666	11 23 619 7	29	1	885040114	505	10 56 183 8	13	1
790386214	3	01 38 376 14	129	1	885045214	505	10 56 183 8	18	1
790403714	98	11 24 682 0	40	1	885380314	504	10 56 187 5	55	1
790403914	98	11 24 682 0	310	1	885391814	504	10 56 187 5	50	1
790407714	86	59 21 041 14	900	1	885392414	504	10 56 187 5	45	1
790407814	669	59 21 042 14	900	1	885400114	505	10 56 183 8	14	1
790411214	3	01 38 376 14	133	1	885602114	505	10 56 183 8	4	1
790413614	33	59 23 090 14	990	1	886002814	218	11 24 114 5	68	1
790422414	593	99 48 521 14	50	1	890035314	315	11 24 409 0	59	21
790444514	380	99 04 645 14	65	1	890100814	75	92 65 477 14	10	1
790453814	22	11 29 618 6	614	1	90013762	382	10 51 968 2	10	2
790453814	95	11 24 773 5	648	3	90022085	396	90 01 376 2	15	1
790512314	581	11 28 629 9	5	1	9072435	127	90 77 464	12	1
790512414	581	11 28 629 9	4	1	9072436	127	90 77 464	70	1
790517014	3	01 38 376 14	122	1	9072437	128	90 72 436	10	1
790517214	3	01 38 376 14	121	1	9072438	128	90 72 436	11	1
790519814	77	10 58 163 4	11	2	9072439	128	90 72 436	12	1
790520514	3	01 38 376 14	141	1	9072440	128	90 72 436	13	1
790523314	467	11 89 365 0	15	2	9072633	256	10 13 382 3	14	1
790523314	478	11 89 365 1	15	2	9072904	279	90 72 906	1	1
790538014	645	97 05 997 03	9	2	9072906	224	12 42 545 4	331	1
790545514	31	59 20 707 14	900	1	9072907	279	90 72 906	2	1
790545514	32	59 23 006 14	900	1	9072908	279	90 72 906	3	1
790549214	319	11 24 409 1	15	9	9072969	160	10 12 226 5	13	1
790549314	321	10 57 883 5	9	1	9073189	14	11 41 475 7	13	1
790549314	323	10 57 897 6	9	1	9073190	14	11 41 475 7	11	1
790549314	325	10 57 940 0	11	1	9073827	119	10 11 835 7	15	1
790549314	326	10 56 623 7	11	1	9074307	128	90 72 436	31	1
790549314	327	10 56 580 8	9	1	9074308	128	90 72 436	32	1
790550914	321	10 57 883 5	15	1	9074332	128	90 72 436	33	1
790550914	323	10 57 897 6	13	1	9074418	115	10 11 834 9	4	2
790550914	325	10 57 940 0	4	1	9074798	299	10 11 557 7	3	2
790550914	326	10 56 623 7	4	1	9075894	131	98 89 833	1	1
790550914	327	10 56 580 8	13	1	9076176	157	10 12 226 2	13	1
790562114	8	11 92 958 8	45	2	9076178	157	10 12 226 2	12	2
790563914	451	51 24 059 14	10	1	9076196	151	10 12 224 5	18	1
790579314	30	11 28 647 6	131	15	9076458	223	12 42 545 4	51	1
790579414	30	11 28 647 6	902	1	9076531	306	10 14 297 7	10	2
797027814	666	11 23 619 7	23	1	9076550	306	10 14 297 7	11	1
797029114	321	10 57 883 5	7	1	9076621	270	10 14 588 5	4	1
797029114	323	10 57 897 6	7	1	9077164	294	10 14 622 4	14	1
797029114	325	10 57 940 0	5	1	9077401	160	10 12 226 5	28	1
797029114	326	10 56 623 7	5	1	9077464	126	10 13 975 2	1	2
797029114	327	10 56 580 8	7	1	9078214	146	10 13 802 5	3	1

Item	Sheet	Assembly	Pos.	Quantity	Item	Sheet	Assembly	Pos.	Quantity
9078249	225	12 42 545 4	650	1	918870914	347	99 33 241 14	826	1
9078301	225	12 42 545 4	654	1	918873814	55	11 26 995 4	556	1
9078314	224	12 42 545 4	260	1	918874514	186	11 24 113 7	432	1
9078522	246	11 44 800 5	6	2	918882614	347	99 33 241 14	824	1
9079130	300	10 11 912 8	2	1	918907114	3	01 38 376 14	116	1
9079823	224	12 42 545 4	480	1	918975514	51	10 56 645 8	21	1
9079870	223	12 42 545 4	110	6	919014814	640	99 10 116 14	23	1
9080466	285	10 14 821 7	3	5	919017314	640	99 10 116 14	24	1
9080660	235	10 15 529 8	6	1	919022714	640	99 10 116 14	25	1
9080911	277	90 78 314	4	1	919023914	504	10 56 187 5	29	1
910353714	581	11 28 629 9	8	2	919058414	538	11 24 444 4	11	1
911108414	488	11 26 260 9	605	1	919058414	616	11 21 552 4	11	1
911256414	56	11 26 995 4	596	1	919075014	593	99 48 521 14	2	1
911292114	464	11 89 300 1	138	1	919126414	674	99 27 747 14	364	1
9132577	291	10 14 737 0	2	4	919126414	674	99 27 747 14	365	1
9132577	305	10 15 028 8	93	1	919127514	88	10 54 545 1	708	1
9140351	292	10 14 013 6	26	1	919140514	54	11 26 995 4	533	1
9144757	248	10 12 653 5	4	1	919143414	185	11 24 113 7	421	1
9144762	249	91 44 757	3	1	919144714	679	11 24 779 0	181	1
914690714	370	99 29 258 14	4	12	919145114	726	11 28 825 7	805	1
914690714	538	11 24 444 4	13	13	919146814	54	11 26 995 4	543	1
914757914	185	11 24 113 7	404	1	919167714	185	11 24 113 7	422	1
914762914	56	11 26 995 4	592	1	919252814	515	11 90 150 9	31	1
914763014	364	10 55 208 5	655	1	919279914	590	99 23 398 14	11	3
914792514	56	11 26 995 4	5022	1	919421714	641	99 23 405 14	8	2
914794514	55	11 26 995 4	575	1	919515414	716	51 03 361 14	3	1
914798914	55	11 26 995 4	551	1	919617914	582	11 28 610 5	1	2
914941914	640	99 10 116 14	13	4	919706714	54	11 26 995 4	527	1
915523714	590	99 23 398 14	12	1	919714914	55	11 26 995 4	581	1
915523714	640	99 10 116 14	12	1	919735014	54	11 26 995 4	524	1
916183314	511	11 23 820 3	78	1	919736714	679	11 24 779 0	185	1
916525114	403	11 27 973 6	31	1	919736714	679	11 24 779 0	186	1
916526414	191	10 57 532 2	13	1	919757114	502	11 26 261 2	635	1
916793914	81	10 56 069 4	1	2	919778814	534	11 22 970 6	902	1
917585714	406	10 55 963 5	51	1	919791614	88	10 54 545 1	706	1
917665814	504	10 56 187 5	31	1	919796414	717	11 89 549 1	497	1
9177947	191	10 57 532 2	28	1	919956014	581	11 28 629 9	2	2
917906414	690	10 55 459 4	3	1	919956114	581	11 28 629 9	3	2
917906414	702	10 51 728 1	4	1	926547714	74	10 57 884 5	10	1
918245214	186	11 24 113 7	572	1	9266085	125	92 78 875	12	1
918248414	663	11 22 970 9	280	1	9266088	125	92 78 875	14	1
918269214	186	11 24 113 7	430	1	9266680	119	10 11 835 7	18	2
918272514	464	11 89 300 1	127	1	9266847	237	10 14 591 9	1	1
918276114	463	11 89 300 1	113	1	9267340	118	92 67 343	10	1
918276114	463	11 89 300 1	117	1	9267341	118	92 67 343	11	1
918285814	56	11 26 995 4	598	1	9267342	118	92 67 343	12	1
918288114	463	11 89 300 1	112	1	9267343	117	10 11 835 0	6	2
918288114	463	11 89 300 1	116	1	9268016	116	10 11 834 9	96	1
918291914	53	11 26 995 4	429	1	9268016	138	92 76 408	96	1
918365114	46	11 24 519 0	91	1	9268423	115	10 11 834 9	13	1
918539614	361	10 51 968 6	17	1	9268441	122	92 73 644	8	3
918585114	77	10 58 163 4	22	2	9268441	153	10 14 131 6	8	5
918678214	618	10 51 743 9	29	1	9268441	159	10 13 803 4	8	5
918805114	88	10 54 545 1	707	1	9271340	11	11 92 891 3	10	1
918810914	56	11 26 995 4	595	1	9271340	274	10 14 736 9	13	1
918819414	394	10 56 178 0	380	1	9271963	718	11 31 446 3	11	2
918819614	717	11 89 549 1	498	1	9273187	116	10 11 834 9	97	1
918820914	465	11 89 300 1	162	1	9273271	257	10 14 294 2	2	2
918849914	622	10 52 439 2	827	1	9273644	115	10 11 834 9	89	1
918870314	534	11 22 970 6	903	1	9273644	121	90 74 418	90	1

Item	Sheet	Assembly	Pos.	Quantity	Item	Sheet	Assembly	Pos.	Quantity
9274731	117	10 11 835 0	91	1	928166714	534	11 22 970 6	909	1
9275003	119	10 11 835 7	20	8	928166714	534	11 22 970 6	913	1
927501901	356	93 36 755 01	13	1	928169614	464	11 89 300 1	151	1
927509501	396	90 01 376 2	13	1	928169614	465	11 89 300 1	159	1
927509601	396	90 01 376 2	14	1	928183014	53	11 26 995 4	506	1
927521808	595	97 14 959 03	36	1	928204714	663	11 22 970 9	278	1
9275428	122	92 73 644	76	1	928209814	463	11 89 300 1	102	1
9275428	129	92 75 443	76	1	928209814	463	11 89 300 1	107	1
9275429	129	92 75 443	72	1	928265514	463	11 89 300 1	111	1
9275443	115	10 11 834 9	85	1	928265514	463	11 89 300 1	115	1
927562201	396	90 01 376 2	1	1	928266514	185	11 24 113 7	403	1
927562301	396	90 01 376 2	5	1	928272714	185	11 24 113 7	411	1
927562601	396	90 01 376 2	20	5	928318214	520	11 23 239 9	802	1
927562801	396	90 01 376 2	25	1	928318214	520	11 23 239 9	807	1
927562901	396	90 01 376 2	30	1	928326514	347	99 33 241 14	825	1
927563901	396	90 01 376 2	65	1	928357214	55	11 26 995 4	585	1
927564001	396	90 01 376 2	70	1	928443714	53	11 26 995 4	522	1
927564101	396	90 01 376 2	85	1	928445414	54	11 26 995 4	536	1
927586201	356	93 36 755 01	12	1	928456714	54	11 26 995 4	526	1
927586201	356	93 36 755 01	27	1	928461114	54	11 26 995 4	525	1
927596701	396	90 01 376 2	40	3	928536514	488	11 26 260 9	606	1
927597201	396	90 01 376 2	35	1	928538414	88	10 54 545 1	704	1
927597301	396	90 01 376 2	45	1	928538414	464	11 89 300 1	139	1
927610201	356	93 36 755 01	15	1	928589814	53	11 26 995 4	431	1
9276385	115	10 11 834 9	11	1	928591114	88	10 54 545 1	703	1
9276408	116	10 11 834 9	98	1	928611014	186	11 24 113 7	435	1
927651401	396	90 01 376 2	50	1	928619114	674	99 27 747 14	360	1
927651501	396	90 01 376 2	55	3	928712614	56	11 26 995 4	597	1
927651701	396	90 01 376 2	60	1	928757814	9	11 92 982 1	200	1
9276860	115	10 11 834 9	37	2	928763814	534	11 22 970 6	908	1
9276860	138	92 76 408	37	2	928763814	534	11 22 970 6	912	1
927693401	396	90 01 376 2	95	1	928764814	54	11 26 995 4	548	1
927739401	356	93 36 755 01	1	1	928765014	53	11 26 995 4	508	1
927739401	356	93 36 755 01	20	1	928815314	506	91 90 239 14	295	1
9278873	125	92 78 875	11	1	928857314	185	11 24 113 7	407	1
9278874	125	92 78 875	10	1	928861314	347	99 33 241 14	823	1
9278875	124	10 11 836 7	1	1	928865914	464	11 89 300 1	154	1
9278876	125	92 78 875	13	1	928865914	465	11 89 300 1	158	1
928003714	465	11 89 300 1	163	1	928868414	185	11 24 113 7	418	1
928009314	53	11 26 995 4	428	1	928872514	463	11 89 300 1	103	1
928010214	53	11 26 995 4	511	1	928872814	463	11 89 300 1	108	1
928010214	53	11 26 995 4	512	1	928880614	185	11 24 113 7	427	1
928010214	53	11 26 995 4	513	1	928885614	55	11 26 995 4	559	1
928010214	53	11 26 995 4	514	1	928950414	364	10 55 208 5	656	1
928014714	534	11 22 970 6	904	1	928973314	464	11 89 300 1	150	1
928018514	54	11 26 995 4	542	1	928973314	464	11 89 300 1	156	1
928020314	54	11 26 995 4	546	1	929376814	88	10 54 545 1	705	1
928029714	534	11 22 970 6	906	1	929399714	465	11 89 300 1	166	1
928029714	534	11 22 970 6	914	1	929414814	55	11 26 995 4	555	1
928032214	54	11 26 995 4	547	1	929443814	9	11 92 982 1	201	1
928044014	394	10 56 178 0	390	1	929443814	622	10 52 439 2	828	1
928110014	55	11 26 995 4	584	1	929467714	464	11 89 300 1	153	1
928113314	394	10 56 178 0	381	1	929467714	464	11 89 300 1	157	1
928121514	534	11 22 970 6	917	1	929473314	55	11 26 995 4	582	1
928123014	55	11 26 995 4	580	1	929478114	185	11 24 113 7	420	1
928130914	213	11 24 972 9	800	1	929796914	620	10 51 726 2	6	1
928130914	213	11 24 972 9	801	1	932037701	350	93 88 500 01	35	1
928137514	463	11 89 300 1	122	1	933675501	349	96 96 248 01	10	1
928137714	88	10 54 545 1	702	1	933676601	356	93 36 755 01	23	1
928152414	463	11 89 300 1	118	1	933676701	356	93 36 755 01	5	1

Item	Sheet	Assembly	Pos.	Quantity	Item	Sheet	Assembly	Pos.	Quantity
938585201	396	90 01 376 2	10	1	949174814	593	99 48 521 14	26	2
938849701	349	96 96 248 01	5	1	949196514	370	99 29 258 14	8	2
938850001	349	96 96 248 01	1	1	949196614	561	11 93 703 7	12	2
938850101	350	93 88 500 01	1	1	949196614	570	11 93 702 0	12	2
938850201	350	93 88 500 01	5	1	949341514	20	11 29 618 6	45	1
938858501	357	96 96 543 01	5	1	949351814	643	99 23 420 14	5	4
938858701	357	96 96 543 01	10	2	949351814	666	11 23 619 7	10	1
939347801	396	90 01 376 2	97	1	949352914	370	99 29 258 14	12	4
939347901	396	90 01 376 2	98	1	949389914	538	11 24 444 4	12	2
939348001	396	90 01 376 2	99	1	949401114	333	11 24 483 7	16	1
939554301	350	93 88 500 01	20	1	949724114	590	99 23 398 14	23	2
939556201	350	93 88 500 01	15	1	949740514	83	10 51 969 4	15	20
939556301	350	93 88 500 01	9	1	949740614	640	99 10 116 14	11	10
939589501	354	50 20 372 01	1	1	949758314	333	11 24 483 7	24	1
939589601	354	50 20 372 01	2	1	949892214	361	10 51 968 6	20	1
939589701	354	50 20 372 01	3	1	949910614	570	11 93 702 0	10	1
939662601	510	11 23 820 3	26	1	949910714	561	11 93 703 7	10	1
9402377	524	11 26 694 5	10	4	949911014	581	11 28 629 9	7	4
942264714	60	10 56 070 1	21	2	949942814	561	11 93 703 7	16	4
942594714	640	99 10 116 14	26	2	949942814	570	11 93 702 0	16	4
942804914	593	99 48 521 14	10	2	949942814	581	11 28 629 9	39	4
943958914	20	11 29 618 6	30	1	949946714	581	11 28 629 9	13	2
943958914	513	10 51 826 1	5	1	949988214	590	99 23 398 14	19	2
944112203	396	90 01 376 2	51	1	950102914	591	99 30 800 14	16	1
944137814	94	11 24 773 5	24	1	950143914	590	99 23 398 14	37	2
944169103	396	90 01 376 2	36	1	950387314	633	10 55 372 1	59	10
944215103	398	92 76 934 01	1	1	950490414	554	11 28 397 7	11	1
944228903	396	90 01 376 2	16	1	950490414	555	11 28 397 8	11	1
944378403	471	96 93 178 01	40	1	950581614	510	11 23 820 3	11	4
944378903	471	96 93 178 01	60	1	950581614	550	11 28 726 4	10	1
944403703	471	96 93 178 01	8	1	950610714	664	99 35 606 14	10	2
944403803	471	96 93 178 01	10	1	950663614	83	10 51 969 4	17	2
944403903	471	96 93 178 01	15	1	953305103	640	99 10 116 14	27	1
944404303	471	96 93 178 01	18	5	953466003	192	10 58 017 0	10	1
944404403	472	94 44 043 03	1	1	953580303	442	99 18 041 14	10	1
944404503	471	96 93 178 01	20	1	954229003	335	11 24 483 7	101	1
944404603	471	96 93 178 01	25	1	954372503	480	11 31 390 8	14	4
944404803	471	96 93 178 01	28	3	954373603	467	11 89 365 0	31	2
944404903	473	94 44 048 03	1	1	954373603	478	11 89 365 1	31	2
944405203	471	96 93 178 01	30	1	954398703	18	11 24 047 9	60	2
944405903	471	96 93 178 01	70	1	954398803	581	11 28 629 9	15	2
944406203	471	96 93 178 01	75	1	954432003	497	11 22 050 0	17	10
944406403	471	96 93 178 01	35	1	954432003	503	11 22 050 1	17	10
944406503	471	96 93 178 01	38	3	954485303	335	11 24 483 7	64	1
944406603	474	94 44 065 03	1	1	954486503	497	11 22 050 0	18	6
944406703	471	96 93 178 01	65	1	954486503	503	11 22 050 1	18	6
944434703	471	96 93 178 01	48	3	954560603	521	10 58 193 7	15	2
944434903	471	96 93 178 01	50	1	954584908	467	11 89 365 0	17	144
944672614	20	11 29 618 6	42	1	954584908	478	11 89 365 1	17	144
944813514	94	11 24 773 5	25	1	954598503	333	11 24 483 7	12	2
946293614	20	11 29 618 6	9	1	954598503	343	10 51 969 7	13	1
946294214	20	11 29 618 6	25	1	956009714	333	11 24 483 7	10	1
947084514	341	99 29 803 14	22	12	956009714	510	11 23 820 3	35	2
9477429	126	10 13 975 2	18	1	956009714	551	11 28 725 5	11	2
9477439	117	10 11 835 0	13	2	956033214	582	11 28 610 5	3	2
948282314	79	10 56 067 3	6	1	956049414	640	99 10 116 14	21	4
948545514	640	99 10 116 14	39	2	956064714	593	99 48 521 14	7	2
948773814	541	99 14 137 14	5	16	956067414	593	99 48 521 14	5	2
948959414	593	99 48 521 14	31	4	956067614	593	99 48 521 14	3	1
948967314	585	11 28 357 6	3	4	956070214	593	99 48 521 14	9	1

Item	Sheet	Assembly	Pos.	Quantity	Item	Sheet	Assembly	Pos.	Quantity
956070514	593	99 48 521 14	4	2	959835714	687	11 89 568 8	12	4
956070614	593	99 48 521 14	6	2	959841114	538	11 24 444 4	39	4
956092714	593	99 48 521 14	25	2	959841814	538	11 24 444 4	25	2
956213814	590	99 23 398 14	22	1	959866614	370	99 29 258 14	7	1
956266614	540	91 90 584 14	1	1	959869314	370	99 29 258 14	3	3
956266714	540	91 90 584 14	2	1	959912014	341	99 29 803 14	11	6
956266814	540	91 90 584 14	3	1	959912114	341	99 29 803 14	12	6
956274314	20	11 29 618 6	28	4	959912214	341	99 29 803 14	13	6
956319314	593	99 48 521 14	30	4	959912514	341	99 29 803 14	15	12
956378214	510	11 23 820 3	27	2	959912614	341	99 29 803 14	16	6
956385814	217	11 24 114 5	45	2	959912714	341	99 29 803 14	17	6
956507814	692	11 23 626 6	10	1	959921514	542	99 26 417 14	12	8
956711314	660	10 51 971 3	23	8	959921514	588	99 24 594 14	17	4
956802414	590	99 23 398 14	13	1	967216103	618	10 51 743 9	14	2
956802514	590	99 23 398 14	14	1	967216303	623	96 72 161 03	2	1
956803214	590	99 23 398 14	32	2	967217003	623	96 72 161 03	1	1
956803414	590	99 23 398 14	16	2	967313703	333	11 24 483 7	25	1
956803514	590	99 23 398 14	24	2	968523914	77	10 58 163 4	27	1
956803714	590	99 23 398 14	25	2	969317801	467	11 89 365 0	6	1
956805314	590	99 23 398 14	17	2	969317801	478	11 89 365 1	6	1
956805414	590	99 23 398 14	18	2	969329314	20	11 29 618 6	40	1
956809314	590	99 23 398 14	36	2	969329314	715	10 56 173 5	40	1
956809514	590	99 23 398 14	21	1	969392201	471	96 93 178 01	45	1
956810314	590	99 23 398 14	26	1	969624801	343	10 51 969 7	10	1
956847814	582	11 28 610 5	2	2	969641401	357	96 96 543 01	40	1
957336914	581	11 28 629 9	17	1	969641501	357	96 96 543 01	50	1
957831614	340	10 52 656 0	10	4	969654301	349	96 96 248 01	20	1
958097914	483	99 26 718 14	10	2	969655301	357	96 96 543 01	1	1
958214314	585	11 28 357 6	2	1	970588503	18	11 24 047 9	61	2
958471514	321	10 57 883 5	17	1	970591503	643	99 23 420 14	1	4
958471514	323	10 57 897 6	17	1	970599703	3	01 38 376 14	619	1
958471514	325	10 57 940 0	6	1	970720403	583	99 06 461 14	970	1
958471514	326	10 56 623 7	6	1	970726703	497	11 22 050 0	19	4
958471514	327	10 56 580 8	14	1	970726703	503	11 22 050 1	19	4
958471614	321	10 57 883 5	18	1	970785703	402	11 27 970 6	44	1
958471614	323	10 57 897 6	18	1	970827603	370	99 29 258 14	9	1
958471614	325	10 57 940 0	7	1	970831503	510	11 23 820 3	14	2
958471614	326	10 56 623 7	7	1	970854303	581	11 28 629 9	16	2
958471614	327	10 56 580 8	15	1	970855603	541	99 14 137 14	6	2
958478414	315	11 24 409 0	56	2	970857103	313	11 24 409 0	32	1
958478414	329	10 54 591 0	10	10	970859103	538	11 24 444 4	40	4
958478414	483	99 26 718 14	15	4	970901603	640	99 10 116 14	14	2
958478414	636	11 24 575 5	5	2	970961303	640	99 10 116 14	19	1
958908914	521	10 58 193 7	17	1	971230303	633	10 55 372 1	60	10
959001414	370	99 29 258 14	10	1	971303203	510	11 23 820 3	34	1
959019014	64	10 56 073 2	11	3	971303203	551	11 28 725 5	10	1
959332514	511	11 23 820 3	90	1	971304903	476	99 08 357 14	1	2
959465714	313	11 24 409 0	38	2	971323803	640	99 10 116 14	28	1
959465714	705	11 93 621 2	17	1	971333403	467	11 89 365 0	13	1
959571914	660	10 51 971 3	14	2	971333403	478	11 89 365 1	13	1
959575714	522	99 30 060 14	12	4	971333503	467	11 89 365 0	20	3
959575714	560	99 24 404 14	12	4	971333503	478	11 89 365 1	20	3
959575714	569	99 24 405 14	12	4	971361703	361	10 51 968 6	19	1
959575714	576	99 24 406 14	12	8	971363403	511	11 23 820 3	93	1
959575714	588	99 24 594 14	12	4	971460103	4	01 38 376 14	651	1
959576314	421	10 22 645 4	100	1	971495903	593	99 48 521 14	29	1
959643514	581	11 28 629 9	11	4	971508203	593	99 48 521 14	11	1
959712214	82	99 23 451 14	1	2	979323301	356	93 36 755 01	30	1
959712714	711	10 52 293 0	21	1	979896808	211	11 24 114 3	30	2
959799614	660	10 51 971 3	27	8	981809914	4	01 38 376 14	999	1

Item	Sheet	Assembly	Pos.	Quantity	Item	Sheet	Assembly	Pos.	Quantity
981953714	4	01 38 376 14	992	1	990954814	510	11 23 820 3	31	2
981967114	621	51 02 322 14	990	1	991011614	3	01 38 376 14	605	1
9874345	18	11 24 047 9	12	1	991011714	640	99 10 116 14	10	1
9881114	119	10 11 835 7	33	2	991011914	640	99 10 116 14	40	2
9881609	153	10 14 131 6	7	2	991012214	640	99 10 116 14	41	2
9881609	158	10 13 803 3	8	2	991012214	642	99 10 125 14	2	1
9881609	159	10 13 803 4	7	2	991012514	641	99 23 405 14	2	4
9882207	115	10 11 834 9	15	2	991012614	642	99 10 125 14	1	1
9882207	138	92 76 408	15	2	991109014	663	11 22 970 9	282	1
9884402	116	10 11 834 9	95	1	991109014	663	11 22 970 9	283	1
9885628	136	92 68 016	17	1	991139814	185	11 24 113 7	401	1
9885660	117	10 11 835 0	16	2	991168714	53	11 26 995 4	509	1
9885661	117	10 11 835 0	17	2	991170814	364	10 55 208 5	652	1
9885924	130	98 89 984	39	1	991194914	186	11 24 113 7	628	1
9885924	133	98 89 983	39	1	991195514	622	10 52 439 2	367	1
9885937	147	10 13 802 6	29	1	991198814	520	11 23 239 9	810	1
9886591	252	10 12 948 0	6	1	991198814	520	11 23 239 9	811	1
9886756	252	10 12 948 0	7	1	991205314	622	10 52 439 2	364	1
9887035	131	98 89 833	2	1	991209514	56	11 26 995 4	5020	1
9887828	117	10 11 835 0	14	2	991216914	185	11 24 113 7	405	1
9887948	150	10 14 360 7	14	2	991242714	534	11 22 970 6	915	1
9888133	126	10 13 975 2	19	1	991253814	55	11 26 995 4	579	1
9889809	126	10 13 975 2	15	1	991276414	464	11 89 300 1	136	1
9889809	130	98 89 984	15	1	991276414	464	11 89 300 1	144	1
9889809	133	98 89 983	15	1	991285814	534	11 22 970 6	918	1
9889831	130	98 89 984	1	9	991312114	464	11 89 300 1	152	1
9889831	133	98 89 983	1	1	991312114	464	11 89 300 1	155	1
9889832	133	98 89 983	2	1	991375814	56	11 26 995 4	587	1
9889833	130	98 89 984	2	1	991384314	394	10 56 178 0	388	1
9889929	132	98 89 988	1	1	991390514	186	11 24 113 7	570	1
9889930	132	98 89 988	2	1	991391814	488	11 26 260 9	602	1
9889977	116	10 11 834 9	93	1	991413714	538	11 24 444 4	32	1
9889983	116	10 11 834 9	94	1	991413814	541	99 14 137 14	1	1
9889984	116	10 11 834 9	92	1	991487414	20	11 29 618 6	26	1
9889988	130	98 89 984	14	1	991528514	55	11 26 995 4	586	1
9889988	133	98 89 983	14	1	991547014	185	11 24 113 7	419	1
990038114	55	11 26 995 4	583	1	991563114	520	11 23 239 9	812	1
990045814	464	11 89 300 1	135	1	991563114	520	11 23 239 9	817	1
990045814	464	11 89 300 1	145	1	991587514	186	11 24 113 7	552	1
990053014	185	11 24 113 7	408	1	991606114	18	11 24 047 9	63	1
990055814	674	99 27 747 14	361	1	991804114	441	10 51 969 6	13	1
990055914	674	99 27 747 14	362	1	991867414	20	11 29 618 6	37	1
990443514	321	10 57 883 5	8	2	991873614	538	11 24 444 4	43	4
990443514	323	10 57 897 6	8	2	991961214	464	11 89 300 1	137	1
990443514	325	10 57 940 0	3	2	991964414	185	11 24 113 7	406	1
990443514	326	10 56 623 7	3	2	992081114	406	10 55 963 5	56	1
990443514	327	10 56 580 8	8	2	992258514	55	11 26 995 4	569	1
990464514	378	99 04 941 14	10	1	992261314	55	11 26 995 4	577	1
990494114	359	10 51 969 1	2	1	992261414	53	11 26 995 4	520	1
990627014	584	10 59 863 3	23	1	992273614	679	11 24 779 0	180	1
990646114	578	11 24 132 4	13	1	992296514	663	11 22 970 9	279	1
990678714	644	99 06 789 14	1	1	992298714	56	11 26 995 4	591	1
990678814	644	99 06 789 14	2	1	992338614	2	01 38 376 14	18	1
990678914	643	99 23 420 14	2	4	992338714	2	01 38 376 14	24	1
990706901	69	10 51 963 1	10	1	992338914	2	01 38 376 14	38	1
990759714	687	11 89 568 8	10	4	992339814	3	01 38 376 14	82	1
990835714	467	11 89 365 0	40	1	992340514	3	01 38 376 14	616	1
990835714	478	11 89 365 1	40	1	992342014	3	01 38 376 14	617	1
990870614	3	01 38 376 14	555	1	992345114	18	11 24 047 9	50	1
990870614	18	11 24 047 9	40	1	992440414	548	11 93 749 9	12	1

Item	Sheet	Assembly	Pos.	Quantity	Item	Sheet	Assembly	Pos.	Quantity
992440514	566	11 93 750 1	12	1	993758914	679	11 24 779 0	183	1
992440614	573	11 93 750 4	12	1	993758914	679	11 24 779 0	188	1
992459414	578	11 24 132 4	14	1	993758914	679	11 24 779 0	189	1
992504214	520	11 23 239 9	813	1	993759614	691	10 53 635 2	651	1
992511514	488	11 26 260 9	604	1	993774614	54	11 26 995 4	537	1
992519014	56	11 26 995 4	594	1	993775014	56	11 26 995 4	5021	1
992552014	394	10 56 178 0	389	1	994001014	618	10 51 743 9	28	1
992564614	464	11 89 300 1	131	1	994460114	54	11 26 995 4	545	1
992564614	464	11 89 300 1	143	1	994465914	53	11 26 995 4	519	1
992569114	55	11 26 995 4	557	1	994486214	534	11 22 970 6	900	1
992641714	536	11 23 937 8	11	1	994486214	534	11 22 970 6	901	1
992671814	482	99 23 389 14	1	2	994486214	534	11 22 970 6	910	1
992741214	339	99 27 572 14	10	1	994852014	593	99 48 521 14	1	1
992751514	660	10 51 971 3	18	2	994852114	3	01 38 376 14	115	1
992757214	338	99 23 386 14	10	1	994905314	502	11 26 261 2	636	1
992757514	340	10 52 656 0	11	4	995006114	55	11 26 995 4	578	1
992774714	666	11 23 619 7	4	1	995027514	54	11 26 995 4	532	1
992835314	185	11 24 113 7	400	1	995060114	53	11 26 995 4	521	1
992837314	674	99 27 747 14	367	1	995082614	394	10 56 178 0	382	1
992857714	674	99 27 747 14	366	1	995085214	464	11 89 300 1	133	1
992879314	502	11 26 261 2	634	1	995085214	464	11 89 300 1	134	1
992890714	9	11 92 982 1	203	1	995174014	534	11 22 970 6	905	1
992893114	520	11 23 239 9	803	1	995175314	663	11 22 970 9	281	1
992921714	467	11 89 365 0	29	2	995176314	54	11 26 995 4	538	1
992921714	478	11 89 365 1	29	2	995180714	185	11 24 113 7	416	1
992925814	361	10 51 968 6	11	1	995207914	54	11 26 995 4	540	1
992925914	361	10 51 968 6	12	1	995219914	464	11 89 300 1	140	1
992938614	372	99 33 537 14	4	1	995226814	679	11 24 779 0	184	1
992938814	372	99 33 537 14	3	4	995226814	679	11 24 779 0	187	1
992938914	372	99 33 537 14	1	1	995240114	465	11 89 300 1	167	1
992939214	372	99 33 537 14	2	1	995263914	185	11 24 113 7	425	1
992943414	372	99 33 537 14	5	1	995264214	55	11 26 995 4	566	1
992958814	544	11 28 594 7	10	4	995285414	622	10 52 439 2	361	1
992958814	564	11 28 619 1	10	6	995421014	185	11 24 113 7	402	1
992958814	571	11 28 653 4	10	6	995437214	463	11 89 300 1	119	1
992980314	338	99 23 386 14	13	1	995440614	55	11 26 995 4	576	1
992982314	341	99 29 803 14	14	6	995512314	185	11 24 113 7	410	1
993006014	510	11 23 820 3	57	1	995537614	9	11 92 982 1	202	1
993034714	641	99 23 405 14	1	4	995830614	721	10 57 089 4	804	1
993080014	590	99 23 398 14	15	2	995865114	534	11 22 970 6	907	1
993204614	463	11 89 300 1	104	1	995865114	534	11 22 970 6	911	1
993204614	463	11 89 300 1	109	1	995943114	488	11 26 260 9	600	1
993213714	364	10 55 208 5	653	1	995943514	186	11 24 113 7	619	1
993226114	520	11 23 239 9	800	1	995943514	488	11 26 260 9	619	1
993226114	520	11 23 239 9	801	1	995943614	186	11 24 113 7	620	1
993227714	691	10 53 635 2	650	1	995943614	488	11 26 260 9	620	1
993324114	343	10 51 969 7	4	1	995943714	502	11 26 261 2	628	1
993352014	633	10 55 372 1	53	8	995943814	186	11 24 113 7	629	1
993353714	371	99 29 259 14	1	1	995943814	502	11 26 261 2	629	1
993419814	511	11 23 820 3	80	2	995944014	502	11 26 261 2	631	1
993522914	590	99 23 398 14	20	1	995944114	502	11 26 261 2	632	1
993560614	660	10 51 971 3	26	4	995944214	394	10 56 178 0	384	1
993623814	347	99 33 241 14	822	1	995944314	394	10 56 178 0	387	1
993643514	185	11 24 113 7	409	1	995944414	394	10 56 178 0	391	1
993657714	53	11 26 995 4	516	1	995951214	394	10 56 178 0	392	1
993685614	502	11 26 261 2	633	1	995951314	364	10 55 208 5	650	1
993694214	185	11 24 113 7	382	1	995951414	364	10 55 208 5	651	1
993734014	54	11 26 995 4	535	1	995959114	186	11 24 113 7	916	1
993751514	364	10 55 208 5	654	1	995961914	185	11 24 113 7	424	1
993758914	679	11 24 779 0	182	1	995962014	53	11 26 995 4	426	1

Item	Sheet	Assembly	Pos.	Quantity
995972114	53	11 26 995 4	500	1
995972214	53	11 26 995 4	501	1
995972314	53	11 26 995 4	502	1
995972414	53	11 26 995 4	503	1
995972514	186	11 24 113 7	504	1
995972614	186	11 24 113 7	505	1
995972814	53	11 26 995 4	510	1
995972914	53	11 26 995 4	515	1
995973014	53	11 26 995 4	518	1
995973214	54	11 26 995 4	523	1
995973514	54	11 26 995 4	530	1
995973614	54	11 26 995 4	531	1
995973714	54	11 26 995 4	539	1
995973814	53	11 26 995 4	517	1
995974114	54	11 26 995 4	550	1
995974214	55	11 26 995 4	558	1
995974314	186	11 24 113 7	560	1
995974414	55	11 26 995 4	561	1
995974614	55	11 26 995 4	562	1
995974714	55	11 26 995 4	563	1
995974814	55	11 26 995 4	564	1
995974914	55	11 26 995 4	565	1
995976414	56	11 26 995 4	5023	1
995976414	56	11 26 995 4	5024	1
995976514	56	11 26 995 4	5025	1
995976514	56	11 26 995 4	5026	1
995991314	502	11 26 261 2	630	1
996000214	463	11 89 300 1	120	1
996026214	463	11 89 300 1	121	1
996026214	464	11 89 300 1	129	1
996026214	488	11 26 260 9	601	1
996037814	54	11 26 995 4	528	1
996037914	54	11 26 995 4	529	1
996038114	394	10 56 178 0	377	1
996038214	394	10 56 178 0	383	1
996084314	465	11 89 300 1	161	1
996084314	465	11 89 300 1	164	1
996084614	463	11 89 300 1	100	1
996084614	463	11 89 300 1	105	1
996087014	463	11 89 300 1	101	1
996087014	463	11 89 300 1	106	1
996089814	463	11 89 300 1	124	1
996204514	463	11 89 300 1	123	1
996204614	463	11 89 300 1	126	1
996204714	464	11 89 300 1	141	1
996204814	465	11 89 300 1	160	1
996204814	465	11 89 300 1	165	1
996367614	488	11 26 260 9	603	1
996450714	464	11 89 300 1	130	1
996450714	464	11 89 300 1	142	1
996459514	185	11 24 113 7	412	1
996459714	186	11 24 113 7	434	1
996466614	53	11 26 995 4	507	1
996466814	54	11 26 995 4	534	1
996467014	55	11 26 995 4	567	1
996467114	56	11 26 995 4	590	1
996625314	347	99 33 241 14	820	1
996625414	347	99 33 241 14	821	1
996735814	185	11 24 113 7	413	1
996770614	186	11 24 113 7	822	1
996770714	221	11 26 949 8	823	1
996770814	221	11 26 949 8	824	1
996771014	221	11 26 949 8	826	1
996771114	221	11 26 949 8	827	1
996778614	54	11 26 995 4	541	1
996779514	185	11 24 113 7	391	1
996779614	185	11 24 113 7	392	1
996779714	213	11 24 972 9	803	1
996848514	53	11 26 995 4	415	1
996943814	717	11 89 549 1	496	1
996972614	464	11 89 300 1	132	1
996991514	463	11 89 300 1	110	1
996991514	463	11 89 300 1	114	1
997040201	357	96 96 543 01	25	1
997058014	186	11 24 113 7	825	1
999832101	356	93 36 755 01	25	1

Description	Item	Pos.	Quantity	Sheet	Assembly	Description
12-SIDED SCREW M10X30 X5	10132558	4	4	292	10 14 013 6	EXHAUST TC MOUNTING
A-FRAME 1 ASSEMBLY UNIT	11239378	63	1	2	01 38 376 14	LR 1300 SX
A-FRAME 1 CPL	11244444	10	1	536	11 23 937 8	A-FRAME 1 ASSEMBLY UNIT
A-FRAME ELECTRICS	10531207	3	1	538	11 24 444 4	A-FRAME 1 CPL
A-FRAME ERECTION CYL INST	10519694	51	1	18	11 24 047 9	SUPERSTRUCTURE CPL
A-FRAME ERECTION HYDR	10519695	2	1	83	10 51 969 4	A-FRAME ERECTION CYL INST
ACCESS CPL	10501795	32	6	467	11 89 365 0	CRAWLER CARRIER RIGHT CP
ACCESS CPL	10501795	32	6	478	11 89 365 1	CRAWLER CARRIER LEFT CP
ACCESS LADDER CPL RFK	11237407	583	1	3	01 38 376 14	LR 1300 SX
ACCESSORIES AIR COMPRES	11414757	4	1	11	11 92 891 3	COMPRESSOR RFK
ACTUATING UNIT	592054714	95	1	380	99 04 645 14	DRIVE
ADAPTER FRAME	10599215	32	1	408	10 51 907 9	CONTROL STAND LEFT
ADAPTER PLATE	11220468	5	1	704	11 22 037 2	FOOT PEDAL EL INSTALLATIO
ADAPTER PLATE	11223693	5	2	418	11 22 369 1	FOOT PEDAL EL INSTALLATIO
ADAPTER PLATE	959571914	14	2	660	10 51 971 3	SELF-LOADING SYSTEM RFK
ADAPTOR	10121091	1	1	121	90 74 418	REGULATING VALVE
ADAPTOR	11221276	5	1	167	11 22 126 8	PUMP ELEMENT
ADAPTOR	570950308	1	1	172	70 19 834	ADAPTOR
ADAPTOR	7019834	4	1	167	11 22 126 8	PUMP ELEMENT
ADAPTOR 5X84X90 PA 6	10549545	53	1	402	11 27 970 6	CABIN CPL
ADD-ON FLANGE	11250972	30	1	98	11 24 682 0	DISTRIBUTOR GEARBOX
ADD-ON FLANGE	11250974	70	3	98	11 24 682 0	DISTRIBUTOR GEARBOX
ADD-ON FLANGE	11290845	80	1	98	11 24 682 0	DISTRIBUTOR GEARBOX
ADD-ON FLANGE	790403714	40	1	98	11 24 682 0	DISTRIBUTOR GEARBOX
ADD-ON HOUSING	10195680	31	1	51	10 56 645 8	TERMINAL BOX
ADD-ON HOUSING	605613701	41	1	51	10 56 645 8	TERMINAL BOX
ADD-ON HOUSING	693149814	45	1	51	10 56 645 8	TERMINAL BOX
ADD-ON PARTS DIESEL ENGIN	11241139	20	1	92	11 24 048 0	CENTRAL POWER UNIT
ADD-ON PRELIMINARY FUEL F	10550911	10	1	212	11 24 114 4	FUEL SYSTEM
ADDITIONAL BALLAST	10349439	12	6	339	99 27 572 14	BASEPLATE CPL
ADDITIONAL BALLAST	10349440	11	8	339	99 27 572 14	BASEPLATE CPL
ADHESIVE LABEL	10518558	1	1	622	10 52 439 2	HOSE LIST
ADHESIVE LABEL	10518558	2	5	622	10 52 439 2	HOSE LIST
ADHESIVE LABEL	10518558	1	3	674	99 27 747 14	HOSE LIST
ADHESIVE LABEL	10518558	1	2	691	10 53 635 2	HOSE LIST
ADHESIVE SIGN	11228726	20	1	649	10 55 280 7	GRATING CPL
ADHESIVE SIGN	11228726	17	1	657	10 55 514 8	FALL PROTECTION RFK
ADHESIVE SIGN	11228734	23	1	647	10 55 601 0	FALL PROTECTION RFK
ADHESIVE SIGN	11228734	16	1	650	11 29 473 7	GANGWAY INTERM. SECTION
ADHESIVE SIGN	11228734	17	1	654	11 29 474 2	GANGWAY INTERM. SECTION
ADHESIVE SIGN	11228734	19	1	655	11 29 474 3	GANGWAY INTERM. SECTION
ADHESIVE SIGN	11228734	18	1	657	10 55 514 8	FALL PROTECTION RFK
ADJUSTING NUT	944403703	8	1	471	96 93 178 01	TRACTION DRIVE
ADJUSTING PIECE	10287665	2	1	177	11 21 593 6	PUMP ELEMENT
ADJUSTING PISTON	11219925	1	1	101	11 21 990 5	ADJUSTMENT
ADJUSTING SCREW	10599567	6	1	109	11 06 730 4	SHUTDOWN VALVE
ADJUSTING SCREW M10X1	10012225	5	2	246	11 44 800 5	ROCKER ARM BRACKET PRE
ADJUSTMENT	11219905	2	1	99	10 53 430 7	V PUMP
ADJUSTMENT	11224738	2	1	451	51 24 059 14	VARIABLE DISPLACEMENT MO
AERATION FILTER	11280868	12	1	65	10 56 073 3	FUEL TANK CPL
AERATION FILTER	510690614	13	1	60	10 56 070 1	TANK HYDR CPL
AGGREGATE DIESEL ENGINE	11265606	6	1	2	01 38 376 14	LR 1300 SX
AGGREGATE SUPPORT PRE-A	10148254	1	1	228	10 14 768 6	POWER UNIT SUPPORT ATT
AIR COMPRESSOR	11417370	3	1	11	11 92 891 3	COMPRESSOR RFK
AIR COMPRESSOR PRE-ASSY	11417369	1	1	12	11 41 737 0	AIR COMPRESSOR
AIR COND. COMPRESSOR A	10142860	340	1	224	12 42 545 4	DIESEL ENGINE
AIR CONDITIONER RFK	11940910	124	1	420	10 35 008 0	CABIN
AIR CONDITIONING	11939346	1	1	430	11 94 091 0	AIR CONDITIONER RFK
AIR CONDITIONING COMPRES	10116767	1	1	280	10 14 286 0	AIR COND. COMPRESSOR A
AIR CONDITIONING UNIT RFK	11936212	724	1	4	01 38 376 14	LR 1300 SX

Description	Item	Pos.	Quantity	Sheet	Assembly	Description
AIR DRYER	11837214	6	1	8	11 92 958 8	AIR DUCT CPL
AIR DUCT CPL	11929588	3	1	5	11 93 045 7	MODIFICATION KIT RFK
AIR FILTER	11246790	10	1	207	11 24 114 2	SUCTION UNIT AIR
AIR FILTER HOLDER	11946424	390	1	432	11 93 934 6	AIR CONDITIONING
AIR FLAPS HYDR RFK	11272671	2	1	713	11 31 446 2	SUCTION FLAP RFK
AIR INTAKE ASSEMBLY	10147364	224	1	224	12 42 545 4	DIESEL ENGINE
AIR INTAKE PIPE ASS.	10147366	220	1	224	12 42 545 4	DIESEL ENGINE
AIR NOZZLE	592289314	52	1	419	10 35 008 0	CABIN
AIR PIPE	11621764	15	0.5	8	11 92 958 8	AIR DUCT CPL
AIR PIPE	11621764	65	9	218	11 24 114 5	ASSEMBLY INSTAL.
AIR SUCTION PIPE	11415782	1	1	273	10 14 736 6	AIR INTAKE PIPE ASS.
AIR TANK	12409205	62	1	217	11 24 114 5	ASSEMBLY INSTAL.
AIR TANK	502919808	5	1	8	11 92 958 8	AIR DUCT CPL
ANCHORING ROD	10226400	10	2	560	99 24 404 14	ANCHORING ROD CPL
ANCHORING ROD	10226401	10	2	569	99 24 405 14	ANCHORING ROD CPL
ANCHORING ROD	10226401	10	4	576	99 24 406 14	ANCHORING ROD CPL
ANCHORING ROD	10336904	10	2	542	99 26 417 14	ANCHORING ROD CPL
ANCHORING ROD	10336970	10	2	522	99 30 060 14	ANCHORING ROD CPL
ANCHORING ROD	10337309	10	2	588	99 24 594 14	ANCHORING ROD CPL
ANCHORING ROD	949910614	10	1	570	11 93 702 0	ANCHORING ROD CPL
ANCHORING ROD	949910714	10	1	561	11 93 703 7	ANCHORING ROD CPL
ANCHORING ROD CPL	11937020	13	2	566	11 93 750 1	ASSEMBLY UNIT
ANCHORING ROD CPL	11937020	13	4	573	11 93 750 4	ASSEMBLY UNIT
ANCHORING ROD CPL	11937037	13	2	548	11 93 749 9	ASSEMBLY UNIT
ANCHORING ROD CPL	992440414	12	1	548	11 93 749 9	ASSEMBLY UNIT
ANCHORING ROD CPL	992440514	12	1	566	11 93 750 1	ASSEMBLY UNIT
ANCHORING ROD CPL	992440614	12	1	573	11 93 750 4	ASSEMBLY UNIT
ANCHORING ROD CPL	992459414	14	1	578	11 24 132 4	BOOM HEAD CPL
ANCHORING ROD CPL	992641714	11	1	536	11 23 937 8	A-FRAME 1 ASSEMBLY UNIT
ANCHORING ROD CPL	993006014	57	1	510	11 23 820 3	PIVOT PIECE CPL
ANEMOMETER CPL	990646114	13	1	578	11 24 132 4	BOOM HEAD CPL
ANEMOMETER EL RFK	970720403	970	1	583	99 06 461 14	ANEMOMETER CPL
ANGLE	10563082	25	1	313	11 24 409 0	PANELLING SUPERSTR. INSTA
ANGLE	10574364	18	2	319	11 24 409 1	COVERS
ANGLE	11244498	53	1	315	11 24 409 0	PANELLING SUPERSTR. INSTA
ANGLE	11263757	18	1	188	11 24 113 8	MOTOR BEARING CPL
ANGLE	11290852	230	1	98	11 24 682 0	DISTRIBUTOR GEARBOX
ANGLE INDICATION	919058414	11	1	538	11 24 444 4	A-FRAME 1 CPL
ANGLE INDICATION	919058414	11	1	616	11 21 552 4	ANGLE INDICATION RFK
ANGLE INDICATION RFK	11215524	510	1	3	01 38 376 14	LR 1300 SX
ANGLE TRANSMITTER	11286324	10	1	515	11 90 150 9	PIVOT PIECE EL
ANGLE TRANSMITTER	11286324	10	1	579	10 53 141 3	BOOM HEAD EL
ANTENNA	11645490	76	1	403	11 27 973 6	CABIN EL
ANTI-SLIP SURFACE	11258244	990	1	18	11 24 047 9	SUPERSTRUCTURE CPL
ANTITHEFT LOCK	10663904	32	1	414	11 26 095 7	CONTROL STAND RIGHT
ARM REST LEFT	7024982	90	1	434	10 22 506 8	OPERATOR SEAT
ARM REST RIGHT	7024983	91	1	434	10 22 506 8	OPERATOR SEAT
ASSEMBLY INSTAL.	11241145	60	1	92	11 24 048 0	CENTRAL POWER UNIT
ASSEMBLY UNIT	11937499	10	1	547	11 24 570 5	INTERMEDIATE PIECE ASSE
ASSEMBLY UNIT	11937501	10	1	565	11 24 571 1	INTERMEDIATE PIECE ASSE
ASSEMBLY UNIT	11937504	10	1	572	11 24 571 7	INTERMEDIATE PIECE ASSE
ASSEMBLY UNIT	11940878	10	1	558	11 94 087 6	TRANSPORT LASHING
ATTACHABLE SLEEVE HOUSIN	602209714	93	1	406	10 55 963 5	SWITCH CABINET X1
ATTACHMENT CHAIN	990835714	40	1	467	11 89 365 0	CRAWLER CARRIER RIGHT CP
ATTACHMENT CHAIN	990835714	40	1	478	11 89 365 1	CRAWLER CARRIER LEFT CP
AUXILIARY ROPE	606655308	2	1	596	92 75 218 08	LIMIT SWITCH HOISTING ABOV
AXIAL FACE SEAL	7610244	2	1	471	96 93 178 01	TRACTION DRIVE
AXIAL WASHER	540270814	15	6	625	54 02 701 14	PLANETARY STAGE
AXLE	11310955	13	2	552	11 28 390 8	BOOM ACCESS
AXLE	11310955	13	2	568	11 28 583 8	BOOM ACCESS

Description	Item	Pos.	Quantity	Sheet	Assembly	Description
AXLE	11310955	13	2	575	11 28 626 1	BOOM ACCESS
AXLE	918539614	17	1	361	10 51 968 6	LUG SUPERSTRUCTURE CPL
AXLE CPL	991413814	1	1	541	99 14 137 14	DEFLECTION PULLEY CPL
AXLE HOLDER	703003014	28	1	510	11 23 820 3	PIVOT PIECE CPL
AXLE HOLDER	703003014	6	2	582	11 28 610 5	RETAINING DEVICE CPL
AXLE HOLDER	954372503	14	4	480	11 31 390 8	CENTRE PART CPL
AXLE HOLDER	956378214	27	2	510	11 23 820 3	PIVOT PIECE CPL
AXLE HOLDER	997040201	25	1	357	96 96 543 01	WINCH FRAME
AXLE ST.CONST.	970901603	14	2	640	99 10 116 14	ROPE GUIDE
BACK PART	10289988	2	1	434	10 22 506 8	OPERATOR SEAT
BACK-UP RING CUT	11007749	14	1	143	10 12 321 4	SEAL KIT PRESSUR.CONTROL
BACK-UP RING CUT	11007751	13	1	143	10 12 321 4	SEAL KIT PRESSUR.CONTROL
BACK-UP RING CUT	7382212	23	1	160	10 12 226 5	SEAL KIT REGULATING VALVE
BACK-UP-ALARM	10288438	52	1	45	11 24 519 0	SUPERSTRUCTURE EL
BACKING RING	10352355	110	1	685	59 21 826 14	SUPPORT CYLINDER
BACKING RING	10352359	130	4	685	59 21 826 14	SUPPORT CYLINDER
BALL	11225403	2	1	456	10 44 656 6	SHUTTLE VALVE
BALL	4901195	13	1	118	92 67 343	VENTILATION VALVE
BALL JOINT	10286648	4	1	696	10 53 352 4	CABIN EL
BALL JOINT	10505322	50	1	529	10 09 917 3	DOUBLE-ACTING CYL
BALL PIVOT	592288314	33	1	419	10 35 008 0	CABIN
BALL PIVOT	592288314	12	1	426	59 22 871 14	FRONT WINDOW CPL
BALL VALVE	510682014	39	1	20	11 29 618 6	SUPERSTRUCTURE HYDR
BALL VALVE	510682014	1	1	506	91 90 239 14	CABLE HYDR
BALLAST CHAIN	797027814	23	1	666	11 23 619 7	SELF-LOADING SYSTEM RFK
BAR SEAL KIT	11267400	10	2	106	11 21 993 0	PUMP HOUSING
BASE PLATE	10098143	1	2	89	99 16 061 14	SUPPORT CPL
BASEPLATE CPL	992757214	10	1	338	99 23 386 14	COUNTERWEIGHT ARRANGEM
BASEPLATE ST.CONST.	992741214	10	1	339	99 27 572 14	BASEPLATE CPL
BATTERY	10664204	31	2	45	11 24 519 0	SUPERSTRUCTURE EL
BATTERY COVER	10560674	1	1	79	10 56 067 3	BATTERY INSTALLATION CPL
BATTERY INSTALLATION CPL	10560673	45	1	18	11 24 047 9	SUPERSTRUCTURE CPL
BATTERY MAIN SWITCH	606070908	35	1	45	11 24 519 0	SUPERSTRUCTURE EL
BATTERY TERMINAL CLAMP	10224316	33	1	45	11 24 519 0	SUPERSTRUCTURE EL
BATTERY TERMINAL CLAMP	10224316	3	1	47	10 53 048 9	FUSE HOLDER
BATTERY TERMINAL CLAMP	10547876	32	2	45	11 24 519 0	SUPERSTRUCTURE EL
BEARING	11278605	10	1	626	54 02 702 14	ROPE DRUM CPL
BEARING	11909482	120	1	432	11 93 934 6	AIR CONDITIONING
BEARING	7025009	59	1	436	10 28 999 3	VIBRATING SYSTEM
BEARING BUSHING 22X25X13	10121971	2	4	256	10 13 382 3	SUCTION PUMP PRE-ASS.
BEARING COVER	9072908	3	1	279	90 72 906	INTERMEDIATE GEAR CPL.
BEARING FLANGE	11219918	6	1	99	10 53 430 7	V PUMP
BEARING HOLDER	9887948	14	2	150	10 14 360 7	REPAIR SET SWIVEL BEARIN
BEARING RING		15	1	352	93 88 497 01	PLANETARY GEARBOX
BEARING RING	540272714	3	1	628	54 02 704 14	POWER TAKE-OFF CPL
BEARING RING	7023833	3	1	391	11 94 017 7	DRIVING SHAFT
BEARING SHELL	7413401	17	2	177	11 21 593 6	PUMP ELEMENT
BLADDER ACCUMULATOR	510641214	16	1	94	11 24 773 5	HYDR POWER UNIT
BLANKING PLUG		74	1	352	93 88 497 01	PLANETARY GEARBOX
BLANKING PLUG	11922544	121	10	218	11 24 114 5	ASSEMBLY INSTAL.
BLANKING PLUG	11951869	7	1	219	11 24 240 8	UREA CONTAINER
BLANKING PLUG	4097529	79	1	396	90 01 376 2	SLEWING GEAR DRIVE
BLANKING PLUG	591645108	64	1	315	11 24 409 0	PANELLING SUPERSTR. INSTA
BLANKING PLUG	779014014	65	2	315	11 24 409 0	PANELLING SUPERSTR. INSTA
BLANKING PLUG	779016201	88	1	396	90 01 376 2	SLEWING GEAR DRIVE
BLANKING PLUG	779016414	57	4	633	10 55 372 1	ROOF RAILING RFK
BLANKING PLUG	779016501	84	1	471	96 93 178 01	TRACTION DRIVE
BLIND RIVET DIN 7337-A 4.8X	10555185	13	4	651	11 30 694 4	RAIL CPL
BLOCK	11226015	10	1	387	51 14 347 14	SG SAFETY BLOCK
BLOCK	943958914	30	1	20	11 29 618 6	SUPERSTRUCTURE HYDR

Description	Item	Pos.	Quantity	Sheet	Assembly	Description
BLOCK	943958914	5	1	513	10 51 826 1	PIVOT PIECE HYDR
BLOCK	946294214	25	1	20	11 29 618 6	SUPERSTRUCTURE HYDR
BODY	11932850	1	1	40	51 16 576 14	TEMPERATURE CONTROLLER
BOLT CONNECTION	910353714	8	2	581	11 28 629 9	MOUNTING PARTS
BOOM ACCESS	11283908	14	1	549	11 24 570 3	BOOM INTERMEDIATE SECTIO
BOOM ACCESS	11285838	14	1	567	11 24 570 9	BOOM INTERMEDIATE SECTIO
BOOM ACCESS	11286261	14	1	574	11 24 571 5	BOOM INTERMEDIATE SECTIO
BOOM HEAD CPL	11241324	81	1	3	01 38 376 14	LR 1300 SX
BOOM HEAD EL	10531413	3	1	578	11 24 132 4	BOOM HEAD CPL
BOOM HEAD ST.CONST. CPL	11241323	10	1	578	11 24 132 4	BOOM HEAD CPL
BOOM INTERM.SECTION ST.C	11245698	10	1	549	11 24 570 3	BOOM INTERMEDIATE SECTIO
BOOM INTERM.SECTION ST.C	11245700	10	1	567	11 24 570 9	BOOM INTERMEDIATE SECTIO
BOOM INTERM.SECTION ST.C	11245702	10	1	574	11 24 571 5	BOOM INTERMEDIATE SECTIO
BOOM INTERMEDIATE SECTIO	11245703	10	1	548	11 93 749 9	ASSEMBLY UNIT
BOOM INTERMEDIATE SECTIO	11245709	10	1	566	11 93 750 1	ASSEMBLY UNIT
BOOM INTERMEDIATE SECTIO	11245715	10	1	573	11 93 750 4	ASSEMBLY UNIT
BOTTOM HOOK BLOCK	790411214	133	1	3	01 38 376 14	LR 1300 SX
BOTTOM HOOK BLOCK	790520514	141	1	3	01 38 376 14	LR 1300 SX
BOW-TYPE CLAMP	10144699	20	1	308	11 90 032 5	EXHAUST GAS SYSTEM
BOWDEN PULL SYSTEM	11230660	270	1	432	11 93 934 6	AIR CONDITIONING
BOWL	10331395	14	1	215	10 30 300 7	FUEL PREFILTER
BOWLEN SEALING	10294170	9	1	215	10 30 300 7	FUEL PREFILTER
BOX NUT M14X1.5 AISI 316 TI	10816957	27	1	8	11 92 958 8	AIR DUCT CPL
BOX NUT M14X1.5 AISI 316 TI	10816957	27	5	217	11 24 114 5	ASSEMBLY INSTAL.
BRACING TUBE	11245756	1	1	636	11 24 575 5	PEDESTAL
BRACING TUBE	11245757	2	2	636	11 24 575 5	PEDESTAL
BRACING TUBE	958097914	10	2	483	99 26 718 14	PEDESTAL
BRACKET	10099007	5	1	375	99 29 388 14	BRACKET CPL
BRACKET	10099010	6	1	372	99 33 537 14	ROPE GUARD LUG CPL
BRACKET	10289976	72	1	434	10 22 506 8	OPERATOR SEAT
BRACKET	10336583	10	2	57	10 51 961 6	OIL COOLER INSTALLATION
BRACKET	10336584	11	2	57	10 51 961 6	OIL COOLER INSTALLATION
BRACKET	10336709	1	1	375	99 29 388 14	BRACKET CPL
BRACKET	10336711	2	2	373	99 29 389 14	SIDE COMPONENT
BRACKET	10336711	2	2	374	99 29 392 14	SIDE COMPONENT
BRACKET	10349206	7	8	329	10 54 591 0	MOTOR COWLING
BRACKET	10445651	39	2	333	11 24 483 7	MOUNTING PARTS SUPERST
BRACKET	10555261	8	2	643	99 23 420 14	INTERMEDIATE TENSIONING
BRACKET	10575967	13	1	333	11 24 483 7	MOUNTING PARTS SUPERST
BRACKET	10575968	15	1	333	11 24 483 7	MOUNTING PARTS SUPERST
BRACKET	10575969	18	1	333	11 24 483 7	MOUNTING PARTS SUPERST
BRACKET	10575970	23	8	333	11 24 483 7	MOUNTING PARTS SUPERST
BRACKET	10575971	37	3	333	11 24 483 7	MOUNTING PARTS SUPERST
BRACKET	10575985	20	2	333	11 24 483 7	MOUNTING PARTS SUPERST
BRACKET	10579757	26	1	333	11 24 483 7	MOUNTING PARTS SUPERST
BRACKET	10592334	19	1	584	10 59 863 3	PENDULUM CPL
BRACKET	10592619	43	1	333	11 24 483 7	MOUNTING PARTS SUPERST
BRACKET	10592621	44	1	333	11 24 483 7	MOUNTING PARTS SUPERST
BRACKET	10597981	2	2	79	10 56 067 3	BATTERY INSTALLATION CPL
BRACKET	11234405	58	1	333	11 24 483 7	MOUNTING PARTS SUPERST
BRACKET	11234413	59	1	333	11 24 483 7	MOUNTING PARTS SUPERST
BRACKET	11247011	38	1	333	11 24 483 7	MOUNTING PARTS SUPERST
BRACKET	11247375	22	1	333	11 24 483 7	MOUNTING PARTS SUPERST
BRACKET	11247791	29	1	333	11 24 483 7	MOUNTING PARTS SUPERST
BRACKET	11247808	33	1	333	11 24 483 7	MOUNTING PARTS SUPERST
BRACKET	11248460	12	1	211	11 24 114 3	EXHAUST GAS SYSTEM
BRACKET	11248969	9	2	313	11 24 409 0	PANELLING SUPERSTR. INSTA
BRACKET	11257849	72	1	335	11 24 483 7	MOUNTING PARTS SUPERST
BRACKET	11257851	75	3	335	11 24 483 7	MOUNTING PARTS SUPERST
BRACKET	11263413	16	1	188	11 24 113 8	MOTOR BEARING CPL

Description	Item	Pos.	Quantity	Sheet	Assembly	Description
BRACKET	11265945	35	1	333	11 24 483 7	MOUNTING PARTS SUPERST
BRACKET	11279036	44	1	217	11 24 114 5	ASSEMBLY INSTAL.
BRACKET	11279237	48	1	217	11 24 114 5	ASSEMBLY INSTAL.
BRACKET	11308593	14	1	211	11 24 114 3	EXHAUST GAS SYSTEM
BRACKET	11308594	15	1	211	11 24 114 3	EXHAUST GAS SYSTEM
BRACKET	7370581	73	1	434	10 22 506 8	OPERATOR SEAT
BRACKET	949758314	24	1	333	11 24 483 7	MOUNTING PARTS SUPERST
BRACKET	958478414	56	2	315	11 24 409 0	PANELLING SUPERSTR. INSTA
BRACKET	958478414	10	10	329	10 54 591 0	MOTOR COWLING
BRACKET	958478414	15	4	483	99 26 718 14	PEDESTAL
BRACKET	958478414	5	2	636	11 24 575 5	PEDESTAL
BRACKET	959465714	38	2	313	11 24 409 0	PANELLING SUPERSTR. INSTA
BRACKET	959465714	17	1	705	11 93 621 2	AIR CONDITIONING UNIT RFK
BRACKET	967313703	25	1	333	11 24 483 7	MOUNTING PARTS SUPERST
BRACKET	971304903	1	2	476	99 08 357 14	ATTACHMENT CHAIN
BRACKET CPL	992938614	4	1	372	99 33 537 14	ROPE GUARD LUG CPL
BRACKET CPL	992938814	3	4	372	99 33 537 14	ROPE GUARD LUG CPL
BRACKET CPL	992943414	5	1	372	99 33 537 14	ROPE GUARD LUG CPL
BRACKET REAR	11262893	1	1	437	11 26 095 6	STEERING CONSOLE RIGHT
BRACKET ST.CONST.	10574837	15	1	631	10 55 372 1	ROOF RAILING RFK
BRACKET ST.CONST.	10575981	11	1	333	11 24 483 7	MOUNTING PARTS SUPERST
BRACKET ST.CONST.	10575984	14	1	333	11 24 483 7	MOUNTING PARTS SUPERST
BRACKET ST.CONST.	10576104	19	1	333	11 24 483 7	MOUNTING PARTS SUPERST
BRACKET ST.CONST.	10585933	16	2	631	10 55 372 1	ROOF RAILING RFK
BRACKET ST.CONST.	10585936	17	1	631	10 55 372 1	ROOF RAILING RFK
BRAKE ACTUATING UNIT	10006595	96	1	396	90 01 376 2	SLEWING GEAR DRIVE
BRAKE FLANGE	540272814	1	1	629	54 02 705 14	DRIVE UNIT CPL
BRAKE MULTI-DISC SET	939347801	97	1	396	90 01 376 2	SLEWING GEAR DRIVE
BRAKE MULTI-DISC SET	939589501	1	1	354	50 20 372 01	SPRING LOADED MULTI-DISC
BRAKE PACKING SET	939347901	98	1	396	90 01 376 2	SLEWING GEAR DRIVE
BRAKE PACKING SET	939589601	2	1	354	50 20 372 01	SPRING LOADED MULTI-DISC
BRAKE SPRING SET	939348001	99	1	396	90 01 376 2	SLEWING GEAR DRIVE
BRAKE SPRING SET	939589701	3	1	354	50 20 372 01	SPRING LOADED MULTI-DISC
BRAKE VALVE	10227399	60	1	346	51 22 527 14	OIL MOTOR
BRAKE VALVE	512401414	60	1	363	51 22 942 14	OIL MOTOR
BRAKE VALVE	512411914	10	1	455	11 22 473 8	ADJUSTMENT
BS HOUSING	605604914	93	1	46	11 24 519 0	SUPERSTRUCTURE EL
BS HOUSING	693157114	61	1	516	11 90 151 1	CABLE LOOM 1 PIVOT PIECE E
BS HOUSING	693157114	50	1	595	97 14 959 03	HOIST LIMIT SWITCH EL
BS HOUSING	693157214	71	1	517	11 90 151 1	CABLE LOOM 1 PIVOT PIECE E
BUFFER	10567622	31	4	195	11 24 114 0	COOLER INSTALLATION WATE
BUFFER	592286814	13	1	419	10 35 008 0	CABIN
BUILT-IN VALVE	511640714	2	1	181	51 16 377 14	VALVE BLOCK FEED PRESSUR
BULKHEAD PLATE	10020512	9	1	317	11 24 409 1	COVERS
BULKHEAD PLATE	10445043	47	1	510	11 23 820 3	PIVOT PIECE CPL
BUSBAR	10529597	57	1	406	10 55 963 5	SWITCH CABINET X1
BUSBAR	11219647	58	1	406	10 55 963 5	SWITCH CABINET X1
BUSHING	10115304	3	1	456	10 44 656 6	SHUTTLE VALVE
BUSHING	10145395	6	1	295	10 14 584 5	GENERATOR, PRE-ASSEMBLE
BUSHING	10227126	8	1	519	61 61 541 14	CABLE DRUM
BUSHING	11239698	37	2	538	11 24 444 4	A-FRAME 1 CPL
BUSHING	11890145	2	2	469	10 55 716 2	GUIDE WHEEL CPL
BUSHING	956070614	6	2	593	99 48 521 14	TIP BOOM CPL
BUSHING	959001414	10	1	370	99 29 258 14	LUG SHEAVE SET
BUSHING	959019014	11	3	64	10 56 073 2	FUEL TANK ASSY.
BUSHING	959841114	39	4	538	11 24 444 4	A-FRAME 1 CPL
BUSHING 100/130X33 S770QL	10336763	5	3	370	99 29 258 14	LUG SHEAVE SET
BUSHING 100/130X36 S770QL	959869314	3	3	370	99 29 258 14	LUG SHEAVE SET
BUSHING 100/80X40 E470;EN	954398803	15	2	581	11 28 629 9	MOUNTING PARTS
BUSHING 115/135X21 E470;EN	970859103	40	4	538	11 24 444 4	A-FRAME 1 CPL

Description	Item	Pos.	Quantity	Sheet	Assembly	Description
BUSHING 115/135X56 E470;EN	970588503	61	2	18	11 24 047 9	SUPERSTRUCTURE CPL
BUSHING 120/150X88 E470;EN	954398703	60	2	18	11 24 047 9	SUPERSTRUCTURE CPL
BUSHING 120X130X30 KUNST	10223371	11	1	370	99 29 258 14	LUG SHEAVE SET
BUSHING 13/28X15 S355J2;EN	970726703	19	4	497	11 22 050 0	WINCHES INSTALLATION
BUSHING 13/28X15 S355J2;EN	970726703	19	4	503	11 22 050 1	WINCHES INSTALLATION
BUSHING 140/160X100 GZ-CU	11233062	42	1	590	99 23 398 14	ROLLER SET
BUSHING 140/160X55 LHR355-	956803414	16	2	590	99 23 398 14	ROLLER SET
BUSHING 140/160X77 LHR355-	956070514	4	2	593	99 48 521 14	TIP BOOM CPL
BUSHING 140/168.3X40 LHR35	956092714	25	2	593	99 48 521 14	TIP BOOM CPL
BUSHING 20X24.9X31.9 POM;	958471514	17	1	321	10 57 883 5	DOOR
BUSHING 20X24.9X31.9 POM;	958471514	17	1	323	10 57 897 6	DOOR
BUSHING 20X24.9X31.9 POM;	958471514	6	1	325	10 57 940 0	DOOR
BUSHING 20X24.9X31.9 POM;	958471514	6	1	326	10 56 623 7	DOOR
BUSHING 20X24.9X31.9 POM;	958471514	14	1	327	10 56 580 8	DOOR
BUSHING 20X24X30 POM;DIN	797029114	7	1	321	10 57 883 5	DOOR
BUSHING 20X24X30 POM;DIN	797029114	7	1	323	10 57 897 6	DOOR
BUSHING 20X24X30 POM;DIN	797029114	5	1	325	10 57 940 0	DOOR
BUSHING 20X24X30 POM;DIN	797029114	5	1	326	10 56 623 7	DOOR
BUSHING 20X24X30 POM;DIN	797029114	7	1	327	10 56 580 8	DOOR
BUSHING 25/40X56	790212314	39	2	77	10 58 163 4	CABIN SUSPENSION CPL
BUSHING 30/40X38 GZ-CUSN	967216303	2	1	623	96 72 161 03	ROPE PULLEY CPL
BUSHING 50/55X30	708014114	4	4	582	11 28 610 5	RETAINING DEVICE CPL
BUSHING 50/60X35 CUZN25AL	10504737	190	1	86	59 21 041 14	DOUBLE-ACTING CYL
BUSHING 50X60X42	11230849	18	2	538	11 24 444 4	A-FRAME 1 CPL
BUSHING 51/70X13.5 POLYAMI	10534042	14	8	83	10 51 969 4	A-FRAME ERECTION CYL INST
BUSHING 60X70X25 CUZN25AL	10546993	20	2	535	11 27 536 5	TILT-BACK SUPPORTS INSTAL
BUSHING 75.5X110X2.5 POM;	10336928	18	4	542	99 26 417 14	ANCHORING ROD CPL
BUSHING 75X110X10 POM;DIN	10336924	16	8	542	99 26 417 14	ANCHORING ROD CPL
BUSHING 75X110X5 POM;DIN	10336926	17	8	542	99 26 417 14	ANCHORING ROD CPL
BUSHING 90.5/101.6X26 LHR35	949740614	11	10	640	99 10 116 14	ROPE GUIDE
BUSHING 90/110X36 S355J2H	949988214	19	2	590	99 23 398 14	ROLLER SET
BUSHING 90/110X50 E470;EN	385037314	14	2	581	11 28 629 9	MOUNTING PARTS
BUSHING 91/101.6X145 LHR35	956805414	18	2	590	99 23 398 14	ROLLER SET
BUSHING 91/101.6X5 LHR355-	956803714	25	2	590	99 23 398 14	ROLLER SET
BUSHING 91/101.6X60 LHR355-	956805314	17	2	590	99 23 398 14	ROLLER SET
BUSHING EN 10060 17.5X26.5	10588730	12	3	58	10 56 070 0	TANK INSTALLATION HYDR
BUSHING EN 10210-2 140.5/159	956803214	32	2	590	99 23 398 14	ROLLER SET
BUSHING HOUSING	6203137	93	1	404	11 27 973 6	CABIN EL
BUTT STRAP	10591681	50	4	601	79 04 112 14	BOTTOM HOOK BLOCK
BUTT STRAP	10591682	18	4	601	79 04 112 14	BOTTOM HOOK BLOCK
BUTT STRAP	11210610	50	4	608	79 05 205 14	BOTTOM HOOK BLOCK
BUTT STRAP	571895008	18	4	608	79 05 205 14	BOTTOM HOOK BLOCK
BUTT STRAP	950610714	10	2	664	99 35 606 14	MOUNTING LINK CPL
BUTT STRAP	953580303	10	1	442	99 18 041 14	LASHING SUPERSTRUCTURE
BUTT STRAP	959912014	11	6	341	99 29 803 14	LASHING BALLAST
BUTT STRAP	959912514	15	12	341	99 29 803 14	LASHING BALLAST
BUTTON	10289975	43	4	434	10 22 506 8	OPERATOR SEAT
BUTTON	10504994	9	1	693	11 23 623 3	POUCH SOCKET
BYPASS CONNECTOR	918365114	91	1	46	11 24 519 0	SUPERSTRUCTURE EL
C-RAIL ST.CONST.	10599614	47	1	333	11 24 483 7	MOUNTING PARTS SUPERST
CABIN	10350080	10	1	402	11 27 970 6	CABIN CPL
CABIN CPL	11279706	30	1	2	01 38 376 14	LR 1300 SX
CABIN EL	10533524	50	1	695	10 53 246 1	CAMERA MONITORING
CABIN EL	11279736	3	1	402	11 27 970 6	CABIN CPL
CABIN INCLINATION EL RFK	10531224	3	1	701	10 51 728 0	CABIN INCLINATION RFK
CABIN INCLINATION RFK	10517280	719	1	4	01 38 376 14	LR 1300 SX
CABIN SUSPENSION CPL	10581634	35	1	18	11 24 047 9	SUPERSTRUCTURE CPL
CABLE	11234650	150	4	404	11 27 973 6	CABIN EL
CABLE	11240499	3	1	696	10 53 352 4	CABIN EL
CABLE DRUM	616154114	21	1	518	91 92 528 14	CABLE DRUM

Description	Item	Pos.	Quantity	Sheet	Assembly	Description
CABLE DRUM	919252814	31	1	515	11 90 150 9	PIVOT PIECE EL
CABLE DUCT CABINET 1	916525114	31	1	403	11 27 973 6	CABIN EL
CABLE GLAND	10045155	21	2	516	11 90 151 1	CABLE LOOM 1 PIVOT PIECE E
CABLE GLAND	10045155	34	1	595	97 14 959 03	HOIST LIMIT SWITCH EL
CABLE GLAND	10045157	22	1	516	11 90 151 1	CABLE LOOM 1 PIVOT PIECE E
CABLE GLAND	10045157	37	1	516	11 90 151 1	CABLE LOOM 1 PIVOT PIECE E
CABLE GLAND	602440301	23	1	516	11 90 151 1	CABLE LOOM 1 PIVOT PIECE E
CABLE GLAND	602440301	45	1	516	11 90 151 1	CABLE LOOM 1 PIVOT PIECE E
CABLE GLAND	693148214	55	1	725	10 52 155 9	MODULE REFUELLING SYSTE
CABLE HARNESS	12403954	1	1	305	10 15 028 8	CABLE HARNESS MOUNTING
CABLE HARNESS MOUNTING	10150288	580	1	225	12 42 545 4	DIESEL ENGINE
CABLE HYDR	919023914	29	1	504	10 56 187 5	TOOL EQUIPMENT
CABLE LADDER ST.CONST.	11246919	42	1	333	11 24 483 7	MOUNTING PARTS SUPERST
CABLE LADDER ST.CONST.	11247023	61	1	335	11 24 483 7	MOUNTING PARTS SUPERST
CABLE LADDER ST.CONST.	11247131	62	1	335	11 24 483 7	MOUNTING PARTS SUPERST
CABLE LADDER ST.CONST.	11247158	48	1	333	11 24 483 7	MOUNTING PARTS SUPERST
CABLE LADDER ST.CONST.	11247207	50	1	333	11 24 483 7	MOUNTING PARTS SUPERST
CABLE LADDER ST.CONST.	11265089	65	1	335	11 24 483 7	MOUNTING PARTS SUPERST
CABLE LOOM	10223208	30	1	432	11 93 934 6	AIR CONDITIONING
CABLE LOOM	10575599	21	1	579	10 53 141 3	BOOM HEAD EL
CABLE LOOM	11376327	582	1	225	12 42 545 4	DIESEL ENGINE
CABLE LOOM	11931931	110	1	15	11 93 192 6	MODIFICATION EL RFK
CABLE LOOM	11931932	120	1	15	11 93 192 6	MODIFICATION EL RFK
CABLE LOOM	11946453	290	1	432	11 93 934 6	AIR CONDITIONING
CABLE LOOM	11946454	300	1	432	11 93 934 6	AIR CONDITIONING
CABLE LOOM	11946455	310	1	432	11 93 934 6	AIR CONDITIONING
CABLE LOOM 1 PIVOT PIECE E	11901511	21	1	515	11 90 150 9	PIVOT PIECE EL
CABLE LOOM REFUELLING S	10521560	60	1	725	10 52 155 9	MODULE REFUELLING SYSTE
CABLE LOOM W 1	11247122	11	1	184	11 24 448 7	CENTRAL POWER UNIT EL
CABLE LOOM W 10	10559638	25	1	406	10 55 963 5	SWITCH CABINET X1
CABLE LOOM W 19	10519082	201	1	404	11 27 973 6	CABIN EL
CABLE LOOM W 2	11247121	11	1	45	11 24 519 0	SUPERSTRUCTURE EL
CABLE LOOM W 20	11261603	202	1	404	11 27 973 6	CABIN EL
CABLE LOOM W 22	10519085	204	1	404	11 27 973 6	CABIN EL
CABLE LOOM W 3	10563643	13	1	45	11 24 519 0	SUPERSTRUCTURE EL
CABLE LOOM W 40	10563800	41	1	539	10 53 120 7	A-FRAME ELECTRICS
CABLE LOOM W 40	11314473	50	1	539	10 53 120 7	A-FRAME ELECTRICS
CABLE LUG	602206114	24	1	51	10 56 645 8	TERMINAL BOX
CABLE LUG	602206514	74	2	46	11 24 519 0	SUPERSTRUCTURE EL
CABLE PROTECTION SWITCH	10351101	60	1	406	10 55 963 5	SWITCH CABINET X1
CABLE PROTECTION SWITCH	10351102	61	3	406	10 55 963 5	SWITCH CABINET X1
CABLE PROTECTION SWITCH	10351103	62	1	406	10 55 963 5	SWITCH CABINET X1
CABLE PROTECTION SWITCH	10351104	63	2	406	10 55 963 5	SWITCH CABINET X1
CABLE PROTECTION SWITCH	10351105	64	1	406	10 55 963 5	SWITCH CABINET X1
CABLE PROTECTION SWITCH	10351106	65	3	406	10 55 963 5	SWITCH CABINET X1
CABLE SLEEVE	11946462	360	1	432	11 93 934 6	AIR CONDITIONING
CABLE SOCK	602707214	90	1	504	10 56 187 5	TOOL EQUIPMENT
CABLE SOCK	602707414	91	1	504	10 56 187 5	TOOL EQUIPMENT
CABLE TIE	603202314	15	1	16	11 93 193 0	SUPERSTRUCTURE EL
CABLE TIE	603202314	99	2	305	10 15 028 8	CABLE HARNESS MOUNTING
CABLE TIE	603202514	16	1	16	11 93 193 0	SUPERSTRUCTURE EL
CAGE NUT M10-R-140-32	413003308	80	32	311	11 24 114 6	COVER
CAGE NUT M10-R-140-32	413003308	38	18	331	11 24 922 2	COVER UNDERSIDE
CAGE NUT M10-R-140-47	413003508	82	10	311	11 24 114 6	COVER
CAGE NUT M10-R-140-47	413003508	58	4	315	11 24 409 0	PANELLING SUPERSTR. INSTA
CAGE NUT M10-R-140-62	413004408	81	8	311	11 24 114 6	COVER
CAGE NUT M10-R-140-62	413004408	13	24	329	10 54 591 0	MOTOR COWLING
CAGE NUT M10-RR-140-47	485549914	21	2	57	10 51 961 6	OIL COOLER INSTALLATION
CAGE NUT M10-RR-140-47	485549914	2	8	81	10 56 069 4	MODULES INSTALLATION
CAGE NUT M10-RR-140-47	485549914	32	53	331	11 24 922 2	COVER UNDERSIDE

Description	Item	Pos.	Quantity	Sheet	Assembly	Description
CAGE NUT M10-RR-140-62	485550014	19	4	79	10 56 067 3	BATTERY INSTALLATION CPL
CAGE NUT M10-RR-140-62	485550014	29	21	313	11 24 409 0	PANELLING SUPERSTR. INSTA
CAGE NUT M10-RR-140-62	485550014	25	2	331	11 24 922 2	COVER UNDERSIDE
CAGE NUT M8-R-123-47 ST	413003208	9	2	704	11 22 037 2	FOOT PEDAL EL INSTALLATIO
CAGE NUT M8-RR-123-47	485550114	61	5	315	11 24 409 0	PANELLING SUPERSTR. INSTA
CAGE NUT M8-RR-123-47	485550114	4	4	373	99 29 389 14	SIDE COMPONENT
CAGE NUT M8-RR-123-47	485550114	4	4	374	99 29 392 14	SIDE COMPONENT
CAGE NUT M8-RR-123-47	485550114	16	2	376	99 29 386 14	BRACKET CPL
CAGE NUT M8-RR-123-47	485550114	16	2	377	99 29 434 14	BRACKET CPL
CAGE NUT M8-RR-123-47	485550114	30	3	402	11 27 970 6	CABIN CPL
CAGE NUT M8-RR-123-47	485550114	43	2	633	10 55 372 1	ROOF RAILING RFK
CAMERA CCD	10024012	31	1	695	10 53 246 1	CAMERA MONITORING
CAMERA CCD	10024012	31	1	697	10 50 775 0	CAMERA MONITORING
CAMERA MONITORING	10507750	8	1	694	11 89 400 8	VIDEO MONITORING SYSTEM
CAMERA MONITORING	10532461	7	1	694	11 89 400 8	VIDEO MONITORING SYSTEM
CAMERA MONITORING	11893352	3	1	694	11 89 400 8	VIDEO MONITORING SYSTEM
CAMS LIMIT SWITCH	606281014	45	1	45	11 24 519 0	SUPERSTRUCTURE EL
CAMSHAFT CPL.	10138231	100	1	223	12 42 545 4	DIESEL ENGINE
CAN MODULE	10351656	21	1	45	11 24 519 0	SUPERSTRUCTURE EL
CAN MODULE	10351660	23	1	45	11 24 519 0	SUPERSTRUCTURE EL
CAN MODULE	10351667	22	1	45	11 24 519 0	SUPERSTRUCTURE EL
CAN MODULE	10351668	26	1	45	11 24 519 0	SUPERSTRUCTURE EL
CAN MODULE	10351671	24	1	45	11 24 519 0	SUPERSTRUCTURE EL
CAN MODULE	10351672	27	1	45	11 24 519 0	SUPERSTRUCTURE EL
CAN MODULE	10351674	28	1	45	11 24 519 0	SUPERSTRUCTURE EL
CAN MODULE	10677274	23	1	414	11 26 095 7	CONTROL STAND RIGHT
CAP	11239908	7	1	673	59 21 584 14	LOWERING BRAKE VALVE
CAR RADIO	11699714	280	1	336	10 59 256 9	RADIO RFK
CARRIER RAIL	602106714	58	0.37	51	10 56 645 8	TERMINAL BOX
CARRYING ROLLER CPL	790523314	15	2	467	11 89 365 0	CRAWLER CARRIER RIGHT CP
CARRYING ROLLER CPL	790523314	15	2	478	11 89 365 1	CRAWLER CARRIER LEFT CP
CARTOUCHE	571352308	1	1	10	11 83 721 4	AIR DRYER
CELL RUBBER	262107814	24	6	79	10 56 067 3	BATTERY INSTALLATION CPL
CENTER STUD	11940182	3	1	390	11 94 017 6	HYDRAULIC PARTS DRIVING G
CENTER STUD	7024275	113	1	621	51 02 322 14	OIL MOTOR
CENTER-ZERO RELAY	11946464	370	1	432	11 93 934 6	AIR CONDITIONING
CENTER-ZERO RELAY	630121508	83	1	406	10 55 963 5	SWITCH CABINET X1
CENTRAL COUNTERW. ST.C	11242597	10	4	481	11 24 812 0	CENTRAL COUNTERWEIGHT
CENTRAL COUNTERWEIGHT	11248120	37	1	2	01 38 376 14	LR 1300 SX
CENTRAL GREASING	11273155	23	1	18	11 24 047 9	SUPERSTRUCTURE CPL
CENTRAL LUBRICATION PUM	11223123	12	1	70	11 27 315 5	CENTRAL GREASING
CENTRAL POWER UNIT	11240480	10	1	90	11 26 560 6	AGGREGATE DIESEL ENGINE
CENTRAL POWER UNIT EL	11244487	3	1	92	11 24 048 0	CENTRAL POWER UNIT
CENTRE PART CPL	11313908	12	1	443	11 89 364 8	UC CPL
CHAIN	740000208	1	0.4	462	11 91 872 5	CHAIN CPL
CHAIN	740000208	20	3	591	99 30 800 14	HOIST LIMIT SWITCH INSTAL.
CHAIN	740000908	4	0.624	476	99 08 357 14	ATTACHMENT CHAIN
CHAIN CONNECTION LOCK	773967214	2	4	476	99 08 357 14	ATTACHMENT CHAIN
CHAIN CPL	10350940	22	4	660	10 51 971 3	SELF-LOADING SYSTEM RFK
CHAIN CPL	11918725	25	2	446	11 89 300 5	TUBING HYDR
CHARGE AIR COOLER	11932246	1	1	203	10 57 423 9	COOLER MOTOR
CHARGE AIR CORRUGATED H	10521397	35	4	202	11 24 114 1	COOLER INSTALLATION CHA
CHARGE AIR LINE	10143612	1	1	276	10 14 967 6	CONNECTING LINE ADD-ON
CHARGE AIR LINE	10143614	2	1	276	10 14 967 6	CONNECTING LINE ADD-ON
CHARGE AIR PIPE	10562107	28	1	202	11 24 114 1	COOLER INSTALLATION CHA
CHARGE AIR PIPE	11250430	20	1	202	11 24 114 1	COOLER INSTALLATION CHA
CHARGE AIR PIPE	11250438	21	1	202	11 24 114 1	COOLER INSTALLATION CHA
CHARGE AIR PIPE	11250439	25	1	202	11 24 114 1	COOLER INSTALLATION CHA
CHARGE AIR PIPE	11890132	1	1	718	11 31 446 3	CHARGE AIR PIPE CPL
CHARGE AIR PIPE	11890133	2	1	718	11 31 446 3	CHARGE AIR PIPE CPL

Description	Item	Pos.	Quantity	Sheet	Assembly	Description
CHARGE AIR PIPE CPL	11314463	10	1	713	11 31 446 2	SUCTION FLAP RFK
CHECK SCREW M10X101 31CR	9076176	13	1	157	10 12 226 2	REGULATION REPAIR KIT
CHECK VALVE	11226088	100	2	387	51 14 347 14	SG SAFETY BLOCK
CHEESE HEAD SCREW DIN 60	11314349	11	3	543	11 23 749 8	SUPPORT CPL
CHEESE HEAD SCREW DIN 60	11314349	14	3	562	11 23 290 7	SUPPORT CPL
CHEESE HEAD SCREW DIN 60	11314349	14	6	563	11 23 292 2	SUPPORT CPL
CHEESE HEAD SCREW DIN 60	11314349	14	4	597	11 25 204 2	SUPPORT CPL
CLAMP	10122693	10	1	235	10 15 529 8	OIL SUMP PRE-ASS.
CLAMP	10129179	5	1	264	10 13 508 0	HIGH PRESSURE CONNECTO
CLAMP	10336774	11	1	545	99 29 588 14	SUPPORT
CLAMP	10336774	11	2	546	10 35 063 3	FASTENER
CLAMP	10513605	46	1	8	11 92 958 8	AIR DUCT CPL
CLAMP	10513605	31	5	202	11 24 114 1	COOLER INSTALLATION CHA
CLAMP	11000593	13	2	294	10 14 622 4	REGULATION BOOST PRESS
CLAMP	11229805	30	2	207	11 24 114 2	SUCTION UNIT AIR
CLAMP	11946451	280	1	432	11 93 934 6	AIR CONDITIONING
CLAMP	7381292	21	1	270	10 14 588 5	LEAK OIL RETURN LINE
CLAMP	7381292	12	7	294	10 14 622 4	REGULATION BOOST PRESS
CLAMP	7381628	38	2	305	10 15 028 8	CABLE HARNESS MOUNTING
CLAMP	7381629	5	3	239	10 14 671 6	OIL LINE PRE-ASSEMBLY
CLAMP	7381629	39	6	305	10 15 028 8	CABLE HARNESS MOUNTING
CLAMP	7381630	42	2	305	10 15 028 8	CABLE HARNESS MOUNTING
CLAMP	7381631	14	1	274	10 14 736 9	INTAKE STACK ASSEMBLY
CLAMP	7381631	16	1	274	10 14 736 9	INTAKE STACK ASSEMBLY
CLAMP	7381631	43	1	305	10 15 028 8	CABLE HARNESS MOUNTING
CLAMP	7381635	41	3	305	10 15 028 8	CABLE HARNESS MOUNTING
CLAMP	7381770	32	4	305	10 15 028 8	CABLE HARNESS MOUNTING
CLAMP	7381771	31	1	305	10 15 028 8	CABLE HARNESS MOUNTING
CLAMP	7382004	59	1	217	11 24 114 5	ASSEMBLY INSTAL.
CLAMP	7382088	15	1	270	10 14 588 5	LEAK OIL RETURN LINE
CLAMP	7382090	37	5	305	10 15 028 8	CABLE HARNESS MOUNTING
CLAMP	7382092	47	2	305	10 15 028 8	CABLE HARNESS MOUNTING
CLAMP	774212914	31	2	94	11 24 773 5	HYDR POWER UNIT
CLAMP	774255714	54	4	195	11 24 114 0	COOLER INSTALLATION WATE
CLAMP	790562114	45	2	8	11 92 958 8	AIR DUCT CPL
CLAMP - ADD-ON UNIT	10146587	10	1	305	10 15 028 8	CABLE HARNESS MOUNTING
CLAMP-HALF	602008508	55	2	8	11 92 958 8	AIR DUCT CPL
CLAMP-HALF	602008508	57	6	195	11 24 114 0	COOLER INSTALLATION WATE
CLAMP-HALF	602008808	38	4	480	11 31 390 8	CENTRE PART CPL
CLAMP-HALF	602010114	36	16	480	11 31 390 8	CENTRE PART CPL
CLAMP-HALF	602017114	72	4	510	11 23 820 3	PIVOT PIECE CPL
CLAMP-HALF	602017114	19	4	552	11 28 390 8	BOOM ACCESS
CLAMP-HALF	602017114	19	4	568	11 28 583 8	BOOM ACCESS
CLAMP-HALF	602017114	19	4	575	11 28 626 1	BOOM ACCESS
CLAMP-HALF	7365090	56	6	195	11 24 114 0	COOLER INSTALLATION WATE
CLAMP-HALF	7404678	37	4	480	11 31 390 8	CENTRE PART CPL
CLAMP-HALF	7413103	38	12	467	11 89 365 0	CRAWLER CARRIER RIGHT CP
CLAMP-HALF	7413103	38	12	478	11 89 365 1	CRAWLER CARRIER LEFT CP
CLAMPING BRACKET	10509133	3	2	79	10 56 067 3	BATTERY INSTALLATION CPL
CLAMPING LEVER	10555411	9	1	439	10 53 756 0	LAMP HOLDER CPL
CLAMPING PIECE	319719401	30	5	350	93 88 500 01	ROPE DRUM
CLAMPING PROFILE	7014524	42	5	195	11 24 114 0	COOLER INSTALLATION WATE
CLAMPING PROFILE	7014524	30	4.5	311	11 24 114 6	COVER
CLAMPING RING	979896808	30	2	211	11 24 114 3	EXHAUST GAS SYSTEM
CLAMPING SOCKET	10572531	20	1	516	11 90 151 1	CABLE LOOM 1 PIVOT PIECE E
CLIP	11909483	130	1	432	11 93 934 6	AIR CONDITIONING
CLIP	11909497	150	1	432	11 93 934 6	AIR CONDITIONING
CLOGGING INDICATOR	592200514	20	1	94	11 24 773 5	HYDR POWER UNIT
CLOSING FLANGE	944672614	42	1	20	11 29 618 6	SUPERSTRUCTURE HYDR
CLOSING FLANGE	949341514	45	1	20	11 29 618 6	SUPERSTRUCTURE HYDR

Description	Item	Pos.	Quantity	Sheet	Assembly	Description
CLOSING PIN	592333714	6	1	426	59 22 871 14	FRONT WINDOW CPL
CLOSING PIN	7615720	2	1	421	10 22 645 4	DOOR ACCESSORIES
CLOSING PLATE	602730714	25	3	51	10 56 645 8	TERMINAL BOX
CLOSING PLATE	602812714	26	1	51	10 56 645 8	TERMINAL BOX
CLOSING PLATE	602812714	87	1	406	10 55 963 5	SWITCH CABINET X1
CLOSING PLATE	693182314	78	2	406	10 55 963 5	SWITCH CABINET X1
CLOSING RING	10650270	31	1	388	51 22 991 14	OIL MOTOR
CLOSING RING	11940208	1	1	392	10 65 027 0	CLOSING RING
CLOSING RING	7013563	1	1	393	11 94 020 8	CLOSING RING
CLOSING RING	9885628	17	1	136	92 68 016	REPAIR KIT LOCK RING
CLOSURE CAP	11219856	11	1	562	11 23 290 7	SUPPORT CPL
COAT HOOK	592290014	76	1	420	10 35 008 0	CABIN
COLLAR NUT M14X1.5	514618508	47	1	106	11 21 993 0	PUMP HOUSING
COLLER BOLT	11297460	2	1	693	11 23 623 3	POUCH SOCKET
COLLER BUSHING	592290614	4	1	428	59 22 905 14	MIRROR + SUNN VISOR
COLLER BUSHING 40/80X51	790519814	11	2	77	10 58 163 4	CABIN SUSPENSION CPL
COMPENSATOR	10141520	5	2	290	10 14 144 3	EXHAUST PIPE PRE-ASS.
COMPENSATOR	10149145	2	1	293	10 14 511 2	EXHAUST NOZZLE ATTACHM
COMPRESSOR	12433536	4	1	217	11 24 114 5	ASSEMBLY INSTAL.
COMPRESSOR RFK	11928913	5	1	5	11 93 045 7	MODIFICATION KIT RFK
CONICAL MOUNT	746923314	21	2	188	11 24 113 8	MOTOR BEARING CPL
CONICAL PLUG		23	1	352	93 88 497 01	PLANETARY GEARBOX
CONICAL PLUG	779006601	89	1	396	90 01 376 2	SLEWING GEAR DRIVE
CONICAL PLUG	779006901	85	1	471	96 93 178 01	TRACTION DRIVE
CONNECTING FLANGE SAE	790227714	32	1	20	11 29 618 6	SUPERSTRUCTURE HYDR
CONNECTING LINE	10141549	1	1	275	10 14 736 4	AIR INTAKE ASSEMBLY
CONNECTING LINE ADD-ON	10149676	230	1	224	12 42 545 4	DIESEL ENGINE
CONNECTING LINK	9887828	14	2	117	10 11 835 0	CONNECTION HOUSING
CONNECTING PIECE PRE-ASS	10141790	217	1	224	12 42 545 4	DIESEL ENGINE
CONNECTING PIPE	10444797	75	1	218	11 24 114 5	ASSEMBLY INSTAL.
CONNECTING PLATE	11940146	4	1	388	51 22 991 14	OIL MOTOR
CONNECTING PLATE	510427914	5	1	528	10 51 959 1	TUBING HYDR
CONNECTING PLATE	510662614	12	2	20	11 29 618 6	SUPERSTRUCTURE HYDR
CONNECTING PLATE	510662914	23	3	20	11 29 618 6	SUPERSTRUCTURE HYDR
CONNECTING PLATE	510662914	5	1	345	10 51 969 8	NEEDLE LUFFING WINCH HYD
CONNECTING PLATE	510662914	5	1	362	10 51 968 7	MAIN LUG HYDR
CONNECTING PLATE	510662914	20	1	715	10 56 173 5	TUBING HYDR
CONNECTING PLATE	511455014	3	1	620	10 51 726 2	TUBING HYDR
CONNECTING ROD BEARING	10145100	2	1	242	11 34 807 2	CONROD
CONNECTING ROD BEARING	10145101	3	1	242	11 34 807 2	CONROD
CONNECTION CARRIER		1	1	352	93 88 497 01	PLANETARY GEARBOX
CONNECTION FLANGE	10132074	3	1	256	10 13 382 3	SUCTION PUMP PRE-ASS.
CONNECTION FLANGE	9268423	13	1	115	10 11 834 9	DOUBLE V-PUMP
CONNECTION FLANGE	9276385	11	1	115	10 11 834 9	DOUBLE V-PUMP
CONNECTION HOUSING	10118350	3	1	115	10 11 834 9	DOUBLE V-PUMP
CONNECTION PARTS	11280482	10	2	70	11 27 315 5	CENTRAL GREASING
CONNECTION PIECE	10139391	6	1	232	10 14 201 8	CRANKCASE BREATHER ASS
CONNECTION PIECE	10139393	5	1	232	10 14 201 8	CRANKCASE BREATHER ASS
CONNECTION PIECE	7024968	224	1	30	11 28 647 6	VALVE BLOCK
CONNECTION PLATE	938858501	5	1	357	96 96 543 01	WINCH FRAME
CONNECTION PLATE	969655301	1	1	357	96 96 543 01	WINCH FRAME
CONNECTION STUB	10128100	4	1	264	10 13 508 0	HIGH PRESSURE CONNECTO
CONNECTION STUB	927586201	12	1	356	93 36 755 01	OIL-GAUGING INSTRUMENT
CONNECTION STUB	927586201	27	1	356	93 36 755 01	OIL-GAUGING INSTRUMENT
CONNECTION SUPERSTR UC	10519696	31	1	2	01 38 376 14	LR 1300 SX
CONROD	11348054	1	1	242	11 34 807 2	CONROD
CONROD	11348072	60	6	223	12 42 545 4	DIESEL ENGINE
CONSOLE	10552306	1	1	68	10 55 268 1	DRIVER INSTALLATION
CONSOLE	10579755	3	2	188	11 24 113 8	MOTOR BEARING CPL
CONSOLE	10579779	5	1	188	11 24 113 8	MOTOR BEARING CPL

Description	Item	Pos.	Quantity	Sheet	Assembly	Description
CONSOLE	10579979	7	1	79	10 56 067 3	BATTERY INSTALLATION CPL
CONSOLE	11215384	6	1	188	11 24 113 8	MOTOR BEARING CPL
CONSOLE	11215385	13	1	207	11 24 114 2	SUCTION UNIT AIR
CONSOLE	11247208	12	1	207	11 24 114 2	SUCTION UNIT AIR
CONSOLE	11247464	9	1	211	11 24 114 3	EXHAUST GAS SYSTEM
CONSOLE	11247607	8	1	211	11 24 114 3	EXHAUST GAS SYSTEM
CONSOLE	11249800	2	2	188	11 24 113 8	MOTOR BEARING CPL
CONSOLE	11249889	9	2	188	11 24 113 8	MOTOR BEARING CPL
CONSOLE	11250222	4	2	188	11 24 113 8	MOTOR BEARING CPL
CONSOLE	11263501	17	1	188	11 24 113 8	MOTOR BEARING CPL
CONSOLE	11404751	3	1	276	10 14 967 6	CONNECTING LINE ADD-ON
CONSOLE	918585114	22	2	77	10 58 163 4	CABIN SUSPENSION CPL
CONSOLE	954485303	64	1	335	11 24 483 7	MOUNTING PARTS SUPERST
CONSOLE	992757514	11	4	340	10 52 656 0	MOUNTING PARTS
CONSOLE ST. CONST.	10551670	33	2	593	99 48 521 14	TIP BOOM CPL
CONSOLE ST. CONST.	11245759	2	2	635	11 24 147 8	UC PLATFORM
CONSOLE ST. CONST.	11245922	3	2	635	11 24 147 8	UC PLATFORM
CONSTRUCTION KIT OUTPUT	10132357	302	1	139	10 12 878 7	V PUMP
CONTACT BUSHING	605601801	427	24	51	10 56 645 8	TERMINAL BOX
CONTACT BUSHING	605610301	426	24	51	10 56 645 8	TERMINAL BOX
CONTACT GUARD	10351108	59	2	406	10 55 963 5	SWITCH CABINET X1
CONTACT LOCK	693013414	12	1	722	10 52 957 6	REFUELLING PUMP CPL
CONTACT LOCK	7368242	52	3	403	11 27 973 6	CABIN EL
CONTACT LOCK	7368248	94	1	404	11 27 973 6	CABIN EL
CONTACT PIN	605601701	35	5	516	11 90 151 1	CABLE LOOM 1 PIVOT PIECE E
CONTACT PIN	605601701	32	6	595	97 14 959 03	HOIST LIMIT SWITCH EL
CONTAINER	11837331	8	1	8	11 92 958 8	AIR DUCT CPL
CONTAINER	592286714	9	2	419	10 35 008 0	CABIN
CONTROL AREA	612436814	11	1	410	10 03 610 7	KEYBOARD OPERATING PANE
CONTROL BLOCK	511640614	1	1	181	51 16 377 14	VALVE BLOCK FEED PRESSUR
CONTROL BOX ANNEXE	10146795	571	1	225	12 42 545 4	DIESEL ENGINE
CONTROL CONSOLE	11236557	10	1	615	11 25 016 2	EMERGENCY OPERATION EL
CONTROL CONSOLE	11236937	10	1	52	11 23 908 2	CONTROL CONSOLE
CONTROL CONSOLE	11239082	111	1	46	11 24 519 0	SUPERSTRUCTURE EL
CONTROL GEAR	10144039	5	1	217	11 24 114 5	ASSEMBLY INSTAL.
CONTROL GEAR	11219917	5	1	99	10 53 430 7	V PUMP
CONTROL LEAD	600385314	31	10.5	516	11 90 151 1	CABLE LOOM 1 PIVOT PIECE E
CONTROL LEAD	600454314	53	6.5	403	11 27 973 6	CABIN EL
CONTROL LEAD	600454314	35	4	595	97 14 959 03	HOIST LIMIT SWITCH EL
CONTROL LEAD	693030914	97	2	404	11 27 973 6	CABIN EL
CONTROL LEAD	693106214	51	1.5	516	11 90 151 1	CABLE LOOM 1 PIVOT PIECE E
CONTROL LID	511640814	3	1	181	51 16 377 14	VALVE BLOCK FEED PRESSUR
CONTROL LIGHT	11258086	41	1	45	11 24 519 0	SUPERSTRUCTURE EL
CONTROL PARTS	9079870	110	6	223	12 42 545 4	DIESEL ENGINE
CONTROL PLATE LEFT	9887035	2	1	131	98 89 833	RK CYLINDER+CONTROL PLAT
CONTROL STAND LEFT	10519079	10	1	403	11 27 973 6	CABIN EL
CONTROL STAND RIGHT	11260957	20	1	403	11 27 973 6	CABIN EL
CONTROL SYSTEM	10223180	31	1	406	10 55 963 5	SWITCH CABINET X1
CONTROL UNIT	11219934	1	1	113	11 21 991 7	CONTROL GEAR
CONTROL VALVE	10114975	2	1	176	11 21 591 3	PUMP ELEMENT
CONTROL VALVE	10351603	2	1	167	11 22 126 8	PUMP ELEMENT
CONTROL VALVE	10409413	1	1	171	10 35 160 3	CONTROL VALVE
CONTROL VALVE	11215942	1	1	180	10 11 497 5	CONTROL VALVE
CONVERSION KIT	12427052	2	1	6	11 93 098 7	DIESEL ENGINE MODIFIC.
COOLANT	553078814	15	2.2	705	11 93 621 2	AIR CONDITIONING UNIT RFK
COOLANT PIPE BEND ADD-ON	10142742	382	1	224	12 42 545 4	DIESEL ENGINE
COOLER	11267560	29	1	198	10 57 423 7	COOLER MOTOR
COOLER INSTALLATION CHA	11241141	29	1	92	11 24 048 0	CENTRAL POWER UNIT
COOLER INSTALLATION WATE	11241140	28	1	92	11 24 048 0	CENTRAL POWER UNIT
COOLER MOTOR	10225925	21	1	20	11 29 618 6	SUPERSTRUCTURE HYDR

Description	Item	Pos.	Quantity	Sheet	Assembly	Description
COOLER MOTOR	10574237	10	1	195	11 24 114 0	COOLER INSTALLATION WATE
COOLER MOTOR	10574239	1	1	202	11 24 114 1	COOLER INSTALLATION CHA
COOLING WATER AIR BLEED	10142744	387	1	224	12 42 545 4	DIESEL ENGINE
COOLING WATER HOSE	11621769	49	1	195	11 24 114 0	COOLER INSTALLATION WATE
COOLING WATER HOSE	11621769	50	1	195	11 24 114 0	COOLER INSTALLATION WATE
COOLING WATER HOSE	11621769	5	0.5	212	11 24 114 4	FUEL SYSTEM
COOLING WATER HOSE	11621769	61	1	217	11 24 114 5	ASSEMBLY INSTAL.
COOLING WATER HOSE	11621772	51	1	195	11 24 114 0	COOLER INSTALLATION WATE
COOLING WATER HOSE	11621772	60	1	217	11 24 114 5	ASSEMBLY INSTAL.
COOLING WATER HOSE	11621777	48	1	195	11 24 114 0	COOLER INSTALLATION WATE
COOLING WATER HOSE	11656331	47	1	195	11 24 114 0	COOLER INSTALLATION WATE
COOLING WATER LINE	11381601	20	1	293	10 14 511 2	EXHAUST NOZZLE ATTACHM
COOLING WATER LINE	11414759	2	1	14	11 41 475 7	ACCESSORIES AIR COMPRES
COOLING WATER LINE	11414767	1	1	14	11 41 475 7	ACCESSORIES AIR COMPRES
COOLING WATER PIPE	11250555	20	1	195	11 24 114 0	COOLER INSTALLATION WATE
COOLING WATER PIPE	11250556	21	1	195	11 24 114 0	COOLER INSTALLATION WATE
COOLING WATER PIPE	11269259	19	1	195	11 24 114 0	COOLER INSTALLATION WATE
COOLING WATER PIPE	11287692	18	1	195	11 24 114 0	COOLER INSTALLATION WATE
COPPER PASTE	10002552	132	1	292	10 14 013 6	EXHAUST TC MOUNTING
CORRUGATED PIPE	10227531	16	0.5	8	11 92 958 8	AIR DUCT CPL
CORRUGATED PIPE	10227531	71	6	218	11 24 114 5	ASSEMBLY INSTAL.
COUNTER NUT M20X1.5 POL	10530322	93	1	517	11 90 151 1	CABLE LOOM 1 PIVOT PIECE E
COUNTERSUNK SCREW DIN 7	4001967	24	2	402	11 27 970 6	CABIN CPL
COUNTERSUNK SCREW DIN 7	4001967	31	24	681	11 89 568 6	SELF-LOADING SYSTEM RFK
COUNTERSUNK SCREW DIN 7	4600170	7	8	374	99 29 392 14	SIDE COMPONENT
COUNTERSUNK SCREW DIN 7	4600170	20	12	376	99 29 386 14	BRACKET CPL
COUNTERSUNK SCREW DIN 7	4600170	20	12	377	99 29 434 14	BRACKET CPL
COUNTERSUNK SCREW DIN	407071114	4	4	440	11 30 962 5	HOLDER CPL
COUNTERSUNK SCREW DIN 7	408606314	33	24	631	10 55 372 1	ROOF RAILING RFK
COUNTERSUNK SCREW DIN 7	4600257	4	7	375	99 29 388 14	BRACKET CPL
COUNTERSUNK SCREW DIN 7	4001205	3	7	375	99 29 388 14	BRACKET CPL
COUNTERSUNK SCREW DIN	4600157	11	16	376	99 29 386 14	BRACKET CPL
COUNTERSUNK SCREW DIN	4600157	11	16	377	99 29 434 14	BRACKET CPL
COUNTERSUNK SCREW DIN 7	408606214	37	4	402	11 27 970 6	CABIN CPL
COUNTERSUNK SCREW DIN 7	408606214	5	2	700	10 57 848 6	MONITOR CABIN ADD-ON
COUNTERSUNK SCREW DIN 7	4002551	6	4	373	99 29 389 14	SIDE COMPONENT
COUNTERSUNK SCREW DIN 7	4002551	6	4	374	99 29 392 14	SIDE COMPONENT
COUNTERSUNK SCREW DIN 7	408606414	90	14	335	11 24 483 7	MOUNTING PARTS SUPERST
COUNTERSUNK SCREW DIN 7	408606414	60	1	653	11 30 567 0	TRANSPORT LASHING
COUNTERSUNK SCREW DIN	408601008	16	4	521	10 58 193 7	GRATING CPL
COUNTERSUNK SCREW DIN	408601008	13	8	636	11 24 575 5	PEDESTAL
COUNTERSUNK SCREW ISO	10348867	15	4	650	11 29 473 7	GANGWAY INTERM. SECTION
COUNTERSUNK SCREW ISO	10348867	16	4	654	11 29 474 2	GANGWAY INTERM. SECTION
COUNTERSUNK SCREW ISO	10348867	18	4	655	11 29 474 3	GANGWAY INTERM. SECTION
COUNTERSUNK SCREW ISO	10348867	15	4	657	10 55 514 8	FALL PROTECTION RFK
COUNTERSUNK SCREW ISO	408600708	99	2	335	11 24 483 7	MOUNTING PARTS SUPERST
COUNTERSUNK SCREW ISO	408600708	6	8	418	11 22 369 1	FOOT PEDAL EL INSTALLATIO
COUNTERSUNK SCREW ISO	408600708	6	1	704	11 22 037 2	FOOT PEDAL EL INSTALLATIO
COUNTERSUNK SCREW ISO	10349756	93	6	335	11 24 483 7	MOUNTING PARTS SUPERST
COUNTERSUNK SCREW ISO	408600808	91	2	335	11 24 483 7	MOUNTING PARTS SUPERST
COUNTERSUNK SCREW ISO	11910892	42	6	315	11 24 409 0	PANELLING SUPERSTR. INSTA
COUNTERSUNK SCREW ISO	4002655	92	10	335	11 24 483 7	MOUNTING PARTS SUPERST
COUNTERSUNK SCREW ISO	10342191	4	3	241	10 12 134 5	RK CRANKSHAFT SEAL
COUNTERSUNK SCREW ISO 2	407041214	3	3	438	97 07 857 03	SPIRIT LEVEL ASSY.
COUNTERSUNK SCREW ISO	4001266	42	2	725	10 52 155 9	MODULE REFUELLING SYSTE
COUNTERSUNK SCREW ISO 7	4002871	34	24	402	11 27 970 6	CABIN CPL
COUNTERSUNK SCREW ISO 7	4002401	5	4	437	11 26 095 6	STEERING CONSOLE RIGHT
COUNTERWEIGHT ARRANGEM	992338614	18	1	2	01 38 376 14	LR 1300 SX
COUPLING	10348619	20	1	711	10 52 293 0	SG TACHOGENERATOR RFK
COUPLING	11249334	2	1	193	11 24 113 9	ADD-ON PARTS DIESEL ENGIN

Description	Item	Pos.	Quantity	Sheet	Assembly	Description
COUPLING FERRULE	10117768	11	1	164	10 13 452 1	THROUGH DRIVE
COUPLING FERRULE	10129873	11	1	161	10 12 987 4	THROUGH DRIVE
COUPLING FERRULE	10130007	11	1	162	10 13 000 5	THROUGH DRIVE
COUPLING FERRULE	10132360	11	1	163	10 13 235 7	CONSTRUCTION KIT OUTPUT
COUPLING FERRULE	10138069	11	1	165	10 13 806 8	THROUGH DRIVE
COUPLING FERRULE	9073827	15	1	119	10 11 835 7	REPAIR KIT CONNECTION HO
COUPLING LINK	10226402	11	4	522	99 30 060 14	ANCHORING ROD CPL
COUPLING LINK	10226402	11	4	560	99 24 404 14	ANCHORING ROD CPL
COUPLING LINK	10226402	11	4	569	99 24 405 14	ANCHORING ROD CPL
COUPLING LINK	10226402	11	8	576	99 24 406 14	ANCHORING ROD CPL
COUPLING LINK	10226402	18	4	588	99 24 594 14	ANCHORING ROD CPL
COUPLING LINK	10336761	11	8	542	99 26 417 14	ANCHORING ROD CPL
COUPLING LINK	10348694	11	4	588	99 24 594 14	ANCHORING ROD CPL
COUPLING LINK	10569443	11	2	570	11 93 702 0	ANCHORING ROD CPL
COUPLING LINK	11257246	11	2	561	11 93 703 7	ANCHORING ROD CPL
COUPLING LINK	949911014	7	4	581	11 28 629 9	MOUNTING PARTS
COUPLING PIECE	10594064	13	1	94	11 24 773 5	HYDR POWER UNIT
COUPLING PIECE	11290850	200	2	98	11 24 682 0	DISTRIBUTOR GEARBOX
COVER	10122317	1	1	307	10 14 637 4	LOCKING PIECES
COVER	10127967	1	1	302	10 12 797 9	LOCKING PIECES
COVER	10133334	8	1	115	10 11 834 9	DOUBLE V-PUMP
COVER	10134561	12	1	123	10 13 333 4	COVER
COVER	10149013	11	1	235	10 15 529 8	OIL SUMP PRE-ASS.
COVER	10520927	14	1	65	10 56 073 3	FUEL TANK CPL
COVER	10530487	7	1	47	10 53 048 9	FUSE HOLDER
COVER	10554227	11	1	651	11 30 694 4	RAIL CPL
COVER	10554228	12	1	651	11 30 694 4	RAIL CPL
COVER	10572054	14	4	681	11 89 568 6	SELF-LOADING SYSTEM RFK
COVER	10572241	3	1	459	10 55 154 8	QUICK RELEASE FITTING
COVER	10572242	3	1	514	10 55 157 6	QUICK RELEASE FITTING
COVER	10583346	10	1	311	11 24 114 6	COVER
COVER	10583347	11	1	311	11 24 114 6	COVER
COVER	10593544	48	2	402	11 27 970 6	CABIN CPL
COVER	10593554	49	1	402	11 27 970 6	CABIN CPL
COVER	10595280	12	2	192	10 58 017 0	RETURN PIPE
COVER	10687924	82	1	410	10 03 610 7	KEYBOARD OPERATING PANE
COVER	11217289	5	1	191	10 57 532 2	INTAKE PIPE OIL CPL
COVER	11219927	2	1	101	11 21 990 5	ADJUSTMENT
COVER	11219929	3	1	101	11 21 990 5	ADJUSTMENT
COVER	11226090	110	1	387	51 14 347 14	SG SAFETY BLOCK
COVER	11233332	148	1	30	11 28 647 6	VALVE BLOCK
COVER	11233333	150	2	30	11 28 647 6	VALVE BLOCK
COVER	11233338	151	8	30	11 28 647 6	VALVE BLOCK
COVER	11236709	3	1	706	11 21 750 0	LIQUEFIER
COVER	11241146	90	1	92	11 24 048 0	CENTRAL POWER UNIT
COVER	11252203	1	1	311	11 24 114 6	COVER
COVER	11252205	16	1	311	11 24 114 6	COVER
COVER	11252206	17	1	311	11 24 114 6	COVER
COVER	11252207	2	1	311	11 24 114 6	COVER
COVER	11252208	8	1	311	11 24 114 6	COVER
COVER	11252211	3	1	311	11 24 114 6	COVER
COVER	11252213	9	1	311	11 24 114 6	COVER
COVER	11252214	4	1	311	11 24 114 6	COVER
COVER	11252215	5	1	311	11 24 114 6	COVER
COVER	11252216	6	1	311	11 24 114 6	COVER
COVER	11262861	12	1	311	11 24 114 6	COVER
COVER	11267378	1	1	102	11 21 992 7	COVER
COVER	11267396	1	1	103	11 21 992 9	COVER
COVER	11301913	147	1	30	11 28 647 6	VALVE BLOCK
COVER	11357451	1	1	282	11 44 013 4	COVER PRE-ASS.

Description	Item	Pos.	Quantity	Sheet	Assembly	Description
COVER	11357453	2	1	282	11 44 013 4	COVER PRE-ASS.
COVER	385072014	65	2	77	10 58 163 4	CABIN SUSPENSION CPL
COVER	592287814	18	1	426	59 22 871 14	FRONT WINDOW CPL
COVER	7027755	3	1	215	10 30 300 7	FUEL PREFILTER
COVER	9275429	72	1	129	92 75 443	REPAIR SET LID
COVER	932037701	35	1	350	93 88 500 01	ROPE DRUM
COVER	939554301	20	1	350	93 88 500 01	ROPE DRUM
COVER	942264714	21	2	60	10 56 070 1	TANK HYDR CPL
COVER	949196514	8	2	370	99 29 258 14	LUG SHEAVE SET
COVER	949724114	23	2	590	99 23 398 14	ROLLER SET
COVER	971333403	13	1	467	11 89 365 0	CRAWLER CARRIER RIGHT CP
COVER	971333403	13	1	478	11 89 365 1	CRAWLER CARRIER LEFT CP
COVER LID	10036950	17	1	435	70 24 996	SEAT FRAME
COVER LID	10129382	7	1	264	10 13 508 0	HIGH PRESSURE CONNECTO
COVER LID	10129385	10	1	264	10 13 508 0	HIGH PRESSURE CONNECTO
COVER LID	11946452	220	1	432	11 93 934 6	AIR CONDITIONING
COVER PLATE	11213818	14	2	608	79 05 205 14	BOTTOM HOOK BLOCK
COVER PLATE	927509601	14	1	396	90 01 376 2	SLEWING GEAR DRIVE
COVER PRE-ASS.	11440134	1	1	281	10 14 611 7	COVERING ASSEMBLY
COVER UNDERSIDE	11249222	12	1	90	11 26 560 6	AGGREGATE DIESEL ENGINE
COVERING ASSEMBLY	10146117	342	1	224	12 42 545 4	DIESEL ENGINE
COVERS	11244091	1	1	313	11 24 409 0	PANELLING SUPERSTR. INSTA
COVERS	592290114	78	1	420	10 35 008 0	CABIN
CRADLE	11219922	2	1	100	11 21 990 2	DRIVING GEAR
CRANK HANDLE	616155414	10	1	519	61 61 541 14	CABLE DRUM
CRANKCASE BREATHER	10136800	1	1	232	10 14 201 8	CRANKCASE BREATHER ASS
CRANKCASE BREATHER ASS	10142018	16	1	223	12 42 545 4	DIESEL ENGINE
CRANKCASE CPL. WITH CYLIN	11389617	10	1	223	12 42 545 4	DIESEL ENGINE
CRANKCASE PRE-ASSY.	10154385	1	1	226	11 38 961 7	CRANKCASE CPL. WITH CYLIN
CRANKSHAFT ADD-ON PARTS	10141983	53	1	223	12 42 545 4	DIESEL ENGINE
CRANKSHAFT WITH GEAR	10147437	50	1	223	12 42 545 4	DIESEL ENGINE
CRAWLER CARRIER LEFT CP	11893651	11	1	443	11 89 364 8	UC CPL
CRAWLER CARRIER RIGHT CP	11893650	10	1	443	11 89 364 8	UC CPL
CRAWLER CARRIER ST.CON	11893689	1	1	467	11 89 365 0	CRAWLER CARRIER RIGHT CP
CRAWLERCARRIER LEFT ST.	11893687	1	1	478	11 89 365 1	CRAWLER CARRIER LEFT CP
CRIMPING CONTACT	605608401	44	24	516	11 90 151 1	CABLE LOOM 1 PIVOT PIECE E
CROSS BEAM ST.CONST.	10557217	11	1	647	10 55 601 0	FALL PROTECTION RFK
CROSS CONNECTOR	602731714	51	1	51	10 56 645 8	TERMINAL BOX
CROSS CONNECTOR	602812414	88	1	406	10 55 963 5	SWITCH CABINET X1
CROSS CONNECTOR	693138614	73	1	406	10 55 963 5	SWITCH CABINET X1
CROSS HANDLE 1 "	885391814	50	1	504	10 56 187 5	TOOL EQUIPMENT
CROSS STRAP	956507814	10	1	692	11 23 626 6	ROPE MOUNTING RFK
CROWBAR 1200 MM	790036914	12	1	505	10 56 183 8	TOOL
CROWBAR 600 MM	885400114	14	1	505	10 56 183 8	TOOL
CUTOFF RELAY	630120108	81	4	406	10 55 963 5	SWITCH CABINET X1
CYCLE VALVE	10149191	1	1	294	10 14 622 4	REGULATION BOOST PRESS
CYL	592138514	1	1	716	51 03 361 14	SINGLE-ACTING CYL
CYL HEAD ADD-ON	10131768	80	6	223	12 42 545 4	DIESEL ENGINE
CYL LOCK	10542435	1	1	412	38 50 944 14	SWITCHING HOUSING
CYL ROLLER BEARING	10573892	2	1	602	10 50 435 2	ROPE PULLEY
CYL ROLLER BEARING	11490216	34	2	150	10 14 360 7	REPAIR SET SWIVEL BEARIN
CYL ROLLER BEARING	7382149	34	1	127	90 77 464	RS FLANGE
CYL ROLLER BEARING	761001103	72	1	471	96 93 178 01	TRACTION DRIVE
CYL ROLLER BEARING	7610021	12	1	471	96 93 178 01	TRACTION DRIVE
CYL.NEEDLE BEARING	7469905	64	2	119	10 11 835 7	REPAIR KIT CONNECTION HO
CYL.NEEDLE BEARING	7469905	32	1	135	98 84 402	REPAIR KIT SHAFT
CYL.ROLLER		17	114	352	93 88 497 01	PLANETARY GEARBOX
CYLINDER	10007948	1	1	453	10 00 794 7	HYDRAULIC PARTS DRIVING G
CYLINDER	10154458	80	6	226	11 38 961 7	CRANKCASE CPL. WITH CYLIN
CYLINDER	10324901	2	1	170	10 32 489 2	DRIVING GEAR

Description	Item	Pos.	Quantity	Sheet	Assembly	Description
CYLINDER	7023838	1	1	390	11 94 017 6	HYDRAULIC PARTS DRIVING G
CYLINDER	7024273	111	1	621	51 02 322 14	OIL MOTOR
CYLINDER BUSHING	10153973	1	1	227	10 15 445 8	CYLINDER
CYLINDER HEAD COVER	10134695	1	1	250	10 13 469 6	CYLINDER HEAD COVER ASS
CYLINDER HEAD COVER	10134698	1	1	248	10 12 653 5	CYLINDER HEAD COVER ASS
CYLINDER HEAD COVER	10134750	1	1	247	10 13 475 1	CYLINDER HEAD COVER ASS
CYLINDER HEAD COVER ASS	10126535	83	1	223	12 42 545 4	DIESEL ENGINE
CYLINDER HEAD COVER ASS	10134696	84	2	223	12 42 545 4	DIESEL ENGINE
CYLINDER HEAD COVER ASS	10134751	82	3	223	12 42 545 4	DIESEL ENGINE
CYLINDER HEAD GASKET	10133667	2	1	244	10 13 176 8	CYL HEAD ADD-ON
CYLINDER HEAD PRE-ASSY.	10145864	1	1	244	10 13 176 8	CYL HEAD ADD-ON
CYLINDER LOCK	592289714	3	1	427	59 22 895 14	FLAP CPL
CYLINDER WITH BUSHING	9075894	1	1	131	98 89 833	RK CYLINDER+CONTROL PLAT
CYLINDRICAL ROLLER BEARIN	7380070	33	1	148	10 13 802 7	REPAIR KIT SHAFT
CYLINDRICAL ROLLER BEARIN	7380106	33	1	135	98 84 402	REPAIR KIT SHAFT
CYLINDRICAL ROLLER BEARIN	746310401	5	2	474	94 44 065 03	PLANET WHEEL
CYLINDRICAL ROLLER BEARIN	746413001	5	2	473	94 44 048 03	PLANET WHEEL
CYLINDRICAL ROLLER BEARIN	746506601	5	2	472	94 44 043 03	PLANET WHEEL
DATA CARD CF2	10541109	32	1	406	10 55 963 5	SWITCH CABINET X1
DEEP GROOVE BALL BEARIN		3	1	352	93 88 497 01	PLANETARY GEARBOX
DEEP GROOVE BALL BEARIN	10350232	290	4	98	11 24 682 0	DISTRIBUTOR GEARBOX
DEEP GROOVE BALL BEARIN	10592555	30	1	380	99 04 645 14	DRIVE
DEEP GROOVE BALL BEARIN	616155214	4	2	519	61 61 541 14	CABLE DRUM
DEEP GROOVE BALL BEARIN	745120514	20	2	640	99 10 116 14	ROPE GUIDE
DEEP GROOVE BALL BEARIN	745128314	40	1	627	54 02 703 14	FLANGE CPL
DEEP GROOVE BALL BEARIN	745141001	66	1	396	90 01 376 2	SLEWING GEAR DRIVE
DEEP GROOVE BALL BEARIN	745141814	280	6	98	11 24 682 0	DISTRIBUTOR GEARBOX
DEEP GROOVE BALL BEARIN	745194714	12	1	629	54 02 705 14	DRIVE UNIT CPL
DEEP GROOVE BALL BEARIN	745906614	6	1	627	54 02 703 14	FLANGE CPL
DEEP GROOVE BALL BEARIN	745907514	23	1	628	54 02 704 14	POWER TAKE-OFF CPL
DEEP GROOVE BALL BEARIN	746171514	18	2	361	10 51 968 6	LUG SUPERSTRUCTURE CPL
DEFLECTION PULLEY CPL	991413714	32	1	538	11 24 444 4	A-FRAME 1 CPL
DESIGNATION CARD	602835914	52	1	51	10 56 645 8	TERMINAL BOX
DEVICE PLUG	10296818	92	1	517	11 90 151 1	CABLE LOOM 1 PIVOT PIECE E
DIAPHRAGM	10558762	34	1	467	11 89 365 0	CRAWLER CARRIER RIGHT CP
DIAPHRAGM	10558762	34	1	478	11 89 365 1	CRAWLER CARRIER LEFT CP
DIAPHRAGM	11235482	35	2	480	11 31 390 8	CENTRE PART CPL
DIAPHRAGM ACCUMULATOR	592274714	6	2	446	11 89 300 5	TUBING HYDR
DIAPHRAGM ACCUMULATOR	592274714	4	1	513	10 51 826 1	PIVOT PIECE HYDR
DIESEL ENGINE	12425454	66	1	92	11 24 048 0	CENTRAL POWER UNIT
DIESEL ENGINE MODIFIC.	11930987	1	1	5	11 93 045 7	MODIFICATION KIT RFK
DIRECTIONAL CONTROL VALV	10540182	230	1	387	51 14 347 14	SG SAFETY BLOCK
DIRECTIONAL CONTROL VALV	10591435	8	1	34	10 35 148 6	VALVE BLOCK
DIRECTIONAL CONTROL VALV	11223305	2	2	38	59 21 458 14	VALVE BLOCK
DIRECTIONAL CONTROL VALV	11229184	7	1	34	10 35 148 6	VALVE BLOCK
DIRECTIONAL CONTROL VALV	11233727	1	1	87	10 22 540 8	VALVE BLOCK
DIRECTIONAL CONTROL VALV	11286481	2	2	20	11 29 618 6	SUPERSTRUCTURE HYDR
DIRECTIONAL CONTROL VALV	510427214	6	2	34	10 35 148 6	VALVE BLOCK
DIRECTIONAL CONTROL VALV	510427214	5	1	620	10 51 726 2	TUBING HYDR
DIRECTIONAL CONTROL VALV	510429214	4	1	528	10 51 959 1	TUBING HYDR
DIRECTIONAL CONTROL VALV	511432714	11	5	20	11 29 618 6	SUPERSTRUCTURE HYDR
DIRECTIONAL CONTROL VALV	511432714	4	1	345	10 51 969 8	NEEDLE LUFFING WINCH HYD
DIRECTIONAL CONTROL VALV	511432714	3	1	362	10 51 968 7	MAIN LUG HYDR
DIRECTIONAL CONTROL VALV	511432714	10	1	715	10 56 173 5	TUBING HYDR
DIRECTIONAL CONTROL VALV	511480614	2	1	690	10 55 459 4	TUBING HYDR
DIRECTIONAL CTRL. VALVE	10224607	2	1	678	11 89 408 3	TUBING HYDR
DIRECTIONAL CTRL. VALVE	510403414	14	4	446	11 89 300 5	TUBING HYDR
DISC SPRING	7024282	117	4	621	51 02 322 14	OIL MOTOR
DISH	10098157	60	11	315	11 24 409 0	PANELLING SUPERSTR. INSTA
DISH	10098157	18	20	329	10 54 591 0	MOTOR COWLING

Description	Item	Pos.	Quantity	Sheet	Assembly	Description
DISH	10098157	12	28	483	99 26 718 14	PEDESTAL
DISH	10098157	42	53	510	11 23 820 3	PIVOT PIECE CPL
DISH	10098157	20	6	521	10 58 193 7	GRATING CPL
DISH	10098157	21	3	552	11 28 390 8	BOOM ACCESS
DISH	10098157	12	2	553	11 28 391 3	FIXING CLAMP
DISH	10098157	21	3	568	11 28 583 8	BOOM ACCESS
DISH	10098157	21	3	575	11 28 626 1	BOOM ACCESS
DISH	10098157	21	4	581	11 28 629 9	MOUNTING PARTS
DISH	10098157	10	12	635	11 24 147 8	UC PLATFORM
DISH	10098157	10	28	636	11 24 575 5	PEDESTAL
DISH	10098157	13	4	649	10 55 280 7	GRATING CPL
DISH	10098157	15	3	651	11 30 694 4	RAIL CPL
DISH	10098157	5	2	652	11 23 827 7	ROPE GUARD
DISH	10098157	12	1	653	11 30 567 0	TRANSPORT LASHING
DISH	10098157	11	18	657	10 55 514 8	FALL PROTECTION RFK
DISPLACEMENT PISTON	10287733	1	1	179	10 28 766 5	ADJUSTING PIECE
DISTANCE RING 42X51X1.3 C	9072437	10	1	128	90 72 436	SPACER RING SET
DISTANCE RING 42X51X1.4 C	9072438	11	1	128	90 72 436	SPACER RING SET
DISTANCE RING 42X51X1.5 C	9072439	12	1	128	90 72 436	SPACER RING SET
DISTANCE RING 42X51X1.6 C	9072440	13	1	128	90 72 436	SPACER RING SET
DISTANCE RING 42X51X1.9 C	9074332	33	1	128	90 72 436	SPACER RING SET
DISTANCE RING 91/127X8 S35	956803514	24	2	590	99 23 398 14	ROLLER SET
DISTANCE RING CK75;DIN 17	9074307	31	1	128	90 72 436	SPACER RING SET
DISTANCE RING CK75;DIN 17	9074308	32	1	128	90 72 436	SPACER RING SET
DISTANCE SLEEVE	11217169	47	6	217	11 24 114 5	ASSEMBLY INSTAL.
DISTANCE SLEEVE 11X21X45	10141438	7	24	289	10 14 144 4	EXHAUST PIPE ASSEMBLY
DISTANCE SLEEVE 18X8.5X10	9132577	2	4	291	10 14 737 0	HEAT PROTECTION W.FASTEN
DISTANCE SLEEVE 18X8.5X10	9132577	93	1	305	10 15 028 8	CABLE HARNESS MOUNTING
DISTANCE TUBE	11493578	14	2	601	79 04 112 14	BOTTOM HOOK BLOCK
DISTANCE WASHER	10226471	14	1	426	59 22 871 14	FRONT WINDOW CPL
DISTANCE WASHER RD30X1	10349263	52	24	315	11 24 409 0	PANELLING SUPERSTR. INSTA
DISTRIBUTOR BLOCK	10151825	5	1	269	10 14 333 9	FUEL LINES
DISTRIBUTOR GEARBOX	11246820	1	1	94	11 24 773 5	HYDR POWER UNIT
DOOR	10565777	1	1	327	10 56 580 8	DOOR
DOOR	10565808	13	1	317	11 24 409 1	COVERS
DOOR	10566237	6	1	317	11 24 409 1	COVERS
DOOR	10566238	1	1	326	10 56 623 7	DOOR
DOOR	10578835	3	1	317	11 24 409 1	COVERS
DOOR	10578836	1	1	321	10 57 883 5	DOOR
DOOR	10578972	1	1	323	10 57 897 6	DOOR
DOOR	10578976	4	5	317	11 24 409 1	COVERS
DOOR	10579397	1	1	325	10 57 940 0	DOOR
DOOR	10579400	5	1	317	11 24 409 1	COVERS
DOOR ACCESSORIES	10226454	2	1	419	10 35 008 0	CABIN
DOOR HANDLE INTERNAL	10226473	19	1	423	10 35 007 6	SLIDING DOOR
DOOR HANDLE INTERNAL	10226478	21	1	423	10 35 007 6	SLIDING DOOR
DOOR LOCK	10353879	20	1	321	10 57 883 5	DOOR
DOOR LOCK	10353879	3	1	323	10 57 897 6	DOOR
DOOR LOCK	10353879	10	1	325	10 57 940 0	DOOR
DOOR LOCK	10353879	10	1	326	10 56 623 7	DOOR
DOOR LOCK	10353879	6	1	327	10 56 580 8	DOOR
DOOR SEAL	592285714	3	1	423	10 35 007 6	SLIDING DOOR
DOOR WEDGE	790549214	15	9	319	11 24 409 1	COVERS
DOOR WEDGE STOP	790549314	9	1	321	10 57 883 5	DOOR
DOOR WEDGE STOP	790549314	9	1	323	10 57 897 6	DOOR
DOOR WEDGE STOP	790549314	11	1	325	10 57 940 0	DOOR
DOOR WEDGE STOP	790549314	11	1	326	10 56 623 7	DOOR
DOOR WEDGE STOP	790549314	9	1	327	10 56 580 8	DOOR
DOUBLE BANJO BOLT 6X6 9S	10014864	7	1	270	10 14 588 5	LEAK OIL RETURN LINE
DOUBLE NON-RETURN VALVE	511607014	6	1	528	10 51 959 1	TUBING HYDR

Description	Item	Pos.	Quantity	Sheet	Assembly	Description
DOUBLE PLUG	10424238	30	3	106	11 21 993 0	PUMP HOUSING
DOUBLE PLUG	7012971	29	3	106	11 21 993 0	PUMP HOUSING
DOUBLE PLUG	7012971	31	1	455	11 22 473 8	ADJUSTMENT
DOUBLE PLUG	7022127	31	1	168	11 22 127 4	PUMP ELEMENT
DOUBLE PLUG	7022127	31	1	177	11 21 593 6	PUMP ELEMENT
DOUBLE PLUG	7022127	28	5	455	11 22 473 8	ADJUSTMENT
DOUBLE PRESSURE LIMITING	10537607	10	2	34	10 35 148 6	VALVE BLOCK
DOUBLE T-MASTER SWITCH	10511274	15	1	2	01 38 376 14	LR 1300 SX
DOUBLE V-PUMP	10118349	4	1	94	11 24 773 5	HYDR POWER UNIT
DOUBLE-ACTING CYL	10099173	2	2	528	10 51 959 1	TUBING HYDR
DOUBLE-ACTING CYL	10227855	1	2	661	10 51 971 2	SELF-LOADING SYSTEM HYD
DOUBLE-ACTING CYL	513313914	10	2	20	11 29 618 6	SUPERSTRUCTURE HYDR
DOUBLE-ACTING CYL	513314114	13	4	446	11 89 300 5	TUBING HYDR
DOUBLE-ACTING CYL	592000814	3	1	702	10 51 728 1	TUBING HYDR
DOUBLE-ACTING CYL	592104114	2	2	85	10 51 969 5	A-FRAME ERECTION HYDR
DOUBLE-ACTING CYL	592104214	2	1	668	10 51 973 8	SELF-LOADING SYSTEM HYD
DOUBLE-ENDED STUD DIN 835	10489376	3	3	275	10 14 736 4	AIR INTAKE ASSEMBLY
DOUBLE-ENDED STUD DIN 835	4901450	4	3	296	10 12 037 2	STARTER INSTALLATION
DOUBLE-ENDED STUD DIN 83	4038502	13	3	235	10 15 529 8	OIL SUMP PRE-ASS.
DOUBLE-ENDED STUD DIN 939	4068017	60	6	65	10 56 073 3	FUEL TANK CPL
DOUBLE-ENDED STUD DIN 93	11934656	125	4	30	11 28 647 6	VALVE BLOCK
DOUBLE-ENDED STUD DIN 93	11690424	10	1	293	10 14 511 2	EXHAUST NOZZLE ATTACHM
DOUBLE-ENDED STUD M16X1.	9275003	20	8	119	10 11 835 7	REPAIR KIT CONNECTION HO
DOWEL PIN DIN 1481 5X16 ST	11226135	170	1	387	51 14 347 14	SG SAFETY BLOCK
DOWEL PIN ISO 13337 8X10 S	4980638	44	2	151	10 12 224 5	REPAIR KIT LEVER
DOWEL PIN ISO 8752 2X6 ST	11001743	6	1	264	10 13 508 0	HIGH PRESSURE CONNECTO
DOWEL PIN ISO 8752 5X12 ST		59	2	352	93 88 497 01	PLANETARY GEARBOX
DOWEL PIN ISO 8752 5X16	432003714	97	2	511	11 23 820 3	PIVOT PIECE CPL
DOWEL PIN ISO 8752 8X16 ST		72	1	352	93 88 497 01	PLANETARY GEARBOX
DOWEL PIN ISO 8752 8X16 ST	432008001	78	1	471	96 93 178 01	TRACTION DRIVE
DRAIN COUPLING	7402657	1	1	507	91 76 658 14	DRAIN HOSE CPL
DRAIN HOSE CPL	917665814	31	1	504	10 56 187 5	TOOL EQUIPMENT
DRAIN TAP	11696074	16	1	215	10 30 300 7	FUEL PREFILTER
DRIVE	11893214	4	1	489	10 53 039 8	WINCH
DRIVE	990464514	10	1	378	99 04 941 14	DRIVE UNIT
DRIVE FLANGE	606279014	20	1	497	11 22 050 0	WINCHES INSTALLATION
DRIVE FLANGE	606279014	20	1	503	11 22 050 1	WINCHES INSTALLATION
DRIVE FLANGE	606281114	46	1	45	11 24 519 0	SUPERSTRUCTURE EL
DRIVE SHAFT		5	1	352	93 88 497 01	PLANETARY GEARBOX
DRIVE SHAFT	944434903	50	1	471	96 93 178 01	TRACTION DRIVE
DRIVE SLEEVE	11223233	4	1	380	99 04 645 14	DRIVE
DRIVE SLEEVE	540272914	4	1	629	54 02 705 14	DRIVE UNIT CPL
DRIVE UNIT	990494114	2	1	359	10 51 969 1	LUG SUPERSTRUCTURE CPL
DRIVE UNIT CPL	540270514	24	1	624	59 20 694 14	WINCH
DRIVER	10348618	13	1	711	10 52 293 0	SG TACHOGENERATOR RFK
DRIVER INSTALLATION	10552681	20	1	18	11 24 047 9	SUPERSTRUCTURE CPL
DRIVING GEAR	10287664	1	1	177	11 21 593 6	PUMP ELEMENT
DRIVING GEAR	10287725	1	1	178	10 28 766 4	DRIVING GEAR
DRIVING GEAR	10324889	1	1	168	11 22 127 4	PUMP ELEMENT
DRIVING GEAR	10324892	1	1	169	10 32 488 9	DRIVING GEAR
DRIVING GEAR	10503513	1	1	451	51 24 059 14	VARIABLE DISPLACEMENT MO
DRIVING GEAR	11219902	1	1	99	10 53 430 7	V PUMP
DRIVING GEAR	7023828	1	1	388	51 22 991 14	OIL MOTOR
DRIVING SHAFT	11219920	1	1	100	11 21 990 2	DRIVING GEAR
DRIVING SHAFT	11940177	2	1	389	70 23 828	DRIVING GEAR
DRIVING SHAFT	11940205	2	1	391	11 94 017 7	DRIVING SHAFT
DRUM	938850101	1	1	350	93 88 500 01	ROPE DRUM
DRUM BODY	10227104	1	1	519	61 61 541 14	CABLE DRUM
DRYER	11236711	4	1	706	11 21 750 0	LIQUEFIER
DSF RING	10146358	5	1	243	10 14 636 7	PISTON CPL.

Description	Item	Pos.	Quantity	Sheet	Assembly	Description
DUST CAP	605013508	53	1	516	11 90 151 1	CABLE LOOM 1 PIVOT PIECE E
DUST CAP	605013508	51	2	539	10 53 120 7	A-FRAME ELECTRICS
EARTH CONNECTION PLATE	9080911	4	1	277	90 78 314	HEATING FLANGE ADD-ON
EASY-CHANGE FILTER	10297295	1	2	257	10 14 294 2	LUBE OIL FILTER ASSEMBLY
ECCENTRIC SCREW	11267405	46	1	106	11 21 993 0	PUMP HOUSING
EDGE PROTECTION METER W	226016702	29	2.18	331	11 24 922 2	COVER UNDERSIDE
EDGE PROTECTION METER W	226016702	30	1.11	331	11 24 922 2	COVER UNDERSIDE
EDGE PROTECTION METER W	226016702	31	1.19	331	11 24 922 2	COVER UNDERSIDE
EDGE PROTECTION METER W	226016702	33	1.24	331	11 24 922 2	COVER UNDERSIDE
EDGE PROTECTION METER W	226016702	34	1.29	331	11 24 922 2	COVER UNDERSIDE
EDGE PROTECTION METER W	226016702	35	0.57	331	11 24 922 2	COVER UNDERSIDE
EDGE PROTECTION METER W	226016702	36	0.85	331	11 24 922 2	COVER UNDERSIDE
EDGE PROTECTION METER W	226016702	37	1.2	331	11 24 922 2	COVER UNDERSIDE
EDGE PROTECTION METER W	226016702	39	0.36	331	11 24 922 2	COVER UNDERSIDE
EDGE PROTECTION METER W	226016702	40	0.35	331	11 24 922 2	COVER UNDERSIDE
EDGE PROTECTION METER W	226016702	22	0.45	518	91 92 528 14	CABLE DRUM
EDGE PROTECTION METER W	226017802	76	4	511	11 23 820 3	PIVOT PIECE CPL
EDGE PROTECTION METER W	226017802	13	1.132	549	11 24 570 3	BOOM INTERMEDIATE SECTIO
EDGE PROTECTION METER W	226017802	13	1.132	567	11 24 570 9	BOOM INTERMEDIATE SECTIO
EDGE PROTECTION METER W	226017802	13	1.132	574	11 24 571 5	BOOM INTERMEDIATE SECTIO
EDGE SEALING RING	10588729	5	1	530	59 20 224 14	LOAD HOLDING VALVE
ELBOW	10153669	1	1	286	10 14 274 2	COOLANT PIPE BEND ADD-ON
ELBOW	550789808	16	1	207	11 24 114 2	SUCTION UNIT AIR
ELBOW PIECE	592287714	17	1	426	59 22 871 14	FRONT WINDOW CPL
ELBOW PIECE	7412268	37	2	45	11 24 519 0	SUPERSTRUCTURE EL
ELECTR.CABLE	10870540	251	10.7	51	10 56 645 8	TERMINAL BOX
ELECTRONIC MODULES	10688831	31	1	613	11 90 722 6	MODEM RFK
EMERGENCY OPERATION EL	11250162	447	1	3	01 38 376 14	LR 1300 SX
EMERGENCY STOP BUTTON	10875360	39	3	45	11 24 519 0	SUPERSTRUCTURE EL
EMERGENCY STOP BUTTON	693073014	33	1	414	11 26 095 7	CONTROL STAND RIGHT
EMERGENCY STOP BUTTON	693073014	33	1	724	10 52 155 9	MODULE REFUELLING SYSTE
EMERGENCY STOP SIGN	606718408	35	1	414	11 26 095 7	CONTROL STAND RIGHT
ENCLOSURE CPL	10445126	3	1	513	10 51 826 1	PIVOT PIECE HYDR
ENCLOSURE CPL	10445127	20	2	446	11 89 300 5	TUBING HYDR
END ANGLE	602720514	28	4	51	10 56 645 8	TERMINAL BOX
END COVER	10599796	13	1	200	11 28 734 7	EQUALIZING RESERVOIR
END COVER	11241269	12	1	200	11 28 734 7	EQUALIZING RESERVOIR
END COVER	4001664	3	11	226	11 38 961 7	CRANKCASE CPL. WITH CYLIN
END COVER	4980362	2	6	226	11 38 961 7	CRANKCASE CPL. WITH CYLIN
END COVER	9144757	4	1	248	10 12 653 5	CYLINDER HEAD COVER ASS
END WASHER EL	939556301	9	1	350	93 88 500 01	ROPE DRUM
ENGINE CONTROL SENSORS	10142977	581	1	225	12 42 545 4	DIESEL ENGINE
EQUALIZING RESERVOIR	11287347	11	1	195	11 24 114 0	COOLER INSTALLATION WATE
EQUIPMENT MOUNTING	10445629	1	2	440	11 30 962 5	HOLDER CPL
EVAPORATOR	592293614	230	1	432	11 93 934 6	AIR CONDITIONING
EXHAUST FLAP	10153118	1	1	293	10 14 511 2	EXHAUST NOZZLE ATTACHM
EXHAUST FLAP	11299163	13	1	211	11 24 114 3	EXHAUST GAS SYSTEM
EXHAUST GAS SYSTEM	11241143	40	1	92	11 24 048 0	CENTRAL POWER UNIT
EXHAUST GAS SYSTEM	11900325	70	1	92	11 24 048 0	CENTRAL POWER UNIT
EXHAUST MIXING PIPE	10148669	4	1	308	11 90 032 5	EXHAUST GAS SYSTEM
EXHAUST NOZZLE	10146274	3	1	293	10 14 511 2	EXHAUST NOZZLE ATTACHM
EXHAUST NOZZLE ATTACHM	10145112	432	1	224	12 42 545 4	DIESEL ENGINE
EXHAUST PIPE ASSEMBLY	10141444	410	1	224	12 42 545 4	DIESEL ENGINE
EXHAUST PIPE PRE-ASS.	10141443	1	1	289	10 14 144 4	EXHAUST PIPE ASSEMBLY
EXHAUST TAIL PIPE	11248175	7	1	211	11 24 114 3	EXHAUST GAS SYSTEM
EXHAUST TC MOUNTING	10140136	430	1	224	12 42 545 4	DIESEL ENGINE
EXPANSION VALVE	10223210	170	1	432	11 93 934 6	AIR CONDITIONING
EXTENSION 1 " X 410MM	885392414	45	1	504	10 56 187 5	TOOL EQUIPMENT
EXTENSION CABLE	614027114	74	1	403	11 27 973 6	CABIN EL
FALL PROTECTION CPL	10556011	10	1	647	10 55 601 0	FALL PROTECTION RFK

Description	Item	Pos.	Quantity	Sheet	Assembly	Description
FALL PROTECTION RFK	10555148	625	1	3	01 38 376 14	LR 1300 SX
FALL PROTECTION RFK	10556010	620	1	3	01 38 376 14	LR 1300 SX
FALL PROTECTION RFK	10557224	626	1	3	01 38 376 14	LR 1300 SX
FAN	10223209	80	1	432	11 93 934 6	AIR CONDITIONING
FAN	10352188	5	1	43	10 22 592 5	COOLER MOTOR
FAN	11267555	10	1	198	10 57 423 7	COOLER MOTOR
FAN	11932243	4	1	203	10 57 423 9	COOLER MOTOR
FAN BOX	11946423	380	1	432	11 93 934 6	AIR CONDITIONING
FAN COVER	10223362	10	1	321	10 57 883 5	DOOR
FAN COVER	10565889	2	1	327	10 56 580 8	DOOR
FAN COWL	10352186	2	1	43	10 22 592 5	COOLER MOTOR
FAN COWL	11932245	2	1	203	10 57 423 9	COOLER MOTOR
FAN MOTOR	11236708	2	1	706	11 21 750 0	LIQUEFIER
FASTENER	10350632	10	1	546	10 35 063 3	FASTENER
FASTENER	10350633	11	2	544	11 28 594 7	SUPPORT CPL
FASTENER	10350633	11	2	564	11 28 619 1	SUPPORT CPL
FASTENER	10350633	11	2	571	11 28 653 4	SUPPORT CPL
FASTENER	10588168	18	1	77	10 58 163 4	CABIN SUSPENSION CPL
FASTENING BRACKET	11219861	10	1	563	11 23 292 2	SUPPORT CPL
FASTENING BS	11230237	44	9	538	11 24 444 4	A-FRAME 1 CPL
FASTENING CLAMP	7362546	55	16	217	11 24 114 5	ASSEMBLY INSTAL.
FASTENING CLAMP	7382085	40	2	305	10 15 028 8	CABLE HARNESS MOUNTING
FASTENING CLIP	10350978	32	1	94	11 24 773 5	HYDR POWER UNIT
FASTENING DEVICE	10153373	5	1	280	10 14 286 0	AIR COND. COMPRESSOR A
FASTENING SCREW	602134114	59	4	51	10 56 645 8	TERMINAL BOX
FELT STRIP	10585445	12	2	626	54 02 702 14	ROPE DRUM CPL
FEMALE INSERT	605609514	94	1	46	11 24 519 0	SUPERSTRUCTURE EL
FEMALE INSERT	605609514	32	1	51	10 56 645 8	TERMINAL BOX
FEMALE INSERT	605609514	62	1	516	11 90 151 1	CABLE LOOM 1 PIVOT PIECE E
FEMALE INSERT	605609514	51	1	595	97 14 959 03	HOIST LIMIT SWITCH EL
FEMALE INSERT	605612014	42	1	51	10 56 645 8	TERMINAL BOX
FEMALE INSERT	605612014	72	1	517	11 90 151 1	CABLE LOOM 1 PIVOT PIECE E
FERRULE	773920008	26	6	584	10 59 863 3	PENDULUM CPL
FERRULE	773920008	13	4	597	11 25 204 2	SUPPORT CPL
FILING DESK	970857103	32	1	313	11 24 409 0	PANELLING SUPERSTR. INSTA
FILLER NECK	944215103	1	1	398	92 76 934 01	OIL FILLER NECK
FILLER NECK CONNECTION	10448187	14	1	70	11 27 315 5	CENTRAL GREASING
FILLER SIEVE	10296919	13	1	65	10 56 073 3	FUEL TANK CPL
FILTER	11490265	38	1	106	11 21 993 0	PUMP HOUSING
FILTER	11490265	39	1	106	11 21 993 0	PUMP HOUSING
FILTER	11490265	40	1	106	11 21 993 0	PUMP HOUSING
FILTER	592293714	240	2	432	11 93 934 6	AIR CONDITIONING
FILTER BLOWER INSTALLATIO	611052614	61	1	403	11 27 973 6	CABIN EL
FILTER BRACKET	12455374	1	1	268	10 14 675 3	FUEL FINE FILTER
FILTER ELEMENT	11291031	1	1	209	11 24 679 0	AIR FILTER
FILTER ELEMENT	510713814	1	1	63	51 06 906 14	AERATION FILTER
FILTER ELEMENT	553183708	6	1	215	10 30 300 7	FUEL PREFILTER
FILTER INSERT	10037623	1	1	183	10 22 358 1	PRESSURE FILTER
FILTER INSERT	11227203	1	1	62	10 51 572 4	RETURN FILTER
FILTER MAT	611124514	1	1	416	61 10 526 14	FILTER BLOWER INSTALLATIO
FINAL CONTROL VALVE	10138450	14	1	223	12 42 545 4	DIESEL ENGINE
FIRE EXTINGUISHER	890100814	10	1	75	92 65 477 14	FIRE EXTINGUISHER RFK
FIRE EXTINGUISHER MOUNT	10578845	31	2	18	11 24 047 9	SUPERSTRUCTURE CPL
FIRE EXTINGUISHER RFK	926547714	10	1	74	10 57 884 5	FIRE EXTINGUISHER MOUNT
FIRST-AID KIT	789011714	13	1	2	01 38 376 14	LR 1300 SX
FITTING		80	1	352	93 88 497 01	PLANETARY GEARBOX
FITTING		83	3	352	93 88 497 01	PLANETARY GEARBOX
FITTING	10035314	35	1	8	11 92 958 8	AIR DUCT CPL
FITTING	10035314	20	1	212	11 24 114 4	FUEL SYSTEM
FITTING	10225291	710	3	26	11 29 618 6	SUPERSTRUCTURE HYDR

Description	Item	Pos.	Quantity	Sheet	Assembly	Description
FITTING	10288174	32	1	8	11 92 958 8	AIR DUCT CPL
FITTING	10531725	616	1	95	11 24 773 5	HYDR POWER UNIT
FITTING	10597776	620	4	385	10 55 216 1	TUBING HYDR
FITTING	10663840	28	1	8	11 92 958 8	AIR DUCT CPL
FITTING	10663840	24	4	217	11 24 114 5	ASSEMBLY INSTAL.
FITTING	10801399	17	2	293	10 14 511 2	EXHAUST NOZZLE ATTACHM
FITTING	10813933	6	1	14	11 41 475 7	ACCESSORIES AIR COMPRES
FITTING	10813933	9	2	270	10 14 588 5	LEAK OIL RETURN LINE
FITTING	10813934	18	1	293	10 14 511 2	EXHAUST NOZZLE ATTACHM
FITTING	10813935	12	2	270	10 14 588 5	LEAK OIL RETURN LINE
FITTING	10816958	49	1	217	11 24 114 5	ASSEMBLY INSTAL.
FITTING	10872598	30	1	8	11 92 958 8	AIR DUCT CPL
FITTING	11002988	4	1	260	10 15 278 7	SEAL KIT HIGH PRESSURE P
FITTING	11002988	9	1	269	10 14 333 9	FUEL LINES
FITTING	11067653	8	2	214	10 55 091 1	ADD-ON PRELIMINARY FUEL F
FITTING	11229464	3	1	214	10 55 091 1	ADD-ON PRELIMINARY FUEL F
FITTING	11262806	10	1	71	11 26 557 2	MOUNTING PARTS
FITTING	11600199	38	1	8	11 92 958 8	AIR DUCT CPL
FITTING	11910325	190	1	529	10 09 917 3	DOUBLE-ACTING CYL
FITTING	11926905	28	1	217	11 24 114 5	ASSEMBLY INSTAL.
FITTING	11926906	26	1	8	11 92 958 8	AIR DUCT CPL
FITTING	11926906	26	5	217	11 24 114 5	ASSEMBLY INSTAL.
FITTING	247000902	31	1	8	11 92 958 8	AIR DUCT CPL
FITTING	247000902	11	4	217	11 24 114 5	ASSEMBLY INSTAL.
FITTING	247001802	613	2	668	10 51 973 8	SELF-LOADING SYSTEM HYD
FITTING	247009202	649	6	24	11 29 618 6	SUPERSTRUCTURE HYDR
FITTING	247009202	606	2	95	11 24 773 5	HYDR POWER UNIT
FITTING	247009202	644	1	448	11 89 300 5	TUBING HYDR
FITTING	247009202	611	2	513	10 51 826 1	PIVOT PIECE HYDR
FITTING	247009402	724	10	26	11 29 618 6	SUPERSTRUCTURE HYDR
FITTING	247009402	609	1	85	10 51 969 5	A-FRAME ERECTION HYDR
FITTING	247009402	605	4	95	11 24 773 5	HYDR POWER UNIT
FITTING	247009402	606	1	345	10 51 969 8	NEEDLE LUFFING WINCH HYD
FITTING	247009402	610	1	362	10 51 968 7	MAIN LUG HYDR
FITTING	247009402	605	2	385	10 55 216 1	TUBING HYDR
FITTING	247009402	706	2	715	10 56 173 5	TUBING HYDR
FITTING	247009702	612	13	22	11 29 618 6	SUPERSTRUCTURE HYDR
FITTING	247009702	608	1	85	10 51 969 5	A-FRAME ERECTION HYDR
FITTING	247009702	602	10	95	11 24 773 5	HYDR POWER UNIT
FITTING	247009702	21	1	212	11 24 114 4	FUEL SYSTEM
FITTING	247009702	604	1	385	10 55 216 1	TUBING HYDR
FITTING	247009702	603	4	446	11 89 300 5	TUBING HYDR
FITTING	247009702	711	1	486	11 26 260 6	WINCH 1 HYDR
FITTING	247009702	711	1	501	11 26 261 1	WINCH 2 HYDR
FITTING	247009702	610	3	513	10 51 826 1	PIVOT PIECE HYDR
FITTING	247009702	604	1	620	10 51 726 2	TUBING HYDR
FITTING	247009702	701	1	678	11 89 408 3	TUBING HYDR
FITTING	247009902	675	5	24	11 29 618 6	SUPERSTRUCTURE HYDR
FITTING	247009902	610	7	95	11 24 773 5	HYDR POWER UNIT
FITTING	247009902	601	6	446	11 89 300 5	TUBING HYDR
FITTING	247010102	611	4	22	11 29 618 6	SUPERSTRUCTURE HYDR
FITTING	247010102	604	4	95	11 24 773 5	HYDR POWER UNIT
FITTING	247010102	609	2	513	10 51 826 1	PIVOT PIECE HYDR
FITTING	247011602	610	1	22	11 29 618 6	SUPERSTRUCTURE HYDR
FITTING	247011602	307	1	95	11 24 773 5	HYDR POWER UNIT
FITTING	247011602	22	1	212	11 24 114 4	FUEL SYSTEM
FITTING	247011602	613	2	446	11 89 300 5	TUBING HYDR
FITTING	247011602	603	1	513	10 51 826 1	PIVOT PIECE HYDR
FITTING	247020902	654	3	24	11 29 618 6	SUPERSTRUCTURE HYDR
FITTING	247020902	316	1	95	11 24 773 5	HYDR POWER UNIT

Description	Item	Pos.	Quantity	Sheet	Assembly	Description
FITTING	247027002	716	1	26	11 29 618 6	SUPERSTRUCTURE HYDR
FITTING	247027202	609	1	22	11 29 618 6	SUPERSTRUCTURE HYDR
FITTING	247027302	718	2	26	11 29 618 6	SUPERSTRUCTURE HYDR
FITTING	247027302	32	2	217	11 24 114 5	ASSEMBLY INSTAL.
FITTING	247027302	602	4	446	11 89 300 5	TUBING HYDR
FITTING	247027402	606	1	513	10 51 826 1	PIVOT PIECE HYDR
FITTING	247040302	680	1	24	11 29 618 6	SUPERSTRUCTURE HYDR
FITTING	247040302	605	1	345	10 51 969 8	NEEDLE LUFFING WINCH HYD
FITTING	247040902	739	2	26	11 29 618 6	SUPERSTRUCTURE HYDR
FITTING	247040902	34	2	217	11 24 114 5	ASSEMBLY INSTAL.
FITTING	247041102	39	1	8	11 92 958 8	AIR DUCT CPL
FITTING	247041102	203	1	22	11 29 618 6	SUPERSTRUCTURE HYDR
FITTING	247041102	608	3	95	11 24 773 5	HYDR POWER UNIT
FITTING	247041102	608	4	446	11 89 300 5	TUBING HYDR
FITTING	247041402	607	3	95	11 24 773 5	HYDR POWER UNIT
FITTING	247041502	749	2	26	11 29 618 6	SUPERSTRUCTURE HYDR
FITTING	247041502	30	2	217	11 24 114 5	ASSEMBLY INSTAL.
FITTING	247042402	681	4	24	11 29 618 6	SUPERSTRUCTURE HYDR
FITTING	247042402	611	6	446	11 89 300 5	TUBING HYDR
FITTING	247042402	605	1	668	10 51 973 8	SELF-LOADING SYSTEM HYD
FITTING	247042402	607	1	702	10 51 728 1	TUBING HYDR
FITTING	247042502	746	2	26	11 29 618 6	SUPERSTRUCTURE HYDR
FITTING	247042702	607	1	22	11 29 618 6	SUPERSTRUCTURE HYDR
FITTING	247042702	605	2	513	10 51 826 1	PIVOT PIECE HYDR
FITTING	247043102	606	2	22	11 29 618 6	SUPERSTRUCTURE HYDR
FITTING	247043102	614	2	95	11 24 773 5	HYDR POWER UNIT
FITTING	247043102	23	2	212	11 24 114 4	FUEL SYSTEM
FITTING	247043202	615	2	85	10 51 969 5	A-FRAME ERECTION HYDR
FITTING	247043502	613	2	95	11 24 773 5	HYDR POWER UNIT
FITTING	247044302	652	2	95	11 24 773 5	HYDR POWER UNIT
FITTING	247048802	625	6	22	11 29 618 6	SUPERSTRUCTURE HYDR
FITTING	247048802	215	2	513	10 51 826 1	PIVOT PIECE HYDR
FITTING	247049002	618	1	22	11 29 618 6	SUPERSTRUCTURE HYDR
FITTING	247049002	33	2	217	11 24 114 5	ASSEMBLY INSTAL.
FITTING	247049002	22	1	446	11 89 300 5	TUBING HYDR
FITTING	247049102	627	2	22	11 29 618 6	SUPERSTRUCTURE HYDR
FITTING	247049102	617	1	95	11 24 773 5	HYDR POWER UNIT
FITTING	247049102	204	2	513	10 51 826 1	PIVOT PIECE HYDR
FITTING	247049202	631	1	22	11 29 618 6	SUPERSTRUCTURE HYDR
FITTING	247091002	302	1	94	11 24 773 5	HYDR POWER UNIT
FITTING	247105602	732	1	26	11 29 618 6	SUPERSTRUCTURE HYDR
FITTING	247108302	734	4	26	11 29 618 6	SUPERSTRUCTURE HYDR
FITTING	247108302	612	8	95	11 24 773 5	HYDR POWER UNIT
FITTING	247108302	24	4	212	11 24 114 4	FUEL SYSTEM
FITTING	247108302	641	1	448	11 89 300 5	TUBING HYDR
FITTING	247112702	624	9	22	11 29 618 6	SUPERSTRUCTURE HYDR
FITTING	247112702	202	2	85	10 51 969 5	A-FRAME ERECTION HYDR
FITTING	247112702	686	4	95	11 24 773 5	HYDR POWER UNIT
FITTING	247112702	603	2	385	10 55 216 1	TUBING HYDR
FITTING	247112702	201	2	513	10 51 826 1	PIVOT PIECE HYDR
FITTING	247112702	706	2	661	10 51 971 2	SELF-LOADING SYSTEM HYD
FITTING	247116402	605	3	22	11 29 618 6	SUPERSTRUCTURE HYDR
FITTING	247116402	607	3	513	10 51 826 1	PIVOT PIECE HYDR
FITTING	247117302	752	15	26	11 29 618 6	SUPERSTRUCTURE HYDR
FITTING	247117302	616	1	85	10 51 969 5	A-FRAME ERECTION HYDR
FITTING	247117302	628	1	95	11 24 773 5	HYDR POWER UNIT
FITTING	247117302	600	4	385	10 55 216 1	TUBING HYDR
FITTING	247117302	707	2	661	10 51 971 2	SELF-LOADING SYSTEM HYD
FITTING	247117302	203	1	668	10 51 973 8	SELF-LOADING SYSTEM HYD
FITTING	247117302	705	2	678	11 89 408 3	TUBING HYDR

Description	Item	Pos.	Quantity	Sheet	Assembly	Description
FITTING	247117702	704	9	26	11 29 618 6	SUPERSTRUCTURE HYDR
FITTING	247117702	308	1	95	11 24 773 5	HYDR POWER UNIT
FITTING	247117702	35	1	195	11 24 114 0	COOLER INSTALLATION WATE
FITTING	247117702	10	1	217	11 24 114 5	ASSEMBLY INSTAL.
FITTING	247117702	204	4	385	10 55 216 1	TUBING HYDR
FITTING	247117702	632	1	448	11 89 300 5	TUBING HYDR
FITTING	247121102	727	1	26	11 29 618 6	SUPERSTRUCTURE HYDR
FITTING	247126202	37	1	8	11 92 958 8	AIR DUCT CPL
FITTING	247126202	735	5	26	11 29 618 6	SUPERSTRUCTURE HYDR
FITTING	247126202	641	5	95	11 24 773 5	HYDR POWER UNIT
FITTING	247126202	35	2	217	11 24 114 5	ASSEMBLY INSTAL.
FITTING	247126202	610	3	446	11 89 300 5	TUBING HYDR
FITTING	247128402	626	8	22	11 29 618 6	SUPERSTRUCTURE HYDR
FITTING	247128402	627	6	95	11 24 773 5	HYDR POWER UNIT
FITTING	247128402	608	4	385	10 55 216 1	TUBING HYDR
FITTING	247128402	708	2	661	10 51 971 2	SELF-LOADING SYSTEM HYD
FITTING	247128402	701	1	715	10 56 173 5	TUBING HYDR
FITTING	247128502	731	2	26	11 29 618 6	SUPERSTRUCTURE HYDR
FITTING	247128502	604	1	345	10 51 969 8	NEEDLE LUFFING WINCH HYD
FITTING	247128502	605	4	446	11 89 300 5	TUBING HYDR
FITTING	247128502	614	1	620	10 51 726 2	TUBING HYDR
FITTING	247128602	653	4	24	11 29 618 6	SUPERSTRUCTURE HYDR
FITTING	247128602	625	1	95	11 24 773 5	HYDR POWER UNIT
FITTING	247128602	16	1	217	11 24 114 5	ASSEMBLY INSTAL.
FITTING	247128602	605	1	362	10 51 968 7	MAIN LUG HYDR
FITTING	247128602	602	1	385	10 55 216 1	TUBING HYDR
FITTING	247128602	648	2	448	11 89 300 5	TUBING HYDR
FITTING	247138602	729	3	26	11 29 618 6	SUPERSTRUCTURE HYDR
FITTING	247138602	692	1	96	11 24 773 5	HYDR POWER UNIT
FITTING	247138602	19	2	217	11 24 114 5	ASSEMBLY INSTAL.
FITTING	247138602	609	4	446	11 89 300 5	TUBING HYDR
FITTING	247142002	653	2	95	11 24 773 5	HYDR POWER UNIT
FITTING	247232702	660	2	24	11 29 618 6	SUPERSTRUCTURE HYDR
FITTING	247242302	629	11	22	11 29 618 6	SUPERSTRUCTURE HYDR
FITTING	247242302	317	1	95	11 24 773 5	HYDR POWER UNIT
FITTING	247242302	638	2	448	11 89 300 5	TUBING HYDR
FITTING	247261802	708	3	26	11 29 618 6	SUPERSTRUCTURE HYDR
FITTING	247261802	621	1	95	11 24 773 5	HYDR POWER UNIT
FITTING	470002414	700	1	506	91 90 239 14	CABLE HYDR
FITTING	470400701	11	1	356	93 36 755 01	OIL-GAUGING INSTRUMENT
FITTING	470400701	26	1	356	93 36 755 01	OIL-GAUGING INSTRUMENT
FITTING	470701414	691	1	96	11 24 773 5	HYDR POWER UNIT
FITTING	470702001	6	1	356	93 36 755 01	OIL-GAUGING INSTRUMENT
FITTING	470905214	36	1	195	11 24 114 0	COOLER INSTALLATION WATE
FITTING	470905714	37	3	195	11 24 114 0	COOLER INSTALLATION WATE
FITTING	471004514	602	11	22	11 29 618 6	SUPERSTRUCTURE HYDR
FITTING	471004514	605	1	85	10 51 969 5	A-FRAME ERECTION HYDR
FITTING	471004514	620	1	95	11 24 773 5	HYDR POWER UNIT
FITTING	471004514	617	6	448	11 89 300 5	TUBING HYDR
FITTING	471004514	703	2	661	10 51 971 2	SELF-LOADING SYSTEM HYD
FITTING	471004514	611	1	668	10 51 973 8	SELF-LOADING SYSTEM HYD
FITTING	471004514	605	2	702	10 51 728 1	TUBING HYDR
FITTING	471004614	619	2	95	11 24 773 5	HYDR POWER UNIT
FITTING	471004614	603	2	345	10 51 969 8	NEEDLE LUFFING WINCH HYD
FITTING	471004614	607	2	362	10 51 968 7	MAIN LUG HYDR
FITTING	471004614	618	2	448	11 89 300 5	TUBING HYDR
FITTING	471004614	708	1	486	11 26 260 6	WINCH 1 HYDR
FITTING	471004614	708	1	501	11 26 261 1	WINCH 2 HYDR
FITTING	471007014	706	4	26	11 29 618 6	SUPERSTRUCTURE HYDR
FITTING	471007014	619	1	385	10 55 216 1	TUBING HYDR

Description	Item	Pos.	Quantity	Sheet	Assembly	Description
FITTING	471007914	315	1	95	11 24 773 5	HYDR POWER UNIT
FITTING	471008014	677	3	95	11 24 773 5	HYDR POWER UNIT
FITTING	471008214	601	3	22	11 29 618 6	SUPERSTRUCTURE HYDR
FITTING	471008214	611	8	95	11 24 773 5	HYDR POWER UNIT
FITTING	471008214	612	8	446	11 89 300 5	TUBING HYDR
FITTING	471008214	709	1	486	11 26 260 6	WINCH 1 HYDR
FITTING	471008214	709	1	501	11 26 261 1	WINCH 2 HYDR
FITTING	471016401	590	2	98	11 24 682 0	DISTRIBUTOR GEARBOX
FITTING	471030208	704	1	715	10 56 173 5	TUBING HYDR
FITTING	471030508	600	3	22	11 29 618 6	SUPERSTRUCTURE HYDR
FITTING	471030508	678	1	95	11 24 773 5	HYDR POWER UNIT
FITTING	471030708	737	1	26	11 29 618 6	SUPERSTRUCTURE HYDR
FITTING	471030708	710	1	486	11 26 260 6	WINCH 1 HYDR
FITTING	471030708	710	1	501	11 26 261 1	WINCH 2 HYDR
FITTING	471031108	33	2	8	11 92 958 8	AIR DUCT CPL
FITTING	471031108	672	1	95	11 24 773 5	HYDR POWER UNIT
FITTING	471031108	654	1	448	11 89 300 5	TUBING HYDR
FITTING	471031308	34	1	8	11 92 958 8	AIR DUCT CPL
FITTING	471031308	632	2	95	11 24 773 5	HYDR POWER UNIT
FITTING	471031308	616	2	448	11 89 300 5	TUBING HYDR
FITTING	471031508	631	3	95	11 24 773 5	HYDR POWER UNIT
FITTING	471031508	31	2	217	11 24 114 5	ASSEMBLY INSTAL.
FITTING	471031808	680	2	95	11 24 773 5	HYDR POWER UNIT
FITTING	471032108	610	2	668	10 51 973 8	SELF-LOADING SYSTEM HYD
FITTING	471032608	622	1	22	11 29 618 6	SUPERSTRUCTURE HYDR
FITTING	471032608	604	2	85	10 51 969 5	A-FRAME ERECTION HYDR
FITTING	471032608	615	6	446	11 89 300 5	TUBING HYDR
FITTING	471032608	606	2	528	10 51 959 1	TUBING HYDR
FITTING	471032608	700	8	684	11 23 524 8	TUBING HYDR
FITTING	471032608	600	1	690	10 55 459 4	TUBING HYDR
FITTING	471032708	658	4	24	11 29 618 6	SUPERSTRUCTURE HYDR
FITTING	471032708	603	2	85	10 51 969 5	A-FRAME ERECTION HYDR
FITTING	471032708	600	24	446	11 89 300 5	TUBING HYDR
FITTING	471032708	627	2	528	10 51 959 1	TUBING HYDR
FITTING	471032708	704	2	661	10 51 971 2	SELF-LOADING SYSTEM HYD
FITTING	471032708	703	8	678	11 89 408 3	TUBING HYDR
FITTING	471032708	609	1	702	10 51 728 1	TUBING HYDR
FITTING	471032808	621	27	22	11 29 618 6	SUPERSTRUCTURE HYDR
FITTING	471032808	630	3	95	11 24 773 5	HYDR POWER UNIT
FITTING	471032808	602	3	345	10 51 969 8	NEEDLE LUFFING WINCH HYD
FITTING	471032808	609	3	362	10 51 968 7	MAIN LUG HYDR
FITTING	471032808	622	2	448	11 89 300 5	TUBING HYDR
FITTING	471032808	701	1	506	91 90 239 14	CABLE HYDR
FITTING	471032808	600	1	702	10 51 728 1	TUBING HYDR
FITTING	471032808	705	3	715	10 56 173 5	TUBING HYDR
FITTING	471032908	616	1	22	11 29 618 6	SUPERSTRUCTURE HYDR
FITTING	471033014	629	1	95	11 24 773 5	HYDR POWER UNIT
FITTING	471033014	601	1	345	10 51 969 8	NEEDLE LUFFING WINCH HYD
FITTING	471033014	651	2	448	11 89 300 5	TUBING HYDR
FITTING	471033014	602	2	620	10 51 726 2	TUBING HYDR
FITTING	471033114	707	1	26	11 29 618 6	SUPERSTRUCTURE HYDR
FITTING	471033214	722	2	26	11 29 618 6	SUPERSTRUCTURE HYDR
FITTING	471033214	636	1	448	11 89 300 5	TUBING HYDR
FITTING	471033214	608	3	513	10 51 826 1	PIVOT PIECE HYDR
FITTING	471033214	605	3	528	10 51 959 1	TUBING HYDR
FITTING	471033214	603	2	620	10 51 726 2	TUBING HYDR
FITTING	471033214	709	2	661	10 51 971 2	SELF-LOADING SYSTEM HYD
FITTING	471033214	704	1	678	11 89 408 3	TUBING HYDR
FITTING	471033314	606	1	362	10 51 968 7	MAIN LUG HYDR
FITTING	471033414	725	1	26	11 29 618 6	SUPERSTRUCTURE HYDR

Description	Item	Pos.	Quantity	Sheet	Assembly	Description
FITTING	471033614	738	1	26	11 29 618 6	SUPERSTRUCTURE HYDR
FITTING	471034414	726	2	26	11 29 618 6	SUPERSTRUCTURE HYDR
FITTING	471034414	612	2	385	10 55 216 1	TUBING HYDR
FITTING	471034414	604	2	513	10 51 826 1	PIVOT PIECE HYDR
FITTING	471034708	672	4	24	11 29 618 6	SUPERSTRUCTURE HYDR
FITTING	471034708	637	1	95	11 24 773 5	HYDR POWER UNIT
FITTING	471034714	25	2	212	11 24 114 4	FUEL SYSTEM
FITTING	471034714	607	1	345	10 51 969 8	NEEDLE LUFFING WINCH HYD
FITTING	471036014	652	2	448	11 89 300 5	TUBING HYDR
FITTING	471039408	612	1	362	10 51 968 7	MAIN LUG HYDR
FITTING	471039408	611	2	385	10 55 216 1	TUBING HYDR
FITTING	471039708	618	2	385	10 55 216 1	TUBING HYDR
FITTING	471039708	600	1	620	10 51 726 2	TUBING HYDR
FITTING	471039908	42	1	8	11 92 958 8	AIR DUCT CPL
FITTING	471039908	635	3	95	11 24 773 5	HYDR POWER UNIT
FITTING	471039908	655	2	448	11 89 300 5	TUBING HYDR
FITTING	471100114	617	3	22	11 29 618 6	SUPERSTRUCTURE HYDR
FITTING	471100114	604	2	528	10 51 959 1	TUBING HYDR
FITTING	471100414	608	2	22	11 29 618 6	SUPERSTRUCTURE HYDR
FITTING	471100614	620	2	448	11 89 300 5	TUBING HYDR
FITTING	471100714	756	1	26	11 29 618 6	SUPERSTRUCTURE HYDR
FITTING	471100714	603	1	528	10 51 959 1	TUBING HYDR
FITTING	472001401	4	1	356	93 36 755 01	OIL-GAUGING INSTRUMENT
FITTING	472531508	723	1	26	11 29 618 6	SUPERSTRUCTURE HYDR
FITTING	472531508	624	2	528	10 51 959 1	TUBING HYDR
FITTING	472531508	608	3	668	10 51 973 8	SELF-LOADING SYSTEM HYD
FITTING	472531508	703	1	715	10 56 173 5	TUBING HYDR
FITTING	473201101	3	1	356	93 36 755 01	OIL-GAUGING INSTRUMENT
FITTING	473201101	22	1	356	93 36 755 01	OIL-GAUGING INSTRUMENT
FITTING	473210214	632	1	528	10 51 959 1	TUBING HYDR
FITTING	473210214	607	3	668	10 51 973 8	SELF-LOADING SYSTEM HYD
FITTING	473210214	700	1	678	11 89 408 3	TUBING HYDR
FITTING	473231214	633	1	528	10 51 959 1	TUBING HYDR
FITTING	474001214	760	1	26	11 29 618 6	SUPERSTRUCTURE HYDR
FITTING	474002314	620	4	22	11 29 618 6	SUPERSTRUCTURE HYDR
FITTING	474002414	744	2	26	11 29 618 6	SUPERSTRUCTURE HYDR
FITTING	474002414	614	4	446	11 89 300 5	TUBING HYDR
FITTING	474032614	628	3	22	11 29 618 6	SUPERSTRUCTURE HYDR
FITTING	474032614	602	4	513	10 51 826 1	PIVOT PIECE HYDR
FITTING	474032614	600	8	528	10 51 959 1	TUBING HYDR
FITTING	474032714	650	2	24	11 29 618 6	SUPERSTRUCTURE HYDR
FITTING	474032914	636	2	22	11 29 618 6	SUPERSTRUCTURE HYDR
FITTING	474033014	719	4	26	11 29 618 6	SUPERSTRUCTURE HYDR
FITTING	474033014	647	8	448	11 89 300 5	TUBING HYDR
FITTING	474033014	714	2	486	11 26 260 6	WINCH 1 HYDR
FITTING	474033014	714	2	501	11 26 261 1	WINCH 2 HYDR
FITTING	474033014	601	4	513	10 51 826 1	PIVOT PIECE HYDR
FITTING	475002514	628	2	528	10 51 959 1	TUBING HYDR
FITTING	475033014	609	3	668	10 51 973 8	SELF-LOADING SYSTEM HYD
FITTING	475033614	619	1	528	10 51 959 1	TUBING HYDR
FITTING	475501414	635	2	22	11 29 618 6	SUPERSTRUCTURE HYDR
FITTING	475501414	604	4	446	11 89 300 5	TUBING HYDR
FITTING	475501914	685	1	95	11 24 773 5	HYDR POWER UNIT
FITTING	475501914	606	1	668	10 51 973 8	SELF-LOADING SYSTEM HYD
FITTING	475502514	625	4	448	11 89 300 5	TUBING HYDR
FITTING	475503314	212	2	513	10 51 826 1	PIVOT PIECE HYDR
FITTING	476608008	39	1	195	11 24 114 0	COOLER INSTALLATION WATE
FITTING	477102814	57	2	217	11 24 114 5	ASSEMBLY INSTAL.
FITTING	477400314	690	2	96	11 24 773 5	HYDR POWER UNIT
FITTING	477400314	702	1	506	91 90 239 14	CABLE HYDR

Description	Item	Pos.	Quantity	Sheet	Assembly	Description
FITTING	477400414	673	1	528	10 51 959 1	TUBING HYDR
FITTING	477400414	605	8	684	11 23 524 8	TUBING HYDR
FITTING	477400614	208	2	513	10 51 826 1	PIVOT PIECE HYDR
FITTING	477400714	633	2	22	11 29 618 6	SUPERSTRUCTURE HYDR
FITTING	477400814	624	4	385	10 55 216 1	TUBING HYDR
FITTING	477401014	202	4	513	10 51 826 1	PIVOT PIECE HYDR
FITTING	477401814	46	1	20	11 29 618 6	SUPERSTRUCTURE HYDR
FITTING	477430614	41	2	8	11 92 958 8	AIR DUCT CPL
FITTING	477700114	639	2	22	11 29 618 6	SUPERSTRUCTURE HYDR
FITTING	477700114	655	1	95	11 24 773 5	HYDR POWER UNIT
FITTING	477700114	214	2	513	10 51 826 1	PIVOT PIECE HYDR
FITTING	477700214	619	1	22	11 29 618 6	SUPERSTRUCTURE HYDR
FITTING	477700214	23	1	446	11 89 300 5	TUBING HYDR
FITTING	477700414	689	2	96	11 24 773 5	HYDR POWER UNIT
FITTING	477700414	703	1	506	91 90 239 14	CABLE HYDR
FITTING	477700514	638	6	22	11 29 618 6	SUPERSTRUCTURE HYDR
FITTING	477700514	213	2	513	10 51 826 1	PIVOT PIECE HYDR
FITTING	477700514	202	1	528	10 51 959 1	TUBING HYDR
FITTING	477700514	606	8	684	11 23 524 8	TUBING HYDR
FITTING	477700714	47	1	20	11 29 618 6	SUPERSTRUCTURE HYDR
FITTING	477700814	634	1	22	11 29 618 6	SUPERSTRUCTURE HYDR
FITTING	477701114	207	2	513	10 51 826 1	PIVOT PIECE HYDR
FITTING	477701414	632	2	22	11 29 618 6	SUPERSTRUCTURE HYDR
FITTING	477701514	625	4	385	10 55 216 1	TUBING HYDR
FITTING	477701814	211	4	513	10 51 826 1	PIVOT PIECE HYDR
FITTING	477704514	40	1	8	11 92 958 8	AIR DUCT CPL
FITTING	477704514	78	1	396	90 01 376 2	SLEWING GEAR DRIVE
FITTING	477704514	650	1	448	11 89 300 5	TUBING HYDR
FITTING	477704614	720	3	26	11 29 618 6	SUPERSTRUCTURE HYDR
FITTING	477704614	19	1	60	10 56 070 1	TANK HYDR CPL
FITTING	477704614	17	5	65	10 56 073 3	FUEL TANK CPL
FITTING	477704614	300	1	94	11 24 773 5	HYDR POWER UNIT
FITTING	477704914	35	2	5	11 93 045 7	MODIFICATION KIT RFK
FITTING	477704914	306	1	95	11 24 773 5	HYDR POWER UNIT
FITTING	477704914	32	1	191	10 57 532 2	INTAKE PIPE OIL CPL
FITTING	477704914	38	4	195	11 24 114 0	COOLER INSTALLATION WATE
FITTING	477704914	64	2	207	11 24 114 2	SUCTION UNIT AIR
FITTING	477705114	202	1	362	10 51 968 7	MAIN LUG HYDR
FITTING	477705214	58	1	217	11 24 114 5	ASSEMBLY INSTAL.
FITTING	481930314	612	1	668	10 51 973 8	SELF-LOADING SYSTEM HYD
FITTING	481930414	630	3	22	11 29 618 6	SUPERSTRUCTURE HYDR
FITTING	481930414	624	2	448	11 89 300 5	TUBING HYDR
FITTING	481930414	704	1	506	91 90 239 14	CABLE HYDR
FITTING	481930514	703	1	486	11 26 260 6	WINCH 1 HYDR
FITTING	481930514	703	1	501	11 26 261 1	WINCH 2 HYDR
FITTING	481930614	622	1	528	10 51 959 1	TUBING HYDR
FITTING	481930714	604	1	668	10 51 973 8	SELF-LOADING SYSTEM HYD
FITTING	481931114	761	1	26	11 29 618 6	SUPERSTRUCTURE HYDR
FITTING	481931614	687	1	96	11 24 773 5	HYDR POWER UNIT
FITTING	481933014	623	4	448	11 89 300 5	TUBING HYDR
FITTING	481933614	319	1	95	11 24 773 5	HYDR POWER UNIT
FITTING	482330814	730	2	26	11 29 618 6	SUPERSTRUCTURE HYDR
FITTING	482330814	675	1	95	11 24 773 5	HYDR POWER UNIT
FITTING	482331114	603	3	668	10 51 973 8	SELF-LOADING SYSTEM HYD
FITTING	482331914	721	3	26	11 29 618 6	SUPERSTRUCTURE HYDR
FITTING	482331914	600	2	513	10 51 826 1	PIVOT PIECE HYDR
FITTING	482430314	693	1	24	11 29 618 6	SUPERSTRUCTURE HYDR
FITTING	482430314	201	1	385	10 55 216 1	TUBING HYDR
FITTING	482430614	606	2	446	11 89 300 5	TUBING HYDR
FITTING	482431214	602	1	668	10 51 973 8	SELF-LOADING SYSTEM HYD

Description	Item	Pos.	Quantity	Sheet	Assembly	Description
FITTING	482431314	204	1	22	11 29 618 6	SUPERSTRUCTURE HYDR
FITTING	482431314	643	2	95	11 24 773 5	HYDR POWER UNIT
FITTING	482431314	705	1	486	11 26 260 6	WINCH 1 HYDR
FITTING	482431314	705	1	501	11 26 261 1	WINCH 2 HYDR
FITTING	482431414	706	1	486	11 26 260 6	WINCH 1 HYDR
FITTING	482431414	706	1	501	11 26 261 1	WINCH 2 HYDR
FITTING	482431514	671	1	528	10 51 959 1	TUBING HYDR
FITTING	482431714	623	4	385	10 55 216 1	TUBING HYDR
FITTING	482530814	755	2	26	11 29 618 6	SUPERSTRUCTURE HYDR
FITTING	482530814	660	1	95	11 24 773 5	HYDR POWER UNIT
FITTING	482530914	736	1	26	11 29 618 6	SUPERSTRUCTURE HYDR
FITTING	482530914	301	2	94	11 24 773 5	HYDR POWER UNIT
FITTING	482531614	615	1	22	11 29 618 6	SUPERSTRUCTURE HYDR
FITTING	482531814	652	2	24	11 29 618 6	SUPERSTRUCTURE HYDR
FITTING	482531814	649	4	448	11 89 300 5	TUBING HYDR
FITTING	485430714	748	1	26	11 29 618 6	SUPERSTRUCTURE HYDR
FITTING	485431214	714	2	26	11 29 618 6	SUPERSTRUCTURE HYDR
FITTING	485431214	683	3	95	11 24 773 5	HYDR POWER UNIT
FITTING	485431314	666	4	24	11 29 618 6	SUPERSTRUCTURE HYDR
FITTING	485431414	205	1	22	11 29 618 6	SUPERSTRUCTURE HYDR
FITTING	485432814	759	1	26	11 29 618 6	SUPERSTRUCTURE HYDR
FITTING	485433314	684	1	95	11 24 773 5	HYDR POWER UNIT
FITTING	485433314	713	2	486	11 26 260 6	WINCH 1 HYDR
FITTING	485433314	713	2	501	11 26 261 1	WINCH 2 HYDR
FITTING	485433314	613	8	528	10 51 959 1	TUBING HYDR
FITTING	485433314	615	2	620	10 51 726 2	TUBING HYDR
FITTING	485433314	710	2	661	10 51 971 2	SELF-LOADING SYSTEM HYD
FITTING	485433414	758	1	26	11 29 618 6	SUPERSTRUCTURE HYDR
FITTING	485433414	705	1	506	91 90 239 14	CABLE HYDR
FITTING	485433414	629	2	528	10 51 959 1	TUBING HYDR
FITTING	485433514	610	1	85	10 51 969 5	A-FRAME ERECTION HYDR
FITTING	485433514	630	1	528	10 51 959 1	TUBING HYDR
FITTING	485434214	747	1	26	11 29 618 6	SUPERSTRUCTURE HYDR
FITTING	485435014	651	2	24	11 29 618 6	SUPERSTRUCTURE HYDR
FITTING	485435714	713	1	26	11 29 618 6	SUPERSTRUCTURE HYDR
FITTING	485436414	629	2	448	11 89 300 5	TUBING HYDR
FITTING	485436414	617	1	620	10 51 726 2	TUBING HYDR
FITTING	485437514	313	1	95	11 24 773 5	HYDR POWER UNIT
FITTING	491033414	601	1	668	10 51 973 8	SELF-LOADING SYSTEM HYD
FITTING	491101214	757	1	26	11 29 618 6	SUPERSTRUCTURE HYDR
FITTING	4981232	1	2	272	10 14 179 0	CONNECTING PIECE PRE-ASS
FITTING	4981235	3	1	237	10 14 591 9	OIL DIPSTICK WITH PIPE
FITTING	4981235	10	1	292	10 14 013 6	EXHAUST TC MOUNTING
FITTING	510701214	745	1	26	11 29 618 6	SUPERSTRUCTURE HYDR
FITTING	510701314	677	2	24	11 29 618 6	SUPERSTRUCTURE HYDR
FITTING	510701914	711	2	26	11 29 618 6	SUPERSTRUCTURE HYDR
FITTING	510702014	742	1	26	11 29 618 6	SUPERSTRUCTURE HYDR
FITTING	510702414	712	1	26	11 29 618 6	SUPERSTRUCTURE HYDR
FITTING	510702414	702	1	486	11 26 260 6	WINCH 1 HYDR
FITTING	510703914	740	1	26	11 29 618 6	SUPERSTRUCTURE HYDR
FITTING	510704614	664	1	24	11 29 618 6	SUPERSTRUCTURE HYDR
FITTING	510709114	600	1	668	10 51 973 8	SELF-LOADING SYSTEM HYD
FITTING	510709214	679	1	95	11 24 773 5	HYDR POWER UNIT
FITTING	592286514	36	1	419	10 35 008 0	CABIN
FITTING	592286514	11	5	423	10 35 007 6	SLIDING DOOR
FITTING	7021521	19	1	292	10 14 013 6	EXHAUST TC MOUNTING
FITTING	7027665	10	1	239	10 14 671 6	OIL LINE PRE-ASSEMBLY
FITTING	7362091	603	12	22	11 29 618 6	SUPERSTRUCTURE HYDR
FITTING	7362091	614	1	85	10 51 969 5	A-FRAME ERECTION HYDR
FITTING	7362091	314	1	95	11 24 773 5	HYDR POWER UNIT

Description	Item	Pos.	Quantity	Sheet	Assembly	Description
FITTING	7362091	637	2	448	11 89 300 5	TUBING HYDR
FITTING	7365616	653	2	448	11 89 300 5	TUBING HYDR
FITTING	7367776	613	12	22	11 29 618 6	SUPERSTRUCTURE HYDR
FITTING	7367776	603	4	95	11 24 773 5	HYDR POWER UNIT
FITTING	7367776	610	1	345	10 51 969 8	NEEDLE LUFFING WINCH HYD
FITTING	7367776	611	1	362	10 51 968 7	MAIN LUG HYDR
FITTING	7367776	621	4	448	11 89 300 5	TUBING HYDR
FITTING	7367776	704	1	486	11 26 260 6	WINCH 1 HYDR
FITTING	7367776	704	1	501	11 26 261 1	WINCH 2 HYDR
FITTING	7367776	614	1	528	10 51 959 1	TUBING HYDR
FITTING	7367776	702	1	715	10 56 173 5	TUBING HYDR
FITTING	7367986	670	3	24	11 29 618 6	SUPERSTRUCTURE HYDR
FITTING	7403569	202	3	385	10 55 216 1	TUBING HYDR
FITTING	7407098	608	8	528	10 51 959 1	TUBING HYDR
FITTING	7407098	616	2	620	10 51 726 2	TUBING HYDR
FITTING	7407108	305	1	95	11 24 773 5	HYDR POWER UNIT
FITTING	7407108	603	1	362	10 51 968 7	MAIN LUG HYDR
FITTING	7407108	707	1	486	11 26 260 6	WINCH 1 HYDR
FITTING	7407108	707	1	501	11 26 261 1	WINCH 2 HYDR
FITTING	7410455	640	2	24	11 29 618 6	SUPERSTRUCTURE HYDR
FITTING	7410455	643	8	448	11 89 300 5	TUBING HYDR
FITTING	7617268	703	13	26	11 29 618 6	SUPERSTRUCTURE HYDR
FITTING	7617268	612	1	85	10 51 969 5	A-FRAME ERECTION HYDR
FITTING	7617268	676	3	95	11 24 773 5	HYDR POWER UNIT
FITTING	7617268	613	1	362	10 51 968 7	MAIN LUG HYDR
FITTING	7617268	628	6	448	11 89 300 5	TUBING HYDR
FITTING	7617268	602	3	702	10 51 728 1	TUBING HYDR
FITTING	7617354	611	1	85	10 51 969 5	A-FRAME ERECTION HYDR
FITTING	7617354	634	11	448	11 89 300 5	TUBING HYDR
FITTING	7617354	611	7	528	10 51 959 1	TUBING HYDR
FITTING	7617354	702	4	661	10 51 971 2	SELF-LOADING SYSTEM HYD
FITTING	7617354	601	1	690	10 55 459 4	TUBING HYDR
FITTING	7617354	608	1	702	10 51 728 1	TUBING HYDR
FITTING	7617460	705	1	26	11 29 618 6	SUPERSTRUCTURE HYDR
FITTING	7617460	613	1	85	10 51 969 5	A-FRAME ERECTION HYDR
FITTING	7617460	635	2	448	11 89 300 5	TUBING HYDR
FITTING	7617460	626	2	528	10 51 959 1	TUBING HYDR
FITTING	7617461	673	3	24	11 29 618 6	SUPERSTRUCTURE HYDR
FITTING	7617461	600	1	85	10 51 969 5	A-FRAME ERECTION HYDR
FITTING	7617461	633	3	448	11 89 300 5	TUBING HYDR
FITTING	7617461	623	2	528	10 51 959 1	TUBING HYDR
FITTING	7617461	700	2	661	10 51 971 2	SELF-LOADING SYSTEM HYD
FITTING	7617494	678	2	24	11 29 618 6	SUPERSTRUCTURE HYDR
FITTING	7617494	303	1	95	11 24 773 5	HYDR POWER UNIT
FITTING	7621827	36	1	8	11 92 958 8	AIR DUCT CPL
FITTING	7622060	712	2	486	11 26 260 6	WINCH 1 HYDR
FITTING	7622060	712	2	501	11 26 261 1	WINCH 2 HYDR
FITTING	790259414	612	1	620	10 51 726 2	TUBING HYDR
FITTING	790453814	614	1	22	11 29 618 6	SUPERSTRUCTURE HYDR
FITTING	790453814	648	3	95	11 24 773 5	HYDR POWER UNIT
FITTING KEY DIN 6885 B28X1	571827308	400	8	98	11 24 682 0	DISTRIBUTOR GEARBOX
FITTING KEY DIN 6885 B32X18	485529814	410	2	98	11 24 682 0	DISTRIBUTOR GEARBOX
FITTING KEY DIN 6885 B8X7X1	10567120	450	1	98	11 24 682 0	DISTRIBUTOR GEARBOX
FITTINGS	10334218	11	1	294	10 14 622 4	REGULATION BOOST PRESS
FITTINGS	9273271	2	2	257	10 14 294 2	LUBE OIL FILTER ASSEMBLY
FITTINGS	956385814	45	2	217	11 24 114 5	ASSEMBLY INSTAL.
FIXING BAND	501507214	14	1	626	54 02 702 14	ROPE DRUM CPL
FIXING CLAMP	11283913	18	8	552	11 28 390 8	BOOM ACCESS
FIXING CLAMP	11283913	18	9	568	11 28 583 8	BOOM ACCESS
FIXING CLAMP	11283913	18	9	575	11 28 626 1	BOOM ACCESS

Description	Item	Pos.	Quantity	Sheet	Assembly	Description
FIXING CLAMP	11283913	17	12	578	11 24 132 4	BOOM HEAD CPL
FIXING CLAMP	11283913	13	4	650	11 29 473 7	GANGWAY INTERM. SECTION
FIXING CLAMP	11283913	14	10	654	11 29 474 2	GANGWAY INTERM. SECTION
FIXING CLAMP	11283913	16	14	655	11 29 474 3	GANGWAY INTERM. SECTION
FIXING PARTS	10289973	41	1	434	10 22 506 8	OPERATOR SEAT
FLANGE	10583864	1	1	365	10 55 156 3	WINCH
FLANGE	540271814	1	1	627	54 02 703 14	FLANGE CPL
FLANGE	552066514	22	2	60	10 56 070 1	TANK HYDR CPL
FLANGE	9072435	12	1	127	90 77 464	RS FLANGE
FLANGE	944137814	24	1	94	11 24 773 5	HYDR POWER UNIT
FLANGE	944813514	25	1	94	11 24 773 5	HYDR POWER UNIT
FLANGE	956274314	28	4	20	11 29 618 6	SUPERSTRUCTURE HYDR
FLANGE	959712714	21	1	711	10 52 293 0	SG TACHOGENERATOR RFK
FLANGE BEARING	11231270	3	1	489	10 53 039 8	WINCH
FLANGE COVER	11215698	2	1	175	10 22 601 3	V PUMP
FLANGE COVER	11215699	3	1	175	10 22 601 3	V PUMP
FLANGE CPL	540270314	22	1	624	59 20 694 14	WINCH
FLANGE HALF	510548714	105	8	22	11 29 618 6	SUPERSTRUCTURE HYDR
FLANGE HALF	510574414	100	8	22	11 29 618 6	SUPERSTRUCTURE HYDR
FLANGE HALF	510574414	21	2	191	10 57 532 2	INTAKE PIPE OIL CPL
FLANGE HALF	510586614	103	12	22	11 29 618 6	SUPERSTRUCTURE HYDR
FLANGE HALF	510586614	617	4	362	10 51 968 7	MAIN LUG HYDR
FLANGE HALF	510586614	646	16	448	11 89 300 5	TUBING HYDR
FLANGE HALF	510586614	730	8	486	11 26 260 6	WINCH 1 HYDR
FLANGE HALF	510586614	730	8	501	11 26 261 1	WINCH 2 HYDR
FLANGE HALF	510586914	104	18	22	11 29 618 6	SUPERSTRUCTURE HYDR
FLANGE HALF	510586914	620	4	345	10 51 969 8	NEEDLE LUFFING WINCH HYD
FLANGE HALF	510586914	630	4	385	10 55 216 1	TUBING HYDR
FLANGE HALF	510587514	101	8	22	11 29 618 6	SUPERSTRUCTURE HYDR
FLANGE HALF	510587514	312	2	95	11 24 773 5	HYDR POWER UNIT
FLANGE HALF	510587514	631	8	385	10 55 216 1	TUBING HYDR
FLANGE HALF	510587514	650	2	528	10 51 959 1	TUBING HYDR
FLANGE HALF	510587514	614	2	668	10 51 973 8	SELF-LOADING SYSTEM HYD
FLANGE HALF	511502414	102	24	22	11 29 618 6	SUPERSTRUCTURE HYDR
FLANGE HALF	511502414	310	6	95	11 24 773 5	HYDR POWER UNIT
FLANGE HALF	511502414	20	6	191	10 57 532 2	INTAKE PIPE OIL CPL
FLANGE HALF	511598114	22	2	191	10 57 532 2	INTAKE PIPE OIL CPL
FLANGED BOLT M33X220 10.9	11266734	12	76	69	10 51 963 1	SUPERSTR. SLEWING RING IN
FLANGED BOLT M33X245 10.9	10512966	10	80	441	10 51 969 6	CONNECTION SUPERSTR UC
FLANGED BOLT MO90X4108X5	10522847	2	1	599	79 03 862 14	LOAD HOOK
FLAP	11909480	100	1	432	11 93 934 6	AIR CONDITIONING
FLAP CPL	592289514	57	1	419	10 35 008 0	CABIN
FLASHING LIGHT	10524928	90	1	404	11 27 973 6	CABIN EL
FLASHING LIGHT	10524928	35	2	539	10 53 120 7	A-FRAME ELECTRICS
FLAT CAGE BEARING	501532014	9	1	626	54 02 702 14	ROPE DRUM CPL
FLAT COPPER EL	10530486	6	1	47	10 53 048 9	FUSE HOLDER
FLAT FUSE LINK	604105314	68	5	406	10 55 963 5	SWITCH CABINET X1
FLAT FUSE LINK	604105314	5	5	407	99 20 811 14	RESERVE FUSES
FLAT FUSE LINK	604105414	7	5	407	99 20 811 14	RESERVE FUSES
FLAT FUSE LINK	604105514	69	41	406	10 55 963 5	SWITCH CABINET X1
FLAT FUSE LINK	604105514	10	10	407	99 20 811 14	RESERVE FUSES
FLAT FUSE LINK	604105614	70	6	406	10 55 963 5	SWITCH CABINET X1
FLAT FUSE LINK	604105614	15	5	407	99 20 811 14	RESERVE FUSES
FLAT GASKET	9276860	37	2	115	10 11 834 9	DOUBLE V-PUMP
FLAT GASKET	9276860	37	2	138	92 76 408	SEAL KIT DOUBLE PUMP
FLAT PLUG	602203914	55	6	403	11 27 973 6	CABIN EL
FLAT PLUG	602203914	92	6	404	11 27 973 6	CABIN EL
FLAT PLUG	602203914	71	2	725	10 52 155 9	MODULE REFUELLING SYSTE
FLAT PLUG HOUSING	602208714	92	1	406	10 55 963 5	SWITCH CABINET X1
FLAT PLUG HOUSING	602209014	91	1	404	11 27 973 6	CABIN EL

Description	Item	Pos.	Quantity	Sheet	Assembly	Description
FLAT PLUG HOUSING	602305914	54	3	403	11 27 973 6	CABIN EL
FLAT PLUG HOUSING	602305914	70	1	725	10 52 155 9	MODULE REFUELLING SYSTE
FLAT SEALING RING	10588725	4	1	530	59 20 224 14	LOAD HOLDING VALVE
FLEXIBLE EDGE PROTECTOR	10352462	17	0.422	552	11 28 390 8	BOOM ACCESS
FLEXIBLE EDGE PROTECTOR	10352462	17	0.422	568	11 28 583 8	BOOM ACCESS
FLEXIBLE EDGE PROTECTOR	10352462	17	0.422	575	11 28 626 1	BOOM ACCESS
FLEXIBLE EDGE PROTECTOR	10352462	15	0.22	659	11 26 901 8	HOLDER CPL
FLEXIBLE EDGE PROTECTOR	262103101	16	0.16	546	10 35 063 3	FASTENER
FLEXIBLE EDGE PROTECTOR	262105314	14	9	319	11 24 409 1	COVERS
FLEXIBLE EDGE PROTECTOR	262105314	2	1.1	321	10 57 883 5	DOOR
FLOOR	11289833	25	1	685	59 21 826 14	SUPPORT CYLINDER
FLOOR MAT	592286914	25	1	419	10 35 008 0	CABIN
FLOOR PLATE	388291208	16	72	467	11 89 365 0	CRAWLER CARRIER RIGHT CP
FLOOR PLATE	388291208	16	72	478	11 89 365 1	CRAWLER CARRIER LEFT CP
FLOW REGULATING CHECK	11233730	4	1	87	10 22 540 8	VALVE BLOCK
FLOW REGULATING CHECK	7623541	204	1	30	11 28 647 6	VALVE BLOCK
FLUE GAS PIPE CPL	11248166	6	1	211	11 24 114 3	EXHAUST GAS SYSTEM
FLYWHEEL ASSEMBLY	10118929	530	1	225	12 42 545 4	DIESEL ENGINE
FLYWHEEL HOUSING MOUNT	10115577	520	1	224	12 42 545 4	DIESEL ENGINE
FLYWHEEL HOUSING PRE-A	10115576	1	1	299	10 11 557 7	FLYWHEEL HOUSING MOUNT
FLYWHEEL PRE-ASS.	10118928	1	1	303	10 11 892 9	FLYWHEEL ASSEMBLY
FOLDING BRACKET	10564433	10	4	681	11 89 568 6	SELF-LOADING SYSTEM RFK
FOOT PEDAL	11219883	1	1	704	11 22 037 2	FOOT PEDAL EL INSTALLATIO
FOOT PEDAL	11223717	210	2	404	11 27 973 6	CABIN EL
FOOT PEDAL EL INSTALLATIO	11220372	723	1	4	01 38 376 14	LR 1300 SX
FOOT PEDAL EL INSTALLATIO	11223691	211	1	404	11 27 973 6	CABIN EL
FOOT ST.CONST.	990954814	31	2	510	11 23 820 3	PIVOT PIECE CPL
FOOT STRIP	10585909	20	1	631	10 55 372 1	ROOF RAILING RFK
FOOT STRIP	10585910	21	1	631	10 55 372 1	ROOF RAILING RFK
FOOT STRIP	10585911	22	1	631	10 55 372 1	ROOF RAILING RFK
FOOT STRIP	10585912	23	1	631	10 55 372 1	ROOF RAILING RFK
FOOT STRIP	10585913	24	2	631	10 55 372 1	ROOF RAILING RFK
FOOT STRIP	10585914	25	1	631	10 55 372 1	ROOF RAILING RFK
FOOT STRIP	10585915	26	1	631	10 55 372 1	ROOF RAILING RFK
FOOT STRIP	10585916	27	1	631	10 55 372 1	ROOF RAILING RFK
FOOT STRIP	10585917	28	1	631	10 55 372 1	ROOF RAILING RFK
FOOT STRIP	10585919	30	1	631	10 55 372 1	ROOF RAILING RFK
FOOT STRIP	10585920	31	1	631	10 55 372 1	ROOF RAILING RFK
FOOT STRIP	10586854	62	1	633	10 55 372 1	ROOF RAILING RFK
FORCE MEASURING AXLE	11261289	1	2	533	11 29 259 6	FORCE MEASURING AXLE EL
FORCE MEASURING AXLE EL	11292596	3	1	525	11 29 259 8	TILT-BACK SUPPORT
FORCE MEASURING STRAP	10530243	31	2	539	10 53 120 7	A-FRAME ELECTRICS
FORK	970591503	1	4	643	99 23 420 14	INTERMEDIATE TENSIONING
FORK	990678914	2	4	643	99 23 420 14	INTERMEDIATE TENSIONING
FORK	991012514	2	4	641	99 23 405 14	INTERMEDIATE TENSIONING
FORK	993034714	1	4	641	99 23 405 14	INTERMEDIATE TENSIONING
FORK ST.CONST.	990678714	1	1	644	99 06 789 14	FORK
FORK ST.CONST.	990678814	2	1	644	99 06 789 14	FORK
FORK ST.CONST.	991011914	40	2	640	99 10 116 14	ROPE GUIDE
FORK ST.CONST.	991012214	41	2	640	99 10 116 14	ROPE GUIDE
FORK ST.CONST.	991012214	2	1	642	99 10 125 14	FORK
FORK ST.CONST.	991012614	1	1	642	99 10 125 14	FORK
FORM HOSE	10337090	45	1	195	11 24 114 0	COOLER INSTALLATION WATE
FORM HOSE	10350439	46	1	195	11 24 114 0	COOLER INSTALLATION WATE
FORM HOSE	11246836	15	1	207	11 24 114 2	SUCTION UNIT AIR
FORM HOSE	11270026	44	1	195	11 24 114 0	COOLER INSTALLATION WATE
FORM HOSE	11287796	25	1	195	11 24 114 0	COOLER INSTALLATION WATE
FORM HOSE	550936214	94	1	196	11 24 114 0	COOLER INSTALLATION WATE
FOUR LIPPED SEALS	10099037	1	24	35	10 52 459 5	SEALING SET
FOUR LIPPED SEALS	11301682	2	10	35	10 52 459 5	SEALING SET

Description	Item	Pos.	Quantity	Sheet	Assembly	Description
FRAME	10566842	1	1	317	11 24 409 1	COVERS
FRAME	11236714	7	1	706	11 21 750 0	LIQUEFIER
FRAME	11244092	2	1	317	11 24 409 1	COVERS
FRAME	11281448	1	1	426	59 22 871 14	FRONT WINDOW CPL
FRAME	602481914	1	1	415	91 65 251 14	CABLE DUCT CABINET 1
FRAME CPL	11247688	1	1	188	11 24 113 8	MOTOR BEARING CPL
FRAME ST.CONST.	10578321	12	1	77	10 58 163 4	CABIN SUSPENSION CPL
FRONT WINDOW	592287214	10	1	426	59 22 871 14	FRONT WINDOW CPL
FRONT WINDOW CPL	592287114	28	1	419	10 35 008 0	CABIN
FRONT WINDOW CPL	592288414	34	1	419	10 35 008 0	CABIN
FUEL FILTER	11821872	38	1	217	11 24 114 5	ASSEMBLY INSTAL.
FUEL FINE FILTER	10146753	1	1	267	10 14 679 7	FUEL FINE-FILTER ASSEMBLY
FUEL FINE FILTER	10429946	2	2	268	10 14 675 3	FUEL FINE FILTER
FUEL FINE-FILTER ASSEMBLY	10146797	201	1	224	12 42 545 4	DIESEL ENGINE
FUEL HOSE	553128608	70	1	218	11 24 114 5	ASSEMBLY INSTAL.
FUEL LINE	9076621	4	1	270	10 14 588 5	LEAK OIL RETURN LINE
FUEL LINES	10143339	212	1	224	12 42 545 4	DIESEL ENGINE
FUEL PREFILTER	10303007	1	1	214	10 55 091 1	ADD-ON PRELIMINARY FUEL F
FUEL SYSTEM	11241144	50	1	92	11 24 048 0	CENTRAL POWER UNIT
FUEL TANK ASSY.	10560732	16	1	18	11 24 047 9	SUPERSTRUCTURE CPL
FUEL TANK CPL	10560733	10	1	64	10 56 073 2	FUEL TANK ASSY.
FUEL TANK ST.CONST.	10560734	10	1	65	10 56 073 3	FUEL TANK CPL
FUSE ASSAYER	10227556	2	1	407	99 20 811 14	RESERVE FUSES
FUSE CARTRIDGE	10224306	1	1	47	10 53 048 9	FUSE HOLDER
FUSE CARTRIDGE	10224306	21	2	407	99 20 811 14	RESERVE FUSES
FUSE CARTRIDGE	10224307	11	3	47	10 53 048 9	FUSE HOLDER
FUSE CARTRIDGE	10224307	22	2	407	99 20 811 14	RESERVE FUSES
FUSE HOLDER	10530489	34	1	45	11 24 519 0	SUPERSTRUCTURE EL
GANGWAY INTERM. SECTION	11294737	621	1	3	01 38 376 14	LR 1300 SX
GANGWAY INTERM. SECTION	11294742	622	1	3	01 38 376 14	LR 1300 SX
GANGWAY INTERM. SECTION	11294743	624	4	3	01 38 376 14	LR 1300 SX
GAS OPERATED SPRING	10800103	2	1	413	69 31 685 14	SAFETY LEVER CPL
GAS SPRING	592287414	13	1	426	59 22 871 14	FRONT WINDOW CPL
GAS SPRING	592323514	11	7	317	11 24 409 1	COVERS
GAS SPRING	592323514	22	3	329	10 54 591 0	MOTOR COWLING
GASKET KIT INT.FLANGE	10138034	3	1	158	10 13 803 3	SEAL KIT CPL.
GAUGE CONNECTION	510629008	318	1	95	11 24 773 5	HYDR POWER UNIT
GAUGE CONNECTION	510629008	205	2	446	11 89 300 5	TUBING HYDR
GAUGE CONNECTION	510664814	200	2	22	11 29 618 6	SUPERSTRUCTURE HYDR
GAUGE CONNECTION	510664814	701	2	486	11 26 260 6	WINCH 1 HYDR
GAUGE CONNECTION	510664814	701	2	501	11 26 261 1	WINCH 2 HYDR
GAUGE CONNECTION	510664814	613	2	620	10 51 726 2	TUBING HYDR
GAUGE CONNECTION	510694514	202	19	22	11 29 618 6	SUPERSTRUCTURE HYDR
GAUGE CONNECTION	510694514	201	2	85	10 51 969 5	A-FRAME ERECTION HYDR
GAUGE CONNECTION	510694514	671	14	95	11 24 773 5	HYDR POWER UNIT
GAUGE CONNECTION	510694514	201	2	345	10 51 969 8	NEEDLE LUFFING WINCH HYD
GAUGE CONNECTION	510694514	201	2	362	10 51 968 7	MAIN LUG HYDR
GAUGE CONNECTION	510694514	203	2	385	10 55 216 1	TUBING HYDR
GAUGE CONNECTION	510694514	204	8	446	11 89 300 5	TUBING HYDR
GAUGE CONNECTION	510694514	700	2	486	11 26 260 6	WINCH 1 HYDR
GAUGE CONNECTION	510694514	700	2	501	11 26 261 1	WINCH 2 HYDR
GAUGE CONNECTION	510694514	201	1	528	10 51 959 1	TUBING HYDR
GAUGE CONNECTION	510694514	202	1	668	10 51 973 8	SELF-LOADING SYSTEM HYD
GAUGE CONNECTION	510694514	700	1	715	10 56 173 5	TUBING HYDR
GAUGE CONNECTION	510695314	201	2	668	10 51 973 8	SELF-LOADING SYSTEM HYD
GAUGE CONNECTION	510695314	706	1	678	11 89 408 3	TUBING HYDR
GAUGE CONNECTION	7409720	201	1	22	11 29 618 6	SUPERSTRUCTURE HYDR
GAUGE CONNECTION	7409720	304	2	95	11 24 773 5	HYDR POWER UNIT
GAUGE CONNECTION	7409720	200	2	385	10 55 216 1	TUBING HYDR
GEAR CAM LIMITSWITCH	606279214	1	1	487	11 21 634 2	WINCH 1 EL

Description	Item	Pos.	Quantity	Sheet	Assembly	Description
GEAR PUMP	512214414	10	1	94	11 24 773 5	HYDR POWER UNIT
GEAR PUMP	512249914	7	1	94	11 24 773 5	HYDR POWER UNIT
GEAR WHEEL	10121982	5	1	256	10 13 382 3	SUCTION PUMP PRE-ASS.
GEAR WHEEL	10121983	4	1	256	10 13 382 3	SUCTION PUMP PRE-ASS.
GEAR WHEEL	10133684	6	1	256	10 13 382 3	SUCTION PUMP PRE-ASS.
GEARBOX	10583865	3	1	365	10 55 156 3	WINCH
GEARBOX	11893213	1	1	489	10 53 039 8	WINCH
GEARBOX COVER	927563901	65	1	396	90 01 376 2	SLEWING GEAR DRIVE
GENERATOR, PRE-ASSEMBLE	10145845	440	1	224	12 42 545 4	DIESEL ENGINE
GLUE	811208201	118	1	153	10 14 131 6	TERMINAL BOARD PRE-ASS.
GLUE	8655023	118	1	117	10 11 835 0	CONNECTION HOUSING
GLUE	8655023	104	1	226	11 38 961 7	CRANKCASE CPL. WITH CYLIN
GLUE	8655032	119	1	119	10 11 835 7	REPAIR KIT CONNECTION HO
GRATING		500	-1	343	10 51 969 7	NEEDLE LUFFING WINCH
GRATING		501	-1	343	10 51 969 7	NEEDLE LUFFING WINCH
GRATING	10222994	46	1	510	11 23 820 3	PIVOT PIECE CPL
GRATING	10227124	11	1	483	99 26 718 14	PEDESTAL
GRATING	10517914	10	1	650	11 29 473 7	GANGWAY INTERM. SECTION
GRATING	10517914	10	1	654	11 29 474 2	GANGWAY INTERM. SECTION
GRATING	10530418	14	1	552	11 28 390 8	BOOM ACCESS
GRATING	10530418	14	1	568	11 28 583 8	BOOM ACCESS
GRATING	10545915	6	1	313	11 24 409 0	PANELLING SUPERSTR. INSTA
GRATING	10552808	10	1	649	10 55 280 7	GRATING CPL
GRATING	10553070	12	1	654	11 29 474 2	GANGWAY INTERM. SECTION
GRATING	10553070	12	3	655	11 29 474 3	GANGWAY INTERM. SECTION
GRATING	10581980	84	1	511	11 23 820 3	PIVOT PIECE CPL
GRATING	10581981	85	1	511	11 23 820 3	PIVOT PIECE CPL
GRATING	10581982	95	1	511	11 23 820 3	PIVOT PIECE CPL
GRATING	10584105	50	1	315	11 24 409 0	PANELLING SUPERSTR. INSTA
GRATING	10598959	10	1	521	10 58 193 7	GRATING CPL
GRATING	10599053	24	1	521	10 58 193 7	GRATING CPL
GRATING	11239010	92	1	511	11 23 820 3	PIVOT PIECE CPL
GRATING	11245758	3	1	636	11 24 575 5	PEDESTAL
GRATING	11245766	5	2	635	11 24 147 8	UC PLATFORM
GRATING	11245767	6	2	635	11 24 147 8	UC PLATFORM
GRATING	11263492	6	1	581	11 28 629 9	MOUNTING PARTS
GRATING	11275747	41	1	510	11 23 820 3	PIVOT PIECE CPL
GRATING	11311245	15	2	552	11 28 390 8	BOOM ACCESS
GRATING	11311245	15	1	568	11 28 583 8	BOOM ACCESS
GRATING	11311245	14	1	575	11 28 626 1	BOOM ACCESS
GRATING	11311371	20	1	568	11 28 583 8	BOOM ACCESS
GRATING	11311371	15	1	575	11 28 626 1	BOOM ACCESS
GRATING	11311390	20	1	575	11 28 626 1	BOOM ACCESS
GRATING	11314134	10	1	655	11 29 474 3	GANGWAY INTERM. SECTION
GRATING	790512314	5	1	581	11 28 629 9	MOUNTING PARTS
GRATING	790512414	4	1	581	11 28 629 9	MOUNTING PARTS
GRATING CPL	10552807	12	1	647	10 55 601 0	FALL PROTECTION RFK
GRATING CPL	10552807	11	1	650	11 29 473 7	GANGWAY INTERM. SECTION
GRATING CPL	10552807	11	1	654	11 29 474 2	GANGWAY INTERM. SECTION
GRATING CPL	10552807	11	1	655	11 29 474 3	GANGWAY INTERM. SECTION
GRATING CPL	10581937	48	1	510	11 23 820 3	PIVOT PIECE CPL
GREASE	10282622	100	1	254	10 13 394 5	LUBRICATING OIL PUMP
GREASE	10282622	100	1	299	10 11 557 7	FLYWHEEL HOUSING MOUNT
GREASE	10282622	100	1	302	10 12 797 9	LOCKING PIECES
GREASE	10285708	100	1	12	11 41 737 0	AIR COMPRESSOR
GREASE	10285708	100	1	227	10 15 445 8	CYLINDER
GREASE	10285708	100	1	228	10 14 768 6	POWER UNIT SUPPORT ATT
GREASE	10285708	100	1	255	10 13 394 7	SUCTION PUMP WITH FASTEN
GREASE	10285708	100	1	274	10 14 736 9	INTAKE STACK ASSEMBLY
GREASE	10285708	100	1	275	10 14 736 4	AIR INTAKE ASSEMBLY

Description	Item	Pos.	Quantity	Sheet	Assembly	Description
GREASE	10285708	100	1	276	10 14 967 6	CONNECTING LINE ADD-ON
GREASE	10285708	100	1	283	10 14 273 4	WATER PUMP WITH FASTENIN
GREASE	10285708	100	1	284	10 14 821 5	THERMOSTAT HOUSING ASS
GREASE	10285708	100	1	286	10 14 274 2	COOLANT PIPE BEND ADD-ON
GREASE	10285708	100	1	288	10 14 601 2	MANIFOLD FOR WATER CPL.
GREASE	10285708	100	1	307	10 14 637 4	LOCKING PIECES
GREASE NIPPLE	11312502	4	1	602	10 50 435 2	ROPE PULLEY
GRIP	10020487	4	1	321	10 57 883 5	DOOR
GRIP	10020487	4	1	323	10 57 897 6	DOOR
GRIP	10020487	4	1	327	10 56 580 8	DOOR
GRIP	10428121	1	1	425	11 25 097 0	SLIDING WINDOW
GRIP	10579145	2	1	326	10 56 623 7	DOOR
GRIP	10579454	2	1	325	10 57 940 0	DOOR
GRIP	7025006	20	1	435	70 24 996	SEAT FRAME
GRIP SHELL	10226472	18	1	423	10 35 007 6	SLIDING DOOR
GRIP SHELL	592289614	2	1	427	59 22 895 14	FLAP CPL
GROMMET	11225402	63	2	315	11 24 409 0	PANELLING SUPERSTR. INSTA
GROMMET NUT M6	7361600	21	1	122	92 73 644	SEAL KIT REGULATING VALVE
GROMMET NUT M6	7361600	21	1	125	92 78 875	PRESSURE CUT-OFF
GROMMET NUT M8	7361601	11	1	109	11 06 730 4	SHUTDOWN VALVE
GROMMET NUT M8	7361601	37	2	122	92 73 644	SEAL KIT REGULATING VALVE
GROOVED NAIL ISO 8746 2X6	431500401	92	2	396	90 01 376 2	SLEWING GEAR DRIVE
GROOVED NAIL ISO 8746 2X6	431500401	96	2	471	96 93 178 01	TRACTION DRIVE
GROOVING BLOCK	9076196	18	1	151	10 12 224 5	REPAIR KIT LEVER
GRUB SCREW	11267417	7	1	107	10 59 347 4	PRESSURE LIMITING VALVE
GRUB SCREW	7373597	17	2	451	51 24 059 14	VARIABLE DISPLACEMENT MO
GRUB SCREW DIN 913 22H	4980900	20	1	125	92 78 875	PRESSURE CUT-OFF
GRUB SCREW DIN 913 M6X6	4980082	21	1	153	10 14 131 6	TERMINAL BOARD PRE-ASS.
GRUB SCREW DIN 914 M6X20	404601014	15	3	616	11 21 552 4	ANGLE INDICATION RFK
GRUB SCREW ISO 4026 M10X4	404403114	21	1	402	11 27 970 6	CABIN CPL
GUARD	10566030	4	1	43	10 22 592 5	COOLER MOTOR
GUARD	11267554	9	1	198	10 57 423 7	COOLER MOTOR
GUARD	11932244	3	1	203	10 57 423 9	COOLER MOTOR
GUARD RING	10120443	3	1	241	10 12 134 5	RK CRANKSHAFT SEAL
GUIDE	10512821	88	2	420	10 35 008 0	CABIN
GUIDE	11292956	17	1	457	10 44 510 2	QUICK RELEASE FITTING
GUIDE	919515414	3	1	716	51 03 361 14	SINGLE-ACTING CYL
GUIDE BUSHING 145/100X130	11310567	40	1	529	10 09 917 3	DOUBLE-ACTING CYL
GUIDE BUSHING M30 X 1.5 X	10352312	35	1	685	59 21 826 14	SUPPORT CYLINDER
GUIDE BUSHING M40 X 1.5 X	10352313	40	1	685	59 21 826 14	SUPPORT CYLINDER
GUIDE CPL	959576314	100	1	421	10 22 645 4	DOOR ACCESSORIES
GUIDE PLATE	7023839	2	1	390	11 94 017 6	HYDRAULIC PARTS DRIVING G
GUIDE PULLEY COMPL.	10149360	3	2	280	10 14 286 0	AIR COND. COMPRESSOR A
GUIDE RING	10351499	120	2	685	59 21 826 14	SUPPORT CYLINDER
GUIDE RING	10352344	65	1	685	59 21 826 14	SUPPORT CYLINDER
GUIDE RING	10352349	70	2	685	59 21 826 14	SUPPORT CYLINDER
GUIDE RING	10352352	75	2	685	59 21 826 14	SUPPORT CYLINDER
GUIDE RING	10352354	95	1	685	59 21 826 14	SUPPORT CYLINDER
GUIDE RING	11267401	11	2	106	11 21 993 0	PUMP HOUSING
GUIDE RING	726206214	100	3	685	59 21 826 14	SUPPORT CYLINDER
GUIDE RING	9266680	18	2	119	10 11 835 7	REPAIR KIT CONNECTION HO
GUIDE RING	9881114	33	2	119	10 11 835 7	REPAIR KIT CONNECTION HO
GUIDE WHEEL	11299752	1	1	469	10 55 716 2	GUIDE WHEEL CPL
GUIDE WHEEL CPL	10557162	1	1	468	10 55 716 1	GUIDE WHEEL UNIT CPL
GUIDE WHEEL UNIT CPL	10557161	2	1	467	11 89 365 0	CRAWLER CARRIER RIGHT CP
GUIDE WHEEL UNIT CPL	10557161	2	1	478	11 89 365 1	CRAWLER CARRIER LEFT CP
GUIDING BOLT	10572236	1	1	459	10 55 154 8	QUICK RELEASE FITTING
GUIDING BOLT	10572236	1	2	514	10 55 157 6	QUICK RELEASE FITTING
GUIDING BRACKET ABOVE	10226463	305	1	421	10 22 645 4	DOOR ACCESSORIES
GUIDING BRACKET BELOW	10226461	228	1	421	10 22 645 4	DOOR ACCESSORIES

Description	Item	Pos.	Quantity	Sheet	Assembly	Description
GUIDING BRACKET CENTRE	10226458	15	1	422	95 95 763 14	GUIDE CPL
GUIDING PIPE	9266847	1	1	237	10 14 591 9	OIL DIPSTICK WITH PIPE
GUIDING RAIL	10226457	9	1	422	95 95 763 14	GUIDE CPL
GUIDING RAIL	10226459	222	1	421	10 22 645 4	DOOR ACCESSORIES
GUIDING RAIL	10226462	300	1	421	10 22 645 4	DOOR ACCESSORIES
GUIDING RAIL ST.CONST.	10537682	1	1	581	11 28 629 9	MOUNTING PARTS
GUIDING RAIL ST.CONST.	919956014	2	2	581	11 28 629 9	MOUNTING PARTS
GUIDING RAIL ST.CONST.	919956114	3	2	581	11 28 629 9	MOUNTING PARTS
GUY ROPE	10350539	10	2	645	97 05 997 03	INTERMEDIATE TENSIONING
GUY ROPE	774760214	1	6	645	97 05 997 03	INTERMEDIATE TENSIONING
GUY ROPE	774760314	4	6	645	97 05 997 03	INTERMEDIATE TENSIONING
GUY ROPE	774760414	3	6	645	97 05 997 03	INTERMEDIATE TENSIONING
GUY ROPE	774760514	2	8	645	97 05 997 03	INTERMEDIATE TENSIONING
GUY ROPE	790538014	9	2	645	97 05 997 03	INTERMEDIATE TENSIONING
HAND LEVER PRESS 400B	885602114	4	1	505	10 56 183 8	TOOL
HANDLE CAP	11694640	9	1	264	10 13 508 0	HIGH PRESSURE CONNECTO
HANDRAIL	10518461	41	1	467	11 89 365 0	CRAWLER CARRIER RIGHT CP
HANDRAIL	10518461	42	1	478	11 89 365 1	CRAWLER CARRIER LEFT CP
HANDRAIL	10523559	11	1	467	11 89 365 0	CRAWLER CARRIER RIGHT CP
HANDRAIL	10523559	11	1	478	11 89 365 1	CRAWLER CARRIER LEFT CP
HANDWHEEL	5609144	53	1	436	10 28 999 3	VIBRATING SYSTEM
HANGER	11274638	21	1	601	79 04 112 14	BOTTOM HOOK BLOCK
HANGER	11274801	22	1	608	79 05 205 14	BOTTOM HOOK BLOCK
HARNESS	10556012	2	1	648	10 55 601 1	FALL PROTECTION CPL
HEAD REST	737022103	12	1	402	11 27 970 6	CABIN CPL
HEAT EXCHANGER	10446225	14	1	94	11 24 773 5	HYDR POWER UNIT
HEAT EXCHANGER	10512662	40	1	432	11 93 934 6	AIR CONDITIONING
HEAT EXCHANGER	11236707	1	1	706	11 21 750 0	LIQUEFIER
HEAT PROTECTION SHEET	10147371	1	1	291	10 14 737 0	HEAT PROTECTION W.FASTEN
HEAT PROTECTION SHEET	12428325	10	1	276	10 14 967 6	CONNECTING LINE ADD-ON
HEAT PROTECTION W.FASTEN	10147370	415	1	224	12 42 545 4	DIESEL ENGINE
HEATING FLANGE ADD-ON	9078314	260	1	224	12 42 545 4	DIESEL ENGINE
HEATING FLANGE PRE.ASS.	10299988	1	1	277	90 78 314	HEATING FLANGE ADD-ON
HEATSHRINK SLEEVING	603018114	18	0.2	584	10 59 863 3	PENDULUM CPL
HEX NUT 8	10411095	5	2	297	11 38 664 5	STARTER
HEX NUT AEHNL.ISO 7042 M8	7381182	11	1	293	10 14 511 2	EXHAUST NOZZLE ATTACHM
HEX NUT DIN 934 M30 8	10584965	11	4	601	79 04 112 14	BOTTOM HOOK BLOCK
HEX NUT DIN 934 M30 8	10584965	11	8	608	79 05 205 14	BOTTOM HOOK BLOCK
HEX NUT DIN 985 M10 10	411901114	8	1	47	10 53 048 9	FUSE HOLDER
HEX NUT DIN 985 M10 10	411901114	80	4	189	10 51 948 1	SUCTION PIPE OIL
HEX NUT DIN 985 M16 10	10544155	36	8	510	11 23 820 3	PIVOT PIECE CPL
HEX NUT DIN 985 M16 10	10544155	29	4	552	11 28 390 8	BOOM ACCESS
HEX NUT DIN 985 M16 10	10544155	29	4	568	11 28 583 8	BOOM ACCESS
HEX NUT DIN 985 M16 10	10544155	29	4	575	11 28 626 1	BOOM ACCESS
HEX NUT DIN 985 M20 10	10544157	18	4	618	10 51 743 9	ROPE LUG CPL RFK
HEX NUT DIN 985 M24 10	10544159	30	8	660	10 51 971 3	SELF-LOADING SYSTEM RFK
HEX NUT DIN 985 M8 8	11236108	20	12	601	79 04 112 14	BOTTOM HOOK BLOCK
HEX NUT DIN 985 M8 8	11236108	20	12	608	79 05 205 14	BOTTOM HOOK BLOCK
HEX NUT DIN EN 1663 M8 A4	11314341	12	3	543	11 23 749 8	SUPPORT CPL
HEX NUT DIN EN 1663 M8 A4	11314341	13	3	562	11 23 290 7	SUPPORT CPL
HEX NUT DIN EN 1663 M8 A4	11314341	17	6	563	11 23 292 2	SUPPORT CPL
HEX NUT DIN EN 1663 M8 A4	11314341	15	4	597	11 25 204 2	SUPPORT CPL
HEX NUT EN 1661 M10 8	4980805	15	1	256	10 13 382 3	SUCTION PUMP PRE-ASS.
HEX NUT EN 1661 M10 8	4980805	4	3	275	10 14 736 4	AIR INTAKE ASSEMBLY
HEX NUT EN 1661 M10 8	4980805	7	1	295	10 14 584 5	GENERATOR, PRE-ASSEMBLE
HEX NUT EN 1661 M10 8	4980805	3	3	296	10 12 037 2	STARTER INSTALLATION
HEX NUT EN 1661 M8 8	10424333	14	3	235	10 15 529 8	OIL SUMP PRE-ASS.
HEX NUT EN 1661 M8 8	10424333	11	2	276	10 14 967 6	CONNECTING LINE ADD-ON
HEX NUT EN 1661 M8 A2-70	485569314	14	16	483	99 26 718 14	PEDESTAL
HEX NUT EN 1661 M8 A2-70	485569314	14	16	636	11 24 575 5	PEDESTAL

Description	Item	Pos.	Quantity	Sheet	Assembly	Description
HEX NUT ISO 10511 M10 A4	10540494	82	11	8	11 92 958 8	AIR DUCT CPL
HEX NUT ISO 10511 M10 A4	10540494	20	2	57	10 51 961 6	OIL COOLER INSTALLATION
HEX NUT ISO 10511 M10 A4	10540494	80	4	60	10 56 070 1	TANK HYDR CPL
HEX NUT ISO 10511 M10 A4	10540494	5	1	68	10 55 268 1	DRIVER INSTALLATION
HEX NUT ISO 10511 M10 A4	10540494	15	4	79	10 56 067 3	BATTERY INSTALLATION CPL
HEX NUT ISO 10511 M10 A4	10540494	82	18	196	11 24 114 0	COOLER INSTALLATION WATE
HEX NUT ISO 10511 M10 A4	10540494	81	10	202	11 24 114 1	COOLER INSTALLATION CHA
HEX NUT ISO 10511 M10 A4	10540494	80	2	211	11 24 114 3	EXHAUST GAS SYSTEM
HEX NUT ISO 10511 M10 A4	10540494	106	2	218	11 24 114 5	ASSEMBLY INSTAL.
HEX NUT ISO 10511 M10 A4	10540494	83	6	311	11 24 114 6	COVER
HEX NUT ISO 10511 M10 A4	10540494	30	54	313	11 24 409 0	PANELLING SUPERSTR. INSTA
HEX NUT ISO 10511 M10 A4	10540494	8	4	329	10 54 591 0	MOTOR COWLING
HEX NUT ISO 10511 M10 A4	10540494	28	12	331	11 24 922 2	COVER UNDERSIDE
HEX NUT ISO 10511 M10 A4	10540494	76	83	335	11 24 483 7	MOUNTING PARTS SUPERST
HEX NUT ISO 10511 M10 A4	10540494	53	22	510	11 23 820 3	PIVOT PIECE CPL
HEX NUT ISO 10511 M10 A4	10540494	15	2	545	99 29 588 14	SUPPORT
HEX NUT ISO 10511 M10 A4	10540494	15	2	546	10 35 063 3	FASTENER
HEX NUT ISO 10511 M10 A4	10540494	18	2	554	11 28 397 7	SUMP PAN CPL
HEX NUT ISO 10511 M10 A4	10540494	18	2	555	11 28 397 8	SUMP PAN CPL
HEX NUT ISO 10511 M10 A4	10540494	18	4	556	11 28 399 5	SUMP PAN CPL
HEX NUT ISO 10511 M10 A4	10540494	18	4	557	11 28 399 7	SUMP PAN CPL
HEX NUT ISO 10511 M10 A4	10540494	67	8	581	11 28 629 9	MOUNTING PARTS
HEX NUT ISO 10511 M10 A4	10540494	21	1	584	10 59 863 3	PENDULUM CPL
HEX NUT ISO 10511 M10 A4	10540494	11	4	585	11 28 357 6	MOUNTING PARTS
HEX NUT ISO 10511 M10 A4	10540494	12	1	591	99 30 800 14	HOIST LIMIT SWITCH INSTAL.
HEX NUT ISO 10511 M10 A4	10540494	47	1	593	99 48 521 14	TIP BOOM CPL
HEX NUT ISO 10511 M10 A4	10540494	39	54	633	10 55 372 1	ROOF RAILING RFK
HEX NUT ISO 10511 M10 A4	10540494	16	2	647	10 55 601 0	FALL PROTECTION RFK
HEX NUT ISO 10511 M10 A4	10540494	16	3	651	11 30 694 4	RAIL CPL
HEX NUT ISO 10511 M10 A4	10540494	12	18	657	10 55 514 8	FALL PROTECTION RFK
HEX NUT ISO 10511 M10 A4	10540494	14	1	664	99 35 606 14	MOUNTING LINK CPL
HEX NUT ISO 10511 M10 A4	10540494	9	2	666	11 23 619 7	SELF-LOADING SYSTEM RFK
HEX NUT ISO 10511 M12 A4	10540495	36	4	77	10 58 163 4	CABIN SUSPENSION CPL
HEX NUT ISO 10511 M12 A4	10540495	20	2	79	10 56 067 3	BATTERY INSTALLATION CPL
HEX NUT ISO 10511 M12 A4	10540495	81	6	189	10 51 948 1	SUCTION PIPE OIL
HEX NUT ISO 10511 M12 A4	10540495	82	4	211	11 24 114 3	EXHAUST GAS SYSTEM
HEX NUT ISO 10511 M12 A4	10540495	105	1	218	11 24 114 5	ASSEMBLY INSTAL.
HEX NUT ISO 10511 M12 A4	10540495	70	8	335	11 24 483 7	MOUNTING PARTS SUPERST
HEX NUT ISO 10511 M12 A4	10540495	23	2	361	10 51 968 6	LUG SUPERSTRUCTURE CPL
HEX NUT ISO 10511 M12 A4	10540495	19	152	467	11 89 365 0	CRAWLER CARRIER RIGHT CP
HEX NUT ISO 10511 M12 A4	10540495	19	152	478	11 89 365 1	CRAWLER CARRIER LEFT CP
HEX NUT ISO 10511 M12 A4	10540495	24	2	510	11 23 820 3	PIVOT PIECE CPL
HEX NUT ISO 10511 M12 A4	10540495	13	4	559	11 94 087 8	ASSEMBLY UNIT
HEX NUT ISO 10511 M12 A4	10540495	56	10	633	10 55 372 1	ROOF RAILING RFK
HEX NUT ISO 10511 M12 A4	10540495	14	2	637	11 27 109 7	LIGHTNING ROD RFK
HEX NUT ISO 10511 M12 A4	10540495	26	2	699	10 58 064 7	VIDEO MONITORING SYSTEM
HEX NUT ISO 10511 M5 A4	10540484	15	2	71	11 26 557 2	MOUNTING PARTS
HEX NUT ISO 10511 M5 A4	10540484	21	2	79	10 56 067 3	BATTERY INSTALLATION CPL
HEX NUT ISO 10511 M5 A4	10540484	12	4	80	11 31 093 2	LIMIT SWITCH INSTALLATION
HEX NUT ISO 10511 M5 A4	10540484	47	4	402	11 27 970 6	CABIN CPL
HEX NUT ISO 10511 M5 A4	10540484	67	8	510	11 23 820 3	PIVOT PIECE CPL
HEX NUT ISO 10511 M5 A4	10540484	43	4	581	11 28 629 9	MOUNTING PARTS
HEX NUT ISO 10511 M5 A4	10540484	19	8	582	11 28 610 5	RETAINING DEVICE CPL
HEX NUT ISO 10511 M5 A4	10540484	20	2	720	10 52 155 4	REFUELLING SYSTEM RFK
HEX NUT ISO 10511 M6 A4	10540492	80	2	8	11 92 958 8	AIR DUCT CPL
HEX NUT ISO 10511 M6 A4	10540492	80	9	196	11 24 114 0	COOLER INSTALLATION WATE
HEX NUT ISO 10511 M6 A4	10540492	84	3	211	11 24 114 3	EXHAUST GAS SYSTEM
HEX NUT ISO 10511 M6 A4	10540492	101	10	218	11 24 114 5	ASSEMBLY INSTAL.
HEX NUT ISO 10511 M6 A4	10540492	46	10	315	11 24 409 0	PANELLING SUPERSTR. INSTA
HEX NUT ISO 10511 M6 A4	10540492	84	3	335	11 24 483 7	MOUNTING PARTS SUPERST

Description	Item	Pos.	Quantity	Sheet	Assembly	Description
HEX NUT ISO 10511 M6 A4	10540492	39	6	467	11 89 365 0	CRAWLER CARRIER RIGHT CP
HEX NUT ISO 10511 M6 A4	10540492	39	6	478	11 89 365 1	CRAWLER CARRIER LEFT CP
HEX NUT ISO 10511 M6 A4	10540492	83	32	511	11 23 820 3	PIVOT PIECE CPL
HEX NUT ISO 10511 M6 A4	10540492	14	18	521	10 58 193 7	GRATING CPL
HEX NUT ISO 10511 M6 A4	10540492	31	8	538	11 24 444 4	A-FRAME 1 CPL
HEX NUT ISO 10511 M6 A4	10540492	19	1	554	11 28 397 7	SUMP PAN CPL
HEX NUT ISO 10511 M6 A4	10540492	19	1	555	11 28 397 8	SUMP PAN CPL
HEX NUT ISO 10511 M6 A4	10540492	19	1	556	11 28 399 5	SUMP PAN CPL
HEX NUT ISO 10511 M6 A4	10540492	19	1	557	11 28 399 7	SUMP PAN CPL
HEX NUT ISO 10511 M6 A4	10540492	14	2	616	11 21 552 4	ANGLE INDICATION RFK
HEX NUT ISO 10511 M6 A4	10540492	35	24	633	10 55 372 1	ROOF RAILING RFK
HEX NUT ISO 10511 M6 A4	10540492	23	2	649	10 55 280 7	GRATING CPL
HEX NUT ISO 10511 M6 A4	10540492	21	2	657	10 55 514 8	FALL PROTECTION RFK
HEX NUT ISO 10511 M6 A4	10540492	23	6	699	10 58 064 7	VIDEO MONITORING SYSTEM
HEX NUT ISO 10511 M8 A4	10540493	81	6	8	11 92 958 8	AIR DUCT CPL
HEX NUT ISO 10511 M8 A4	10540493	16	2	71	11 26 557 2	MOUNTING PARTS
HEX NUT ISO 10511 M8 A4	10540493	17	2	77	10 58 163 4	CABIN SUSPENSION CPL
HEX NUT ISO 10511 M8 A4	10540493	84	8	188	11 24 113 8	MOTOR BEARING CPL
HEX NUT ISO 10511 M8 A4	10540493	81	12	196	11 24 114 0	COOLER INSTALLATION WATE
HEX NUT ISO 10511 M8 A4	10540493	80	14	202	11 24 114 1	COOLER INSTALLATION CHA
HEX NUT ISO 10511 M8 A4	10540493	80	2	205	11 28 574 7	WP
HEX NUT ISO 10511 M8 A4	10540493	80	4	207	11 24 114 2	SUCTION UNIT AIR
HEX NUT ISO 10511 M8 A4	10540493	80	2	212	11 24 114 4	FUEL SYSTEM
HEX NUT ISO 10511 M8 A4	10540493	102	8	218	11 24 114 5	ASSEMBLY INSTAL.
HEX NUT ISO 10511 M8 A4	10540493	41	23	315	11 24 409 0	PANELLING SUPERSTR. INSTA
HEX NUT ISO 10511 M8 A4	10540493	85	37	335	11 24 483 7	MOUNTING PARTS SUPERST
HEX NUT ISO 10511 M8 A4	10540493	26	4	361	10 51 968 6	LUG SUPERSTRUCTURE CPL
HEX NUT ISO 10511 M8 A4	10540493	13	2	376	99 29 386 14	BRACKET CPL
HEX NUT ISO 10511 M8 A4	10540493	13	2	377	99 29 434 14	BRACKET CPL
HEX NUT ISO 10511 M8 A4	10540493	16	8	483	99 26 718 14	PEDESTAL
HEX NUT ISO 10511 M8 A4	10540493	25	64	510	11 23 820 3	PIVOT PIECE CPL
HEX NUT ISO 10511 M8 A4	10540493	19	6	521	10 58 193 7	GRATING CPL
HEX NUT ISO 10511 M8 A4	10540493	15	8	523	99 34 198 14	LIEBHERR SIGN
HEX NUT ISO 10511 M8 A4	10540493	30	6	552	11 28 390 8	BOOM ACCESS
HEX NUT ISO 10511 M8 A4	10540493	14	2	553	11 28 391 3	FIXING CLAMP
HEX NUT ISO 10511 M8 A4	10540493	30	6	568	11 28 583 8	BOOM ACCESS
HEX NUT ISO 10511 M8 A4	10540493	30	6	575	11 28 626 1	BOOM ACCESS
HEX NUT ISO 10511 M8 A4	10540493	44	4	581	11 28 629 9	MOUNTING PARTS
HEX NUT ISO 10511 M8 A4	10540493	24	2	591	99 30 800 14	HOIST LIMIT SWITCH INSTAL.
HEX NUT ISO 10511 M8 A4	10540493	39	12	593	99 48 521 14	TIP BOOM CPL
HEX NUT ISO 10511 M8 A4	10540493	42	40	633	10 55 372 1	ROOF RAILING RFK
HEX NUT ISO 10511 M8 A4	10540493	12	12	635	11 24 147 8	UC PLATFORM
HEX NUT ISO 10511 M8 A4	10540493	12	12	636	11 24 575 5	PEDESTAL
HEX NUT ISO 10511 M8 A4	10540493	35	2	640	99 10 116 14	ROPE GUIDE
HEX NUT ISO 10511 M8 A4	10540493	19	2	647	10 55 601 0	FALL PROTECTION RFK
HEX NUT ISO 10511 M8 A4	10540493	16	4	649	10 55 280 7	GRATING CPL
HEX NUT ISO 10511 M8 A4	10540493	6	2	652	11 23 827 7	ROPE GUARD
HEX NUT ISO 10511 M8 A4	10540493	80	1	653	11 30 567 0	TRANSPORT LASHING
HEX NUT ISO 10511 M8 A4	10540493	24	4	659	11 26 901 8	HOLDER CPL
HEX NUT ISO 10511 M8 A4	10540493	6	4	666	11 23 619 7	SELF-LOADING SYSTEM RFK
HEX NUT ISO 10511 M8 A4	10540493	24	2	699	10 58 064 7	VIDEO MONITORING SYSTEM
HEX NUT ISO 4032 M10 10	4000383	19	4	483	99 26 718 14	PEDESTAL
HEX NUT ISO 4032 M10 8.8	11932239	9	4	203	10 57 423 9	COOLER MOTOR
HEX NUT ISO 4032 M10 A4-70	411514614	80	6	65	10 56 073 3	FUEL TANK CPL
HEX NUT ISO 4032 M10 A4-70	411514614	82	8	188	11 24 113 8	MOTOR BEARING CPL
HEX NUT ISO 4032 M10 A4-70	411514614	81	8	211	11 24 114 3	EXHAUST GAS SYSTEM
HEX NUT ISO 4032 M10 A4-70	411514614	104	6	218	11 24 114 5	ASSEMBLY INSTAL.
HEX NUT ISO 4032 M10 A4-70	411514614	20	4	329	10 54 591 0	MOTOR COWLING
HEX NUT ISO 4032 M10 A4-70	411514614	32	1	402	11 27 970 6	CABIN CPL
HEX NUT ISO 4032 M10 A4-70	411514614	5	4	711	10 52 293 0	SG TACHOGENERATOR RFK

Description	Item	Pos.	Quantity	Sheet	Assembly	Description
HEX NUT ISO 4032 M10 A4-70	411514614	80	3	718	11 31 446 3	CHARGE AIR PIPE CPL
HEX NUT ISO 4032 M12 10	11233292	124	4	30	11 28 647 6	VALVE BLOCK
HEX NUT ISO 4032 M12 A4-70	411516914	85	8	188	11 24 113 8	MOTOR BEARING CPL
HEX NUT ISO 4032 M12 A4-70	411516914	25	8	480	11 31 390 8	CENTRE PART CPL
HEX NUT ISO 4032 M12 A4-70	411516914	43	2	593	99 48 521 14	TIP BOOM CPL
HEX NUT ISO 4032 M12 A4-70	411516914	21	2	637	11 27 109 7	LIGHTNING ROD RFK
HEX NUT ISO 4032 M16 10	10544154	80	10	188	11 24 113 8	MOTOR BEARING CPL
HEX NUT ISO 4032 M24 10	10544158	81	2	188	11 24 113 8	MOTOR BEARING CPL
HEX NUT ISO 4032 M3 A4-70	485546514	50	12	402	11 27 970 6	CABIN CPL
HEX NUT ISO 4032 M3 A4-70	485546514	7	4	440	11 30 962 5	HOLDER CPL
HEX NUT ISO 4032 M4 A4-70	411551214	2	9	438	97 07 857 03	SPIRIT LEVEL ASSY.
HEX NUT ISO 4032 M4 A4-70	411551214	43	2	725	10 52 155 9	MODULE REFUELLING SYSTE
HEX NUT ISO 4032 M5 A4-70	411551114	100	2	218	11 24 114 5	ASSEMBLY INSTAL.
HEX NUT ISO 4032 M5 A4-70	411551114	50	9	681	11 89 568 6	SELF-LOADING SYSTEM RFK
HEX NUT ISO 4032 M6 A4-70	411517114	56	2	402	11 27 970 6	CABIN CPL
HEX NUT ISO 4032 M6 A4-70	411517114	6	4	439	10 53 756 0	LAMP HOLDER CPL
HEX NUT ISO 4032 M6 A4-70	411517114	32	8	480	11 31 390 8	CENTRE PART CPL
HEX NUT ISO 4032 M6 A4-70	411517114	4	4	614	11 22 322 6	MODEM CPL RFK
HEX NUT ISO 4032 M6 A4-70	411517114	47	10	633	10 55 372 1	ROOF RAILING RFK
HEX NUT ISO 4032 M6 A4-70	411517114	23	2	659	11 26 901 8	HOLDER CPL
HEX NUT ISO 4032 M8 A4-70	411515014	83	4	188	11 24 113 8	MOTOR BEARING CPL
HEX NUT ISO 4032 M8 A4-70	411515014	57	7	315	11 24 409 0	PANELLING SUPERSTR. INSTA
HEX NUT ISO 4032 M8 A4-70	411515014	15	26	329	10 54 591 0	MOTOR COWLING
HEX NUT ISO 4032 M8 A4-70	411515014	38	4	402	11 27 970 6	CABIN CPL
HEX NUT ISO 4032 M8 A4-70	411515014	61	2	633	10 55 372 1	ROOF RAILING RFK
HEX NUT ISO 4032 M8 A4-70	411515014	15	4	636	11 24 575 5	PEDESTAL
HEX NUT ISO 4032 M8 A4-70	411515014	15	2	720	10 52 155 4	REFUELLING SYSTEM RFK
HEX NUT ISO 4035 M12 5	4900125	30	2	117	10 11 835 0	CONNECTION HOUSING
HEX NUT ISO 7042 M10 8	411880614	83	4	211	11 24 114 3	EXHAUST GAS SYSTEM
HEX NUT ISO 8673 8	4980986	20	1	157	10 12 226 2	REGULATION REPAIR KIT
HEX NUT ISO 8673 M16X1.5 10	4980548	26	8	115	10 11 834 9	DOUBLE V-PUMP
HEX NUT ISO 8675 M16X1.5 4	4980793	6	1	101	11 21 990 5	ADJUSTMENT
HEX NUT M10X1 8	10012557	3	2	246	11 44 800 5	ROCKER ARM BRACKET PRE
HEX NUT M6	11290855	470	2	98	11 24 682 0	DISTRIBUTOR GEARBOX
HEX NUT M6 8	10411094	3	1	297	11 38 664 5	STARTER
HEX SCREW ASME B18.2.1 UN	409878414	64	4	191	10 57 532 2	INTAKE PIPE OIL CPL
HEX SCREW ASME B18.2.1 U	409878214	62	12	191	10 57 532 2	INTAKE PIPE OIL CPL
HEX SCREW DIN 6921 M10X25	10336008	3	3	307	10 14 637 4	LOCKING PIECES
HEX SCREW DIN 6921 M10X30	10219458	7	4	293	10 14 511 2	EXHAUST NOZZLE ATTACHM
HEX SCREW DIN 6921 M10X30	10219458	3	2	295	10 14 584 5	GENERATOR, PRE-ASSEMBLE
HEX SCREW DIN 6921 M10X35	10333464	2	3	267	10 14 679 7	FUEL FINE-FILTER ASSEMBLY
HEX SCREW DIN 6921 M10X40	10112497	17	1	256	10 13 382 3	SUCTION PUMP PRE-ASS.
HEX SCREW DIN 6921 M10X40	10112497	2	4	280	10 14 286 0	AIR COND. COMPRESSOR A
HEX SCREW DIN 6921 M10X50	10035580	6	1	228	10 14 768 6	POWER UNIT SUPPORT ATT
HEX SCREW DIN 6921 M10X70	10114153	5	9	228	10 14 768 6	POWER UNIT SUPPORT ATT
HEX SCREW DIN 6921 M10X90	10489016	4	6	273	10 14 736 6	AIR INTAKE PIPE ASS.
HEX SCREW DIN 6921 M10X90	10489016	14	3	288	10 14 601 2	MANIFOLD FOR WATER CPL.
HEX SCREW DIN 6921 M16X50	11181806	2	2	298	10 14 286 4	TRANSPORT DEVICE ATTACH
HEX SCREW DIN 6921 M6X20	10018711	2	4	277	90 78 314	HEATING FLANGE ADD-ON
HEX SCREW DIN 6921 M6X40	11656240	6	1	274	10 14 736 9	INTAKE STACK ASSEMBLY
HEX SCREW DIN 6921 M8X25	11004752	2	3	255	10 13 394 7	SUCTION PUMP WITH FASTEN
HEX SCREW DIN 6921 M8X30	11833770	3	2	235	10 15 529 8	OIL SUMP PRE-ASS.
HEX SCREW DIN 6921 M8X45	10005713	2	1	254	10 13 394 5	LUBRICATING OIL PUMP
HEX SCREW DIN 6921 M8X55	10218013	3	18	251	10 12 948 1	OIL COOLER ADD-ON
HEX SCREW DIN 6921 M8X90	11066361	3	2	254	10 13 394 5	LUBRICATING OIL PUMP
HEX SCREW DIN 931 M30X250	11237759	9	4	601	79 04 112 14	BOTTOM HOOK BLOCK
HEX SCREW DIN EN 1665 M8	10005511	9	1	235	10 15 529 8	OIL SUMP PRE-ASS.
HEX SCREW EN 1665 M10X120	10037312	4	8	228	10 14 768 6	POWER UNIT SUPPORT ATT
HEX SCREW EN 1665 M10X12	10113710	4	1	295	10 14 584 5	GENERATOR, PRE-ASSEMBLE
HEX SCREW EN 1665 M10X20	10030518	2	4	281	10 14 611 7	COVERING ASSEMBLY

Description	Item	Pos.	Quantity	Sheet	Assembly	Description
HEX SCREW EN 1665 M10X20	10030518	16	1	288	10 14 601 2	MANIFOLD FOR WATER CPL.
HEX SCREW EN 1665 M10X20	10030518	18	1	294	10 14 622 4	REGULATION BOOST PRESS
HEX SCREW EN 1665 M10X20	10030518	68	2	305	10 15 028 8	CABLE HARNESS MOUNTING
HEX SCREW EN 1665 M10X30	10016908	2	3	12	11 41 737 0	AIR COMPRESSOR
HEX SCREW EN 1665 M10X30	406550714	27	84	331	11 24 922 2	COVER UNDERSIDE
HEX SCREW EN 1665 M10X60	10014638	3	6	273	10 14 736 6	AIR INTAKE PIPE ASS.
HEX SCREW EN 1665 M10X60	10014638	4	2	280	10 14 286 0	AIR COND. COMPRESSOR A
HEX SCREW EN 1665 M10X80	10101657	6	1	280	10 14 286 0	AIR COND. COMPRESSOR A
HEX SCREW EN 1665 M10X80	10101657	3	4	281	10 14 611 7	COVERING ASSEMBLY
HEX SCREW EN 1665 M12X40	4601426	5	2	295	10 14 584 5	GENERATOR, PRE-ASSEMBLE
HEX SCREW EN 1665 M5X10 8.	12207546	52	2	305	10 15 028 8	CABLE HARNESS MOUNTING
HEX SCREW EN 1665 M5X16 8.	12207547	15	2	294	10 14 622 4	REGULATION BOOST PRESS
HEX SCREW EN 1665 M6X16 8.	407350208	4	1	247	10 13 475 1	CYLINDER HEAD COVER ASS
HEX SCREW EN 1665 M6X16 8.	407350208	6	1	248	10 12 653 5	CYLINDER HEAD COVER ASS
HEX SCREW EN 1665 M6X16 8.	407350208	5	1	250	10 13 469 6	CYLINDER HEAD COVER ASS
HEX SCREW EN 1665 M6X16 8.	407350208	22	1	270	10 14 588 5	LEAK OIL RETURN LINE
HEX SCREW EN 1665 M6X16 8.	407350208	16	8	294	10 14 622 4	REGULATION BOOST PRESS
HEX SCREW EN 1665 M6X16 8.	407350208	54	5	305	10 15 028 8	CABLE HARNESS MOUNTING
HEX SCREW EN 1665 M6X30 8.	10290537	10	1	14	11 41 475 7	ACCESSORIES AIR COMPRES
HEX SCREW EN 1665 M8X12 8.	10024115	3	4	282	11 44 013 4	COVER PRE-ASS.
HEX SCREW EN 1665 M8X120	10017158	5	1	234	10 14 844 4	OIL SUMP WITH FASTENING
HEX SCREW EN 1665 M8X16 8.	10005078	12	3	239	10 14 671 6	OIL LINE PRE-ASSEMBLY
HEX SCREW EN 1665 M8X16 8.	10005078	18	1	270	10 14 588 5	LEAK OIL RETURN LINE
HEX SCREW EN 1665 M8X16 8.	10005078	17	4	294	10 14 622 4	REGULATION BOOST PRESS
HEX SCREW EN 1665 M8X16 8.	10005078	60	3	305	10 15 028 8	CABLE HARNESS MOUNTING
HEX SCREW EN 1665 M8X20 8.	10016906	4	2	267	10 14 679 7	FUEL FINE-FILTER ASSEMBLY
HEX SCREW EN 1665 M8X20 8.	10016906	15	2	274	10 14 736 9	INTAKE STACK ASSEMBLY
HEX SCREW EN 1665 M8X20 8.	10016906	3	4	300	10 11 912 8	LOCKING PIECES
HEX SCREW EN 1665 M8X20 8.	10016906	3	1	301	10 12 843 9	LOCKING PIECES
HEX SCREW EN 1665 M8X20 8.	10016906	61	22	305	10 15 028 8	CABLE HARNESS MOUNTING
HEX SCREW EN 1665 M8X25 8.	10009007	2	5	283	10 14 273 4	WATER PUMP WITH FASTENIN
HEX SCREW EN 1665 M8X25 8.	10009007	3	1	287	10 14 274 4	COOLING WATER AIR BLEED
HEX SCREW EN 1665 M8X30 8.	10007782	10	6	232	10 14 201 8	CRANKCASE BREATHER ASS
HEX SCREW EN 1665 M8X30 8.	10007782	10	2	269	10 14 333 9	FUEL LINES
HEX SCREW EN 1665 M8X30 8.	10007782	63	1	305	10 15 028 8	CABLE HARNESS MOUNTING
HEX SCREW EN 1665 M8X35 8.	10113711	2	33	234	10 14 844 4	OIL SUMP WITH FASTENING
HEX SCREW EN 1665 M8X40 8.	10440788	8	2	276	10 14 967 6	CONNECTING LINE ADD-ON
HEX SCREW EN 1665 M8X45 8.	10016907	11	3	232	10 14 201 8	CRANKCASE BREATHER ASS
HEX SCREW EN 1665 M8X50 8.	10005073	4	4	252	10 12 948 0	OIL COOLER, PRE-ASSEMBLE
HEX SCREW EN 1665 M8X65 8.	10100304	4	2	234	10 14 844 4	OIL SUMP WITH FASTENING
HEX SCREW EN 1665 M8X90 8.	10100303	3	5	247	10 13 475 1	CYLINDER HEAD COVER ASS
HEX SCREW EN 1665 M8X90 8.	10100303	3	5	248	10 12 653 5	CYLINDER HEAD COVER ASS
HEX SCREW EN 1665 M8X90 8.	10100303	4	5	250	10 13 469 6	CYLINDER HEAD COVER ASS
HEX SCREW ISO 4014 M10X1	4002195	61	4	189	10 51 948 1	SUCTION PIPE OIL
HEX SCREW ISO 4014 M10X1	4002195	301	2	668	10 51 973 8	SELF-LOADING SYSTEM HYD
HEX SCREW ISO 4014 M12X50	4062009	61	4	192	10 58 017 0	RETURN PIPE
HEX SCREW ISO 4014 M12X65	10013916	4	1	279	90 72 906	INTERMEDIATE GEAR CPL.
HEX SCREW ISO 4014 M12X80	460023503	60	8	20	11 29 618 6	SUPERSTRUCTURE HYDR
HEX SCREW ISO 4014 M16X1	10543975	75	8	511	11 23 820 3	PIVOT PIECE CPL
HEX SCREW ISO 4014 M16X1	10543975	22	4	552	11 28 390 8	BOOM ACCESS
HEX SCREW ISO 4014 M16X1	10543975	22	4	568	11 28 583 8	BOOM ACCESS
HEX SCREW ISO 4014 M16X1	10543975	22	4	575	11 28 626 1	BOOM ACCESS
HEX SCREW ISO 4014 M24X2	10544017	63	2	188	11 24 113 8	MOTOR BEARING CPL
HEX SCREW ISO 4014 M30X1	10544028	10	64	467	11 89 365 0	CRAWLER CARRIER RIGHT CP
HEX SCREW ISO 4014 M30X1	10544028	10	64	478	11 89 365 1	CRAWLER CARRIER LEFT CP
HEX SCREW ISO 4014 M36X23	406144514	20	6	341	99 29 803 14	LASHING BALLAST
HEX SCREW ISO 4017 M10X11	10538824	51	6	188	11 24 113 8	MOTOR BEARING CPL
HEX SCREW ISO 4017 M10X11	10538824	61	2	211	11 24 114 3	EXHAUST GAS SYSTEM
HEX SCREW ISO 4017 M10X12	10539960	13	1	664	99 35 606 14	MOUNTING LINK CPL
HEX SCREW ISO 4017 M10X14	10538826	40	4	633	10 55 372 1	ROOF RAILING RFK

Description	Item	Pos.	Quantity	Sheet	Assembly	Description
HEX SCREW ISO 4017 M10X16	406527314	64	2	188	11 24 113 8	MOTOR BEARING CPL
HEX SCREW ISO 4017 M10X16	406527314	29	8	581	11 28 629 9	MOUNTING PARTS
HEX SCREW ISO 4017 M10X16	406527314	11	4	582	11 28 610 5	RETAINING DEVICE CPL
HEX SCREW ISO 4017 M10X18	406527414	16	8	57	10 51 961 6	OIL COOLER INSTALLATION
HEX SCREW ISO 4017 M10X18	406527414	3	8	81	10 56 069 4	MODULES INSTALLATION
HEX SCREW ISO 4017 M10X18	406527414	57	16	188	11 24 113 8	MOTOR BEARING CPL
HEX SCREW ISO 4017 M10X20	406518714	17	8	57	10 51 961 6	OIL COOLER INSTALLATION
HEX SCREW ISO 4017 M10X20	406518714	56	4	77	10 58 163 4	CABIN SUSPENSION CPL
HEX SCREW ISO 4017 M10X20	406518714	16	4	79	10 56 067 3	BATTERY INSTALLATION CPL
HEX SCREW ISO 4017 M10X20	406518714	61	2	207	11 24 114 2	SUCTION UNIT AIR
HEX SCREW ISO 4017 M10X20	406518714	62	10	311	11 24 114 6	COVER
HEX SCREW ISO 4017 M10X20	406518714	25	14	402	11 27 970 6	CABIN CPL
HEX SCREW ISO 4017 M10X20	406518714	17	2	510	11 23 820 3	PIVOT PIECE CPL
HEX SCREW ISO 4017 M10X20	406518714	3	3	541	99 14 137 14	DEFLECTION PULLEY CPL
HEX SCREW ISO 4017 M10X20	406518714	16	8	593	99 48 521 14	TIP BOOM CPL
HEX SCREW ISO 4017 M10X25	11932241	7	12	203	10 57 423 9	COOLER MOTOR
HEX SCREW ISO 4017 M10X25	4066093	64	8	192	10 58 017 0	RETURN PIPE
HEX SCREW ISO 4017 M10X25	406511914	60	12	60	10 56 070 1	TANK HYDR CPL
HEX SCREW ISO 4017 M10X25	406511914	60	6	191	10 57 532 2	INTAKE PIPE OIL CPL
HEX SCREW ISO 4017 M10X25	406511914	60	1	193	11 24 113 9	ADD-ON PARTS DIESEL ENGIN
HEX SCREW ISO 4017 M10X25	406511914	65	16	195	11 24 114 0	COOLER INSTALLATION WATE
HEX SCREW ISO 4017 M10X25	406511914	63	8	202	11 24 114 1	COOLER INSTALLATION CHA
HEX SCREW ISO 4017 M10X25	406511914	87	2	218	11 24 114 5	ASSEMBLY INSTAL.
HEX SCREW ISO 4017 M10X25	406511914	61	40	311	11 24 114 6	COVER
HEX SCREW ISO 4017 M10X25	406511914	23	35	313	11 24 409 0	PANELLING SUPERSTR. INSTA
HEX SCREW ISO 4017 M10X25	406511914	79	24	335	11 24 483 7	MOUNTING PARTS SUPERST
HEX SCREW ISO 4017 M10X25	406511914	26	2	357	96 96 543 01	WINCH FRAME
HEX SCREW ISO 4017 M10X25	406511914	30	2	510	11 23 820 3	PIVOT PIECE CPL
HEX SCREW ISO 4017 M10X25	406511914	19	12	618	10 51 743 9	ROPE LUG CPL RFK
HEX SCREW ISO 4017 M10X30	4066098	67	48	22	11 29 618 6	SUPERSTRUCTURE HYDR
HEX SCREW ISO 4017 M10X30	4066098	59	12	94	11 24 773 5	HYDR POWER UNIT
HEX SCREW ISO 4017 M10X30	4066098	63	12	192	10 58 017 0	RETURN PIPE
HEX SCREW ISO 4017 M10X30	406511614	63	6	8	11 92 958 8	AIR DUCT CPL
HEX SCREW ISO 4017 M10X30	406511614	18	2	57	10 51 961 6	OIL COOLER INSTALLATION
HEX SCREW ISO 4017 M10X30	406511614	53	2	188	11 24 113 8	MOTOR BEARING CPL
HEX SCREW ISO 4017 M10X30	406511614	66	8	195	11 24 114 0	COOLER INSTALLATION WATE
HEX SCREW ISO 4017 M10X30	406511614	60	14	211	11 24 114 3	EXHAUST GAS SYSTEM
HEX SCREW ISO 4017 M10X30	406511614	60	4	311	11 24 114 6	COVER
HEX SCREW ISO 4017 M10X30	406511614	31	28	313	11 24 409 0	PANELLING SUPERSTR. INSTA
HEX SCREW ISO 4017 M10X30	406511614	80	46	335	11 24 483 7	MOUNTING PARTS SUPERST
HEX SCREW ISO 4017 M10X30	406511614	13	16	340	10 52 656 0	MOUNTING PARTS
HEX SCREW ISO 4017 M10X30	406511614	94	2	511	11 23 820 3	PIVOT PIECE CPL
HEX SCREW ISO 4017 M10X35	4001246	55	16	20	11 29 618 6	SUPERSTRUCTURE HYDR
HEX SCREW ISO 4017 M10X35	4001246	52	4	94	11 24 773 5	HYDR POWER UNIT
HEX SCREW ISO 4017 M10X35	4001246	6	16	385	10 55 216 1	TUBING HYDR
HEX SCREW ISO 4017 M10X35	4001246	670	4	528	10 51 959 1	TUBING HYDR
HEX SCREW ISO 4017 M10X35	4001246	616	4	668	10 51 973 8	SELF-LOADING SYSTEM HYD
HEX SCREW ISO 4017 M10X35	406509314	64	1	8	11 92 958 8	AIR DUCT CPL
HEX SCREW ISO 4017 M10X35	406509314	67	6	195	11 24 114 0	COOLER INSTALLATION WATE
HEX SCREW ISO 4017 M10X35	406509314	64	2	202	11 24 114 1	COOLER INSTALLATION CHA
HEX SCREW ISO 4017 M10X35	406509314	63	2	311	11 24 114 6	COVER
HEX SCREW ISO 4017 M10X35	406509314	17	12	329	10 54 591 0	MOTOR COWLING
HEX SCREW ISO 4017 M10X35	406509314	81	23	335	11 24 483 7	MOUNTING PARTS SUPERST
HEX SCREW ISO 4017 M10X35	406509314	87	16	511	11 23 820 3	PIVOT PIECE CPL
HEX SCREW ISO 4017 M10X35	406509314	14	2	554	11 28 397 7	SUMP PAN CPL
HEX SCREW ISO 4017 M10X35	406509314	14	2	555	11 28 397 8	SUMP PAN CPL
HEX SCREW ISO 4017 M10X35	406509314	14	4	556	11 28 399 5	SUMP PAN CPL
HEX SCREW ISO 4017 M10X35	406509314	14	4	557	11 28 399 7	SUMP PAN CPL
HEX SCREW ISO 4017 M10X35	406509314	12	4	711	10 52 293 0	SG TACHOGENERATOR RFK
HEX SCREW ISO 4017 M10X40	11932240	8	4	203	10 57 423 9	COOLER MOTOR

Description	Item	Pos.	Quantity	Sheet	Assembly	Description
HEX SCREW ISO 4017 M10X40	10539971	11	1	591	99 30 800 14	HOIST LIMIT SWITCH INSTAL.
HEX SCREW ISO 4017 M10X40	10539971	45	1	593	99 48 521 14	TIP BOOM CPL
HEX SCREW ISO 4017 M10X40	406527814	65	4	8	11 92 958 8	AIR DUCT CPL
HEX SCREW ISO 4017 M10X40	406527814	45	4	315	11 24 409 0	PANELLING SUPERSTR. INSTA
HEX SCREW ISO 4017 M10X40	406527814	82	8	335	11 24 483 7	MOUNTING PARTS SUPERST
HEX SCREW ISO 4017 M10X40	406527814	4	3	541	99 14 137 14	DEFLECTION PULLEY CPL
HEX SCREW ISO 4017 M10X40	406527814	15	4	647	10 55 601 0	FALL PROTECTION RFK
HEX SCREW ISO 4017 M10X45	406512014	19	2	57	10 51 961 6	OIL COOLER INSTALLATION
HEX SCREW ISO 4017 M10X45	406512014	54	31	315	11 24 409 0	PANELLING SUPERSTR. INSTA
HEX SCREW ISO 4017 M10X45	406512014	19	8	329	10 54 591 0	MOTOR COWLING
HEX SCREW ISO 4017 M10X45	406512014	83	1	335	11 24 483 7	MOUNTING PARTS SUPERST
HEX SCREW ISO 4017 M10X45	406512014	14	3	651	11 30 694 4	RAIL CPL
HEX SCREW ISO 4017 M10X50	406518614	24	5	313	11 24 409 0	PANELLING SUPERSTR. INSTA
HEX SCREW ISO 4017 M10X50	406518614	21	2	329	10 54 591 0	MOTOR COWLING
HEX SCREW ISO 4017 M10X50	406518614	47	8	640	99 10 116 14	ROPE GUIDE
HEX SCREW ISO 4017 M10X55	10538822	50	8	640	99 10 116 14	ROPE GUIDE
HEX SCREW ISO 4017 M10X60	10539959	14	8	329	10 54 591 0	MOTOR COWLING
HEX SCREW ISO 4017 M10X60	10539959	41	34	633	10 55 372 1	ROOF RAILING RFK
HEX SCREW ISO 4017 M10X65	10538823	62	4	207	11 24 114 2	SUCTION UNIT AIR
HEX SCREW ISO 4017 M10X65	10538823	9	4	585	11 28 357 6	MOUNTING PARTS
HEX SCREW ISO 4017 M10X70	406511214	88	6	218	11 24 114 5	ASSEMBLY INSTAL.
HEX SCREW ISO 4017 M10X75	10539293	17	6	79	10 56 067 3	BATTERY INSTALLATION CPL
HEX SCREW ISO 4017 M10X75	10539293	100	1	335	11 24 483 7	MOUNTING PARTS SUPERST
HEX SCREW ISO 4017 M10X75	10539293	8	2	666	11 23 619 7	SELF-LOADING SYSTEM RFK
HEX SCREW ISO 4017 M10X80	406527914	3	1	68	10 55 268 1	DRIVER INSTALLATION
HEX SCREW ISO 4017 M10X80	406527914	68	4	195	11 24 114 0	COOLER INSTALLATION WATE
HEX SCREW ISO 4017 M10X80	406527914	14	2	546	10 35 063 3	FASTENER
HEX SCREW ISO 4017 M10X80	406527914	38	16	633	10 55 372 1	ROOF RAILING RFK
HEX SCREW ISO 4017 M10X85	10539294	14	2	647	10 55 601 0	FALL PROTECTION RFK
HEX SCREW ISO 4017 M10X90	406512114	14	2	545	99 29 588 14	SUPPORT
HEX SCREW ISO 4017 M12X13	10538834	24	8	480	11 31 390 8	CENTRE PART CPL
HEX SCREW ISO 4017 M12X16	406528014	5	2	439	10 53 756 0	LAMP HOLDER CPL
HEX SCREW ISO 4017 M12X20	406517714	21	2	77	10 58 163 4	CABIN SUSPENSION CPL
HEX SCREW ISO 4017 M12X20	406517714	65	2	202	11 24 114 1	COOLER INSTALLATION CHA
HEX SCREW ISO 4017 M12X20	406517714	23	12	341	99 29 803 14	LASHING BALLAST
HEX SCREW ISO 4017 M12X25	4980977	46	4	151	10 12 224 5	REPAIR KIT LEVER
HEX SCREW ISO 4017 M12X25	406517914	56	4	188	11 24 113 8	MOTOR BEARING CPL
HEX SCREW ISO 4017 M12X25	406517914	24	7	467	11 89 365 0	CRAWLER CARRIER RIGHT CP
HEX SCREW ISO 4017 M12X25	406517914	24	7	478	11 89 365 1	CRAWLER CARRIER LEFT CP
HEX SCREW ISO 4017 M12X25	406517914	14	8	538	11 24 444 4	A-FRAME 1 CPL
HEX SCREW ISO 4017 M12X25	406517914	28	8	590	99 23 398 14	ROLLER SET
HEX SCREW ISO 4017 M12X30	4066124	56	12	94	11 24 773 5	HYDR POWER UNIT
HEX SCREW ISO 4017 M12X30	406517314	62	12	60	10 56 070 1	TANK HYDR CPL
HEX SCREW ISO 4017 M12X30	406517314	73	3	335	11 24 483 7	MOUNTING PARTS SUPERST
HEX SCREW ISO 4017 M12X30	406517314	51	4	357	96 96 543 01	WINCH FRAME
HEX SCREW ISO 4017 M12X30	406517314	2	8	370	99 29 258 14	LUG SHEAVE SET
HEX SCREW ISO 4017 M12X30	406517314	15	2	442	99 18 041 14	LASHING SUPERSTRUCTURE
HEX SCREW ISO 4017 M12X30	406517314	18	152	467	11 89 365 0	CRAWLER CARRIER RIGHT CP
HEX SCREW ISO 4017 M12X30	406517314	18	152	478	11 89 365 1	CRAWLER CARRIER LEFT CP
HEX SCREW ISO 4017 M12X30	406517314	22	16	480	11 31 390 8	CENTRE PART CPL
HEX SCREW ISO 4017 M12X30	406517314	16	4	497	11 22 050 0	WINCHES INSTALLATION
HEX SCREW ISO 4017 M12X30	406517314	16	4	503	11 22 050 1	WINCHES INSTALLATION
HEX SCREW ISO 4017 M12X30	406517314	16	4	510	11 23 820 3	PIVOT PIECE CPL
HEX SCREW ISO 4017 M12X30	406517314	15	2	593	99 48 521 14	TIP BOOM CPL
HEX SCREW ISO 4017 M12X30	406517314	20	2	637	11 27 109 7	LIGHTNING ROD RFK
HEX SCREW ISO 4017 M12X35	4066122	65	8	22	11 29 618 6	SUPERSTRUCTURE HYDR
HEX SCREW ISO 4017 M12X35	4066122	65	6	192	10 58 017 0	RETURN PIPE
HEX SCREW ISO 4017 M12X35	406518414	89	1	218	11 24 114 5	ASSEMBLY INSTAL.
HEX SCREW ISO 4017 M12X35	406518414	18	4	510	11 23 820 3	PIVOT PIECE CPL
HEX SCREW ISO 4017 M12X40	4600366	61	36	22	11 29 618 6	SUPERSTRUCTURE HYDR

Description	Item	Pos.	Quantity	Sheet	Assembly	Description
HEX SCREW ISO 4017 M12X40	4600366	640	8	345	10 51 969 8	NEEDLE LUFFING WINCH HYD
HEX SCREW ISO 4017 M12X40	4600366	7	8	385	10 55 216 1	TUBING HYDR
HEX SCREW ISO 4017 M12X40	406511414	67	8	188	11 24 113 8	MOTOR BEARING CPL
HEX SCREW ISO 4017 M12X40	406511414	60	6	189	10 51 948 1	SUCTION PIPE OIL
HEX SCREW ISO 4017 M12X40	406511414	22	3	361	10 51 968 6	LUG SUPERSTRUCTURE CPL
HEX SCREW ISO 4017 M12X40	406511414	49	2	510	11 23 820 3	PIVOT PIECE CPL
HEX SCREW ISO 4017 M12X45	4600706	17	4	343	10 51 969 7	NEEDLE LUFFING WINCH
HEX SCREW ISO 4017 M12X45	406519214	62	4	211	11 24 114 3	EXHAUST GAS SYSTEM
HEX SCREW ISO 4017 M12X50	406512614	66	1	202	11 24 114 1	COOLER INSTALLATION CHA
HEX SCREW ISO 4017 M12X50	406512614	16	4	559	11 94 087 8	ASSEMBLY UNIT
HEX SCREW ISO 4017 M12X55	4902260	60	10	192	10 58 017 0	RETURN PIPE
HEX SCREW ISO 4017 M12X55	406527614	35	4	77	10 58 163 4	CABIN SUSPENSION CPL
HEX SCREW ISO 4017 M12X70	10554335	54	8	20	11 29 618 6	SUPERSTRUCTURE HYDR
HEX SCREW ISO 4017 M12X70	406527714	13	2	637	11 27 109 7	LIGHTNING ROD RFK
HEX SCREW ISO 4017 M12X80	10538830	74	8	335	11 24 483 7	MOUNTING PARTS SUPERST
HEX SCREW ISO 4017 M14X1	10539311	6	6	362	10 51 968 7	MAIN LUG HYDR
HEX SCREW ISO 4017 M14X45	10539300	62	24	22	11 29 618 6	SUPERSTRUCTURE HYDR
HEX SCREW ISO 4017 M14X45	10539300	615	2	362	10 51 968 7	MAIN LUG HYDR
HEX SCREW ISO 4017 M14X45	10539300	19	16	446	11 89 300 5	TUBING HYDR
HEX SCREW ISO 4017 M14X45	10539300	750	8	486	11 26 260 6	WINCH 1 HYDR
HEX SCREW ISO 4017 M14X45	10539300	750	16	501	11 26 261 1	WINCH 2 HYDR
HEX SCREW ISO 4017 M14X70	10539305	17	8	446	11 89 300 5	TUBING HYDR
HEX SCREW ISO 4017 M14X90	10539307	10	4	486	11 26 260 6	WINCH 1 HYDR
HEX SCREW ISO 4017 M14X90	10539307	10	4	501	11 26 261 1	WINCH 2 HYDR
HEX SCREW ISO 4017 M16X1	10543914	62	2	188	11 24 113 8	MOTOR BEARING CPL
HEX SCREW ISO 4017 M16X25	10539315	62	4	193	11 24 113 9	ADD-ON PARTS DIESEL ENGIN
HEX SCREW ISO 4017 M16X25	10539315	29	2	361	10 51 968 6	LUG SUPERSTRUCTURE CPL
HEX SCREW ISO 4017 M16X25	10539315	35	4	467	11 89 365 0	CRAWLER CARRIER RIGHT CP
HEX SCREW ISO 4017 M16X25	10539315	35	4	478	11 89 365 1	CRAWLER CARRIER LEFT CP
HEX SCREW ISO 4017 M16X30	10539316	4	4	68	10 55 268 1	DRIVER INSTALLATION
HEX SCREW ISO 4017 M16X30	10539316	30	8	681	11 89 568 6	SELF-LOADING SYSTEM RFK
HEX SCREW ISO 4017 M16X35	10539317	60	6	64	10 56 073 2	FUEL TANK ASSY.
HEX SCREW ISO 4017 M16X35	10539317	59	8	188	11 24 113 8	MOTOR BEARING CPL
HEX SCREW ISO 4017 M16X35	10539317	103	2	335	11 24 483 7	MOUNTING PARTS SUPERST
HEX SCREW ISO 4017 M16X35	10539317	52	54	467	11 89 365 0	CRAWLER CARRIER RIGHT CP
HEX SCREW ISO 4017 M16X35	10539317	52	54	478	11 89 365 1	CRAWLER CARRIER LEFT CP
HEX SCREW ISO 4017 M16X35	10539317	31	2	590	99 23 398 14	ROLLER SET
HEX SCREW ISO 4017 M16X40	10539318	58	8	188	11 24 113 8	MOTOR BEARING CPL
HEX SCREW ISO 4017 M16X40	10539318	7	8	357	96 96 543 01	WINCH FRAME
HEX SCREW ISO 4017 M16X40	10539318	17	28	480	11 31 390 8	CENTRE PART CPL
HEX SCREW ISO 4017 M16X40	10539318	38	2	590	99 23 398 14	ROLLER SET
HEX SCREW ISO 4017 M16X45	10543902	60	12	188	11 24 113 8	MOTOR BEARING CPL
HEX SCREW ISO 4017 M16X45	10543902	31	10	350	93 88 500 01	ROPE DRUM
HEX SCREW ISO 4017 M16X45	10543902	11	4	357	96 96 543 01	WINCH FRAME
HEX SCREW ISO 4017 M16X45	10543902	15	4	382	10 51 968 2	SG SUPERSTRUCTURE
HEX SCREW ISO 4017 M16X45	10543902	39	4	590	99 23 398 14	ROLLER SET
HEX SCREW ISO 4017 M16X50	10543903	62	3	58	10 56 070 0	TANK INSTALLATION HYDR
HEX SCREW ISO 4017 M16X50	10543903	3	28	357	96 96 543 01	WINCH FRAME
HEX SCREW ISO 4017 M16X50	10543903	13	4	361	10 51 968 6	LUG SUPERSTRUCTURE CPL
HEX SCREW ISO 4017 M16X55	10543904	63	3	58	10 56 070 0	TANK INSTALLATION HYDR
HEX SCREW ISO 4017 M16X60	10543905	61	8	188	11 24 113 8	MOTOR BEARING CPL
HEX SCREW ISO 4017 M16X60	10543905	28	12	361	10 51 968 6	LUG SUPERSTRUCTURE CPL
HEX SCREW ISO 4017 M16X70	10543907	57	4	94	11 24 773 5	HYDR POWER UNIT
HEX SCREW ISO 4017 M16X90	10543910	27	8	467	11 89 365 0	CRAWLER CARRIER RIGHT CP
HEX SCREW ISO 4017 M16X90	10543910	27	8	478	11 89 365 1	CRAWLER CARRIER LEFT CP
HEX SCREW ISO 4017 M20X1	10543932	4	4	467	11 89 365 0	CRAWLER CARRIER RIGHT CP
HEX SCREW ISO 4017 M20X1	10543932	4	4	478	11 89 365 1	CRAWLER CARRIER LEFT CP
HEX SCREW ISO 4017 M20X25	10543917	4	1	498	10 57 462 9	PIN CPL
HEX SCREW ISO 4017 M20X30	10543918	48	2	640	99 10 116 14	ROPE GUIDE
HEX SCREW ISO 4017 M20X35	10543919	63	2	207	11 24 114 2	SUCTION UNIT AIR

Description	Item	Pos.	Quantity	Sheet	Assembly	Description
HEX SCREW ISO 4017 M20X35	10543919	48	2	538	11 24 444 4	A-FRAME 1 CPL
HEX SCREW ISO 4017 M20X35	10543919	51	2	640	99 10 116 14	ROPE GUIDE
HEX SCREW ISO 4017 M20X40	10543920	14	22	361	10 51 968 6	LUG SUPERSTRUCTURE CPL
HEX SCREW ISO 4017 M20X40	10543920	44	4	467	11 89 365 0	CRAWLER CARRIER RIGHT CP
HEX SCREW ISO 4017 M20X40	10543920	87	2	471	96 93 178 01	TRACTION DRIVE
HEX SCREW ISO 4017 M20X40	10543920	41	4	478	11 89 365 1	CRAWLER CARRIER LEFT CP
HEX SCREW ISO 4017 M20X45	10543921	18	4	480	11 31 390 8	CENTRE PART CPL
HEX SCREW ISO 4017 M20X45	10543921	49	2	538	11 24 444 4	A-FRAME 1 CPL
HEX SCREW ISO 4017 M20X50	10543922	58	4	94	11 24 773 5	HYDR POWER UNIT
HEX SCREW ISO 4017 M20X50	10543922	25	4	618	10 51 743 9	ROPE LUG CPL RFK
HEX SCREW ISO 4017 M20X60	10543924	15	4	497	11 22 050 0	WINCHES INSTALLATION
HEX SCREW ISO 4017 M20X60	10543924	15	4	503	11 22 050 1	WINCHES INSTALLATION
HEX SCREW ISO 4017 M20X65	10543925	68	12	471	96 93 178 01	TRACTION DRIVE
HEX SCREW ISO 4017 M20X75	10545854	22	2	467	11 89 365 0	CRAWLER CARRIER RIGHT CP
HEX SCREW ISO 4017 M20X75	10545854	22	2	478	11 89 365 1	CRAWLER CARRIER LEFT CP
HEX SCREW ISO 4017 M20X75	10545854	47	4	538	11 24 444 4	A-FRAME 1 CPL
HEX SCREW ISO 4017 M24X80	10543944	25	12	467	11 89 365 0	CRAWLER CARRIER RIGHT CP
HEX SCREW ISO 4017 M24X80	10543944	25	12	478	11 89 365 1	CRAWLER CARRIER LEFT CP
HEX SCREW ISO 4017 M5X12	11250998	468	8	98	11 24 682 0	DISTRIBUTOR GEARBOX
HEX SCREW ISO 4017 M5X12	485553914	16	3	711	10 52 293 0	SG TACHOGENERATOR RFK
HEX SCREW ISO 4017 M5X20	406501814	22	2	79	10 56 067 3	BATTERY INSTALLATION CPL
HEX SCREW ISO 4017 M5X20	406501814	62	8	510	11 23 820 3	PIVOT PIECE CPL
HEX SCREW ISO 4017 M5X55	10567564	33	3	681	11 89 568 6	SELF-LOADING SYSTEM RFK
HEX SCREW ISO 4017 M6X12	485557714	36	3	350	93 88 500 01	ROPE DRUM
HEX SCREW ISO 4017 M6X12	485557714	29	8	402	11 27 970 6	CABIN CPL
HEX SCREW ISO 4017 M6X12	485557714	5	2	614	11 22 322 6	MODEM CPL RFK
HEX SCREW ISO 4017 M6X16	406501714	79	5	218	11 24 114 5	ASSEMBLY INSTAL.
HEX SCREW ISO 4017 M6X16	406501714	22	5	402	11 27 970 6	CABIN CPL
HEX SCREW ISO 4017 M6X16	406501714	4	8	439	10 53 756 0	LAMP HOLDER CPL
HEX SCREW ISO 4017 M6X16	406501714	18	3	699	10 58 064 7	VIDEO MONITORING SYSTEM
HEX SCREW ISO 4017 M6X20	406532614	68	1	335	11 24 483 7	MOUNTING PARTS SUPERST
HEX SCREW ISO 4017 M6X20	406532614	13	3	497	11 22 050 0	WINCHES INSTALLATION
HEX SCREW ISO 4017 M6X20	406532614	13	3	503	11 22 050 1	WINCHES INSTALLATION
HEX SCREW ISO 4017 M6X20	406532614	60	24	510	11 23 820 3	PIVOT PIECE CPL
HEX SCREW ISO 4017 M6X20	406532614	13	18	521	10 58 193 7	GRATING CPL
HEX SCREW ISO 4017 M6X20	406532614	30	8	538	11 24 444 4	A-FRAME 1 CPL
HEX SCREW ISO 4017 M6X20	406532614	24	2	618	10 51 743 9	ROPE LUG CPL RFK
HEX SCREW ISO 4017 M6X20	406532614	22	2	649	10 55 280 7	GRATING CPL
HEX SCREW ISO 4017 M6X20	406532614	20	2	657	10 55 514 8	FALL PROTECTION RFK
HEX SCREW ISO 4017 M6X20	406532614	17	2	659	11 26 901 8	HOLDER CPL
HEX SCREW ISO 4017 M6X20	406532614	21	3	699	10 58 064 7	VIDEO MONITORING SYSTEM
HEX SCREW ISO 4017 M6X20	406532614	4	4	711	10 52 293 0	SG TACHOGENERATOR RFK
HEX SCREW ISO 4017 M6X25	406518514	63	3	211	11 24 114 3	EXHAUST GAS SYSTEM
HEX SCREW ISO 4017 M6X25	406518514	80	10	218	11 24 114 5	ASSEMBLY INSTAL.
HEX SCREW ISO 4017 M6X30	10538797	2	4	614	11 22 322 6	MODEM CPL RFK
HEX SCREW ISO 4017 M6X35	406551114	69	2	335	11 24 483 7	MOUNTING PARTS SUPERST
HEX SCREW ISO 4017 M6X45	10538799	83	2	218	11 24 114 5	ASSEMBLY INSTAL.
HEX SCREW ISO 4017 M6X45	10538799	12	2	616	11 21 552 4	ANGLE INDICATION RFK
HEX SCREW ISO 4017 M6X50	10526837	84	2	218	11 24 114 5	ASSEMBLY INSTAL.
HEX SCREW ISO 4017 M6X50	10526837	55	1	402	11 27 970 6	CABIN CPL
HEX SCREW ISO 4017 M6X50	10526837	13	16	480	11 31 390 8	CENTRE PART CPL
HEX SCREW ISO 4017 M6X55	10538800	60	2	8	11 92 958 8	AIR DUCT CPL
HEX SCREW ISO 4017 M6X60	10538801	31	8	480	11 31 390 8	CENTRE PART CPL
HEX SCREW ISO 4017 M6X8 A4	10538796	12	2	658	10 55 722 4	FALL PROTECTION RFK
HEX SCREW ISO 4017 M8X10	10538806	33	2	640	99 10 116 14	ROPE GUIDE
HEX SCREW ISO 4017 M8X100	10538812	29	4	510	11 23 820 3	PIVOT PIECE CPL
HEX SCREW ISO 4017 M8X12	406501614	10	4	582	11 28 610 5	RETAINING DEVICE CPL
HEX SCREW ISO 4017 M8X16	406501514	11	2	75	92 65 477 14	FIRE EXTINGUISHER RFK
HEX SCREW ISO 4017 M8X16	406501514	66	6	77	10 58 163 4	CABIN SUSPENSION CPL
HEX SCREW ISO 4017 M8X16	406501514	59	6	195	11 24 114 0	COOLER INSTALLATION WATE

Description	Item	Pos.	Quantity	Sheet	Assembly	Description
HEX SCREW ISO 4017 M8X16	406501514	18	6	382	10 51 968 2	SG SUPERSTRUCTURE
HEX SCREW ISO 4017 M8X16	406501514	39	14	402	11 27 970 6	CABIN CPL
HEX SCREW ISO 4017 M8X16	406501514	3	2	440	11 30 962 5	HOLDER CPL
HEX SCREW ISO 4017 M8X16	406501514	32	4	681	11 89 568 6	SELF-LOADING SYSTEM RFK
HEX SCREW ISO 4017 M8X16	406501514	6	1	700	10 57 848 6	MONITOR CABIN ADD-ON
HEX SCREW ISO 4017 M8X20	406518814	54	4	188	11 24 113 8	MOTOR BEARING CPL
HEX SCREW ISO 4017 M8X20	406518814	81	4	218	11 24 114 5	ASSEMBLY INSTAL.
HEX SCREW ISO 4017 M8X20	406518814	94	8	335	11 24 483 7	MOUNTING PARTS SUPERST
HEX SCREW ISO 4017 M8X20	406518814	23	4	535	11 27 536 5	TILT-BACK SUPPORTS INSTAL
HEX SCREW ISO 4017 M8X20	406518814	20	6	699	10 58 064 7	VIDEO MONITORING SYSTEM
HEX SCREW ISO 4017 M8X20	406518814	14	3	711	10 52 293 0	SG TACHOGENERATOR RFK
HEX SCREW ISO 4017 M8X25	406501414	61	4	8	11 92 958 8	AIR DUCT CPL
HEX SCREW ISO 4017 M8X25	406501414	65	8	188	11 24 113 8	MOTOR BEARING CPL
HEX SCREW ISO 4017 M8X25	406501414	60	4	202	11 24 114 1	COOLER INSTALLATION CHA
HEX SCREW ISO 4017 M8X25	406501414	60	2	205	11 28 574 7	WP
HEX SCREW ISO 4017 M8X25	406501414	60	4	207	11 24 114 2	SUCTION UNIT AIR
HEX SCREW ISO 4017 M8X25	406501414	78	1	218	11 24 114 5	ASSEMBLY INSTAL.
HEX SCREW ISO 4017 M8X25	406501414	35	11	313	11 24 409 0	PANELLING SUPERSTR. INSTA
HEX SCREW ISO 4017 M8X25	406501414	95	2	335	11 24 483 7	MOUNTING PARTS SUPERST
HEX SCREW ISO 4017 M8X25	406501414	15	2	343	10 51 969 7	NEEDLE LUFFING WINCH
HEX SCREW ISO 4017 M8X25	406501414	26	19	402	11 27 970 6	CABIN CPL
HEX SCREW ISO 4017 M8X25	406501414	11	6	480	11 31 390 8	CENTRE PART CPL
HEX SCREW ISO 4017 M8X25	406501414	69	11	510	11 23 820 3	PIVOT PIECE CPL
HEX SCREW ISO 4017 M8X25	406501414	25	1	552	11 28 390 8	BOOM ACCESS
HEX SCREW ISO 4017 M8X25	406501414	25	1	568	11 28 583 8	BOOM ACCESS
HEX SCREW ISO 4017 M8X25	406501414	25	1	575	11 28 626 1	BOOM ACCESS
HEX SCREW ISO 4017 M8X25	406501414	22	4	618	10 51 743 9	ROPE LUG CPL RFK
HEX SCREW ISO 4017 M8X25	406501414	45	40	633	10 55 372 1	ROOF RAILING RFK
HEX SCREW ISO 4017 M8X25	406501414	33	2	699	10 58 064 7	VIDEO MONITORING SYSTEM
HEX SCREW ISO 4017 M8X30 1	4062002	64	16	22	11 29 618 6	SUPERSTRUCTURE HYDR
HEX SCREW ISO 4017 M8X30	406501314	12	2	71	11 26 557 2	MOUNTING PARTS
HEX SCREW ISO 4017 M8X30	406501314	28	2	77	10 58 163 4	CABIN SUSPENSION CPL
HEX SCREW ISO 4017 M8X30	406501314	66	2	188	11 24 113 8	MOTOR BEARING CPL
HEX SCREW ISO 4017 M8X30	406501314	63	8	195	11 24 114 0	COOLER INSTALLATION WATE
HEX SCREW ISO 4017 M8X30	406501314	61	6	202	11 24 114 1	COOLER INSTALLATION CHA
HEX SCREW ISO 4017 M8X30	406501314	82	4	218	11 24 114 5	ASSEMBLY INSTAL.
HEX SCREW ISO 4017 M8X30	406501314	96	10	335	11 24 483 7	MOUNTING PARTS SUPERST
HEX SCREW ISO 4017 M8X30	406501314	20	4	483	99 26 718 14	PEDESTAL
HEX SCREW ISO 4017 M8X30	406501314	21	10	510	11 23 820 3	PIVOT PIECE CPL
HEX SCREW ISO 4017 M8X30	406501314	34	4	593	99 48 521 14	TIP BOOM CPL
HEX SCREW ISO 4017 M8X30	406501314	21	6	618	10 51 743 9	ROPE LUG CPL RFK
HEX SCREW ISO 4017 M8X30	406501314	32	2	640	99 10 116 14	ROPE GUIDE
HEX SCREW ISO 4017 M8X30	406501314	18	2	647	10 55 601 0	FALL PROTECTION RFK
HEX SCREW ISO 4017 M8X35	406517614	62	4	202	11 24 114 1	COOLER INSTALLATION CHA
HEX SCREW ISO 4017 M8X35	406517614	97	2	335	11 24 483 7	MOUNTING PARTS SUPERST
HEX SCREW ISO 4017 M8X35	406517614	14	4	649	10 55 280 7	GRATING CPL
HEX SCREW ISO 4017 M8X35	406517614	13	2	720	10 52 155 4	REFUELLING SYSTEM RFK
HEX SCREW ISO 4017 M8X40	11932242	6	1	203	10 57 423 9	COOLER MOTOR
HEX SCREW ISO 4017 M8X40	406532914	98	1	335	11 24 483 7	MOUNTING PARTS SUPERST
HEX SCREW ISO 4017 M8X40	406532914	18	2	521	10 58 193 7	GRATING CPL
HEX SCREW ISO 4017 M8X40	406532914	27	4	581	11 28 629 9	MOUNTING PARTS
HEX SCREW ISO 4017 M8X40	406532914	61	1	653	11 30 567 0	TRANSPORT LASHING
HEX SCREW ISO 4017 M8X45	406508014	61	3	510	11 23 820 3	PIVOT PIECE CPL
HEX SCREW ISO 4017 M8X45	406508014	46	2	633	10 55 372 1	ROOF RAILING RFK
HEX SCREW ISO 4017 M8X50	10538807	36	5	313	11 24 409 0	PANELLING SUPERSTR. INSTA
HEX SCREW ISO 4017 M8X50	10538807	13	16	483	99 26 718 14	PEDESTAL
HEX SCREW ISO 4017 M8X50	10538807	54	17	510	11 23 820 3	PIVOT PIECE CPL
HEX SCREW ISO 4017 M8X50	10538807	24	3	552	11 28 390 8	BOOM ACCESS
HEX SCREW ISO 4017 M8X50	10538807	24	3	568	11 28 583 8	BOOM ACCESS
HEX SCREW ISO 4017 M8X50	10538807	24	3	575	11 28 626 1	BOOM ACCESS

Description	Item	Pos.	Quantity	Sheet	Assembly	Description
HEX SCREW ISO 4017 M8X50	10538807	11	12	635	11 24 147 8	UC PLATFORM
HEX SCREW ISO 4017 M8X50	10538807	11	16	636	11 24 575 5	PEDESTAL
HEX SCREW ISO 4017 M8X55	10331506	39	6	313	11 24 409 0	PANELLING SUPERSTR. INSTA
HEX SCREW ISO 4017 M8X55	10331506	20	19	510	11 23 820 3	PIVOT PIECE CPL
HEX SCREW ISO 4017 M8X55	10331506	13	8	523	99 34 198 14	LIEBHERR SIGN
HEX SCREW ISO 4017 M8X60	10538808	49	2	593	99 48 521 14	TIP BOOM CPL
HEX SCREW ISO 4017 M8X65	10331507	11	6	329	10 54 591 0	MOTOR COWLING
HEX SCREW ISO 4017 M8X65	10331507	10	2	376	99 29 386 14	BRACKET CPL
HEX SCREW ISO 4017 M8X65	10331507	10	2	377	99 29 434 14	BRACKET CPL
HEX SCREW ISO 4017 M8X65	10331507	13	2	553	11 28 391 3	FIXING CLAMP
HEX SCREW ISO 4017 M8X65	10331507	17	2	591	99 30 800 14	HOIST LIMIT SWITCH INSTAL.
HEX SCREW ISO 4017 M8X65	10331507	18	4	659	11 26 901 8	HOLDER CPL
HEX SCREW ISO 4017 M8X75	10541592	22	4	666	11 23 619 7	SELF-LOADING SYSTEM RFK
HEX SCREW ISO 4017 M8X80	10538809	50	2	188	11 24 113 8	MOTOR BEARING CPL
HEX SCREW ISO 4017 M8X80	10538809	64	2	195	11 24 114 0	COOLER INSTALLATION WATE
HEX SCREW ISO 4017 M8X80	10538809	60	2	212	11 24 114 4	FUEL SYSTEM
HEX SCREW ISO 4017 M8X80	10538809	13	2	551	11 28 725 5	ROPE GUARD CPL
HEX SCREW ISO 4017 M8X85	10541593	85	6	218	11 24 114 5	ASSEMBLY INSTAL.
HEX SCREW ISO 4017 M8X85	10541593	42	4	593	99 48 521 14	TIP BOOM CPL
HEX SCREW ISO 4017 M8X90	10538810	37	2	510	11 23 820 3	PIVOT PIECE CPL
HEX SCREW ISO 8676 M12X1.5	407003014	66	3	8	11 92 958 8	AIR DUCT CPL
HEX SCREW ISO 8765 M24X2	406154014	30	45	467	11 89 365 0	CRAWLER CARRIER RIGHT CP
HEX SCREW ISO 8765 M24X2	406154014	30	45	478	11 89 365 1	CRAWLER CARRIER LEFT CP
HEXALOBULAR HEAD SCREW	10138772	5	24	289	10 14 144 4	EXHAUST PIPE ASSEMBLY
HEXALOBULAR HEAD SCREW	10118912	4	10	303	10 11 892 9	FLYWHEEL ASSEMBLY
HEXALOBULAR HEAD SCREW	10125439	3	6	244	10 13 176 8	CYL HEAD ADD-ON
HEXALOBULAR HEAD SCREW	10127323	9	13	293	10 14 511 2	EXHAUST NOZZLE ATTACHM
HEXALOBULAR HEAD SCREW	10118695	3	4	291	10 14 737 0	HEAT PROTECTION W.FASTEN
HEXALOBULAR HEAD SCREW	10125702	9	2	276	10 14 967 6	CONNECTING LINE ADD-ON
HIGH PRESSURE CONNECTO	10131081	1	1	264	10 13 508 0	HIGH PRESSURE CONNECTO
HIGH PRESSURE CONNECTO	10135080	1	1	263	10 14 114 0	RK HIGH PRESSURE CONNEC
HIGH PRESSURE CONNECTO	10153151	191	6	223	12 42 545 4	DIESEL ENGINE
HIGH PRESSURE PUMP W.FA	10150857	171	1	223	12 42 545 4	DIESEL ENGINE
HIGHT FIXATION DEVICE	10556014	3	1	648	10 55 601 1	FALL PROTECTION CPL
HINGE	385204714	5	2	321	10 57 883 5	DOOR
HINGE	385204714	5	2	323	10 57 897 6	DOOR
HINGE	385204714	8	2	325	10 57 940 0	DOOR
HINGE	385204714	8	2	326	10 56 623 7	DOOR
HINGE	385204714	5	2	327	10 56 580 8	DOOR
HINGE	954560603	15	2	521	10 58 193 7	GRATING CPL
HINGE CPL	10554231	12	2	649	10 55 280 7	GRATING CPL
HIP BELT	7371746	80	1	434	10 22 506 8	OPERATOR SEAT
HOIST LIMIT SWITCH EL	971495903	29	1	593	99 48 521 14	TIP BOOM CPL
HOIST LIMIT SWITCH INSTAL.	993080014	15	2	590	99 23 398 14	ROLLER SET
HOISTING STRAP CPL	11890636	16	1	666	11 23 619 7	SELF-LOADING SYSTEM RFK
HOLDER	10041876	17	1	280	10 14 286 0	AIR COND. COMPRESSOR A
HOLDER	10138079	3	1	267	10 14 679 7	FUEL FINE-FILTER ASSEMBLY
HOLDER	10144123	11	1	305	10 15 028 8	CABLE HARNESS MOUNTING
HOLDER	10145373	2	1	294	10 14 622 4	REGULATION BOOST PRESS
HOLDER	10146405	14	1	305	10 15 028 8	CABLE HARNESS MOUNTING
HOLDER	10146836	3	1	294	10 14 622 4	REGULATION BOOST PRESS
HOLDER	10223693	33	2	313	11 24 409 0	PANELLING SUPERSTR. INSTA
HOLDER	10224272	61	2	46	11 24 519 0	SUPERSTRUCTURE EL
HOLDER	10224272	49	3	403	11 27 973 6	CABIN EL
HOLDER	10527391	1	1	700	10 57 848 6	MONITOR CABIN ADD-ON
HOLDER	10556597	12	1	195	11 24 114 0	COOLER INSTALLATION WATE
HOLDER	10575980	30	3	333	11 24 483 7	MOUNTING PARTS SUPERST
HOLDER	10579104	10	1	189	10 51 948 1	SUCTION PIPE OIL
HOLDER	10584123	47	1	315	11 24 409 0	PANELLING SUPERSTR. INSTA
HOLDER	10584124	48	1	315	11 24 409 0	PANELLING SUPERSTR. INSTA

Description	Item	Pos.	Quantity	Sheet	Assembly	Description
HOLDER	10591343	54	1	402	11 27 970 6	CABIN CPL
HOLDER	11218236	70	1	510	11 23 820 3	PIVOT PIECE CPL
HOLDER	11242757	42	1	217	11 24 114 5	ASSEMBLY INSTAL.
HOLDER	11250382	3	1	195	11 24 114 0	COOLER INSTALLATION WATE
HOLDER	11251056	8	1	202	11 24 114 1	COOLER INSTALLATION CHA
HOLDER	11262894	3	1	437	11 26 095 6	STEERING CONSOLE RIGHT
HOLDER	11271098	10	1	637	11 27 109 7	LIGHTNING ROD RFK
HOLDER	11298436	10	2	559	11 94 087 8	ASSEMBLY UNIT
HOLDER	11925182	63	1	217	11 24 114 5	ASSEMBLY INSTAL.
HOLDER	592290214	81	1	420	10 35 008 0	CABIN
HOLDER	592290314	82	1	420	10 35 008 0	CABIN
HOLDER	592290414	84	1	420	10 35 008 0	CABIN
HOLDER	954229003	101	1	335	11 24 483 7	MOUNTING PARTS SUPERST
HOLDER	969641501	50	1	357	96 96 543 01	WINCH FRAME
HOLDER CAMERA	385137114	13	1	699	10 58 064 7	VIDEO MONITORING SYSTEM
HOLDER CPL	10584210	49	1	315	11 24 409 0	PANELLING SUPERSTR. INSTA
HOLDER CPL	11269018	11	2	658	10 55 722 4	FALL PROTECTION RFK
HOLDER CPL	11309625	57	1	402	11 27 970 6	CABIN CPL
HOLDER ST.CONST.	10579806	41	1	217	11 24 114 5	ASSEMBLY INSTAL.
HOLDER ST.CONST.	11247880	14	1	207	11 24 114 2	SUCTION UNIT AIR
HOLDER ST.CONST.	11929329	20	1	5	11 93 045 7	MODIFICATION KIT RFK
HOLDING PLATE	11259704	200	1	432	11 93 934 6	AIR CONDITIONING
HOLDING PLATE	11259705	210	1	432	11 93 934 6	AIR CONDITIONING
HOLLOW SCREW	10151637	2	1	231	10 15 163 4	PISTON COOLING PRE-ASS.
HOLLOW SCREW	11443132	11	2	269	10 14 333 9	FUEL LINES
HOLLOW SCREW 10X1 9SMN	9080466	3	5	285	10 14 821 7	PIPELINE INSTALLATION
HOLLOW SCREW DIN 7643 10X	4079240	17	1	270	10 14 588 5	LEAK OIL RETURN LINE
HOLLOW SCREW DIN 7643 12X	4980741	3	4	14	11 41 475 7	ACCESSORIES AIR COMPRES
HOLLOW SCREW DIN 7643 12X	4980741	13	1	293	10 14 511 2	EXHAUST NOZZLE ATTACHM
HOLLOW SCREW DIN 7643 15	4981226	6	4	269	10 14 333 9	FUEL LINES
HOLLOW SCREW DIN 7643 15X	10129819	8	1	269	10 14 333 9	FUEL LINES
HOLLOW SCREW DIN 7643 8X	4980664	10	1	270	10 14 588 5	LEAK OIL RETURN LINE
HOLLOW SCREW DIN 7643 M1	4079160	7	1	14	11 41 475 7	ACCESSORIES AIR COMPRES
HOLLOW SCREW DIN 7643 M1	4079160	5	7	270	10 14 588 5	LEAK OIL RETURN LINE
HOLLOW SCREW DIN 7643 M1	4079160	8	1	294	10 14 622 4	REGULATION BOOST PRESS
HOLLOW SCREW R1/2"	10588723	1	1	530	59 20 224 14	LOAD HOLDING VALVE
HOOTER	614046114	81	1	403	11 27 973 6	CABIN EL
HOSE	10352453	17	1	207	11 24 114 2	SUCTION UNIT AIR
HOSE	7362451	3	2.5	507	91 76 658 14	DRAIN HOSE CPL
HOSE	886002814	68	1	218	11 24 114 5	ASSEMBLY INSTAL.
HOSE BEND	11946456	320	1	432	11 93 934 6	AIR CONDITIONING
HOSE BEND	11946458	340	1	432	11 93 934 6	AIR CONDITIONING
HOSE CLAMP	10579070	50	6	191	10 57 532 2	INTAKE PIPE OIL CPL
HOSE CLAMP	10581765	58	1	195	11 24 114 0	COOLER INSTALLATION WATE
HOSE CLAMP	10581765	50	1	217	11 24 114 5	ASSEMBLY INSTAL.
HOSE CLAMP	11005281	10	7	294	10 14 622 4	REGULATION BOOST PRESS
HOSE CLAMP	11067863	54	4	217	11 24 114 5	ASSEMBLY INSTAL.
HOSE CLAMP	11823326	39	2	217	11 24 114 5	ASSEMBLY INSTAL.
HOSE CLAMP	11833907	19	1	220	10 14 653 8	SUCTION MODUL
HOSE CLAMP	4900778	91	4	196	11 24 114 0	COOLER INSTALLATION WATE
HOSE CLAMP	4900778	11	2	274	10 14 736 9	INTAKE STACK ASSEMBLY
HOSE CLAMP	4900778	25	2	292	10 14 013 6	EXHAUST TC MOUNTING
HOSE CLAMP	4900778	2	1	507	91 76 658 14	DRAIN HOSE CPL
HOSE CLAMP	4901138	2	1	239	10 14 671 6	OIL LINE PRE-ASSEMBLY
HOSE CLAMP	4981029	8	3	239	10 14 671 6	OIL LINE PRE-ASSEMBLY
HOSE CLAMP	5004927	9	1	232	10 14 201 8	CRANKCASE BREATHER ASS
HOSE CLAMP	5004929	6	2	276	10 14 967 6	CONNECTING LINE ADD-ON
HOSE CLAMP	5700024	8	5	232	10 14 201 8	CRANKCASE BREATHER ASS
HOSE CLAMP	774204914	55	6	195	11 24 114 0	COOLER INSTALLATION WATE
HOSE CLAMP	774204914	15	1	212	11 24 114 4	FUEL SYSTEM

Description	Item	Pos.	Quantity	Sheet	Assembly	Description
HOSE CLAMP	774204914	51	14	217	11 24 114 5	ASSEMBLY INSTAL.
HOSE CLAMP	774206408	52	4	195	11 24 114 0	COOLER INSTALLATION WATE
HOSE CLAMP	774209908	31	2	207	11 24 114 2	SUCTION UNIT AIR
HOSE CLAMP	774214308	8	1	702	10 51 728 1	TUBING HYDR
HOSE CLAMP	774217108	34	1	207	11 24 114 2	SUCTION UNIT AIR
HOSE CLAMP	774218808	53	9	195	11 24 114 0	COOLER INSTALLATION WATE
HOSE CLAMP	774241914	32	1	207	11 24 114 2	SUCTION UNIT AIR
HOSE CLAMP	774247214	33	2	207	11 24 114 2	SUCTION UNIT AIR
HOSE CLAMP	774256114	52	2	191	10 57 532 2	INTAKE PIPE OIL CPL
HOSE CLAMP	790208814	51	6	191	10 57 532 2	INTAKE PIPE OIL CPL
HOSE CLAMP	790244814	12	2	11	11 92 891 3	COMPRESSOR RFK
HOSE CLAMP	790244814	53	1	217	11 24 114 5	ASSEMBLY INSTAL.
HOSE CPL	11222864	200	1	723	51 00 959 14	REFUEL PUMP
HOSE CPL	11267556	11	1	198	10 57 423 7	COOLER MOTOR
HOSE CPL	11267557	12	1	198	10 57 423 7	COOLER MOTOR
HOSE CPL	11267558	13	1	198	10 57 423 7	COOLER MOTOR
HOSE CPL	553079914	13	1	402	11 27 970 6	CABIN CPL
HOSE CPL	592007514	14	1	402	11 27 970 6	CABIN CPL
HOSE CPL	911108414	605	1	488	11 26 260 9	HOSE LIST
HOSE CPL	911256414	596	1	56	11 26 995 4	HOSE LIST
HOSE CPL	911292114	138	1	464	11 89 300 1	HOSE LIST
HOSE CPL	914757914	404	1	185	11 24 113 7	HOSE LIST
HOSE CPL	914762914	592	1	56	11 26 995 4	HOSE LIST
HOSE CPL	914763014	655	1	364	10 55 208 5	HOSE LIST
HOSE CPL	914792514	5022	1	56	11 26 995 4	HOSE LIST
HOSE CPL	914794514	575	1	55	11 26 995 4	HOSE LIST
HOSE CPL	914798914	551	1	55	11 26 995 4	HOSE LIST
HOSE CPL	918245214	572	1	186	11 24 113 7	HOSE LIST
HOSE CPL	918248414	280	1	663	11 22 970 9	HOSE LIST
HOSE CPL	918269214	430	1	186	11 24 113 7	HOSE LIST
HOSE CPL	918272514	127	1	464	11 89 300 1	HOSE LIST
HOSE CPL	918276114	113	1	463	11 89 300 1	HOSE LIST
HOSE CPL	918276114	117	1	463	11 89 300 1	HOSE LIST
HOSE CPL	918285814	598	1	56	11 26 995 4	HOSE LIST
HOSE CPL	918288114	112	1	463	11 89 300 1	HOSE LIST
HOSE CPL	918288114	116	1	463	11 89 300 1	HOSE LIST
HOSE CPL	918291914	429	1	53	11 26 995 4	HOSE LIST
HOSE CPL	918805114	707	1	88	10 54 545 1	HOSE LIST
HOSE CPL	918810914	595	1	56	11 26 995 4	HOSE LIST
HOSE CPL	918819414	380	1	394	10 56 178 0	HOSE LIST
HOSE CPL	918819614	498	1	717	11 89 549 1	HOSE LIST
HOSE CPL	918820914	162	1	465	11 89 300 1	HOSE LIST
HOSE CPL	918849914	827	1	622	10 52 439 2	HOSE LIST
HOSE CPL	918870314	903	1	534	11 22 970 6	HOSE LIST
HOSE CPL	918870914	826	1	347	99 33 241 14	HOSE LIST
HOSE CPL	918873814	556	1	55	11 26 995 4	HOSE LIST
HOSE CPL	918874514	432	1	186	11 24 113 7	HOSE LIST
HOSE CPL	918882614	824	1	347	99 33 241 14	HOSE LIST
HOSE CPL	919126414	364	1	674	99 27 747 14	HOSE LIST
HOSE CPL	919126414	365	1	674	99 27 747 14	HOSE LIST
HOSE CPL	919127514	708	1	88	10 54 545 1	HOSE LIST
HOSE CPL	919140514	533	1	54	11 26 995 4	HOSE LIST
HOSE CPL	919143414	421	1	185	11 24 113 7	HOSE LIST
HOSE CPL	919144714	181	1	679	11 24 779 0	HOSE LIST
HOSE CPL	919145114	805	1	726	11 28 825 7	HOSE LIST
HOSE CPL	919146814	543	1	54	11 26 995 4	HOSE LIST
HOSE CPL	919167714	422	1	185	11 24 113 7	HOSE LIST
HOSE CPL	919706714	527	1	54	11 26 995 4	HOSE LIST
HOSE CPL	919714914	581	1	55	11 26 995 4	HOSE LIST
HOSE CPL	919735014	524	1	54	11 26 995 4	HOSE LIST

Description	Item	Pos.	Quantity	Sheet	Assembly	Description
HOSE CPL	919736714	185	1	679	11 24 779 0	HOSE LIST
HOSE CPL	919736714	186	1	679	11 24 779 0	HOSE LIST
HOSE CPL	919757114	635	1	502	11 26 261 2	HOSE LIST
HOSE CPL	919778814	902	1	534	11 22 970 6	HOSE LIST
HOSE CPL	919791614	706	1	88	10 54 545 1	HOSE LIST
HOSE CPL	919796414	497	1	717	11 89 549 1	HOSE LIST
HOSE CPL	928003714	163	1	465	11 89 300 1	HOSE LIST
HOSE CPL	928009314	428	1	53	11 26 995 4	HOSE LIST
HOSE CPL	928010214	511	1	53	11 26 995 4	HOSE LIST
HOSE CPL	928010214	512	1	53	11 26 995 4	HOSE LIST
HOSE CPL	928010214	513	1	53	11 26 995 4	HOSE LIST
HOSE CPL	928010214	514	1	53	11 26 995 4	HOSE LIST
HOSE CPL	928014714	904	1	534	11 22 970 6	HOSE LIST
HOSE CPL	928018514	542	1	54	11 26 995 4	HOSE LIST
HOSE CPL	928020314	546	1	54	11 26 995 4	HOSE LIST
HOSE CPL	928029714	906	1	534	11 22 970 6	HOSE LIST
HOSE CPL	928029714	914	1	534	11 22 970 6	HOSE LIST
HOSE CPL	928032214	547	1	54	11 26 995 4	HOSE LIST
HOSE CPL	928044014	390	1	394	10 56 178 0	HOSE LIST
HOSE CPL	928110014	584	1	55	11 26 995 4	HOSE LIST
HOSE CPL	928113314	381	1	394	10 56 178 0	HOSE LIST
HOSE CPL	928121514	917	1	534	11 22 970 6	HOSE LIST
HOSE CPL	928123014	580	1	55	11 26 995 4	HOSE LIST
HOSE CPL	928130914	800	1	213	11 24 972 9	HOSE LIST
HOSE CPL	928130914	801	1	213	11 24 972 9	HOSE LIST
HOSE CPL	928137514	122	1	463	11 89 300 1	HOSE LIST
HOSE CPL	928137714	702	1	88	10 54 545 1	HOSE LIST
HOSE CPL	928152414	118	1	463	11 89 300 1	HOSE LIST
HOSE CPL	928166714	909	1	534	11 22 970 6	HOSE LIST
HOSE CPL	928166714	913	1	534	11 22 970 6	HOSE LIST
HOSE CPL	928169614	151	1	464	11 89 300 1	HOSE LIST
HOSE CPL	928169614	159	1	465	11 89 300 1	HOSE LIST
HOSE CPL	928183014	506	1	53	11 26 995 4	HOSE LIST
HOSE CPL	928204714	278	1	663	11 22 970 9	HOSE LIST
HOSE CPL	928209814	102	1	463	11 89 300 1	HOSE LIST
HOSE CPL	928209814	107	1	463	11 89 300 1	HOSE LIST
HOSE CPL	928265514	111	1	463	11 89 300 1	HOSE LIST
HOSE CPL	928265514	115	1	463	11 89 300 1	HOSE LIST
HOSE CPL	928266514	403	1	185	11 24 113 7	HOSE LIST
HOSE CPL	928272714	411	1	185	11 24 113 7	HOSE LIST
HOSE CPL	928318214	802	1	520	11 23 239 9	HOSE LIST
HOSE CPL	928318214	807	1	520	11 23 239 9	HOSE LIST
HOSE CPL	928326514	825	1	347	99 33 241 14	HOSE LIST
HOSE CPL	928357214	585	1	55	11 26 995 4	HOSE LIST
HOSE CPL	928443714	522	1	53	11 26 995 4	HOSE LIST
HOSE CPL	928445414	536	1	54	11 26 995 4	HOSE LIST
HOSE CPL	928456714	526	1	54	11 26 995 4	HOSE LIST
HOSE CPL	928461114	525	1	54	11 26 995 4	HOSE LIST
HOSE CPL	928536514	606	1	488	11 26 260 9	HOSE LIST
HOSE CPL	928538414	704	1	88	10 54 545 1	HOSE LIST
HOSE CPL	928538414	139	1	464	11 89 300 1	HOSE LIST
HOSE CPL	928589814	431	1	53	11 26 995 4	HOSE LIST
HOSE CPL	928591114	703	1	88	10 54 545 1	HOSE LIST
HOSE CPL	928611014	435	1	186	11 24 113 7	HOSE LIST
HOSE CPL	928619114	360	1	674	99 27 747 14	HOSE LIST
HOSE CPL	928712614	597	1	56	11 26 995 4	HOSE LIST
HOSE CPL	928757814	200	1	9	11 92 982 1	HOSE LIST
HOSE CPL	928763814	908	1	534	11 22 970 6	HOSE LIST
HOSE CPL	928763814	912	1	534	11 22 970 6	HOSE LIST
HOSE CPL	928764814	548	1	54	11 26 995 4	HOSE LIST

Description	Item	Pos.	Quantity	Sheet	Assembly	Description
HOSE CPL	928765014	508	1	53	11 26 995 4	HOSE LIST
HOSE CPL	928815314	295	1	506	91 90 239 14	CABLE HYDR
HOSE CPL	928857314	407	1	185	11 24 113 7	HOSE LIST
HOSE CPL	928861314	823	1	347	99 33 241 14	HOSE LIST
HOSE CPL	928865914	154	1	464	11 89 300 1	HOSE LIST
HOSE CPL	928865914	158	1	465	11 89 300 1	HOSE LIST
HOSE CPL	928868414	418	1	185	11 24 113 7	HOSE LIST
HOSE CPL	928872514	103	1	463	11 89 300 1	HOSE LIST
HOSE CPL	928872814	108	1	463	11 89 300 1	HOSE LIST
HOSE CPL	928880614	427	1	185	11 24 113 7	HOSE LIST
HOSE CPL	928885614	559	1	55	11 26 995 4	HOSE LIST
HOSE CPL	928950414	656	1	364	10 55 208 5	HOSE LIST
HOSE CPL	928973314	150	1	464	11 89 300 1	HOSE LIST
HOSE CPL	928973314	156	1	464	11 89 300 1	HOSE LIST
HOSE CPL	929376814	705	1	88	10 54 545 1	HOSE LIST
HOSE CPL	929399714	166	1	465	11 89 300 1	HOSE LIST
HOSE CPL	929414814	555	1	55	11 26 995 4	HOSE LIST
HOSE CPL	929443814	201	1	9	11 92 982 1	HOSE LIST
HOSE CPL	929443814	828	1	622	10 52 439 2	HOSE LIST
HOSE CPL	929467714	153	1	464	11 89 300 1	HOSE LIST
HOSE CPL	929467714	157	1	464	11 89 300 1	HOSE LIST
HOSE CPL	929473314	582	1	55	11 26 995 4	HOSE LIST
HOSE CPL	929478114	420	1	185	11 24 113 7	HOSE LIST
HOSE CPL	990038114	583	1	55	11 26 995 4	HOSE LIST
HOSE CPL	990045814	135	1	464	11 89 300 1	HOSE LIST
HOSE CPL	990045814	145	1	464	11 89 300 1	HOSE LIST
HOSE CPL	990053014	408	1	185	11 24 113 7	HOSE LIST
HOSE CPL	990055814	361	1	674	99 27 747 14	HOSE LIST
HOSE CPL	990055914	362	1	674	99 27 747 14	HOSE LIST
HOSE CPL	991109014	282	1	663	11 22 970 9	HOSE LIST
HOSE CPL	991109014	283	1	663	11 22 970 9	HOSE LIST
HOSE CPL	991139814	401	1	185	11 24 113 7	HOSE LIST
HOSE CPL	991168714	509	1	53	11 26 995 4	HOSE LIST
HOSE CPL	991170814	652	1	364	10 55 208 5	HOSE LIST
HOSE CPL	991194914	628	1	186	11 24 113 7	HOSE LIST
HOSE CPL	991195514	367	1	622	10 52 439 2	HOSE LIST
HOSE CPL	991198814	810	1	520	11 23 239 9	HOSE LIST
HOSE CPL	991198814	811	1	520	11 23 239 9	HOSE LIST
HOSE CPL	991205314	364	1	622	10 52 439 2	HOSE LIST
HOSE CPL	991209514	5020	1	56	11 26 995 4	HOSE LIST
HOSE CPL	991216914	405	1	185	11 24 113 7	HOSE LIST
HOSE CPL	991242714	915	1	534	11 22 970 6	HOSE LIST
HOSE CPL	991253814	579	1	55	11 26 995 4	HOSE LIST
HOSE CPL	991276414	136	1	464	11 89 300 1	HOSE LIST
HOSE CPL	991276414	144	1	464	11 89 300 1	HOSE LIST
HOSE CPL	991285814	918	1	534	11 22 970 6	HOSE LIST
HOSE CPL	991312114	152	1	464	11 89 300 1	HOSE LIST
HOSE CPL	991312114	155	1	464	11 89 300 1	HOSE LIST
HOSE CPL	991375814	587	1	56	11 26 995 4	HOSE LIST
HOSE CPL	991384314	388	1	394	10 56 178 0	HOSE LIST
HOSE CPL	991390514	570	1	186	11 24 113 7	HOSE LIST
HOSE CPL	991391814	602	1	488	11 26 260 9	HOSE LIST
HOSE CPL	991528514	586	1	55	11 26 995 4	HOSE LIST
HOSE CPL	991547014	419	1	185	11 24 113 7	HOSE LIST
HOSE CPL	991563114	812	1	520	11 23 239 9	HOSE LIST
HOSE CPL	991563114	817	1	520	11 23 239 9	HOSE LIST
HOSE CPL	991587514	552	1	186	11 24 113 7	HOSE LIST
HOSE CPL	991961214	137	1	464	11 89 300 1	HOSE LIST
HOSE CPL	991964414	406	1	185	11 24 113 7	HOSE LIST
HOSE CPL	992258514	569	1	55	11 26 995 4	HOSE LIST

Description	Item	Pos.	Quantity	Sheet	Assembly	Description
HOSE CPL	992261314	577	1	55	11 26 995 4	HOSE LIST
HOSE CPL	992261414	520	1	53	11 26 995 4	HOSE LIST
HOSE CPL	992273614	180	1	679	11 24 779 0	HOSE LIST
HOSE CPL	992296514	279	1	663	11 22 970 9	HOSE LIST
HOSE CPL	992298714	591	1	56	11 26 995 4	HOSE LIST
HOSE CPL	992504214	813	1	520	11 23 239 9	HOSE LIST
HOSE CPL	992511514	604	1	488	11 26 260 9	HOSE LIST
HOSE CPL	992519014	594	1	56	11 26 995 4	HOSE LIST
HOSE CPL	992552014	389	1	394	10 56 178 0	HOSE LIST
HOSE CPL	992564614	131	1	464	11 89 300 1	HOSE LIST
HOSE CPL	992564614	143	1	464	11 89 300 1	HOSE LIST
HOSE CPL	992569114	557	1	55	11 26 995 4	HOSE LIST
HOSE CPL	992835314	400	1	185	11 24 113 7	HOSE LIST
HOSE CPL	992837314	367	1	674	99 27 747 14	HOSE LIST
HOSE CPL	992857714	366	1	674	99 27 747 14	HOSE LIST
HOSE CPL	992879314	634	1	502	11 26 261 2	HOSE LIST
HOSE CPL	992890714	203	1	9	11 92 982 1	HOSE LIST
HOSE CPL	992893114	803	1	520	11 23 239 9	HOSE LIST
HOSE CPL	993204614	104	1	463	11 89 300 1	HOSE LIST
HOSE CPL	993204614	109	1	463	11 89 300 1	HOSE LIST
HOSE CPL	993213714	653	1	364	10 55 208 5	HOSE LIST
HOSE CPL	993226114	800	1	520	11 23 239 9	HOSE LIST
HOSE CPL	993226114	801	1	520	11 23 239 9	HOSE LIST
HOSE CPL	993227714	650	1	691	10 53 635 2	HOSE LIST
HOSE CPL	993623814	822	1	347	99 33 241 14	HOSE LIST
HOSE CPL	993643514	409	1	185	11 24 113 7	HOSE LIST
HOSE CPL	993657714	516	1	53	11 26 995 4	HOSE LIST
HOSE CPL	993685614	633	1	502	11 26 261 2	HOSE LIST
HOSE CPL	993694214	382	1	185	11 24 113 7	HOSE LIST
HOSE CPL	993734014	535	1	54	11 26 995 4	HOSE LIST
HOSE CPL	993751514	654	1	364	10 55 208 5	HOSE LIST
HOSE CPL	993758914	182	1	679	11 24 779 0	HOSE LIST
HOSE CPL	993758914	183	1	679	11 24 779 0	HOSE LIST
HOSE CPL	993758914	188	1	679	11 24 779 0	HOSE LIST
HOSE CPL	993758914	189	1	679	11 24 779 0	HOSE LIST
HOSE CPL	993759614	651	1	691	10 53 635 2	HOSE LIST
HOSE CPL	993774614	537	1	54	11 26 995 4	HOSE LIST
HOSE CPL	993775014	5021	1	56	11 26 995 4	HOSE LIST
HOSE CPL	994460114	545	1	54	11 26 995 4	HOSE LIST
HOSE CPL	994465914	519	1	53	11 26 995 4	HOSE LIST
HOSE CPL	994486214	900	1	534	11 22 970 6	HOSE LIST
HOSE CPL	994486214	901	1	534	11 22 970 6	HOSE LIST
HOSE CPL	994486214	910	1	534	11 22 970 6	HOSE LIST
HOSE CPL	994905314	636	1	502	11 26 261 2	HOSE LIST
HOSE CPL	995006114	578	1	55	11 26 995 4	HOSE LIST
HOSE CPL	995027514	532	1	54	11 26 995 4	HOSE LIST
HOSE CPL	995060114	521	1	53	11 26 995 4	HOSE LIST
HOSE CPL	995082614	382	1	394	10 56 178 0	HOSE LIST
HOSE CPL	995085214	133	1	464	11 89 300 1	HOSE LIST
HOSE CPL	995085214	134	1	464	11 89 300 1	HOSE LIST
HOSE CPL	995174014	905	1	534	11 22 970 6	HOSE LIST
HOSE CPL	995175314	281	1	663	11 22 970 9	HOSE LIST
HOSE CPL	995176314	538	1	54	11 26 995 4	HOSE LIST
HOSE CPL	995180714	416	1	185	11 24 113 7	HOSE LIST
HOSE CPL	995207914	540	1	54	11 26 995 4	HOSE LIST
HOSE CPL	995219914	140	1	464	11 89 300 1	HOSE LIST
HOSE CPL	995226814	184	1	679	11 24 779 0	HOSE LIST
HOSE CPL	995226814	187	1	679	11 24 779 0	HOSE LIST
HOSE CPL	995240114	167	1	465	11 89 300 1	HOSE LIST
HOSE CPL	995263914	425	1	185	11 24 113 7	HOSE LIST

Description	Item	Pos.	Quantity	Sheet	Assembly	Description
HOSE CPL	995264214	566	1	55	11 26 995 4	HOSE LIST
HOSE CPL	995285414	361	1	622	10 52 439 2	HOSE LIST
HOSE CPL	995421014	402	1	185	11 24 113 7	HOSE LIST
HOSE CPL	995437214	119	1	463	11 89 300 1	HOSE LIST
HOSE CPL	995440614	576	1	55	11 26 995 4	HOSE LIST
HOSE CPL	995512314	410	1	185	11 24 113 7	HOSE LIST
HOSE CPL	995537614	202	1	9	11 92 982 1	HOSE LIST
HOSE CPL	995830614	804	1	721	10 57 089 4	HOSE LIST
HOSE CPL	995865114	907	1	534	11 22 970 6	HOSE LIST
HOSE CPL	995865114	911	1	534	11 22 970 6	HOSE LIST
HOSE CPL	995943114	600	1	488	11 26 260 9	HOSE LIST
HOSE CPL	995943514	619	1	186	11 24 113 7	HOSE LIST
HOSE CPL	995943514	619	1	488	11 26 260 9	HOSE LIST
HOSE CPL	995943614	620	1	186	11 24 113 7	HOSE LIST
HOSE CPL	995943614	620	1	488	11 26 260 9	HOSE LIST
HOSE CPL	995943714	628	1	502	11 26 261 2	HOSE LIST
HOSE CPL	995943814	629	1	186	11 24 113 7	HOSE LIST
HOSE CPL	995943814	629	1	502	11 26 261 2	HOSE LIST
HOSE CPL	995944014	631	1	502	11 26 261 2	HOSE LIST
HOSE CPL	995944114	632	1	502	11 26 261 2	HOSE LIST
HOSE CPL	995944214	384	1	394	10 56 178 0	HOSE LIST
HOSE CPL	995944314	387	1	394	10 56 178 0	HOSE LIST
HOSE CPL	995944414	391	1	394	10 56 178 0	HOSE LIST
HOSE CPL	995951214	392	1	394	10 56 178 0	HOSE LIST
HOSE CPL	995951314	650	1	364	10 55 208 5	HOSE LIST
HOSE CPL	995951414	651	1	364	10 55 208 5	HOSE LIST
HOSE CPL	995959114	916	1	186	11 24 113 7	HOSE LIST
HOSE CPL	995961914	424	1	185	11 24 113 7	HOSE LIST
HOSE CPL	995962014	426	1	53	11 26 995 4	HOSE LIST
HOSE CPL	995972114	500	1	53	11 26 995 4	HOSE LIST
HOSE CPL	995972214	501	1	53	11 26 995 4	HOSE LIST
HOSE CPL	995972314	502	1	53	11 26 995 4	HOSE LIST
HOSE CPL	995972414	503	1	53	11 26 995 4	HOSE LIST
HOSE CPL	995972514	504	1	186	11 24 113 7	HOSE LIST
HOSE CPL	995972614	505	1	186	11 24 113 7	HOSE LIST
HOSE CPL	995972814	510	1	53	11 26 995 4	HOSE LIST
HOSE CPL	995972914	515	1	53	11 26 995 4	HOSE LIST
HOSE CPL	995973014	518	1	53	11 26 995 4	HOSE LIST
HOSE CPL	995973214	523	1	54	11 26 995 4	HOSE LIST
HOSE CPL	995973514	530	1	54	11 26 995 4	HOSE LIST
HOSE CPL	995973614	531	1	54	11 26 995 4	HOSE LIST
HOSE CPL	995973714	539	1	54	11 26 995 4	HOSE LIST
HOSE CPL	995973814	517	1	53	11 26 995 4	HOSE LIST
HOSE CPL	995974114	550	1	54	11 26 995 4	HOSE LIST
HOSE CPL	995974214	558	1	55	11 26 995 4	HOSE LIST
HOSE CPL	995974314	560	1	186	11 24 113 7	HOSE LIST
HOSE CPL	995974414	561	1	55	11 26 995 4	HOSE LIST
HOSE CPL	995974614	562	1	55	11 26 995 4	HOSE LIST
HOSE CPL	995974714	563	1	55	11 26 995 4	HOSE LIST
HOSE CPL	995974814	564	1	55	11 26 995 4	HOSE LIST
HOSE CPL	995974914	565	1	55	11 26 995 4	HOSE LIST
HOSE CPL	995976414	5023	1	56	11 26 995 4	HOSE LIST
HOSE CPL	995976414	5024	1	56	11 26 995 4	HOSE LIST
HOSE CPL	995976514	5025	1	56	11 26 995 4	HOSE LIST
HOSE CPL	995976514	5026	1	56	11 26 995 4	HOSE LIST
HOSE CPL	995991314	630	1	502	11 26 261 2	HOSE LIST
HOSE CPL	996000214	120	1	463	11 89 300 1	HOSE LIST
HOSE CPL	996026214	121	1	463	11 89 300 1	HOSE LIST
HOSE CPL	996026214	129	1	464	11 89 300 1	HOSE LIST
HOSE CPL	996026214	601	1	488	11 26 260 9	HOSE LIST

Description	Item	Pos.	Quantity	Sheet	Assembly	Description
HOSE CPL	996037814	528	1	54	11 26 995 4	HOSE LIST
HOSE CPL	996037914	529	1	54	11 26 995 4	HOSE LIST
HOSE CPL	996038114	377	1	394	10 56 178 0	HOSE LIST
HOSE CPL	996038214	383	1	394	10 56 178 0	HOSE LIST
HOSE CPL	996084314	161	1	465	11 89 300 1	HOSE LIST
HOSE CPL	996084314	164	1	465	11 89 300 1	HOSE LIST
HOSE CPL	996084614	100	1	463	11 89 300 1	HOSE LIST
HOSE CPL	996084614	105	1	463	11 89 300 1	HOSE LIST
HOSE CPL	996087014	101	1	463	11 89 300 1	HOSE LIST
HOSE CPL	996087014	106	1	463	11 89 300 1	HOSE LIST
HOSE CPL	996089814	124	1	463	11 89 300 1	HOSE LIST
HOSE CPL	996204514	123	1	463	11 89 300 1	HOSE LIST
HOSE CPL	996204614	126	1	463	11 89 300 1	HOSE LIST
HOSE CPL	996204714	141	1	464	11 89 300 1	HOSE LIST
HOSE CPL	996204814	160	1	465	11 89 300 1	HOSE LIST
HOSE CPL	996204814	165	1	465	11 89 300 1	HOSE LIST
HOSE CPL	996367614	603	1	488	11 26 260 9	HOSE LIST
HOSE CPL	996450714	130	1	464	11 89 300 1	HOSE LIST
HOSE CPL	996450714	142	1	464	11 89 300 1	HOSE LIST
HOSE CPL	996459514	412	1	185	11 24 113 7	HOSE LIST
HOSE CPL	996459714	434	1	186	11 24 113 7	HOSE LIST
HOSE CPL	996466614	507	1	53	11 26 995 4	HOSE LIST
HOSE CPL	996466814	534	1	54	11 26 995 4	HOSE LIST
HOSE CPL	996467014	567	1	55	11 26 995 4	HOSE LIST
HOSE CPL	996467114	590	1	56	11 26 995 4	HOSE LIST
HOSE CPL	996625314	820	1	347	99 33 241 14	HOSE LIST
HOSE CPL	996625414	821	1	347	99 33 241 14	HOSE LIST
HOSE CPL	996735814	413	1	185	11 24 113 7	HOSE LIST
HOSE CPL	996770614	822	1	186	11 24 113 7	HOSE LIST
HOSE CPL	996770714	823	1	221	11 26 949 8	HOSE LIST
HOSE CPL	996770814	824	1	221	11 26 949 8	HOSE LIST
HOSE CPL	996771014	826	1	221	11 26 949 8	HOSE LIST
HOSE CPL	996771114	827	1	221	11 26 949 8	HOSE LIST
HOSE CPL	996778614	541	1	54	11 26 995 4	HOSE LIST
HOSE CPL	996779514	391	1	185	11 24 113 7	HOSE LIST
HOSE CPL	996779614	392	1	185	11 24 113 7	HOSE LIST
HOSE CPL	996779714	803	1	213	11 24 972 9	HOSE LIST
HOSE CPL	996848514	415	1	53	11 26 995 4	HOSE LIST
HOSE CPL	996943814	496	1	717	11 89 549 1	HOSE LIST
HOSE CPL	996972614	132	1	464	11 89 300 1	HOSE LIST
HOSE CPL	996991514	110	1	463	11 89 300 1	HOSE LIST
HOSE CPL	996991514	114	1	463	11 89 300 1	HOSE LIST
HOSE CPL	997058014	825	1	186	11 24 113 7	HOSE LIST
HOSE FITTING	11953398	2	1	709	10 56 536 7	SOLENOID VALVE BUILT-IN KI
HOSE HOLDER HYDR.ST.CON	916183314	78	1	511	11 23 820 3	PIVOT PIECE CPL
HOSE HOLDER ST.CONST. CP	949401114	16	1	333	11 24 483 7	MOUNTING PARTS SUPERST
HOSE LINE	10144282	66	1	218	11 24 114 5	ASSEMBLY INSTAL.
HOSE LINE	10144297	67	1	218	11 24 114 5	ASSEMBLY INSTAL.
HOSE LINE	790042214	5	1	505	10 56 183 8	TOOL
HOSE LINE	790042914	6	1	505	10 56 183 8	TOOL
HOSE LIST	10524392	4	1	618	10 51 743 9	ROPE LUG CPL RFK
HOSE LIST	10536352	4	1	688	10 53 635 0	SYNCHRONIZING HYDR RFK
HOSE LIST	10545451	4	1	83	10 51 969 4	A-FRAME ERECTION CYL INST
HOSE LIST	10552085	4	1	361	10 51 968 6	LUG SUPERSTRUCTURE CPL
HOSE LIST	10561780	4	1	382	10 51 968 2	SG SUPERSTRUCTURE
HOSE LIST	10570894	4	1	720	10 52 155 4	REFUELLING SYSTEM RFK
HOSE LIST	10577909	20	1	705	11 93 621 2	AIR CONDITIONING UNIT RFK
HOSE LIST	11229706	4	1	525	11 29 259 8	TILT-BACK SUPPORT
HOSE LIST	11229709	4	1	660	10 51 971 3	SELF-LOADING SYSTEM RFK
HOSE LIST	11232399	4	1	508	11 23 820 3	PIVOT PIECE CPL

Description	Item	Pos.	Quantity	Sheet	Assembly	Description
HOSE LIST	11241137	4	1	92	11 24 048 0	CENTRAL POWER UNIT
HOSE LIST	11247790	4	1	676	11 89 568 5	SELF-LOADING SYSTEM RFK
HOSE LIST	11249729	4	1	212	11 24 114 4	FUEL SYSTEM
HOSE LIST	11262609	4	1	484	11 26 260 5	WINCH 1 CRANE
HOSE LIST	11262612	4	1	499	11 26 261 0	WINCH 2 CRANE
HOSE LIST	11269498	126	1	218	11 24 114 5	ASSEMBLY INSTAL.
HOSE LIST	11269954	4	1	18	11 24 047 9	SUPERSTRUCTURE CPL
HOSE LIST	11288257	103	1	720	10 52 155 4	REFUELLING SYSTEM RFK
HOSE LIST	11893001	4	1	443	11 89 364 8	UC CPL
HOSE LIST	11895491	4	1	713	11 31 446 2	SUCTION FLAP RFK
HOSE LIST	11929821	2	1	8	11 92 958 8	AIR DUCT CPL
HOSE LIST	992774714	4	1	666	11 23 619 7	SELF-LOADING SYSTEM RFK
HOSE LIST	993324114	4	1	343	10 51 969 7	NEEDLE LUFFING WINCH
HOSE NIPPLE	10121893	11	1	11	11 92 891 3	COMPRESSOR RFK
HOSE NIPPLE	10121893	10	1	274	10 14 736 9	INTAKE STACK ASSEMBLY
HOSE NIPPLE	10140969	5	1	287	10 14 274 4	COOLING WATER AIR BLEED
HOSE NIPPLE	10142668	1	1	287	10 14 274 4	COOLING WATER AIR BLEED
HOSE NIPPLE	9140351	26	1	292	10 14 013 6	EXHAUST TC MOUNTING
HOSE SET CPL	10527918	4	1	710	10 57 790 9	HOSE LIST
HOSE UNION	511713914	40	1	195	11 24 114 0	COOLER INSTALLATION WATE
HOSE UNION	511713914	36	3	217	11 24 114 5	ASSEMBLY INSTAL.
HOUSING	10447743	1	1	458	10 44 510 1	QUICK RELEASE FITTING
HOUSING	10447744	1	1	457	10 44 510 2	QUICK RELEASE FITTING
HOUSING	10447745	1	1	42	10 44 510 5	QUICK RELEASE FITTING
HOUSING	11239912	1	1	671	51 16 404 14	LOWERING BRAKE VALVE
HOUSING	11290844	10	1	98	11 24 682 0	DISTRIBUTOR GEARBOX
HOUSING	611039214	21	1	724	10 52 155 9	MODULE REFUELLING SYSTE
HOUSING DRILLED	918975514	21	1	51	10 56 645 8	TERMINAL BOX
HUB	10120188	7	1	256	10 13 382 3	SUCTION PUMP PRE-ASS.
HUB	11293193	6	1	457	10 44 510 2	QUICK RELEASE FITTING
HYDR POWER UNIT	11247735	2	1	92	11 24 048 0	CENTRAL POWER UNIT
HYDRAULIC HOSE	510511814	37	5	467	11 89 365 0	CRAWLER CARRIER RIGHT CP
HYDRAULIC HOSE	510511814	37	5	478	11 89 365 1	CRAWLER CARRIER LEFT CP
HYDRAULIC HOSE	510559314	43	2.5	195	11 24 114 0	COOLER INSTALLATION WATE
HYDRAULIC PARTS DRIVING G	10007947	1	1	452	10 50 351 3	DRIVING GEAR
HYDRAULIC PARTS DRIVING G	11219924	3	1	100	11 21 990 2	DRIVING GEAR
HYDRAULIC PARTS DRIVING G	11940176	1	1	389	70 23 828	DRIVING GEAR
HYDRAULIC-TYPE LUBRICAT.N	7001228	18	2	83	10 51 969 4	A-FRAME ERECTION CYL INST
HYDRAULIC-TYPE LUBRICAT.N	774301101	65	1	624	59 20 694 14	WINCH
HYDRAULIC-TYPE LUBRICAT.N	7743242	5	2	82	99 23 451 14	PIVOT BOLT INSTALLATION
HYDRAULIC-TYPE LUBRICAT.N	7743242	18	1	349	96 96 248 01	WINCH
HYDRAULIC-TYPE LUBRICAT.N	7743242	16	2	538	11 24 444 4	A-FRAME 1 CPL
HYDRAULIC-TYPE LUBRICAT.N	7743242	18	4	681	11 89 568 6	SELF-LOADING SYSTEM RFK
IGNITION STARTER SWITCH	740732003	31	1	414	11 26 095 7	CONTROL STAND RIGHT
ILLUMINATED BUTTON	606667814	12	1	411	10 53 171 8	KEYBOARD
ILLUMINATED BUTTON	606672114	10	2	411	10 53 171 8	KEYBOARD
ILLUMINATED BUTTON	606674714	11	4	411	10 53 171 8	KEYBOARD
ILLUMINATED PUSHBUTTON	693003614	31	1	724	10 52 155 9	MODULE REFUELLING SYSTE
INFORMATION SIGN	9402377	10	4	524	11 26 694 5	SIGN LOCATIONS
INJECTION LINE	10143827	2	4	271	10 14 382 8	INJECTION LINES
INJECTION LINE	10143829	1	1	271	10 14 382 8	INJECTION LINES
INJECTION LINE	10143831	4	1	271	10 14 382 8	INJECTION LINES
INJECTION LINES	10143828	215	1	224	12 42 545 4	DIESEL ENGINE
INJECTOR CPL.	10144093	13	1	217	11 24 114 5	ASSEMBLY INSTAL.
INJECTOR FASTENING	10135432	192	6	223	12 42 545 4	DIESEL ENGINE
INJECTOR WITH FASTENING	10152867	190	6	223	12 42 545 4	DIESEL ENGINE
INLET MODULE	10144034	10	1	309	11 40 371 1	SCR CPL.
INNER RING	747401901	71	1	396	90 01 376 2	SLEWING GEAR DRIVE
INNER WHEEL		20	1	352	93 88 497 01	PLANETARY GEARBOX
INNER WHEEL		55	1	352	93 88 497 01	PLANETARY GEARBOX

Description	Item	Pos.	Quantity	Sheet	Assembly	Description
INNER WHEEL	512406114	11	1	625	54 02 701 14	PLANETARY STAGE
INNER WHEEL	512406214	21	1	625	54 02 701 14	PLANETARY STAGE
INNER WHEEL	927562801	25	1	396	90 01 376 2	SLEWING GEAR DRIVE
INNER WHEEL	944378903	60	1	471	96 93 178 01	TRACTION DRIVE
INNER WHEEL	944403803	10	1	471	96 93 178 01	TRACTION DRIVE
INNER WHEEL	944406703	65	1	471	96 93 178 01	TRACTION DRIVE
INSCRIPTION	10351188	8	2	2	01 38 376 14	LR 1300 SX
INSULATING ELEMENT	10227563	79	2	406	10 55 963 5	SWITCH CABINET X1
INSULATING HOSE	603000408	17	2.3	319	11 24 409 1	COVERS
INSULATION	11892804	18	1	705	11 93 621 2	AIR CONDITIONING UNIT RFK
INTAKE PIPE	953466003	10	1	192	10 58 017 0	RETURN PIPE
INTAKE PIPE CPL	10350932	9	1	191	10 57 532 2	INTAKE PIPE OIL CPL
INTAKE PIPE CPL	10579155	11	2	191	10 57 532 2	INTAKE PIPE OIL CPL
INTAKE PIPE CPL	10598537	8	1	191	10 57 532 2	INTAKE PIPE OIL CPL
INTAKE PIPE CPL	592070414	7	1	191	10 57 532 2	INTAKE PIPE OIL CPL
INTAKE PIPE CPL	592330814	14	1	191	10 57 532 2	INTAKE PIPE OIL CPL
INTAKE PIPE CPL	916526414	13	1	191	10 57 532 2	INTAKE PIPE OIL CPL
INTAKE PIPE OIL CPL	10575322	3	1	189	10 51 948 1	SUCTION PIPE OIL
INTAKE STACK	11444998	1	1	274	10 14 736 9	INTAKE STACK ASSEMBLY
INTAKE STACK ASSEMBLY	10147369	221	1	224	12 42 545 4	DIESEL ENGINE
INTERMEDIATE FLANGE SAE	510710614	10	4	446	11 89 300 5	TUBING HYDR
INTERMEDIATE GEAR CPL.	9072906	331	1	224	12 42 545 4	DIESEL ENGINE
INTERMEDIATE GEAR PRE-AS	9072633	14	1	256	10 13 382 3	SUCTION PUMP PRE-ASS.
INTERMEDIATE GEAR PRE-AS	9072904	1	1	279	90 72 906	INTERMEDIATE GEAR CPL.
INTERMEDIATE PART	10132935	16	1	270	10 14 588 5	LEAK OIL RETURN LINE
INTERMEDIATE PART	956009714	10	1	333	11 24 483 7	MOUNTING PARTS SUPERST
INTERMEDIATE PART	956009714	35	2	510	11 23 820 3	PIVOT PIECE CPL
INTERMEDIATE PART	956009714	11	2	551	11 28 725 5	ROPE GUARD CPL
INTERMEDIATE PIECE ASSE	11245705	67	1	2	01 38 376 14	LR 1300 SX
INTERMEDIATE PIECE ASSE	11245711	71	1	2	01 38 376 14	LR 1300 SX
INTERMEDIATE PIECE ASSE	11245717	79	4	2	01 38 376 14	LR 1300 SX
INTERMEDIATE PLATE	511495814	20	1	20	11 29 618 6	SUPERSTRUCTURE HYDR
INTERMEDIATE SHAFT	944405903	70	1	471	96 93 178 01	TRACTION DRIVE
INTERMEDIATE TENSIONING	970599703	619	1	3	01 38 376 14	LR 1300 SX
INTERMEDIATE TENSIONING	992340514	616	1	3	01 38 376 14	LR 1300 SX
INTERMEDIATE TENSIONING	992342014	617	1	3	01 38 376 14	LR 1300 SX
INTERMEDIATE WHEEL AXLE	9072907	2	1	279	90 72 906	INTERMEDIATE GEAR CPL.
INTERNAL LIGHT	607147008	41	1	403	11 27 973 6	CABIN EL
INTERNAL LIGHT	607147008	41	1	406	10 55 963 5	SWITCH CABINET X1
INTERNAL MULTI-DISC	501540514	98	7	380	99 04 645 14	DRIVE
INTERNAL MULTI-DISC	503192901	9	9	355	93 95 895 01	BRAKE MULTI-DISC SET
INTERNAL MULTI-DISC	503199401	5	7	399	93 93 478 01	BRAKE MULTI-DISC SET
INTERNAL MULTI-DISC	540287614	6	7	397	50 20 383 01	MULTI-DISK BRAKE
JACK-UP SYSTEM HYDR RFK	11235246	2	1	682	11 89 568 7	SELF-LOADING SYSTEM RFK
JACK-UP SYSTEM HYDR RFK	11894080	2	1	676	11 89 568 5	SELF-LOADING SYSTEM RFK
JAW	10146415	1	1	266	10 13 543 4	PRESSURE ADAPTER FASTEN
JAW	10150144	2	1	262	10 15 315 1	HIGH PRESSURE CONNECTO
JAW	11403994	2	1	261	10 15 286 7	INJECTOR WITH FASTENING
JAW	11403994	1	1	265	10 13 543 2	INJECTOR FASTENING
KBA-RING	11351303	3	1	243	10 14 636 7	PISTON CPL.
KEY	10663954	50	2	414	11 26 095 7	CONTROL STAND RIGHT
KEY	981809914	999	1	4	01 38 376 14	LR 1300 SX
KEY COLLAR	10447258	47	1	423	10 35 007 6	SLIDING DOOR
KEY RING RD 25	704214114	20	2	319	11 24 409 1	COVERS
KEY SWITCH	10539250	71	1	46	11 24 519 0	SUPERSTRUCTURE EL
KEYBOARD	10531718	12	1	408	10 51 907 9	CONTROL STAND LEFT
KEYBOARD OPERATING PANE	10036107	11	1	408	10 51 907 9	CONTROL STAND LEFT
KEYRING PENDANT	10595399	72	1	46	11 24 519 0	SUPERSTRUCTURE EL
KNOTTED-LINK CHAIN	740000801	16	2.3	319	11 24 409 1	COVERS
L PLUG-TYPE SCREW COUPL	11922682	64	5	217	11 24 114 5	ASSEMBLY INSTAL.

Description	Item	Pos.	Quantity	Sheet	Assembly	Description
L RING JL50X2	429612001	57	1	471	96 93 178 01	TRACTION DRIVE
L-PROFILE	10581992	51	2	510	11 23 820 3	PIVOT PIECE CPL
LADDER	11237423	10	1	638	11 23 740 7	ACCESS LADDER CPL RFK
LADDER	789038114	15	1	505	10 56 183 8	TOOL
LADDER BRACKET	10584890	11	1	638	11 23 740 7	ACCESS LADDER CPL RFK
LADDER CPL	10226190	1	1	78	99 08 706 14	LADDER MOUNTING
LADDER MOUNTING	990870614	555	1	3	01 38 376 14	LR 1300 SX
LADDER MOUNTING	990870614	40	1	18	11 24 047 9	SUPERSTRUCTURE CPL
LAMP HOLDER	10537562	2	1	439	10 53 756 0	LAMP HOLDER CPL
LAMP HOLDER CPL	10537560	45	1	402	11 27 970 6	CABIN CPL
LASHING BALLAST	992980314	13	1	338	99 23 386 14	COUNTERWEIGHT ARRANGEM
LASHING STRAP	10020519	8	1	345	10 51 969 8	NEEDLE LUFFING WINCH HYD
LASHING STRAP	10020520	10	1	653	11 30 567 0	TRANSPORT LASHING
LASHING STRAP	7621780	7	1	345	10 51 969 8	NEEDLE LUFFING WINCH HYD
LASHING STRAP	7621780	14	1	659	11 26 901 8	HOLDER CPL
LASHING SUPERSTRUCTURE	991804114	13	1	441	10 51 969 6	CONNECTION SUPERSTR UC
LATCHING DEVICE CPL	7025007	23	1	435	70 24 996	SEAT FRAME
LEAD	11236713	6	1	706	11 21 750 0	LIQUEFIER
LEAD	260318602	41	10.5	516	11 90 151 1	CABLE LOOM 1 PIVOT PIECE E
LEAK OIL RETURN LINE	10145885	214	1	224	12 42 545 4	DIESEL ENGINE
LED LAMP	260514602	25	7	411	10 53 171 8	KEYBOARD
LEVEL PROBE	10517426	81	1	46	11 24 519 0	SUPERSTRUCTURE EL
LEVEL SENSOR	10134517	22	1	223	12 42 545 4	DIESEL ENGINE
LEVEL SENSOR	10528589	18	1	65	10 56 073 3	FUEL TANK CPL
LEVEL SENSOR	10529210	14	1	60	10 56 070 1	TANK HYDR CPL
LEVEL SENSOR	11088130	1	1	238	10 13 451 7	LEVEL SENSOR
LEVER	10447749	5	1	42	10 44 510 5	QUICK RELEASE FITTING
LEVER	10447749	5	1	457	10 44 510 2	QUICK RELEASE FITTING
LEVER	10447749	5	1	458	10 44 510 1	QUICK RELEASE FITTING
LEVER	11909498	160	1	432	11 93 934 6	AIR CONDITIONING
LEVER ST.CONST.	992751514	18	2	660	10 51 971 3	SELF-LOADING SYSTEM RFK
LEVER TYPE HAND GREASE	10445635	13	1	70	11 27 315 5	CENTRAL GREASING
LID CPL	10501620	1	1	44	55 09 453 14	OIL MOTOR
LID CPL	10548543	35	1	20	11 29 618 6	SUPERSTRUCTURE HYDR
LID CPL	10551191	21	2	446	11 89 300 5	TUBING HYDR
LID PLATE	5005525	41	4	480	11 31 390 8	CENTRE PART CPL
LID PLATE	602016514	73	4	511	11 23 820 3	PIVOT PIECE CPL
LID PLATE	602025814	93	3	196	11 24 114 0	COOLER INSTALLATION WATE
LID PLATE	602026414	48	3	467	11 89 365 0	CRAWLER CARRIER RIGHT CP
LID PLATE	602026414	48	3	478	11 89 365 1	CRAWLER CARRIER LEFT CP
LID PLATE	7005053	56	1	8	11 92 958 8	AIR DUCT CPL
LID PLATE	7005053	92	3	196	11 24 114 0	COOLER INSTALLATION WATE
LID PLATE	7005053	39	2	480	11 31 390 8	CENTRE PART CPL
LID PLATE	7008583	40	2	480	11 31 390 8	CENTRE PART CPL
LIEBHERR SIGN	993419814	80	2	511	11 23 820 3	PIVOT PIECE CPL
LIFETIME SEAL	10352364	150	1	685	59 21 826 14	SUPPORT CYLINDER
LIFETIME SEAL	10352365	155	1	685	59 21 826 14	SUPPORT CYLINDER
LIFETIME SEAL	11253456	7	7	450	11 89 617 8	SEALING SET
LIGHT BULB	607021114	15	1	48	70 27 205	WORK LIGHT
LIGHT BULB	607021714	1	1	49	10 22 450 0	WORK LIGHT
LIGHT BULB	607021714	42	1	403	11 27 973 6	CABIN EL
LIGHT BULB	607021714	42	1	406	10 55 963 5	SWITCH CABINET X1
LIGHT BULB	607023214	43	1	403	11 27 973 6	CABIN EL
LIGHT BULB	607023214	43	1	406	10 55 963 5	SWITCH CABINET X1
LIGHTNING ROD RFK	11271097	580	1	3	01 38 376 14	LR 1300 SX
LIMIT SENSOR	606655108	43	1	45	11 24 519 0	SUPERSTRUCTURE EL
LIMIT STOP	10539631	45	2	467	11 89 365 0	CRAWLER CARRIER RIGHT CP
LIMIT STOP	10539631	45	2	478	11 89 365 1	CRAWLER CARRIER LEFT CP
LIMIT STOP	10566932	14	2	650	11 29 473 7	GANGWAY INTERM. SECTION
LIMIT STOP	10566932	15	2	654	11 29 474 2	GANGWAY INTERM. SECTION

Description	Item	Pos.	Quantity	Sheet	Assembly	Description
LIMIT STOP	10566932	17	2	655	11 29 474 3	GANGWAY INTERM. SECTION
LIMIT STOP	10566932	14	2	657	10 55 514 8	FALL PROTECTION RFK
LIMIT STOP	11913115	2	1	110	11 06 730 5	SHUTTLE VALVE
LIMIT STOP	990443514	8	2	321	10 57 883 5	DOOR
LIMIT STOP	990443514	8	2	323	10 57 897 6	DOOR
LIMIT STOP	990443514	3	2	325	10 57 940 0	DOOR
LIMIT STOP	990443514	3	2	326	10 56 623 7	DOOR
LIMIT STOP	990443514	8	2	327	10 56 580 8	DOOR
LIMIT STOP BUFFER	592291314	108	1	420	10 35 008 0	CABIN
LIMIT STOP PLATE	958908914	17	1	521	10 58 193 7	GRATING CPL
LIMIT STOP SCREW M12X38 42	9885661	17	2	117	10 11 835 0	CONNECTION HOUSING
LIMIT SWITCH	11921102	17	1	61	10 52 673 3	SHUT OFF DEVICE
LIMIT SWITCH HOISTING ABOV	927521808	36	1	595	97 14 959 03	HOIST LIMIT SWITCH EL
LIMIT SWITCH INSTALLATION	11310932	46	1	18	11 24 047 9	SUPERSTRUCTURE CPL
LIMMIT DISK	938850201	5	1	350	93 88 500 01	ROPE DRUM
LIQUEFIER	11217500	11	1	705	11 93 621 2	AIR CONDITIONING UNIT RFK
LOAD HOLDING VALVE	592022414	3	2	528	10 51 959 1	TUBING HYDR
LOAD HOOK	790386214	129	1	3	01 38 376 14	LR 1300 SX
LOCK NUT DIN 985	11219056	6	2	214	10 55 091 1	ADD-ON PRELIMINARY FUEL F
LOCK WASHER 10.5/16X2 VS1		53	12	352	93 88 497 01	PLANETARY GEARBOX
LOCK WASHER 10.5/16X2 VS1	4229913	27	2	357	96 96 543 01	WINCH FRAME
LOCK WASHER 10.5/16X2 VS1	4229913	75	12	396	90 01 376 2	SLEWING GEAR DRIVE
LOCK WASHER 12X13X18X2.1	4900093	52	4	357	96 96 543 01	WINCH FRAME
LOCK WASHER 12X13X18X2.1	4900093	27	8	396	90 01 376 2	SLEWING GEAR DRIVE
LOCK WASHER 16X17X24X2.6	423911601	32	10	350	93 88 500 01	ROPE DRUM
LOCK WASHER 16X17X24X2.6	423911601	8	8	357	96 96 543 01	WINCH FRAME
LOCK WASHER 17X24X2.6	4239009	24	8	115	10 11 834 9	DOUBLE V-PUMP
LOCK WASHER 20X21X30X2.8	423912001	69	12	471	96 93 178 01	TRACTION DRIVE
LOCKABLE TANK CAP	11101351	5	1	219	11 24 240 8	UREA CONTAINER
LOCKABLE TANK CAP	7365412	11	1	65	10 56 073 3	FUEL TANK CPL
LOCKABLE TANK CAP	7401726	5	1	398	92 76 934 01	OIL FILLER NECK
LOCKING	10572075	36	1	421	10 22 645 4	DOOR ACCESSORIES
LOCKING BAR	10351784	14	1	321	10 57 883 5	DOOR
LOCKING BAR	10351784	14	1	323	10 57 897 6	DOOR
LOCKING BAR	10351784	14	1	325	10 57 940 0	DOOR
LOCKING BAR	10351784	14	1	326	10 56 623 7	DOOR
LOCKING BAR	10351784	16	1	327	10 56 580 8	DOOR
LOCKING DEVICE	10227128	7	1	519	61 61 541 14	CABLE DRUM
LOCKING DEVICE	919617914	1	2	582	11 28 610 5	RETAINING DEVICE CPL
LOCKING PIECES	10115664	452	1	224	12 42 545 4	DIESEL ENGINE
LOCKING PIECES	10116110	521	1	224	12 42 545 4	DIESEL ENGINE
LOCKING PIECES	10119128	522	1	225	12 42 545 4	DIESEL ENGINE
LOCKING PIECES	10127979	526	1	225	12 42 545 4	DIESEL ENGINE
LOCKING PIECES	10128439	524	1	225	12 42 545 4	DIESEL ENGINE
LOCKING PIECES	10128440	1	1	301	10 12 843 9	LOCKING PIECES
LOCKING PIECES	10142747	630	1	225	12 42 545 4	DIESEL ENGINE
LOCKING PIECES	10143304	15	1	288	10 14 601 2	MANIFOLD FOR WATER CPL.
LOCKING PIECES	10144027	652	1	225	12 42 545 4	DIESEL ENGINE
LOCKING PIECES	10146374	656	1	225	12 42 545 4	DIESEL ENGINE
LOCKING PIECES	9078249	650	1	225	12 42 545 4	DIESEL ENGINE
LOCKING PIECES	9078301	654	1	225	12 42 545 4	DIESEL ENGINE
LOCKING PLATE	11942341	21	2	535	11 27 536 5	TILT-BACK SUPPORTS INSTAL
LOCKING PLATE	959912714	17	6	341	99 29 803 14	LASHING BALLAST
LOCKING RING	10216718	7	1	391	11 94 017 7	DRIVING SHAFT
LOCKING RING	10573893	3	2	602	10 50 435 2	ROPE PULLEY
LOCKING RING	10598700	9	1	451	51 24 059 14	VARIABLE DISPLACEMENT MO
LOCKING RING	11214714	7	1	452	10 50 351 3	DRIVING GEAR
LOCKING RING 10	10447016	7	6	541	99 14 137 14	DEFLECTION PULLEY CPL
LOCKING RING 10	10447016	23	12	618	10 51 743 9	ROPE LUG CPL RFK
LOCKING RING 4	10507964	56	12	51	10 56 645 8	TERMINAL BOX

Description	Item	Pos.	Quantity	Sheet	Assembly	Description
LOCKING RING 8	10447017	10	4	415	91 65 251 14	CABLE DUCT CABINET 1
LOCKING RING 8	10447017	38	2	593	99 48 521 14	TIP BOOM CPL
LOCKING RING 8	10447017	20	10	618	10 51 743 9	ROPE LUG CPL RFK
LOCKING RING 8 A2	10558857	45	2	510	11 23 820 3	PIVOT PIECE CPL
LOCKING RING 8 A2	10558857	12	2	551	11 28 725 5	ROPE GUARD CPL
LOCKING RING AEHNL.DIN 98	10220937	25	1	168	11 22 127 4	PUMP ELEMENT
LOCKING RING DIN 471	10171594	29	3	471	96 93 178 01	TRACTION DRIVE
LOCKING RING DIN 471	10424724	2	1	392	10 65 027 0	CLOSING RING
LOCKING RING DIN 471 100X4	428011901	19	5	471	96 93 178 01	TRACTION DRIVE
LOCKING RING DIN 471 12X1	4280008	31	4	117	10 11 835 0	CONNECTION HOUSING
LOCKING RING DIN 471 14X1 F	11293196	8	1	457	10 44 510 2	QUICK RELEASE FITTING
LOCKING RING DIN 471 17X1	428001014	45	1	627	54 02 703 14	FLANGE CPL
LOCKING RING DIN 471 20X1.2	428001414	6	1	540	91 90 584 14	ANGLE INDICATION
LOCKING RING DIN 471 25X1.2	4280020	3	3	519	61 61 541 14	CABLE DRUM
LOCKING RING DIN 471 28X2		43	3	352	93 88 497 01	PLANETARY GEARBOX
LOCKING RING DIN 471 28X2	4630001	56	3	396	90 01 376 2	SLEWING GEAR DRIVE
LOCKING RING DIN 471 34X1.5	428011301	7	2	246	11 44 800 5	ROCKER ARM BRACKET PRE
LOCKING RING DIN 471 35X1.5	428002914	13	1	629	54 02 705 14	DRIVE UNIT CPL
LOCKING RING DIN 471 40X2.5		33	3	352	93 88 497 01	PLANETARY GEARBOX
LOCKING RING DIN 471 40X2.5	428003314	41	3	396	90 01 376 2	SLEWING GEAR DRIVE
LOCKING RING DIN 471 45X1.7	10171583	49	3	471	96 93 178 01	TRACTION DRIVE
LOCKING RING DIN 471 45X1.7	4280032	41	2	148	10 13 802 7	REPAIR KIT SHAFT
LOCKING RING DIN 471 45X2.5	4000870	21	5	396	90 01 376 2	SLEWING GEAR DRIVE
LOCKING RING DIN 471 50X2	10171585	72	1	396	90 01 376 2	SLEWING GEAR DRIVE
LOCKING RING DIN 471 50X2	4280034	41	1	135	98 84 402	REPAIR KIT SHAFT
LOCKING RING DIN 471 55X2	428004514	30	1	628	54 02 704 14	POWER TAKE-OFF CPL
LOCKING RING DIN 471 55X3		8	5	352	93 88 497 01	PLANETARY GEARBOX
LOCKING RING DIN 471 55X3	400093303	39	3	471	96 93 178 01	TRACTION DRIVE
LOCKING RING DIN 471 A100X	10530197	360	8	98	11 24 682 0	DISTRIBUTOR GEARBOX
LOCKING RING DIN 471 A125X	485529714	370	2	98	11 24 682 0	DISTRIBUTOR GEARBOX
LOCKING RING DIN 472 100X4	428104201	7	1	474	94 44 065 03	PLANET WHEEL
LOCKING RING DIN 472 110X4	10171636	73	1	471	96 93 178 01	TRACTION DRIVE
LOCKING RING DIN 472 130X4	10171639	7	1	473	94 44 048 03	PLANET WHEEL
LOCKING RING DIN 472 23X1.2	428107714	21	1	629	54 02 705 14	DRIVE UNIT CPL
LOCKING RING DIN 472 35X1.5	428100914	46	1	627	54 02 703 14	FLANGE CPL
LOCKING RING DIN 472 46X1.7	428107101	76	1	471	96 93 178 01	TRACTION DRIVE
LOCKING RING DIN 472 62X2	4281037	14	1	629	54 02 705 14	DRIVE UNIT CPL
LOCKING RING DIN 472 80X2.5	4281013	4	1	627	54 02 703 14	FLANGE CPL
LOCKING RING DIN 472 85X3		4	1	352	93 88 497 01	PLANETARY GEARBOX
LOCKING RING DIN 472 90X3	10171632	67	1	396	90 01 376 2	SLEWING GEAR DRIVE
LOCKING RING DIN 472 90X3	10171632	7	1	472	94 44 043 03	PLANET WHEEL
LOCKING RING DIN 472 90X3	4281016	31	1	628	54 02 704 14	POWER TAKE-OFF CPL
LOCKING RING DIN 472 95X3	4281017	40	1	148	10 13 802 7	REPAIR KIT SHAFT
LOCKING RING DIN 472 95X3	4281017	40	1	156	10 13 803 2	REPAIR KIT LOCK RING
LOCKING RING DIN 472 J56X2	11268816	380	2	98	11 24 682 0	DISTRIBUTOR GEARBOX
LOCKING RING DIN 984 35X1.5	10008092	25	1	177	11 21 593 6	PUMP ELEMENT
LOCKING SET	11219369	4	1	104	11 21 991 0	PUMP HOUSING
LOUDSPEAKER	10350334	71	2	403	11 27 973 6	CABIN EL
LOWERING BRAKE VALVE	10226750	2	2	661	10 51 971 2	SELF-LOADING SYSTEM HYD
LOWERING BRAKE VALVE	11239880	2	1	671	51 16 404 14	LOWERING BRAKE VALVE
LOWERING BRAKE VALVE	11239880	2	1	673	59 21 584 14	LOWERING BRAKE VALVE
LOWERING BRAKE VALVE	11300790	160	1	685	59 21 826 14	SUPPORT CYLINDER
LOWERING BRAKE VALVE	511640414	3	1	668	10 51 973 8	SELF-LOADING SYSTEM HYD
LOWERING BRAKE VALVE	592158414	4	1	668	10 51 973 8	SELF-LOADING SYSTEM HYD
LUBE OIL FILTER ASSEMBLY	10142942	150	1	223	12 42 545 4	DIESEL ENGINE
LUBRICATING OIL LINE	10140137	7	1	292	10 14 013 6	EXHAUST TC MOUNTING
LUBRICATING OIL PUMP	10133945	140	1	223	12 42 545 4	DIESEL ENGINE
LUBRICATING OIL PUMP	10138565	1	1	254	10 13 394 5	LUBRICATING OIL PUMP
LUBRICATING OIL PUMP	592178914	580	1	98	11 24 682 0	DISTRIBUTOR GEARBOX
LUG SHEAVE SET	992925814	11	1	361	10 51 968 6	LUG SUPERSTRUCTURE CPL

Description	Item	Pos.	Quantity	Sheet	Assembly	Description
LUG SUPERSTRUCTURE CPL	10519686	1	1	359	10 51 969 1	LUG SUPERSTRUCTURE CPL
LUG SUPERSTRUCTURE CPL	10519691	25	1	2	01 38 376 14	LR 1300 SX
LUMINOUS PUSH BUTTON CO	6204372	20	2	411	10 53 171 8	KEYBOARD
LUMINOUS SWITCH CONTACT	6001593	21	5	411	10 53 171 8	KEYBOARD
MAGNET COIL	10215806	1	2	531	51 04 292 14	DIRECTIONAL CONTROL VALV
MAGNET COIL	11229186	1	2	37	10 59 143 5	DIRECTIONAL CONTROL VALV
MAGNET COIL	693208614	1	2	36	11 22 918 4	DIRECTIONAL CONTROL VALV
MAIN JET SOLEX 0.8MM	714001914	38	2	20	11 29 618 6	SUPERSTRUCTURE HYDR
MAIN JET SOLEX 0.8MM	714001914	5	1	702	10 51 728 1	TUBING HYDR
MAIN JET SOLEX 1.2MM	714002114	7	1	620	10 51 726 2	TUBING HYDR
MAIN JET SOLEX 1MM	714001514	12	1	8	11 92 958 8	AIR DUCT CPL
MAIN LUG HYDR	10519687	2	1	361	10 51 968 6	LUG SUPERSTRUCTURE CPL
MAINTENANCE SWITCH	11060522	20	1	207	11 24 114 2	SUCTION UNIT AIR
MALE INSERT	605604714	33	1	516	11 90 151 1	CABLE LOOM 1 PIVOT PIECE E
MALE INSERT	605604714	31	1	595	97 14 959 03	HOIST LIMIT SWITCH EL
MALE INSERT	605611814	43	1	516	11 90 151 1	CABLE LOOM 1 PIVOT PIECE E
MANIFOLD FOR WATER CPL.	10146012	388	1	224	12 42 545 4	DIESEL ENGINE
MANUAL VENTILATION PUMP	10129218	4	1	214	10 55 091 1	ADD-ON PRELIMINARY FUEL F
MASTER SWITCH	11214818	10	1	408	10 51 907 9	CONTROL STAND LEFT
MASTER SWITCH	11214820	10	1	337	10 51 127 4	DOUBLE T-MASTER SWITCH
MEASURING HOSE	7002475	11	2	505	10 56 183 8	TOOL
MIRROR	592290814	8	1	428	59 22 905 14	MIRROR + SUNN VISOR
MIRROR + SUNN VISOR	592290514	85	1	420	10 35 008 0	CABIN
MIXER	10144086	5	1	308	11 90 032 5	EXHAUST GAS SYSTEM
MODEM CPL RFK	11223226	10	1	613	11 90 722 6	MODEM RFK
MODEM RFK	11907226	438	1	3	01 38 376 14	LR 1300 SX
MODIFICATION EL RFK	11931926	60	1	5	11 93 045 7	MODIFICATION KIT RFK
MODIFICATION KIT RFK	11930457	4	1	2	01 38 376 14	LR 1300 SX
MODULE ASSEMBLY GROUP	916793914	1	2	81	10 56 069 4	MODULES INSTALLATION
MODULE REFUELLING SYSTE	10521559	11	1	720	10 52 155 4	REFUELLING SYSTEM RFK
MODULES INSTALLATION	10560694	49	1	18	11 24 047 9	SUPERSTRUCTURE CPL
MOISTURE SENSOR	10141261	15	1	217	11 24 114 5	ASSEMBLY INSTAL.
MONITOR CABIN ADD-ON	10578486	10	1	699	10 58 064 7	VIDEO MONITORING SYSTEM
MONITOR LCD	11240503	1	1	696	10 53 352 4	CABIN EL
MONITOR LCD CPL	11260077	24	1	414	11 26 095 7	CONTROL STAND RIGHT
MONITOR SCREEN HOUSING	11262812	2	1	437	11 26 095 6	STEERING CONSOLE RIGHT
MOTOR	592293214	52	1	432	11 93 934 6	AIR CONDITIONING
MOTOR	592293214	60	1	433	10 58 467 1	WATER VALVE
MOTOR BEARING CPL	11241138	12	1	92	11 24 048 0	CENTRAL POWER UNIT
MOTOR CONTROL DEVICE	10883842	1	1	304	12 42 558 9	MOTOR CONTROL DEVICE
MOTOR CONTROL DEVICE	12425589	570	1	225	12 42 545 4	DIESEL ENGINE
MOTOR COWLING	10545910	2	1	313	11 24 409 0	PANELLING SUPERSTR. INSTA
MOTOR FLANGE		75	1	352	93 88 497 01	PLANETARY GEARBOX
MOTOR FLANGE	540273014	7	1	629	54 02 705 14	DRIVE UNIT CPL
MOTOR FLANGE	927564101	85	1	396	90 01 376 2	SLEWING GEAR DRIVE
MOTOR HOLDER	11267559	26	1	198	10 57 423 7	COOLER MOTOR
MOUNTING BRACKET	10578343	33	1	77	10 58 163 4	CABIN SUSPENSION CPL
MOUNTING LINK CPL	993560614	26	4	660	10 51 971 3	SELF-LOADING SYSTEM RFK
MOUNTING LINK LEFT CPL	11235361	11	1	83	10 51 969 4	A-FRAME ERECTION CYL INST
MOUNTING LINK RIGHT CPL	11235382	21	1	83	10 51 969 4	A-FRAME ERECTION CYL INST
MOUNTING LINK ST. CONST.	992982314	14	6	341	99 29 803 14	LASHING BALLAST
MOUNTING PARTS	10526560	11	1	338	99 23 386 14	COUNTERWEIGHT ARRANGEM
MOUNTING PARTS	11265572	11	1	70	11 27 315 5	CENTRAL GREASING
MOUNTING PARTS	11283576	2	1	583	99 06 461 14	ANEMOMETER CPL
MOUNTING PARTS	11286299	11	1	578	11 24 132 4	BOOM HEAD CPL
MOUNTING PARTS SUPERST	11244837	14	1	90	11 26 560 6	AGGREGATE DIESEL ENGINE
MOUNTING SHEET	10149477	2	1	295	10 14 584 5	GENERATOR, PRE-ASSEMBLE
MOUNTING TOOL	11949368	80	1	505	10 56 183 8	TOOL
MULTI-DISC CARRIER		65	1	352	93 88 497 01	PLANETARY GEARBOX
MULTI-DISC CARRIER	501559414	96	1	380	99 04 645 14	DRIVE

Description	Item	Pos.	Quantity	Sheet	Assembly	Description
MULTI-DISC CARRIER	927564001	70	1	396	90 01 376 2	SLEWING GEAR DRIVE
MULTI-DISC CARRIER	944406203	75	1	471	96 93 178 01	TRACTION DRIVE
MULTI-DISK BRAKE	502038301	80	1	396	90 01 376 2	SLEWING GEAR DRIVE
MUSHROOM BUTTON	592289914	73	1	420	10 35 008 0	CABIN
NAMEPLATE ACCIDENT PRE	11461533	42	1	45	11 24 519 0	SUPERSTRUCTURE EL
NAMEPLATE CONTROL PLATE	10549547	51	1	402	11 27 970 6	CABIN CPL
NAMEPLATE CONTROL PLATE	10549800	52	1	402	11 27 970 6	CABIN CPL
NAMEPLATE UVV	773195614	460	2	343	10 51 969 7	NEEDLE LUFFING WINCH
NAMEPLATE UVV	773195614	460	2	618	10 51 743 9	ROPE LUG CPL RFK
NEEDLE CAGE	747462814	20	1	628	54 02 704 14	POWER TAKE-OFF CPL
NEEDLE LUFFING WINCH	10519697	23	1	2	01 38 376 14	LR 1300 SX
NEEDLE LUFFING WINCH HYD	10519698	2	1	343	10 51 969 7	NEEDLE LUFFING WINCH
NEEDLES	540244214	14	72	625	54 02 701 14	PLANETARY STAGE
NEEDLES	540271114	24	48	625	54 02 701 14	PLANETARY STAGE
NON-RETURN VALVE	10099055	12	2	446	11 89 300 5	TUBING HYDR
NON-RETURN VALVE	10119971	9	1	239	10 14 671 6	OIL LINE PRE-ASSEMBLY
NON-RETURN VALVE	10352371	170	1	685	59 21 826 14	SUPPORT CYLINDER
NON-RETURN VALVE	11229182	4	1	34	10 35 148 6	VALVE BLOCK
NON-RETURN VALVE	11233729	3	2	87	10 22 540 8	VALVE BLOCK
NON-RETURN VALVE	11233742	9	1	87	10 22 540 8	VALVE BLOCK
NON-RETURN VALVE	11233749	10	1	87	10 22 540 8	VALVE BLOCK
NON-RETURN VALVE	11233751	11	1	87	10 22 540 8	VALVE BLOCK
NON-RETURN VALVE	11270155	3	1	530	59 20 224 14	LOAD HOLDING VALVE
NON-RETURN VALVE	11835950	181	4	30	11 28 647 6	VALVE BLOCK
NON-RETURN VALVE	510411614	10	1	528	10 51 959 1	TUBING HYDR
NON-RETURN VALVE	510493714	4	1	486	11 26 260 6	WINCH 1 HYDR
NON-RETURN VALVE	510493714	4	1	501	11 26 261 1	WINCH 2 HYDR
NON-RETURN VALVE	511419314	22	1	94	11 24 773 5	HYDR POWER UNIT
NON-RETURN VALVE	511458114	16	4	446	11 89 300 5	TUBING HYDR
NON-RETURN VALVE	511458814	5	1	486	11 26 260 6	WINCH 1 HYDR
NON-RETURN VALVE	511458814	5	1	501	11 26 261 1	WINCH 2 HYDR
NON-RETURN VALVE	511607214	31	1	20	11 29 618 6	SUPERSTRUCTURE HYDR
NON-RETURN VALVE	511631514	41	1	20	11 29 618 6	SUPERSTRUCTURE HYDR
NON-RETURN VALVE	592044714	33	1	20	11 29 618 6	SUPERSTRUCTURE HYDR
NON-RETURN VALVE	592052914	29	1	723	51 00 959 14	REFUEL PUMP
NON-RETURN VALVE	592071014	230	1	30	11 28 647 6	VALVE BLOCK
NOTCHED SLEEVE	540272314	33	1	627	54 02 703 14	FLANGE CPL
NOZZLE	11226142	200	1	387	51 14 347 14	SG SAFETY BLOCK
NOZZLE	11233732	7	1	87	10 22 540 8	VALVE BLOCK
NOZZLE	11239895	3	1	673	59 21 584 14	LOWERING BRAKE VALVE
NOZZLE	11249191	270	1	86	59 21 041 14	DOUBLE-ACTING CYL
NOZZLE	7014257	271	1	30	11 28 647 6	VALVE BLOCK
NOZZLE	7026135	269	2	30	11 28 647 6	VALVE BLOCK
NOZZLE HOLDER	592289414	53	1	419	10 35 008 0	CABIN
NUT LWN 8-60-106 M33 10	412705014	12	80	441	10 51 969 6	CONNECTION SUPERSTR UC
NUT M18X1.5 9SMNPB28K	9278873	11	1	125	92 78 875	PRESSURE CUT-OFF
NUT M22X1.5 11SMNPB30+C;E	9072969	13	1	160	10 12 226 5	SEAL KIT REGULATING VALVE
NUT M24X1 9SMNPB28K	9077401	28	1	160	10 12 226 5	SEAL KIT REGULATING VALVE
O-RING		13	1	352	93 88 497 01	PLANETARY GEARBOX
O-RING		19	2	352	93 88 497 01	PLANETARY GEARBOX
O-RING		22	1	352	93 88 497 01	PLANETARY GEARBOX
O-RING		51	1	352	93 88 497 01	PLANETARY GEARBOX
O-RING		61	1	352	93 88 497 01	PLANETARY GEARBOX
O-RING		73	1	352	93 88 497 01	PLANETARY GEARBOX
O-RING		76	1	352	93 88 497 01	PLANETARY GEARBOX
O-RING		78	8	352	93 88 497 01	PLANETARY GEARBOX
O-RING	10002167	4	2	284	10 14 821 5	THERMOSTAT HOUSING ASS
O-RING	10002309	24	1	145	10 12 224 8	RK ADDITIONAL PARTS
O-RING	10002309	24	1	158	10 13 803 3	SEAL KIT CPL.
O-RING	10002310	3	1	12	11 41 737 0	AIR COMPRESSOR

Description	Item	Pos.	Quantity	Sheet	Assembly	Description
O-RING	10004261	9	1	228	10 14 768 6	POWER UNIT SUPPORT ATT
O-RING	10016874	17	2	157	10 12 226 2	REGULATION REPAIR KIT
O-RING	10016947	28	2	159	10 13 803 4	GASKET KIT INT.FLANGE
O-RING	10097551	4	1	111	11 26 744 7	SHUTTLE VALVE
O-RING	10115240	27	1	455	11 22 473 8	ADJUSTMENT
O-RING	10116255	1	1	278	10 29 998 8	HEATING FLANGE PRE.ASS.
O-RING	10128559	2	1	260	10 15 278 7	SEAL KIT HIGH PRESSURE P
O-RING	10128671	1	1	260	10 15 278 7	SEAL KIT HIGH PRESSURE P
O-RING	10128678	3	1	260	10 15 278 7	SEAL KIT HIGH PRESSURE P
O-RING	10130757	2	1	264	10 13 508 0	HIGH PRESSURE CONNECTO
O-RING	10217777	2	1	301	10 12 843 9	LOCKING PIECES
O-RING	10218370	2	1	297	11 38 664 5	STARTER
O-RING	10218953	3	1	62	10 51 572 4	RETURN FILTER
O-RING	10225991	10	1	182	51 14 145 14	PRESSURE LIMITING VALVE
O-RING	10282774	4	2	227	10 15 445 8	CYLINDER
O-RING	10340226	20	2	215	10 30 300 7	FUEL PREFILTER
O-RING	10350604	2	1	183	10 22 358 1	PRESSURE FILTER
O-RING	10351605	22	1	168	11 22 127 4	PUMP ELEMENT
O-RING	10351605	22	1	174	10 35 161 0	SEALING SET CPL
O-RING	10351608	23	4	168	11 22 127 4	PUMP ELEMENT
O-RING	10351608	23	4	174	10 35 161 0	SEALING SET CPL
O-RING	10352356	105	3	685	59 21 826 14	SUPPORT CYLINDER
O-RING	10352361	135	1	685	59 21 826 14	SUPPORT CYLINDER
O-RING	10352362	145	1	685	59 21 826 14	SUPPORT CYLINDER
O-RING	10548553	59	1	380	99 04 645 14	DRIVE
O-RING	10593504	320	2	98	11 24 682 0	DISTRIBUTOR GEARBOX
O-RING	10802833	22	1	177	11 21 593 6	PUMP ELEMENT
O-RING	11008055	3	1	274	10 14 736 9	INTAKE STACK ASSEMBLY
O-RING	11066168	4	1	254	10 13 394 5	LUBRICATING OIL PUMP
O-RING	11212730	10	1	109	11 06 730 4	SHUTDOWN VALVE
O-RING	11215707	23	4	177	11 21 593 6	PUMP ELEMENT
O-RING	11219374	8	1	112	11 21 935 0	PUMP COVER
O-RING	11219376	10	1	114	11 21 991 8	BEARING FLANGE
O-RING	11220389	24	1	168	11 22 127 4	PUMP ELEMENT
O-RING	11220389	24	1	174	10 35 161 0	SEALING SET CPL
O-RING	11221283	2	1	173	11 22 127 6	ADAPTOR
O-RING	11224740	25	1	451	51 24 059 14	VARIABLE DISPLACEMENT MO
O-RING	11226084	90	1	387	51 14 347 14	SG SAFETY BLOCK
O-RING	11226144	210	4	387	51 14 347 14	SG SAFETY BLOCK
O-RING	11239916	4	1	671	51 16 404 14	LOWERING BRAKE VALVE
O-RING	11249804	9	1	450	11 89 617 8	SEALING SET
O-RING	11251423	8	2	450	11 89 617 8	SEALING SET
O-RING	11267377	6	1	102	11 21 992 7	COVER
O-RING	11267377	6	1	103	11 21 992 9	COVER
O-RING	11267418	9	1	107	10 59 347 4	PRESSURE LIMITING VALVE
O-RING	11267418	8	1	108	11 21 936 9	LOCKING SET
O-RING	11910327	110	1	529	10 09 917 3	DOUBLE-ACTING CYL
O-RING	11940147	6	1	388	51 22 991 14	OIL MOTOR
O-RING	510587908	26	1	191	10 57 532 2	INTAKE PIPE OIL CPL
O-RING	592293414	180	1	432	11 93 934 6	AIR CONDITIONING
O-RING	592293514	190	1	432	11 93 934 6	AIR CONDITIONING
O-RING	7000329	23	2	120	92 74 731	SEAL KIT CONNECTING HOUS
O-RING	7004512	32	1	115	10 11 834 9	DOUBLE V-PUMP
O-RING	7004512	32	1	138	92 76 408	SEAL KIT DOUBLE PUMP
O-RING	7006213	9	1	108	11 21 936 9	LOCKING SET
O-RING	7007492	10	1	107	10 59 347 4	PRESSURE LIMITING VALVE
O-RING	7009080	5	1	284	10 14 821 5	THERMOSTAT HOUSING ASS
O-RING	7019733	2	1	172	70 19 834	ADAPTOR
O-RING	7022118	29	2	159	10 13 803 4	GASKET KIT INT.FLANGE
O-RING	7022118	14	1	451	51 24 059 14	VARIABLE DISPLACEMENT MO

Description	Item	Pos.	Quantity	Sheet	Assembly	Description
O-RING	7028151	26	1	455	11 22 473 8	ADJUSTMENT
O-RING	704274808	70	5	532	51 14 755 14	PRESSURE LIMITING VALVE
O-RING	726401514	15	1	65	10 56 073 3	FUEL TANK CPL
O-RING	726403201	89	1	471	96 93 178 01	TRACTION DRIVE
O-RING	726403514	18	1	41	51 05 719 14	QUICK-FITTING THREAD COU
O-RING	726404414	20	4	192	10 58 017 0	RETURN PIPE
O-RING	726408414	19	1	41	51 05 719 14	QUICK-FITTING THREAD COU
O-RING	726409714	27	1	191	10 57 532 2	INTAKE PIPE OIL CPL
O-RING	726409814	24	3	60	10 56 070 1	TANK HYDR CPL
O-RING	726410201	79	1	471	96 93 178 01	TRACTION DRIVE
O-RING	726411214	29	3	94	11 24 773 5	HYDR POWER UNIT
O-RING	7264148	24	1	396	90 01 376 2	SLEWING GEAR DRIVE
O-RING	726424214	16	1	629	54 02 705 14	DRIVE UNIT CPL
O-RING	726428401	91	1	471	96 93 178 01	TRACTION DRIVE
O-RING	726428714	25	2	60	10 56 070 1	TANK HYDR CPL
O-RING	726429814	5	1	111	11 26 744 7	SHUTTLE VALVE
O-RING	726431414	25	2	191	10 57 532 2	INTAKE PIPE OIL CPL
O-RING	726431414	29	1	191	10 57 532 2	INTAKE PIPE OIL CPL
O-RING	726435801	68	1	396	90 01 376 2	SLEWING GEAR DRIVE
O-RING	726450601	6	2	471	96 93 178 01	TRACTION DRIVE
O-RING	726453901	69	1	396	90 01 376 2	SLEWING GEAR DRIVE
O-RING	726456214	58	1	380	99 04 645 14	DRIVE
O-RING	726456914	8	1	39	51 33 139 14	DOUBLE-ACTING CYL
O-RING	726456914	8	1	703	59 20 008 14	DOUBLE-ACTING CYL
O-RING	726459414	12	1	451	51 24 059 14	VARIABLE DISPLACEMENT MO
O-RING	726461014	24	2	446	11 89 300 5	TUBING HYDR
O-RING	726461714	9	2	385	10 55 216 1	TUBING HYDR
O-RING	7264625	1	1	236	50 04 624	OIL DRAIN PLUG
O-RING	726466314	180	1	86	59 21 041 14	DOUBLE-ACTING CYL
O-RING	726469014	70	1	627	54 02 703 14	FLANGE CPL
O-RING	7372232	3	1	392	10 65 027 0	CLOSING RING
O-RING	7380015	22	2	120	92 74 731	SEAL KIT CONNECTING HOUS
O-RING	7380083	3	1	286	10 14 274 2	COOLANT PIPE BEND ADD-ON
O-RING	7380120	28	2	120	92 74 731	SEAL KIT CONNECTING HOUS
O-RING	7380297	39	1	148	10 13 802 7	REPAIR KIT SHAFT
O-RING	7380297	39	1	156	10 13 803 2	REPAIR KIT LOCK RING
O-RING	7380297	31	1	158	10 13 803 3	SEAL KIT CPL.
O-RING	7380297	21	1	164	10 13 452 1	THROUGH DRIVE
O-RING	7380348	24	2	120	92 74 731	SEAL KIT CONNECTING HOUS
O-RING	7380423	12	1	235	10 15 529 8	OIL SUMP PRE-ASS.
O-RING	7380574	18	1	157	10 12 226 2	REGULATION REPAIR KIT
O-RING	7380576	27	1	160	10 12 226 5	SEAL KIT REGULATING VALVE
O-RING	7380596	81	1	122	92 73 644	SEAL KIT REGULATING VALVE
O-RING	7380601	22	1	162	10 13 000 5	THROUGH DRIVE
O-RING	7380601	22	1	164	10 13 452 1	THROUGH DRIVE
O-RING	7380605	22	1	161	10 12 987 4	THROUGH DRIVE
O-RING	7380605	40	1	202	11 24 114 1	COOLER INSTALLATION CHA
O-RING	7380605	5	1	275	10 14 736 4	AIR INTAKE ASSEMBLY
O-RING	7380608	26	1	160	10 12 226 5	SEAL KIT REGULATING VALVE
O-RING	7380610	23	2	159	10 13 803 4	GASKET KIT INT.FLANGE
O-RING	7380612	65	1	122	92 73 644	SEAL KIT REGULATING VALVE
O-RING	7380648	32	10	120	92 74 731	SEAL KIT CONNECTING HOUS
O-RING	7380648	64	5	121	90 74 418	REGULATING VALVE
O-RING	7380648	64	5	122	92 73 644	SEAL KIT REGULATING VALVE
O-RING	7380653	8	2	228	10 14 768 6	POWER UNIT SUPPORT ATT
O-RING	7380653	9	1	299	10 11 557 7	FLYWHEEL HOUSING MOUNT
O-RING	7380656	18	1	127	90 77 464	RS FLANGE
O-RING	7380656	18	4	138	92 76 408	SEAL KIT DOUBLE PUMP
O-RING	7380657	36	1	136	92 68 016	REPAIR KIT LOCK RING
O-RING	7380657	2	1	307	10 14 637 4	LOCKING PIECES

Description	Item	Pos.	Quantity	Sheet	Assembly	Description
O-RING	7380691	22	1	163	10 13 235 7	CONSTRUCTION KIT OUTPUT
O-RING	7380691	22	1	165	10 13 806 8	THROUGH DRIVE
O-RING	7380865	62	1	122	92 73 644	SEAL KIT REGULATING VALVE
O-RING	7380868	70	1	122	92 73 644	SEAL KIT REGULATING VALVE
O-RING	7380868	70	1	129	92 75 443	REPAIR SET LID
O-RING	7380888	56	2	120	92 74 731	SEAL KIT CONNECTING HOUS
O-RING	7380888	61	1	121	90 74 418	REGULATING VALVE
O-RING	7380888	61	1	122	92 73 644	SEAL KIT REGULATING VALVE
O-RING	7380935	2	1	278	10 29 998 8	HEATING FLANGE PRE.ASS.
O-RING	7380955	9	2	252	10 12 948 0	OIL COOLER, PRE-ASSEMBLE
O-RING	7380970	41	1	202	11 24 114 1	COOLER INSTALLATION CHA
O-RING	7380970	7	1	276	10 14 967 6	CONNECTING LINE ADD-ON
O-RING	7380986	12	1	215	10 30 300 7	FUEL PREFILTER
O-RING	7380987	21	1	160	10 12 226 5	SEAL KIT REGULATING VALVE
O-RING	7381004	70	1	137	92 73 187	REPAIR KIT MAGNET
O-RING	7381013	23	2	145	10 12 224 8	RK ADDITIONAL PARTS
O-RING	7381013	23	2	158	10 13 803 3	SEAL KIT CPL.
O-RING	7381056	24	1	122	92 73 644	SEAL KIT REGULATING VALVE
O-RING	7381056	24	1	125	92 78 875	PRESSURE CUT-OFF
O-RING	7381082	82	1	122	92 73 644	SEAL KIT REGULATING VALVE
O-RING	7381087	63	1	122	92 73 644	SEAL KIT REGULATING VALVE
O-RING	7381103	60	1	122	92 73 644	SEAL KIT REGULATING VALVE
O-RING	7381103	2	1	302	10 12 797 9	LOCKING PIECES
O-RING	7381127	21	1	154	10 12 352 8	STOP PLUG
O-RING	7381127	21	1	159	10 13 803 4	GASKET KIT INT.FLANGE
O-RING	7381128	20	1	154	10 12 352 8	STOP PLUG
O-RING	7381128	22	1	159	10 13 803 4	GASKET KIT INT.FLANGE
O-RING	7381438	12	1	143	10 12 321 4	SEAL KIT PRESSUR.CONTROL
O-RING	7381439	11	1	143	10 12 321 4	SEAL KIT PRESSUR.CONTROL
O-RING	7381440	10	1	143	10 12 321 4	SEAL KIT PRESSUR.CONTROL
O-RING	7381442	23	1	122	92 73 644	SEAL KIT REGULATING VALVE
O-RING	7381442	23	1	125	92 78 875	PRESSURE CUT-OFF
O-RING	7381446	22	1	160	10 12 226 5	SEAL KIT REGULATING VALVE
O-RING	7381526	4	1	287	10 14 274 4	COOLING WATER AIR BLEED
O-RING	7381593	7	2	232	10 14 201 8	CRANKCASE BREATHER ASS
O-RING	7381615	9	1	288	10 14 601 2	MANIFOLD FOR WATER CPL.
O-RING	7381685	4	1	255	10 13 394 7	SUCTION PUMP WITH FASTEN
O-RING	7381779	7	2	228	10 14 768 6	POWER UNIT SUPPORT ATT
O-RING	7381779	5	2	288	10 14 601 2	MANIFOLD FOR WATER CPL.
O-RING	7382059	5	1	254	10 13 394 5	LUBRICATING OIL PUMP
O-RING	7412937	15	1	215	10 30 300 7	FUEL PREFILTER
O-RING	761032203	73	1	396	90 01 376 2	SLEWING GEAR DRIVE
O-RING	790311914	30	1	94	11 24 773 5	HYDR POWER UNIT
O-RING	790347014	330	1	98	11 24 682 0	DISTRIBUTOR GEARBOX
O-RING	790353814	6	1	716	51 03 361 14	SINGLE-ACTING CYL
O-RING	9177947	28	1	191	10 57 532 2	INTAKE PIPE OIL CPL
O-RING PLATE	511486614	30	1	532	51 14 755 14	PRESSURE LIMITING VALVE
OIL COOLER	10352185	1	1	43	10 22 592 5	COOLER MOTOR
OIL COOLER	5700088	2	1	252	10 12 948 0	OIL COOLER, PRE-ASSEMBLE
OIL COOLER ADD-ON	10129481	130	1	223	12 42 545 4	DIESEL ENGINE
OIL COOLER HOUSING	10129479	1	1	252	10 12 948 0	OIL COOLER, PRE-ASSEMBLE
OIL COOLER INSTALLATION	10519616	14	1	18	11 24 047 9	SUPERSTRUCTURE CPL
OIL COOLER, PRE-ASSEMBLE	10129480	1	1	251	10 12 948 1	OIL COOLER ADD-ON
OIL DIPSTICK	10145918	2	1	237	10 14 591 9	OIL DIPSTICK WITH PIPE
OIL DIPSTICK	11290849	180	1	98	11 24 682 0	DISTRIBUTOR GEARBOX
OIL DIPSTICK	927610201	15	1	356	93 36 755 01	OIL-GAUGING INSTRUMENT
OIL DIPSTICK CPL.	10142567	4	1	193	11 24 113 9	ADD-ON PARTS DIESEL ENGIN
OIL DIPSTICK WITH PIPE	10145919	21	1	223	12 42 545 4	DIESEL ENGINE
OIL DRAIN PLUG	5004624	8	1	235	10 15 529 8	OIL SUMP PRE-ASS.
OIL DRAIN PLUG G1"X11 MS	403900714	17	4	60	10 56 070 1	TANK HYDR CPL

Description	Item	Pos.	Quantity	Sheet	Assembly	Description
OIL DRAIN PLUG G1"X11 MS	403900714	16	1	65	10 56 073 3	FUEL TANK CPL
OIL DRAIN PLUG G1"X11 MS	403900714	33	2	191	10 57 532 2	INTAKE PIPE OIL CPL
OIL DRAIN PLUG G1"X11 MS	403900714	41	1	195	11 24 114 0	COOLER INSTALLATION WATE
OIL DRAIN PLUG M22X1.5	511442214	27	1	94	11 24 773 5	HYDR POWER UNIT
OIL FILLER NECK	927693401	95	1	396	90 01 376 2	SLEWING GEAR DRIVE
OIL LEVEL SIGHT GLASS	10022192	24	1	356	93 36 755 01	OIL-GAUGING INSTRUMENT
OIL LEVEL SIGHT GLASS	11287761	16	1	200	11 28 734 7	EQUALIZING RESERVOIR
OIL LEVEL SIGHT GLASS	774322101	77	2	396	90 01 376 2	SLEWING GEAR DRIVE
OIL LINE	10583845	4	1	365	10 55 156 3	WINCH
OIL LINE	11893216	6	1	489	10 53 039 8	WINCH
OIL LINE PRE-ASSEMBLY	10146716	25	1	223	12 42 545 4	DIESEL ENGINE
OIL MOTOR	510232214	2	1	620	10 51 726 2	TUBING HYDR
OIL MOTOR	512239414	5	1	203	10 57 423 9	COOLER MOTOR
OIL MOTOR	512250114	6	1	198	10 57 423 7	COOLER MOTOR
OIL MOTOR	512252714	2	1	345	10 51 969 8	NEEDLE LUFFING WINCH HYD
OIL MOTOR	512294214	2	1	362	10 51 968 7	MAIN LUG HYDR
OIL MOTOR	512299114	3	2	385	10 55 216 1	TUBING HYDR
OIL MOTOR	550945314	6	1	43	10 22 592 5	COOLER MOTOR
OIL RETURN PIPE	10131350	1	1	239	10 14 671 6	OIL LINE PRE-ASSEMBLY
OIL RETURN PIPE	10140138	17	1	292	10 14 013 6	EXHAUST TC MOUNTING
OIL SIGHT GLASS	5106280	18	4	60	10 56 070 1	TANK HYDR CPL
OIL SUMP	10155297	1	1	235	10 15 529 8	OIL SUMP PRE-ASS.
OIL SUMP PRE-ASS.	10155298	1	1	234	10 14 844 4	OIL SUMP WITH FASTENING
OIL SUMP WITH FASTENING	10148444	20	1	223	12 42 545 4	DIESEL ENGINE
OIL-GAUGING INSTRUMENT	933675501	10	1	349	96 96 248 01	WINCH
OMNIFIT	7016208	106	1	147	10 13 802 6	RK CYL.+CONTROL PLATE+SH
OMNIFIT	7016208	106	1	153	10 14 131 6	TERMINAL BOARD PRE-ASS.
OPERATING HOURS COUNTE	10599206	31	1	408	10 51 907 9	CONTROL STAND LEFT
OPERATIONAL CONTROL	592291914	123	1	420	10 35 008 0	CABIN
OPERATOR SEAT	10225068	11	1	402	11 27 970 6	CABIN CPL
ORIFICE	10226479	5	1	423	10 35 007 6	SLIDING DOOR
ORIFICE	11248964	21	1	313	11 24 409 0	PANELLING SUPERSTR. INSTA
ORIFICE	11248966	22	1	313	11 24 409 0	PANELLING SUPERSTR. INSTA
ORIFICE	11248990	19	2	313	11 24 409 0	PANELLING SUPERSTR. INSTA
ORIFICE	11248991	15	2	313	11 24 409 0	PANELLING SUPERSTR. INSTA
ORIFICE	11248992	20	2	313	11 24 409 0	PANELLING SUPERSTR. INSTA
OUTER MULTI-DISC	501540414	97	8	380	99 04 645 14	DRIVE
OUTER MULTI-DISC	503192801	8	10	355	93 95 895 01	BRAKE MULTI-DISC SET
OUTER MULTI-DISC	503199301	5	9	397	50 20 383 01	MULTI-DISK BRAKE
OUTER MULTI-DISC	503199301	4	9	399	93 93 478 01	BRAKE MULTI-DISC SET
OUTLET MANIFOLD	10141440	1	1	290	10 14 144 3	EXHAUST PIPE PRE-ASS.
OUTLET MANIFOLD	10141442	2	2	290	10 14 144 3	EXHAUST PIPE PRE-ASS.
OUTLET MODULE	11403695	20	1	309	11 40 371 1	SCR CPL.
OUTPUT SHAFT	938585201	10	1	396	90 01 376 2	SLEWING GEAR DRIVE
OUTPUT SHAFT HOUSING	927562201	1	1	396	90 01 376 2	SLEWING GEAR DRIVE
OUTRIGGER	919014814	23	1	640	99 10 116 14	ROPE GUIDE
OUTRIGGER	919017314	24	1	640	99 10 116 14	ROPE GUIDE
OUTSIDE MIRROR	779002114	43	1	402	11 27 970 6	CABIN CPL
OVAL SCREW M6X20 10.9	10342275	12	14	453	10 00 794 7	HYDRAULIC PARTS DRIVING G
OVERPRESSURE VALVE	10152592	10	1	252	10 12 948 0	OIL COOLER, PRE-ASSEMBLE
PAN-HEAD SCREW	11940203	12	7	390	11 94 017 6	HYDRAULIC PARTS DRIVING G
PAN-HEAD SCREW ISO 7045	10541536	19	20	402	11 27 970 6	CABIN CPL
PAN-HEAD SCREW ISO 7045 M	10541540	4	11	437	11 26 095 6	STEERING CONSOLE RIGHT
PAN-HEAD SCREW ISO 7045	10541561	28	16	402	11 27 970 6	CABIN CPL
PAN-HEAD SCREW ISO 7045	10541561	6	3	438	97 07 857 03	SPIRIT LEVEL ASSY.
PAN-HEAD SCREW ISO 7045	400180214	35	8	402	11 27 970 6	CABIN CPL
PAN-HEAD SCREW ISO 7045	400180214	30	4	411	10 53 171 8	KEYBOARD
PAN-HEAD SCREW ISO 7045	10541563	16	2	720	10 52 155 4	REFUELLING SYSTEM RFK
PAN-HEAD SCREW ISO 7045	10541565	19	2	720	10 52 155 4	REFUELLING SYSTEM RFK
PAN-HEAD SCREW ISO 7045	400180314	36	15	402	11 27 970 6	CABIN CPL

Description	Item	Pos.	Quantity	Sheet	Assembly	Description
PANEL SCREW	11219933	8	1	104	11 21 991 0	PUMP HOUSING
PANELLING RIGHT	592289814	72	1	420	10 35 008 0	CABIN
PANELLING SUPERSTR. INSTA	11244090	11	1	90	11 26 560 6	AGGREGATE DIESEL ENGINE
PAPER FLEECE	10350585	1	1	66	11 28 086 8	AERATION FILTER
PARALLEL PIN	10598777	23	2	455	11 22 473 8	ADJUSTMENT
PARALLEL PIN	11903905	5	1	388	51 22 991 14	OIL MOTOR
PARALLEL PIN 8M6X24 ST 2 K	10011777	9	2	256	10 13 382 3	SUCTION PUMP PRE-ASS.
PARALLEL PIN ISO 2338 6M6X	570948608	33	1	177	11 21 593 6	PUMP ELEMENT
PARALLEL PIN ISO 8734 10M6X	4981077	22	2	145	10 12 224 8	RK ADDITIONAL PARTS
PARALLEL PIN ISO 8734 4M6X	4901104	8	1	256	10 13 382 3	SUCTION PUMP PRE-ASS.
PARALLEL PIN ISO 8734 5M6X	4980046	44	2	119	10 11 835 7	REPAIR KIT CONNECTION HO
PARALLEL PIN ISO 8734 6M6X	4980000	3	1	255	10 13 394 7	SUCTION PUMP WITH FASTEN
PARTITION	602832314	72	1	406	10 55 963 5	SWITCH CABINET X1
PC-BOARD PLATE 1	917585714	51	1	406	10 55 963 5	SWITCH CABINET X1
PEDESTAL	10512048	101	1	420	10 35 008 0	CABIN
PEDESTAL	10512061	89	1	420	10 35 008 0	CABIN
PEDESTAL	11245755	1	2	635	11 24 147 8	UC PLATFORM
PEDESTAL	992671814	1	2	482	99 23 389 14	UC PLATFORM
PENDULUM	990627014	23	1	584	10 59 863 3	PENDULUM CPL
PENDULUM CPL	10598633	1	1	583	99 06 461 14	ANEMOMETER CPL
PERFORATED PLATE	10135441	2	1	235	10 15 529 8	OIL SUMP PRE-ASS.
PERFORATED PLATE	10565879	10	1	327	10 56 580 8	DOOR
PERFORATED PLATE	10566239	12	1	326	10 56 623 7	DOOR
PERFORATED PLATE	10578841	12	1	321	10 57 883 5	DOOR
PERFORATED PLATE	10578971	10	1	323	10 57 897 6	DOOR
PERFORATED PLATE	10579423	12	1	325	10 57 940 0	DOOR
PERFORATED PLATE	11290846	165	2	98	11 24 682 0	DISTRIBUTOR GEARBOX
PILOT CONTROLLED CHECK	510466114	2	1	702	10 51 728 1	TUBING HYDR
PIN	10115230	11	1	455	11 22 473 8	ADJUSTMENT
PIN	10529084	15	1	699	10 58 064 7	VIDEO MONITORING SYSTEM
PIN	10529086	16	1	699	10 58 064 7	VIDEO MONITORING SYSTEM
PIN	10572058	11	4	681	11 89 568 6	SELF-LOADING SYSTEM RFK
PIN	10574630	1	1	498	10 57 462 9	PIN CPL
PIN	11493575	4	1	601	79 04 112 14	BOTTOM HOOK BLOCK
PIN	11934415	4	4	641	99 23 405 14	INTERMEDIATE TENSIONING
PIN	11942798	42	1	77	10 58 163 4	CABIN SUSPENSION CPL
PIN	11944129	30	4	188	11 24 113 8	MOTOR BEARING CPL
PIN	11946386	98	3	511	11 23 820 3	PIVOT PIECE CPL
PIN	11947719	27	2	333	11 24 483 7	MOUNTING PARTS SUPERST
PIN	592291514	1	1	429	59 22 914 14	PLATFORM FIXATION CPL
PIN	9477429	18	1	126	10 13 975 2	REPAIR SET SWIVEL YOKE
PIN	9477439	13	2	117	10 11 835 0	CONNECTION HOUSING
PIN	956067614	3	1	593	99 48 521 14	TIP BOOM CPL
PIN	956070214	9	1	593	99 48 521 14	TIP BOOM CPL
PIN	956711314	23	8	660	10 51 971 3	SELF-LOADING SYSTEM RFK
PIN	956802414	13	1	590	99 23 398 14	ROLLER SET
PIN	956802514	14	1	590	99 23 398 14	ROLLER SET
PIN	959866614	7	1	370	99 29 258 14	LUG SHEAVE SET
PIN	959912614	16	6	341	99 29 803 14	LASHING BALLAST
PIN	968523914	27	1	77	10 58 163 4	CABIN SUSPENSION CPL
PIN	9888133	19	1	126	10 13 975 2	REPAIR SET SWIVEL YOKE
PIN 100X1606 LHRD900-40;100	11239740	22	1	538	11 24 444 4	A-FRAME 1 CPL
PIN 110X198 LHRD900-40;100	959912214	13	6	341	99 29 803 14	LASHING BALLAST
PIN 115X200 LHRD900-40;100	949389914	12	2	538	11 24 444 4	A-FRAME 1 CPL
PIN 120X270 35NICRMOV125	959712214	1	2	82	99 23 451 14	PIVOT BOLT INSTALLATION
PIN 15.9X59X25X83 LHRD750-	950387314	59	10	633	10 55 372 1	ROOF RAILING RFK
PIN 150X330	11230438	4	1	460	51 33 141 14	DOUBLE-ACTING CYL
PIN 20X23 PA 6 G	956266814	3	1	540	91 90 584 14	ANGLE INDICATION
PIN 30X46 LHRD900-40;10019	11949153	15	2	559	11 94 087 8	ASSEMBLY UNIT
PIN 30X46 LHRD900-40;10019	11949153	37	2	640	99 10 116 14	ROPE GUIDE

Description	Item	Pos.	Quantity	Sheet	Assembly	Description
PIN 30X46 LHRD900-40;10019	11949153	3	1	642	99 10 125 14	FORK
PIN 30X46 LHRD900-40;10019	11949153	3	1	644	99 06 789 14	FORK
PIN 35X 120 LHRD750-30;10019	953305103	27	1	640	99 10 116 14	ROPE GUIDE
PIN 40X182 LHRD900-40;10019	10351894	11	4	343	10 51 969 7	NEEDLE LUFFING WINCH
PIN 48X58 LHRD900-40;10019	485568414	38	2	640	99 10 116 14	ROPE GUIDE
PIN 50X138 LHRD900-40;10019	10534039	13	4	83	10 51 969 4	A-FRAME ERECTION CYL INST
PIN 50X157 LHRD900-40;10019	956847814	2	2	582	11 28 610 5	RETAINING DEVICE CPL
PIN 50X95 LHRD900-40;10019	11938016	11	2	442	99 18 041 14	LASHING SUPERSTRUCTURE
PIN 53X67 LHRD900-40;10019	10550993	12	2	581	11 28 629 9	MOUNTING PARTS
PIN 53X82 LHRD900-40;10019	949946714	13	2	581	11 28 629 9	MOUNTING PARTS
PIN 58X113 LHRD900-40;10019	949174814	26	2	593	99 48 521 14	TIP BOOM CPL
PIN 58X95 LHRD900-40;10019	948959414	31	4	593	99 48 521 14	TIP BOOM CPL
PIN 60X110 LHRD750-30;10019	950663614	17	2	83	10 51 969 4	A-FRAME ERECTION CYL INST
PIN 60X120 LHRD900-40;10019	942804914	10	2	593	99 48 521 14	TIP BOOM CPL
PIN 63X120 LHRD900-40;10019	949351814	5	4	643	99 23 420 14	INTERMEDIATE TENSIONING
PIN 63X120 LHRD900-40;10019	949351814	10	1	666	11 23 619 7	SELF-LOADING SYSTEM RFK
PIN 63X140 LHRD900-40;10019	959643514	11	4	581	11 28 629 9	MOUNTING PARTS
PIN 63X95 LHRD900-40;10019	949196614	12	2	561	11 93 703 7	ANCHORING ROD CPL
PIN 63X95 LHRD900-40;10019	949196614	12	2	570	11 93 702 0	ANCHORING ROD CPL
PIN 65X193 LHRD900-40;10019	957831614	10	4	340	10 52 656 0	MOUNTING PARTS
PIN 68X105 LHRD750-30;10019	948545514	39	2	640	99 10 116 14	ROPE GUIDE
PIN 73X95 LHRD900-40;10019	959575714	12	4	522	99 30 060 14	ANCHORING ROD CPL
PIN 73X95 LHRD900-40;10019	959575714	12	4	560	99 24 404 14	ANCHORING ROD CPL
PIN 73X95 LHRD900-40;10019	959575714	12	4	569	99 24 405 14	ANCHORING ROD CPL
PIN 73X95 LHRD900-40;10019	959575714	12	8	576	99 24 406 14	ANCHORING ROD CPL
PIN 73X95 LHRD900-40;10019	959575714	12	4	588	99 24 594 14	ANCHORING ROD CPL
PIN 75X240 LHRD900-40;10019	959912114	12	6	341	99 29 803 14	LASHING BALLAST
PIN 80X371 LHRD900-40;10019	950581614	11	4	510	11 23 820 3	PIVOT PIECE CPL
PIN 80X371 LHRD900-40;10019	950581614	10	1	550	11 28 726 4	PIN CPL
PIN 83X131 LHRD900-40;10019	959921514	12	8	542	99 26 417 14	ANCHORING ROD CPL
PIN 83X131 LHRD900-40;10019	959921514	17	4	588	99 24 594 14	ANCHORING ROD CPL
PIN COMPL.	11213816	4	1	608	79 05 205 14	BOTTOM HOOK BLOCK
PIN CONTACT	605615814	36	5	516	11 90 151 1	CABLE LOOM 1 PIVOT PIECE E
PIN CONTACT	605619814	34	14	516	11 90 151 1	CABLE LOOM 1 PIVOT PIECE E
PIN CONTACT	6905271	13	2	722	10 52 957 6	REFUELLING PUMP CPL
PIN CPL	10574629	11	4	497	11 22 050 0	WINCHES INSTALLATION
PIN CPL	10574629	11	4	503	11 22 050 1	WINCHES INSTALLATION
PIN CPL	11262110	11	4	687	11 89 568 8	SELF-LOADING SYSTEM RFK
PIN CPL	11287264	11	4	549	11 24 570 3	BOOM INTERMEDIATE SECTIO
PIN CPL	11287264	11	4	567	11 24 570 9	BOOM INTERMEDIATE SECTIO
PIN CPL	11287264	11	4	574	11 24 571 5	BOOM INTERMEDIATE SECTIO
PIN CPL	959835714	12	4	687	11 89 568 8	SELF-LOADING SYSTEM RFK
PIN CPL	992921714	29	2	467	11 89 365 0	CRAWLER CARRIER RIGHT CP
PIN CPL	992921714	29	2	478	11 89 365 1	CRAWLER CARRIER LEFT CP
PIN DIN 1435-B 35H11X90X80	453050914	5	12	641	99 23 405 14	INTERMEDIATE TENSIONING
PIN DIN 1435-B 35H11X90X80	453050914	4	12	643	99 23 420 14	INTERMEDIATE TENSIONING
PIN DIN 1435-B 35H11X90X80	453050914	5	14	645	97 05 997 03	INTERMEDIATE TENSIONING
PIN DIN EN 22340-B 25F7X120	485501714	23	2	77	10 58 163 4	CABIN SUSPENSION CPL
PIN DIN EN 22340-B 25F8X88	450052114	30	2	77	10 58 163 4	CABIN SUSPENSION CPL
PIN DIN EN 22340-B 25F8X88	450052114	2	2	82	99 23 451 14	PIVOT BOLT INSTALLATION
PIN DIN EN 22341-B 40H11X11	451436614	13	1	77	10 58 163 4	CABIN SUSPENSION CPL
PIN DIN EN 22341-B 50H11X110	485519214	19	1	666	11 23 619 7	SELF-LOADING SYSTEM RFK
PIN DIN EN 22341-B 80H11X160	485518914	19	2	660	10 51 971 3	SELF-LOADING SYSTEM RFK
PIN EN 10060 28X220X192 X20	942594714	26	2	640	99 10 116 14	ROPE GUIDE
PIN EN 10278 20X144 S355J2;E	958214314	2	1	585	11 28 357 6	MOUNTING PARTS
PIN M12X1.5 NIROSTA	10227129	9	1	519	61 61 541 14	CABLE DRUM
PIN RD20X394 LHRD900-40;100	11942040	2	1	475	10 50 179 5	ACCESS CPL
PIN RD68X175 LHRD900-40;100	959799614	27	8	660	10 51 971 3	SELF-LOADING SYSTEM RFK
PINION GUARD	10099140	16	2	382	10 51 968 2	SG SUPERSTRUCTURE
PIPE CLAMP	10579877	7	1	702	10 51 728 1	TUBING HYDR

Description	Item	Pos.	Quantity	Sheet	Assembly	Description
PIPE CLAMP	11290856	530	1	98	11 24 682 0	DISTRIBUTOR GEARBOX
PIPE CLAMP	11910324	180	2	529	10 09 917 3	DOUBLE-ACTING CYL
PIPE CLAMP	7382216	12	1	14	11 41 475 7	ACCESSORIES AIR COMPRES
PIPE CLAMP	9077164	14	1	294	10 14 622 4	REGULATION BOOST PRESS
PIPE SET	10227437	30	1	666	11 23 619 7	SELF-LOADING SYSTEM RFK
PIPE SET	10588224	10	1	702	10 51 728 1	TUBING HYDR
PIPELINE	10132170	3	1	270	10 14 588 5	LEAK OIL RETURN LINE
PIPELINE	10132180	20	1	270	10 14 588 5	LEAK OIL RETURN LINE
PIPELINE	10141986	4	1	269	10 14 333 9	FUEL LINES
PIPELINE	10141988	1	1	269	10 14 333 9	FUEL LINES
PIPELINE	10141989	2	1	269	10 14 333 9	FUEL LINES
PIPELINE	10142006	8	1	270	10 14 588 5	LEAK OIL RETURN LINE
PIPELINE	10142080	3	1	269	10 14 333 9	FUEL LINES
PIPELINE	10143235	1	1	270	10 14 588 5	LEAK OIL RETURN LINE
PIPELINE	10145889	13	1	270	10 14 588 5	LEAK OIL RETURN LINE
PIPELINE	10145914	12	1	293	10 14 511 2	EXHAUST NOZZLE ATTACHM
PIPELINE	10146838	4	1	294	10 14 622 4	REGULATION BOOST PRESS
PIPELINE	10146839	5	1	294	10 14 622 4	REGULATION BOOST PRESS
PIPELINE	10146840	6	1	294	10 14 622 4	REGULATION BOOST PRESS
PIPELINE	10147368	2	1	274	10 14 736 9	INTAKE STACK ASSEMBLY
PIPELINE	10149699	1	1	285	10 14 821 7	PIPELINE INSTALLATION
PIPELINE	11410004	5	1	14	11 41 475 7	ACCESSORIES AIR COMPRES
PIPELINE INSTALLATION	10139539	7	1	234	10 14 844 4	OIL SUMP WITH FASTENING
PIPELINE INSTALLATION	10148217	381	1	224	12 42 545 4	DIESEL ENGINE
PIPELINE INSTALLATION	11414758	5	1	11	11 92 891 3	COMPRESSOR RFK
PISTON	10007952	4	7	453	10 00 794 7	HYDRAULIC PARTS DRIVING G
PISTON	10143510	1	1	243	10 14 636 7	PISTON CPL.
PISTON	10149655	1	1	229	10 13 845 0	FINAL CONTROL VALVE
PISTON	10152593	1	1	253	10 15 259 2	OVERPRESSURE VALVE
PISTON	10324863	1	9	170	10 32 489 2	DRIVING GEAR
PISTON	11226017	30	1	387	51 14 347 14	SG SAFETY BLOCK
PISTON	11913123	2	1	111	11 26 744 7	SHUTTLE VALVE
PISTON	9886591	6	1	252	10 12 948 0	OIL COOLER, PRE-ASSEMBLE
PISTON BOLT 52X80 16MNCR	10282849	6	1	243	10 14 636 7	PISTON CPL.
PISTON COOLING	10142749	15	6	223	12 42 545 4	DIESEL ENGINE
PISTON COOLING NOZZLE	10151636	1	1	231	10 15 163 4	PISTON COOLING PRE-ASS.
PISTON COOLING PRE-ASS.	10151634	1	1	230	10 14 274 9	PISTON COOLING
PISTON CPL.	10146367	70	6	223	12 42 545 4	DIESEL ENGINE
PISTON PACKING SET	10352353	80	1	685	59 21 826 14	SUPPORT CYLINDER
PISTON PACKING SET	10352357	115	1	685	59 21 826 14	SUPPORT CYLINDER
PISTON RING MG	12476138	4	1	243	10 14 636 7	PISTON CPL.
PISTON ROD	592138614	2	1	716	51 03 361 14	SINGLE-ACTING CYL
PISTON WITH PISTON RINGS	11940198	4	7	390	11 94 017 6	HYDRAULIC PARTS DRIVING G
PIVOT BOLT INSTALLATION	992345114	50	1	18	11 24 047 9	SUPERSTRUCTURE CPL
PIVOT HEAD	513319614	13	1	39	51 33 139 14	DOUBLE-ACTING CYL
PIVOT PIECE CPL	11238203	59	1	2	01 38 376 14	LR 1300 SX
PIVOT PIECE EL	11901509	3	1	508	11 23 820 3	PIVOT PIECE CPL
PIVOT PIECE HYDR	10518261	2	1	508	11 23 820 3	PIVOT PIECE CPL
PIVOT PIECE ST. CONST.	11238202	10	1	508	11 23 820 3	PIVOT PIECE CPL
PL LATCH	10348527	13	1	599	79 03 862 14	LOAD HOOK
PLANET WHEEL		7	5	352	93 88 497 01	PLANETARY GEARBOX
PLANET WHEEL		32	3	352	93 88 497 01	PLANETARY GEARBOX
PLANET WHEEL		42	3	352	93 88 497 01	PLANETARY GEARBOX
PLANET WHEEL	540270614	12	3	625	54 02 701 14	PLANETARY STAGE
PLANET WHEEL	540271014	22	3	625	54 02 701 14	PLANETARY STAGE
PLANET WHEEL	927562601	20	5	396	90 01 376 2	SLEWING GEAR DRIVE
PLANET WHEEL	927596701	40	3	396	90 01 376 2	SLEWING GEAR DRIVE
PLANET WHEEL	927651501	55	3	396	90 01 376 2	SLEWING GEAR DRIVE
PLANET WHEEL	944404303	18	5	471	96 93 178 01	TRACTION DRIVE
PLANET WHEEL	944404403	1	1	472	94 44 043 03	PLANET WHEEL

Description	Item	Pos.	Quantity	Sheet	Assembly	Description
PLANET WHEEL	944404803	28	3	471	96 93 178 01	TRACTION DRIVE
PLANET WHEEL	944404903	1	1	473	94 44 048 03	PLANET WHEEL
PLANET WHEEL	944406503	38	3	471	96 93 178 01	TRACTION DRIVE
PLANET WHEEL	944406603	1	1	474	94 44 065 03	PLANET WHEEL
PLANET WHEEL	944434703	48	3	471	96 93 178 01	TRACTION DRIVE
PLANETARY CARRIER		30	1	352	93 88 497 01	PLANETARY GEARBOX
PLANETARY CARRIER		40	1	352	93 88 497 01	PLANETARY GEARBOX
PLANETARY CARRIER	540271314	27	1	625	54 02 701 14	PLANETARY STAGE
PLANETARY CARRIER	540272514	1	1	628	54 02 704 14	POWER TAKE-OFF CPL
PLANETARY CARRIER	90022085	15	1	396	90 01 376 2	SLEWING GEAR DRIVE
PLANETARY CARRIER	927597201	35	1	396	90 01 376 2	SLEWING GEAR DRIVE
PLANETARY CARRIER	927651401	50	1	396	90 01 376 2	SLEWING GEAR DRIVE
PLANETARY CARRIER	944403903	15	1	471	96 93 178 01	TRACTION DRIVE
PLANETARY CARRIER	944404603	25	1	471	96 93 178 01	TRACTION DRIVE
PLANETARY CARRIER	944406403	35	1	471	96 93 178 01	TRACTION DRIVE
PLANETARY CARRIER	969392201	45	1	471	96 93 178 01	TRACTION DRIVE
PLANETARY GEARBOX	938849701	5	1	349	96 96 248 01	WINCH
PLANETARY STAGE	11893250	2	1	491	11 89 322 8	REPAIR KIT
PLANETARY STAGE	11893252	4	1	491	11 89 322 8	REPAIR KIT
PLANETARY STAGE	540270114	1	1	624	59 20 694 14	WINCH
PLANETARY WHEEL AXLE	540271414	28	3	625	54 02 701 14	PLANETARY STAGE
PLANETARY WHEEL AXLE	540272614	2	3	628	54 02 704 14	POWER TAKE-OFF CPL
PLATE	10142763	2	1	287	10 14 274 4	COOLING WATER AIR BLEED
PLATE	10529071	11	1	699	10 58 064 7	VIDEO MONITORING SYSTEM
PLATE	10529074	12	1	699	10 58 064 7	VIDEO MONITORING SYSTEM
PLATE	10574357	19	2	319	11 24 409 1	COVERS
PLATE	10581590	21	1	319	11 24 409 1	COVERS
PLATE	11217232	18	4	313	11 24 409 0	PANELLING SUPERSTR. INSTA
PLATE	11274636	16	4	601	79 04 112 14	BOTTOM HOOK BLOCK
PLATE	11310952	12	2	552	11 28 390 8	BOOM ACCESS
PLATE	11310952	12	2	568	11 28 583 8	BOOM ACCESS
PLATE	11310952	12	2	575	11 28 626 1	BOOM ACCESS
PLATE	11311241	10	1	552	11 28 390 8	BOOM ACCESS
PLATE	11311241	10	1	568	11 28 583 8	BOOM ACCESS
PLATE	11311241	10	1	575	11 28 626 1	BOOM ACCESS
PLATE	11311262	11	1	552	11 28 390 8	BOOM ACCESS
PLATE	11311336	11	1	568	11 28 583 8	BOOM ACCESS
PLATE	11311393	11	1	575	11 28 626 1	BOOM ACCESS
PLATE	950102914	16	1	591	99 30 800 14	HOIST LIMIT SWITCH INSTAL.
PLATE	950143914	37	2	590	99 23 398 14	ROLLER SET
PLATE	954432003	17	10	497	11 22 050 0	WINCHES INSTALLATION
PLATE	954432003	17	10	503	11 22 050 1	WINCHES INSTALLATION
PLATE	954486503	18	6	497	11 22 050 0	WINCHES INSTALLATION
PLATE	954486503	18	6	503	11 22 050 1	WINCHES INSTALLATION
PLATE	971363403	93	1	511	11 23 820 3	PIVOT PIECE CPL
PLATE CPL	11236114	16	4	608	79 05 205 14	BOTTOM HOOK BLOCK
PLATFORM FIXATION CPL	592291414	116	1	420	10 35 008 0	CABIN
PLUG	10447747	2	4	459	10 55 154 8	QUICK RELEASE FITTING
PLUG	10447747	2	6	514	10 55 157 6	QUICK RELEASE FITTING
PLUG	11247913	1	4	461	10 55 119 1	LID CPL
PLUG	605013408	52	1	516	11 90 151 1	CABLE LOOM 1 PIVOT PIECE E
PLUG	605253314	201	11	406	10 55 963 5	SWITCH CABINET X1
PLUG	605253414	211	1	406	10 55 963 5	SWITCH CABINET X1
PLUG	605254114	213	1	406	10 55 963 5	SWITCH CABINET X1
PLUG	605254214	203	11	406	10 55 963 5	SWITCH CABINET X1
PLUG	605264814	51	3	403	11 27 973 6	CABIN EL
PLUG	693013014	11	1	722	10 52 957 6	REFUELLING PUMP CPL
PLUG	950490414	11	1	554	11 28 397 7	SUMP PAN CPL
PLUG	950490414	11	1	555	11 28 397 8	SUMP PAN CPL
PLUG	971230303	60	10	633	10 55 372 1	ROOF RAILING RFK

Description	Item	Pos.	Quantity	Sheet	Assembly	Description
PLUG	993352014	53	8	633	10 55 372 1	ROOF RAILING RFK
PLUG COUPLING	10678754	23	2	217	11 24 114 5	ASSEMBLY INSTAL.
PLUG COUPLING	11082454	22	2	217	11 24 114 5	ASSEMBLY INSTAL.
PLUG COUPLING	11482007	25	4	217	11 24 114 5	ASSEMBLY INSTAL.
PLUG-IN NOZZLE	511464114	30	1	715	10 56 173 5	TUBING HYDR
PLUG-IN PIPE	10125386	6	1	234	10 14 844 4	OIL SUMP WITH FASTENING
PLUG-IN SLEEVE	10871759	25	1	8	11 92 958 8	AIR DUCT CPL
PLUG-IN SLEEVE	10871759	21	6	217	11 24 114 5	ASSEMBLY INSTAL.
POUCH SOCKET	11236233	11	1	692	11 23 626 6	ROPE MOUNTING RFK
POUCH SOCKET	773941308	11	1	358	99 23 387 14	ROPES LUG NEEDLE BOOM
POWER TAKE-OFF CPL	540270414	23	1	624	59 20 694 14	WINCH
POWER TAKE-OFF FLANGE		10	1	352	93 88 497 01	PLANETARY GEARBOX
POWER UNIT SUPPORT ATT	10147686	12	1	223	12 42 545 4	DIESEL ENGINE
PRESSURE ADAPTER FASTEN	10135434	193	6	223	12 42 545 4	DIESEL ENGINE
PRESSURE CONTROL VALVE	10115241	49	1	455	11 22 473 8	ADJUSTMENT
PRESSURE CUT-OFF	9278875	1	1	124	10 11 836 7	RK PRESSUR CUT-OFF
PRESSURE FEEDER VALVE	10123236	2	2	152	10 14 131 7	REPAIR KIT CONNECTING PL
PRESSURE FEEDER VALVE	10135472	10	1	142	10 12 942 0	PRESSURE REDUCTION VALV
PRESSURE FEEDER VALVE	11835951	182	12	30	11 28 647 6	VALVE BLOCK
PRESSURE FILTER	10223581	19	1	94	11 24 773 5	HYDR POWER UNIT
PRESSURE GAUGE	750001114	7	1	505	10 56 183 8	TOOL
PRESSURE GAUGE	750003414	8	1	505	10 56 183 8	TOOL
PRESSURE GAUGE CONNECT	7363730	9	2	505	10 56 183 8	TOOL
PRESSURE LIMITING CARTRI	592309014	200	1	30	11 28 647 6	VALVE BLOCK
PRESSURE LIMITING CARTRI	592309014	205	1	30	11 28 647 6	VALVE BLOCK
PRESSURE LIMITING VALVE	10350546	2	1	87	10 22 540 8	VALVE BLOCK
PRESSURE LIMITING VALVE	10593474	3	1	104	11 21 991 0	PUMP HOUSING
PRESSURE LIMITING VALVE	10872307	9	1	8	11 92 958 8	AIR DUCT CPL
PRESSURE LIMITING VALVE	11219368	2	1	104	11 21 991 0	PUMP HOUSING
PRESSURE LIMITING VALVE	11233731	5	1	87	10 22 540 8	VALVE BLOCK
PRESSURE LIMITING VALVE	11233731	6	1	87	10 22 540 8	VALVE BLOCK
PRESSURE LIMITING VALVE	11233731	2	1	530	59 20 224 14	LOAD HOLDING VALVE
PRESSURE LIMITING VALVE	11293250	3	2	38	59 21 458 14	VALVE BLOCK
PRESSURE LIMITING VALVE	511414514	18	1	94	11 24 773 5	HYDR POWER UNIT
PRESSURE LIMITING VALVE	511467914	4	1	620	10 51 726 2	TUBING HYDR
PRESSURE LIMITING VALVE	511475514	7	1	528	10 51 959 1	TUBING HYDR
PRESSURE LIMITING VALVE	511486714	20	1	532	51 14 755 14	PRESSURE LIMITING VALVE
PRESSURE LIMITING VALVE	511619614	50	2	346	51 22 527 14	OIL MOTOR
PRESSURE LIMITING VALVE	511639714	50	2	363	51 22 942 14	OIL MOTOR
PRESSURE LIMITING VALVE	511655114	50	2	455	11 22 473 8	ADJUSTMENT
PRESSURE LIMITING VALVE	592323114	5	4	446	11 89 300 5	TUBING HYDR
PRESSURE PIN	10101458	9	3	170	10 32 489 2	DRIVING GEAR
PRESSURE REDUCTION VALV	10129420	9	2	141	11 36 218 7	REGULATING VALVE
PRESSURE REDUCTION VALV	510438514	4	2	446	11 89 300 5	TUBING HYDR
PRESSURE REDUCTION VALV	511476914	3	1	345	10 51 969 8	NEEDLE LUFFING WINCH HYD
PRESSURE REDUCTION VALV	511476914	4	1	362	10 51 968 7	MAIN LUG HYDR
PRESSURE SENSOR	10515473	66	2	46	11 24 519 0	SUPERSTRUCTURE EL
PRESSURE SENSOR	11219179	65	2	46	11 24 519 0	SUPERSTRUCTURE EL
PRESSURE SPRING	10007967	7	1	453	10 00 794 7	HYDRAULIC PARTS DRIVING G
PRESSURE SPRING	10115224	6	1	455	11 22 473 8	ADJUSTMENT
PRESSURE SPRING	10129501	4	1	253	10 15 259 2	OVERPRESSURE VALVE
PRESSURE SPRING	10296909	133	14	30	11 28 647 6	VALVE BLOCK
PRESSURE SPRING	10349778	132	1	30	11 28 647 6	VALVE BLOCK
PRESSURE SPRING	10529089	17	1	699	10 58 064 7	VIDEO MONITORING SYSTEM
PRESSURE SPRING	11118160	6	1	229	10 13 845 0	FINAL CONTROL VALVE
PRESSURE SPRING	11226019	40	1	387	51 14 347 14	SG SAFETY BLOCK
PRESSURE SPRING	11267416	6	1	107	10 59 347 4	PRESSURE LIMITING VALVE
PRESSURE SPRING	11267442	5	1	109	11 06 730 4	SHUTDOWN VALVE
PRESSURE SPRING	11305568	75	16	380	99 04 645 14	DRIVE
PRESSURE SPRING	11305579	76	16	380	99 04 645 14	DRIVE

Description	Item	Pos.	Quantity	Sheet	Assembly	Description
PRESSURE SPRING	11940199	7	1	390	11 94 017 6	HYDRAULIC PARTS DRIVING G
PRESSURE SPRING	7000942	164	7	30	11 28 647 6	VALVE BLOCK
PRESSURE SPRING	7024503	171	14	30	11 28 647 6	VALVE BLOCK
PRESSURE SPRING	7028143	5	1	107	10 59 347 4	PRESSURE LIMITING VALVE
PRESSURE SPRING	720046001	7	22	397	50 20 383 01	MULTI-DISK BRAKE
PRESSURE SPRING	720046101	8	12	397	50 20 383 01	MULTI-DISK BRAKE
PRESSURE SPRING	7381699	30	21	147	10 13 802 6	RK CYL.+CONTROL PLATE+SH
PRESSURE SPRING	7382167	31	24	130	98 89 984	REPAIR KIT DRIVING MECHAN
PRESSURE SPRING	7382167	31	24	133	98 89 983	REPAIR KIT DRIVING MECHAN
PRESSURE SPRING	9266088	14	1	125	92 78 875	PRESSURE CUT-OFF
PRESSURE SPRING	9267342	12	1	118	92 67 343	VENTILATION VALVE
PRESSURE SPRING	9886756	7	1	252	10 12 948 0	OIL COOLER, PRE-ASSEMBLE
PRESSURE SWITCH	10352111	16	1	60	10 56 070 1	TANK HYDR CPL
PRESSURE SWITCH	11236712	5	1	706	11 21 750 0	LIQUEFIER
PRESSURE SWITCH	11903869	3	1	709	10 56 536 7	SOLENOID VALVE BUILT-IN KI
PRESSURE SWITCH ON	10352119	12	1	486	11 26 260 6	WINCH 1 HYDR
PRESSURE SWITCH ON	10352119	12	1	501	11 26 261 1	WINCH 2 HYDR
PRESSURE TRANSMITTER	9076531	10	2	306	10 14 297 7	ENGINE CONTROL SENSORS
PRESSURE TRANSMITTER C	9076550	11	1	306	10 14 297 7	ENGINE CONTROL SENSORS
PRESSURE VALVE	11229183	5	1	34	10 35 148 6	VALVE BLOCK
PRESSURE VALVE	11229185	9	1	34	10 35 148 6	VALVE BLOCK
PRESSUREGAUGE DIRECTC	510694314	10	2	505	10 56 183 8	TOOL
PROFIL CLAMP	10141051	30	1	309	11 40 371 1	SCR CPL.
PROFIL CLAMP	10494116	21	2	211	11 24 114 3	EXHAUST GAS SYSTEM
PROFIL CLAMP	10494116	21	2	308	11 90 032 5	EXHAUST GAS SYSTEM
PROFIL CLAMP	10494117	22	2	308	11 90 032 5	EXHAUST GAS SYSTEM
PROFILE	592291114	97	1	420	10 35 008 0	CABIN
PROFILE CORD	501507014	13	1	626	54 02 702 14	ROPE DRUM CPL
PROFILE HOLLOW SHAFT	10350230	130	2	98	11 24 682 0	DISTRIBUTOR GEARBOX
PROFILE HOLLOW SHAFT	11253077	140	2	98	11 24 682 0	DISTRIBUTOR GEARBOX
PROPORTIONAL MAGNET	11219375	2	2	113	11 21 991 7	CONTROL GEAR
PROTECTING CAP	10542325	96	1	404	11 27 973 6	CABIN EL
PROTECTING CAP	10801869	16	1	155	10 12 323 6	PRESSURE FEEDER VALVE
PROTECTING CAP	11266978	14	80	441	10 51 969 6	CONNECTION SUPERSTR UC
PROTECTING CAP	7013456	3	1	236	50 04 624	OIL DRAIN PLUG
PROTECTING CAP	789000701	34	1	349	96 96 248 01	WINCH
PROTECTION GUARD	10580585	12	1	57	10 51 961 6	OIL COOLER INSTALLATION
PROXIMITY SWITCH	693067614	11	2	579	10 53 141 3	BOOM HEAD EL
PULL ROD	540272114	31	1	627	54 02 703 14	FLANGE CPL
PULL-BACK BALL	10324872	6	1	170	10 32 489 2	DRIVING GEAR
PULL-BACK BALL	9889929	1	1	132	98 89 988	RK PULL-BACK BALL+PULL-B.
PULL-BACK PLATE	7023459	4	1	170	10 32 489 2	DRIVING GEAR
PULL-BACK PLATE	7023835	11	1	390	11 94 017 6	HYDRAULIC PARTS DRIVING G
PULL-BACK PLATE	9889930	2	1	132	98 89 988	RK PULL-BACK BALL+PULL-B.
PUMP	11373478	3	1	217	11 24 114 5	ASSEMBLY INSTAL.
PUMP COVER	11219350	4	1	99	10 53 430 7	V PUMP
PUMP ELEMENT	10540347	1	1	72	11 22 312 3	CENTRAL LUBRICATION PUM
PUMP ELEMENT	11215913	1	1	175	10 22 601 3	V PUMP
PUMP ELEMENT	11215936	1	1	176	11 21 591 3	PUMP ELEMENT
PUMP ELEMENT	11221268	1	1	166	10 22 650 5	V PUMP
PUMP ELEMENT	11221274	1	1	167	11 22 126 8	PUMP ELEMENT
PUMP HOUSING	10132069	1	1	256	10 13 382 3	SUCTION PUMP PRE-ASS.
PUMP HOUSING	11219910	3	1	99	10 53 430 7	V PUMP
PUMP HOUSING	11219930	1	1	104	11 21 991 0	PUMP HOUSING
PUSH BUTTON	693003414	32	1	724	10 52 155 9	MODULE REFUELLING SYSTE
QUICK RELEASE FITTING	10445101	8	1	446	11 89 300 5	TUBING HYDR
QUICK RELEASE FITTING	10445102	7	1	446	11 89 300 5	TUBING HYDR
QUICK RELEASE FITTING	10445105	19	1	20	11 29 618 6	SUPERSTRUCTURE HYDR
QUICK RELEASE FITTING	10551548	9	2	446	11 89 300 5	TUBING HYDR
QUICK RELEASE FITTING	10551576	2	1	513	10 51 826 1	PIVOT PIECE HYDR

Description	Item	Pos.	Quantity	Sheet	Assembly	Description
QUICK-FITTING THREAD COU	510571914	15	1	20	11 29 618 6	SUPERSTRUCTURE HYDR
QUICK-FITTING THREAD COU	510571914	9	1	528	10 51 959 1	TUBING HYDR
QUICK-FITTING THREAD COU	510572214	14	2	20	11 29 618 6	SUPERSTRUCTURE HYDR
QUICK-FITTING THREAD COU	510572214	8	1	528	10 51 959 1	TUBING HYDR
QUICK-FITTING THREAD COU	511511214	18	1	20	11 29 618 6	SUPERSTRUCTURE HYDR
QUICK-FITTING THREAD COU	511511314	17	1	20	11 29 618 6	SUPERSTRUCTURE HYDR
QUICK-FITTING THREAD COU	511704214	8	1	20	11 29 618 6	SUPERSTRUCTURE HYDR
QUICK-FITTING THREAD COU	511704314	2	1	506	91 90 239 14	CABLE HYDR
QUICK-FITTING THREAD COU	511708414	16	1	20	11 29 618 6	SUPERSTRUCTURE HYDR
RADIO RFK	10592569	14	1	2	01 38 376 14	LR 1300 SX
RAIL	11306945	10	1	651	11 30 694 4	RAIL CPL
RAIL CPL	10554229	11	2	649	10 55 280 7	GRATING CPL
RAIL CPL	10554368	13	2	654	11 29 474 2	GANGWAY INTERM. SECTION
RAIL CPL	10554368	13	2	655	11 29 474 3	GANGWAY INTERM. SECTION
RAIL CPL	10554368	14	2	655	11 29 474 3	GANGWAY INTERM. SECTION
RAIL CPL	10554881	15	2	655	11 29 474 3	GANGWAY INTERM. SECTION
RAIL CPL	10557413	10	2	658	10 55 722 4	FALL PROTECTION RFK
RAIL CPL	10564692	10	2	657	10 55 514 8	FALL PROTECTION RFK
RAIL CPL	11306944	12	2	650	11 29 473 7	GANGWAY INTERM. SECTION
RAILING FOOT	10349402	19	10	631	10 55 372 1	ROOF RAILING RFK
RAILING ST.CONST.	10559163	18	2	631	10 55 372 1	ROOF RAILING RFK
RAILING ST.CONST.	10585923	10	1	631	10 55 372 1	ROOF RAILING RFK
RAILING ST.CONST.	10585924	11	1	631	10 55 372 1	ROOF RAILING RFK
RAILING ST.CONST.	10585925	12	1	631	10 55 372 1	ROOF RAILING RFK
RAILING ST.CONST.	10585926	13	1	631	10 55 372 1	ROOF RAILING RFK
REAR WINDOW	592289014	48	1	419	10 35 008 0	CABIN
RECEPTACLE	602209314	80	42	51	10 56 645 8	TERMINAL BOX
RECEPTACLE	602303214	73	1	51	10 56 645 8	TERMINAL BOX
RECTANGULAR SECTION RIN	10472425	109	18	22	11 29 618 6	SUPERSTRUCTURE HYDR
RECTANGULAR SECTION RIN	10472425	70	3	94	11 24 773 5	HYDR POWER UNIT
RECTANGULAR SECTION RIN	10472425	616	2	362	10 51 968 7	MAIN LUG HYDR
RECTANGULAR SECTION RIN	10472425	631	10	448	11 89 300 5	TUBING HYDR
RECTANGULAR SECTION RIN	10472425	740	5	486	11 26 260 6	WINCH 1 HYDR
RECTANGULAR SECTION RIN	10472425	740	5	501	11 26 261 1	WINCH 2 HYDR
RECTANGULAR SECTION RIN	10490781	110	19	22	11 29 618 6	SUPERSTRUCTURE HYDR
RECTANGULAR SECTION RIN	10490781	72	2	94	11 24 773 5	HYDR POWER UNIT
RECTANGULAR SECTION RIN	10490781	630	2	345	10 51 969 8	NEEDLE LUFFING WINCH HYD
RECTANGULAR SECTION RIN	10490781	641	2	385	10 55 216 1	TUBING HYDR
RECTANGULAR SECTION RIN	10490784	106	4	22	11 29 618 6	SUPERSTRUCTURE HYDR
RECTANGULAR SECTION RIN	10490784	71	13	94	11 24 773 5	HYDR POWER UNIT
RECTANGULAR SECTION RIN	10490784	640	4	385	10 55 216 1	TUBING HYDR
RECTANGULAR SECTION RIN	10490784	660	1	528	10 51 959 1	TUBING HYDR
RECTANGULAR SECTION RIN	10490784	615	1	668	10 51 973 8	SELF-LOADING SYSTEM HYD
RECTANGULAR SECTION RIN	10490785	107	4	22	11 29 618 6	SUPERSTRUCTURE HYDR
RECTANGULAR SECTION RIN	10490787	108	5	22	11 29 618 6	SUPERSTRUCTURE HYDR
REDUCER	11946457	330	1	432	11 93 934 6	AIR CONDITIONING
REDUCER	260493402	33	1	595	97 14 959 03	HOIST LIMIT SWITCH EL
REDUCER	260493702	46	1	516	11 90 151 1	CABLE LOOM 1 PIVOT PIECE E
REDUCING PIECE	11234129	285	1	30	11 28 647 6	VALVE BLOCK
REDUCING PIECE	602604314	56	1	725	10 52 155 9	MODULE REFUELLING SYSTE
REDUCING STUD	11290857	540	1	98	11 24 682 0	DISTRIBUTOR GEARBOX
REFUEL PUMP	510095914	10	1	722	10 52 957 6	REFUELLING PUMP CPL
REFUELLING PUMP CPL	10529576	10	1	720	10 52 155 4	REFUELLING SYSTEM RFK
REFUELLING SYSTEM RFK	10521554	858	1	4	01 38 376 14	LR 1300 SX
REGULATING VALVE	10127478	7	1	139	10 12 878 7	V PUMP
REGULATING VALVE	10127479	10	1	144	10 12 747 8	REGULATING VALVE
REGULATING VALVE	11362187	4	1	139	10 12 878 7	V PUMP
REGULATING VALVE	9074418	4	2	115	10 11 834 9	DOUBLE V-PUMP
REGULATION BOOST PRESS	10146224	436	1	224	12 42 545 4	DIESEL ENGINE
REGULATION REPAIR KIT	10122262	85	1	139	10 12 878 7	V PUMP

Description	Item	Pos.	Quantity	Sheet	Assembly	Description
REINFORCING PLATE	10350084	11	4	523	99 34 198 14	LIEBHERR SIGN
RELAY	10226635	21	1	184	11 24 448 7	CENTRAL POWER UNIT EL
RELAY	630160214	41	2	724	10 52 155 9	MODULE REFUELLING SYSTE
RELAY SOCKET	630122908	84	1	406	10 55 963 5	SWITCH CABINET X1
REPAIR KIT	11231317	3	1	491	11 89 322 8	REPAIR KIT
REPAIR KIT	11231319	5	1	491	11 89 322 8	REPAIR KIT
REPAIR KIT	11231322	1	1	492	11 23 126 9	ROPE DRUM
REPAIR KIT	11231336	1	1	493	11 23 127 0	FLANGE BEARING
REPAIR KIT	11233487	1	1	491	11 89 322 8	REPAIR KIT
REPAIR KIT	11253394	1	1	366	10 58 386 4	FLANGE
REPAIR KIT	11253398	1	1	367	10 55 597 3	ROPE DRUM
REPAIR KIT	11253401	1	1	368	10 58 386 5	GEARBOX
REPAIR KIT	11253440	1	1	369	10 58 384 5	OIL LINE
REPAIR KIT	11893228	1	1	490	11 89 321 3	GEARBOX
REPAIR KIT	11893254	1	1	495	11 89 321 5	WINCH TRESTLE
REPAIR KIT	11893255	1	1	496	11 89 321 6	OIL LINE
REPAIR KIT CONNECTING PL	10141317	83	1	139	10 12 878 7	V PUMP
REPAIR KIT CONNECTION HO	10118357	90	1	117	10 11 835 0	CONNECTION HOUSING
REPAIR KIT DRIVING MECHAN	10138025	81	1	139	10 12 878 7	V PUMP
REPAIR KIT DRIVING MECHAN	9889983	94	1	116	10 11 834 9	DOUBLE V-PUMP
REPAIR KIT DRIVING MECHAN	9889984	92	1	116	10 11 834 9	DOUBLE V-PUMP
REPAIR KIT LEVER	10122245	7	1	146	10 13 802 5	REPAIR KIT DRIVING MECHAN
REPAIR KIT LOCK RING	10138032	84	1	139	10 12 878 7	V PUMP
REPAIR KIT LOCK RING	10138032	6	1	158	10 13 803 3	SEAL KIT CPL.
REPAIR KIT LOCK RING	9268016	96	1	116	10 11 834 9	DOUBLE V-PUMP
REPAIR KIT LOCK RING	9268016	96	1	138	92 76 408	SEAL KIT DOUBLE PUMP
REPAIR KIT MAGNET	9273187	97	1	116	10 11 834 9	DOUBLE V-PUMP
REPAIR KIT SHAFT	10138027	1	1	147	10 13 802 6	RK CYL.+CONTROL PLATE+SH
REPAIR KIT SHAFT	9884402	95	1	116	10 11 834 9	DOUBLE V-PUMP
REPAIR KIT SHAFT	9889977	93	1	116	10 11 834 9	DOUBLE V-PUMP
REPAIR SET DRIVE	10153606	180	1	223	12 42 545 4	DIESEL ENGINE
REPAIR SET DRIVE	11893253	1	1	494	11 89 321 4	DRIVE
REPAIR SET LID	9275443	85	1	115	10 11 834 9	DOUBLE V-PUMP
REPAIR SET SWIVEL BEARIN	10143607	6	1	146	10 13 802 5	REPAIR KIT DRIVING MECHAN
REPAIR SET SWIVEL YOKE	10122246	8	1	146	10 13 802 5	REPAIR KIT DRIVING MECHAN
REPAIR SET SWIVEL YOKE	10139752	84	1	115	10 11 834 9	DOUBLE V-PUMP
RESERVE FUSES	992081114	56	1	406	10 55 963 5	SWITCH CABINET X1
RESTRICTOR BODY	11253687	2	1	94	11 24 773 5	HYDR POWER UNIT
RESTRICTOR BODY	11253689	26	2	94	11 24 773 5	HYDR POWER UNIT
RESTRICTOR BODY	11930190	11	1	8	11 92 958 8	AIR DUCT CPL
RESTRICTOR BODY	917906414	3	1	690	10 55 459 4	TUBING HYDR
RESTRICTOR BODY	917906414	4	1	702	10 51 728 1	TUBING HYDR
RESTRICTOR BODY	929796914	6	1	620	10 51 726 2	TUBING HYDR
RESTRICTOR BODY	946293614	9	1	20	11 29 618 6	SUPERSTRUCTURE HYDR
RESTRICTOR BODY	991487414	26	1	20	11 29 618 6	SUPERSTRUCTURE HYDR
RESTRICTOR BODY	991867414	37	1	20	11 29 618 6	SUPERSTRUCTURE HYDR
RESTRICTOR VALVE	510497214	33	1	94	11 24 773 5	HYDR POWER UNIT
RESTRICTOR VALVE	592070714	145	2	30	11 28 647 6	VALVE BLOCK
RESTRICTOR VALVE	592178314	5	1	668	10 51 973 8	SELF-LOADING SYSTEM HYD
RETAINER CLIP	10122841	2	1	286	10 14 274 2	COOLANT PIPE BEND ADD-ON
RETAINER CLIP	10124798	5	2	276	10 14 967 6	CONNECTING LINE ADD-ON
RETAINER CLIP	10127984	30	9	202	11 24 114 1	COOLER INSTALLATION CHA
RETAINER CLIP	10127984	2	1	275	10 14 736 4	AIR INTAKE ASSEMBLY
RETAINER CLIP	10132073	10	4	290	10 14 144 3	EXHAUST PIPE PRE-ASS.
RETAINER CLIP	10138820	3	1	284	10 14 821 5	THERMOSTAT HOUSING ASS
RETAINER CLIP	10138820	4	1	293	10 14 511 2	EXHAUST NOZZLE ATTACHM
RETAINING CLIP UPPER PART	725810414	54	2	633	10 55 372 1	ROOF RAILING RFK
RETAINING DEVICE CPL	11286105	12	1	578	11 24 132 4	BOOM HEAD CPL
RETAINING DISK		6	1	352	93 88 497 01	PLANETARY GEARBOX
RETAINING DISK	944112203	51	1	396	90 01 376 2	SLEWING GEAR DRIVE

Description	Item	Pos.	Quantity	Sheet	Assembly	Description
RETAINING DISK	944169103	36	1	396	90 01 376 2	SLEWING GEAR DRIVE
RETAINING DISK	944228903	16	1	396	90 01 376 2	SLEWING GEAR DRIVE
RETAINING DISK 115X55X6		31	1	352	93 88 497 01	PLANETARY GEARBOX
RETAINING DISK 115X55X6		41	1	352	93 88 497 01	PLANETARY GEARBOX
RETAINING SPRING 3MM	11297461	3	1	693	11 23 623 3	POUCH SOCKET
RETAINING SPRING 4.5 MM	433105414	12	4	340	10 52 656 0	MOUNTING PARTS
RETAINING SPRING 4.5 MM	433105414	12	2	618	10 51 743 9	ROPE LUG CPL RFK
RETAINING SPRING 4MM	433101208	12	1	562	11 23 290 7	SUPPORT CPL
RETAINING SPRING 4MM	433101208	53	2	581	11 28 629 9	MOUNTING PARTS
RETAINING SPRING 4MM	433101208	34	8	590	99 23 398 14	ROLLER SET
RETAINING SPRING 4MM	433101208	41	2	593	99 48 521 14	TIP BOOM CPL
RETAINING SPRING 4MM	433101208	6	12	641	99 23 405 14	INTERMEDIATE TENSIONING
RETAINING SPRING 4MM	433101208	6	12	643	99 23 420 14	INTERMEDIATE TENSIONING
RETAINING SPRING 4MM	433101208	7	14	645	97 05 997 03	INTERMEDIATE TENSIONING
RETAINING SPRING 4MM	433101208	22	4	647	10 55 601 0	FALL PROTECTION RFK
RETAINING SPRING 4MM	433101208	13	4	657	10 55 514 8	FALL PROTECTION RFK
RETAINING SPRING 4MM	433101208	20	4	687	11 89 568 8	SELF-LOADING SYSTEM RFK
RETAINING SPRING 5MM	433102508	56	2	510	11 23 820 3	PIVOT PIECE CPL
RETAINING SPRING 5MM	433102508	18	2	559	11 94 087 8	ASSEMBLY UNIT
RETAINING SPRING 5MM	433102508	20	2	593	99 48 521 14	TIP BOOM CPL
RETAINING SPRING 5MM	433102508	29	8	660	10 51 971 3	SELF-LOADING SYSTEM RFK
RETAINING SPRING DIN 2194 6	433105008	19	6	341	99 29 803 14	LASHING BALLAST
RETAINING SPRING DIN 2194 6	433105008	13	8	510	11 23 820 3	PIVOT PIECE CPL
RETAINING SPRING DIN 2194 6	433105008	15	2	522	99 30 060 14	ANCHORING ROD CPL
RETAINING SPRING DIN 2194 6	433105008	12	2	550	11 28 726 4	PIN CPL
RETAINING SPRING DIN 2194 6	433105008	15	2	560	99 24 404 14	ANCHORING ROD CPL
RETAINING SPRING DIN 2194 6	433105008	13	1	561	11 93 703 7	ANCHORING ROD CPL
RETAINING SPRING DIN 2194 6	433105008	15	2	569	99 24 405 14	ANCHORING ROD CPL
RETAINING SPRING DIN 2194 6	433105008	13	1	570	11 93 702 0	ANCHORING ROD CPL
RETAINING SPRING DIN 2194 6	433105008	15	2	576	99 24 406 14	ANCHORING ROD CPL
RETAINING SPRING DIN 2194 6	433105008	54	2	581	11 28 629 9	MOUNTING PARTS
RETAINING SPRING DIN 2194 6	433105008	15	2	588	99 24 594 14	ANCHORING ROD CPL
RETAINING SPRING DIN 2194 6	433105008	21	3	593	99 48 521 14	TIP BOOM CPL
RETAINING SPRING DIN 2194 6	433105008	44	2	640	99 10 116 14	ROPE GUIDE
RETAINING SPRING DIN 2194 6	433105008	11	1	666	11 23 619 7	SELF-LOADING SYSTEM RFK
RETURN FILTER	10515724	12	1	60	10 56 070 1	TANK HYDR CPL
RETURN PIPE	10580170	19	1	92	11 24 048 0	CENTRAL POWER UNIT
RIBBED HEX NUT M6 10	10003366	3	1	277	90 78 314	HEATING FLANGE ADD-ON
RING		12	1	352	93 88 497 01	PLANETARY GEARBOX
RING	11220477	10	1	704	11 22 037 2	FOOT PEDAL EL INSTALLATIO
RING	11267455	10	1	112	11 21 935 0	PUMP COVER
RING	9267341	11	1	118	92 67 343	VENTILATION VALVE
RING BOLT DIN 580 M12 C15E	402600314	34	2	640	99 10 116 14	ROPE GUIDE
RING BOLT DIN 580 M16 C15E	402600514	10	6	341	99 29 803 14	LASHING BALLAST
RING BOLT DIN 580 M8 C15E;E	402600114	62	1	315	11 24 409 0	PANELLING SUPERSTR. INSTA
RING NUT DIN 582 M8 C15E;E	411200108	81	1	653	11 30 567 0	TRANSPORT LASHING
RK ADDITIONAL PARTS	10122248	80	1	139	10 12 878 7	V PUMP
RK CRANKSHAFT BEARING	10116928	50	1	240	90 76 458	SET MAIN BEARINGS
RK CRANKSHAFT SEAL	10121335	2	1	241	10 12 134 5	RK CRANKSHAFT SEAL
RK CRANKSHAFT SEAL	10121345	52	1	223	12 42 545 4	DIESEL ENGINE
RK CRANKSHAFT SEAL	10121952	1	1	241	10 12 134 5	RK CRANKSHAFT SEAL
RK CYL.+CONTROL PLATE+SH	10138026	2	1	146	10 13 802 5	REPAIR KIT DRIVING MECHAN
RK CYLINDER+CONTROL PLAT	9889832	2	1	133	98 89 983	REPAIR KIT DRIVING MECHAN
RK CYLINDER+CONTROL PLAT	9889833	2	1	130	98 89 984	REPAIR KIT DRIVING MECHAN
RK HIGH PRESSURE CONNEC	10141140	200	1	262	10 15 315 1	HIGH PRESSURE CONNECTO
RK HIGH PRESSURE PUMP	10150743	1	1	258	10 15 085 7	HIGH PRESSURE PUMP W.FA
RK HIGH PRESSURE PUMP	10150743	200	1	258	10 15 085 7	HIGH PRESSURE PUMP W.FA
RK INJECTOR	10152874	200	1	261	10 15 286 7	INJECTOR WITH FASTENING
RK PISTON WITH GUIDE SHO	10122692	4	1	146	10 13 802 5	REPAIR KIT DRIVING MECHAN
RK PISTON WITH GUIDE SHO	9889831	1	9	130	98 89 984	REPAIR KIT DRIVING MECHAN

Description	Item	Pos.	Quantity	Sheet	Assembly	Description
RK PISTON WITH GUIDE SHO	9889831	1	1	133	98 89 983	REPAIR KIT DRIVING MECHAN
RK PRE-FEED PUMP	10149198	220	1	258	10 15 085 7	HIGH PRESSURE PUMP W.FA
RK PRE-FEED PUMP	10149198	5	1	259	10 15 074 3	RK HIGH PRESSURE PUMP
RK PRESSUR CUT-OFF	10118367	83	1	115	10 11 834 9	DOUBLE V-PUMP
RK PULL-BACK BALL+PULL-B.	9078214	3	1	146	10 13 802 5	REPAIR KIT DRIVING MECHAN
RK PULL-BACK BALL+PULL-B.	9889988	14	1	130	98 89 984	REPAIR KIT DRIVING MECHAN
RK PULL-BACK BALL+PULL-B.	9889988	14	1	133	98 89 983	REPAIR KIT DRIVING MECHAN
RK1 MAIN BEARING CPL.	10140599	51	1	240	90 76 458	SET MAIN BEARINGS
RK2 MAIN BEARING CPL.	10140603	52	1	240	90 76 458	SET MAIN BEARINGS
ROCKER ARM BRACKET CPL.	10148438	81	6	223	12 42 545 4	DIESEL ENGINE
ROCKER ARM BRACKET PRE	11448005	1	1	245	10 14 843 8	ROCKER ARM BRACKET CPL.
ROCKER ARM PRE-ASSY.	11448000	2	2	246	11 44 800 5	ROCKER ARM BRACKET PRE
ROCKER ST.CONST.	10533999	12	2	83	10 51 969 4	A-FRAME ERECTION CYL INST
ROD	919421714	8	2	641	99 23 405 14	INTERMEDIATE TENSIONING
ROD CPL	11273458	212	2	404	11 27 973 6	CABIN EL
ROD EYE	11918996	90	1	86	59 21 041 14	DOUBLE-ACTING CYL
ROD GUIDE RING	513319814	17	1	460	51 33 141 14	DOUBLE-ACTING CYL
ROD SEAL	10352315	55	1	685	59 21 826 14	SUPPORT CYLINDER
ROD SEAL	726306414	10	1	703	59 20 008 14	DOUBLE-ACTING CYL
ROD SEAL	726307914	10	1	39	51 33 139 14	DOUBLE-ACTING CYL
ROD SEAL	726308514	85	1	685	59 21 826 14	SUPPORT CYLINDER
ROD SEAL	790354114	5	1	716	51 03 361 14	SINGLE-ACTING CYL
ROLLER	11248261	12	1	594	11 24 825 8	ROPE GUIDE ST.CONST. RFK
ROLLER	11256217	19	2	538	11 24 444 4	A-FRAME 1 CPL
ROLLER	970961303	19	1	640	99 10 116 14	ROPE GUIDE
ROLLER BEARING	10522848	3	1	599	79 03 862 14	LOAD HOOK
ROLLER BEARING	10574043	3	1	604	11 27 463 8	HANGER
ROLLER BEARING	11274832	3	1	610	11 27 480 1	HANGER
ROLLER CAGE		16	38	352	93 88 497 01	PLANETARY GEARBOX
ROLLER CARRIER	919022714	25	1	640	99 10 116 14	ROPE GUIDE
ROLLER SET	992339814	82	1	3	01 38 376 14	LR 1300 SX
ROLLER ST.CONST.	971361703	19	1	361	10 51 968 6	LUG SUPERSTRUCTURE CPL
ROLLING TRUCK CPL	11928908	1	2	648	10 55 601 1	FALL PROTECTION CPL
ROOF	10545911	3	1	313	11 24 409 0	PANELLING SUPERSTR. INSTA
ROOF	10545914	5	1	313	11 24 409 0	PANELLING SUPERSTR. INSTA
ROOF	10545916	7	1	313	11 24 409 0	PANELLING SUPERSTR. INSTA
ROOF	10545917	8	1	313	11 24 409 0	PANELLING SUPERSTR. INSTA
ROOF	10545957	11	1	313	11 24 409 0	PANELLING SUPERSTR. INSTA
ROOF	10545958	12	1	313	11 24 409 0	PANELLING SUPERSTR. INSTA
ROOF	10545968	3	1	329	10 54 591 0	MOTOR COWLING
ROOF	10545969	4	1	329	10 54 591 0	MOTOR COWLING
ROOF	10545970	5	1	329	10 54 591 0	MOTOR COWLING
ROOF	10546335	6	1	329	10 54 591 0	MOTOR COWLING
ROOF	10563073	16	1	313	11 24 409 0	PANELLING SUPERSTR. INSTA
ROOF	10563099	1	1	329	10 54 591 0	MOTOR COWLING
ROOF	11244758	14	1	313	11 24 409 0	PANELLING SUPERSTR. INSTA
ROOF	11244865	13	1	313	11 24 409 0	PANELLING SUPERSTR. INSTA
ROOF RAILING RFK	10553721	553	1	3	01 38 376 14	LR 1300 SX
ROOF WINDOW	592288614	44	1	419	10 35 008 0	CABIN
ROPE	773400508	18	0.6	637	11 27 109 7	LIGHTNING ROD RFK
ROPE	774730714	12	40	358	99 23 387 14	ROPES LUG NEEDLE BOOM
ROPE	774762314	11	1	618	10 51 743 9	ROPE LUG CPL RFK
ROPE CLAMP	540271714	5	1	626	54 02 702 14	ROPE DRUM CPL
ROPE CLAMP	773910114	19	2	637	11 27 109 7	LIGHTNING ROD RFK
ROPE DRUM	10555973	2	1	365	10 55 156 3	WINCH
ROPE DRUM	11231269	2	1	489	10 53 039 8	WINCH
ROPE DRUM	540273314	1	1	626	54 02 702 14	ROPE DRUM CPL
ROPE DRUM	938850001	1	1	349	96 96 248 01	WINCH
ROPE DRUM CPL	540270214	21	1	624	59 20 694 14	WINCH
ROPE FIXING POINT	11481158	5	1	601	79 04 112 14	BOTTOM HOOK BLOCK

Description	Item	Pos.	Quantity	Sheet	Assembly	Description
ROPE FIXING POINT	11491267	5	1	608	79 05 205 14	BOTTOM HOOK BLOCK
ROPE FIXING POINT STRAP	970827603	9	1	370	99 29 258 14	LUG SHEAVE SET
ROPE GUARD	11238277	17	1	650	11 29 473 7	GANGWAY INTERM. SECTION
ROPE GUARD	11238277	18	2	654	11 29 474 2	GANGWAY INTERM. SECTION
ROPE GUARD	11238277	20	4	655	11 29 474 3	GANGWAY INTERM. SECTION
ROPE GUARD	11238277	22	2	657	10 55 514 8	FALL PROTECTION RFK
ROPE GUARD	11274800	6	1	608	79 05 205 14	BOTTOM HOOK BLOCK
ROPE GUARD	11481159	6	1	601	79 04 112 14	BOTTOM HOOK BLOCK
ROPE GUARD CPL	11287255	12	1	549	11 24 570 3	BOOM INTERMEDIATE SECTIO
ROPE GUARD CPL	11287255	12	2	567	11 24 570 9	BOOM INTERMEDIATE SECTIO
ROPE GUARD CPL	11287255	12	4	574	11 24 571 5	BOOM INTERMEDIATE SECTIO
ROPE GUARD LUG CPL	992925914	12	1	361	10 51 968 6	LUG SUPERSTRUCTURE CPL
ROPE GUARD LUG CPL	993353714	1	1	371	99 29 259 14	ROPE GUARD LUG CPL
ROPE GUARD ST.CONST.	993522914	20	1	590	99 23 398 14	ROLLER SET
ROPE GUARD TUBE	956809314	36	2	590	99 23 398 14	ROLLER SET
ROPE GUARD TUBE	956809514	21	1	590	99 23 398 14	ROLLER SET
ROPE GUARD TUBE	959841814	25	2	538	11 24 444 4	A-FRAME 1 CPL
ROPE GUIDE	991011614	605	1	3	01 38 376 14	LR 1300 SX
ROPE GUIDE ST.CONST. RFK	11248258	23	1	593	99 48 521 14	TIP BOOM CPL
ROPE GUIDE WELD.CONST.	991011714	10	1	640	99 10 116 14	ROPE GUIDE
ROPE LEFT	11227045	10	1	381	11 22 703 7	ROPES LUG MAIN BOOM
ROPE LEFT	790517014	122	1	3	01 38 376 14	LR 1300 SX
ROPE LEFT	790517214	121	1	3	01 38 376 14	LR 1300 SX
ROPE LUG CPL RFK	10517439	550	1	3	01 38 376 14	LR 1300 SX
ROPE MOUNTING RFK	11236266	680	2	4	01 38 376 14	LR 1300 SX
ROPE PROTECTION ROD	10576718	12	2	608	79 05 205 14	BOTTOM HOOK BLOCK
ROPE PROTECTION ROD	10814912	12	2	601	79 04 112 14	BOTTOM HOOK BLOCK
ROPE PULL	592286314	26	1	423	10 35 007 6	SLIDING DOOR
ROPE PULLEY	10504352	1	1	601	79 04 112 14	BOTTOM HOOK BLOCK
ROPE PULLEY	10504352	1	5	608	79 05 205 14	BOTTOM HOOK BLOCK
ROPE PULLEY	967217003	1	1	623	96 72 161 03	ROPE PULLEY CPL
ROPE PULLEY CPL	790202014	10	10	590	99 23 398 14	ROLLER SET
ROPE PULLEY CPL	790202014	22	1	593	99 48 521 14	TIP BOOM CPL
ROPE PULLEY CPL	790202014	1	1	598	91 89 071 14	TIP BOOM MODIFICATION
ROPE PULLEY CPL	914690714	4	12	370	99 29 258 14	LUG SHEAVE SET
ROPE PULLEY CPL	914690714	13	13	538	11 24 444 4	A-FRAME 1 CPL
ROPE PULLEY CPL	914941914	13	4	640	99 10 116 14	ROPE GUIDE
ROPE PULLEY CPL	915523714	12	1	590	99 23 398 14	ROLLER SET
ROPE PULLEY CPL	915523714	12	1	640	99 10 116 14	ROPE GUIDE
ROPE PULLEY CPL	919279914	11	3	590	99 23 398 14	ROLLER SET
ROPE PULLEY CPL	967216103	14	2	618	10 51 743 9	ROPE LUG CPL RFK
ROPE REEVING WINCH HYDR	10542516	2	1	618	10 51 743 9	ROPE LUG CPL RFK
ROPE RIGHT	10227828	10	1	358	99 23 387 14	ROPES LUG NEEDLE BOOM
ROPE SHEAVE	11271491	1	1	602	10 50 435 2	ROPE PULLEY
ROPES LUG MAIN BOOM	11227037	26	1	2	01 38 376 14	LR 1300 SX
ROPES LUG NEEDLE BOOM	992338714	24	1	2	01 38 376 14	LR 1300 SX
ROTARY FEED THROUGH HYD	10550970	2	1	446	11 89 300 5	TUBING HYDR
ROTARY LOCK	592285814	4	1	423	10 35 007 6	SLIDING DOOR
ROTARY SHAFT LIP SEAL		11	1	352	93 88 497 01	PLANETARY GEARBOX
ROTARY SHAFT LIP SEAL		63	2	352	93 88 497 01	PLANETARY GEARBOX
ROTARY SHAFT LIP SEAL	10014510	35	1	136	92 68 016	REPAIR KIT LOCK RING
ROTARY SHAFT LIP SEAL	11950212	53	1	380	99 04 645 14	DRIVE
ROTARY SHAFT LIP SEAL	710022201	64	2	396	90 01 376 2	SLEWING GEAR DRIVE
ROTARY SHAFT LIP SEAL	710029801	18	1	350	93 88 500 01	ROPE DRUM
ROTARY SHAFT LIP SEAL	710048501	17	1	350	93 88 500 01	ROPE DRUM
ROTARY SHAFT LIP SEAL	710054401	4	1	396	90 01 376 2	SLEWING GEAR DRIVE
ROTARY SHAFT LIP SEAL	710058901	11	2	396	90 01 376 2	SLEWING GEAR DRIVE
ROTATABLE BEAM	11274675	2	1	604	11 27 463 8	HANGER
ROTATABLE BEAM	11274831	2	1	610	11 27 480 1	HANGER
ROTATING BAR CPL	10020161	6	2	321	10 57 883 5	DOOR

Description	Item	Pos.	Quantity	Sheet	Assembly	Description
ROTATING BAR CPL	10020161	12	2	323	10 57 897 6	DOOR
ROTATING BAR CPL	10020161	9	1	325	10 57 940 0	DOOR
ROTATING BAR CPL	10020161	9	2	326	10 56 623 7	DOOR
ROTATING BAR CPL	10020161	12	2	327	10 56 580 8	DOOR
ROTATIONAL SPEED SENSOR	10133077	20	2	306	10 14 297 7	ENGINE CONTROL SENSORS
ROUND SLING	10222935	92	2	504	10 56 187 5	TOOL EQUIPMENT
ROUND SLING	10280543	27	4	666	11 23 619 7	SELF-LOADING SYSTEM RFK
ROUND SLING	790269114	93	1	504	10 56 187 5	TOOL EQUIPMENT
ROUND SLING	790365114	29	1	666	11 23 619 7	SELF-LOADING SYSTEM RFK
ROUND STEEL	954584908	17	144	467	11 89 365 0	CRAWLER CARRIER RIGHT CP
ROUND STEEL	954584908	17	144	478	11 89 365 1	CRAWLER CARRIER LEFT CP
RS FLANGE	9077464	1	2	126	10 13 975 2	REPAIR SET SWIVEL YOKE
RUBBER	10522190	5	1	426	59 22 871 14	FRONT WINDOW CPL
RUBBER	10535526	12	1	545	99 29 588 14	SUPPORT
RUBBER	10535526	12	2	546	10 35 063 3	FASTENER
RUBBER	10540082	68	2	510	11 23 820 3	PIVOT PIECE CPL
RUBBER	11269800	9	1	195	11 24 114 0	COOLER INSTALLATION WATE
RUBBER	11285382	11	1	553	11 28 391 3	FIXING CLAMP
RUBBER	289058614	5	0.016	79	10 56 067 3	BATTERY INSTALLATION CPL
RUBBER	289058614	8	0.08	79	10 56 067 3	BATTERY INSTALLATION CPL
RUBBER	289058614	9	0.023	79	10 56 067 3	BATTERY INSTALLATION CPL
RUBBER BELLOWS	10100666	40	1	434	10 22 506 8	OPERATOR SEAT
RUBBER BELLOWS	606272314	1	1	409	11 21 481 8	MASTER SWITCH
RUBBER BELLOWS	7366620	42	1	434	10 22 506 8	OPERATOR SEAT
RUBBER BUFFER	11903519	1	4	707	11 23 671 4	FRAME
RUBBER CONNECTION	10123671	3	1	239	10 14 671 6	OIL LINE PRE-ASSEMBLY
RUBBER CONNECTION	10126090	4	1	232	10 14 201 8	CRANKCASE BREATHER ASS
RUBBER CONNECTION	10126091	2	1	232	10 14 201 8	CRANKCASE BREATHER ASS
RUBBER CONNECTION	10126317	7	1	239	10 14 671 6	OIL LINE PRE-ASSEMBLY
RUBBER CONNECTION	10128228	9	4	294	10 14 622 4	REGULATION BOOST PRESS
RUBBER CONNECTION	10128875	24	1	292	10 14 013 6	EXHAUST TC MOUNTING
RUBBER CONNECTION	10129904	4	1	276	10 14 967 6	CONNECTING LINE ADD-ON
RUBBER CONNECTION	10133641	3	1	232	10 14 201 8	CRANKCASE BREATHER ASS
RUBBER CONNECTION	9271340	10	1	11	11 92 891 3	COMPRESSOR RFK
RUBBER CONNECTION	9271340	13	1	274	10 14 736 9	INTAKE STACK ASSEMBLY
RUBBER MOUNT	726611214	18	4	483	99 26 718 14	PEDESTAL
RUBBER MOUNT	726612114	50	4	202	11 24 114 1	COOLER INSTALLATION CHA
RUBBER MOUNT	726612214	88	4	511	11 23 820 3	PIVOT PIECE CPL
RUBBER MOUNT	726612214	13	1	554	11 28 397 7	SUMP PAN CPL
RUBBER MOUNT	726612214	13	1	555	11 28 397 8	SUMP PAN CPL
RUBBER MOUNT	726612214	13	1	556	11 28 399 5	SUMP PAN CPL
RUBBER MOUNT	726612214	13	1	557	11 28 399 7	SUMP PAN CPL
RUBBER MOUNT	726613014	20	1	584	10 59 863 3	PENDULUM CPL
RUBBER MOUNT	726613614	30	4	195	11 24 114 0	COOLER INSTALLATION WATE
RUBBER MOUNT	726616208	55	2	633	10 55 372 1	ROOF RAILING RFK
RUBBER MOUNT	726616614	58	10	633	10 55 372 1	ROOF RAILING RFK
RUBBER MOUNT	726902614	21	4	321	10 57 883 5	DOOR
RUBBER MOUNT	726904014	37	1	77	10 58 163 4	CABIN SUSPENSION CPL
RUBBER MOUNT	726910114	19	3	77	10 58 163 4	CABIN SUSPENSION CPL
RUBBER MOUNT	726922114	37	2	593	99 48 521 14	TIP BOOM CPL
RUBBER MOUNT	726922214	13	4	57	10 51 961 6	OIL COOLER INSTALLATION
RUBBER RING	10123876	103	2	305	10 15 028 8	CABLE HARNESS MOUNTING
RUBBER RING	10123877	12	2	184	11 24 448 7	CENTRAL POWER UNIT EL
RUNNING ROLLER CPL	10552633	14	16	467	11 89 365 0	CRAWLER CARRIER RIGHT CP
RUNNING ROLLER CPL	10552633	14	16	478	11 89 365 1	CRAWLER CARRIER LEFT CP
SAFETY ELEMENT	11291030	3	1	209	11 24 679 0	AIR FILTER
SAFETY LEVER CPL	693168514	41	1	408	10 51 907 9	CONTROL STAND LEFT
SAFETY PLUG W HINGE-LID 10	10098106	12	2	442	99 18 041 14	LASHING SUPERSTRUCTURE
SAFETY PLUG W HINGE-LID 10	10098106	45	2	640	99 10 116 14	ROPE GUIDE
SAFETY PLUG W HINGE-LID 4	485565814	2	2	78	99 08 706 14	LADDER MOUNTING

Description	Item	Pos.	Quantity	Sheet	Assembly	Description
SAFETY PLUG W HINGE-LID 4	485565814	12	1	554	11 28 397 7	SUMP PAN CPL
SAFETY PLUG W HINGE-LID 4	485565814	12	1	555	11 28 397 8	SUMP PAN CPL
SAFETY PLUG W HINGE-LID 4	485565814	19	2	559	11 94 087 8	ASSEMBLY UNIT
SAFETY PLUG W HINGE-LID 4	485565814	24	2	584	10 59 863 3	PENDULUM CPL
SAFETY PLUG W HINGE-LID 4	485565814	43	2	640	99 10 116 14	ROPE GUIDE
SAFETY PLUG W HINGE-LID 4	485565814	5	1	642	99 10 125 14	FORK
SAFETY PLUG W HINGE-LID 4	485565814	5	1	644	99 06 789 14	FORK
SAFETY PLUG W HINGE-LID 8	432016214	40	1	77	10 58 163 4	CABIN SUSPENSION CPL
SAFETY ROLLER	939662601	26	1	510	11 23 820 3	PIVOT PIECE CPL
SAFETY ROLLER	969641401	40	1	357	96 96 543 01	WINCH FRAME
SAFETY TRAP	10350190	2	2	612	11 27 482 9	TWIN HOOK CPL
SAFETY TRAP	10350196	2	1	606	11 48 116 2	SINGLE HOOK
SASH LOCK	10581486	15	1	325	10 57 940 0	DOOR
SCR CPL.	11403711	3	1	308	11 90 032 5	EXHAUST GAS SYSTEM
SCRAPER	10352319	60	1	685	59 21 826 14	SUPPORT CYLINDER
SCRAPER	592031814	9	1	703	59 20 008 14	DOUBLE-ACTING CYL
SCRAPER	749073614	90	1	685	59 21 826 14	SUPPORT CYLINDER
SCRAPER RING	726054214	13	1	460	51 33 141 14	DOUBLE-ACTING CYL
SCRAPER RING	726054414	9	1	39	51 33 139 14	DOUBLE-ACTING CYL
SCRAPER RING	790354014	9	1	716	51 03 361 14	SINGLE-ACTING CYL
SCREW	592287514	15	1	426	59 22 871 14	FRONT WINDOW CPL
SCREW CAP	779009008	8	1	264	10 13 508 0	HIGH PRESSURE CONNECTO
SCREW CARABINER	10473040	22	1	591	99 30 800 14	HOIST LIMIT SWITCH INSTAL.
SCREW DIN 7500C M2.5X5.3	7024631	4	2	40	51 16 576 14	TEMPERATURE CONTROLLER
SCREW DIN 931 M8X50 8.8	11236106	19	12	601	79 04 112 14	BOTTOM HOOK BLOCK
SCREW DIN 931 M8X50 8.8	11236106	19	12	608	79 05 205 14	BOTTOM HOOK BLOCK
SCREW FITTING CPL	11253240	900	1	121	90 74 418	REGULATING VALVE
SCREW LOCKING	10547904	10	1	365	10 55 156 3	WINCH
SCREW LOCKING	811202114	104	1	117	10 11 835 0	CONNECTION HOUSING
SCREW LOCKING	811202114	104	1	126	10 13 975 2	REPAIR SET SWIVEL YOKE
SCREW LOCKING	811202114	105	1	235	10 15 529 8	OIL SUMP PRE-ASS.
SCREW LOCKING	811202114	105	1	280	10 14 286 0	AIR COND. COMPRESSOR A
SCREW LOCKING	8655016	105	1	119	10 11 835 7	REPAIR KIT CONNECTION HO
SCREW LOCKING	8655016	105	1	120	92 74 731	SEAL KIT CONNECTING HOUS
SCREW LOCKING	8655016	105	1	153	10 14 131 6	TERMINAL BOARD PRE-ASS.
SCREW LOCKING	8655016	105	1	257	10 14 294 2	LUBE OIL FILTER ASSEMBLY
SCREW LOCKING	8655016	109	1	296	10 12 037 2	STARTER INSTALLATION
SCREW LOCKING	8700012	106	1	134	98 89 832	RK CYLINDER+CONTROL PLAT
SCREW M12X30	11249772	10	3	449	10 55 097 0	ROTARY FEED THROUGH HYD
SCREW M30X1.5X150	10590183	12	4	469	10 55 716 2	GUIDE WHEEL CPL
SCREW PLUG		84	1	353	93 88 497 01	PLANETARY GEARBOX
SCREW PLUG		86	2	353	93 88 497 01	PLANETARY GEARBOX
SCREW PLUG	10041903	10	5	228	10 14 768 6	POWER UNIT SUPPORT ATT
SCREW PLUG	10115232	13	1	455	11 22 473 8	ADJUSTMENT
SCREW PLUG	10116078	4	1	268	10 14 675 3	FUEL FINE FILTER
SCREW PLUG	10137108	40	1	127	90 77 464	RS FLANGE
SCREW PLUG	10137108	29	3	153	10 14 131 6	TERMINAL BOARD PRE-ASS.
SCREW PLUG	10137108	19	1	158	10 13 803 3	SEAL KIT CPL.
SCREW PLUG	10137108	30	3	159	10 13 803 4	GASKET KIT INT.FLANGE
SCREW PLUG	10137113	20	3	158	10 13 803 3	SEAL KIT CPL.
SCREW PLUG	10137113	24	4	159	10 13 803 4	GASKET KIT INT.FLANGE
SCREW PLUG	10137115	27	2	153	10 14 131 6	TERMINAL BOARD PRE-ASS.
SCREW PLUG	10137115	27	2	159	10 13 803 4	GASKET KIT INT.FLANGE
SCREW PLUG	10137121	28	2	115	10 11 834 9	DOUBLE V-PUMP
SCREW PLUG	10137121	29	2	138	92 76 408	SEAL KIT DOUBLE PUMP
SCREW PLUG	10137121	21	1	139	10 12 878 7	V PUMP
SCREW PLUG	10137312	20	1	153	10 14 131 6	TERMINAL BOARD PRE-ASS.
SCREW PLUG	10137312	20	1	159	10 13 803 4	GASKET KIT INT.FLANGE
SCREW PLUG	10519025	30	1	455	11 22 473 8	ADJUSTMENT
SCREW PLUG	10598295	55	4	202	11 24 114 1	COOLER INSTALLATION CHA

Description	Item	Pos.	Quantity	Sheet	Assembly	Description
SCREW PLUG	10598295	20	2	718	11 31 446 3	CHARGE AIR PIPE CPL
SCREW PLUG	11217837	30	1	168	11 22 127 4	PUMP ELEMENT
SCREW PLUG	11224761	7	1	455	11 22 473 8	ADJUSTMENT
SCREW PLUG	11267402	20	1	106	11 21 993 0	PUMP HOUSING
SCREW PLUG	11267403	28	1	106	11 21 993 0	PUMP HOUSING
SCREW PLUG	11267415	1	1	107	10 59 347 4	PRESSURE LIMITING VALVE
SCREW PLUG	11267421	1	1	108	11 21 936 9	LOCKING SET
SCREW PLUG	11267439	1	1	109	11 06 730 4	SHUTDOWN VALVE
SCREW PLUG	11267451	1	1	111	11 26 744 7	SHUTTLE VALVE
SCREW PLUG	477510201	2	4	396	90 01 376 2	SLEWING GEAR DRIVE
SCREW PLUG	592316314	210	1	98	11 24 682 0	DISTRIBUTOR GEARBOX
SCREW PLUG	7361961	28	1	356	93 36 755 01	OIL-GAUGING INSTRUMENT
SCREW PLUG	7380177	4	3	226	11 38 961 7	CRANKCASE CPL. WITH CYLIN
SCREW PLUG	7380566	6	3	226	11 38 961 7	CRANKCASE CPL. WITH CYLIN
SCREW PLUG	7380566	12	1	252	10 12 948 0	OIL COOLER, PRE-ASSEMBLE
SCREW PLUG	7380566	7	1	274	10 14 736 9	INTAKE STACK ASSEMBLY
SCREW PLUG	7380566	20	1	292	10 14 013 6	EXHAUST TC MOUNTING
SCREW PLUG	7380688	3	2	268	10 14 675 3	FUEL FINE FILTER
SCREW PLUG	7381457	7	2	226	11 38 961 7	CRANKCASE CPL. WITH CYLIN
SCREW PLUG	7381457	17	1	274	10 14 736 9	INTAKE STACK ASSEMBLY
SCREW PLUG	7381457	21	1	292	10 14 013 6	EXHAUST TC MOUNTING
SCREW PLUG	7381638	9	2	14	11 41 475 7	ACCESSORIES AIR COMPRES
SCREW PLUG	7381638	11	1	252	10 12 948 0	OIL COOLER, PRE-ASSEMBLE
SCREW PLUG	7381638	13	1	276	10 14 967 6	CONNECTING LINE ADD-ON
SCREW PLUG	7381638	10	2	299	10 11 557 7	FLYWHEEL HOUSING MOUNT
SCREW PLUG	7381638	4	1	307	10 14 637 4	LOCKING PIECES
SCREW PLUG	7382203	5	2	307	10 14 637 4	LOCKING PIECES
SCREW PLUG	7382204	8	2	252	10 12 948 0	OIL COOLER, PRE-ASSEMBLE
SCREW PLUG	7414500	24	3	455	11 22 473 8	ADJUSTMENT
SCREW PLUG	933676601	23	1	356	93 36 755 01	OIL-GAUGING INSTRUMENT
SCREW PLUG 11SMNPB30+C	10137918	2	1	229	10 13 845 0	FINAL CONTROL VALVE
SCREW PLUG 3/4"-16UNF	10008093	5	1	175	10 22 601 3	V PUMP
SCREW PLUG 3/4"-16UNF	10008093	30	1	177	11 21 593 6	PUMP ELEMENT
SCREW PLUG 7/16-20UNF-2A	10324900	4	1	171	10 35 160 3	CONTROL VALVE
SCREW PLUG AEHNL.DIN 908	409710601	67	3	471	96 93 178 01	TRACTION DRIVE
SCREW PLUG D26X26 G1/2"	505105814	250	2	98	11 24 682 0	DISTRIBUTOR GEARBOX
SCREW PLUG DIN 906 M10X1	403900101	80	1	627	54 02 703 14	FLANGE CPL
SCREW PLUG DIN 906 M10X1	403900101	43	4	681	11 89 568 6	SELF-LOADING SYSTEM RFK
SCREW PLUG DIN 906 ST	403900501	22	1	153	10 14 131 6	TERMINAL BOARD PRE-ASS.
SCREW PLUG DIN 908 G1/2	11239915	3	1	671	51 16 404 14	LOWERING BRAKE VALVE
SCREW PLUG DIN 908 G1/8	11239904	5	1	673	59 21 584 14	LOWERING BRAKE VALVE
SCREW PLUG DIN 908 G3/8	11239897	4	1	673	59 21 584 14	LOWERING BRAKE VALVE
SCREW PLUG DIN 908 M10X1	502027614	60	2	380	99 04 645 14	DRIVE
SCREW PLUG DIN 908 M12X1.	502027514	122	1	380	99 04 645 14	DRIVE
SCREW PLUG DIN 908 M18X1.	4600320	64	1	380	99 04 645 14	DRIVE
SCREW PLUG DIN 908 M22X1.5	404101608	30	2	626	54 02 702 14	ROPE DRUM CPL
SCREW PLUG DIN 910 R1/2" 5.	4000898	480	9	98	11 24 682 0	DISTRIBUTOR GEARBOX
SCREW PLUG G1/2"-ED	11226023	60	2	387	51 14 347 14	SG SAFETY BLOCK
SCREW PLUG G1/4"-ED	11226129	150	1	387	51 14 347 14	SG SAFETY BLOCK
SCREW PLUG G1/8"-ED	11226130	160	1	387	51 14 347 14	SG SAFETY BLOCK
SCREW PLUG G3/8"-ED	11226133	165	1	387	51 14 347 14	SG SAFETY BLOCK
SCREW PLUG M10X1	10115237	28	2	177	11 21 593 6	PUMP ELEMENT
SCREW PLUG M10X1	10115237	25	4	455	11 22 473 8	ADJUSTMENT
SCREW PLUG M14X1.5 NBR	10337050	4	1	102	11 21 992 7	COVER
SCREW PLUG M14X1.5 NBR	10337050	4	1	103	11 21 992 9	COVER
SCREW PLUG M14X1.5 NBR	10337050	12	1	106	11 21 993 0	PUMP HOUSING
SCREW PLUG M14X1.5 NBR	10337050	13	1	106	11 21 993 0	PUMP HOUSING
SCREW PLUG M14X1.5 NBR	10337050	14	1	106	11 21 993 0	PUMP HOUSING
SCREW PLUG M14X1.5 NBR	10337050	15	1	106	11 21 993 0	PUMP HOUSING
SCREW PLUG M14X1.5 NBR	10337050	16	1	106	11 21 993 0	PUMP HOUSING

Description	Item	Pos.	Quantity	Sheet	Assembly	Description
SCREW PLUG M14X1.5 NBR	10337050	17	1	106	11 21 993 0	PUMP HOUSING
SCREW PLUG M14X1.5 NBR	10337050	18	1	106	11 21 993 0	PUMP HOUSING
SCREW PLUG M14X1.5 NBR	10337050	26	1	114	11 21 991 8	BEARING FLANGE
SCREW PLUG M14X1.5 ST	7371299	279	2	30	11 28 647 6	VALVE BLOCK
SCREW PLUG M14X1.5X41	11234068	275	16	30	11 28 647 6	VALVE BLOCK
SCREW PLUG M18X1.5 NBR	10337052	21	1	106	11 21 993 0	PUMP HOUSING
SCREW PLUG M22X1.5	10340236	19	2	215	10 30 300 7	FUEL PREFILTER
SCREW PLUG M22X1.5	10349193	22	1	106	11 21 993 0	PUMP HOUSING
SCREW PLUG M22X1.5	10349193	23	1	106	11 21 993 0	PUMP HOUSING
SCREW PLUG M24X1.5X20	7024504	172	14	30	11 28 647 6	VALVE BLOCK
SCREW PLUG M26X1.5	10503477	13	1	451	51 24 059 14	VARIABLE DISPLACEMENT MO
SCREW PLUG M30X40 ETG 10	10152594	2	1	253	10 15 259 2	OVERPRESSURE VALVE
SCREW PLUG M33X2 NBR	10289931	24	1	106	11 21 993 0	PUMP HOUSING
SCREW PLUG M39X1.5X36.5	10228470	167	5	30	11 28 647 6	VALVE BLOCK
SCREW PLUG M39X1.5X36.5	10301757	169	2	30	11 28 647 6	VALVE BLOCK
SCREW PLUG M48X2	10525039	42	1	106	11 21 993 0	PUMP HOUSING
SCREW PLUG M48X2	9885660	16	2	117	10 11 835 0	CONNECTION HOUSING
SCREW PLUG M6	9268441	8	3	122	92 73 644	SEAL KIT REGULATING VALVE
SCREW PLUG M6	9268441	8	5	153	10 14 131 6	TERMINAL BOARD PRE-ASS.
SCREW PLUG M6	9268441	8	5	159	10 13 803 4	GASKET KIT INT.FLANGE
SCREW PLUG M8X1	9881609	7	2	153	10 14 131 6	TERMINAL BOARD PRE-ASS.
SCREW PLUG M8X1	9881609	8	2	158	10 13 803 3	SEAL KIT CPL.
SCREW PLUG M8X1	9881609	7	2	159	10 13 803 4	GASKET KIT INT.FLANGE
SCREW UN 1206 M10X30	10502692	5	1	47	10 53 048 9	FUSE HOLDER
SEAL	10115623	18	1	292	10 14 013 6	EXHAUST TC MOUNTING
SEAL	10117891	2	1	251	10 12 948 1	OIL COOLER ADD-ON
SEAL	10118556	2	6	273	10 14 736 6	AIR INTAKE PIPE ASS.
SEAL	10119923	3	2	252	10 12 948 0	OIL COOLER, PRE-ASSEMBLE
SEAL	10125740	3	1	292	10 14 013 6	EXHAUST TC MOUNTING
SEAL	10126427	3	1	234	10 14 844 4	OIL SUMP WITH FASTENING
SEAL	10126510	2	1	247	10 13 475 1	CYLINDER HEAD COVER ASS
SEAL	10126510	2	1	248	10 12 653 5	CYLINDER HEAD COVER ASS
SEAL	10126510	3	1	250	10 13 469 6	CYLINDER HEAD COVER ASS
SEAL	10126738	2	1	228	10 14 768 6	POWER UNIT SUPPORT ATT
SEAL	10135885	2	6	289	10 14 144 4	EXHAUST PIPE ASSEMBLY
SEAL	10137721	5	1	299	10 11 557 7	FLYWHEEL HOUSING MOUNT
SEAL	10144102	31	1	308	11 90 032 5	EXHAUST GAS SYSTEM
SEAL	10144861	14	1	217	11 24 114 5	ASSEMBLY INSTAL.
SEAL	10294171	4	1	215	10 30 300 7	FUEL PREFILTER
SEAL	10297876	2	1	171	10 35 160 3	CONTROL VALVE
SEAL	10297876	2	1	180	10 11 497 5	CONTROL VALVE
SEAL	11250971	2	1	425	11 25 097 0	SLIDING WINDOW
SEAL	11251434	6	1	450	11 89 617 8	SEALING SET
SEAL	552006114	26	2	60	10 56 070 1	TANK HYDR CPL
SEAL	7011131	2	1	236	50 04 624	OIL DRAIN PLUG
SEAL	7412935	18	1	215	10 30 300 7	FUEL PREFILTER
SEAL	790230014	9	2	702	10 51 728 1	TUBING HYDR
SEAL	9079130	2	1	300	10 11 912 8	LOCKING PIECES
SEAL	9144762	3	1	249	91 44 757	END COVER
SEAL	9271963	11	2	718	11 31 446 3	CHARGE AIR PIPE CPL
SEAL	9275428	76	1	122	92 73 644	SEAL KIT REGULATING VALVE
SEAL	9275428	76	1	129	92 75 443	REPAIR SET LID
SEAL	9882207	15	2	115	10 11 834 9	DOUBLE V-PUMP
SEAL	9882207	15	2	138	92 76 408	SEAL KIT DOUBLE PUMP
SEAL KIT	10215808	999	1	531	51 04 292 14	DIRECTIONAL CONTROL VALV
SEAL KIT CONNECTING HOUS	9274731	91	1	117	10 11 835 0	CONNECTION HOUSING
SEAL KIT CPL.	10138033	90	1	139	10 12 878 7	V PUMP
SEAL KIT CPL.	512402214	990	1	363	51 22 942 14	OIL MOTOR
SEAL KIT DOUBLE PUMP	9276408	98	1	116	10 11 834 9	DOUBLE V-PUMP
SEAL KIT DRIVE SHAFT	512416214	98	1	452	10 50 351 3	DRIVING GEAR

Description	Item	Pos.	Quantity	Sheet	Assembly	Description
SEAL KIT GEAR WHEEL MOTO	10493890	901	1	44	55 09 453 14	OIL MOTOR
SEAL KIT HIGH PRESS.CONN	10141216	210	1	262	10 15 315 1	HIGH PRESSURE CONNECTO
SEAL KIT HIGH PRESS.CONN	10141216	12	1	263	10 14 114 0	RK HIGH PRESSURE CONNEC
SEAL KIT HIGH PRESSURE P	10152787	210	1	258	10 15 085 7	HIGH PRESSURE PUMP W.FA
SEAL KIT HIGH PRESSURE P	10152787	4	1	259	10 15 074 3	RK HIGH PRESSURE PUMP
SEAL KIT INJECTOR	10141215	210	1	261	10 15 286 7	INJECTOR WITH FASTENING
SEAL KIT PRESSUR.CONTROL	10123210	4	2	159	10 13 803 4	GASKET KIT INT.FLANGE
SEAL KIT PRESSUR.CONTROL	10123214	90	1	142	10 12 942 0	PRESSURE REDUCTION VALV
SEAL KIT PRESSURE VALVE	10332095	90	1	155	10 12 323 6	PRESSURE FEEDER VALVE
SEAL KIT PRESSURE VALVE	10332095	2	2	159	10 13 803 4	GASKET KIT INT.FLANGE
SEAL KIT REGULATING VALVE	10122265	4	1	158	10 13 803 3	SEAL KIT CPL.
SEAL KIT REGULATING VALVE	9273644	89	1	115	10 11 834 9	DOUBLE V-PUMP
SEAL KIT REGULATING VALVE	9273644	90	1	121	90 74 418	REGULATING VALVE
SEALANT	8627609	109	1	235	10 15 529 8	OIL SUMP PRE-ASS.
SEALING FLANGE SAE	11293256	44	4	20	11 29 618 6	SUPERSTRUCTURE HYDR
SEALING FLANGE SAE	11293256	15	1	191	10 57 532 2	INTAKE PIPE OIL CPL
SEALING FLANGE SAE	510705314	43	2	20	11 29 618 6	SUPERSTRUCTURE HYDR
SEALING MODULE	602453214	5	2	415	91 65 251 14	CABLE DUCT CABINET 1
SEALING MODULE	602453914	8	2	415	91 65 251 14	CABLE DUCT CABINET 1
SEALING MODULE	602454614	2	2	415	91 65 251 14	CABLE DUCT CABINET 1
SEALING MODULE	602454714	4	2	415	91 65 251 14	CABLE DUCT CABINET 1
SEALING MODULE	602457014	3	2	415	91 65 251 14	CABLE DUCT CABINET 1
SEALING MODULE	602457114	6	2	415	91 65 251 14	CABLE DUCT CABINET 1
SEALING MODULE	602457214	7	2	415	91 65 251 14	CABLE DUCT CABINET 1
SEALING NUT M12X1.75	7005072	18	2	451	51 24 059 14	VARIABLE DISPLACEMENT MO
SEALING PLUG		2	1	352	93 88 497 01	PLANETARY GEARBOX
SEALING PLUG		9	3	352	93 88 497 01	PLANETARY GEARBOX
SEALING PLUG	10030837	14	14	226	11 38 961 7	CRANKCASE CPL. WITH CYLIN
SEALING PLUG	10036325	8	1	246	11 44 800 5	ROCKER ARM BRACKET PRE
SEALING PLUG	10465711	15	1	228	10 14 768 6	POWER UNIT SUPPORT ATT
SEALING PLUG	10465711	11	1	288	10 14 601 2	MANIFOLD FOR WATER CPL.
SEALING PLUG	11389287	3	2	271	10 14 382 8	INJECTION LINES
SEALING PLUG	605614714	14	2	722	10 52 957 6	REFUELLING PUMP CPL
SEALING PLUG	7008121	24	4	153	10 14 131 6	TERMINAL BOARD PRE-ASS.
SEALING PLUG	7380480	7	1	471	96 93 178 01	TRACTION DRIVE
SEALING PLUG	7380490	23	2	153	10 14 131 6	TERMINAL BOARD PRE-ASS.
SEALING PLUG	7380779	16	2	256	10 13 382 3	SUCTION PUMP PRE-ASS.
SEALING PLUG	7382069	8	1	226	11 38 961 7	CRANKCASE CPL. WITH CYLIN
SEALING PROFILE	11918670	13	4	321	10 57 883 5	DOOR
SEALING PROFILE	11918670	11	4.1	323	10 57 897 6	DOOR
SEALING PROFILE	11918670	13	2.6	325	10 57 940 0	DOOR
SEALING PROFILE	11918670	13	1.35	326	10 56 623 7	DOOR
SEALING PROFILE	11918670	11	2.8	327	10 56 580 8	DOOR
SEALING RING		81	1	352	93 88 497 01	PLANETARY GEARBOX
SEALING RING		87	1	353	93 88 497 01	PLANETARY GEARBOX
SEALING RING	10011864	8	2	14	11 41 475 7	ACCESSORIES AIR COMPRES
SEALING RING	10011864	6	17	270	10 14 588 5	LEAK OIL RETURN LINE
SEALING RING	10011864	7	2	294	10 14 622 4	REGULATION BOOST PRESS
SEALING RING	10011865	5	2	260	10 15 278 7	SEAL KIT HIGH PRESSURE P
SEALING RING	10011865	11	2	270	10 14 588 5	LEAK OIL RETURN LINE
SEALING RING	10011866	19	3	270	10 14 588 5	LEAK OIL RETURN LINE
SEALING RING	10011866	2	11	285	10 14 821 7	PIPELINE INSTALLATION
SEALING RING	10011866	6	1	287	10 14 274 4	COOLING WATER AIR BLEED
SEALING RING	10011867	4	8	14	11 41 475 7	ACCESSORIES AIR COMPRES
SEALING RING	10011867	16	2	293	10 14 511 2	EXHAUST NOZZLE ATTACHM
SEALING RING	10011868	2	1	238	10 13 451 7	LEVEL SENSOR
SEALING RING	10011868	6	4	260	10 15 278 7	SEAL KIT HIGH PRESSURE P
SEALING RING	10011868	7	14	269	10 14 333 9	FUEL LINES
SEALING RING	10011870	13	1	11	11 92 891 3	COMPRESSOR RFK
SEALING RING	10011870	8	1	274	10 14 736 9	INTAKE STACK ASSEMBLY

Description	Item	Pos.	Quantity	Sheet	Assembly	Description
SEALING RING	10011870	27	1	292	10 14 013 6	EXHAUST TC MOUNTING
SEALING RING	10011871	14	2	270	10 14 588 5	LEAK OIL RETURN LINE
SEALING RING	10113731	3	1	253	10 15 259 2	OVERPRESSURE VALVE
SEALING RING	10285620	25	2	119	10 11 835 7	REPAIR KIT CONNECTION HO
SEALING RING	10285620	27	2	120	92 74 731	SEAL KIT CONNECTING HOUS
SEALING RING	11226035	80	1	387	51 14 347 14	SG SAFETY BLOCK
SEALING RING	11226086	92	1	387	51 14 347 14	SG SAFETY BLOCK
SEALING RING	4900262	32	7	195	11 24 114 0	COOLER INSTALLATION WATE
SEALING RING	7013116	22	1	122	92 73 644	SEAL KIT REGULATING VALVE
SEALING RING	7013116	22	1	125	92 78 875	PRESSURE CUT-OFF
SEALING RING	710004514	5	4	582	11 28 610 5	RETAINING DEVICE CPL
SEALING RING	710020114	15	1	629	54 02 705 14	DRIVE UNIT CPL
SEALING RING	710031014	10	1	628	54 02 704 14	POWER TAKE-OFF CPL
SEALING RING	710069314	11	1	486	11 26 260 6	WINCH 1 HYDR
SEALING RING	710069314	11	1	501	11 26 261 1	WINCH 2 HYDR
SEALING RING	7101008	5	1	235	10 15 529 8	OIL SUMP PRE-ASS.
SEALING RING	7101021	3	1	229	10 13 845 0	FINAL CONTROL VALVE
SEALING RING	7101021	7	1	235	10 15 529 8	OIL SUMP PRE-ASS.
SEALING RING	7101021	10	1	236	50 04 624	OIL DRAIN PLUG
SEALING RING	7101022	23	4	60	10 56 070 1	TANK HYDR CPL
SEALING RING	7101022	33	1	195	11 24 114 0	COOLER INSTALLATION WATE
SEALING RING	710102514	56	4	202	11 24 114 1	COOLER INSTALLATION CHA
SEALING RING	710102514	10	2	718	11 31 446 3	CHARGE AIR PIPE CPL
SEALING RING	710103714	34	1	195	11 24 114 0	COOLER INSTALLATION WATE
SEALING RING	710103814	5	4	85	10 51 969 5	A-FRAME ERECTION HYDR
SEALING RING	710104514	48	1	8	11 92 958 8	AIR DUCT CPL
SEALING RING	710104514	31	2	626	54 02 702 14	ROPE DRUM CPL
SEALING RING	710121014	123	1	380	99 04 645 14	DRIVE
SEALING RING	7381225	14	1	228	10 14 768 6	POWER UNIT SUPPORT ATT
SEALING RING	7381225	13	1	252	10 12 948 0	OIL COOLER, PRE-ASSEMBLE
SEALING RING	7381367	2	1	121	90 74 418	REGULATING VALVE
SEALING RING	7381367	94	2	122	92 73 644	SEAL KIT REGULATING VALVE
SEALING RING	7610225	14	1	356	93 36 755 01	OIL-GAUGING INSTRUMENT
SEALING RING	7610225	6	1	398	92 76 934 01	OIL FILLER NECK
SEALING RING	761022903	2	1	356	93 36 755 01	OIL-GAUGING INSTRUMENT
SEALING RING	761022903	21	1	356	93 36 755 01	OIL-GAUGING INSTRUMENT
SEALING RING	790295414	61	2	380	99 04 645 14	DRIVE
SEALING RING	790347114	550	11	98	11 24 682 0	DISTRIBUTOR GEARBOX
SEALING RING	790347214	560	1	98	11 24 682 0	DISTRIBUTOR GEARBOX
SEALING RING	790403914	310	1	98	11 24 682 0	DISTRIBUTOR GEARBOX
SEALING RING	790444514	65	1	380	99 04 645 14	DRIVE
SEALING RING COVER	592178514	20	1	98	11 24 682 0	DISTRIBUTOR GEARBOX
SEALING SCREW	11220932	4	1	166	10 22 650 5	V PUMP
SEALING SCREW	11221267	5	1	166	10 22 650 5	V PUMP
SEALING SET	10423993	900	1	37	10 59 143 5	DIRECTIONAL CONTROL VALV
SEALING SET	10524595	1	1	34	10 35 148 6	VALVE BLOCK
SEALING SET	11219356	4	1	100	11 21 990 2	DRIVING GEAR
SEALING SET	11896178	900	1	449	10 55 097 0	ROTARY FEED THROUGH HYD
SEALING SET	511493914	51	2	346	51 22 527 14	OIL MOTOR
SEALING SET	511614214	61	1	363	51 22 942 14	OIL MOTOR
SEALING SET	512259414	990	1	346	51 22 527 14	OIL MOTOR
SEALING SET	512259514	61	1	346	51 22 527 14	OIL MOTOR
SEALING SET	512401514	51	2	363	51 22 942 14	OIL MOTOR
SEALING SET	512714614	10	1	397	50 20 383 01	MULTI-DISK BRAKE
SEALING SET	512714614	9	1	400	93 93 479 01	BRAKE PACKING SET
SEALING SET	512714714	11	1	397	50 20 383 01	MULTI-DISK BRAKE
SEALING SET	512714714	10	1	400	93 93 479 01	BRAKE PACKING SET
SEALING SET	790413614	990	1	33	59 23 090 14	PRESSURE LIMITING CARTRI
SEALING SET	790545514	900	1	31	59 20 707 14	RESTRICTOR VALVE
SEALING SET	790545514	900	1	32	59 23 006 14	SOLENOID VALVE

Description	Item	Pos.	Quantity	Sheet	Assembly	Description
SEALING SET CPL	10224159	3	1	183	10 22 358 1	PRESSURE FILTER
SEALING SET CPL	10351610	99	1	166	10 22 650 5	V PUMP
SEALING SET CPL	10595126	200	1	365	10 55 156 3	WINCH
SEALING SET CPL	11904703	900	1	686	59 21 826 14	SUPPORT CYLINDER
SEALING SET CPL	502050814	990	1	199	51 22 501 14	OIL MOTOR
SEALING SET CPL	502050814	990	1	204	51 22 394 14	OIL MOTOR
SEALING SET CPL	512256614	250	1	387	51 14 347 14	SG SAFETY BLOCK
SEALING SET CPL	512299214	990	1	388	51 22 991 14	OIL MOTOR
SEALING SET CPL	790579414	902	1	30	11 28 647 6	VALVE BLOCK
SEALING SET CPL	981967114	990	1	621	51 02 322 14	OIL MOTOR
SEALING SET CPL CYL	10352446	900	1	529	10 09 917 3	DOUBLE-ACTING CYL
SEALING SET CPL CYL	10352447	1	1	662	10 22 785 5	DOUBLE-ACTING CYL
SEALING SET CPL CYL	513319014	99	1	460	51 33 141 14	DOUBLE-ACTING CYL
SEALING SET CPL CYL	513319214	99	1	39	51 33 139 14	DOUBLE-ACTING CYL
SEALING SET CPL CYL	790230614	900	1	703	59 20 008 14	DOUBLE-ACTING CYL
SEALING SET CPL CYL	790353914	990	1	716	51 03 361 14	SINGLE-ACTING CYL
SEALING SET CPL CYL	790407714	900	1	86	59 21 041 14	DOUBLE-ACTING CYL
SEALING SET CPL CYL	790407814	900	1	669	59 21 042 14	DOUBLE-ACTING CYL
SEALING SET MONOBLOCK	10349716	901	1	30	11 28 647 6	VALVE BLOCK
SEALING SET MONOBLOCK	10349776	900	1	30	11 28 647 6	VALVE BLOCK
SEAT	11226118	130	1	387	51 14 347 14	SG SAFETY BLOCK
SEAT FRAME	7024996	15	1	434	10 22 506 8	OPERATOR SEAT
SEAT PART CPL	7024981	12	1	434	10 22 506 8	OPERATOR SEAT
SEAT VAT	10165637	65	1	434	10 22 506 8	OPERATOR SEAT
SECURING CHAIN	592291614	2	1	429	59 22 914 14	PLATFORM FIXATION CPL
SELF-ALIGNING ROLLER BEAR	746001701	16	1	350	93 88 500 01	ROPE DRUM
SELF-LOADING SYSTEM HYD	10519712	2	1	660	10 51 971 3	SELF-LOADING SYSTEM RFK
SELF-LOADING SYSTEM HYD	10519738	2	1	666	11 23 619 7	SELF-LOADING SYSTEM RFK
SELF-LOADING SYSTEM RFK	10519713	642	1	3	01 38 376 14	LR 1300 SX
SELF-LOADING SYSTEM RFK	11236197	644	1	3	01 38 376 14	LR 1300 SX
SELF-LOADING SYSTEM RFK	11242988	647	1	4	01 38 376 14	LR 1300 SX
SELF-LOADING SYSTEM RFK	11895685	10	1	675	11 24 298 8	SELF-LOADING SYSTEM RFK
SELF-LOADING SYSTEM RFK	11895686	10	1	676	11 89 568 5	SELF-LOADING SYSTEM RFK
SELF-LOADING SYSTEM RFK	11895687	11	1	675	11 24 298 8	SELF-LOADING SYSTEM RFK
SELF-LOADING SYSTEM RFK	11895688	10	1	682	11 89 568 7	SELF-LOADING SYSTEM RFK
SENSOR	10144038	7	1	217	11 24 114 5	ASSEMBLY INSTAL.
SENSOR	11008787	9	2	217	11 24 114 5	ASSEMBLY INSTAL.
SERIES TERMINAL	10550739	75	22	406	10 55 963 5	SWITCH CABINET X1
SERIES TERMINAL	602125114	22	7	51	10 56 645 8	TERMINAL BOX
SERIES TERMINAL	602151914	86	4	406	10 55 963 5	SWITCH CABINET X1
SERIES TERMINAL	602153814	23	39	51	10 56 645 8	TERMINAL BOX
SERIES TERMINAL	602153814	74	13	406	10 55 963 5	SWITCH CABINET X1
SERIES TERMINAL	602153814	80	4	406	10 55 963 5	SWITCH CABINET X1
SERIES TERMINAL	693181114	71	3	406	10 55 963 5	SWITCH CABINET X1
SERRATED LOCK WASHER DI	425221314	9	1	47	10 53 048 9	FUSE HOLDER
SERRATED LOCK WASHER DI	425221314	16	4	343	10 51 969 7	NEEDLE LUFFING WINCH
SET MAIN BEARINGS	9076458	51	1	223	12 42 545 4	DIESEL ENGINE
SG HYDR	10519683	2	1	382	10 51 968 2	SG SUPERSTRUCTURE
SG SAFETY BLOCK	511434714	2	1	385	10 55 216 1	TUBING HYDR
SG SUPERSTRUCTURE	10519682	27	1	2	01 38 376 14	LR 1300 SX
SG TACHOGENERATOR RFK	10522930	828	1	4	01 38 376 14	LR 1300 SX
SG TACHOGENERATOR RFK	10529522	3	1	711	10 52 293 0	SG TACHOGENERATOR RFK
SHACKLE	11280746	16	1	637	11 27 109 7	LIGHTNING ROD RFK
SHACKLE	773930114	19	1	505	10 56 183 8	TOOL
SHACKLE	773930114	13	1	618	10 51 743 9	ROPE LUG CPL RFK
SHACKLE	773935814	28	4	666	11 23 619 7	SELF-LOADING SYSTEM RFK
SHACKLE	773939214	3	1	462	11 91 872 5	CHAIN CPL
SHACKLE	773939214	15	1	591	99 30 800 14	HOIST LIMIT SWITCH INSTAL.
SHACKLE	773954514	94	2	504	10 56 187 5	TOOL EQUIPMENT
SHACKLE	773954714	3	2	476	99 08 357 14	ATTACHMENT CHAIN

Description	Item	Pos.	Quantity	Sheet	Assembly	Description
SHAFT	540272014	30	1	627	54 02 703 14	FLANGE CPL
SHAFT SEAL	10564158	14	1	346	51 22 527 14	OIL MOTOR
SHAFT SEAL	11950210	50	1	380	99 04 645 14	DRIVE
SHAFT SEAL	7022315	2	1	393	11 94 020 8	CLOSING RING
SHAFT SEAL	710069514	20	1	168	11 22 127 4	PUMP ELEMENT
SHAFT SEAL	710069514	20	1	174	10 35 161 0	SEALING SET CPL
SHAFT SEAL	7413402	20	1	177	11 21 593 6	PUMP ELEMENT
SHAFT SEAL	790563914	10	1	451	51 24 059 14	VARIABLE DISPLACEMENT MO
SHEET	10098789	22	1	331	11 24 922 2	COVER UNDERSIDE
SHEET	10099005	1	1	373	99 29 389 14	SIDE COMPONENT
SHEET	10099005	1	1	374	99 29 392 14	SIDE COMPONENT
SHEET	10099009	3	10	376	99 29 386 14	BRACKET CPL
SHEET	10099009	3	10	377	99 29 434 14	BRACKET CPL
SHEET	10119129	1	1	300	10 11 912 8	LOCKING PIECES
SHEET	10225695	37	2	313	11 24 409 0	PANELLING SUPERSTR. INSTA
SHEET	10226477	24	1	423	10 35 007 6	SLIDING DOOR
SHEET	10336707	1	3	376	99 29 386 14	BRACKET CPL
SHEET	10336707	1	3	377	99 29 434 14	BRACKET CPL
SHEET	10336708	2	8	376	99 29 386 14	BRACKET CPL
SHEET	10336708	2	8	377	99 29 434 14	BRACKET CPL
SHEET	10336722	4	3	376	99 29 386 14	BRACKET CPL
SHEET	10336722	4	3	377	99 29 434 14	BRACKET CPL
SHEET	10447259	39	1	421	10 22 645 4	DOOR ACCESSORIES
SHEET	10522189	7	1	426	59 22 871 14	FRONT WINDOW CPL
SHEET	10540513	24	2	666	11 23 619 7	SELF-LOADING SYSTEM RFK
SHEET	10545918	10	1	313	11 24 409 0	PANELLING SUPERSTR. INSTA
SHEET	10560687	10	1	331	11 24 922 2	COVER UNDERSIDE
SHEET	10560688	17	1	331	11 24 922 2	COVER UNDERSIDE
SHEET	10560690	16	1	331	11 24 922 2	COVER UNDERSIDE
SHEET	10560691	11	1	331	11 24 922 2	COVER UNDERSIDE
SHEET	10560692	12	1	331	11 24 922 2	COVER UNDERSIDE
SHEET	10583559	15	1	331	11 24 922 2	COVER UNDERSIDE
SHEET	10583611	19	1	331	11 24 922 2	COVER UNDERSIDE
SHEET	10583612	20	1	331	11 24 922 2	COVER UNDERSIDE
SHEET	10583642	51	1	315	11 24 409 0	PANELLING SUPERSTR. INSTA
SHEET	10589204	58	2	510	11 23 820 3	PIVOT PIECE CPL
SHEET	11215379	10	1	616	11 21 552 4	ANGLE INDICATION RFK
SHEET	11219851	12	2	563	11 23 292 2	SUPPORT CPL
SHEET	11219851	11	2	597	11 25 204 2	SUPPORT CPL
SHEET	11228227	25	1	666	11 23 619 7	SELF-LOADING SYSTEM RFK
SHEET	11231673	19	2	581	11 28 629 9	MOUNTING PARTS
SHEET	11244094	28	1	313	11 24 409 0	PANELLING SUPERSTR. INSTA
SHEET	11249223	13	1	331	11 24 922 2	COVER UNDERSIDE
SHEET	11249224	18	1	331	11 24 922 2	COVER UNDERSIDE
SHEET	11249225	21	1	331	11 24 922 2	COVER UNDERSIDE
SHEET	11249678	24	1	331	11 24 922 2	COVER UNDERSIDE
SHEET	11909496	140	1	432	11 93 934 6	AIR CONDITIONING
SHEET	11913226	64	4	581	11 28 629 9	MOUNTING PARTS
SHEET	592072914	112	1	30	11 28 647 6	VALVE BLOCK
SHEET GASKET	10154459	2	1	227	10 15 445 8	CYLINDER
SHEET GASKET	592288114	31	1	426	59 22 871 14	FRONT WINDOW CPL
SHIM RING	10007971	3	1	452	10 50 351 3	DRIVING GEAR
SHIM RING 55X65X1.5 ST	7380531	44	1	136	92 68 016	REPAIR KIT LOCK RING
SHIM RING 70X95X0.5	10475718	4	1	392	10 65 027 0	CLOSING RING
SHIM RING DIN 988 16X22X1 S	422014001	23	3	629	54 02 705 14	DRIVE UNIT CPL
SHIM RING DIN 988 50X62X1.5	4002229	44	1	156	10 13 803 2	REPAIR KIT LOCK RING
SHOCK ABSORBER	10289994	55	1	436	10 28 999 3	VIBRATING SYSTEM
SHUT OFF DEVICE	10526733	11	1	60	10 56 070 1	TANK HYDR CPL
SHUT OFF DEVICE	790319114	3	1	718	11 31 446 3	CHARGE AIR PIPE CPL
SHUTDOWN VALVE	11067304	5	1	104	11 21 991 0	PUMP HOUSING

Description	Item	Pos.	Quantity	Sheet	Assembly	Description
SHUTTLE VALVE	10124239	4	1	153	10 14 131 6	TERMINAL BOARD PRE-ASS.
SHUTTLE VALVE	10446566	14	1	455	11 22 473 8	ADJUSTMENT
SHUTTLE VALVE	11067305	6	1	104	11 21 991 0	PUMP HOUSING
SHUTTLE VALVE	11267447	1	1	110	11 06 730 5	SHUTTLE VALVE
SHUTTLE VALVE	11938600	2	3	34	10 35 148 6	VALVE BLOCK
SHUTTLE VALVE	511491914	7	2	20	11 29 618 6	SUPERSTRUCTURE HYDR
SHUTTLE VALVE	511491914	11	2	446	11 89 300 5	TUBING HYDR
SIDE COMPONENT	992938914	1	1	372	99 33 537 14	ROPE GUARD LUG CPL
SIDE COMPONENT	992939214	2	1	372	99 33 537 14	ROPE GUARD LUG CPL
SIDE PANE LEFT	592288514	43	1	419	10 35 008 0	CABIN
SIDE PANE RIGHT	592289114	49	1	419	10 35 008 0	CABIN
SIDE PANE RIGHT	592289214	50	1	419	10 35 008 0	CABIN
SIDE PLATE	11274624	2	2	601	79 04 112 14	BOTTOM HOOK BLOCK
SIDE PLATE	11274798	2	2	608	79 05 205 14	BOTTOM HOOK BLOCK
SIEVE	11239595	3	1	219	11 24 240 8	UREA CONTAINER
SIGN	10099300	8	1	620	10 51 726 2	TUBING HYDR
SIGN	10523125	38	2	510	11 23 820 3	PIVOT PIECE CPL
SIGN	10533589	12	1	381	11 22 703 7	ROPES LUG MAIN BOOM
SIGN	10575705	38	1	724	10 52 155 9	MODULE REFUELLING SYSTE
SIGN	10584544	15	1	60	10 56 070 1	TANK HYDR CPL
SIGN	11227046	11	1	381	11 22 703 7	ROPES LUG MAIN BOOM
SIGN	11228766	19	1	649	10 55 280 7	GRATING CPL
SIGN	11228766	16	1	657	10 55 514 8	FALL PROTECTION RFK
SIGN	11232788	22	1	705	11 93 621 2	AIR CONDITIONING UNIT RFK
SIGN	11265425	12	2	524	11 26 694 5	SIGN LOCATIONS
SIGN	11265497	11	4	524	11 26 694 5	SIGN LOCATIONS
SIGN	11274707	17	1	217	11 24 114 5	ASSEMBLY INSTAL.
SIGN	11274708	18	1	217	11 24 114 5	ASSEMBLY INSTAL.
SIGN	606774714	27	1	516	11 90 151 1	CABLE LOOM 1 PIVOT PIECE E
SIGN	773193414	39	1	510	11 23 820 3	PIVOT PIECE CPL
SIGN	773193414	23	1	521	10 58 193 7	GRATING CPL
SIGN	773194314	40	2	510	11 23 820 3	PIVOT PIECE CPL
SIGN	773195214	317	1	343	10 51 969 7	NEEDLE LUFFING WINCH
SIGN	773195214	317	1	618	10 51 743 9	ROPE LUG CPL RFK
SIGN	790282814	2	1	598	91 89 071 14	TIP BOOM MODIFICATION
SIGN	790422414	50	1	593	99 48 521 14	TIP BOOM CPL
SIGN LOCATIONS	11266901	110	1	547	11 24 570 5	INTERMEDIATE PIECE ASSE
SIGN LOCATIONS	11266901	110	1	565	11 24 571 1	INTERMEDIATE PIECE ASSE
SIGN LOCATIONS	11266901	110	1	572	11 24 571 7	INTERMEDIATE PIECE ASSE
SIGN LOCATIONS	11266945	110	1	511	11 23 820 3	PIVOT PIECE CPL
SIGN LOCATIONS	11269727	110	1	578	11 24 132 4	BOOM HEAD CPL
SIGN LOCATIONS	11898219	52	1	2	01 38 376 14	LR 1300 SX
SIGNAL LAMP	10524927	100	1	404	11 27 973 6	CABIN EL
SIGNAL LAMP	10524927	37	2	539	10 53 120 7	A-FRAME ELECTRICS
SILENCER	502661608	7	1	8	11 92 958 8	AIR DUCT CPL
SINGLE HOOK	10522845	1	1	599	79 03 862 14	LOAD HOOK
SINGLE HOOK	11481162	1	1	604	11 27 463 8	HANGER
SINGLE STRAND SEALING	605620008	14	3	417	11 95 272 6	SOUND TRANSMITTER EL
SINGLE-ACTING CYL	510336114	1	1	715	10 56 173 5	TUBING HYDR
SIPHON PIPE	11236511	45	1	191	10 57 532 2	INTAKE PIPE OIL CPL
SIPHON PIPE	11236513	47	1	191	10 57 532 2	INTAKE PIPE OIL CPL
SIPHON PIPE	11236514	43	1	191	10 57 532 2	INTAKE PIPE OIL CPL
SIPHON PIPE	11236515	41	1	191	10 57 532 2	INTAKE PIPE OIL CPL
SIPHON PIPE	11236517	40	1	191	10 57 532 2	INTAKE PIPE OIL CPL
SIPHON PIPE	11236518	46	1	191	10 57 532 2	INTAKE PIPE OIL CPL
SIPHON PIPE	592257814	44	1	191	10 57 532 2	INTAKE PIPE OIL CPL
SLEDGE HAMMER 5000G	885040114	13	1	505	10 56 183 8	TOOL
SLEEVE		60	1	352	93 88 497 01	PLANETARY GEARBOX
SLEEVE	10447748	4	6	42	10 44 510 5	QUICK RELEASE FITTING
SLEEVE	10447748	4	4	457	10 44 510 2	QUICK RELEASE FITTING

Description	Item	Pos.	Quantity	Sheet	Assembly	Description
SLEEVE	10447748	4	4	458	10 44 510 1	QUICK RELEASE FITTING
SLEEVE	11267440	2	1	109	11 06 730 4	SHUTDOWN VALVE
SLEEVE	11267453	3	1	111	11 26 744 7	SHUTTLE VALVE
SLEEVE 14/25X26 S235JRH;EN	11276612	5	1	202	11 24 114 1	COOLER INSTALLATION CHA
SLEEVE 20/13.5X44 AISI 316	10571340	14	2	195	11 24 114 0	COOLER INSTALLATION WATE
SLEEVE 8X0.4	501507314	15	1	626	54 02 702 14	ROPE DRUM CPL
SLEEVE CONTACT	6003031	47	6	403	11 27 973 6	CABIN EL
SLEEVE CONTACT	6003031	95	6	404	11 27 973 6	CABIN EL
SLEEVE CONTACT	602339508	13	3	417	11 95 272 6	SOUND TRANSMITTER EL
SLEEVE NG32/RD60/23X85	11226016	20	1	387	51 14 347 14	SG SAFETY BLOCK
SLEW RING ROLLER BEARING	990706901	10	1	69	10 51 963 1	SUPERSTR. SLEWING RING IN
SLEWING ANGLE TRANSDUCE	10528626	31	1	712	10 52 952 2	SG TACHOGENERATOR RFK
SLEWING GEAR DRIVE	90013762	10	2	382	10 51 968 2	SG SUPERSTRUCTURE
SLIDE SEAT GUIDE	10289990	70	1	434	10 22 506 8	OPERATOR SEAT
SLIDE SEAT GUIDE	7024987	71	1	434	10 22 506 8	OPERATOR SEAT
SLIDEWAY 8/14X35 POM	11273242	17	4	313	11 24 409 0	PANELLING SUPERSTR. INSTA
SLIDING DISC 72X152X6	9889809	15	1	126	10 13 975 2	REPAIR SET SWIVEL YOKE
SLIDING DISC 72X152X6	9889809	15	1	130	98 89 984	REPAIR KIT DRIVING MECHAN
SLIDING DISC 72X152X6	9889809	15	1	133	98 89 983	REPAIR KIT DRIVING MECHAN
SLIDING DOOR	10350076	3	1	419	10 35 008 0	CABIN
SLIDING WINDOW	10224413	1	1	423	10 35 007 6	SLIDING DOOR
SLIDING WINDOW	11250970	3	1	424	10 22 441 3	SLIDING WINDOW
SLOTTED NUT M120X2 C45	927509501	13	1	396	90 01 376 2	SLEWING GEAR DRIVE
SLOTTED STRIP	11234375	57	2	333	11 24 483 7	MOUNTING PARTS SUPERST
SLOTTED STRIP	11244040	52	2	333	11 24 483 7	MOUNTING PARTS SUPERST
SLOTTED STRIP	11247029	28	1	333	11 24 483 7	MOUNTING PARTS SUPERST
SLOTTED STRIP	11247792	31	9	333	11 24 483 7	MOUNTING PARTS SUPERST
SLOTTED STRIP	11247799	32	2	333	11 24 483 7	MOUNTING PARTS SUPERST
SLOTTED TAPE STEEL	11234799	15	2	188	11 24 113 8	MOTOR BEARING CPL
SNAP HOOK	10508505	17	1	637	11 27 109 7	LIGHTNING ROD RFK
SNAP HOOK	744010014	2	1	462	11 91 872 5	CHAIN CPL
SNAP HOOK	744010414	5	2	476	99 08 357 14	ATTACHMENT CHAIN
SNAP HOOK	744011114	12	5	317	11 24 409 1	COVERS
SNAP RING 5 X 135	10352383	180	2	686	59 21 826 14	SUPPORT CYLINDER
SNAP RING 52X2 FST	4980482	7	2	243	10 14 636 7	PISTON CPL.
SNAP RING 5X175	10352382	175	1	685	59 21 826 14	SUPPORT CYLINDER
SNAP RING 6 X 172	10352384	185	1	686	59 21 826 14	SUPPORT CYLINDER
SNAP RING AV45X1.75		62	1	352	93 88 497 01	PLANETARY GEARBOX
SNIB	592291014	94	1	420	10 35 008 0	CABIN
SOCKET	10520078	131	1	46	11 24 519 0	SUPERSTRUCTURE EL
SOCKET	6205239	13	1	184	11 24 448 7	CENTRAL POWER UNIT EL
SOCKET DUST-PROOF	7615441	1	1	41	51 05 719 14	QUICK-FITTING THREAD COU
SOCKET HEAD SCREW	11215951	3	4	171	10 35 160 3	CONTROL VALVE
SOCKET HEAD SCREW	11215951	3	4	180	10 11 497 5	CONTROL VALVE
SOCKET HEAD SCREW	11217079	5	3	102	11 21 992 7	COVER
SOCKET HEAD SCREW	11217079	5	3	103	11 21 992 9	COVER
SOCKET HEAD SCREW	11219373	4	8	112	11 21 935 0	PUMP COVER
SOCKET HEAD SCREW	11219936	11	8	114	11 21 991 8	BEARING FLANGE
SOCKET HEAD SCREW	11220320	20	2	455	11 22 473 8	ADJUSTMENT
SOCKET HEAD SCREW	11220320	21	2	455	11 22 473 8	ADJUSTMENT
SOCKET HEAD SCREW	11224767	22	4	455	11 22 473 8	ADJUSTMENT
SOCKET HEAD SCREW	11913116	3	1	110	11 06 730 5	SHUTTLE VALVE
SOCKET HEAD SCREW DIN 6	4980750	46	1	126	10 13 975 2	REPAIR SET SWIVEL YOKE
SOCKET HEAD SCREW DIN 69	407203008	65	4	191	10 57 532 2	INTAKE PIPE OIL CPL
SOCKET HEAD SCREW DIN 6	240217402	22	6	127	90 77 464	RS FLANGE
SOCKET HEAD SCREW DIN 7	4072083	61	32	60	10 56 070 1	TANK HYDR CPL
SOCKET HEAD SCREW DIN 79	408301208	7	8	418	11 22 369 1	FOOT PEDAL EL INSTALLATIO
SOCKET HEAD SCREW DIN 9	11226139	190	4	387	51 14 347 14	SG SAFETY BLOCK
SOCKET HEAD SCREW DIN 91	10336668	8	30	467	11 89 365 0	CRAWLER CARRIER RIGHT CP
SOCKET HEAD SCREW DIN 91	10336668	8	30	478	11 89 365 1	CRAWLER CARRIER LEFT CP

Description	Item	Pos.	Quantity	Sheet	Assembly	Description
SOCKET HEAD SCREW DIN 91	11226137	180	4	387	51 14 347 14	SG SAFETY BLOCK
SOCKET HEAD SCREW ISO 1	11600879	4	1	262	10 15 315 1	HIGH PRESSURE CONNECTO
SOCKET HEAD SCREW ISO 1	11600879	3	1	263	10 14 114 0	RK HIGH PRESSURE CONNEC
SOCKET HEAD SCREW ISO 1	11600879	3	1	266	10 13 543 4	PRESSURE ADAPTER FASTEN
SOCKET HEAD SCREW ISO 1	4981218	43	8	119	10 11 835 7	REPAIR KIT CONNECTION HO
SOCKET HEAD SCREW ISO 1	4981218	43	4	131	98 89 833	RK CYLINDER+CONTROL PLAT
SOCKET HEAD SCREW ISO 1	4981218	43	4	134	98 89 832	RK CYLINDER+CONTROL PLAT
SOCKET HEAD SCREW ISO 1	11082116	3	1	261	10 15 286 7	INJECTOR WITH FASTENING
SOCKET HEAD SCREW ISO 1	11082116	2	1	265	10 13 543 2	INJECTOR FASTENING
SOCKET HEAD SCREW ISO 4	10539513	86	12	396	90 01 376 2	SLEWING GEAR DRIVE
SOCKET HEAD SCREW ISO 47		71	12	352	93 88 497 01	PLANETARY GEARBOX
SOCKET HEAD SCREW ISO 47	4002442	82	12	471	96 93 178 01	TRACTION DRIVE
SOCKET HEAD SCREW ISO 47	4002442	303	2	668	10 51 973 8	SELF-LOADING SYSTEM HYD
SOCKET HEAD SCREW ISO 47	4043014	300	2	668	10 51 973 8	SELF-LOADING SYSTEM HYD
SOCKET HEAD SCREW ISO 47	404208814	19	6	350	93 88 500 01	ROPE DRUM
SOCKET HEAD SCREW ISO 47	404208814	21	8	626	54 02 702 14	ROPE DRUM CPL
SOCKET HEAD SCREW ISO 4	4043124	60	4	94	11 24 773 5	HYDR POWER UNIT
SOCKET HEAD SCREW ISO 4	4043124	17	12	471	96 93 178 01	TRACTION DRIVE
SOCKET HEAD SCREW ISO 47		52	12	352	93 88 497 01	PLANETARY GEARBOX
SOCKET HEAD SCREW ISO 47	404208514	430	58	98	11 24 682 0	DISTRIBUTOR GEARBOX
SOCKET HEAD SCREW ISO 47	404208514	7	6	388	51 22 991 14	OIL MOTOR
SOCKET HEAD SCREW ISO 4	11651481	120	4	30	11 28 647 6	VALVE BLOCK
SOCKET HEAD SCREW ISO 4	4900981	62	24	471	96 93 178 01	TRACTION DRIVE
SOCKET HEAD SCREW ISO 47		56	12	352	93 88 497 01	PLANETARY GEARBOX
SOCKET HEAD SCREW ISO 4	4001622	61	12	193	11 24 113 9	ADD-ON PARTS DIESEL ENGIN
SOCKET HEAD SCREW ISO 4	4001622	2	4	258	10 15 085 7	HIGH PRESSURE PUMP W.FA
SOCKET HEAD SCREW ISO 4	4001622	2	4	259	10 15 074 3	RK HIGH PRESSURE PUMP
SOCKET HEAD SCREW ISO 4	4001622	65	4	581	11 28 629 9	MOUNTING PARTS
SOCKET HEAD SCREW ISO 47	10527561	74	12	396	90 01 376 2	SLEWING GEAR DRIVE
SOCKET HEAD SCREW ISO 47	10539505	86	4	218	11 24 114 5	ASSEMBLY INSTAL.
SOCKET HEAD SCREW ISO 47	10539505	15	8	340	10 52 656 0	MOUNTING PARTS
SOCKET HEAD SCREW ISO 4	4630200	63	4	60	10 56 070 1	TANK HYDR CPL
SOCKET HEAD SCREW ISO 4	4630200	8	8	385	10 55 216 1	TUBING HYDR
SOCKET HEAD SCREW ISO 4	4630200	11	15	471	96 93 178 01	TRACTION DRIVE
SOCKET HEAD SCREW ISO 4	4043133	53	4	94	11 24 773 5	HYDR POWER UNIT
SOCKET HEAD SCREW ISO 4	4900980	66	4	581	11 28 629 9	MOUNTING PARTS
SOCKET HEAD SCREW ISO 4	4900980	302	2	668	10 51 973 8	SELF-LOADING SYSTEM HYD
SOCKET HEAD SCREW ISO 47	10539508	22	6	626	54 02 702 14	ROPE DRUM CPL
SOCKET HEAD SCREW ISO 47	10539510	60	3	718	11 31 446 3	CHARGE AIR PIPE CPL
SOCKET HEAD SCREW ISO 47	4600385	62	8	192	10 58 017 0	RETURN PIPE
SOCKET HEAD SCREW ISO 47	4600385	5	2	245	10 14 843 8	ROCKER ARM BRACKET CPL.
SOCKET HEAD SCREW ISO 47	4600385	7	15	299	10 11 557 7	FLYWHEEL HOUSING MOUNT
SOCKET HEAD SCREW ISO 47	404313401	58	4	20	11 29 618 6	SUPERSTRUCTURE HYDR
SOCKET HEAD SCREW ISO 4	10539530	22	12	380	99 04 645 14	DRIVE
SOCKET HEAD SCREW ISO 47	4980938	20	2	123	10 13 333 4	COVER
SOCKET HEAD SCREW ISO 4	4043163	21	8	115	10 11 834 9	DOUBLE V-PUMP
SOCKET HEAD SCREW ISO 4	4980947	20	2	161	10 12 987 4	THROUGH DRIVE
SOCKET HEAD SCREW ISO 47	485555314	12	2	79	10 56 067 3	BATTERY INSTALLATION CPL
SOCKET HEAD SCREW ISO 4	4043003	30	8	361	10 51 968 6	LUG SUPERSTRUCTURE CPL
SOCKET HEAD SCREW ISO 4	4980012	6	2	299	10 11 557 7	FLYWHEEL HOUSING MOUNT
SOCKET HEAD SCREW ISO 47		77	8	352	93 88 497 01	PLANETARY GEARBOX
SOCKET HEAD SCREW ISO 47	10337130	20	8	380	99 04 645 14	DRIVE
SOCKET HEAD SCREW ISO 4	10012659	23	8	115	10 11 834 9	DOUBLE V-PUMP
SOCKET HEAD SCREW ISO 4	4000784	26	8	396	90 01 376 2	SLEWING GEAR DRIVE
SOCKET HEAD SCREW ISO 47	10539520	6	3	350	93 88 500 01	ROPE DRUM
SOCKET HEAD SCREW ISO 4	4901067	56	16	20	11 29 618 6	SUPERSTRUCTURE HYDR
SOCKET HEAD SCREW ISO 4	4600505	57	8	20	11 29 618 6	SUPERSTRUCTURE HYDR
SOCKET HEAD SCREW ISO 47	10539524	29	1	77	10 58 163 4	CABIN SUSPENSION CPL
SOCKET HEAD SCREW ISO 4	4600513	20	4	162	10 13 000 5	THROUGH DRIVE
SOCKET HEAD SCREW ISO 4	4600513	20	4	163	10 13 235 7	CONSTRUCTION KIT OUTPUT

Description	Item	Pos.	Quantity	Sheet	Assembly	Description
SOCKET HEAD SCREW ISO 4	4600513	20	4	164	10 13 452 1	THROUGH DRIVE
SOCKET HEAD SCREW ISO 4	4600513	20	4	165	10 13 806 8	THROUGH DRIVE
SOCKET HEAD SCREW ISO 4	10544044	751	4	486	11 26 260 6	WINCH 1 HYDR
SOCKET HEAD SCREW ISO 4	10544050	18	16	446	11 89 300 5	TUBING HYDR
SOCKET HEAD SCREW ISO 47		21	24	352	93 88 497 01	PLANETARY GEARBOX
SOCKET HEAD SCREW ISO 4	10544065	26	8	77	10 58 163 4	CABIN SUSPENSION CPL
SOCKET HEAD SCREW ISO 4	10544068	63	4	191	10 57 532 2	INTAKE PIPE OIL CPL
SOCKET HEAD SCREW ISO 47	10530200	440	12	98	11 24 682 0	DISTRIBUTOR GEARBOX
SOCKET HEAD SCREW ISO 4	10544072	12	6	350	93 88 500 01	ROPE DRUM
SOCKET HEAD SCREW ISO 4	10017870	25	4	153	10 14 131 6	TERMINAL BOARD PRE-ASS.
SOCKET HEAD SCREW ISO 4	10191905	6	24	349	96 96 248 01	WINCH
SOCKET HEAD SCREW ISO 4	10191905	11	18	350	93 88 500 01	ROPE DRUM
SOCKET HEAD SCREW ISO 47	10544105	12	48	382	10 51 968 2	SG SUPERSTRUCTURE
SOCKET HEAD SCREW ISO 4	10544092	63	4	94	11 24 773 5	HYDR POWER UNIT
SOCKET HEAD SCREW ISO 4	10544093	62	4	94	11 24 773 5	HYDR POWER UNIT
SOCKET HEAD SCREW ISO 47	10544121	17	8	660	10 51 971 3	SELF-LOADING SYSTEM RFK
SOCKET HEAD SCREW ISO 4	10544113	16	8	660	10 51 971 3	SELF-LOADING SYSTEM RFK
SOCKET HEAD SCREW ISO 47	10228541	20	2	142	10 12 942 0	PRESSURE REDUCTION VALV
SOCKET HEAD SCREW ISO 4	10539448	57	12	51	10 56 645 8	TERMINAL BOX
SOCKET HEAD SCREW ISO 4	10278936	6	40	81	10 56 069 4	MODULES INSTALLATION
SOCKET HEAD SCREW ISO 47	404214114	10	4	80	11 31 093 2	LIMIT SWITCH INSTALLATION
SOCKET HEAD SCREW ISO 4	10539454	26	4	581	11 28 629 9	MOUNTING PARTS
SOCKET HEAD SCREW ISO 4	10539454	9	8	582	11 28 610 5	RETAINING DEVICE CPL
SOCKET HEAD SCREW ISO 47	4600552	59	28	20	11 29 618 6	SUPERSTRUCTURE HYDR
SOCKET HEAD SCREW ISO 47	4600552	41	4	715	10 56 173 5	TUBING HYDR
SOCKET HEAD SCREW ISO 4	11250990	420	4	98	11 24 682 0	DISTRIBUTOR GEARBOX
SOCKET HEAD SCREW ISO 4	10539462	74	4	137	92 73 187	REPAIR KIT MAGNET
SOCKET HEAD SCREW ISO 47	404302914	6	1	345	10 51 969 8	NEEDLE LUFFING WINCH HYD
SOCKET HEAD SCREW ISO 47	404302914	7	4	362	10 51 968 7	MAIN LUG HYDR
SOCKET HEAD SCREW ISO 4	10539467	28	2	538	11 24 444 4	A-FRAME 1 CPL
SOCKET HEAD SCREW ISO 4	404203514	13	4	528	10 51 959 1	TUBING HYDR
SOCKET HEAD SCREW ISO 4	10446871	47	6	467	11 89 365 0	CRAWLER CARRIER RIGHT CP
SOCKET HEAD SCREW ISO 4	10446871	47	6	478	11 89 365 1	CRAWLER CARRIER LEFT CP
SOCKET HEAD SCREW ISO 4	11233296	135	2	30	11 28 647 6	VALVE BLOCK
SOCKET HEAD SCREW ISO 4	404250914	3	1	302	10 12 797 9	LOCKING PIECES
SOCKET HEAD SCREW ISO 4	404250914	51	3	627	54 02 703 14	FLANGE CPL
SOCKET HEAD SCREW ISO 4	404251014	60	3	195	11 24 114 0	COOLER INSTALLATION WATE
SOCKET HEAD SCREW ISO 4	404251014	91	4	511	11 23 820 3	PIVOT PIECE CPL
SOCKET HEAD SCREW ISO 4	11233404	155	2	30	11 28 647 6	VALVE BLOCK
SOCKET HEAD SCREW ISO 4	404251414	61	6	195	11 24 114 0	COOLER INSTALLATION WATE
SOCKET HEAD SCREW ISO 4	11233402	154	16	30	11 28 647 6	VALVE BLOCK
SOCKET HEAD SCREW ISO 47	11233401	153	10	30	11 28 647 6	VALVE BLOCK
SOCKET HEAD SCREW ISO 47	10539466	5	1	540	91 90 584 14	ANGLE INDICATION
SOCKET HEAD SCREW ISO 4	10219869	22	4	150	10 14 360 7	REPAIR SET SWIVEL BEARIN
SOCKET HEAD SCREW ISO 4	10539483	40	8	315	11 24 409 0	PANELLING SUPERSTR. INSTA
SOCKET HEAD SCREW ISO 4	10539483	9	4	415	91 65 251 14	CABLE DUCT CABINET 1
SOCKET HEAD SCREW ISO 47	4043082	14	2	292	10 14 013 6	EXHAUST TC MOUNTING
SOCKET HEAD SCREW ISO 4	404206414	31	12	402	11 27 970 6	CABIN CPL
SOCKET HEAD SCREW ISO 4	485556314	23	4	626	54 02 702 14	ROPE DRUM CPL
SOCKET HEAD SCREW ISO 4	404206614	8	4	704	11 22 037 2	FOOT PEDAL EL INSTALLATIO
SOCKET HEAD SCREW ISO 47	4980920	21	8	157	10 12 226 2	REGULATION REPAIR KIT
SOCKET HEAD SCREW ISO 47	4980840	20	4	121	90 74 418	REGULATING VALVE
SOCKET HEAD SCREW ISO 4	10539485	18	6	629	54 02 705 14	DRIVE UNIT CPL
SOCKET HEAD SCREW ISO 4	10539486	50	1	627	54 02 703 14	FLANGE CPL
SOCKET HEAD SCREW ISO 4	10539488	25	4	361	10 51 968 6	LUG SUPERSTRUCTURE CPL
SOCKET HEAD SCREW ISO 47	11170484	26	2	153	10 14 131 6	TERMINAL BOARD PRE-ASS.
SOCKET HEAD SCREW ISO 47	11170484	26	2	159	10 13 803 4	GASKET KIT INT.FLANGE
SOCKET HEAD SCREW ISO 4	10539492	62	2	8	11 92 958 8	AIR DUCT CPL
SOCKET HEAD SCREW ISO 4	10539492	23	2	552	11 28 390 8	BOOM ACCESS
SOCKET HEAD SCREW ISO 4	10539492	23	2	568	11 28 583 8	BOOM ACCESS

Description	Item	Pos.	Quantity	Sheet	Assembly	Description
SOCKET HEAD SCREW ISO 4	10539492	23	2	575	11 28 626 1	BOOM ACCESS
SOCKET HEAD SCREW ISO 4	10514797	17	6	629	54 02 705 14	DRIVE UNIT CPL
SOCKET HEAD SCREW ISO 4	10539496	2	2	652	11 23 827 7	ROPE GUARD
SOCKET HEAD SCREW ISO 47	404333614	61	12	94	11 24 773 5	HYDR POWER UNIT
SOCKET HEAD SCREW ISO476	11290853	460	1	98	11 24 682 0	DISTRIBUTOR GEARBOX
SOCKET HEAD SCREW ISO476	11290854	465	1	98	11 24 682 0	DISTRIBUTOR GEARBOX
SOCKET HEAD SCREW M10X3	10355735	27	4	177	11 21 593 6	PUMP ELEMENT
SOCKET HEAD SCREW M5X55	11219069	5	2	214	10 55 091 1	ADD-ON PRELIMINARY FUEL F
SOCKET HEAD SCREW UN 120	10225045	4	4	47	10 53 048 9	FUSE HOLDER
SOCKET SHELL	10036809	42	1	516	11 90 151 1	CABLE LOOM 1 PIVOT PIECE E
SOCKET SHELL	693155014	32	1	516	11 90 151 1	CABLE LOOM 1 PIVOT PIECE E
SOCKET SHELL	693155014	30	1	595	97 14 959 03	HOIST LIMIT SWITCH EL
SOFT FACE HAMMER 60G	885045214	18	1	505	10 56 183 8	TOOL
SOFTWARE	10524422	401	1	3	01 38 376 14	LR 1300 SX
SOLENOID VALVE	10336968	120	1	387	51 14 347 14	SG SAFETY BLOCK
SOLENOID VALVE	11226980	6	1	673	59 21 584 14	LOWERING BRAKE VALVE
SOLENOID VALVE	11254299	1	1	709	10 56 536 7	SOLENOID VALVE BUILT-IN KI
SOLENOID VALVE	592300614	152	13	30	11 28 647 6	VALVE BLOCK
SOLENOID VALVE BUILT-IN KI	10565367	1	1	708	10 56 536 8	SOLENOIDVALVE BUILT-IN KIT
SOLENOIDVALVE BUILT-IN KIT	10565368	12	1	705	11 93 621 2	AIR CONDITIONING UNIT RFK
SOUND REDUCTION	981953714	992	1	4	01 38 376 14	LR 1300 SX
SOUND TRANSMITTER EL	11952726	83	1	404	11 27 973 6	CABIN EL
SOUNDER	11933792	10	1	417	11 95 272 6	SOUND TRANSMITTER EL
SPACER BOLT	11274557	9	4	608	79 05 205 14	BOTTOM HOOK BLOCK
SPACER PIECE	10227757	17	4	483	99 26 718 14	PEDESTAL
SPACER PIECE	11216088	32	1	77	10 58 163 4	CABIN SUSPENSION CPL
SPACER PIECE	289064214	24	4	361	10 51 968 6	LUG SUPERSTRUCTURE CPL
SPACER RING SET	9072436	70	1	127	90 77 464	RS FLANGE
SPARE ELEMENT	10136801	1	1	233	10 13 680 0	CRANKCASE BREATHER
SPECIAL THREADED UNION	10446305	28	1	94	11 24 773 5	HYDR POWER UNIT
SPECIAL THREADED UNION	289031614	13	1	486	11 26 260 6	WINCH 1 HYDR
SPECIAL THREADED UNION	289031614	13	1	501	11 26 261 1	WINCH 2 HYDR
SPHERICAL BEARING	746911614	18	4	581	11 28 629 9	MOUNTING PARTS
SPHERICAL BEARING	746913614	17	1	666	11 23 619 7	SELF-LOADING SYSTEM RFK
SPHERICAL BEARING	746925314	13	1	703	59 20 008 14	DOUBLE-ACTING CYL
SPHERICAL BEARING	746925314	14	1	703	59 20 008 14	DOUBLE-ACTING CYL
SPHERICAL WASHER DIN 631	10036473	4	1	261	10 15 286 7	INJECTOR WITH FASTENING
SPHERICAL WASHER DIN 631	10036473	2	1	263	10 14 114 0	RK HIGH PRESSURE CONNEC
SPHERICAL WASHER DIN 631	10036473	3	1	265	10 13 543 2	INJECTOR FASTENING
SPHERICAL WASHER DIN 631	11622278	3	1	262	10 15 315 1	HIGH PRESSURE CONNECTO
SPHERICAL WASHER DIN 631	11622278	2	1	266	10 13 543 4	PRESSURE ADAPTER FASTEN
SPIRAL BACK-UP RING	540273214	20	1	629	54 02 705 14	DRIVE UNIT CPL
SPIRAL DOWEL PIN DIN 7344 5	11306379	6	1	693	11 23 623 3	POUCH SOCKET
SPIRAL SPRING HINGE PLATE	10509153	32	4	631	10 55 372 1	ROOF RAILING RFK
SPIRIT LEVEL	714000808	5	1	438	97 07 857 03	SPIRIT LEVEL ASSY.
SPIRIT LEVEL	714000808	12	1	681	11 89 568 6	SELF-LOADING SYSTEM RFK
SPIRIT LEVEL ASSY.	970785703	44	1	402	11 27 970 6	CABIN CPL
SPLINE SHAFT	790346614	120	1	98	11 24 682 0	DISTRIBUTOR GEARBOX
SPLIT PIN ISO 1234 10X63 A4	433014214	21	2	538	11 24 444 4	A-FRAME 1 CPL
SPLIT PIN ISO 1234 10X80 A4	433010314	20	2	83	10 51 969 4	A-FRAME ERECTION CYL INST
SPLIT PIN ISO 1234 10X80 A4	433010314	14	1	561	11 93 703 7	ANCHORING ROD CPL
SPLIT PIN ISO 1234 10X80 A4	433010314	14	1	570	11 93 702 0	ANCHORING ROD CPL
SPLIT PIN ISO 1234 10X80 A4	433010314	50	2	581	11 28 629 9	MOUNTING PARTS
SPLIT PIN ISO 1234 10X80 A4	433010314	32	4	593	99 48 521 14	TIP BOOM CPL
SPLIT PIN ISO 1234 10X80 A4	433010314	25	4	660	10 51 971 3	SELF-LOADING SYSTEM RFK
SPLIT PIN ISO 1234 10X80 A4	433010314	21	1	666	11 23 619 7	SELF-LOADING SYSTEM RFK
SPLIT PIN ISO 1234 13X112 A4	433011114	21	2	660	10 51 971 3	SELF-LOADING SYSTEM RFK
SPLIT PIN ISO 1234 5X32	433006314	4	2	475	10 50 179 5	ACCESS CPL
SPLIT PIN ISO 1234 5X32	433006314	7	2	585	11 28 357 6	MOUNTING PARTS
SPLIT PIN ISO 1234 5X45	433006614	4	4	82	99 23 451 14	PIVOT BOLT INSTALLATION

Description	Item	Pos.	Quantity	Sheet	Assembly	Description
SPLIT PIN ISO 1234 5X50	433006714	12	8	343	10 51 969 7	NEEDLE LUFFING WINCH
SPLIT PIN ISO 1234 6.3X32 ST	433007508	31	4	77	10 58 163 4	CABIN SUSPENSION CPL
SPLIT PIN ISO 1234 6.3X45	433007708	25	4	77	10 58 163 4	CABIN SUSPENSION CPL
SPLIT PIN ISO 1234 6.3X63	433008108	26	4	538	11 24 444 4	A-FRAME 1 CPL
SPLIT PIN ISO 1234 6.3X63	433008108	33	2	590	99 23 398 14	ROLLER SET
SPLIT PIN ISO 1234 6.3X71 A4	433008214	16	4	83	10 51 969 4	A-FRAME ERECTION CYL INST
SPLIT PIN ISO 1234 8X100 A4	433009514	14	2	522	99 30 060 14	ANCHORING ROD CPL
SPLIT PIN ISO 1234 8X100 A4	433009514	15	8	542	99 26 417 14	ANCHORING ROD CPL
SPLIT PIN ISO 1234 8X100 A4	433009514	14	2	560	99 24 404 14	ANCHORING ROD CPL
SPLIT PIN ISO 1234 8X100 A4	433009514	14	2	569	99 24 405 14	ANCHORING ROD CPL
SPLIT PIN ISO 1234 8X100 A4	433009514	14	6	576	99 24 406 14	ANCHORING ROD CPL
SPLIT PIN ISO 1234 8X100 A4	433009514	14	6	588	99 24 594 14	ANCHORING ROD CPL
SPLIT PIN ISO 1234 8X50 A4	433008814	48	2	581	11 28 629 9	MOUNTING PARTS
SPLIT PIN ISO 1234 8X56 A4	433009014	31	4	188	11 24 113 8	MOTOR BEARING CPL
SPLIT PIN ISO 1234 8X56 A4	433009014	30	2	640	99 10 116 14	ROPE GUIDE
SPLIT PIN ISO 1234 8X63 A4	433009114	15	2	77	10 58 163 4	CABIN SUSPENSION CPL
SPLIT PIN ISO 1234 8X63 A4	433009114	49	2	581	11 28 629 9	MOUNTING PARTS
SPLIT PIN ISO 1234 8X63 A4	433009114	19	2	593	99 48 521 14	TIP BOOM CPL
SPLIT PIN ISO 1234 8X80	433009408	14	2	594	11 24 825 8	ROPE GUIDE ST.CONST. RFK
SPLIT PIN ISO 1234 8X90	433009714	33	4	660	10 51 971 3	SELF-LOADING SYSTEM RFK
SPOOL	11600281	3	1	109	11 06 730 4	SHUTDOWN VALVE
SPRING	10287741	6	1	179	10 28 766 5	ADJUSTING PIECE
SPRING	10324860	7	1	170	10 32 489 2	DRIVING GEAR
SPRING ELEMENT	10032001	7	1	215	10 30 300 7	FUEL PREFILTER
SPRING LOADED MULTI-DISC		70	1	352	93 88 497 01	PLANETARY GEARBOX
SPRING LOADED MULTI-DISC	502037201	80	1	471	96 93 178 01	TRACTION DRIVE
SPRING PLUG	592291714	3	1	429	59 22 914 14	PLATFORM FIXATION CPL
SPRING PLUG DIN 11024 2.5	433206014	14	1	591	99 30 800 14	HOIST LIMIT SWITCH INSTAL.
SPRING PLUG DIN 11024 2.5	433206014	48	1	593	99 48 521 14	TIP BOOM CPL
SPRING PLUG DIN 11024 2.5	433206014	51	8	633	10 55 372 1	ROOF RAILING RFK
SPRING PLUG DIN 11024 4	433206214	33	2	510	11 23 820 3	PIVOT PIECE CPL
SPRING PLUG DIN 11024 4	433206214	52	10	633	10 55 372 1	ROOF RAILING RFK
SPRING PLUG DIN 11024 5	433206314	21	6	341	99 29 803 14	LASHING BALLAST
SPRING PLUG DIN 11024 5	433206314	31	2	640	99 10 116 14	ROPE GUIDE
SPRING SUPPORT	11267441	4	2	109	11 06 730 4	SHUTDOWN VALVE
SPRING SUPPORT	570114908	116	1	621	51 02 322 14	OIL MOTOR
SPRING SUPPORT	790579314	131	15	30	11 28 647 6	VALVE BLOCK
SPRING SUPPORT	9076178	12	2	157	10 12 226 2	REGULATION REPAIR KIT
SPRING SUPPORT	9278876	13	1	125	92 78 875	PRESSURE CUT-OFF
SPRING WASHER DIN 137 X10	10411092	4	1	297	11 38 664 5	STARTER
SPRING WASHER DIN 137 X10	10411093	6	2	297	11 38 664 5	STARTER
SPROCKET	10521183	12	1	467	11 89 365 0	CRAWLER CARRIER RIGHT CP
SPROCKET	10521183	12	1	478	11 89 365 1	CRAWLER CARRIER LEFT CP
SPUR WHEEL	11294362	100	1	98	11 24 682 0	DISTRIBUTOR GEARBOX
SPUR WHEEL	11294363	110	4	98	11 24 682 0	DISTRIBUTOR GEARBOX
SQUARE TUBE	10557117	5	1	666	11 23 619 7	SELF-LOADING SYSTEM RFK
SQUARE TUBE	11278507	1	1	585	11 28 357 6	MOUNTING PARTS
STARTER	11386645	1	1	296	10 12 037 2	STARTER INSTALLATION
STARTER INSTALLATION	10120372	450	1	224	12 42 545 4	DIESEL ENGINE
STEEL BALL	11226127	140	1	387	51 14 347 14	SG SAFETY BLOCK
STEEL GASKET	7023847	905	14	388	51 22 991 14	OIL MOTOR
STEEL GASKET	7024277	115	14	621	51 02 322 14	OIL MOTOR
STEEL WIRE ROPE	773400308	73	0.25	46	11 24 519 0	SUPERSTRUCTURE EL
STEEL WIRE ROPE	773400308	25	0.9	584	10 59 863 3	PENDULUM CPL
STEEL WIRE ROPE	773400308	12	0.62	597	11 25 204 2	SUPPORT CPL
STEEL WIRE ROPE	773400314	22	2	640	99 10 116 14	ROPE GUIDE
STEERING CONSOLE LEFT CP	10223224	16	1	402	11 27 970 6	CABIN CPL
STEERING CONSOLE RIGHT	11260956	17	1	402	11 27 970 6	CABIN CPL
STEP	10501783	1	1	475	10 50 179 5	ACCESS CPL
STICKER	10541838	32	1	613	11 90 722 6	MODEM RFK

Description	Item	Pos.	Quantity	Sheet	Assembly	Description
STICKER SOUND VOLUME LE	9874345	12	1	18	11 24 047 9	SUPERSTRUCTURE CPL
STOP BOLT M10X1	540272414	60	1	627	54 02 703 14	FLANGE CPL
STOP PLUG	10123528	3	1	153	10 14 131 6	TERMINAL BOARD PRE-ASS.
STOPPER PLUG	602458214	15	8	411	10 53 171 8	KEYBOARD
STOPPER PLUG	606907114	37	1	724	10 52 155 9	MODULE REFUELLING SYSTE
STOPPER PLUG	692405708	15	4	417	11 95 272 6	SOUND TRANSMITTER EL
STOPPER PLUG	693061214	26	15	516	11 90 151 1	CABLE LOOM 1 PIVOT PIECE E
STOPPER PLUG	693061314	29	1	51	10 56 645 8	TERMINAL BOX
STOPPER PLUG	693061314	25	1	516	11 90 151 1	CABLE LOOM 1 PIVOT PIECE E
STOPPER PLUG	693061314	73	2	517	11 90 151 1	CABLE LOOM 1 PIVOT PIECE E
STOPPER PLUG	693061414	24	8	516	11 90 151 1	CABLE LOOM 1 PIVOT PIECE E
STOPPER PLUG	693061514	63	2	517	11 90 151 1	CABLE LOOM 1 PIVOT PIECE E
STOPPER PLUG	693061514	52	2	595	97 14 959 03	HOIST LIMIT SWITCH EL
STRAINER FILTER	11368896	6	1	220	10 14 653 8	SUCTION MODUL
STRIP	10349434	21	4	333	11 24 483 7	MOUNTING PARTS SUPERST
STRIP	10546407	9	2	329	10 54 591 0	MOTOR COWLING
STRIP	11238278	1	1	652	11 23 827 7	ROPE GUARD
STRIP	592287014	26	1	419	10 35 008 0	CABIN
STRIP	948282314	6	1	79	10 56 067 3	BATTERY INSTALLATION CPL
STRIP	971303203	34	1	510	11 23 820 3	PIVOT PIECE CPL
STRIP	971303203	10	1	551	11 28 725 5	ROPE GUARD CPL
STRUT	938858701	10	2	357	96 96 543 01	WINCH FRAME
SUBPLATE	10526962	21	1	406	10 55 963 5	SWITCH CABINET X1
SUCTION FLAP RFK	11314462	854	1	4	01 38 376 14	LR 1300 SX
SUCTION MODUL	10146538	6	1	219	11 24 240 8	UREA CONTAINER
SUCTION PIPE AIR	11247162	11	1	207	11 24 114 2	SUCTION UNIT AIR
SUCTION PIPE AIR	11252578	15	1	311	11 24 114 6	COVER
SUCTION PIPE AIR	11929287	21	1	5	11 93 045 7	MODIFICATION KIT RFK
SUCTION PIPE OIL	10519481	15	1	92	11 24 048 0	CENTRAL POWER UNIT
SUCTION PIPE OIL ST.CONST.	10575323	3	1	191	10 57 532 2	INTAKE PIPE OIL CPL
SUCTION PUMP PRE-ASS.	10133823	1	1	255	10 13 394 7	SUCTION PUMP WITH FASTEN
SUCTION PUMP WITH FASTEN	10133947	141	1	223	12 42 545 4	DIESEL ENGINE
SUCTION UNIT AIR	11241142	30	1	92	11 24 048 0	CENTRAL POWER UNIT
SUMP PAN CPL	11283977	15	1	549	11 24 570 3	BOOM INTERMEDIATE SECTIO
SUMP PAN CPL	11283977	15	1	567	11 24 570 9	BOOM INTERMEDIATE SECTIO
SUMP PAN CPL	11283977	15	1	574	11 24 571 5	BOOM INTERMEDIATE SECTIO
SUMP PAN CPL	11283978	16	1	549	11 24 570 3	BOOM INTERMEDIATE SECTIO
SUMP PAN CPL	11283978	16	1	567	11 24 570 9	BOOM INTERMEDIATE SECTIO
SUMP PAN CPL	11283978	16	1	574	11 24 571 5	BOOM INTERMEDIATE SECTIO
SUMP PAN CPL	11283995	17	1	549	11 24 570 3	BOOM INTERMEDIATE SECTIO
SUMP PAN CPL	11283995	17	1	567	11 24 570 9	BOOM INTERMEDIATE SECTIO
SUMP PAN CPL	11283995	17	1	574	11 24 571 5	BOOM INTERMEDIATE SECTIO
SUMP PAN CPL	11283997	18	1	549	11 24 570 3	BOOM INTERMEDIATE SECTIO
SUMP PAN CPL	11283997	18	1	567	11 24 570 9	BOOM INTERMEDIATE SECTIO
SUMP PAN CPL	11283997	18	1	574	11 24 571 5	BOOM INTERMEDIATE SECTIO
SUN VISOR	592290714	6	1	428	59 22 905 14	MIRROR + SUNN VISOR
SUN WHEEL		25	1	352	93 88 497 01	PLANETARY GEARBOX
SUN WHEEL		35	1	352	93 88 497 01	PLANETARY GEARBOX
SUN WHEEL		45	1	352	93 88 497 01	PLANETARY GEARBOX
SUN WHEEL	540270714	13	1	625	54 02 701 14	PLANETARY STAGE
SUN WHEEL	540270914	23	1	625	54 02 701 14	PLANETARY STAGE
SUN WHEEL	927562901	30	1	396	90 01 376 2	SLEWING GEAR DRIVE
SUN WHEEL	927597301	45	1	396	90 01 376 2	SLEWING GEAR DRIVE
SUN WHEEL	927651701	60	1	396	90 01 376 2	SLEWING GEAR DRIVE
SUN WHEEL	944378403	40	1	471	96 93 178 01	TRACTION DRIVE
SUN WHEEL	944404503	20	1	471	96 93 178 01	TRACTION DRIVE
SUN WHEEL	944405203	30	1	471	96 93 178 01	TRACTION DRIVE
SUNSHADE	592291214	102	1	420	10 35 008 0	CABIN
SUPERSTR. SLEWING RING IN	10519631	21	1	18	11 24 047 9	SUPERSTRUCTURE CPL
SUPERSTRUCTURE CPL	11240479	5	1	2	01 38 376 14	LR 1300 SX

Description	Item	Pos.	Quantity	Sheet	Assembly	Description
SUPERSTRUCTURE EL	11245190	3	1	18	11 24 047 9	SUPERSTRUCTURE CPL
SUPERSTRUCTURE EL	11931930	100	1	15	11 93 192 6	MODIFICATION EL RFK
SUPERSTRUCTURE HYDR	11296186	2	1	18	11 24 047 9	SUPERSTRUCTURE CPL
SUPPORT	11219265	10	2	543	11 23 749 8	SUPPORT CPL
SUPPORT	11219265	10	2	562	11 23 290 7	SUPPORT CPL
SUPPORT	11219265	11	2	563	11 23 292 2	SUPPORT CPL
SUPPORT	11219265	10	2	597	11 25 204 2	SUPPORT CPL
SUPPORT	11260806	44	2	593	99 48 521 14	TIP BOOM CPL
SUPPORT	289035314	10	1	545	99 29 588 14	SUPPORT
SUPPORT	992958814	10	4	544	11 28 594 7	SUPPORT CPL
SUPPORT	992958814	10	6	564	11 28 619 1	SUPPORT CPL
SUPPORT	992958814	10	6	571	11 28 653 4	SUPPORT CPL
SUPPORT CPL	11232907	14	8	548	11 93 749 9	ASSEMBLY UNIT
SUPPORT CPL	11232907	14	8	566	11 93 750 1	ASSEMBLY UNIT
SUPPORT CPL	11232907	14	16	573	11 93 750 4	ASSEMBLY UNIT
SUPPORT CPL	11232907	15	2	578	11 24 132 4	BOOM HEAD CPL
SUPPORT CPL	11232922	15	4	548	11 93 749 9	ASSEMBLY UNIT
SUPPORT CPL	11232922	15	4	566	11 93 750 1	ASSEMBLY UNIT
SUPPORT CPL	11232922	15	4	573	11 93 750 4	ASSEMBLY UNIT
SUPPORT CPL	11232922	16	4	578	11 24 132 4	BOOM HEAD CPL
SUPPORT CPL	11237498	13	4	536	11 23 937 8	A-FRAME 1 ASSEMBLY UNIT
SUPPORT CPL	11252042	51	2	593	99 48 521 14	TIP BOOM CPL
SUPPORT CPL	11285947	65	1	2	01 38 376 14	LR 1300 SX
SUPPORT CPL	11286191	69	1	2	01 38 376 14	LR 1300 SX
SUPPORT CPL	11286534	77	4	2	01 38 376 14	LR 1300 SX
SUPPORT CPL	991606114	63	1	18	11 24 047 9	SUPERSTRUCTURE CPL
SUPPORT CPL	991873614	43	4	538	11 24 444 4	A-FRAME 1 CPL
SUPPORT CYLINDER	592182614	1	4	684	11 23 524 8	TUBING HYDR
SUPPORT FLANGE		50	1	352	93 88 497 01	PLANETARY GEARBOX
SUPPORT FLANGE	939556201	15	1	350	93 88 500 01	ROPE DRUM
SUPPORT PLATE	9073189	13	1	14	11 41 475 7	ACCESSORIES AIR COMPRES
SUPPORT PLATE	9073190	11	1	14	11 41 475 7	ACCESSORIES AIR COMPRES
SUPPORT PLATE CPL	990759714	10	4	687	11 89 568 8	SELF-LOADING SYSTEM RFK
SUPPORT SHEET	10349598	81	2	511	11 23 820 3	PIVOT PIECE CPL
SUPPORT SHEET	10349598	10	1	555	11 28 397 8	SUMP PAN CPL
SUPPORT SHEET	10349598	10	1	557	11 28 399 7	SUMP PAN CPL
SUPPORT SHEET	10349599	82	2	511	11 23 820 3	PIVOT PIECE CPL
SUPPORT SHEET	10349599	10	1	554	11 28 397 7	SUMP PAN CPL
SUPPORT SHEET	10349599	10	1	556	11 28 399 5	SUMP PAN CPL
SUPPORTING RING	10352368	140	1	685	59 21 826 14	SUPPORT CYLINDER
SUPPORTING RING	11910328	111	1	529	10 09 917 3	DOUBLE-ACTING CYL
SUPPORTING RING	11918997	181	2	86	59 21 041 14	DOUBLE-ACTING CYL
SUPPORTING RING	511710314	13	1	41	51 05 719 14	QUICK-FITTING THREAD COU
SUPPORTING WASHER	10324886	11	1	170	10 32 489 2	DRIVING GEAR
SUPPORTING WASHER 45X5	10123256	10	2	149	98 85 937	WASHER SET
SUPPORTING WASHER 45X5	10123257	11	2	149	98 85 937	WASHER SET
SUPPORTING WASHER 45X5	10123258	12	2	149	98 85 937	WASHER SET
SUPPORTING WASHER DIN 98		47	3	352	93 88 497 01	PLANETARY GEARBOX
SUPPORTING WASHER S32X4	7380815	21	4	119	10 11 835 7	REPAIR KIT CONNECTION HO
SUPPORTING WASHER S32X4	7380815	21	4	120	92 74 731	SEAL KIT CONNECTING HOUS
SUPPORTING WASHER S32X4	7380586	22	2	119	10 11 835 7	REPAIR KIT CONNECTION HO
SUPPORTING WASHER S32X4	7380586	20	2	120	92 74 731	SEAL KIT CONNECTING HOUS
SUPPORTING WASHER S32X4	7380291	19	2	119	10 11 835 7	REPAIR KIT CONNECTION HO
SUPPORTING WASHER S32X4	7380291	19	2	120	92 74 731	SEAL KIT CONNECTING HOUS
SURFACE SEALING	10354595	100	1	234	10 14 844 4	OIL SUMP WITH FASTENING
SWITCH	10445976	1	1	413	69 31 685 14	SAFETY LEVER CPL
SWITCH	592291814	121	1	420	10 35 008 0	CABIN
SWITCH CABINET X1	10559635	8	1	403	11 27 973 6	CABIN EL
SWITCHING ELEMENT	606655208	1	1	596	92 75 218 08	LIMIT SWITCH HOISTING ABOV
SWITCHING HOUSING	385094414	5	1	411	10 53 171 8	KEYBOARD

Description	Item	Pos.	Quantity	Sheet	Assembly	Description
SWITCHING JACKET	540272214	32	1	627	54 02 703 14	FLANGE CPL
SWIVEL BOLT BRACKET CLAM	10355006	23	2	211	11 24 114 3	EXHAUST GAS SYSTEM
SYNCHRONIZING HYDR RFK	10536350	650	1	4	01 38 376 14	LR 1300 SX
SYNCHRONIZING HYDR RFK	10536351	2	1	688	10 53 635 0	SYNCHRONIZING HYDR RFK
T-NUT M10X12	890035314	59	21	315	11 24 409 0	PANELLING SUPERSTR. INSTA
TALLOW-DROP SCREW M6X16	10137839	43	4	147	10 13 802 6	RK CYL.+CONTROL PLATE+SH
TALLOW-DROP SCREW M6X16	10137839	43	4	153	10 14 131 6	TERMINAL BOARD PRE-ASS.
TANK HYDR CPL	10560701	3	1	58	10 56 070 0	TANK INSTALLATION HYDR
TANK HYDR ST.CONST.	10560703	3	1	60	10 56 070 1	TANK HYDR CPL
TANK INSTALLATION HYDR	10560700	15	1	18	11 24 047 9	SUPERSTRUCTURE CPL
TANK MOUNTING	11314166	2	1	430	11 94 091 0	AIR CONDITIONER RFK
TAPER	7024502	170	14	30	11 28 647 6	VALVE BLOCK
TAPER	9266085	12	1	125	92 78 875	PRESSURE CUT-OFF
TAPERED ROLLER BEARING	10355730	15	1	177	11 21 593 6	PUMP ELEMENT
TAPERED ROLLER BEARING	10355731	16	1	177	11 21 593 6	PUMP ELEMENT
TAPERED ROLLER BEARING	11214718	10	1	452	10 50 351 3	DRIVING GEAR
TAPERED ROLLER BEARING	11214719	11	1	452	10 50 351 3	DRIVING GEAR
TAPERED ROLLER BEARING	11940207	11	1	391	11 94 017 7	DRIVING SHAFT
TAPERED ROLLER BEARING	7023837	10	1	391	11 94 017 7	DRIVING SHAFT
TAPERED ROLLER BEARING	7462008	12	1	396	90 01 376 2	SLEWING GEAR DRIVE
TAPERED ROLLER BEARING	746224201	3	1	396	90 01 376 2	SLEWING GEAR DRIVE
TAPERED ROLLER BEARING	746225801	4	1	471	96 93 178 01	TRACTION DRIVE
TAPERED ROLLER BEARING	761008703	3	1	471	96 93 178 01	TRACTION DRIVE
TEE	553087814	37	1	217	11 24 114 5	ASSEMBLY INSTAL.
TELESCOPE	11909669	2	1	86	59 21 041 14	DOUBLE-ACTING CYL
TEMPERATURE CONTROLLER	511657614	13	1	20	11 29 618 6	SUPERSTRUCTURE HYDR
TEMPERATURE PROBE CPL.	10152036	2	1	306	10 14 297 7	ENGINE CONTROL SENSORS
TEMPERATURE SENSOR	10424276	85	1	404	11 27 973 6	CABIN EL
TEMPERATURE SENSOR	10493626	50	1	45	11 24 519 0	SUPERSTRUCTURE EL
TEMPERATURE SENSOR	10493626	1	2	306	10 14 297 7	ENGINE CONTROL SENSORS
TEMPERATURE SENSOR	11241756	40	1	45	11 24 519 0	SUPERSTRUCTURE EL
TEMPERATURE SENSOR	11349182	8	2	217	11 24 114 5	ASSEMBLY INSTAL.
TEMPERATURE SWITCH	10513459	17	1	94	11 24 773 5	HYDR POWER UNIT
TENSION JACK HYDR CPL	10557163	2	1	468	10 55 716 1	GUIDE WHEEL UNIT CPL
TENSION PIN	616155514	11	1	519	61 61 541 14	CABLE DRUM
TENSION SPRING	7617520	51	2	436	10 28 999 3	VIBRATING SYSTEM
TERMINAL BOARD PRE-ASS.	10141316	1	1	152	10 14 131 7	REPAIR KIT CONNECTING PL
TERMINAL BOX	10566458	103	1	46	11 24 519 0	SUPERSTRUCTURE EL
TERMINAL CAP	11229635	30	3	45	11 24 519 0	SUPERSTRUCTURE EL
TERMINAL HOLDER B30	10537558	1	1	439	10 53 756 0	LAMP HOLDER CPL
TERMINAL HOUSING	540271614	2	1	626	54 02 702 14	ROPE DRUM CPL
TERMINAL HOUSING	692406008	11	1	417	11 95 272 6	SOUND TRANSMITTER EL
TERMINAL HOUSING	692406008	12	1	417	11 95 272 6	SOUND TRANSMITTER EL
THERMOSTAT	10154798	2	1	284	10 14 821 5	THERMOSTAT HOUSING ASS
THERMOSTAT	592293814	260	1	432	11 93 934 6	AIR CONDITIONING
THERMOSTAT HOUSING	10148200	1	1	284	10 14 821 5	THERMOSTAT HOUSING ASS
THERMOSTAT HOUSING ASS	10148215	380	1	224	12 42 545 4	DIESEL ENGINE
THREADED CONNECTION PI	927739401	1	1	356	93 36 755 01	OIL-GAUGING INSTRUMENT
THREADED CONNECTION PI	927739401	20	1	356	93 36 755 01	OIL-GAUGING INSTRUMENT
THREADED ELBOW JOINT	11268711	610	1	98	11 24 682 0	DISTRIBUTOR GEARBOX
THREADED ELBOW JOINT	592317014	600	1	98	11 24 682 0	DISTRIBUTOR GEARBOX
THREADED PIPE	592316114	150	1	98	11 24 682 0	DISTRIBUTOR GEARBOX
THREE PHASE CURRENT GE	10148088	1	1	295	10 14 584 5	GENERATOR, PRE-ASSEMBLE
THROTTLE SCREW	7615603	8	1	455	11 22 473 8	ADJUSTMENT
THROTTLE SCREW	7615604	9	1	455	11 22 473 8	ADJUSTMENT
THROUGH DRIVE	10129874	12	1	94	11 24 773 5	HYDR POWER UNIT
THROUGH DRIVE	10129874	300	1	139	10 12 878 7	V PUMP
THROUGH DRIVE	10130005	301	1	139	10 12 878 7	V PUMP
THROUGH DRIVE	10134521	304	1	139	10 12 878 7	V PUMP
THROUGH DRIVE	10138068	305	1	140	10 12 878 7	V PUMP

Description	Item	Pos.	Quantity	Sheet	Assembly	Description
THROUGH DRIVE	10553922	11	1	94	11 24 773 5	HYDR POWER UNIT
THROUGH-VALVE	7402781	12	1	212	11 24 114 4	FUEL SYSTEM
THRUST PIECE M12X26 X8C	790550914	15	1	321	10 57 883 5	DOOR
THRUST PIECE M12X26 X8C	790550914	13	1	323	10 57 897 6	DOOR
THRUST PIECE M12X26 X8C	790550914	4	1	325	10 57 940 0	DOOR
THRUST PIECE M12X26 X8C	790550914	4	1	326	10 56 623 7	DOOR
THRUST PIECE M12X26 X8C	790550914	13	1	327	10 56 580 8	DOOR
THRUST WASHER		46	1	352	93 88 497 01	PLANETARY GEARBOX
TIGHT FIT SLEEVE 16X20X20	10134348	3	2	228	10 14 768 6	POWER UNIT SUPPORT ATT
TIGHT FIT SLEEVE 16X20X20	9074798	3	2	299	10 11 557 7	FLYWHEEL HOUSING MOUNT
TIGHTENING STRAP HINGE PI	10530689	23	2	510	11 23 820 3	PIVOT PIECE CPL
TIGHTENING STRAP HINGE PI	10530689	12	4	523	99 34 198 14	LIEBHERR SIGN
TIGHTENING STRAP HINGE PI	10530689	10	1	553	11 28 391 3	FIXING CLAMP
TIGHTENING STRAP HINGE PI	10531873	15	2	510	11 23 820 3	PIVOT PIECE CPL
TIGHTENING STRAP HINGE PI	10531873	16	1	552	11 28 390 8	BOOM ACCESS
TIGHTENING STRAP HINGE PI	10531873	16	1	568	11 28 583 8	BOOM ACCESS
TIGHTENING STRAP HINGE PI	10531873	16	1	575	11 28 626 1	BOOM ACCESS
TIGHTENING STRAP HINGE PI	10531873	13	2	659	11 26 901 8	HOLDER CPL
TIGHTENING STRAP HINGE PI	10581173	20	2	217	11 24 114 5	ASSEMBLY INSTAL.
TILT-BACK SUPPORT	11292598	60	1	2	01 38 376 14	LR 1300 SX
TILT-BACK SUPPORTS INSTAL	11275365	10	1	525	11 29 259 8	TILT-BACK SUPPORT
TILTING-BACK SUPPORTS H	10585108	2	1	525	11 29 259 8	TILT-BACK SUPPORT
TIME RELAY	630170014	85	1	406	10 55 963 5	SWITCH CABINET X1
TIP	10574725	11	1	637	11 27 109 7	LIGHTNING ROD RFK
TIP BOOM CPL	994852114	115	1	3	01 38 376 14	LR 1300 SX
TIP BOOM MODIFICATION	918907114	116	1	3	01 38 376 14	LR 1300 SX
TIP BOOM ST.CONST.	994852014	1	1	593	99 48 521 14	TIP BOOM CPL
TOGGLE	956049414	21	4	640	99 10 116 14	ROPE GUIDE
TOOL	10560228	1	1	505	10 56 183 8	TOOL
TOOL	10561838	1	1	504	10 56 187 5	TOOL EQUIPMENT
TOOL BOX	790042514	2	1	505	10 56 183 8	TOOL
TOOL EQUIPMENT	10561875	50	1	2	01 38 376 14	LR 1300 SX
TRACTION DRIVE	969317801	6	1	467	11 89 365 0	CRAWLER CARRIER RIGHT CP
TRACTION DRIVE	969317801	6	1	478	11 89 365 1	CRAWLER CARRIER LEFT CP
TRANSPORT BRACKET CPL	971333503	20	3	467	11 89 365 0	CRAWLER CARRIER RIGHT CP
TRANSPORT BRACKET CPL	971333503	20	3	478	11 89 365 1	CRAWLER CARRIER LEFT CP
TRANSPORT DEVICE ATTACH	10142864	481	1	224	12 42 545 4	DIESEL ENGINE
TRANSPORT DEVICE ATTACH	9079823	480	1	224	12 42 545 4	DIESEL ENGINE
TRANSPORT LASHING	11305670	18	1	650	11 29 473 7	GANGWAY INTERM. SECTION
TRANSPORT LASHING	11305670	19	1	654	11 29 474 2	GANGWAY INTERM. SECTION
TRANSPORT LASHING	11305670	21	1	655	11 29 474 3	GANGWAY INTERM. SECTION
TRANSPORT LASHING	11940876	11	1	548	11 93 749 9	ASSEMBLY UNIT
TRANSPORT LASHING	11940876	11	1	566	11 93 750 1	ASSEMBLY UNIT
TRANSPORT LASHING	11940876	11	1	573	11 93 750 4	ASSEMBLY UNIT
TRANSPORTER CONSOLE	10145229	1	1	298	10 14 286 4	TRANSPORT DEVICE ATTACH
TRAVERSE	10589483	14	1	469	10 55 716 2	GUIDE WHEEL CPL
TRAVERSE	919075014	2	1	593	99 48 521 14	TIP BOOM CPL
TUBE	10190120	10	1	356	93 36 755 01	OIL-GAUGING INSTRUMENT
TUBE	11248260	11	1	594	11 24 825 8	ROPE GUIDE ST.CONST. RFK
TUBE	11250564	23	1	195	11 24 114 0	COOLER INSTALLATION WATE
TUBE	11287715	24	1	195	11 24 114 0	COOLER INSTALLATION WATE
TUBE	11290847	170	1	98	11 24 682 0	DISTRIBUTOR GEARBOX
TUBE	11910323	100	1	529	10 09 917 3	DOUBLE-ACTING CYL
TUBE	11930769	50	1	8	11 92 958 8	AIR DUCT CPL
TUBE	289057714	55	1	510	11 23 820 3	PIVOT PIECE CPL
TUBE	289057714	11	1	558	11 94 087 6	TRANSPORT LASHING
TUBE	592316414	220	1	98	11 24 682 0	DISTRIBUTOR GEARBOX
TUBE	9080660	6	1	235	10 15 529 8	OIL SUMP PRE-ASS.
TUBE	933676701	5	1	356	93 36 755 01	OIL-GAUGING INSTRUMENT
TUBE	956064714	7	2	593	99 48 521 14	TIP BOOM CPL

Description	Item	Pos.	Quantity	Sheet	Assembly	Description
TUBE	956213814	22	1	590	99 23 398 14	ROLLER SET
TUBE	957336914	17	1	581	11 28 629 9	MOUNTING PARTS
TUBE	979323301	30	1	356	93 36 755 01	OIL-GAUGING INSTRUMENT
TUBE	999832101	25	1	356	93 36 755 01	OIL-GAUGING INSTRUMENT
TUBING HYDR	10517262	2	1	619	10 54 251 6	ROPE REEVING WINCH HYDR
TUBING HYDR	10517281	2	1	701	10 51 728 0	CABIN INCLINATION RFK
TUBING HYDR	10519591	2	1	526	10 58 510 8	TILTING-BACK SUPPORTS H
TUBING HYDR	10552161	2	1	383	10 51 968 3	SG HYDR
TUBING HYDR	10554594	2	1	689	10 53 635 1	SYNCHRONIZING HYDR RFK
TUBING HYDR	10561735	2	1	714	11 27 267 1	AIR FLAPS HYDR RFK
TUBING HYDR	11235248	2	1	683	11 23 524 6	JACK-UP SYSTEM HYDR RFK
TUBING HYDR	11893005	2	1	444	11 89 300 3	UC HYDR
TUBING HYDR	11894083	2	1	677	11 89 408 0	JACK-UP SYSTEM HYDR RFK
TURBOCHARGER	10139624	1	1	292	10 14 013 6	EXHAUST TC MOUNTING
TURNBUCKLE		10	-1	701	10 51 728 0	CABIN INCLINATION RFK
TURNBUCKLE	790306414	64	1	77	10 58 163 4	CABIN SUSPENSION CPL
TURNING KNOB	10687925	80	1	410	10 03 610 7	KEYBOARD OPERATING PANE
TWIN HOOK CPL	11274829	1	1	610	11 27 480 1	HANGER
TWIST PIVOT	10529080	14	1	699	10 58 064 7	VIDEO MONITORING SYSTEM
TWO-HOLE NUT AL	11005554	17	1	215	10 30 300 7	FUEL PREFILTER
TYPE PLATE	11226148	220	1	387	51 14 347 14	SG SAFETY BLOCK
TYPE PLATE	11276851	53	1	2	01 38 376 14	LR 1300 SX
U-PROFILE	11225259	23	3	331	11 24 922 2	COVER UNDERSIDE
U-STEEL	10222995	59	2	510	11 23 820 3	PIVOT PIECE CPL
U-STEEL	10565639	11	2	521	10 58 193 7	GRATING CPL
U-STEEL	10581999	21	2	521	10 58 193 7	GRATING CPL
U-STEEL	10582001	77	1	511	11 23 820 3	PIVOT PIECE CPL
U-STEEL	10582001	22	1	521	10 58 193 7	GRATING CPL
U-STEEL	10582020	50	2	510	11 23 820 3	PIVOT PIECE CPL
UC CPL	11893648	33	1	2	01 38 376 14	LR 1300 SX
UC HYDR	11893003	2	1	443	11 89 364 8	UC CPL
UC PLATFORM	11241478	554	1	3	01 38 376 14	LR 1300 SX
UC PLATFORM	992338914	38	1	2	01 38 376 14	LR 1300 SX
UREA CONTAINER	11242408	6	1	217	11 24 114 5	ASSEMBLY INSTAL.
V PUMP	10128787	6	1	94	11 24 773 5	HYDR POWER UNIT
V PUMP	10226013	9	1	94	11 24 773 5	HYDR POWER UNIT
V PUMP	10226505	8	1	94	11 24 773 5	HYDR POWER UNIT
V PUMP	10530653	5	2	94	11 24 773 5	HYDR POWER UNIT
V PUMP	10534307	3	2	94	11 24 773 5	HYDR POWER UNIT
V-RING	10324881	10	1	170	10 32 489 2	DRIVING GEAR
V-RING	11251437	5	1	450	11 89 617 8	SEALING SET
V-RIPPED BELT	11482412	7	1	280	10 14 286 0	AIR COND. COMPRESSOR A
VALVE	10011832	13	1	228	10 14 768 6	POWER UNIT SUPPORT ATT
VALVE	10011832	14	1	252	10 12 948 0	OIL COOLER, PRE-ASSEMBLE
VALVE	10101193	201	1	30	11 28 647 6	VALVE BLOCK
VALVE	10445040	220	1	529	10 09 917 3	DOUBLE-ACTING CYL
VALVE	11224762	12	2	455	11 22 473 8	ADJUSTMENT
VALVE	11932853	2	1	40	51 16 576 14	TEMPERATURE CONTROLLER
VALVE	592293314	70	1	432	11 93 934 6	AIR CONDITIONING
VALVE	7026676	203	1	30	11 28 647 6	VALVE BLOCK
VALVE BLOCK	10225408	4	1	85	10 51 969 5	A-FRAME ERECTION HYDR
VALVE BLOCK	10351486	3	1	20	11 29 618 6	SUPERSTRUCTURE HYDR
VALVE BLOCK	11286476	1	1	20	11 29 618 6	SUPERSTRUCTURE HYDR
VALVE BLOCK	592145814	4	1	20	11 29 618 6	SUPERSTRUCTURE HYDR
VALVE BLOCK FEED PRESSUR	511637714	15	1	94	11 24 773 5	HYDR POWER UNIT
VALVE BLOCK SINGLE DISK	10541514	6	1	20	11 29 618 6	SUPERSTRUCTURE HYDR
VALVE BRIDGE	10119695	2	2	245	10 14 843 8	ROCKER ARM BRACKET CPL.
VALVE HOLDER	954598503	12	2	333	11 24 483 7	MOUNTING PARTS SUPERST
VALVE HOLDER	954598503	13	1	343	10 51 969 7	NEEDLE LUFFING WINCH
VALVE MOUNTING	994001014	28	1	618	10 51 743 9	ROPE LUG CPL RFK

Description	Item	Pos.	Quantity	Sheet	Assembly	Description
VALVE PLATE	10575966	17	1	333	11 24 483 7	MOUNTING PARTS SUPERST
VALVE SCREW	11214946	1	1	456	10 44 656 6	SHUTTLE VALVE
VALVE SEAT	9278874	10	1	125	92 78 875	PRESSURE CUT-OFF
VALVE SLEEVE	9267340	10	1	118	92 67 343	VENTILATION VALVE
VARIABLE DISPLACEMENT MO	11251232	2	1	486	11 26 260 6	WINCH 1 HYDR
VARIABLE DISPLACEMENT MO	11251232	2	1	501	11 26 261 1	WINCH 2 HYDR
VARIABLE DISPLACEMENT MO	512405914	3	2	446	11 89 300 5	TUBING HYDR
VENTILATION AND AERATION	721108801	7	1	356	93 36 755 01	OIL-GAUGING INSTRUMENT
VENTILATION CONNECTING PI	927501901	13	1	356	93 36 755 01	OIL-GAUGING INSTRUMENT
VENTILATION FILTER	505104914	260	1	98	11 24 682 0	DISTRIBUTOR GEARBOX
VENTILATION FILTER	693113814	485	1	98	11 24 682 0	DISTRIBUTOR GEARBOX
VENTILATION SCREW	485581914	54	1	51	10 56 645 8	TERMINAL BOX
VENTILATION SCREW	7412942	1	1	215	10 30 300 7	FUEL PREFILTER
VENTILATION VALVE		82	1	352	93 88 497 01	PLANETARY GEARBOX
VENTILATION VALVE	10351239	205	2	686	59 21 826 14	SUPPORT CYLINDER
VENTILATION VALVE	540136314	3	4	85	10 51 969 5	A-FRAME ERECTION HYDR
VENTILATION VALVE	592089814	69	1	380	99 04 645 14	DRIVE
VENTILATION VALVE	9267343	6	2	117	10 11 835 0	CONNECTION HOUSING
VENTILATOR RING	10352187	3	1	43	10 22 592 5	COOLER MOTOR
VIBRATING SYSTEM	10289993	50	1	434	10 22 506 8	OPERATOR SEAT
VIDEO MONITORING SYSTEM	10580647	11	1	694	11 89 400 8	VIDEO MONITORING SYSTEM
VIDEO MONITORING SYSTEM	11894008	704	1	4	01 38 376 14	LR 1300 SX
VOLTAGE TRANSFORMER	693183914	91	1	406	10 55 963 5	SWITCH CABINET X1
VOLUM CONTROL VALVE	12401396	230	1	258	10 15 085 7	HIGH PRESSURE PUMP W.FA
VORTEX WHEEL	11238878	10	1	587	69 28 155 14	WIND TRANSMITTER
WASHER		58	1	352	93 88 497 01	PLANETARY GEARBOX
WASHER	10522188	4	1	426	59 22 871 14	FRONT WINDOW CPL
WASHER	10687926	81	1	410	10 03 610 7	KEYBOARD OPERATING PANE
WASHER	11293195	7	1	457	10 44 510 2	QUICK RELEASE FITTING
WASHER	11922654	13	1	203	10 57 423 9	COOLER MOTOR
WASHER	540271214	25	6	625	54 02 701 14	PLANETARY STAGE
WASHER	540271514	29	1	625	54 02 701 14	PLANETARY STAGE
WASHER	540271914	3	1	627	54 02 703 14	FLANGE CPL
WASHER	540273114	11	1	629	54 02 705 14	DRIVE UNIT CPL
WASHER	592288214	32	1	426	59 22 871 14	FRONT WINDOW CPL
WASHER	7023834	5	1	390	11 94 017 6	HYDRAULIC PARTS DRIVING G
WASHER	927562301	5	1	396	90 01 376 2	SLEWING GEAR DRIVE
WASHER 1.9X71X118 PA 6 G	11942312	24	4	535	11 27 536 5	TILT-BACK SUPPORTS INSTAL
WASHER 10/30X50 S355J2;EN	11249738	11	2	212	11 24 114 4	FUEL SYSTEM
WASHER 12/30X30 S355J2;EN	10519789	74	4	207	11 24 114 2	SUCTION UNIT AIR
WASHER 12/50X5 POLYURE.	10351046	57	1	8	11 92 958 8	AIR DUCT CPL
WASHER 129/102X2 ST 12.03	385151114	6	1	370	99 29 258 14	LUG SHEAVE SET
WASHER 165/132X1 ST 12.03	385123814	13	2	370	99 29 258 14	LUG SHEAVE SET
WASHER 165/132X2 ST 12.03	949352914	12	4	370	99 29 258 14	LUG SHEAVE SET
WASHER 200/103X1 DC01;EN	385255414	16	4	681	11 89 568 6	SELF-LOADING SYSTEM RFK
WASHER 200/103X2 DC01;EN	385255314	15	4	681	11 89 568 6	SELF-LOADING SYSTEM RFK
WASHER 200/103X4 S235JR;E	385255514	17	4	681	11 89 568 6	SELF-LOADING SYSTEM RFK
WASHER 21/37X4 PA 6 G	948967314	3	4	585	11 28 357 6	MOUNTING PARTS
WASHER 225/81X26 PA 6 G	970855603	6	2	541	99 14 137 14	DEFLECTION PULLEY CPL
WASHER 25.2/32X3 POM	958471614	18	1	321	10 57 883 5	DOOR
WASHER 25.2/32X3 POM	958471614	18	1	323	10 57 897 6	DOOR
WASHER 25.2/32X3 POM	958471614	7	1	325	10 57 940 0	DOOR
WASHER 25.2/32X3 POM	958471614	7	1	326	10 56 623 7	DOOR
WASHER 25.2/32X3 POM	958471614	15	1	327	10 56 580 8	DOOR
WASHER 34X45X1	9078522	6	2	246	11 44 800 5	ROCKER ARM BRACKET PRE
WASHER 46/70X2 POLYAMID	10593096	23	8	83	10 51 969 4	A-FRAME ERECTION CYL INST
WASHER 52/92X1 PA 6 G	11241005	22	16	83	10 51 969 4	A-FRAME ERECTION CYL INST
WASHER 52/92X3 PA 6 G	949740514	15	20	83	10 51 969 4	A-FRAME ERECTION CYL INST
WASHER 53/10X5 AISI 316	10567619	13	2	195	11 24 114 0	COOLER INSTALLATION WATE
WASHER 58/90X2 GUMMI NBR	949942814	16	4	561	11 93 703 7	ANCHORING ROD CPL

Description	Item	Pos.	Quantity	Sheet	Assembly	Description
WASHER 58/90X2 GUMMI NBR	949942814	16	4	570	11 93 702 0	ANCHORING ROD CPL
WASHER 58/90X2 GUMMI NBR	949942814	39	4	581	11 28 629 9	MOUNTING PARTS
WASHER 76/13X6 LH355-40;1	947084514	22	12	341	99 29 803 14	LASHING BALLAST
WASHER 81/200X74 PA 6 G	948773814	5	16	541	99 14 137 14	DEFLECTION PULLEY CPL
WASHER 9/16X25 S355J2;EN	10553403	46	6	217	11 24 114 5	ASSEMBLY INSTAL.
WASHER AEHNL.ISO 7089 16 P	420053101	50	20	633	10 55 372 1	ROOF RAILING RFK
WASHER DIN 34816 10.5 PA 6.	485568514	9	4	374	99 29 392 14	SIDE COMPONENT
WASHER DIN 34816 10.5 PA 6.	485568514	17	12	376	99 29 386 14	BRACKET CPL
WASHER DIN 34816 10.5 PA 6.	485568514	17	12	377	99 29 434 14	BRACKET CPL
WASHER DIN 34816 13 PA 6.6	485568614	11	8	559	11 94 087 8	ASSEMBLY UNIT
WASHER DIN 440 R11 ST	420600408	13	6	79	10 56 067 3	BATTERY INSTALLATION CPL
WASHER DIN 6340 10.5 C35	421300214	72	4	60	10 56 070 1	TANK HYDR CPL
WASHER DIN 6340 10.5 C35	421300214	71	4	189	10 51 948 1	SUCTION PIPE OIL
WASHER DIN 6340 10.5 C35	421300214	74	24	196	11 24 114 0	COOLER INSTALLATION WATE
WASHER DIN 6340 10.5 C35	421300214	71	22	202	11 24 114 1	COOLER INSTALLATION CHA
WASHER DIN 6340 10.5 C35	421300214	72	6	207	11 24 114 2	SUCTION UNIT AIR
WASHER DIN 6340 10.5 C35	421300214	71	28	211	11 24 114 3	EXHAUST GAS SYSTEM
WASHER DIN 6340 10.5 C35	421300214	94	12	218	11 24 114 5	ASSEMBLY INSTAL.
WASHER DIN 6340 10.5 C35	421300214	72	2	311	11 24 114 6	COVER
WASHER DIN 6340 13 ST	4635283	73	12	189	10 51 948 1	SUCTION PIPE OIL
WASHER DIN 6340 13 ST	4635283	72	8	211	11 24 114 3	EXHAUST GAS SYSTEM
WASHER DIN 6340 13 ST	4635283	95	2	218	11 24 114 5	ASSEMBLY INSTAL.
WASHER DIN 6340 17 C35	421300414	70	3	58	10 56 070 0	TANK INSTALLATION HYDR
WASHER DIN 6340 17 C35	421300414	70	3	64	10 56 073 2	FUEL TANK ASSY.
WASHER DIN 6340 21 C35	10567956	5	8	467	11 89 365 0	CRAWLER CARRIER RIGHT CP
WASHER DIN 6340 21 C35	10567956	5	8	478	11 89 365 1	CRAWLER CARRIER LEFT CP
WASHER DIN 6340 25	883203014	73	2	188	11 24 113 8	MOTOR BEARING CPL
WASHER DIN 6340 8.4 C35	421300514	77	4	188	11 24 113 8	MOTOR BEARING CPL
WASHER DIN 6340 8.4 C35	421300514	72	20	196	11 24 114 0	COOLER INSTALLATION WATE
WASHER DIN 6340 8.4 C35	421300514	70	28	202	11 24 114 1	COOLER INSTALLATION CHA
WASHER DIN 6340 8.4 C35	421300514	70	4	205	11 28 574 7	WP
WASHER DIN 6340 8.4 C35	421300514	71	4	207	11 24 114 2	SUCTION UNIT AIR
WASHER DIN 6916 17 C45	460024203	16	2	361	10 51 968 6	LUG SUPERSTRUCTURE CPL
WASHER DIN 6916 17 C45	460024203	8	8	374	99 29 392 14	SIDE COMPONENT
WASHER DIN 6916 17 C45	460024203	15	6	376	99 29 386 14	BRACKET CPL
WASHER DIN 6916 17 C45	460024203	15	6	377	99 29 434 14	BRACKET CPL
WASHER DIN 6916 21 C45	460022203	11	48	382	10 51 968 2	SG SUPERSTRUCTURE
WASHER DIN 6916 25 C45	460014603	74	2	188	11 24 113 8	MOTOR BEARING CPL
WASHER DIN 6916 25 C45	460014603	9	45	467	11 89 365 0	CRAWLER CARRIER RIGHT CP
WASHER DIN 6916 25 C45	460014603	9	45	478	11 89 365 1	CRAWLER CARRIER LEFT CP
WASHER DIN 7349 17 ST	421600901	53	54	467	11 89 365 0	CRAWLER CARRIER RIGHT CP
WASHER DIN 7349 17 ST	421600901	53	54	478	11 89 365 1	CRAWLER CARRIER LEFT CP
WASHER DIN 7349 6.4	4000648	70	9	195	11 24 114 0	COOLER INSTALLATION WATE
WASHER DIN 7989 11 ST	421700508	88	48	335	11 24 483 7	MOUNTING PARTS SUPERST
WASHER DIN 7989-B 18 ST;	421700314	36	4	94	11 24 773 5	HYDR POWER UNIT
WASHER DIN EN 28738 20 ST;	421101714	5	2	585	11 28 357 6	MOUNTING PARTS
WASHER DIN EN 28738 20 ST;	421101714	36	2	640	99 10 116 14	ROPE GUIDE
WASHER DIN EN 28738 20 ST;	421101714	4	1	644	99 06 789 14	FORK
WASHER DIN EN 28738 22 ST;	421101814	3	2	475	10 50 179 5	ACCESS CPL
WASHER DIN EN 28738 26 ST;	421102214	24	8	77	10 58 163 4	CABIN SUSPENSION CPL
WASHER DIN EN 28738 26 ST;	421102214	3	4	82	99 23 451 14	PIVOT BOLT INSTALLATION
WASHER DIN EN 28738 26 ST;	421102214	36	2	581	11 28 629 9	MOUNTING PARTS
WASHER DIN EN 28738 30 ST;	421102414	20	10	538	11 24 444 4	A-FRAME 1 CPL
WASHER DIN EN 28738 36 ST;	421102914	46	2	640	99 10 116 14	ROPE GUIDE
WASHER DIN EN 28738 36 ST;	421102914	3	12	641	99 23 405 14	INTERMEDIATE TENSIONING
WASHER DIN EN 28738 36 ST;	421102914	3	12	643	99 23 420 14	INTERMEDIATE TENSIONING
WASHER DIN EN 28738 36 ST;	421102914	6	14	645	97 05 997 03	INTERMEDIATE TENSIONING
WASHER DIN EN 28738 40 ST	421103014	14	3	77	10 58 163 4	CABIN SUSPENSION CPL
WASHER DIN EN 28738 40 ST	421103014	78	4	188	11 24 113 8	MOTOR BEARING CPL
WASHER DIN EN 28738 40 ST	421103014	18	8	343	10 51 969 7	NEEDLE LUFFING WINCH

Description	Item	Pos.	Quantity	Sheet	Assembly	Description
WASHER DIN EN 28738 40 ST	421103014	12	2	593	99 48 521 14	TIP BOOM CPL
WASHER DIN EN 28738 45 ST;	421103214	19	2	83	10 51 969 4	A-FRAME ERECTION CYL INST
WASHER DIN EN 28738 45 ST;	421103214	37	4	581	11 28 629 9	MOUNTING PARTS
WASHER DIN EN 28738 45 ST;	421103214	13	4	593	99 48 521 14	TIP BOOM CPL
WASHER DIN EN 28738 50 ST;	421103314	28	12	593	99 48 521 14	TIP BOOM CPL
WASHER DIN EN 28738 50 ST;	421103314	13	2	594	11 24 825 8	ROPE GUIDE ST.CONST. RFK
WASHER DIN EN 28738 50 ST;	421103314	20	1	666	11 23 619 7	SELF-LOADING SYSTEM RFK
WASHER DIN EN 28738 55 ST;	421103414	15	2	561	11 93 703 7	ANCHORING ROD CPL
WASHER DIN EN 28738 55 ST;	421103414	15	2	570	11 93 702 0	ANCHORING ROD CPL
WASHER DIN EN 28738 55 ST;	421103414	38	16	581	11 28 629 9	MOUNTING PARTS
WASHER DIN EN 28738 55 ST;	421103414	14	1	593	99 48 521 14	TIP BOOM CPL
WASHER DIN EN 28738 60 ST;	421103514	42	2	640	99 10 116 14	ROPE GUIDE
WASHER DIN EN 28738 60 ST;	421103514	24	12	660	10 51 971 3	SELF-LOADING SYSTEM RFK
WASHER DIN EN 28738 65 ST;	421103614	18	6	341	99 29 803 14	LASHING BALLAST
WASHER DIN EN 28738 65 ST;	421103614	13	4	522	99 30 060 14	ANCHORING ROD CPL
WASHER DIN EN 28738 65 ST;	421103614	13	4	560	99 24 404 14	ANCHORING ROD CPL
WASHER DIN EN 28738 65 ST;	421103614	13	4	569	99 24 405 14	ANCHORING ROD CPL
WASHER DIN EN 28738 65 ST;	421103614	13	8	576	99 24 406 14	ANCHORING ROD CPL
WASHER DIN EN 28738 65 ST;	421103614	13	4	588	99 24 594 14	ANCHORING ROD CPL
WASHER DIN EN 28738 75 ST;	421103714	14	8	542	99 26 417 14	ANCHORING ROD CPL
WASHER DIN EN 28738 75 ST;	421103714	16	16	588	99 24 594 14	ANCHORING ROD CPL
WASHER DIN EN 28738 80 ST;	421103814	12	8	510	11 23 820 3	PIVOT PIECE CPL
WASHER DIN EN 28738 80 ST;	421103814	11	2	550	11 28 726 4	PIN CPL
WASHER DIN EN 28738 80 ST;	421103814	20	2	660	10 51 971 3	SELF-LOADING SYSTEM RFK
WASHER EN 14399-6 12 C45	460022703	37	14	94	11 24 773 5	HYDR POWER UNIT
WASHER EN 14399-6 12 C45	460022703	89	34	335	11 24 483 7	MOUNTING PARTS SUPERST
WASHER EN 14399-6 12 C45	460022703	5	4	373	99 29 389 14	SIDE COMPONENT
WASHER EN 14399-6 12 C45	460022703	5	4	374	99 29 392 14	SIDE COMPONENT
WASHER EN 14399-6 12 C45	460022703	14	16	376	99 29 386 14	BRACKET CPL
WASHER EN 14399-6 12 C45	460022703	14	16	377	99 29 434 14	BRACKET CPL
WASHER EN 14399-6 12 C45	460022703	71	1	653	11 30 567 0	TRANSPORT LASHING
WASHER EN 14399-6 30 ST	421500614	7	30	467	11 89 365 0	CRAWLER CARRIER RIGHT CP
WASHER EN 14399-6 30 ST	421500614	7	30	478	11 89 365 1	CRAWLER CARRIER LEFT CP
WASHER ISO 7089	11219067	7	2	214	10 55 091 1	ADD-ON PRELIMINARY FUEL F
WASHER ISO 7089 10	11932238	10	16	203	10 57 423 9	COOLER MOTOR
WASHER ISO 7089 10 A4	420001114	73	4	8	11 92 958 8	AIR DUCT CPL
WASHER ISO 7089 10 A4	420001114	15	8	57	10 51 961 6	OIL COOLER INSTALLATION
WASHER ISO 7089 10 A4	420001114	70	44	60	10 56 070 1	TANK HYDR CPL
WASHER ISO 7089 10 A4	420001114	70	6	65	10 56 073 3	FUEL TANK CPL
WASHER ISO 7089 10 A4	420001114	18	4	79	10 56 067 3	BATTERY INSTALLATION CPL
WASHER ISO 7089 10 A4	420001114	4	8	81	10 56 069 4	MODULES INSTALLATION
WASHER ISO 7089 10 A4	420001114	70	42	188	11 24 113 8	MOTOR BEARING CPL
WASHER ISO 7089 10 A4	420001114	70	4	189	10 51 948 1	SUCTION PIPE OIL
WASHER ISO 7089 10 A4	420001114	70	6	191	10 57 532 2	INTAKE PIPE OIL CPL
WASHER ISO 7089 10 A4	420001114	73	28	196	11 24 114 0	COOLER INSTALLATION WATE
WASHER ISO 7089 10 A4	420001114	97	4	218	11 24 114 5	ASSEMBLY INSTAL.
WASHER ISO 7089 10 A4	420001114	71	11	311	11 24 114 6	COVER
WASHER ISO 7089 10 A4	420001114	55	40	315	11 24 409 0	PANELLING SUPERSTR. INSTA
WASHER ISO 7089 10 A4	420001114	12	36	329	10 54 591 0	MOTOR COWLING
WASHER ISO 7089 10 A4	420001114	78	53	335	11 24 483 7	MOUNTING PARTS SUPERST
WASHER ISO 7089 10 A4	420001114	14	16	340	10 52 656 0	MOUNTING PARTS
WASHER ISO 7089 10 A4	420001114	27	6	402	11 27 970 6	CABIN CPL
WASHER ISO 7089 10 A4	420001114	65	36	510	11 23 820 3	PIVOT PIECE CPL
WASHER ISO 7089 10 A4	420001114	13	2	545	99 29 588 14	SUPPORT
WASHER ISO 7089 10 A4	420001114	13	4	546	10 35 063 3	FASTENER
WASHER ISO 7089 10 A4	420001114	16	4	554	11 28 397 7	SUMP PAN CPL
WASHER ISO 7089 10 A4	420001114	16	4	555	11 28 397 8	SUMP PAN CPL
WASHER ISO 7089 10 A4	420001114	16	8	556	11 28 399 5	SUMP PAN CPL
WASHER ISO 7089 10 A4	420001114	16	8	557	11 28 399 7	SUMP PAN CPL
WASHER ISO 7089 10 A4	420001114	68	8	581	11 28 629 9	MOUNTING PARTS

Description	Item	Pos.	Quantity	Sheet	Assembly	Description
WASHER ISO 7089 10 A4	420001114	22	1	584	10 59 863 3	PENDULUM CPL
WASHER ISO 7089 10 A4	420001114	4	8	585	11 28 357 6	MOUNTING PARTS
WASHER ISO 7089 10 A4	420001114	10	2	591	99 30 800 14	HOIST LIMIT SWITCH INSTAL.
WASHER ISO 7089 10 A4	420001114	17	8	593	99 48 521 14	TIP BOOM CPL
WASHER ISO 7089 10 A4	420001114	37	32	633	10 55 372 1	ROOF RAILING RFK
WASHER ISO 7089 10 A4	420001114	16	6	640	99 10 116 14	ROPE GUIDE
WASHER ISO 7089 10 A4	420001114	70	6	718	11 31 446 3	CHARGE AIR PIPE CPL
WASHER ISO 7089 10 ST	10554336	70	1	193	11 24 113 9	ADD-ON PARTS DIESEL ENGIN
WASHER ISO 7089 12 A4	4901782	75	3	8	11 92 958 8	AIR DUCT CPL
WASHER ISO 7089 12 A4	4901782	10	1	47	10 53 048 9	FUSE HOLDER
WASHER ISO 7089 12 A4	4901782	71	12	60	10 56 070 1	TANK HYDR CPL
WASHER ISO 7089 12 A4	4901782	20	2	77	10 58 163 4	CABIN SUSPENSION CPL
WASHER ISO 7089 12 A4	4901782	11	2	79	10 56 067 3	BATTERY INSTALLATION CPL
WASHER ISO 7089 12 A4	4901782	76	4	188	11 24 113 8	MOTOR BEARING CPL
WASHER ISO 7089 12 A4	4901782	70	20	192	10 58 017 0	RETURN PIPE
WASHER ISO 7089 12 A4	4901782	72	3	202	11 24 114 1	COOLER INSTALLATION CHA
WASHER ISO 7089 12 A4	4901782	8	2	439	10 53 756 0	LAMP HOLDER CPL
WASHER ISO 7089 12 A4	4901782	23	15	467	11 89 365 0	CRAWLER CARRIER RIGHT CP
WASHER ISO 7089 12 A4	4901782	23	15	478	11 89 365 1	CRAWLER CARRIER LEFT CP
WASHER ISO 7089 12 A4	4901782	23	24	480	11 31 390 8	CENTRE PART CPL
WASHER ISO 7089 12 A4	4901782	22	16	510	11 23 820 3	PIVOT PIECE CPL
WASHER ISO 7089 12 A4	4901782	14	4	559	11 94 087 8	ASSEMBLY UNIT
WASHER ISO 7089 12 A4	4901782	18	2	593	99 48 521 14	TIP BOOM CPL
WASHER ISO 7089 12 A4	4901782	49	10	633	10 55 372 1	ROOF RAILING RFK
WASHER ISO 7089 12 A4	4901782	12	6	637	11 27 109 7	LIGHTNING ROD RFK
WASHER ISO 7089 12 A4	4901782	25	2	699	10 58 064 7	VIDEO MONITORING SYSTEM
WASHER ISO 7089 13	10289804	8	17	299	10 11 557 7	FLYWHEEL HOUSING MOUNT
WASHER ISO 7089 16	10544172	72	48	188	11 24 113 8	MOTOR BEARING CPL
WASHER ISO 7089 16	10544172	102	2	335	11 24 483 7	MOUNTING PARTS SUPERST
WASHER ISO 7089 16	10544172	14	4	382	10 51 968 2	SG SUPERSTRUCTURE
WASHER ISO 7089 16	10544172	36	12	467	11 89 365 0	CRAWLER CARRIER RIGHT CP
WASHER ISO 7089 16	10544172	36	12	478	11 89 365 1	CRAWLER CARRIER LEFT CP
WASHER ISO 7089 16	10544172	15	28	480	11 31 390 8	CENTRE PART CPL
WASHER ISO 7089 16	10544172	43	8	510	11 23 820 3	PIVOT PIECE CPL
WASHER ISO 7089 16	10544172	26	4	552	11 28 390 8	BOOM ACCESS
WASHER ISO 7089 16	10544172	26	4	568	11 28 583 8	BOOM ACCESS
WASHER ISO 7089 16	10544172	26	4	575	11 28 626 1	BOOM ACCESS
WASHER ISO 7089 16	10544172	40	8	681	11 89 568 6	SELF-LOADING SYSTEM RFK
WASHER ISO 7089 17/30X3 A4	4901893	71	4	193	11 24 113 9	ADD-ON PARTS DIESEL ENGIN
WASHER ISO 7089 20	10544174	75	2	207	11 24 114 2	SUCTION UNIT AIR
WASHER ISO 7089 20	10544174	21	2	467	11 89 365 0	CRAWLER CARRIER RIGHT CP
WASHER ISO 7089 20	10544174	21	2	478	11 89 365 1	CRAWLER CARRIER LEFT CP
WASHER ISO 7089 20	10544174	19	4	480	11 31 390 8	CENTRE PART CPL
WASHER ISO 7089 20	10544174	14	4	497	11 22 050 0	WINCHES INSTALLATION
WASHER ISO 7089 20	10544174	14	4	503	11 22 050 1	WINCHES INSTALLATION
WASHER ISO 7089 20	10544174	15	8	538	11 24 444 4	A-FRAME 1 CPL
WASHER ISO 7089 20	10544174	12	4	559	11 94 087 8	ASSEMBLY UNIT
WASHER ISO 7089 20	10544174	17	8	618	10 51 743 9	ROPE LUG CPL RFK
WASHER ISO 7089 20	10544174	4	1	642	99 10 125 14	FORK
WASHER ISO 7089 24	10544176	33	12	467	11 89 365 0	CRAWLER CARRIER RIGHT CP
WASHER ISO 7089 24	10544176	33	12	478	11 89 365 1	CRAWLER CARRIER LEFT CP
WASHER ISO 7089 24/13X2.5 S	11233289	121	4	30	11 28 647 6	VALVE BLOCK
WASHER ISO 7089 27	420002601	29	4	640	99 10 116 14	ROPE GUIDE
WASHER ISO 7089 3 A4	485546414	6	4	440	11 30 962 5	HOLDER CPL
WASHER ISO 7089 30	10544177	28	64	467	11 89 365 0	CRAWLER CARRIER RIGHT CP
WASHER ISO 7089 30	10544177	13	4	469	10 55 716 2	GUIDE WHEEL CPL
WASHER ISO 7089 30	10544177	28	64	478	11 89 365 1	CRAWLER CARRIER LEFT CP
WASHER ISO 7089 4 A4	420000314	4	3	438	97 07 857 03	SPIRIT LEVEL ASSY.
WASHER ISO 7089 42	420003714	36	4	538	11 24 444 4	A-FRAME 1 CPL
WASHER ISO 7089 42	420003714	17	2	559	11 94 087 8	ASSEMBLY UNIT

Description	Item	Pos.	Quantity	Sheet	Assembly	Description
WASHER ISO 7089 42	420003714	27	10	590	99 23 398 14	ROLLER SET
WASHER ISO 7089 5 A4	420005214	13	2	71	11 26 557 2	MOUNTING PARTS
WASHER ISO 7089 5 A4	420005214	11	8	80	11 31 093 2	LIMIT SWITCH INSTALLATION
WASHER ISO 7089 5 A4	420005214	5	40	81	10 56 069 4	MODULES INSTALLATION
WASHER ISO 7089 5 A4	420005214	90	2	218	11 24 114 5	ASSEMBLY INSTAL.
WASHER ISO 7089 5 A4	420005214	63	16	510	11 23 820 3	PIVOT PIECE CPL
WASHER ISO 7089 5 A4	420005214	33	8	581	11 28 629 9	MOUNTING PARTS
WASHER ISO 7089 5 A4	420005214	14	16	582	11 28 610 5	RETAINING DEVICE CPL
WASHER ISO 7089 5 A4	420005214	42	9	681	11 89 568 6	SELF-LOADING SYSTEM RFK
WASHER ISO 7089 5 A4	420005214	17	2	720	10 52 155 4	REFUELLING SYSTEM RFK
WASHER ISO 7089 6 A4	420000414	70	4	8	11 92 958 8	AIR DUCT CPL
WASHER ISO 7089 6 A4	420000414	60	4	51	10 56 645 8	TERMINAL BOX
WASHER ISO 7089 6 A4	420000414	91	29	218	11 24 114 5	ASSEMBLY INSTAL.
WASHER ISO 7089 6 A4	420000414	44	10	315	11 24 409 0	PANELLING SUPERSTR. INSTA
WASHER ISO 7089 6 A4	420000414	23	14	402	11 27 970 6	CABIN CPL
WASHER ISO 7089 6 A4	420000414	7	8	439	10 53 756 0	LAMP HOLDER CPL
WASHER ISO 7089 6 A4	420000414	50	6	467	11 89 365 0	CRAWLER CARRIER RIGHT CP
WASHER ISO 7089 6 A4	420000414	50	6	478	11 89 365 1	CRAWLER CARRIER LEFT CP
WASHER ISO 7089 6 A4	420000414	30	24	480	11 31 390 8	CENTRE PART CPL
WASHER ISO 7089 6 A4	420000414	12	3	497	11 22 050 0	WINCHES INSTALLATION
WASHER ISO 7089 6 A4	420000414	12	3	503	11 22 050 1	WINCHES INSTALLATION
WASHER ISO 7089 6 A4	420000414	64	56	510	11 23 820 3	PIVOT PIECE CPL
WASHER ISO 7089 6 A4	420000414	12	36	521	10 58 193 7	GRATING CPL
WASHER ISO 7089 6 A4	420000414	29	18	538	11 24 444 4	A-FRAME 1 CPL
WASHER ISO 7089 6 A4	420000414	17	1	554	11 28 397 7	SUMP PAN CPL
WASHER ISO 7089 6 A4	420000414	17	1	555	11 28 397 8	SUMP PAN CPL
WASHER ISO 7089 6 A4	420000414	17	1	556	11 28 399 5	SUMP PAN CPL
WASHER ISO 7089 6 A4	420000414	17	1	557	11 28 399 7	SUMP PAN CPL
WASHER ISO 7089 6 A4	420000414	3	10	614	11 22 322 6	MODEM CPL RFK
WASHER ISO 7089 6 A4	420000414	13	2	616	11 21 552 4	ANGLE INDICATION RFK
WASHER ISO 7089 6 A4	420000414	26	2	618	10 51 743 9	ROPE LUG CPL RFK
WASHER ISO 7089 6 A4	420000414	34	34	633	10 55 372 1	ROOF RAILING RFK
WASHER ISO 7089 6 A4	420000414	21	4	649	10 55 280 7	GRATING CPL
WASHER ISO 7089 6 A4	420000414	19	4	657	10 55 514 8	FALL PROTECTION RFK
WASHER ISO 7089 8 A4	420001014	72	6	8	11 92 958 8	AIR DUCT CPL
WASHER ISO 7089 8 A4	420001014	14	4	71	11 26 557 2	MOUNTING PARTS
WASHER ISO 7089 8 A4	420001014	67	6	77	10 58 163 4	CABIN SUSPENSION CPL
WASHER ISO 7089 8 A4	420001014	75	16	188	11 24 113 8	MOTOR BEARING CPL
WASHER ISO 7089 8 A4	420001014	71	6	196	11 24 114 0	COOLER INSTALLATION WATE
WASHER ISO 7089 8 A4	420001014	70	4	207	11 24 114 2	SUCTION UNIT AIR
WASHER ISO 7089 8 A4	420001014	70	4	212	11 24 114 4	FUEL SYSTEM
WASHER ISO 7089 8 A4	420001014	92	30	218	11 24 114 5	ASSEMBLY INSTAL.
WASHER ISO 7089 8 A4	420001014	34	21	313	11 24 409 0	PANELLING SUPERSTR. INSTA
WASHER ISO 7089 8 A4	420001014	16	12	329	10 54 591 0	MOTOR COWLING
WASHER ISO 7089 8 A4	420001014	87	26	335	11 24 483 7	MOUNTING PARTS SUPERST
WASHER ISO 7089 8 A4	420001014	14	2	343	10 51 969 7	NEEDLE LUFFING WINCH
WASHER ISO 7089 8 A4	420001014	17	6	382	10 51 968 2	SG SUPERSTRUCTURE
WASHER ISO 7089 8 A4	420001014	20	18	402	11 27 970 6	CABIN CPL
WASHER ISO 7089 8 A4	420001014	5	2	440	11 30 962 5	HOLDER CPL
WASHER ISO 7089 8 A4	420001014	12	6	480	11 31 390 8	CENTRE PART CPL
WASHER ISO 7089 8 A4	420001014	44	18	510	11 23 820 3	PIVOT PIECE CPL
WASHER ISO 7089 8 A4	420001014	14	8	523	99 34 198 14	LIEBHERR SIGN
WASHER ISO 7089 8 A4	420001014	22	4	535	11 27 536 5	TILT-BACK SUPPORTS INSTAL
WASHER ISO 7089 8 A4	420001014	13	4	591	99 30 800 14	HOIST LIMIT SWITCH INSTAL.
WASHER ISO 7089 8 A4	420001014	35	14	593	99 48 521 14	TIP BOOM CPL
WASHER ISO 7089 8 A4	420001014	48	82	633	10 55 372 1	ROOF RAILING RFK
WASHER ISO 7089 8 A4	420001014	13	12	635	11 24 147 8	UC PLATFORM
WASHER ISO 7089 8 A4	420001014	21	2	647	10 55 601 0	FALL PROTECTION RFK
WASHER ISO 7089 8 A4	420001014	15	4	649	10 55 280 7	GRATING CPL
WASHER ISO 7089 8 A4	420001014	70	1	653	11 30 567 0	TRANSPORT LASHING

Description	Item	Pos.	Quantity	Sheet	Assembly	Description
WASHER ISO 7089 8 A4	420001014	41	4	681	11 89 568 6	SELF-LOADING SYSTEM RFK
WASHER ISO 7089 8 A4	420001014	28	6	699	10 58 064 7	VIDEO MONITORING SYSTEM
WASHER ISO 7089 8 A4	420001014	7	1	700	10 57 848 6	MONITOR CABIN ADD-ON
WASHER ISO 7089 8 A4	420001014	7	4	704	11 22 037 2	FOOT PEDAL EL INSTALLATIO
WASHER ISO 7089 8 A4	420001014	15	3	711	10 52 293 0	SG TACHOGENERATOR RFK
WASHER ISO 7089 8 A4	420001014	14	2	720	10 52 155 4	REFUELLING SYSTEM RFK
WASHER ISO 7092 6 CU;	420250114	6	4	711	10 52 293 0	SG TACHOGENERATOR RFK
WASHER ISO 7093-1 10	11932236	12	4	203	10 57 423 9	COOLER MOTOR
WASHER ISO 7093-1 10 A4	10540511	74	18	8	11 92 958 8	AIR DUCT CPL
WASHER ISO 7093-1 10 A4	10540511	14	14	57	10 51 961 6	OIL COOLER INSTALLATION
WASHER ISO 7093-1 10 A4	10540511	7	2	68	10 55 268 1	DRIVER INSTALLATION
WASHER ISO 7093-1 10 A4	10540511	55	4	77	10 58 163 4	CABIN SUSPENSION CPL
WASHER ISO 7093-1 10 A4	10540511	4	4	79	10 56 067 3	BATTERY INSTALLATION CPL
WASHER ISO 7093-1 10 A4	10540511	70	51	311	11 24 114 6	COVER
WASHER ISO 7093-1 10 A4	10540511	26	134	313	11 24 409 0	PANELLING SUPERSTR. INSTA
WASHER ISO 7093-1 10 A4	10540511	26	89	331	11 24 922 2	COVER UNDERSIDE
WASHER ISO 7093-1 10 A4	10540511	77	125	335	11 24 483 7	MOUNTING PARTS SUPERST
WASHER ISO 7093-1 10 A4	10540511	40	8	402	11 27 970 6	CABIN CPL
WASHER ISO 7093-1 10 A4	10540511	86	16	511	11 23 820 3	PIVOT PIECE CPL
WASHER ISO 7093-1 10 A4	10540511	16	2	545	99 29 588 14	SUPPORT
WASHER ISO 7093-1 10 A4	10540511	15	2	554	11 28 397 7	SUMP PAN CPL
WASHER ISO 7093-1 10 A4	10540511	15	2	555	11 28 397 8	SUMP PAN CPL
WASHER ISO 7093-1 10 A4	10540511	15	4	556	11 28 399 5	SUMP PAN CPL
WASHER ISO 7093-1 10 A4	10540511	15	4	557	11 28 399 7	SUMP PAN CPL
WASHER ISO 7093-1 10 A4	10540511	35	8	581	11 28 629 9	MOUNTING PARTS
WASHER ISO 7093-1 10 A4	10540511	46	2	593	99 48 521 14	TIP BOOM CPL
WASHER ISO 7093-1 10 A4	10540511	44	78	633	10 55 372 1	ROOF RAILING RFK
WASHER ISO 7093-1 10 A4	10540511	17	4	647	10 55 601 0	FALL PROTECTION RFK
WASHER ISO 7093-1 10 A4	10540511	12	2	664	99 35 606 14	MOUNTING LINK CPL
WASHER ISO 7093-1 10 A4	10540511	7	4	666	11 23 619 7	SELF-LOADING SYSTEM RFK
WASHER ISO 7093-1 12 A4	10540512	34	9	77	10 58 163 4	CABIN SUSPENSION CPL
WASHER ISO 7093-1 12 A4	10540512	71	11	335	11 24 483 7	MOUNTING PARTS SUPERST
WASHER ISO 7093-1 12 A4	10540512	14	2	442	99 18 041 14	LASHING SUPERSTRUCTURE
WASHER ISO 7093-1 16	10544173	6	4	68	10 55 268 1	DRIVER INSTALLATION
WASHER ISO 7093-1 16	10544173	74	8	511	11 23 820 3	PIVOT PIECE CPL
WASHER ISO 7093-1 16	10544173	27	4	552	11 28 390 8	BOOM ACCESS
WASHER ISO 7093-1 16	10544173	27	4	568	11 28 583 8	BOOM ACCESS
WASHER ISO 7093-1 16	10544173	27	4	575	11 28 626 1	BOOM ACCESS
WASHER ISO 7093-1 20	10544175	3	1	498	10 57 462 9	PIN CPL
WASHER ISO 7093-1 4 A4	10540497	44	2	725	10 52 155 9	MODULE REFUELLING SYSTE
WASHER ISO 7093-1 5 A4	485570714	23	4	79	10 56 067 3	BATTERY INSTALLATION CPL
WASHER ISO 7093-1 6 A4	10540500	73	6	211	11 24 114 3	EXHAUST GAS SYSTEM
WASHER ISO 7093-1 6 A4	10540500	67	6	335	11 24 483 7	MOUNTING PARTS SUPERST
WASHER ISO 7093-1 6 A4	10540500	27	9	699	10 58 064 7	VIDEO MONITORING SYSTEM
WASHER ISO 7093-1 8	11932237	11	1	203	10 57 423 9	COOLER MOTOR
WASHER ISO 7093-1 8 A4	10540510	71	6	8	11 92 958 8	AIR DUCT CPL
WASHER ISO 7093-1 8 A4	10540510	12	2	75	92 65 477 14	FIRE EXTINGUISHER RFK
WASHER ISO 7093-1 8 A4	10540510	16	4	77	10 58 163 4	CABIN SUSPENSION CPL
WASHER ISO 7093-1 8 A4	10540510	43	13	315	11 24 409 0	PANELLING SUPERSTR. INSTA
WASHER ISO 7093-1 8 A4	10540510	86	34	335	11 24 483 7	MOUNTING PARTS SUPERST
WASHER ISO 7093-1 8 A4	10540510	27	4	361	10 51 968 6	LUG SUPERSTRUCTURE CPL
WASHER ISO 7093-1 8 A4	10540510	12	2	376	99 29 386 14	BRACKET CPL
WASHER ISO 7093-1 8 A4	10540510	12	2	377	99 29 434 14	BRACKET CPL
WASHER ISO 7093-1 8 A4	10540510	79	49	511	11 23 820 3	PIVOT PIECE CPL
WASHER ISO 7093-1 8 A4	10540510	28	5	552	11 28 390 8	BOOM ACCESS
WASHER ISO 7093-1 8 A4	10540510	28	5	568	11 28 583 8	BOOM ACCESS
WASHER ISO 7093-1 8 A4	10540510	28	5	575	11 28 626 1	BOOM ACCESS
WASHER ISO 7093-1 8 A4	10540510	34	4	581	11 28 629 9	MOUNTING PARTS
WASHER ISO 7093-1 8 A4	10540510	15	4	582	11 28 610 5	RETAINING DEVICE CPL
WASHER ISO 7093-1 8 A4	10540510	20	2	647	10 55 601 0	FALL PROTECTION RFK

Description	Item	Pos.	Quantity	Sheet	Assembly	Description
WASHER ISO 7093-1 8 A4	10540510	21	4	659	11 26 901 8	HOLDER CPL
WASHER ISO 7093-1 8 A4	10540510	26	8	666	11 23 619 7	SELF-LOADING SYSTEM RFK
WASHER ISO 7093-1 8 A4	10540510	32	4	699	10 58 064 7	VIDEO MONITORING SYSTEM
WASHER ISO 7093-1 8 A4	10540510	18	2	720	10 52 155 4	REFUELLING SYSTEM RFK
WASHER RD 34/20.4X5 30 CRM	422010414	38	20	94	11 24 773 5	HYDR POWER UNIT
WASHER SET	9885924	39	1	130	98 89 984	REPAIR KIT DRIVING MECHAN
WASHER SET	9885924	39	1	133	98 89 983	REPAIR KIT DRIVING MECHAN
WASHER SET	9885937	29	1	147	10 13 802 6	RK CYL.+CONTROL PLATE+SH
WASHER SPRING DIN 7980 12	4980013	25	16	115	10 11 834 9	DOUBLE V-PUMP
WATER COLLECTING PIPE	10146018	1	1	288	10 14 601 2	MANIFOLD FOR WATER CPL.
WATER DRAIN CPL	10572149	250	1	432	11 93 934 6	AIR CONDITIONING
WATER DRAIN PLUG	602501208	55	1	51	10 56 645 8	TERMINAL BOX
WATER DRAIN VALVE	502921908	10	1	8	11 92 958 8	AIR DUCT CPL
WATER HOSE	11946459	350	1	432	11 93 934 6	AIR CONDITIONING
WATER PUMP WITH FASTENIN	10142734	370	1	224	12 42 545 4	DIESEL ENGINE
WATER PUMP, PRE-ASSEMB	11354498	1	1	283	10 14 273 4	WATER PUMP WITH FASTENIN
WATER SENSOR	10331335	13	1	215	10 30 300 7	FUEL PREFILTER
WATER VALVE	10584671	50	1	432	11 93 934 6	AIR CONDITIONING
WATER VALVE	11082158	12	2	217	11 24 114 5	ASSEMBLY INSTAL.
WATER VALVE	592293114	51	1	432	11 93 934 6	AIR CONDITIONING
WATER VALVE	592293114	51	1	433	10 58 467 1	WATER VALVE
WEDGE LOCK WASHER M10 2	10536579	19	4	510	11 23 820 3	PIVOT PIECE CPL
WEDGE LOCK WASHER M10 2	10536579	16	4	582	11 28 610 5	RETAINING DEVICE CPL
WEDGE LOCK WASHER M10 2	10536580	52	16	640	99 10 116 14	ROPE GUIDE
WEDGE LOCK WASHER M10 2	10536580	11	8	711	10 52 293 0	SG TACHOGENERATOR RFK
WEDGE LOCK WASHER M12 2	10536581	24	8	538	11 24 444 4	A-FRAME 1 CPL
WEDGE LOCK WASHER M12 2	10536581	29	8	590	99 23 398 14	ROLLER SET
WEDGE LOCK WASHER M12 2	10536582	21	13	361	10 51 968 6	LUG SUPERSTRUCTURE CPL
WEDGE LOCK WASHER M12 2	10536582	1	8	370	99 29 258 14	LUG SHEAVE SET
WEDGE LOCK WASHER M16	7024427	30	8	590	99 23 398 14	ROLLER SET
WEDGE LOCK WASHER M16	7623374	31	16	361	10 51 968 6	LUG SUPERSTRUCTURE CPL
WEDGE LOCK WASHER M20	10536600	15	22	361	10 51 968 6	LUG SUPERSTRUCTURE CPL
WEDGE LOCK WASHER M6 2	10536576	20	4	659	11 26 901 8	HOLDER CPL
WEIGHT	388283108	18	1	591	99 30 800 14	HOIST LIMIT SWITCH INSTAL.
WEIGHT	388283208	19	1	591	99 30 800 14	HOIST LIMIT SWITCH INSTAL.
WELD PLATE	969329314	40	1	20	11 29 618 6	SUPERSTRUCTURE HYDR
WELD PLATE	969329314	40	1	715	10 56 173 5	TUBING HYDR
WINCH	10530398	10	1	484	11 26 260 5	WINCH 1 CRANE
WINCH	10530398	10	1	499	11 26 261 0	WINCH 2 CRANE
WINCH	10551563	10	1	361	10 51 968 6	LUG SUPERSTRUCTURE CPL
WINCH	592069414	27	1	618	10 51 743 9	ROPE LUG CPL RFK
WINCH	969624801	10	1	343	10 51 969 7	NEEDLE LUFFING WINCH
WINCH 1 CRANE	11262605	41	1	2	01 38 376 14	LR 1300 SX
WINCH 1 EL	11216342	3	1	484	11 26 260 5	WINCH 1 CRANE
WINCH 1 EL	11216342	3	1	499	11 26 261 0	WINCH 2 CRANE
WINCH 1 HYDR	11262606	2	1	484	11 26 260 5	WINCH 1 CRANE
WINCH 2 CRANE	11262610	45	1	2	01 38 376 14	LR 1300 SX
WINCH 2 HYDR	11262611	2	1	499	11 26 261 0	WINCH 2 CRANE
WINCH FRAME	918678214	29	1	618	10 51 743 9	ROPE LUG CPL RFK
WINCH FRAME	969654301	20	1	349	96 96 248 01	WINCH
WINCH SYNCHRONIZATION E	971460103	651	1	4	01 38 376 14	LR 1300 SX
WINCH TRESTLE	11893215	5	1	489	10 53 039 8	WINCH
WINCHES INSTALLATION	11220500	11	1	484	11 26 260 5	WINCH 1 CRANE
WINCHES INSTALLATION	11220501	11	1	499	11 26 261 0	WINCH 2 CRANE
WIND TRANSMITTER	692815514	31	1	586	97 07 204 03	ANEMOMETER EL RFK
WING SCREW DIN 316 M10X80	485559814	14	2	79	10 56 067 3	BATTERY INSTALLATION CPL
WIPER ARM	592287914	19	1	426	59 22 871 14	FRONT WINDOW CPL
WIPER ARM	592288814	46	1	419	10 35 008 0	CABIN
WIPER BLADE	592288014	20	1	426	59 22 871 14	FRONT WINDOW CPL
WIPER BLADE	592288914	47	1	419	10 35 008 0	CABIN

Description	Item	Pos.	Quantity	Sheet	Assembly	Description
WIPER MOTOR	592287614	16	1	426	59 22 871 14	FRONT WINDOW CPL
WIPER MOTOR	592288714	45	1	419	10 35 008 0	CABIN
WIRED END FERRULE	602307708	100	2	51	10 56 645 8	TERMINAL BOX
WIRING HARNESS	10226573	3	1	343	10 51 969 7	NEEDLE LUFFING WINCH
WIRING HARNESS	10226573	91	1	517	11 90 151 1	CABLE LOOM 1 PIVOT PIECE E
WIRING HARNESS	10226574	3	1	618	10 51 743 9	ROPE LUG CPL RFK
WIRING HARNESS	10519084	203	1	404	11 27 973 6	CABIN EL
WIRING HARNESS	10540846	98	1	404	11 27 973 6	CABIN EL
WIRING HARNESS	11239085	11	1	52	11 23 908 2	CONTROL CONSOLE
WIRING HARNESS	11259039	206	1	404	11 27 973 6	CABIN EL
WIRING HARNESS	11265111	11	1	518	91 92 528 14	CABLE DRUM
WIRING HARNESS	11912031	205	1	404	11 27 973 6	CABIN EL
WIRING HARNESS ASSEMBLY	10150287	2	1	305	10 15 028 8	CABLE HARNESS MOUNTING
WIRING HARNESS ASSEMBLY	11425228	8	1	305	10 15 028 8	CABLE HARNESS MOUNTING
WORK LIGHT	10224500	100	4	46	11 24 519 0	SUPERSTRUCTURE EL
WORK LIGHT	7027205	60	2	46	11 24 519 0	SUPERSTRUCTURE EL
WORK LIGHT	7027205	50	3	403	11 27 973 6	CABIN EL
WORK LIGHT	7027205	37	1	695	10 53 246 1	CAMERA MONITORING
WORK LIGHT	7027205	32	1	697	10 50 775 0	CAMERA MONITORING
WP	10223446	19	1	321	10 57 883 5	DOOR
WP	10223447	3	1	321	10 57 883 5	DOOR
WP	10223448	11	1	321	10 57 883 5	DOOR
WP	10223449	16	1	321	10 57 883 5	DOOR
WP	10336682	4	1	313	11 24 409 0	PANELLING SUPERSTR. INSTA
WP	10351547	7	7	317	11 24 409 1	COVERS
WP	10351548	8	1	317	11 24 409 1	COVERS
WP	10537566	3	1	439	10 53 756 0	LAMP HOLDER CPL
WP	10557223	13	2	647	10 55 601 0	FALL PROTECTION RFK
WP	10572706	2	2	68	10 55 268 1	DRIVER INSTALLATION
WP	10573951	10	1	711	10 52 293 0	SG TACHOGENERATOR RFK
WP	10574631	2	1	498	10 57 462 9	PIN CPL
WP	10575306	4	1	195	11 24 114 0	COOLER INSTALLATION WATE
WP	10575307	5	1	195	11 24 114 0	COOLER INSTALLATION WATE
WP	10575566	10	1	202	11 24 114 1	COOLER INSTALLATION CHA
WP	10575567	11	1	202	11 24 114 1	COOLER INSTALLATION CHA
WP	10577229	40	1	217	11 24 114 5	ASSEMBLY INSTAL.
WP	10586253	50	1	77	10 58 163 4	CABIN SUSPENSION CPL
WP	10599571	46	1	333	11 24 483 7	MOUNTING PARTS SUPERST
WP	10599757	6	1	195	11 24 114 0	COOLER INSTALLATION WATE
WP	10599758	7	1	195	11 24 114 0	COOLER INSTALLATION WATE
WP	10599759	8	1	195	11 24 114 0	COOLER INSTALLATION WATE
WP	10599854	49	1	333	11 24 483 7	MOUNTING PARTS SUPERST
WP	11223086	1	1	614	11 22 322 6	MODEM CPL RFK
WP	11245760	4	4	636	11 24 575 5	PEDESTAL
WP	11248432	10	1	211	11 24 114 3	EXHAUST GAS SYSTEM
WP	11248433	11	1	211	11 24 114 3	EXHAUST GAS SYSTEM
WP	11250985	3	1	205	11 28 574 7	WP
WP	11261002	5	2	193	11 24 113 9	ADD-ON PARTS DIESEL ENGIN
WP	11268967	10	1	659	11 26 901 8	HOLDER CPL
WP	11279013	43	1	217	11 24 114 5	ASSEMBLY INSTAL.
WP	11285709	4	1	205	11 28 574 7	WP
WP	11285747	3	1	202	11 24 114 1	COOLER INSTALLATION CHA
WP	11309628	2	1	440	11 30 962 5	HOLDER CPL
WP	11900503	9	1	711	10 52 293 0	SG TACHOGENERATOR RFK
WP	11929423	20	1	8	11 92 958 8	AIR DUCT CPL
WP	11929596	21	1	8	11 92 958 8	AIR DUCT CPL
WP	11930281	22	1	8	11 92 958 8	AIR DUCT CPL
WP	11930759	23	1	8	11 92 958 8	AIR DUCT CPL
WP	11931909	24	1	8	11 92 958 8	AIR DUCT CPL
WP	289059414	13	1	443	11 89 364 8	UC CPL

Description	Item	Pos.	Quantity	Sheet	Assembly	Description
WP	385031714	15	2	618	10 51 743 9	ROPE LUG CPL RFK
WP	949892214	20	1	361	10 51 968 6	LUG SUPERSTRUCTURE CPL
WP	954373603	31	2	467	11 89 365 0	CRAWLER CARRIER RIGHT CP
WP	954373603	31	2	478	11 89 365 1	CRAWLER CARRIER LEFT CP
WP	956033214	3	2	582	11 28 610 5	RETAINING DEVICE CPL
WP	956067414	5	2	593	99 48 521 14	TIP BOOM CPL
WP	956266614	1	1	540	91 90 584 14	ANGLE INDICATION
WP	956266714	2	1	540	91 90 584 14	ANGLE INDICATION
WP	956319314	30	4	593	99 48 521 14	TIP BOOM CPL
WP	956810314	26	1	590	99 23 398 14	ROLLER SET
WP	959332514	90	1	511	11 23 820 3	PIVOT PIECE CPL
WP	970831503	14	2	510	11 23 820 3	PIVOT PIECE CPL
WP	970854303	16	2	581	11 28 629 9	MOUNTING PARTS
WP	971323803	28	1	640	99 10 116 14	ROPE GUIDE
WP	971508203	11	1	593	99 48 521 14	TIP BOOM CPL
WRENCH SOCKET 36 X 1 "	885380314	55	1	504	10 56 187 5	TOOL EQUIPMENT

Bezeichnung	Artikel	Pos.	Menge	Blatt	Baugruppe	Bezeichnung
A-BOCK 1 KPL	11244444	10	1	536	11 23 937 8	A-BOCK 1 MONTAGEEINHEIT
A-BOCK 1 MONTAGEEINHEIT	11239378	63	1	2	01 38 376 14	LR 1300 SX
A-BOCK AUFRICHTZYL EINBA	10519694	51	1	18	11 24 047 9	OW KPL
A-BOCK AUFRICHTZYL HYDR	10519695	2	1	83	10 51 969 4	A-BOCK AUFRICHTZYL EINBA
A-BOCK EL	10531207	3	1	538	11 24 444 4	A-BOCK 1 KPL
ABDECKBLECH	11213818	14	2	608	79 05 205 14	UNTERFLASCHE
ABDECKBLECH	927509601	14	1	396	90 01 376 2	DREHWERKANTRIEB
ABDECKKAPPE	10036950	17	1	435	70 24 996	SITZRAHMEN
ABDECKKAPPE	10129382	7	1	264	10 13 508 0	DRUCKROHRSTUTZEN
ABDECKKAPPE	10129385	10	1	264	10 13 508 0	DRUCKROHRSTUTZEN
ABDECKKAPPE	11946452	220	1	432	11 93 934 6	KLIMAANLAGE
ABDECKUNG	10530487	7	1	47	10 53 048 9	SICHERUNGSHALTER
ABDECKUNG	10583346	10	1	311	11 24 114 6	ABDECKUNG
ABDECKUNG	10583347	11	1	311	11 24 114 6	ABDECKUNG
ABDECKUNG	11236709	3	1	706	11 21 750 0	VERFLUESSIGER
ABDECKUNG	11241146	90	1	92	11 24 048 0	ZENTRALAGGREGAT
ABDECKUNG	11252203	1	1	311	11 24 114 6	ABDECKUNG
ABDECKUNG	11252205	16	1	311	11 24 114 6	ABDECKUNG
ABDECKUNG	11252206	17	1	311	11 24 114 6	ABDECKUNG
ABDECKUNG	11252207	2	1	311	11 24 114 6	ABDECKUNG
ABDECKUNG	11252208	8	1	311	11 24 114 6	ABDECKUNG
ABDECKUNG	11252211	3	1	311	11 24 114 6	ABDECKUNG
ABDECKUNG	11252213	9	1	311	11 24 114 6	ABDECKUNG
ABDECKUNG	11252214	4	1	311	11 24 114 6	ABDECKUNG
ABDECKUNG	11252215	5	1	311	11 24 114 6	ABDECKUNG
ABDECKUNG	11252216	6	1	311	11 24 114 6	ABDECKUNG
ABDECKUNG	11262861	12	1	311	11 24 114 6	ABDECKUNG
ABDECKUNG	11357451	1	1	282	11 44 013 4	ABDECKUNG VORM.
ABDECKUNG	11357453	2	1	282	11 44 013 4	ABDECKUNG VORM.
ABDECKUNG	592287814	18	1	426	59 22 871 14	FRONTSCHEIBE KPL
ABDECKUNG ANBAU	10146117	342	1	224	12 42 545 4	DIESELMOTOR
ABDECKUNG UNTERSEITE	11249222	12	1	90	11 26 560 6	AGGREGAT DIESELMOTOR
ABDECKUNG VORM.	11440134	1	1	281	10 14 611 7	ABDECKUNG ANBAU
ABGASANLAGE	11241143	40	1	92	11 24 048 0	ZENTRALAGGREGAT
ABGASANLAGE	11900325	70	1	92	11 24 048 0	ZENTRALAGGREGAT
ABGASENDROHR	11248175	7	1	211	11 24 114 3	ABGASANLAGE
ABGASKLAPPE	10153118	1	1	293	10 14 511 2	ABGASSTUTZEN ANBAU
ABGASKRUEMMER	10141440	1	1	290	10 14 144 3	ABGASROHR VORM.
ABGASKRUEMMER	10141442	2	2	290	10 14 144 3	ABGASROHR VORM.
ABGASMISCHROHR	10148669	4	1	308	11 90 032 5	ABGASANLAGE
ABGASROHR ANBAU	10141444	410	1	224	12 42 545 4	DIESELMOTOR
ABGASROHR KPL	11248166	6	1	211	11 24 114 3	ABGASANLAGE
ABGASROHR VORM.	10141443	1	1	289	10 14 144 4	ABGASROHR ANBAU
ABGASSTUTZEN	10146274	3	1	293	10 14 511 2	ABGASSTUTZEN ANBAU
ABGASSTUTZEN ANBAU	10145112	432	1	224	12 42 545 4	DIESELMOTOR
ABLASSHAHN	11696074	16	1	215	10 30 300 7	KRAFTSTOFFVORFILTER
ABLASSSCHLAUCH KPL	917665814	31	1	504	10 56 187 5	WERKZEUGAUSRUESTUNG
ABLASSSTUTZEN	7402657	1	1	507	91 76 658 14	ABLASSSCHLAUCH KPL
ABSAUGPUMPE MIT BEFEST.	10133947	141	1	223	12 42 545 4	DIESELMOTOR
ABSAUGPUMPE VORM.	10133823	1	1	255	10 13 394 7	ABSAUGPUMPE MIT BEFEST.
ABSCHALTVENTIL	11067304	5	1	104	11 21 991 0	PUMPENGEHAEUSE
ABSCHLUSSPLATTE	602730714	25	3	51	10 56 645 8	KLEMMKASTEN
ABSCHLUSSPLATTE	602812714	26	1	51	10 56 645 8	KLEMMKASTEN
ABSCHLUSSPLATTE	602812714	87	1	406	10 55 963 5	SCHALTSCHR X1
ABSCHLUSSPLATTE	693182314	78	2	406	10 55 963 5	SCHALTSCHR X1
ABSPERRORGAN	10526733	11	1	60	10 56 070 1	TANK HYDR KPL
ABSPERRORGAN	790319114	3	1	718	11 31 446 3	LADELUFTROHR KPL
ABSTREIFER	10352319	60	1	685	59 21 826 14	ABSTUETZZYLINDER
ABSTREIFER	592031814	9	1	703	59 20 008 14	DOPPELWIRKZYL
ABSTREIFER	749073614	90	1	685	59 21 826 14	ABSTUETZZYLINDER

Bezeichnung	Artikel	Pos.	Menge	Blatt	Baugruppe	Bezeichnung
ABSTREIFRING	726054214	13	1	460	51 33 141 14	DOPPELWIRKZYL
ABSTREIFRING	726054414	9	1	39	51 33 139 14	DOPPELWIRKZYL
ABSTREIFRING	790354014	9	1	716	51 03 361 14	EINFACHWIRKZYL
ABSTUETZPLATTE KPL	990759714	10	4	687	11 89 568 8	SELBSTVERLADESYSTEM NR
ABSTUETZUNG	919014814	23	1	640	99 10 116 14	SEILFUEHRUNG
ABSTUETZUNG	919017314	24	1	640	99 10 116 14	SEILFUEHRUNG
ABSTUETZZYLINDER	592182614	1	4	684	11 23 524 8	VERROHRUNG HYDR
ABSTURZSICHERUNG KPL	10556011	10	1	647	10 55 601 0	STURZSICHERUNG NRS
ABTRIEB KPL	540270414	23	1	624	59 20 694 14	WINDE
ABTRIEBSFLANSCH		10	1	352	93 88 497 01	PLANETENGETRIEBE
ABTRIEBSWELLE	938585201	10	1	396	90 01 376 2	DREHWERKANTRIEB
ABTRIEBSWELLENGEHAEUSE	927562201	1	1	396	90 01 376 2	DREHWERKANTRIEB
ACHSE	11310955	13	2	552	11 28 390 8	AL BEGEHUNG
ACHSE	11310955	13	2	568	11 28 583 8	AL BEGEHUNG
ACHSE	11310955	13	2	575	11 28 626 1	AL BEGEHUNG
ACHSE	918539614	17	1	361	10 51 968 6	EZW OW EINBAU KPL
ACHSE KPL	991413814	1	1	541	99 14 137 14	UMLENKROLLE KPL
ACHSE SCHWK	970901603	14	2	640	99 10 116 14	SEILFUEHRUNG
ACHSHALTER	703003014	28	1	510	11 23 820 3	ANLENKSTUECK KPL
ACHSHALTER	703003014	6	2	582	11 28 610 5	ARRETIERUNG KPL
ACHSHALTER	954372503	14	4	480	11 31 390 8	MITTELTEIL KPL
ACHSHALTER	956378214	27	2	510	11 23 820 3	ANLENKSTUECK KPL
ACHSHALTER	997040201	25	1	357	96 96 543 01	WINDENRAHMEN
ADAPTER	10121091	1	1	121	90 74 418	REGELVENTIL
ADAPTER	11221276	5	1	167	11 22 126 8	PUMPENELEMENT
ADAPTER	570950308	1	1	172	70 19 834	ADAPTER
ADAPTER	7019834	4	1	167	11 22 126 8	PUMPENELEMENT
ADAPTER 5X84X90 PA 6	10549545	53	1	402	11 27 970 6	KABINE KPL
ADAPTERBLECH	11220468	5	1	704	11 22 037 2	FUSSPEDAL EL EINBAU
ADAPTERBLECH	11223693	5	2	418	11 22 369 1	FUSSPEDAL EL EINBAU
ADAPTERBLECH	959571914	14	2	660	10 51 971 3	SELBSTVERLADESYSTEM NR
ADAPTERRAHMEN	10599215	32	1	408	10 51 907 9	STEUERSTAND LI
ADERENDHUELSE	602307708	100	2	51	10 56 645 8	KLEMMKASTEN
AGGREGAT DIESELMOTOR	11265606	6	1	2	01 38 376 14	LR 1300 SX
AGGREGAT HYDR	11247735	2	1	92	11 24 048 0	ZENTRALAGGREGAT
AGGREGATETRAEGER ANBA	10147686	12	1	223	12 42 545 4	DIESELMOTOR
AGGREGATETRAEGER VORM	10148254	1	1	228	10 14 768 6	AGGREGATETRAEGER ANBA
AL BEGEHUNG	11283908	14	1	549	11 24 570 3	AL ZWISCHENSTUECK KPL
AL BEGEHUNG	11285838	14	1	567	11 24 570 9	AL ZWISCHENSTUECK KPL
AL BEGEHUNG	11286261	14	1	574	11 24 571 5	AL ZWISCHENSTUECK KPL
AL KOPF EL	10531413	3	1	578	11 24 132 4	AL KOPF KPL
AL KOPF KPL	11241324	81	1	3	01 38 376 14	LR 1300 SX
AL KOPF SCHWK KPL	11241323	10	1	578	11 24 132 4	AL KOPF KPL
AL ZWISCHENSTUECK KPL	11245703	10	1	548	11 93 749 9	MONTAGEEINHEIT
AL ZWISCHENSTUECK KPL	11245709	10	1	566	11 93 750 1	MONTAGEEINHEIT
AL ZWISCHENSTUECK KPL	11245715	10	1	573	11 93 750 4	MONTAGEEINHEIT
AL ZWISCHENSTUECK SCHW	11245698	10	1	549	11 24 570 3	AL ZWISCHENSTUECK KPL
AL ZWISCHENSTUECK SCHW	11245700	10	1	567	11 24 570 9	AL ZWISCHENSTUECK KPL
AL ZWISCHENSTUECK SCHW	11245702	10	1	574	11 24 571 5	AL ZWISCHENSTUECK KPL
ANBAUFLANSCH	11250972	30	1	98	11 24 682 0	VERTEILERGETRIEBE
ANBAUFLANSCH	11250974	70	3	98	11 24 682 0	VERTEILERGETRIEBE
ANBAUFLANSCH	11290845	80	1	98	11 24 682 0	VERTEILERGETRIEBE
ANBAUFLANSCH	790403714	40	1	98	11 24 682 0	VERTEILERGETRIEBE
ANBAUGEHAEUSE	10195680	31	1	51	10 56 645 8	KLEMMKASTEN
ANBAUGEHAEUSE	605613701	41	1	51	10 56 645 8	KLEMMKASTEN
ANBAUGEHAEUSE	693149814	45	1	51	10 56 645 8	KLEMMKASTEN
ANBAUSATZ DURCHTRIEB	10132357	302	1	139	10 12 878 7	V.PUMPE
ANBAUTEILE DIESELMOTOR	11241139	20	1	92	11 24 048 0	ZENTRALAGGREGAT
ANBAUTEILE LUFTPRESSER	11414757	4	1	11	11 92 891 3	KOMPRESSOR NRS
ANHAENGEKETTE	990835714	40	1	467	11 89 365 0	RAUPENTRAEGER RE KPL

Bezeichnung	Artikel	Pos.	Menge	Blatt	Baugruppe	Bezeichnung
ANHAENGEKETTE	990835714	40	1	478	11 89 365 1	RAUPENTRAEGER LI KPL
ANLAGE HARNSTOFF EINBAU	11241145	60	1	92	11 24 048 0	ZENTRALAGGREGAT
ANLAUFSCHEIBE		46	1	352	93 88 497 01	PLANETENGETRIEBE
ANLENKBOLZEN EINBAU	992345114	50	1	18	11 24 047 9	OW KPL
ANLENKSTUECK EL	11901509	3	1	508	11 23 820 3	ANLENKSTUECK KPL
ANLENKSTUECK HYDR	10518261	2	1	508	11 23 820 3	ANLENKSTUECK KPL
ANLENKSTUECK KPL	11238203	59	1	2	01 38 376 14	LR 1300 SX
ANLENKSTUECK SCHWK	11238202	10	1	508	11 23 820 3	ANLENKSTUECK KPL
ANSAUGANLAGE LUFT	11241142	30	1	92	11 24 048 0	ZENTRALAGGREGAT
ANSAUGKLAPPEN NRS	11314462	854	1	4	01 38 376 14	LR 1300 SX
ANSAUGROHR	953466003	10	1	192	10 58 017 0	RUECKLAUFROHR
ANSAUGROHR KPL	10350932	9	1	191	10 57 532 2	ANSAUGROHR OEL KPL
ANSAUGROHR KPL	10579155	11	2	191	10 57 532 2	ANSAUGROHR OEL KPL
ANSAUGROHR KPL	10598537	8	1	191	10 57 532 2	ANSAUGROHR OEL KPL
ANSAUGROHR KPL	592070414	7	1	191	10 57 532 2	ANSAUGROHR OEL KPL
ANSAUGROHR KPL	592330814	14	1	191	10 57 532 2	ANSAUGROHR OEL KPL
ANSAUGROHR KPL	916526414	13	1	191	10 57 532 2	ANSAUGROHR OEL KPL
ANSAUGROHR LUFT	11247162	11	1	207	11 24 114 2	ANSAUGANLAGE LUFT
ANSAUGROHR LUFT	11252578	15	1	311	11 24 114 6	ABDECKUNG
ANSAUGROHR LUFT	11929287	21	1	5	11 93 045 7	UMBAUSATZ NRS
ANSAUGROHR OEL	10519481	15	1	92	11 24 048 0	ZENTRALAGGREGAT
ANSAUGROHR OEL KPL	10575322	3	1	189	10 51 948 1	ANSAUGROHR OEL
ANSAUGROHR OEL SCHWK	10575323	3	1	191	10 57 532 2	ANSAUGROHR OEL KPL
ANSAUGSTUTZEN	11444998	1	1	274	10 14 736 9	ANSAUGSTUTZEN ANBAU
ANSAUGSTUTZEN ANBAU	10147369	221	1	224	12 42 545 4	DIESELMOTOR
ANSCHLAG	10539631	45	2	467	11 89 365 0	RAUPENTRAEGER RE KPL
ANSCHLAG	10539631	45	2	478	11 89 365 1	RAUPENTRAEGER LI KPL
ANSCHLAG	10566932	14	2	650	11 29 473 7	LAUFSTEG ZWISCHENSTUEC
ANSCHLAG	10566932	15	2	654	11 29 474 2	LAUFSTEG ZWISCHENSTUEC
ANSCHLAG	10566932	17	2	655	11 29 474 3	LAUFSTEG ZWISCHENSTUEC
ANSCHLAG	10566932	14	2	657	10 55 514 8	STURZSICHERUNG NRS
ANSCHLAG	11913115	2	1	110	11 06 730 5	WECHSELVENTIL
ANSCHLAG	990443514	8	2	321	10 57 883 5	TUER
ANSCHLAG	990443514	8	2	323	10 57 897 6	TUER
ANSCHLAG	990443514	3	2	325	10 57 940 0	TUER
ANSCHLAG	990443514	3	2	326	10 56 623 7	TUER
ANSCHLAG	990443514	8	2	327	10 56 580 8	TUER
ANSCHLAGPLATTE	958908914	17	1	521	10 58 193 7	GITTERROST KPL
ANSCHLAGPUFFER	592291314	108	1	420	10 35 008 0	KABINE
ANSCHLAGSCHRAUBE M12X3	9885661	17	2	117	10 11 835 0	ANSCHLUSSGEHAEUSE
ANSCHLUSSFLANSCH	10132074	3	1	256	10 13 382 3	ABSAUGPUMPE VORM.
ANSCHLUSSFLANSCH	9268423	13	1	115	10 11 834 9	DOPPELV.PUMPE
ANSCHLUSSFLANSCH	9276385	11	1	115	10 11 834 9	DOPPELV.PUMPE
ANSCHLUSSGEHAEUSE	10118350	3	1	115	10 11 834 9	DOPPELV.PUMPE
ANSCHLUSSPLATTE	11940146	4	1	388	51 22 991 14	OELMOTOR
ANSCHLUSSPLATTE	510427914	5	1	528	10 51 959 1	VERROHRUNG HYDR
ANSCHLUSSPLATTE	510662614	12	2	20	11 29 618 6	OW HYDR
ANSCHLUSSPLATTE	510662914	23	3	20	11 29 618 6	OW HYDR
ANSCHLUSSPLATTE	510662914	5	1	345	10 51 969 8	NADELEINZIEHWINDE HYDR
ANSCHLUSSPLATTE	510662914	5	1	362	10 51 968 7	HAUPT EZW HYDR
ANSCHLUSSPLATTE	510662914	20	1	715	10 56 173 5	VERROHRUNG HYDR
ANSCHLUSSPLATTE	511455014	3	1	620	10 51 726 2	VERROHRUNG HYDR
ANSCHLUSSPLATTE VORM.	10141316	1	1	152	10 14 131 7	RS ANSCHLUSSPLATTE
ANSCHLUSSSCHILD	938858501	5	1	357	96 96 543 01	WINDENRAHMEN
ANSCHLUSSSCHILD	969655301	1	1	357	96 96 543 01	WINDENRAHMEN
ANSCHLUSSSTUECK	10139391	6	1	232	10 14 201 8	KURBELGEHAEUSEENTLUEF
ANSCHLUSSSTUECK	10139393	5	1	232	10 14 201 8	KURBELGEHAEUSEENTLUEF
ANSCHLUSSSTUECK	7024968	224	1	30	11 28 647 6	VENTILBLOCK
ANSCHLUSSSTUECK VORM.	10141790	217	1	224	12 42 545 4	DIESELMOTOR
ANSCHLUSSSTUTZEN	10128100	4	1	264	10 13 508 0	DRUCKROHRSTUTZEN

Bezeichnung	Artikel	Pos.	Menge	Blatt	Baugruppe	Bezeichnung
ANSCHLUSSSTUTZEN	927586201	12	1	356	93 36 755 01	OELMESSEINRICHTUNG
ANSCHLUSSSTUTZEN	927586201	27	1	356	93 36 755 01	OELMESSEINRICHTUNG
ANSCHLUSSTEILE	11280482	10	2	70	11 27 315 5	ZENTRALSCHMIERUNG
ANSCHLUSSTRAEGER		1	1	352	93 88 497 01	PLANETENGETRIEBE
ANSCHWEISSPLATTE	969329314	40	1	20	11 29 618 6	OW HYDR
ANSCHWEISSPLATTE	969329314	40	1	715	10 56 173 5	VERROHRUNG HYDR
ANSTEUERGERAET	11219934	1	1	113	11 21 991 7	STEUERGERAET
ANTENNE	11645490	76	1	403	11 27 973 6	KABINE EL
ANTIRUTSCHBELAG	11258244	990	1	18	11 24 047 9	OW KPL
ANTRIEB	11893214	4	1	489	10 53 039 8	WINDE
ANTRIEB	990464514	10	1	378	99 04 941 14	ANTRIEBSEINHEIT
ANTRIEB KPL	540270514	24	1	624	59 20 694 14	WINDE
ANTRIEBSEINHEIT	990494114	2	1	359	10 51 969 1	EZW OW EINBAU KPL
ANTRIEBSFLANSCH	606279014	20	1	497	11 22 050 0	WINDEN EINBAU
ANTRIEBSFLANSCH	606279014	20	1	503	11 22 050 1	WINDEN EINBAU
ANTRIEBSFLANSCH	606281114	46	1	45	11 24 519 0	OW EL
ANTRIEBSHUELSE	11223233	4	1	380	99 04 645 14	ANTRIEB
ANTRIEBSHUELSE	540272914	4	1	629	54 02 705 14	ANTRIEB KPL
ANTRIEBSWELLE		5	1	352	93 88 497 01	PLANETENGETRIEBE
ANTRIEBSWELLE	944434903	50	1	471	96 93 178 01	FAHRANTRIEB
ARBEITSSCHEINWERFER	10224500	100	4	46	11 24 519 0	OW EL
ARBEITSSCHEINWERFER	7027205	60	2	46	11 24 519 0	OW EL
ARBEITSSCHEINWERFER	7027205	50	3	403	11 27 973 6	KABINE EL
ARBEITSSCHEINWERFER	7027205	37	1	695	10 53 246 1	KAMERAUEBERWACHUNG
ARBEITSSCHEINWERFER	7027205	32	1	697	10 50 775 0	KAMERAUEBERWACHUNG
ARMLEHNE LINKS	7024982	90	1	434	10 22 506 8	FAHRERSITZ
ARMLEHNE RE	7024983	91	1	434	10 22 506 8	FAHRERSITZ
ARRETIERUNG	10227128	7	1	519	61 61 541 14	KABELTROMMEL
ARRETIERUNG	919617914	1	2	582	11 28 610 5	ARRETIERUNG KPL
ARRETIERUNG KPL	11286105	12	1	578	11 24 132 4	AL KOPF KPL
ATL-ANBAU	10140136	430	1	224	12 42 545 4	DIESELMOTOR
AUFFANGWANNE KPL	11283977	15	1	549	11 24 570 3	AL ZWISCHENSTUECK KPL
AUFFANGWANNE KPL	11283977	15	1	567	11 24 570 9	AL ZWISCHENSTUECK KPL
AUFFANGWANNE KPL	11283977	15	1	574	11 24 571 5	AL ZWISCHENSTUECK KPL
AUFFANGWANNE KPL	11283978	16	1	549	11 24 570 3	AL ZWISCHENSTUECK KPL
AUFFANGWANNE KPL	11283978	16	1	567	11 24 570 9	AL ZWISCHENSTUECK KPL
AUFFANGWANNE KPL	11283978	16	1	574	11 24 571 5	AL ZWISCHENSTUECK KPL
AUFFANGWANNE KPL	11283995	17	1	549	11 24 570 3	AL ZWISCHENSTUECK KPL
AUFFANGWANNE KPL	11283995	17	1	567	11 24 570 9	AL ZWISCHENSTUECK KPL
AUFFANGWANNE KPL	11283995	17	1	574	11 24 571 5	AL ZWISCHENSTUECK KPL
AUFFANGWANNE KPL	11283997	18	1	549	11 24 570 3	AL ZWISCHENSTUECK KPL
AUFFANGWANNE KPL	11283997	18	1	567	11 24 570 9	AL ZWISCHENSTUECK KPL
AUFFANGWANNE KPL	11283997	18	1	574	11 24 571 5	AL ZWISCHENSTUECK KPL
AUFHAENGUNG	11274638	21	1	601	79 04 112 14	UNTERFLASCHE
AUFHAENGUNG	11274801	22	1	608	79 05 205 14	UNTERFLASCHE
AUFKLEBER	10541838	32	1	613	11 90 722 6	MODEM NRS
AUFKLEBER SCHALLEISTUN	9874345	12	1	18	11 24 047 9	OW KPL
AUFLAGE	11219265	10	2	543	11 23 749 8	AUFLAGE KPL
AUFLAGE	11219265	10	2	562	11 23 290 7	AUFLAGE KPL
AUFLAGE	11219265	11	2	563	11 23 292 2	AUFLAGE KPL
AUFLAGE	11219265	10	2	597	11 25 204 2	AUFLAGE KPL
AUFLAGE	11260806	44	2	593	99 48 521 14	SPITZEN AL KPL
AUFLAGE	289035314	10	1	545	99 29 588 14	AUFLAGE
AUFLAGE	992958814	10	4	544	11 28 594 7	AUFLAGE KPL
AUFLAGE	992958814	10	6	564	11 28 619 1	AUFLAGE KPL
AUFLAGE	992958814	10	6	571	11 28 653 4	AUFLAGE KPL
AUFLAGE KPL	11232907	14	8	548	11 93 749 9	MONTAGEEINHEIT
AUFLAGE KPL	11232907	14	8	566	11 93 750 1	MONTAGEEINHEIT
AUFLAGE KPL	11232907	14	16	573	11 93 750 4	MONTAGEEINHEIT
AUFLAGE KPL	11232907	15	2	578	11 24 132 4	AL KOPF KPL

Bezeichnung	Artikel	Pos.	Menge	Blatt	Baugruppe	Bezeichnung
AUFLAGE KPL	11232922	15	4	548	11 93 749 9	MONTAGEEINHEIT
AUFLAGE KPL	11232922	15	4	566	11 93 750 1	MONTAGEEINHEIT
AUFLAGE KPL	11232922	15	4	573	11 93 750 4	MONTAGEEINHEIT
AUFLAGE KPL	11232922	16	4	578	11 24 132 4	AL KOPF KPL
AUFLAGE KPL	11237498	13	4	536	11 23 937 8	A-BOCK 1 MONTAGEEINHEIT
AUFLAGE KPL	11252042	51	2	593	99 48 521 14	SPITZEN AL KPL
AUFLAGE KPL	11285947	65	1	2	01 38 376 14	LR 1300 SX
AUFLAGE KPL	11286191	69	1	2	01 38 376 14	LR 1300 SX
AUFLAGE KPL	11286534	77	4	2	01 38 376 14	LR 1300 SX
AUFLAGE KPL	991606114	63	1	18	11 24 047 9	OW KPL
AUFLAGE KPL	991873614	43	4	538	11 24 444 4	A-BOCK 1 KPL
AUFLAGEBLECH	10349598	81	2	511	11 23 820 3	ANLENKSTUECK KPL
AUFLAGEBLECH	10349598	10	1	555	11 28 397 8	AUFFANGWANNE KPL
AUFLAGEBLECH	10349598	10	1	557	11 28 399 7	AUFFANGWANNE KPL
AUFLAGEBLECH	10349599	82	2	511	11 23 820 3	ANLENKSTUECK KPL
AUFLAGEBLECH	10349599	10	1	554	11 28 397 7	AUFFANGWANNE KPL
AUFLAGEBLECH	10349599	10	1	556	11 28 399 5	AUFFANGWANNE KPL
AUFLAGEPLATTE	10098143	1	2	89	99 16 061 14	AUFLAGE KPL
AUFSTIEG KPL	10501795	32	6	467	11 89 365 0	RAUPENTRAEGER RE KPL
AUFSTIEG KPL	10501795	32	6	478	11 89 365 1	RAUPENTRAEGER LI KPL
AUFSTIEGSLEITER KPL NRS	11237407	583	1	3	01 38 376 14	LR 1300 SX
AUSGANGSMODUL	11403695	20	1	309	11 40 371 1	SCR KPL.
AUSGLEICHSBEHAELTER	11287347	11	1	195	11 24 114 0	KUEHLER EINBAU WASSER
AUSPUFFKLAPPE	11299163	13	1	211	11 24 114 3	ABGASANLAGE
AUSSENLAMELLE	501540414	97	8	380	99 04 645 14	ANTRIEB
AUSSENLAMELLE	503192801	8	10	355	93 95 895 01	BREMSLAMELLENSATZ
AUSSENLAMELLE	503199301	5	9	397	50 20 383 01	LAMELLENBREMSE
AUSSENLAMELLE	503199301	4	9	399	93 93 478 01	BREMSLAMELLENSATZ
AUSSENSPIEGEL	779002114	43	1	402	11 27 970 6	KABINE KPL
AUTORADIO	11699714	280	1	336	10 59 256 9	RADIO NRS
AXIALSCHEIBE	540270814	15	6	625	54 02 701 14	PLANETENSTUFE
BACK-UP-ALARM	10288438	52	1	45	11 24 519 0	OW EL
BACKRING	10352355	110	1	685	59 21 826 14	ABSTUETZZYLINDER
BACKRING	10352359	130	4	685	59 21 826 14	ABSTUETZZYLINDER
BALLASTGEWICHT ANORD	992338614	18	1	2	01 38 376 14	LR 1300 SX
BALLASTIERGEHAENGE	797027814	23	1	666	11 23 619 7	SELBSTVERLADESYSTEM NR
BATTERIE	10664204	31	2	45	11 24 519 0	OW EL
BATTERIE EINBAU KPL	10560673	45	1	18	11 24 047 9	OW KPL
BATTERIEABDECKUNG	10560674	1	1	79	10 56 067 3	BATTERIE EINBAU KPL
BATTERIEHAUPTSCHALTER	606070908	35	1	45	11 24 519 0	OW EL
BATTERIEKLEMME	10224316	33	1	45	11 24 519 0	OW EL
BATTERIEKLEMME	10224316	3	1	47	10 53 048 9	SICHERUNGSHALTER
BATTERIEKLEMME	10547876	32	2	45	11 24 519 0	OW EL
BE-UND ENTLUEFTUNGSFILTE	721108801	7	1	356	93 36 755 01	OELMESSEINRICHTUNG
BECKENGURT	7371746	80	1	434	10 22 506 8	FAHRERSITZ
BEDIENELEMENT	592291914	123	1	420	10 35 008 0	KABINE
BEDIENFELD	612436814	11	1	410	10 03 610 7	TASTATUR BEDIENPULT X11
BEF BAND	501507214	14	1	626	54 02 702 14	SEILTROMMEL KPL
BEF BUEGEL	11219861	10	1	563	11 23 292 2	AUFLAGE KPL
BEF SCHELLE	10350978	32	1	94	11 24 773 5	AGGREGAT HYDR
BEF SCHRAUBE	602134114	59	4	51	10 56 645 8	KLEMMKASTEN
BEF SOCKEL	11230237	44	9	538	11 24 444 4	A-BOCK 1 KPL
BEF-TEILE OW	11244837	14	1	90	11 26 560 6	AGGREGAT DIESELMOTOR
BEFESTIGUNG DRUCKROHR	10135434	193	6	223	12 42 545 4	DIESELMOTOR
BEFESTIGUNG INJEKTOR	10135432	192	6	223	12 42 545 4	DIESELMOTOR
BEFESTIGUNGSBLECH	10149477	2	1	295	10 14 584 5	GENERATOR VORM.
BEFESTIGUNGSBUEGEL	10578343	33	1	77	10 58 163 4	KABINENAUFHAENGUNG KPL
BEFESTIGUNGSCHELLE	11283913	18	8	552	11 28 390 8	AL BEGEHUNG
BEFESTIGUNGSCHELLE	11283913	18	9	568	11 28 583 8	AL BEGEHUNG
BEFESTIGUNGSCHELLE	11283913	18	9	575	11 28 626 1	AL BEGEHUNG

Bezeichnung	Artikel	Pos.	Menge	Blatt	Baugruppe	Bezeichnung
BEFESTIGUNGSCHELLE	11283913	17	12	578	11 24 132 4	AL KOPF KPL
BEFESTIGUNGSCHELLE	11283913	13	4	650	11 29 473 7	LAUFSTEG ZWISCHENSTUEC
BEFESTIGUNGSCHELLE	11283913	14	10	654	11 29 474 2	LAUFSTEG ZWISCHENSTUEC
BEFESTIGUNGSCHELLE	11283913	16	14	655	11 29 474 3	LAUFSTEG ZWISCHENSTUEC
BEFESTIGUNGSTEILE	10289973	41	1	434	10 22 506 8	FAHRERSITZ
BEHAELTER	11837331	8	1	8	11 92 958 8	LUFTFUEHRUNG KPL
BEHAELTER	592286714	9	2	419	10 35 008 0	KABINE
BELUEFTUNGSFILTER	11280868	12	1	65	10 56 073 3	KRAFTSTOFFTANK KPL
BELUEFTUNGSFILTER	510690614	13	1	60	10 56 070 1	TANK HYDR KPL
BERUEHRUNGSSCHUTZ	10351108	59	2	406	10 55 963 5	SCHALTSCHR X1
BESEILUNG EZW HAUPT AL	11227037	26	1	2	01 38 376 14	LR 1300 SX
BESEILUNG EZW NADEL AL	992338714	24	1	2	01 38 376 14	LR 1300 SX
BETAETIGUNGSEINHEIT	592054714	95	1	380	99 04 645 14	ANTRIEB
BETANKUNGSANLAGE NRS	10521554	858	1	4	01 38 376 14	LR 1300 SX
BETANKUNGSPUMPE	510095914	10	1	722	10 52 957 6	BETANKUNGSPUMPE KPL
BETANKUNGSPUMPE KPL	10529576	10	1	720	10 52 155 4	BETANKUNGSANLAGE NRS
BETRIEBSSTUNDENZAEHLER	10599206	31	1	408	10 51 907 9	STEUERSTAND LI
BEZEICHNUNGSKARTE	602835914	52	1	51	10 56 645 8	KLEMMKASTEN
BILDSCHIRMGEHAEUSE	11262812	2	1	437	11 26 095 6	STEUERKONSOLE RE KPL
BLASENSPEICHER	510641214	16	1	94	11 24 773 5	AGGREGAT HYDR
BLECH	10142763	2	1	287	10 14 274 4	KUEHLWASSERENTLUEFTUN
BLECH	10529071	11	1	699	10 58 064 7	VIDEOUEBERWACHUNGSANL
BLECH	10529074	12	1	699	10 58 064 7	VIDEOUEBERWACHUNGSANL
BLECH	10574357	19	2	319	11 24 409 1	VERKLEIDUNG
BLECH	10581590	21	1	319	11 24 409 1	VERKLEIDUNG
BLECH	11217232	18	4	313	11 24 409 0	VERKLEIDUNG OW EINBAU KP
BLECH	11274636	16	4	601	79 04 112 14	UNTERFLASCHE
BLECH	11310952	12	2	552	11 28 390 8	AL BEGEHUNG
BLECH	11310952	12	2	568	11 28 583 8	AL BEGEHUNG
BLECH	11310952	12	2	575	11 28 626 1	AL BEGEHUNG
BLECH	11311241	10	1	552	11 28 390 8	AL BEGEHUNG
BLECH	11311241	10	1	568	11 28 583 8	AL BEGEHUNG
BLECH	11311241	10	1	575	11 28 626 1	AL BEGEHUNG
BLECH	11311262	11	1	552	11 28 390 8	AL BEGEHUNG
BLECH	11311336	11	1	568	11 28 583 8	AL BEGEHUNG
BLECH	11311393	11	1	575	11 28 626 1	AL BEGEHUNG
BLECH	950102914	16	1	591	99 30 800 14	SPITZENENDSCHALTER EINBA
BLECH	950143914	37	2	590	99 23 398 14	ROLLENSATZ
BLECH	954432003	17	10	497	11 22 050 0	WINDEN EINBAU
BLECH	954432003	17	10	503	11 22 050 1	WINDEN EINBAU
BLECH	954486503	18	6	497	11 22 050 0	WINDEN EINBAU
BLECH	954486503	18	6	503	11 22 050 1	WINDEN EINBAU
BLECH	971363403	93	1	511	11 23 820 3	ANLENKSTUECK KPL
BLECH KPL	11236114	16	4	608	79 05 205 14	UNTERFLASCHE
BLENDE	10226479	5	1	423	10 35 007 6	SCHIEBETUER
BLENDE	11248964	21	1	313	11 24 409 0	VERKLEIDUNG OW EINBAU KP
BLENDE	11248966	22	1	313	11 24 409 0	VERKLEIDUNG OW EINBAU KP
BLENDE	11248990	19	2	313	11 24 409 0	VERKLEIDUNG OW EINBAU KP
BLENDE	11248991	15	2	313	11 24 409 0	VERKLEIDUNG OW EINBAU KP
BLENDE	11248992	20	2	313	11 24 409 0	VERKLEIDUNG OW EINBAU KP
BLENDENSCHRAUBE	11219933	8	1	104	11 21 991 0	PUMPENGEHAEUSE
BLINDNIET DIN 7337-A 4.8X16	10555185	13	4	651	11 30 694 4	SCHIENE KPL
BLINDSTOPFEN	602458214	15	8	411	10 53 171 8	TASTATUR
BLINDSTOPFEN	606907114	37	1	724	10 52 155 9	MODUL BETANKUNGSANLAG
BLINDSTOPFEN	692405708	15	4	417	11 95 272 6	SCHALLGEBER EL
BLINDSTOPFEN	693061214	26	15	516	11 90 151 1	KABELSATZ 1 ANLENKSTUECK
BLINDSTOPFEN	693061314	29	1	51	10 56 645 8	KLEMMKASTEN
BLINDSTOPFEN	693061314	25	1	516	11 90 151 1	KABELSATZ 1 ANLENKSTUECK
BLINDSTOPFEN	693061314	73	2	517	11 90 151 1	KABELSATZ 1 ANLENKSTUECK
BLINDSTOPFEN	693061414	24	8	516	11 90 151 1	KABELSATZ 1 ANLENKSTUECK

Bezeichnung	Artikel	Pos.	Menge	Blatt	Baugruppe	Bezeichnung
BLINDSTOPFEN	693061514	63	2	517	11 90 151 1	KABELSATZ 1 ANLENKSTUECK
BLINDSTOPFEN	693061514	52	2	595	97 14 959 03	SPITZENENDSCHALTER EL
BLITZLEUCHTE	10524928	90	1	404	11 27 973 6	KABINE EL
BLITZLEUCHTE	10524928	35	2	539	10 53 120 7	A-BOCK EL
BLOCK	11226015	10	1	387	51 14 347 14	DW SICHERUNGSBLOCK
BLOCK	943958914	30	1	20	11 29 618 6	OW HYDR
BLOCK	943958914	5	1	513	10 51 826 1	ANLENKSTUECK HYDR
BLOCK	946294214	25	1	20	11 29 618 6	OW HYDR
BODEN	11289833	25	1	685	59 21 826 14	ABSTUETZZYLINDER
BODENMATTE	592286914	25	1	419	10 35 008 0	KABINE
BODENPLATTE	388291208	16	72	467	11 89 365 0	RAUPENTRAEGER RE KPL
BODENPLATTE	388291208	16	72	478	11 89 365 1	RAUPENTRAEGER LI KPL
BOLZEN	10529084	15	1	699	10 58 064 7	VIDEOUEBERWACHUNGSANL
BOLZEN	10529086	16	1	699	10 58 064 7	VIDEOUEBERWACHUNGSANL
BOLZEN	10572058	11	4	681	11 89 568 6	SELBSTVERLADESYSTEM NR
BOLZEN	10574630	1	1	498	10 57 462 9	BOLZEN KPL
BOLZEN	11493575	4	1	601	79 04 112 14	UNTERFLASCHE
BOLZEN	11934415	4	4	641	99 23 405 14	ZWISCHENABSPANNUNG NR
BOLZEN	11942798	42	1	77	10 58 163 4	KABINENAUFHAENGUNG KPL
BOLZEN	11944129	30	4	188	11 24 113 8	MOTORLAGER KPL
BOLZEN	11946386	98	3	511	11 23 820 3	ANLENKSTUECK KPL
BOLZEN	11947719	27	2	333	11 24 483 7	BEF-TEILE OW
BOLZEN	592291514	1	1	429	59 22 914 14	PODESTSICHERUNG KPL
BOLZEN	9477429	18	1	126	10 13 975 2	RS SCHWENKJOCH
BOLZEN	9477439	13	2	117	10 11 835 0	ANSCHLUSSGEHAEUSE
BOLZEN	956067614	3	1	593	99 48 521 14	SPITZEN AL KPL
BOLZEN	956070214	9	1	593	99 48 521 14	SPITZEN AL KPL
BOLZEN	956711314	23	8	660	10 51 971 3	SELBSTVERLADESYSTEM NR
BOLZEN	956802414	13	1	590	99 23 398 14	ROLLENSATZ
BOLZEN	956802514	14	1	590	99 23 398 14	ROLLENSATZ
BOLZEN	959866614	7	1	370	99 29 258 14	EZW ROLLENPAKET
BOLZEN	959912614	16	6	341	99 29 803 14	VERZURRUNG BALLAST
BOLZEN	968523914	27	1	77	10 58 163 4	KABINENAUFHAENGUNG KPL
BOLZEN 100X1606 LHRD900-40	11239740	22	1	538	11 24 444 4	A-BOCK 1 KPL
BOLZEN 110X198 LHRD900-40	959912214	13	6	341	99 29 803 14	VERZURRUNG BALLAST
BOLZEN 115X200 LHRD900-40	949389914	12	2	538	11 24 444 4	A-BOCK 1 KPL
BOLZEN 120X270 35NICRMOV	959712214	1	2	82	99 23 451 14	ANLENKBOLZEN EINBAU
BOLZEN 15.9X59X25X83 LHRD	950387314	59	10	633	10 55 372 1	DACHGELAENDER NRS
BOLZEN 150X330	11230438	4	1	460	51 33 141 14	DOPPELWIRKZYL
BOLZEN 20X23 PA 6 G	956266814	3	1	540	91 90 584 14	WINKELANZEIGE
BOLZEN 30X46 LHRD900-40;1	11949153	15	2	559	11 94 087 8	MONTAGEEINHEIT
BOLZEN 30X46 LHRD900-40;1	11949153	37	2	640	99 10 116 14	SEILFUEHRUNG
BOLZEN 30X46 LHRD900-40;1	11949153	3	1	642	99 10 125 14	GABEL
BOLZEN 30X46 LHRD900-40;1	11949153	3	1	644	99 06 789 14	GABEL
BOLZEN 35X 120 LHRD750-30;1	953305103	27	1	640	99 10 116 14	SEILFUEHRUNG
BOLZEN 40X182 LHRD900-40;1	10351894	11	4	343	10 51 969 7	NADELEINZIEHWINDE
BOLZEN 48X58 LHRD900-40;1	485568414	38	2	640	99 10 116 14	SEILFUEHRUNG
BOLZEN 50X138 LHRD900-40;1	10534039	13	4	83	10 51 969 4	A-BOCK AUFRICHTZYL EINBA
BOLZEN 50X157 LHRD900-40;1	956847814	2	2	582	11 28 610 5	ARRETIERUNG KPL
BOLZEN 50X95 LHRD900-40;1	11938016	11	2	442	99 18 041 14	VERZURRUNG OW
BOLZEN 53X67 LHRD900-40;1	10550993	12	2	581	11 28 629 9	MONTAGETEILE
BOLZEN 53X82 LHRD900-40;1	949946714	13	2	581	11 28 629 9	MONTAGETEILE
BOLZEN 58X113 LHRD900-40;1	949174814	26	2	593	99 48 521 14	SPITZEN AL KPL
BOLZEN 58X95 LHRD900-40;1	948959414	31	4	593	99 48 521 14	SPITZEN AL KPL
BOLZEN 60X110 LHRD750-30;1	950663614	17	2	83	10 51 969 4	A-BOCK AUFRICHTZYL EINBA
BOLZEN 60X120 LHRD900-40;1	942804914	10	2	593	99 48 521 14	SPITZEN AL KPL
BOLZEN 63X120 LHRD900-40;1	949351814	5	4	643	99 23 420 14	ZWISCHENABSPANNUNG NR
BOLZEN 63X120 LHRD900-40;1	949351814	10	1	666	11 23 619 7	SELBSTVERLADESYSTEM NR
BOLZEN 63X140 LHRD900-40;1	959643514	11	4	581	11 28 629 9	MONTAGETEILE
BOLZEN 63X95 LHRD900-40;1	949196614	12	2	561	11 93 703 7	HALTESTANGE KPL

Bezeichnung	Artikel	Pos.	Menge	Blatt	Baugruppe	Bezeichnung
BOLZEN 63X95 LHRD900-40;1	949196614	12	2	570	11 93 702 0	HALTESTANGE KPL
BOLZEN 65X193 LHRD900-40;1	957831614	10	4	340	10 52 656 0	MONTAGETEILE
BOLZEN 68X105 LHRD750-30;1	948545514	39	2	640	99 10 116 14	SEILFUEHRUNG
BOLZEN 73X95 LHRD900-40;1	959575714	12	4	522	99 30 060 14	HALTESTANGE KPL
BOLZEN 73X95 LHRD900-40;1	959575714	12	4	560	99 24 404 14	HALTESTANGE KPL
BOLZEN 73X95 LHRD900-40;1	959575714	12	4	569	99 24 405 14	HALTESTANGE KPL
BOLZEN 73X95 LHRD900-40;1	959575714	12	8	576	99 24 406 14	HALTESTANGE KPL
BOLZEN 73X95 LHRD900-40;1	959575714	12	4	588	99 24 594 14	HALTESTANGE KPL
BOLZEN 75X240 LHRD900-40;1	959912114	12	6	341	99 29 803 14	VERZURRUNG BALLAST
BOLZEN 80X371 LHRD900-40;1	950581614	11	4	510	11 23 820 3	ANLENKSTUECK KPL
BOLZEN 80X371 LHRD900-40;1	950581614	10	1	550	11 28 726 4	BOLZEN KPL
BOLZEN 83X131 LHRD900-40;1	959921514	12	8	542	99 26 417 14	HALTESTANGE KPL
BOLZEN 83X131 LHRD900-40;1	959921514	17	4	588	99 24 594 14	HALTESTANGE KPL
BOLZEN DIN 1435-B 35H11X90	453050914	5	12	641	99 23 405 14	ZWISCHENABSPANNUNG NR
BOLZEN DIN 1435-B 35H11X90	453050914	4	12	643	99 23 420 14	ZWISCHENABSPANNUNG NR
BOLZEN DIN 1435-B 35H11X90	453050914	5	14	645	97 05 997 03	ZWISCHENABSPANNUNG NR
BOLZEN DIN EN 22340-B 25F7X	485501714	23	2	77	10 58 163 4	KABINENAUFHAENGUNG KPL
BOLZEN DIN EN 22340-B 25F8	450052114	30	2	77	10 58 163 4	KABINENAUFHAENGUNG KPL
BOLZEN DIN EN 22340-B 25F8	450052114	2	2	82	99 23 451 14	ANLENKBOLZEN EINBAU
BOLZEN DIN EN 22341-B 40H1	451436614	13	1	77	10 58 163 4	KABINENAUFHAENGUNG KPL
BOLZEN DIN EN 22341-B 50H11	485519214	19	1	666	11 23 619 7	SELBSTVERLADESYSTEM NR
BOLZEN DIN EN 22341-B 80H11	485518914	19	2	660	10 51 971 3	SELBSTVERLADESYSTEM NR
BOLZEN EN 10060 28X220X192	942594714	26	2	640	99 10 116 14	SEILFUEHRUNG
BOLZEN EN 10278 20X144 S3	958214314	2	1	585	11 28 357 6	MONTAGETEILE
BOLZEN KPL	10574629	11	4	497	11 22 050 0	WINDEN EINBAU
BOLZEN KPL	10574629	11	4	503	11 22 050 1	WINDEN EINBAU
BOLZEN KPL	11262110	11	4	687	11 89 568 8	SELBSTVERLADESYSTEM NR
BOLZEN KPL	11287264	11	4	549	11 24 570 3	AL ZWISCHENSTUECK KPL
BOLZEN KPL	11287264	11	4	567	11 24 570 9	AL ZWISCHENSTUECK KPL
BOLZEN KPL	11287264	11	4	574	11 24 571 5	AL ZWISCHENSTUECK KPL
BOLZEN KPL	959835714	12	4	687	11 89 568 8	SELBSTVERLADESYSTEM NR
BOLZEN KPL	992921714	29	2	467	11 89 365 0	RAUPENTRAEGER RE KPL
BOLZEN KPL	992921714	29	2	478	11 89 365 1	RAUPENTRAEGER LI KPL
BOLZEN KPL.	11213816	4	1	608	79 05 205 14	UNTERFLASCHE
BOLZEN M12X1.5 NIROSTA	10227129	9	1	519	61 61 541 14	KABELTROMMEL
BOLZEN RD20X394 LHRD900-	11942040	2	1	475	10 50 179 5	AUFSTIEG KPL
BOLZEN RD68X175 LHRD900-	959799614	27	8	660	10 51 971 3	SELBSTVERLADESYSTEM NR
BOLZENVERBINDUNG	910353714	8	2	581	11 28 629 9	MONTAGETEILE
BOWDENZUG	11230660	270	1	432	11 93 934 6	KLIMAANLAGE
BOWLE	10331395	14	1	215	10 30 300 7	KRAFTSTOFFVORFILTER
BOWLENDICHTUNG	10294170	9	1	215	10 30 300 7	KRAFTSTOFFVORFILTER
BRECHSTANGE 1200 MM	790036914	12	1	505	10 56 183 8	WERKZEUG
BRECHSTANGE 600 MM	885400114	14	1	505	10 56 183 8	WERKZEUG
BREMSBETAETIGUNGSEINHEI	10006595	96	1	396	90 01 376 2	DREHWERKANTRIEB
BREMSE DS	939347901	98	1	396	90 01 376 2	DREHWERKANTRIEB
BREMSE-DICHTUNGSSATZ	939589601	2	1	354	50 20 372 01	FEDERDRUCKLAMELLENBRE
BREMSFEDERSATZ	939348001	99	1	396	90 01 376 2	DREHWERKANTRIEB
BREMSFEDERSATZ	939589701	3	1	354	50 20 372 01	FEDERDRUCKLAMELLENBRE
BREMSFLANSCH	540272814	1	1	629	54 02 705 14	ANTRIEB KPL
BREMSLAMELLENSATZ	939347801	97	1	396	90 01 376 2	DREHWERKANTRIEB
BREMSLAMELLENSATZ	939589501	1	1	354	50 20 372 01	FEDERDRUCKLAMELLENBRE
BREMSVENTIL	10227399	60	1	346	51 22 527 14	OELMOTOR
BREMSVENTIL	512401414	60	1	363	51 22 942 14	OELMOTOR
BREMSVENTIL	512411914	10	1	455	11 22 473 8	VERSTELLUNG
BUCHSE	10115304	3	1	456	10 44 656 6	WECHSELVENTIL
BUCHSE	10145395	6	1	295	10 14 584 5	GENERATOR VORM.
BUCHSE	10227126	8	1	519	61 61 541 14	KABELTROMMEL
BUCHSE	11239698	37	2	538	11 24 444 4	A-BOCK 1 KPL
BUCHSE	11890145	2	2	469	10 55 716 2	LEITRAD KPL
BUCHSE	956070614	6	2	593	99 48 521 14	SPITZEN AL KPL

Bezeichnung	Artikel	Pos.	Menge	Blatt	Baugruppe	Bezeichnung
BUCHSE	959001414	10	1	370	99 29 258 14	EZW ROLLENPAKET
BUCHSE	959019014	11	3	64	10 56 073 2	KRAFTSTOFFTANK EINBAU
BUCHSE	959841114	39	4	538	11 24 444 4	A-BOCK 1 KPL
BUCHSE 100/130X33 S770QL;E	10336763	5	3	370	99 29 258 14	EZW ROLLENPAKET
BUCHSE 100/130X36 S770QL;E	959869314	3	3	370	99 29 258 14	EZW ROLLENPAKET
BUCHSE 100/80X40 E470;EN 10	954398803	15	2	581	11 28 629 9	MONTAGETEILE
BUCHSE 115/135X21 E470;EN	970859103	40	4	538	11 24 444 4	A-BOCK 1 KPL
BUCHSE 115/135X56 E470;EN	970588503	61	2	18	11 24 047 9	OW KPL
BUCHSE 120/150X88 E470;EN	954398703	60	2	18	11 24 047 9	OW KPL
BUCHSE 120X130X30 KUNST	10223371	11	1	370	99 29 258 14	EZW ROLLENPAKET
BUCHSE 13/28X15 S355J2;EN	970726703	19	4	497	11 22 050 0	WINDEN EINBAU
BUCHSE 13/28X15 S355J2;EN	970726703	19	4	503	11 22 050 1	WINDEN EINBAU
BUCHSE 140/160X100 GZ-CU	11233062	42	1	590	99 23 398 14	ROLLENSATZ
BUCHSE 140/160X55 LHR355-	956803414	16	2	590	99 23 398 14	ROLLENSATZ
BUCHSE 140/160X77 LHR355-	956070514	4	2	593	99 48 521 14	SPITZEN AL KPL
BUCHSE 140/168.3X40 LHR355-	956092714	25	2	593	99 48 521 14	SPITZEN AL KPL
BUCHSE 20X24.9X31.9 POM;DI	958471514	17	1	321	10 57 883 5	TUER
BUCHSE 20X24.9X31.9 POM;DI	958471514	17	1	323	10 57 897 6	TUER
BUCHSE 20X24.9X31.9 POM;DI	958471514	6	1	325	10 57 940 0	TUER
BUCHSE 20X24.9X31.9 POM;DI	958471514	6	1	326	10 56 623 7	TUER
BUCHSE 20X24.9X31.9 POM;DI	958471514	14	1	327	10 56 580 8	TUER
BUCHSE 20X24X30 POM;DIN	797029114	7	1	321	10 57 883 5	TUER
BUCHSE 20X24X30 POM;DIN	797029114	7	1	323	10 57 897 6	TUER
BUCHSE 20X24X30 POM;DIN	797029114	5	1	325	10 57 940 0	TUER
BUCHSE 20X24X30 POM;DIN	797029114	5	1	326	10 56 623 7	TUER
BUCHSE 20X24X30 POM;DIN	797029114	7	1	327	10 56 580 8	TUER
BUCHSE 25/40X56	790212314	39	2	77	10 58 163 4	KABINENAUFHAENGUNG KPL
BUCHSE 30/40X38 GZ-CUSN7Z	967216303	2	1	623	96 72 161 03	SEILROLLE KPL
BUCHSE 50/55X30	708014114	4	4	582	11 28 610 5	ARRETIERUNG KPL
BUCHSE 50/60X35 CUZN25AL5	10504737	190	1	86	59 21 041 14	DOPPELWIRKZYL
BUCHSE 50X60X42	11230849	18	2	538	11 24 444 4	A-BOCK 1 KPL
BUCHSE 51/70X13.5 POLYAMI	10534042	14	8	83	10 51 969 4	A-BOCK AUFRICHTZYL EINBA
BUCHSE 60X70X25 CUZN25AL	10546993	20	2	535	11 27 536 5	RUECKFALLSTUETZEN EINBA
BUCHSE 75.5X110X2.5 POM;DI	10336928	18	4	542	99 26 417 14	HALTESTANGE KPL
BUCHSE 75X110X10 POM;DIN	10336924	16	8	542	99 26 417 14	HALTESTANGE KPL
BUCHSE 75X110X5 POM;DIN	10336926	17	8	542	99 26 417 14	HALTESTANGE KPL
BUCHSE 90.5/101.6X26 LHR35	949740614	11	10	640	99 10 116 14	SEILFUEHRUNG
BUCHSE 90/110X36 S355J2H;E	949988214	19	2	590	99 23 398 14	ROLLENSATZ
BUCHSE 90/110X50 E470;EN 10	385037314	14	2	581	11 28 629 9	MONTAGETEILE
BUCHSE 91/101.6X145 LHR355-	956805414	18	2	590	99 23 398 14	ROLLENSATZ
BUCHSE 91/101.6X5 LHR355-20	956803714	25	2	590	99 23 398 14	ROLLENSATZ
BUCHSE 91/101.6X60 LHR355-	956805314	17	2	590	99 23 398 14	ROLLENSATZ
BUCHSE EN 10060 17.5X26.5X2	10588730	12	3	58	10 56 070 0	TANK HYDR EINBAU
BUCHSE EN 10210-2 140.5/159	956803214	32	2	590	99 23 398 14	ROLLENSATZ
BUCHSENEINSATZ	605609514	94	1	46	11 24 519 0	OW EL
BUCHSENEINSATZ	605609514	32	1	51	10 56 645 8	KLEMMKASTEN
BUCHSENEINSATZ	605609514	62	1	516	11 90 151 1	KABELSATZ 1 ANLENKSTUECK
BUCHSENEINSATZ	605609514	51	1	595	97 14 959 03	SPITZENENDSCHALTER EL
BUCHSENEINSATZ	605612014	42	1	51	10 56 645 8	KLEMMKASTEN
BUCHSENEINSATZ	605612014	72	1	517	11 90 151 1	KABELSATZ 1 ANLENKSTUECK
BUCHSENGEHAEUSE	6203137	93	1	404	11 27 973 6	KABINE EL
BUCHSENKONTAKT	6003031	47	6	403	11 27 973 6	KABINE EL
BUCHSENKONTAKT	6003031	95	6	404	11 27 973 6	KABINE EL
BUCHSENKONTAKT	602339508	13	3	417	11 95 272 6	SCHALLGEBER EL
BUEGEL	10099007	5	1	375	99 29 388 14	BUEGEL KPL
BUEGEL	10099010	6	1	372	99 33 537 14	SEILSCHUTZ EZW KPL
BUEGEL	10289976	72	1	434	10 22 506 8	FAHRERSITZ
BUEGEL	10336583	10	2	57	10 51 961 6	OELKUEHLER EINBAU
BUEGEL	10336584	11	2	57	10 51 961 6	OELKUEHLER EINBAU
BUEGEL	10336709	1	1	375	99 29 388 14	BUEGEL KPL

Bezeichnung	Artikel	Pos.	Menge	Blatt	Baugruppe	Bezeichnung
BUEGEL	10336711	2	2	373	99 29 389 14	SEITENTEIL
BUEGEL	10336711	2	2	374	99 29 392 14	SEITENTEIL
BUEGEL	10349206	7	8	329	10 54 591 0	MOTORABDECKUNG
BUEGEL	10445651	39	2	333	11 24 483 7	BEF-TEILE OW
BUEGEL	10555261	8	2	643	99 23 420 14	ZWISCHENABSPANNUNG NR
BUEGEL	10575967	13	1	333	11 24 483 7	BEF-TEILE OW
BUEGEL	10575968	15	1	333	11 24 483 7	BEF-TEILE OW
BUEGEL	10575969	18	1	333	11 24 483 7	BEF-TEILE OW
BUEGEL	10575970	23	8	333	11 24 483 7	BEF-TEILE OW
BUEGEL	10575971	37	3	333	11 24 483 7	BEF-TEILE OW
BUEGEL	10575985	20	2	333	11 24 483 7	BEF-TEILE OW
BUEGEL	10579757	26	1	333	11 24 483 7	BEF-TEILE OW
BUEGEL	10592334	19	1	584	10 59 863 3	PENDEL KPL
BUEGEL	10592619	43	1	333	11 24 483 7	BEF-TEILE OW
BUEGEL	10592621	44	1	333	11 24 483 7	BEF-TEILE OW
BUEGEL	10597981	2	2	79	10 56 067 3	BATTERIE EINBAU KPL
BUEGEL	11234405	58	1	333	11 24 483 7	BEF-TEILE OW
BUEGEL	11234413	59	1	333	11 24 483 7	BEF-TEILE OW
BUEGEL	11247011	38	1	333	11 24 483 7	BEF-TEILE OW
BUEGEL	11247375	22	1	333	11 24 483 7	BEF-TEILE OW
BUEGEL	11247791	29	1	333	11 24 483 7	BEF-TEILE OW
BUEGEL	11247808	33	1	333	11 24 483 7	BEF-TEILE OW
BUEGEL	11248460	12	1	211	11 24 114 3	ABGASANLAGE
BUEGEL	11248969	9	2	313	11 24 409 0	VERKLEIDUNG OW EINBAU KP
BUEGEL	11257849	72	1	335	11 24 483 7	BEF-TEILE OW
BUEGEL	11257851	75	3	335	11 24 483 7	BEF-TEILE OW
BUEGEL	11263413	16	1	188	11 24 113 8	MOTORLAGER KPL
BUEGEL	11265945	35	1	333	11 24 483 7	BEF-TEILE OW
BUEGEL	11279036	44	1	217	11 24 114 5	ANLAGE HARNSTOFF EINBAU
BUEGEL	11279237	48	1	217	11 24 114 5	ANLAGE HARNSTOFF EINBAU
BUEGEL	11308593	14	1	211	11 24 114 3	ABGASANLAGE
BUEGEL	11308594	15	1	211	11 24 114 3	ABGASANLAGE
BUEGEL	7370581	73	1	434	10 22 506 8	FAHRERSITZ
BUEGEL	949758314	24	1	333	11 24 483 7	BEF-TEILE OW
BUEGEL	958478414	56	2	315	11 24 409 0	VERKLEIDUNG OW EINBAU KP
BUEGEL	958478414	10	10	329	10 54 591 0	MOTORABDECKUNG
BUEGEL	958478414	15	4	483	99 26 718 14	PODEST
BUEGEL	958478414	5	2	636	11 24 575 5	PODEST
BUEGEL	959465714	38	2	313	11 24 409 0	VERKLEIDUNG OW EINBAU KP
BUEGEL	959465714	17	1	705	11 93 621 2	KLIMAANLAGE NRS
BUEGEL	967313703	25	1	333	11 24 483 7	BEF-TEILE OW
BUEGEL	971304903	1	2	476	99 08 357 14	ANHAENGEKETTE
BUEGEL KPL	992938814	3	4	372	99 33 537 14	SEILSCHUTZ EZW KPL
BUEGEL SCHWK	10574837	15	1	631	10 55 372 1	DACHGELAENDER NRS
BUEGEL SCHWK	10575981	11	1	333	11 24 483 7	BEF-TEILE OW
BUEGEL SCHWK	10575984	14	1	333	11 24 483 7	BEF-TEILE OW
BUEGEL SCHWK	10576104	19	1	333	11 24 483 7	BEF-TEILE OW
BUEGEL SCHWK	10585933	16	2	631	10 55 372 1	DACHGELAENDER NRS
BUEGEL SCHWK	10585936	17	1	631	10 55 372 1	DACHGELAENDER NRS
BUEGELSCHELLE	10144699	20	1	308	11 90 032 5	ABGASANLAGE
BUNDBOLZEN	11297460	2	1	693	11 23 623 3	TASCHENSCHLOSS
BUNDBUCHSE	592290614	4	1	428	59 22 905 14	SPIEGEL + SONNENBLENDE
BUNDBUCHSE 40/80X51 CUSN	790519814	11	2	77	10 58 163 4	KABINENAUFHAENGUNG KPL
BUNDMUTTER M14X1.5	514618508	47	1	106	11 21 993 0	PUMPENGEHAEUSE
BUNDSCHRAUBE M33X220 10.	11266734	12	76	69	10 51 963 1	OW DREHVERBINDUNG EINBA
BUNDSCHRAUBE M33X245 10.	10512966	10	80	441	10 51 969 6	VERBINDUNG OW UW
BUNDSCHRAUBE MO90X4108	10522847	2	1	599	79 03 862 14	LASTHAKEN
C-SCHIENE SCHWK	10599614	47	1	333	11 24 483 7	BEF-TEILE OW
CAN MODUL	10351656	21	1	45	11 24 519 0	OW EL
CAN MODUL	10351660	23	1	45	11 24 519 0	OW EL

Bezeichnung	Artikel	Pos.	Menge	Blatt	Baugruppe	Bezeichnung
CAN MODUL	10351667	22	1	45	11 24 519 0	OW EL
CAN MODUL	10351668	26	1	45	11 24 519 0	OW EL
CAN MODUL	10351671	24	1	45	11 24 519 0	OW EL
CAN MODUL	10351672	27	1	45	11 24 519 0	OW EL
CAN MODUL	10351674	28	1	45	11 24 519 0	OW EL
CAN MODUL	10677274	23	1	414	11 26 095 7	STEUERSTAND RE
CLIP	11909483	130	1	432	11 93 934 6	KLIMAANLAGE
CLIP	11909497	150	1	432	11 93 934 6	KLIMAANLAGE
CRIMPKONTAKT	605608401	44	24	516	11 90 151 1	KABELSATZ 1 ANLENKSTUECK
DACH	10545911	3	1	313	11 24 409 0	VERKLEIDUNG OW EINBAU KP
DACH	10545914	5	1	313	11 24 409 0	VERKLEIDUNG OW EINBAU KP
DACH	10545916	7	1	313	11 24 409 0	VERKLEIDUNG OW EINBAU KP
DACH	10545917	8	1	313	11 24 409 0	VERKLEIDUNG OW EINBAU KP
DACH	10545957	11	1	313	11 24 409 0	VERKLEIDUNG OW EINBAU KP
DACH	10545958	12	1	313	11 24 409 0	VERKLEIDUNG OW EINBAU KP
DACH	10545968	3	1	329	10 54 591 0	MOTORABDECKUNG
DACH	10545969	4	1	329	10 54 591 0	MOTORABDECKUNG
DACH	10545970	5	1	329	10 54 591 0	MOTORABDECKUNG
DACH	10546335	6	1	329	10 54 591 0	MOTORABDECKUNG
DACH	10563073	16	1	313	11 24 409 0	VERKLEIDUNG OW EINBAU KP
DACH	10563099	1	1	329	10 54 591 0	MOTORABDECKUNG
DACH	11244758	14	1	313	11 24 409 0	VERKLEIDUNG OW EINBAU KP
DACH	11244865	13	1	313	11 24 409 0	VERKLEIDUNG OW EINBAU KP
DACHGELAENDER NRS	10553721	553	1	3	01 38 376 14	LR 1300 SX
DACHSCHEIBE	592288614	44	1	419	10 35 008 0	KABINE
DATEN KARTE CF2	10541109	32	1	406	10 55 963 5	SCHALTSCHR X1
DECKEL	10122317	1	1	307	10 14 637 4	VERSCHLUSSTEILE
DECKEL	10127967	1	1	302	10 12 797 9	VERSCHLUSSTEILE
DECKEL	10133334	8	1	115	10 11 834 9	DOPPELV.PUMPE
DECKEL	10134561	12	1	123	10 13 333 4	DECKEL
DECKEL	10149013	11	1	235	10 15 529 8	OELWANNE VORM.
DECKEL	10520927	14	1	65	10 56 073 3	KRAFTSTOFFTANK KPL
DECKEL	10554227	11	1	651	11 30 694 4	SCHIENE KPL
DECKEL	10554228	12	1	651	11 30 694 4	SCHIENE KPL
DECKEL	10572054	14	4	681	11 89 568 6	SELBSTVERLADESYSTEM NR
DECKEL	10572241	3	1	459	10 55 154 8	SCHNELLVERSCHLUSSKUPPL
DECKEL	10572242	3	1	514	10 55 157 6	SCHNELLVERSCHLUSSKUPPL
DECKEL	10593544	48	2	402	11 27 970 6	KABINE KPL
DECKEL	10593554	49	1	402	11 27 970 6	KABINE KPL
DECKEL	10595280	12	2	192	10 58 017 0	RUECKLAUFROHR
DECKEL	10687924	82	1	410	10 03 610 7	TASTATUR BEDIENPULT X11
DECKEL	11217289	5	1	191	10 57 532 2	ANSAUGROHR OEL KPL
DECKEL	11219927	2	1	101	11 21 990 5	VERSTELLUNG
DECKEL	11219929	3	1	101	11 21 990 5	VERSTELLUNG
DECKEL	11226090	110	1	387	51 14 347 14	DW SICHERUNGSBLOCK
DECKEL	11233332	148	1	30	11 28 647 6	VENTILBLOCK
DECKEL	11233333	150	2	30	11 28 647 6	VENTILBLOCK
DECKEL	11233338	151	8	30	11 28 647 6	VENTILBLOCK
DECKEL	11267378	1	1	102	11 21 992 7	DECKEL
DECKEL	11267396	1	1	103	11 21 992 9	DECKEL
DECKEL	11301913	147	1	30	11 28 647 6	VENTILBLOCK
DECKEL	385072014	65	2	77	10 58 163 4	KABINENAUFHAENGUNG KPL
DECKEL	7027755	3	1	215	10 30 300 7	KRAFTSTOFFVORFILTER
DECKEL	9275429	72	1	129	92 75 443	RS DECKEL
DECKEL	932037701	35	1	350	93 88 500 01	SEILTROMMEL
DECKEL	939554301	20	1	350	93 88 500 01	SEILTROMMEL
DECKEL	942264714	21	2	60	10 56 070 1	TANK HYDR KPL
DECKEL	949196514	8	2	370	99 29 258 14	EZW ROLLENPAKET
DECKEL	949724114	23	2	590	99 23 398 14	ROLLENSATZ
DECKEL	971333403	13	1	467	11 89 365 0	RAUPENTRAEGER RE KPL

Bezeichnung	Artikel	Pos.	Menge	Blatt	Baugruppe	Bezeichnung
DECKEL	971333403	13	1	478	11 89 365 1	RAUPENTRAEGER LI KPL
DECKEL KPL	10501620	1	1	44	55 09 453 14	OELMOTOR
DECKEL KPL	10548543	35	1	20	11 29 618 6	OW HYDR
DECKEL KPL	10551191	21	2	446	11 89 300 5	VERROHRUNG HYDR
DECKPLATTE	5005525	41	4	480	11 31 390 8	MITTELTEIL KPL
DECKPLATTE	602016514	73	4	511	11 23 820 3	ANLENKSTUECK KPL
DECKPLATTE	602025814	93	3	196	11 24 114 0	KUEHLER EINBAU WASSER
DECKPLATTE	602026414	48	3	467	11 89 365 0	RAUPENTRAEGER RE KPL
DECKPLATTE	602026414	48	3	478	11 89 365 1	RAUPENTRAEGER LI KPL
DECKPLATTE	7005053	56	1	8	11 92 958 8	LUFTFUEHRUNG KPL
DECKPLATTE	7005053	92	3	196	11 24 114 0	KUEHLER EINBAU WASSER
DECKPLATTE	7005053	39	2	480	11 31 390 8	MITTELTEIL KPL
DECKPLATTE	7008583	40	2	480	11 31 390 8	MITTELTEIL KPL
DICHTKANTENRING	10588729	5	1	530	59 20 224 14	LASTHALTEVENTIL
DICHTMUTTER M12X1.75	7005072	18	2	451	51 24 059 14	V.MOTOR
DICHTRING		81	1	352	93 88 497 01	PLANETENGETRIEBE
DICHTRING		87	1	353	93 88 497 01	PLANETENGETRIEBE
DICHTRING	10011864	8	2	14	11 41 475 7	ANBAUTEILE LUFTPRESSER
DICHTRING	10011864	6	17	270	10 14 588 5	LECKOELRUECKLAUF
DICHTRING	10011864	7	2	294	10 14 622 4	LADEDRUCKREGELUNG
DICHTRING	10011865	5	2	260	10 15 278 7	DS HOCHDRUCKPUMPE
DICHTRING	10011865	11	2	270	10 14 588 5	LECKOELRUECKLAUF
DICHTRING	10011866	19	3	270	10 14 588 5	LECKOELRUECKLAUF
DICHTRING	10011866	2	11	285	10 14 821 7	ROHRLEITUNG ANBAU
DICHTRING	10011866	6	1	287	10 14 274 4	KUEHLWASSERENTLUEFTUN
DICHTRING	10011867	4	8	14	11 41 475 7	ANBAUTEILE LUFTPRESSER
DICHTRING	10011867	16	2	293	10 14 511 2	ABGASSTUTZEN ANBAU
DICHTRING	10011868	2	1	238	10 13 451 7	NIVEAUGEBER
DICHTRING	10011868	6	4	260	10 15 278 7	DS HOCHDRUCKPUMPE
DICHTRING	10011868	7	14	269	10 14 333 9	KRAFTSTOFFLEITUNGEN
DICHTRING	10011870	13	1	11	11 92 891 3	KOMPRESSOR NRS
DICHTRING	10011870	8	1	274	10 14 736 9	ANSAUGSTUTZEN ANBAU
DICHTRING	10011870	27	1	292	10 14 013 6	ATL-ANBAU
DICHTRING	10011871	14	2	270	10 14 588 5	LECKOELRUECKLAUF
DICHTRING	10113731	3	1	253	10 15 259 2	UEBERDRUCKVENTIL
DICHTRING	11226035	80	1	387	51 14 347 14	DW SICHERUNGSBLOCK
DICHTRING	11226086	92	1	387	51 14 347 14	DW SICHERUNGSBLOCK
DICHTRING	4900262	32	7	195	11 24 114 0	KUEHLER EINBAU WASSER
DICHTRING	7013116	22	1	122	92 73 644	DS REGELVENTIL
DICHTRING	7013116	22	1	125	92 78 875	DRUCKABSCHNEIDUNG
DICHTRING	710004514	5	4	582	11 28 610 5	ARRETIERUNG KPL
DICHTRING	710020114	15	1	629	54 02 705 14	ANTRIEB KPL
DICHTRING	710031014	10	1	628	54 02 704 14	ABTRIEB KPL
DICHTRING	710069314	11	1	486	11 26 260 6	WINDE 1 HYDR
DICHTRING	710069314	11	1	501	11 26 261 1	WINDE 2 HYDR
DICHTRING	7101008	5	1	235	10 15 529 8	OELWANNE VORM.
DICHTRING	7101021	3	1	229	10 13 845 0	ENDREGELVENTIL
DICHTRING	7101021	7	1	235	10 15 529 8	OELWANNE VORM.
DICHTRING	7101021	10	1	236	50 04 624	OELABLASSSCHRAUBE
DICHTRING	7101022	23	4	60	10 56 070 1	TANK HYDR KPL
DICHTRING	7101022	33	1	195	11 24 114 0	KUEHLER EINBAU WASSER
DICHTRING	710102514	56	4	202	11 24 114 1	KUEHLER EINBAU LADELUFT
DICHTRING	710102514	10	2	718	11 31 446 3	LADELUFTROHR KPL
DICHTRING	710103714	34	1	195	11 24 114 0	KUEHLER EINBAU WASSER
DICHTRING	710103814	5	4	85	10 51 969 5	A-BOCK AUFRICHTZYL HYDR
DICHTRING	710104514	48	1	8	11 92 958 8	LUFTFUEHRUNG KPL
DICHTRING	710104514	31	2	626	54 02 702 14	SEILTROMMEL KPL
DICHTRING	710121014	123	1	380	99 04 645 14	ANTRIEB
DICHTRING	7381225	14	1	228	10 14 768 6	AGGREGATETRAEGER ANBA
DICHTRING	7381225	13	1	252	10 12 948 0	OELKUEHLER VORM.

Bezeichnung	Artikel	Pos.	Menge	Blatt	Baugruppe	Bezeichnung
DICHTRING	7381367	2	1	121	90 74 418	REGELVENTIL
DICHTRING	7381367	94	2	122	92 73 644	DS REGELVENTIL
DICHTRING	7610225	14	1	356	93 36 755 01	OELMESSEINRICHTUNG
DICHTRING	7610225	6	1	398	92 76 934 01	OELEINFUELLSTUTZEN
DICHTRING	761022903	2	1	356	93 36 755 01	OELMESSEINRICHTUNG
DICHTRING	761022903	21	1	356	93 36 755 01	OELMESSEINRICHTUNG
DICHTRING	790295414	61	2	380	99 04 645 14	ANTRIEB
DICHTRING	790347114	550	11	98	11 24 682 0	VERTEILERGETRIEBE
DICHTRING	790347214	560	1	98	11 24 682 0	VERTEILERGETRIEBE
DICHTRING	790403914	310	1	98	11 24 682 0	VERTEILERGETRIEBE
DICHTRING	790444514	65	1	380	99 04 645 14	ANTRIEB
DICHTRINGDECKEL	592178514	20	1	98	11 24 682 0	VERTEILERGETRIEBE
DICHTSATZ KPL.	10138033	90	1	139	10 12 878 7	V.PUMPE
DICHTSATZ KPL.	512402214	990	1	363	51 22 942 14	OELMOTOR
DICHTSCHEIBE	10154459	2	1	227	10 15 445 8	ZYLINDER
DICHTSCHEIBE	592288114	31	1	426	59 22 871 14	FRONTSCHEIBE KPL
DICHTSCHRAUBE	11220932	4	1	166	10 22 650 5	V.PUMPE
DICHTSCHRAUBE	11221267	5	1	166	10 22 650 5	V.PUMPE
DICHTSTOPFEN		2	1	352	93 88 497 01	PLANETENGETRIEBE
DICHTSTOPFEN		9	3	352	93 88 497 01	PLANETENGETRIEBE
DICHTSTOPFEN	10030837	14	14	226	11 38 961 7	KURBELGEHAEUSE KPL. MIT
DICHTSTOPFEN	10036325	8	1	246	11 44 800 5	KIPPHEBELBOCK VORM.
DICHTSTOPFEN	10465711	15	1	228	10 14 768 6	AGGREGATETRAEGER ANBA
DICHTSTOPFEN	10465711	11	1	288	10 14 601 2	WASSERSAMMELLEITUNG K
DICHTSTOPFEN	11389287	3	2	271	10 14 382 8	EINSPRITZLEITUNGEN
DICHTSTOPFEN	605614714	14	2	722	10 52 957 6	BETANKUNGSPUMPE KPL
DICHTSTOPFEN	7008121	24	4	153	10 14 131 6	ANSCHLUSSPLATTE VORM.
DICHTSTOPFEN	7380480	7	1	471	96 93 178 01	FAHRANTRIEB
DICHTSTOPFEN	7380490	23	2	153	10 14 131 6	ANSCHLUSSPLATTE VORM.
DICHTSTOPFEN	7380779	16	2	256	10 13 382 3	ABSAUGPUMPE VORM.
DICHTSTOPFEN	7382069	8	1	226	11 38 961 7	KURBELGEHAEUSE KPL. MIT
DICHTUNG	10115623	18	1	292	10 14 013 6	ATL-ANBAU
DICHTUNG	10117891	2	1	251	10 12 948 1	OELKUEHLER ANBAU
DICHTUNG	10118556	2	6	273	10 14 736 6	LUFTANSAUGROHR ANBAU
DICHTUNG	10119923	3	2	252	10 12 948 0	OELKUEHLER VORM.
DICHTUNG	10125740	3	1	292	10 14 013 6	ATL-ANBAU
DICHTUNG	10126427	3	1	234	10 14 844 4	OELWANNE MIT BEFEST.
DICHTUNG	10126510	2	1	247	10 13 475 1	ZYLINDERKOPFDECKEL ANBA
DICHTUNG	10126510	2	1	248	10 12 653 5	ZYLINDERKOPFDECKEL ANBA
DICHTUNG	10126510	3	1	250	10 13 469 6	ZYLINDERKOPFDECKEL ANBA
DICHTUNG	10126738	2	1	228	10 14 768 6	AGGREGATETRAEGER ANBA
DICHTUNG	10135885	2	6	289	10 14 144 4	ABGASROHR ANBAU
DICHTUNG	10137721	5	1	299	10 11 557 7	SCHWUNGRADGEHAEUSE AN
DICHTUNG	10144102	31	1	308	11 90 032 5	ABGASANLAGE
DICHTUNG	10144861	14	1	217	11 24 114 5	ANLAGE HARNSTOFF EINBAU
DICHTUNG	10294171	4	1	215	10 30 300 7	KRAFTSTOFFVORFILTER
DICHTUNG	10297876	2	1	171	10 35 160 3	STEUERVENTIL
DICHTUNG	10297876	2	1	180	10 11 497 5	STEUERVENTIL
DICHTUNG	11250971	2	1	425	11 25 097 0	SCHIEBEFENSTER
DICHTUNG	11251434	6	1	450	11 89 617 8	DS
DICHTUNG	552006114	26	2	60	10 56 070 1	TANK HYDR KPL
DICHTUNG	7011131	2	1	236	50 04 624	OELABLASSSCHRAUBE
DICHTUNG	7412935	18	1	215	10 30 300 7	KRAFTSTOFFVORFILTER
DICHTUNG	790230014	9	2	702	10 51 728 1	VERROHRUNG HYDR
DICHTUNG	9079130	2	1	300	10 11 912 8	VERSCHLUSSTEILE
DICHTUNG	9144762	3	1	249	91 44 757	VERSCHLUSSDECKEL
DICHTUNG	9271963	11	2	718	11 31 446 3	LADELUFTROHR KPL
DICHTUNG	9275428	76	1	122	92 73 644	DS REGELVENTIL
DICHTUNG	9275428	76	1	129	92 75 443	RS DECKEL
DICHTUNG	9882207	15	2	115	10 11 834 9	DOPPELV.PUMPE

Bezeichnung	Artikel	Pos.	Menge	Blatt	Baugruppe	Bezeichnung
DICHTUNG	9882207	15	2	138	92 76 408	DS DOPPELPUMPE
DICHTUNGSMITTEL	8627609	109	1	235	10 15 529 8	OELWANNE VORM.
DICHTUNGSMODUL	602453214	5	2	415	91 65 251 14	KABELDURCHFUEHRUNG KAB
DICHTUNGSMODUL	602453914	8	2	415	91 65 251 14	KABELDURCHFUEHRUNG KAB
DICHTUNGSMODUL	602454614	2	2	415	91 65 251 14	KABELDURCHFUEHRUNG KAB
DICHTUNGSMODUL	602454714	4	2	415	91 65 251 14	KABELDURCHFUEHRUNG KAB
DICHTUNGSMODUL	602457014	3	2	415	91 65 251 14	KABELDURCHFUEHRUNG KAB
DICHTUNGSMODUL	602457114	6	2	415	91 65 251 14	KABELDURCHFUEHRUNG KAB
DICHTUNGSMODUL	602457214	7	2	415	91 65 251 14	KABELDURCHFUEHRUNG KAB
DICHTUNGSMUTTER M6	7361600	21	1	122	92 73 644	DS REGELVENTIL
DICHTUNGSMUTTER M6	7361600	21	1	125	92 78 875	DRUCKABSCHNEIDUNG
DICHTUNGSMUTTER M8	7361601	11	1	109	11 06 730 4	ABSCHALTVENTIL
DICHTUNGSMUTTER M8	7361601	37	2	122	92 73 644	DS REGELVENTIL
DICHTUNGSPROFIL	11918670	13	4	321	10 57 883 5	TUER
DICHTUNGSPROFIL	11918670	11	4.1	323	10 57 897 6	TUER
DICHTUNGSPROFIL	11918670	13	2.6	325	10 57 940 0	TUER
DICHTUNGSPROFIL	11918670	13	1.35	326	10 56 623 7	TUER
DICHTUNGSPROFIL	11918670	11	2.8	327	10 56 580 8	TUER
DICHTUNGSSATZ	10215808	999	1	531	51 04 292 14	WEGEVENTIL
DIESELMOTOR	12425454	66	1	92	11 24 048 0	ZENTRALAGGREGAT
DIESELMOTOR UMBAU	11930987	1	1	5	11 93 045 7	UMBAUSATZ NRS
DISTANZBOLZEN	11274557	9	4	608	79 05 205 14	UNTERFLASCHE
DISTANZHUELSE	11217169	47	6	217	11 24 114 5	ANLAGE HARNSTOFF EINBAU
DISTANZHUELSE 11X21X45 42	10141438	7	24	289	10 14 144 4	ABGASROHR ANBAU
DISTANZHUELSE 18X8.5X10	9132577	2	4	291	10 14 737 0	HITZESCHUTZ MIT BEFEST.
DISTANZHUELSE 18X8.5X10	9132577	93	1	305	10 15 028 8	KABELBAUM ANBAU
DISTANZRING 42X51X1.3 CK7	9072437	10	1	128	90 72 436	DISTANZRINGSATZ
DISTANZRING 42X51X1.4 CK7	9072438	11	1	128	90 72 436	DISTANZRINGSATZ
DISTANZRING 42X51X1.5 CK7	9072439	12	1	128	90 72 436	DISTANZRINGSATZ
DISTANZRING 42X51X1.6 CK7	9072440	13	1	128	90 72 436	DISTANZRINGSATZ
DISTANZRING 42X51X1.9 CK7	9074332	33	1	128	90 72 436	DISTANZRINGSATZ
DISTANZRING 91/127X8 S355J	956803514	24	2	590	99 23 398 14	ROLLENSATZ
DISTANZRING CK75;DIN 17222	9074307	31	1	128	90 72 436	DISTANZRINGSATZ
DISTANZRING CK75;DIN 17222	9074308	32	1	128	90 72 436	DISTANZRINGSATZ
DISTANZRINGSATZ	9072436	70	1	127	90 77 464	RS FLANSCH
DISTANZROHR	11493578	14	2	601	79 04 112 14	UNTERFLASCHE
DISTANZSCHEIBE	10226471	14	1	426	59 22 871 14	FRONTSCHEIBE KPL
DISTANZSCHEIBE RD30X1 AL	10349263	52	24	315	11 24 409 0	VERKLEIDUNG OW EINBAU KP
DISTANZSTUECK	10227757	17	4	483	99 26 718 14	PODEST
DISTANZSTUECK	11216088	32	1	77	10 58 163 4	KABINENAUFHAENGUNG KPL
DISTANZSTUECK	289064214	24	4	361	10 51 968 6	EZW OW EINBAU KPL
DOPPEL T-MEISTERSCH EIN	10511274	15	1	2	01 38 376 14	LR 1300 SX
DOPPELABREISSSTOPFEN	10424238	30	3	106	11 21 993 0	PUMPENGEHAEUSE
DOPPELABREISSSTOPFEN	7012971	29	3	106	11 21 993 0	PUMPENGEHAEUSE
DOPPELABREISSSTOPFEN	7012971	31	1	455	11 22 473 8	VERSTELLUNG
DOPPELABREISSSTOPFEN	7022127	31	1	168	11 22 127 4	PUMPENELEMENT
DOPPELABREISSSTOPFEN	7022127	31	1	177	11 21 593 6	PUMPENELEMENT
DOPPELABREISSSTOPFEN	7022127	28	5	455	11 22 473 8	VERSTELLUNG
DOPPELDRUCKBEGRENZUNG	10537607	10	2	34	10 35 148 6	VENTILBLOCK
DOPPELHAKEN KPL	11274829	1	1	610	11 27 480 1	AUFHAENGUNG
DOPPELHOHLSCHRAUBE 6X6	10014864	7	1	270	10 14 588 5	LECKOELRUECKLAUF
DOPPELRUECKSCHLAGVENTI	511607014	6	1	528	10 51 959 1	VERROHRUNG HYDR
DOPPELV.PUMPE	10118349	4	1	94	11 24 773 5	AGGREGAT HYDR
DOPPELWIRKZYL	10099173	2	2	528	10 51 959 1	VERROHRUNG HYDR
DOPPELWIRKZYL	10227855	1	2	661	10 51 971 2	SELBSTVERLADESYSTEM H
DOPPELWIRKZYL	513313914	10	2	20	11 29 618 6	OW HYDR
DOPPELWIRKZYL	513314114	13	4	446	11 89 300 5	VERROHRUNG HYDR
DOPPELWIRKZYL	592000814	3	1	702	10 51 728 1	VERROHRUNG HYDR
DOPPELWIRKZYL	592104114	2	2	85	10 51 969 5	A-BOCK AUFRICHTZYL HYDR
DOPPELWIRKZYL	592104214	2	1	668	10 51 973 8	SELBSTVERLADESYSTEM H

Bezeichnung	Artikel	Pos.	Menge	Blatt	Baugruppe	Bezeichnung
DREHDURCHFUEHRUNG HYD	10550970	2	1	446	11 89 300 5	VERROHRUNG HYDR
DREHGELENK	10529080	14	1	699	10 58 064 7	VIDEOUEBERWACHUNGSANL
DREHKNOPF	10687925	80	1	410	10 03 610 7	TASTATUR BEDIENPULT X11
DREHRIEGEL KPL	10020161	6	2	321	10 57 883 5	TUER
DREHRIEGEL KPL	10020161	12	2	323	10 57 897 6	TUER
DREHRIEGEL KPL	10020161	9	1	325	10 57 940 0	TUER
DREHRIEGEL KPL	10020161	9	2	326	10 56 623 7	TUER
DREHRIEGEL KPL	10020161	12	2	327	10 56 580 8	TUER
DREHSCHLOSS	592285814	4	1	423	10 35 007 6	SCHIEBETUER
DREHSTROMGENERATOR	10148088	1	1	295	10 14 584 5	GENERATOR VORM.
DREHWERKANTRIEB	90013762	10	2	382	10 51 968 2	DW OW
DREHWINKELMESSUMFORME	10528626	31	1	712	10 52 952 2	DW GEBER NRS
DREHZAHLGEBER KPL.	10133077	20	2	306	10 14 297 7	MOTORREGELUNGSENSORIK
DROSSELKOERPER	11253687	2	1	94	11 24 773 5	AGGREGAT HYDR
DROSSELKOERPER	11253689	26	2	94	11 24 773 5	AGGREGAT HYDR
DROSSELKOERPER	11930190	11	1	8	11 92 958 8	LUFTFUEHRUNG KPL
DROSSELKOERPER	917906414	3	1	690	10 55 459 4	VERROHRUNG HYDR
DROSSELKOERPER	917906414	4	1	702	10 51 728 1	VERROHRUNG HYDR
DROSSELKOERPER	929796914	6	1	620	10 51 726 2	VERROHRUNG HYDR
DROSSELKOERPER	946293614	9	1	20	11 29 618 6	OW HYDR
DROSSELKOERPER	991487414	26	1	20	11 29 618 6	OW HYDR
DROSSELKOERPER	991867414	37	1	20	11 29 618 6	OW HYDR
DROSSELRUECKSCHLAGVEN	11233730	4	1	87	10 22 540 8	VENTILBLOCK
DROSSELRUECKSCHLAGVEN	7623541	204	1	30	11 28 647 6	VENTILBLOCK
DROSSELSCHRAUBE	7615603	8	1	455	11 22 473 8	VERSTELLUNG
DROSSELSCHRAUBE	7615604	9	1	455	11 22 473 8	VERSTELLUNG
DROSSELVENTIL	510497214	33	1	94	11 24 773 5	AGGREGAT HYDR
DROSSELVENTIL	592070714	145	2	30	11 28 647 6	VENTILBLOCK
DROSSELVENTIL	592178314	5	1	668	10 51 973 8	SELBSTVERLADESYSTEM H
DRUCKABSCHNEIDUNG	9278875	1	1	124	10 11 836 7	RS DRUCKABSCHNEIDUNG
DRUCKAUFNEHMER	10515473	66	2	46	11 24 519 0	OW EL
DRUCKAUFNEHMER	11219179	65	2	46	11 24 519 0	OW EL
DRUCKBEGRENZUNGSPATR	592309014	200	1	30	11 28 647 6	VENTILBLOCK
DRUCKBEGRENZUNGSPATR	592309014	205	1	30	11 28 647 6	VENTILBLOCK
DRUCKBEGRENZUNGSVENTI	10350546	2	1	87	10 22 540 8	VENTILBLOCK
DRUCKBEGRENZUNGSVENTI	10593474	3	1	104	11 21 991 0	PUMPENGEHAEUSE
DRUCKBEGRENZUNGSVENTI	10872307	9	1	8	11 92 958 8	LUFTFUEHRUNG KPL
DRUCKBEGRENZUNGSVENTI	11219368	2	1	104	11 21 991 0	PUMPENGEHAEUSE
DRUCKBEGRENZUNGSVENTI	11233731	5	1	87	10 22 540 8	VENTILBLOCK
DRUCKBEGRENZUNGSVENTI	11233731	6	1	87	10 22 540 8	VENTILBLOCK
DRUCKBEGRENZUNGSVENTI	11233731	2	1	530	59 20 224 14	LASTHALTEVENTIL
DRUCKBEGRENZUNGSVENTI	11293250	3	2	38	59 21 458 14	VENTILBLOCK
DRUCKBEGRENZUNGSVENTI	511414514	18	1	94	11 24 773 5	AGGREGAT HYDR
DRUCKBEGRENZUNGSVENTI	511467914	4	1	620	10 51 726 2	VERROHRUNG HYDR
DRUCKBEGRENZUNGSVENTI	511475514	7	1	528	10 51 959 1	VERROHRUNG HYDR
DRUCKBEGRENZUNGSVENTI	511486714	20	1	532	51 14 755 14	DRUCKBEGRENZUNGSVENTI
DRUCKBEGRENZUNGSVENTI	511619614	50	2	346	51 22 527 14	OELMOTOR
DRUCKBEGRENZUNGSVENTI	511639714	50	2	363	51 22 942 14	OELMOTOR
DRUCKBEGRENZUNGSVENTI	511655114	50	2	455	11 22 473 8	VERSTELLUNG
DRUCKBEGRENZUNGSVENTI	592323114	5	4	446	11 89 300 5	VERROHRUNG HYDR
DRUCKEINSPEISEVENTIL	10123236	2	2	152	10 14 131 7	RS ANSCHLUSSPLATTE
DRUCKEINSPEISEVENTIL	10135472	10	1	142	10 12 942 0	DRUCKREDUZIERVENTIL
DRUCKEINSPEISEVENTIL	11835951	182	12	30	11 28 647 6	VENTILBLOCK
DRUCKFEDER	10007967	7	1	453	10 00 794 7	TRIEBWERK HYDRAULIKTEIL
DRUCKFEDER	10115224	6	1	455	11 22 473 8	VERSTELLUNG
DRUCKFEDER	10129501	4	1	253	10 15 259 2	UEBERDRUCKVENTIL
DRUCKFEDER	10296909	133	14	30	11 28 647 6	VENTILBLOCK
DRUCKFEDER	10349778	132	1	30	11 28 647 6	VENTILBLOCK
DRUCKFEDER	10529089	17	1	699	10 58 064 7	VIDEOUEBERWACHUNGSANL
DRUCKFEDER	11118160	6	1	229	10 13 845 0	ENDREGELVENTIL

Bezeichnung	Artikel	Pos.	Menge	Blatt	Baugruppe	Bezeichnung
DRUCKFEDER	11226019	40	1	387	51 14 347 14	DW SICHERUNGSBLOCK
DRUCKFEDER	11267416	6	1	107	10 59 347 4	DRUCKBEGRENZUNGSVENTI
DRUCKFEDER	11267442	5	1	109	11 06 730 4	ABSCHALTVENTIL
DRUCKFEDER	11305568	75	16	380	99 04 645 14	ANTRIEB
DRUCKFEDER	11305579	76	16	380	99 04 645 14	ANTRIEB
DRUCKFEDER	11940199	7	1	390	11 94 017 6	TRIEBWERK HYDRAULIKTEIL
DRUCKFEDER	7000942	164	7	30	11 28 647 6	VENTILBLOCK
DRUCKFEDER	7024503	171	14	30	11 28 647 6	VENTILBLOCK
DRUCKFEDER	7028143	5	1	107	10 59 347 4	DRUCKBEGRENZUNGSVENTI
DRUCKFEDER	720046001	7	22	397	50 20 383 01	LAMELLENBREMSE
DRUCKFEDER	720046101	8	12	397	50 20 383 01	LAMELLENBREMSE
DRUCKFEDER	7381699	30	21	147	10 13 802 6	RS ZYL.+STEUERPL.+WELLE
DRUCKFEDER	7382167	31	24	130	98 89 984	RS TRIEBWERK
DRUCKFEDER	7382167	31	24	133	98 89 983	RS TRIEBWERK
DRUCKFEDER	9266088	14	1	125	92 78 875	DRUCKABSCHNEIDUNG
DRUCKFEDER	9267342	12	1	118	92 67 343	ENTLUEFTUNGSVENTIL
DRUCKFEDER	9886756	7	1	252	10 12 948 0	OELKUEHLER VORM.
DRUCKFILTER	10223581	19	1	94	11 24 773 5	AGGREGAT HYDR
DRUCKGEBER	9076531	10	2	306	10 14 297 7	MOTORREGELUNGSENSORIK
DRUCKGEBER KPL.	9076550	11	1	306	10 14 297 7	MOTORREGELUNGSENSORIK
DRUCKREDUZIERVENTIL	10129420	9	2	141	11 36 218 7	REGELVENTIL
DRUCKREDUZIERVENTIL	510438514	4	2	446	11 89 300 5	VERROHRUNG HYDR
DRUCKREDUZIERVENTIL	511476914	3	1	345	10 51 969 8	NADELEINZIEHWINDE HYDR
DRUCKREDUZIERVENTIL	511476914	4	1	362	10 51 968 7	HAUPT EZW HYDR
DRUCKREGELVENTIL	10115241	49	1	455	11 22 473 8	VERSTELLUNG
DRUCKROHRSTUTZEN	10131081	1	1	264	10 13 508 0	DRUCKROHRSTUTZEN
DRUCKROHRSTUTZEN	10135080	1	1	263	10 14 114 0	RS DRUCKROHRSTUTZEN
DRUCKROHRSTUTZEN	10153151	191	6	223	12 42 545 4	DIESELMOTOR
DRUCKSCHALTER	10352111	16	1	60	10 56 070 1	TANK HYDR KPL
DRUCKSCHALTER	11236712	5	1	706	11 21 750 0	VERFLUESSIGER
DRUCKSCHALTER	11903869	3	1	709	10 56 536 7	MAGNETVENTIL EINBAUSATZ
DRUCKSCHALTER EINSCHAL	10352119	12	1	486	11 26 260 6	WINDE 1 HYDR
DRUCKSCHALTER EINSCHAL	10352119	12	1	501	11 26 261 1	WINDE 2 HYDR
DRUCKSTIFT	10101458	9	3	170	10 32 489 2	TRIEBWERK
DRUCKSTUECK M12X26 X8C	790550914	15	1	321	10 57 883 5	TUER
DRUCKSTUECK M12X26 X8C	790550914	13	1	323	10 57 897 6	TUER
DRUCKSTUECK M12X26 X8C	790550914	4	1	325	10 57 940 0	TUER
DRUCKSTUECK M12X26 X8C	790550914	4	1	326	10 56 623 7	TUER
DRUCKSTUECK M12X26 X8C	790550914	13	1	327	10 56 580 8	TUER
DRUCKTASTER	693003414	32	1	724	10 52 155 9	MODUL BETANKUNGSANLAG
DRUCKVENTIL	11229183	5	1	34	10 35 148 6	VENTILBLOCK
DRUCKVENTIL	11229185	9	1	34	10 35 148 6	VENTILBLOCK
DS	10423993	900	1	37	10 59 143 5	WEGEVENTIL
DS	10524595	1	1	34	10 35 148 6	VENTILBLOCK
DS	11219356	4	1	100	11 21 990 2	TRIEBWERK
DS	11896178	900	1	449	10 55 097 0	DREHDURCHFUEHRUNG HYD
DS	511493914	51	2	346	51 22 527 14	OELMOTOR
DS	511614214	61	1	363	51 22 942 14	OELMOTOR
DS	512259414	990	1	346	51 22 527 14	OELMOTOR
DS	512259514	61	1	346	51 22 527 14	OELMOTOR
DS	512401514	51	2	363	51 22 942 14	OELMOTOR
DS	512714614	10	1	397	50 20 383 01	LAMELLENBREMSE
DS	512714614	9	1	400	93 93 479 01	BREMSE DS
DS	512714714	11	1	397	50 20 383 01	LAMELLENBREMSE
DS	512714714	10	1	400	93 93 479 01	BREMSE DS
DS	790413614	990	1	33	59 23 090 14	DRUCKBEGRENZUNGSPATR
DS	790545514	900	1	31	59 20 707 14	DROSSELVENTIL
DS	790545514	900	1	32	59 23 006 14	MAGNETVENTIL
DS ANSCHLUSSGEHAEUSE	9274731	91	1	117	10 11 835 0	ANSCHLUSSGEHAEUSE
DS ANSCHLUSSPLATTE	10138034	3	1	158	10 13 803 3	DICHTSATZ KPL.

Bezeichnung	Artikel	Pos.	Menge	Blatt	Baugruppe	Bezeichnung
DS ANTRIEBSWELLE	512416214	98	1	452	10 50 351 3	TRIEBWERK
DS DOPPELPUMPE	9276408	98	1	116	10 11 834 9	DOPPELV.PUMPE
DS DRUCKREDUZIERVENTIL	10123210	4	2	159	10 13 803 4	DS ANSCHLUSSPLATTE
DS DRUCKREDUZIERVENTIL	10123214	90	1	142	10 12 942 0	DRUCKREDUZIERVENTIL
DS DRUCKROHRSTUTZEN	10141216	210	1	262	10 15 315 1	DRUCKROHRSTUTZEN
DS DRUCKROHRSTUTZEN	10141216	12	1	263	10 14 114 0	RS DRUCKROHRSTUTZEN
DS DRUCKVENTIL	10332095	90	1	155	10 12 323 6	DRUCKEINSPEISEVENTIL
DS DRUCKVENTIL	10332095	2	2	159	10 13 803 4	DS ANSCHLUSSPLATTE
DS HOCHDRUCKPUMPE	10152787	210	1	258	10 15 085 7	HOCHDRUCKPUMPE MIT BEFE
DS HOCHDRUCKPUMPE	10152787	4	1	259	10 15 074 3	RS HOCHDRUCKPUMPE
DS INJEKTOR	10141215	210	1	261	10 15 286 7	INJEKTOR MIT BEFEST.
DS KPL	10224159	3	1	183	10 22 358 1	DRUCKFILTER
DS KPL	10351610	99	1	166	10 22 650 5	V.PUMPE
DS KPL	10595126	200	1	365	10 55 156 3	WINDE
DS KPL	11904703	900	1	686	59 21 826 14	ABSTUETZZYLINDER
DS KPL	502050814	990	1	199	51 22 501 14	OELMOTOR
DS KPL	502050814	990	1	204	51 22 394 14	OELMOTOR
DS KPL	512256614	250	1	387	51 14 347 14	DW SICHERUNGSBLOCK
DS KPL	512299214	990	1	388	51 22 991 14	OELMOTOR
DS KPL	790579414	902	1	30	11 28 647 6	VENTILBLOCK
DS KPL	981967114	990	1	621	51 02 322 14	OELMOTOR
DS KPL ZYL	10352446	900	1	529	10 09 917 3	DOPPELWIRKZYL
DS KPL ZYL	10352447	1	1	662	10 22 785 5	DOPPELWIRKZYL
DS KPL ZYL	513319014	99	1	460	51 33 141 14	DOPPELWIRKZYL
DS KPL ZYL	513319214	99	1	39	51 33 139 14	DOPPELWIRKZYL
DS KPL ZYL	790230614	900	1	703	59 20 008 14	DOPPELWIRKZYL
DS KPL ZYL	790353914	990	1	716	51 03 361 14	EINFACHWIRKZYL
DS KPL ZYL	790407714	900	1	86	59 21 041 14	DOPPELWIRKZYL
DS KPL ZYL	790407814	900	1	669	59 21 042 14	DOPPELWIRKZYL
DS MONOBLOCK	10349716	901	1	30	11 28 647 6	VENTILBLOCK
DS MONOBLOCK	10349776	900	1	30	11 28 647 6	VENTILBLOCK
DS REGELVENTIL	10122265	4	1	158	10 13 803 3	DICHTSATZ KPL.
DS REGELVENTIL	9273644	89	1	115	10 11 834 9	DOPPELV.PUMPE
DS REGELVENTIL	9273644	90	1	121	90 74 418	REGELVENTIL
DS ZAHNRADMOTOR	10493890	901	1	44	55 09 453 14	OELMOTOR
DSF-RING	10146358	5	1	243	10 14 636 7	KOLBEN KPL.
DUESE	11226142	200	1	387	51 14 347 14	DW SICHERUNGSBLOCK
DUESE	11233732	7	1	87	10 22 540 8	VENTILBLOCK
DUESE	11239895	3	1	673	59 21 584 14	SENKBREMSVENTIL
DUESE	11249191	270	1	86	59 21 041 14	DOPPELWIRKZYL
DUESE	7014257	271	1	30	11 28 647 6	VENTILBLOCK
DUESE	7026135	269	2	30	11 28 647 6	VENTILBLOCK
DUESENHALTER	592289414	53	1	419	10 35 008 0	KABINE
DURCHFUEHRUNGSTUELLE	11225402	63	2	315	11 24 409 0	VERKLEIDUNG OW EINBAU KP
DURCHGANGSVENTIL	7402781	12	1	212	11 24 114 4	KRAFTSTOFFANLAGE
DURCHTRIEB	10129874	12	1	94	11 24 773 5	AGGREGAT HYDR
DURCHTRIEB	10129874	300	1	139	10 12 878 7	V.PUMPE
DURCHTRIEB	10130005	301	1	139	10 12 878 7	V.PUMPE
DURCHTRIEB	10134521	304	1	139	10 12 878 7	V.PUMPE
DURCHTRIEB	10138068	305	1	140	10 12 878 7	V.PUMPE
DURCHTRIEB	10553922	11	1	94	11 24 773 5	AGGREGAT HYDR
DW GEBER NRS	10522930	828	1	4	01 38 376 14	LR 1300 SX
DW GEBER NRS	10529522	3	1	711	10 52 293 0	DW GEBER NRS
DW HYDR	10519683	2	1	382	10 51 968 2	DW OW
DW OW	10519682	27	1	2	01 38 376 14	LR 1300 SX
DW SICHERUNGSBLOCK	511434714	2	1	385	10 55 216 1	VERROHRUNG HYDR
E-BAUGRUPPE	10688831	31	1	613	11 90 722 6	MODEM NRS
EINBAUVENTIL	511640714	2	1	181	51 16 377 14	VENTILBLOCKSPEISEDRUCK
EINFACHHAKEN	10522845	1	1	599	79 03 862 14	LASTHAKEN
EINFACHHAKEN	11481162	1	1	604	11 27 463 8	AUFHAENGUNG

Bezeichnung	Artikel	Pos.	Menge	Blatt	Baugruppe	Bezeichnung
EINFACHWIRKZYL	510336114	1	1	715	10 56 173 5	VERROHRUNG HYDR
EINFUELLSIEB	10296919	13	1	65	10 56 073 3	KRAFTSTOFFTANK KPL
EINFUELLSTUTZEN	944215103	1	1	398	92 76 934 01	OELEINFUELLSTUTZEN
EINGANGSMODUL	10144034	10	1	309	11 40 371 1	SCR KPL.
EINSPRITZLEITUNG	10143827	2	4	271	10 14 382 8	EINSPRITZLEITUNGEN
EINSPRITZLEITUNG	10143829	1	1	271	10 14 382 8	EINSPRITZLEITUNGEN
EINSPRITZLEITUNG	10143831	4	1	271	10 14 382 8	EINSPRITZLEITUNGEN
EINSPRITZLEITUNGEN	10143828	215	1	224	12 42 545 4	DIESELMOTOR
EINSTECKDUESE	511464114	30	1	715	10 56 173 5	VERROHRUNG HYDR
EINSTECKHUELSE	10871759	25	1	8	11 92 958 8	LUFTFUEHRUNG KPL
EINSTECKHUELSE	10871759	21	6	217	11 24 114 5	ANLAGE HARNSTOFF EINBAU
EINSTELLMUTTER	944403703	8	1	471	96 93 178 01	FAHRANTRIEB
EINSTELLSCHRAUBE	10599567	6	1	109	11 06 730 4	ABSCHALTVENTIL
EINSTELLSCHRAUBE M10X1	10012225	5	2	246	11 44 800 5	KIPPHEBELBOCK VORM.
EINZELADERABDICHTUNG	605620008	14	3	417	11 95 272 6	SCHALLGEBER EL
ENDGEHAEUSE	540271614	2	1	626	54 02 702 14	SEILTROMMEL KPL
ENDGEHAEUSE	692406008	11	1	417	11 95 272 6	SCHALLGEBER EL
ENDGEHAEUSE	692406008	12	1	417	11 95 272 6	SCHALLGEBER EL
ENDPOL KAPPE	11229635	30	3	45	11 24 519 0	OW EL
ENDREGELVENTIL	10138450	14	1	223	12 42 545 4	DIESELMOTOR
ENDSCHALTER	11921102	17	1	61	10 52 673 3	ABSPERRORGAN
ENDSCHALTER EINBAU	11310932	46	1	18	11 24 047 9	OW KPL
ENDSCHALTER HUB OBEN	927521808	36	1	595	97 14 959 03	SPITZENENDSCHALTER EL
ENDSCHEIBE EL	939556301	9	1	350	93 88 500 01	SEILTROMMEL
ENDSCHEIBE UL	938850201	5	1	350	93 88 500 01	SEILTROMMEL
ENDWINKEL	602720514	28	4	51	10 56 645 8	KLEMMKASTEN
ENTLUEFTUNGSFILTER	505104914	260	1	98	11 24 682 0	VERTEILERGETRIEBE
ENTLUEFTUNGSFILTER	693113814	485	1	98	11 24 682 0	VERTEILERGETRIEBE
ENTLUEFTUNGSSCHRAUBE	485581914	54	1	51	10 56 645 8	KLEMMKASTEN
ENTLUEFTUNGSSCHRAUBE	7412942	1	1	215	10 30 300 7	KRAFTSTOFFVORFILTER
ENTLUEFTUNGSSTUTZEN	927501901	13	1	356	93 36 755 01	OELMESSEINRICHTUNG
ENTLUEFTUNGSVENTIL		82	1	352	93 88 497 01	PLANETENGETRIEBE
ENTLUEFTUNGSVENTIL	10351239	205	2	686	59 21 826 14	ABSTUETZZYLINDER
ENTLUEFTUNGSVENTIL	540136314	3	4	85	10 51 969 5	A-BOCK AUFRICHTZYL HYDR
ENTLUEFTUNGSVENTIL	592089814	69	1	380	99 04 645 14	ANTRIEB
ENTLUEFTUNGSVENTIL	9267343	6	2	117	10 11 835 0	ANSCHLUSSGEHAEUSE
ENTNAHMEMODUL	10146538	6	1	219	11 24 240 8	HARNSTOFFBEHAELTER
ENTWAESSERUNGSSTOPFEN	602501208	55	1	51	10 56 645 8	KLEMMKASTEN
ENTWAESSERUNGSVENTIL	502921908	10	1	8	11 92 958 8	LUFTFUEHRUNG KPL
ERSATZELEMENT	10136801	1	1	233	10 13 680 0	KURBELGEHAEUSEENTLUEFT
EXPANSIONSVENTIL	10223210	170	1	432	11 93 934 6	KLIMAANLAGE
EXZENTERSCHRAUBE	11267405	46	1	106	11 21 993 0	PUMPENGEHAEUSE
EZW OW EINBAU KPL	10519686	1	1	359	10 51 969 1	EZW OW EINBAU KPL
EZW OW EINBAU KPL	10519691	25	1	2	01 38 376 14	LR 1300 SX
EZW ROLLENPAKET	992925814	11	1	361	10 51 968 6	EZW OW EINBAU KPL
FAECHERSCHEIBE DIN 6798 1	425221314	9	1	47	10 53 048 9	SICHERUNGSHALTER
FAECHERSCHEIBE DIN 6798 1	425221314	16	4	343	10 51 969 7	NADELEINZIEHWINDE
FAHRANTRIEB	969317801	6	1	467	11 89 365 0	RAUPENTRAEGER RE KPL
FAHRANTRIEB	969317801	6	1	478	11 89 365 1	RAUPENTRAEGER LI KPL
FAHRERSITZ	10225068	11	1	402	11 27 970 6	KABINE KPL
FALTENBALG	10100666	40	1	434	10 22 506 8	FAHRERSITZ
FALTENBALG	606272314	1	1	409	11 21 481 8	MEISTERSCHALTER
FALTENBALG	7366620	42	1	434	10 22 506 8	FAHRERSITZ
FANGSTANGE NRS	11271097	580	1	3	01 38 376 14	LR 1300 SX
FEDER	10287741	6	1	179	10 28 766 5	VERSTELLTEIL
FEDER	10324860	7	1	170	10 32 489 2	TRIEBWERK
FEDERDRUCKLAMELLENBRE		70	1	352	93 88 497 01	PLANETENGETRIEBE
FEDERDRUCKLAMELLENBRE	502037201	80	1	471	96 93 178 01	FAHRANTRIEB
FEDERELEMENT	10032001	7	1	215	10 30 300 7	KRAFTSTOFFVORFILTER
FEDERRING DIN 7980 12 FST	4980013	25	16	115	10 11 834 9	DOPPELV.PUMPE

Bezeichnung	Artikel	Pos.	Menge	Blatt	Baugruppe	Bezeichnung
FEDERSCHEIBE DIN 137 X10	10411092	4	1	297	11 38 664 5	STARTER
FEDERSCHEIBE DIN 137 X10	10411093	6	2	297	11 38 664 5	STARTER
FEDERSTECKER	592291714	3	1	429	59 22 914 14	PODESTSICHERUNG KPL
FEDERSTECKER DIN 11024 2.	433206014	14	1	591	99 30 800 14	SPITZENENDSCHALTER EINBA
FEDERSTECKER DIN 11024 2.	433206014	48	1	593	99 48 521 14	SPITZEN AL KPL
FEDERSTECKER DIN 11024 2.	433206014	51	8	633	10 55 372 1	DACHGELAENDER NRS
FEDERSTECKER DIN 11024 4	433206214	33	2	510	11 23 820 3	ANLENKSTUECK KPL
FEDERSTECKER DIN 11024 4	433206214	52	10	633	10 55 372 1	DACHGELAENDER NRS
FEDERSTECKER DIN 11024 5	433206314	21	6	341	99 29 803 14	VERZURRUNG BALLAST
FEDERSTECKER DIN 11024 5	433206314	31	2	640	99 10 116 14	SEILFUEHRUNG
FEDERTELLER	11267441	4	2	109	11 06 730 4	ABSCHALTVENTIL
FEDERTELLER	570114908	116	1	621	51 02 322 14	OELMOTOR
FEDERTELLER	790579314	131	15	30	11 28 647 6	VENTILBLOCK
FEDERTELLER	9076178	12	2	157	10 12 226 2	RS VERSTELLUNG
FEDERTELLER	9278876	13	1	125	92 78 875	DRUCKABSCHNEIDUNG
FESTSTELLER	592291014	94	1	420	10 35 008 0	KABINE
FETT	10282622	100	1	254	10 13 394 5	SCHMIEROELPUMPE
FETT	10282622	100	1	299	10 11 557 7	SCHWUNGRADGEHAEUSE AN
FETT	10282622	100	1	302	10 12 797 9	VERSCHLUSSTEILE
FETT	10285708	100	1	12	11 41 737 0	LUFTPRESSER
FETT	10285708	100	1	227	10 15 445 8	ZYLINDER
FETT	10285708	100	1	228	10 14 768 6	AGGREGATETRAEGER ANBA
FETT	10285708	100	1	255	10 13 394 7	ABSAUGPUMPE MIT BEFEST.
FETT	10285708	100	1	274	10 14 736 9	ANSAUGSTUTZEN ANBAU
FETT	10285708	100	1	275	10 14 736 4	LUFTANSAUGUNG ANBAU
FETT	10285708	100	1	276	10 14 967 6	VERBINDUNGSLEITUNG ANBA
FETT	10285708	100	1	283	10 14 273 4	WASSERPUMPE MIT BEFEST.
FETT	10285708	100	1	284	10 14 821 5	THERMOSTATGEHAEUSE AN
FETT	10285708	100	1	286	10 14 274 2	KUEHLMITTELKRUEMMER AN
FETT	10285708	100	1	288	10 14 601 2	WASSERSAMMELLEITUNG K
FETT	10285708	100	1	307	10 14 637 4	VERSCHLUSSTEILE
FEUCHTESENSOR	10141261	15	1	217	11 24 114 5	ANLAGE HARNSTOFF EINBAU
FEUERLOESCHER	890100814	10	1	75	92 65 477 14	FEUERLOESCHER NRS
FEUERLOESCHER EINBAU	10578845	31	2	18	11 24 047 9	OW KPL
FEUERLOESCHER NRS	926547714	10	1	74	10 57 884 5	FEUERLOESCHER EINBAU
FILTER	11490265	38	1	106	11 21 993 0	PUMPENGEHAEUSE
FILTER	11490265	39	1	106	11 21 993 0	PUMPENGEHAEUSE
FILTER	11490265	40	1	106	11 21 993 0	PUMPENGEHAEUSE
FILTER	592293714	240	2	432	11 93 934 6	KLIMAANLAGE
FILTEREINSATZ	10037623	1	1	183	10 22 358 1	DRUCKFILTER
FILTEREINSATZ	11227203	1	1	62	10 51 572 4	RUECKLAUFFILTER
FILTERELEMENT	11291031	1	1	209	11 24 679 0	LUFTFILTER
FILTERELEMENT	510713814	1	1	63	51 06 906 14	BELUEFTUNGSFILTER
FILTERELEMENT	553183708	6	1	215	10 30 300 7	KRAFTSTOFFVORFILTER
FILTERKONSOLE	12455374	1	1	268	10 14 675 3	KRAFTSTOFFFEINFILTER
FILTERLUEFTER EINBAU	611052614	61	1	403	11 27 973 6	KABINE EL
FILTERMATTE	611124514	1	1	416	61 10 526 14	FILTERLUEFTER EINBAU
FILZSTREIFEN	10585445	12	2	626	54 02 702 14	SEILTROMMEL KPL
FLACHDICHTRING	10588725	4	1	530	59 20 224 14	LASTHALTEVENTIL
FLACHDICHTUNG	9276860	37	2	115	10 11 834 9	DOPPELV.PUMPE
FLACHDICHTUNG	9276860	37	2	138	92 76 408	DS DOPPELPUMPE
FLACHKAEFIG	501532014	9	1	626	54 02 702 14	SEILTROMMEL KPL
FLACHKOPFSCHRAUBE	11940203	12	7	390	11 94 017 6	TRIEBWERK HYDRAULIKTEIL
FLACHKOPFSCHRAUBE ISO 7	10541536	19	20	402	11 27 970 6	KABINE KPL
FLACHKOPFSCHRAUBE ISO 70	10541540	4	11	437	11 26 095 6	STEUERKONSOLE RE KPL
FLACHKOPFSCHRAUBE ISO 7	10541561	28	16	402	11 27 970 6	KABINE KPL
FLACHKOPFSCHRAUBE ISO 7	10541561	6	3	438	97 07 857 03	LIBELLE EINBAU
FLACHKOPFSCHRAUBE ISO 7	400180214	35	8	402	11 27 970 6	KABINE KPL
FLACHKOPFSCHRAUBE ISO 7	400180214	30	4	411	10 53 171 8	TASTATUR
FLACHKOPFSCHRAUBE ISO 7	10541563	16	2	720	10 52 155 4	BETANKUNGSANLAGE NRS

Bezeichnung	Artikel	Pos.	Menge	Blatt	Baugruppe	Bezeichnung
FLACHKOPFSCHRAUBE ISO 7	10541565	19	2	720	10 52 155 4	BETANKUNGSANLAGE NRS
FLACHKOPFSCHRAUBE ISO 7	400180314	36	15	402	11 27 970 6	KABINE KPL
FLACHKUPFER EL	10530486	6	1	47	10 53 048 9	SICHERUNGSHALTER
FLACHRUNDSCHRAUBE DIN	11314349	11	3	543	11 23 749 8	AUFLAGE KPL
FLACHRUNDSCHRAUBE DIN	11314349	14	3	562	11 23 290 7	AUFLAGE KPL
FLACHRUNDSCHRAUBE DIN	11314349	14	6	563	11 23 292 2	AUFLAGE KPL
FLACHRUNDSCHRAUBE DIN	11314349	14	4	597	11 25 204 2	AUFLAGE KPL
FLACHSICHERUNGSEINSATZ	604105314	68	5	406	10 55 963 5	SCHALTSCHR X1
FLACHSICHERUNGSEINSATZ	604105314	5	5	407	99 20 811 14	RESERVESICHERUNGEN
FLACHSICHERUNGSEINSATZ	604105414	7	5	407	99 20 811 14	RESERVESICHERUNGEN
FLACHSICHERUNGSEINSATZ	604105514	69	41	406	10 55 963 5	SCHALTSCHR X1
FLACHSICHERUNGSEINSATZ	604105514	10	10	407	99 20 811 14	RESERVESICHERUNGEN
FLACHSICHERUNGSEINSATZ	604105614	70	6	406	10 55 963 5	SCHALTSCHR X1
FLACHSICHERUNGSEINSATZ	604105614	15	5	407	99 20 811 14	RESERVESICHERUNGEN
FLACHSTECKER	602203914	55	6	403	11 27 973 6	KABINE EL
FLACHSTECKER	602203914	92	6	404	11 27 973 6	KABINE EL
FLACHSTECKER	602203914	71	2	725	10 52 155 9	MODUL BETANKUNGSANLAG
FLACHSTECKERGEHAEUSE	602208714	92	1	406	10 55 963 5	SCHALTSCHR X1
FLACHSTECKERGEHAEUSE	602209014	91	1	404	11 27 973 6	KABINE EL
FLACHSTECKERGEHAEUSE	602305914	54	3	403	11 27 973 6	KABINE EL
FLACHSTECKERGEHAEUSE	602305914	70	1	725	10 52 155 9	MODUL BETANKUNGSANLAG
FLAECHENDICHTUNG	10354595	100	1	234	10 14 844 4	OELWANNE MIT BEFEST.
FLANSCH	10583864	1	1	365	10 55 156 3	WINDE
FLANSCH	540271814	1	1	627	54 02 703 14	FLANSCH KPL
FLANSCH	552066514	22	2	60	10 56 070 1	TANK HYDR KPL
FLANSCH	9072435	12	1	127	90 77 464	RS FLANSCH
FLANSCH	944137814	24	1	94	11 24 773 5	AGGREGAT HYDR
FLANSCH	944813514	25	1	94	11 24 773 5	AGGREGAT HYDR
FLANSCH	956274314	28	4	20	11 29 618 6	OW HYDR
FLANSCH	959712714	21	1	711	10 52 293 0	DW GEBER NRS
FLANSCH KPL	540270314	22	1	624	59 20 694 14	WINDE
FLANSCHABDECKUNG	11215698	2	1	175	10 22 601 3	V.PUMPE
FLANSCHABDECKUNG	11215699	3	1	175	10 22 601 3	V.PUMPE
FLANSCHHAELFTE	510548714	105	8	22	11 29 618 6	OW HYDR
FLANSCHHAELFTE	510574414	100	8	22	11 29 618 6	OW HYDR
FLANSCHHAELFTE	510574414	21	2	191	10 57 532 2	ANSAUGROHR OEL KPL
FLANSCHHAELFTE	510586614	103	12	22	11 29 618 6	OW HYDR
FLANSCHHAELFTE	510586614	617	4	362	10 51 968 7	HAUPT EZW HYDR
FLANSCHHAELFTE	510586614	646	16	448	11 89 300 5	VERROHRUNG HYDR
FLANSCHHAELFTE	510586614	730	8	486	11 26 260 6	WINDE 1 HYDR
FLANSCHHAELFTE	510586614	730	8	501	11 26 261 1	WINDE 2 HYDR
FLANSCHHAELFTE	510586914	104	18	22	11 29 618 6	OW HYDR
FLANSCHHAELFTE	510586914	620	4	345	10 51 969 8	NADELEINZIEHWINDE HYDR
FLANSCHHAELFTE	510586914	630	4	385	10 55 216 1	VERROHRUNG HYDR
FLANSCHHAELFTE	510587514	101	8	22	11 29 618 6	OW HYDR
FLANSCHHAELFTE	510587514	312	2	95	11 24 773 5	AGGREGAT HYDR
FLANSCHHAELFTE	510587514	631	8	385	10 55 216 1	VERROHRUNG HYDR
FLANSCHHAELFTE	510587514	650	2	528	10 51 959 1	VERROHRUNG HYDR
FLANSCHHAELFTE	510587514	614	2	668	10 51 973 8	SELBSTVERLADESYSTEM H
FLANSCHHAELFTE	511502414	102	24	22	11 29 618 6	OW HYDR
FLANSCHHAELFTE	511502414	310	6	95	11 24 773 5	AGGREGAT HYDR
FLANSCHHAELFTE	511502414	20	6	191	10 57 532 2	ANSAUGROHR OEL KPL
FLANSCHHAELFTE	511598114	22	2	191	10 57 532 2	ANSAUGROHR OEL KPL
FLANSCHLAGER	11231270	3	1	489	10 53 039 8	WINDE
FLANSCHVERBINDUNG SAE	790227714	32	1	20	11 29 618 6	OW HYDR
FLUEGELSCHRAUBE DIN 316	485559814	14	2	79	10 56 067 3	BATTERIE EINBAU KPL
FORMSCHLAUCH	10337090	45	1	195	11 24 114 0	KUEHLER EINBAU WASSER
FORMSCHLAUCH	10350439	46	1	195	11 24 114 0	KUEHLER EINBAU WASSER
FORMSCHLAUCH	11246836	15	1	207	11 24 114 2	ANSAUGANLAGE LUFT
FORMSCHLAUCH	11270026	44	1	195	11 24 114 0	KUEHLER EINBAU WASSER

Bezeichnung	Artikel	Pos.	Menge	Blatt	Baugruppe	Bezeichnung
FORMSCHLAUCH	11287796	25	1	195	11 24 114 0	KUEHLER EINBAU WASSER
FORMSCHLAUCH	550936214	94	1	196	11 24 114 0	KUEHLER EINBAU WASSER
FRONTSCHEIBE	592287214	10	1	426	59 22 871 14	FRONTSCHEIBE KPL
FRONTSCHEIBE KPL	592287114	28	1	419	10 35 008 0	KABINE
FRONTSCHEIBE KPL	592288414	34	1	419	10 35 008 0	KABINE
FUEHRUNG	10512821	88	2	420	10 35 008 0	KABINE
FUEHRUNG	11292956	17	1	457	10 44 510 2	SCHNELLVERSCHLUSSKUPPL
FUEHRUNG	919515414	3	1	716	51 03 361 14	EINFACHWIRKZYL
FUEHRUNG KPL	959576314	100	1	421	10 22 645 4	TUERE ZUBEHOEHR
FUEHRUNGSBOLZEN	10572236	1	1	459	10 55 154 8	SCHNELLVERSCHLUSSKUPPL
FUEHRUNGSBOLZEN	10572236	1	2	514	10 55 157 6	SCHNELLVERSCHLUSSKUPPL
FUEHRUNGSBUCHSE 145/10	11310567	40	1	529	10 09 917 3	DOPPELWIRKZYL
FUEHRUNGSBUCHSE M30 X 1.	10352312	35	1	685	59 21 826 14	ABSTUETZZYLINDER
FUEHRUNGSBUCHSE M40 X 1.	10352313	40	1	685	59 21 826 14	ABSTUETZZYLINDER
FUEHRUNGSKONSOLE MITTE	10226458	15	1	422	95 95 763 14	FUEHRUNG KPL
FUEHRUNGSKONSOLE OBEN	10226463	305	1	421	10 22 645 4	TUERE ZUBEHOEHR
FUEHRUNGSKONSOLE UNTE	10226461	228	1	421	10 22 645 4	TUERE ZUBEHOEHR
FUEHRUNGSRING	10351499	120	2	685	59 21 826 14	ABSTUETZZYLINDER
FUEHRUNGSRING	10352344	65	1	685	59 21 826 14	ABSTUETZZYLINDER
FUEHRUNGSRING	10352349	70	2	685	59 21 826 14	ABSTUETZZYLINDER
FUEHRUNGSRING	10352352	75	2	685	59 21 826 14	ABSTUETZZYLINDER
FUEHRUNGSRING	10352354	95	1	685	59 21 826 14	ABSTUETZZYLINDER
FUEHRUNGSRING	11267401	11	2	106	11 21 993 0	PUMPENGEHAEUSE
FUEHRUNGSRING	726206214	100	3	685	59 21 826 14	ABSTUETZZYLINDER
FUEHRUNGSRING	9266680	18	2	119	10 11 835 7	RS ANSCHLUSSGEHAEUSE
FUEHRUNGSRING	9881114	33	2	119	10 11 835 7	RS ANSCHLUSSGEHAEUSE
FUEHRUNGSROHR	9266847	1	1	237	10 14 591 9	OELMESSSTAB MIT ROHR
FUEHRUNGSSCHIENE	10226457	9	1	422	95 95 763 14	FUEHRUNG KPL
FUEHRUNGSSCHIENE	10226459	222	1	421	10 22 645 4	TUERE ZUBEHOEHR
FUEHRUNGSSCHIENE	10226462	300	1	421	10 22 645 4	TUERE ZUBEHOEHR
FUEHRUNGSSCHIENE SCHW	10537682	1	1	581	11 28 629 9	MONTAGETEILE
FUEHRUNGSSCHIENE SCHW	919956014	2	2	581	11 28 629 9	MONTAGETEILE
FUEHRUNGSSCHIENE SCHW	919956114	3	2	581	11 28 629 9	MONTAGETEILE
FUELLANSCHLUSS	10448187	14	1	70	11 27 315 5	ZENTRALSCHMIERUNG
FUSS SCHWK	990954814	31	2	510	11 23 820 3	ANLENKSTUECK KPL
FUSSLEISTE	10585909	20	1	631	10 55 372 1	DACHGELAENDER NRS
FUSSLEISTE	10585910	21	1	631	10 55 372 1	DACHGELAENDER NRS
FUSSLEISTE	10585911	22	1	631	10 55 372 1	DACHGELAENDER NRS
FUSSLEISTE	10585912	23	1	631	10 55 372 1	DACHGELAENDER NRS
FUSSLEISTE	10585913	24	2	631	10 55 372 1	DACHGELAENDER NRS
FUSSLEISTE	10585914	25	1	631	10 55 372 1	DACHGELAENDER NRS
FUSSLEISTE	10585915	26	1	631	10 55 372 1	DACHGELAENDER NRS
FUSSLEISTE	10585916	27	1	631	10 55 372 1	DACHGELAENDER NRS
FUSSLEISTE	10585917	28	1	631	10 55 372 1	DACHGELAENDER NRS
FUSSLEISTE	10585919	30	1	631	10 55 372 1	DACHGELAENDER NRS
FUSSLEISTE	10585920	31	1	631	10 55 372 1	DACHGELAENDER NRS
FUSSLEISTE	10586854	62	1	633	10 55 372 1	DACHGELAENDER NRS
FUSSPEDAL	11219883	1	1	704	11 22 037 2	FUSSPEDAL EL EINBAU
FUSSPEDAL	11223717	210	2	404	11 27 973 6	KABINE EL
FUSSPEDAL EL EINBAU	11220372	723	1	4	01 38 376 14	LR 1300 SX
FUSSPEDAL EL EINBAU	11223691	211	1	404	11 27 973 6	KABINE EL
GABEL	970591503	1	4	643	99 23 420 14	ZWISCHENABSPANNUNG NR
GABEL	990678914	2	4	643	99 23 420 14	ZWISCHENABSPANNUNG NR
GABEL	991012514	2	4	641	99 23 405 14	ZWISCHENABSPANNUNG NR
GABEL	993034714	1	4	641	99 23 405 14	ZWISCHENABSPANNUNG NR
GABEL SCHWK	990678714	1	1	644	99 06 789 14	GABEL
GABEL SCHWK	990678814	2	1	644	99 06 789 14	GABEL
GABEL SCHWK	991011914	40	2	640	99 10 116 14	SEILFUEHRUNG
GABEL SCHWK	991012214	41	2	640	99 10 116 14	SEILFUEHRUNG
GABEL SCHWK	991012214	2	1	642	99 10 125 14	GABEL

Bezeichnung	Artikel	Pos.	Menge	Blatt	Baugruppe	Bezeichnung
GABEL SCHWK	991012614	1	1	642	99 10 125 14	GABEL
GARDEROBEHAKEN	592290014	76	1	420	10 35 008 0	KABINE
GASDRUCKFEDER	10800103	2	1	413	69 31 685 14	SICHERHEITSHEBEL KPL
GASFEDER	592287414	13	1	426	59 22 871 14	FRONTSCHEIBE KPL
GASFEDER	592323514	11	7	317	11 24 409 1	VERKLEIDUNG
GASFEDER	592323514	22	3	329	10 54 591 0	MOTORABDECKUNG
GEGENMUTTER M20X1.5 POL	10530322	93	1	517	11 90 151 1	KABELSATZ 1 ANLENKSTUECK
GEHAEUSE	10447743	1	1	458	10 44 510 1	SCHNELLVERSCHLUSSKUPPL
GEHAEUSE	10447744	1	1	457	10 44 510 2	SCHNELLVERSCHLUSSKUPPL
GEHAEUSE	10447745	1	1	42	10 44 510 5	SCHNELLVERSCHLUSSKUPPL
GEHAEUSE	11239912	1	1	671	51 16 404 14	SENKBREMSVENTIL
GEHAEUSE	11290844	10	1	98	11 24 682 0	VERTEILERGETRIEBE
GEHAEUSE	611039214	21	1	724	10 52 155 9	MODUL BETANKUNGSANLAG
GEHAEUSE GEBOHRT	918975514	21	1	51	10 56 645 8	KLEMMKASTEN
GEHAEUSE KPL	10445126	3	1	513	10 51 826 1	ANLENKSTUECK HYDR
GEHAEUSE KPL	10445127	20	2	446	11 89 300 5	VERROHRUNG HYDR
GELAENDER SCHWK	10559163	18	2	631	10 55 372 1	DACHGELAENDER NRS
GELAENDER SCHWK	10585923	10	1	631	10 55 372 1	DACHGELAENDER NRS
GELAENDER SCHWK	10585924	11	1	631	10 55 372 1	DACHGELAENDER NRS
GELAENDER SCHWK	10585925	12	1	631	10 55 372 1	DACHGELAENDER NRS
GELAENDER SCHWK	10585926	13	1	631	10 55 372 1	DACHGELAENDER NRS
GELAENDERFUSS	10349402	19	10	631	10 55 372 1	DACHGELAENDER NRS
GELENKBANDKONSOLENSC	10355006	23	2	211	11 24 114 3	ABGASANLAGE
GELENKBOLZENSPANNBAND	10530689	23	2	510	11 23 820 3	ANLENKSTUECK KPL
GELENKBOLZENSPANNBAND	10530689	12	4	523	99 34 198 14	SCHILD LIEBHERR
GELENKBOLZENSPANNBAND	10530689	10	1	553	11 28 391 3	BEFESTIGUNGSCHELLE
GELENKBOLZENSPANNBAND	10531873	15	2	510	11 23 820 3	ANLENKSTUECK KPL
GELENKBOLZENSPANNBAND	10531873	16	1	552	11 28 390 8	AL BEGEHUNG
GELENKBOLZENSPANNBAND	10531873	16	1	568	11 28 583 8	AL BEGEHUNG
GELENKBOLZENSPANNBAND	10531873	16	1	575	11 28 626 1	AL BEGEHUNG
GELENKBOLZENSPANNBAND	10531873	13	2	659	11 26 901 8	HALTER KPL
GELENKBOLZENSPANNBAND	10581173	20	2	217	11 24 114 5	ANLAGE HARNSTOFF EINBAU
GELENKKOPF	513319614	13	1	39	51 33 139 14	DOPPELWIRKZYL
GELENKLAGER	746911614	18	4	581	11 28 629 9	MONTAGETEILE
GELENKLAGER	746913614	17	1	666	11 23 619 7	SELBSTVERLADESYSTEM NR
GELENKLAGER	746925314	13	1	703	59 20 008 14	DOPPELWIRKZYL
GELENKLAGER	746925314	14	1	703	59 20 008 14	DOPPELWIRKZYL
GENERATOR VORM.	10145845	440	1	224	12 42 545 4	DIESELMOTOR
GERAETEHALTER	10445629	1	2	440	11 30 962 5	HALTER KPL
GERAETESTECKER	10296818	92	1	517	11 90 151 1	KABELSATZ 1 ANLENKSTUECK
GERAEUSCHDAEMPFER	502661608	7	1	8	11 92 958 8	LUFTFUEHRUNG KPL
GETRIEBE	10583865	3	1	365	10 55 156 3	WINDE
GETRIEBE	11893213	1	1	489	10 53 039 8	WINDE
GETRIEBEDECKEL	927563901	65	1	396	90 01 376 2	DREHWERKANTRIEB
GETRIEBENOCKENENDSCHAL	606279214	1	1	487	11 21 634 2	WINDE 1 EL
GEWICHT	388283108	18	1	591	99 30 800 14	SPITZENENDSCHALTER EINBA
GEWICHT	388283208	19	1	591	99 30 800 14	SPITZENENDSCHALTER EINBA
GEWINDEANSCHLUSSSTUTZE	927739401	1	1	356	93 36 755 01	OELMESSEINRICHTUNG
GEWINDEANSCHLUSSSTUTZE	927739401	20	1	356	93 36 755 01	OELMESSEINRICHTUNG
GEWINDEROHR	592316114	150	1	98	11 24 682 0	VERTEILERGETRIEBE
GEWINDESTIFT	11267417	7	1	107	10 59 347 4	DRUCKBEGRENZUNGSVENTI
GEWINDESTIFT	7373597	17	2	451	51 24 059 14	V.MOTOR
GEWINDESTIFT DIN 913 22H	4980900	20	1	125	92 78 875	DRUCKABSCHNEIDUNG
GEWINDESTIFT DIN 913 M6X6	4980082	21	1	153	10 14 131 6	ANSCHLUSSPLATTE VORM.
GEWINDESTIFT DIN 914 M6X2	404601014	15	3	616	11 21 552 4	WINKELANZEIGE NRS
GEWINDESTIFT ISO 4026 M10	404403114	21	1	402	11 27 970 6	KABINE KPL
GITTERROST		500	-1	343	10 51 969 7	NADELEINZIEHWINDE
GITTERROST		501	-1	343	10 51 969 7	NADELEINZIEHWINDE
GITTERROST	10222994	46	1	510	11 23 820 3	ANLENKSTUECK KPL
GITTERROST	10227124	11	1	483	99 26 718 14	PODEST

Bezeichnung	Artikel	Pos.	Menge	Blatt	Baugruppe	Bezeichnung
GITTERROST	10517914	10	1	650	11 29 473 7	LAUFSTEG ZWISCHENSTUEC
GITTERROST	10517914	10	1	654	11 29 474 2	LAUFSTEG ZWISCHENSTUEC
GITTERROST	10530418	14	1	552	11 28 390 8	AL BEGEHUNG
GITTERROST	10530418	14	1	568	11 28 583 8	AL BEGEHUNG
GITTERROST	10545915	6	1	313	11 24 409 0	VERKLEIDUNG OW EINBAU KP
GITTERROST	10552808	10	1	649	10 55 280 7	GITTERROST KPL
GITTERROST	10553070	12	1	654	11 29 474 2	LAUFSTEG ZWISCHENSTUEC
GITTERROST	10553070	12	3	655	11 29 474 3	LAUFSTEG ZWISCHENSTUEC
GITTERROST	10581980	84	1	511	11 23 820 3	ANLENKSTUECK KPL
GITTERROST	10581981	85	1	511	11 23 820 3	ANLENKSTUECK KPL
GITTERROST	10581982	95	1	511	11 23 820 3	ANLENKSTUECK KPL
GITTERROST	10584105	50	1	315	11 24 409 0	VERKLEIDUNG OW EINBAU KP
GITTERROST	10598959	10	1	521	10 58 193 7	GITTERROST KPL
GITTERROST	10599053	24	1	521	10 58 193 7	GITTERROST KPL
GITTERROST	11239010	92	1	511	11 23 820 3	ANLENKSTUECK KPL
GITTERROST	11245758	3	1	636	11 24 575 5	PODEST
GITTERROST	11245766	5	2	635	11 24 147 8	UW PODEST
GITTERROST	11245767	6	2	635	11 24 147 8	UW PODEST
GITTERROST	11263492	6	1	581	11 28 629 9	MONTAGETEILE
GITTERROST	11275747	41	1	510	11 23 820 3	ANLENKSTUECK KPL
GITTERROST	11311245	15	2	552	11 28 390 8	AL BEGEHUNG
GITTERROST	11311245	15	1	568	11 28 583 8	AL BEGEHUNG
GITTERROST	11311245	14	1	575	11 28 626 1	AL BEGEHUNG
GITTERROST	11311371	20	1	568	11 28 583 8	AL BEGEHUNG
GITTERROST	11311371	15	1	575	11 28 626 1	AL BEGEHUNG
GITTERROST	11311390	20	1	575	11 28 626 1	AL BEGEHUNG
GITTERROST	11314134	10	1	655	11 29 474 3	LAUFSTEG ZWISCHENSTUEC
GITTERROST	790512314	5	1	581	11 28 629 9	MONTAGETEILE
GITTERROST	790512414	4	1	581	11 28 629 9	MONTAGETEILE
GITTERROST KPL	10552807	12	1	647	10 55 601 0	STURZSICHERUNG NRS
GITTERROST KPL	10552807	11	1	650	11 29 473 7	LAUFSTEG ZWISCHENSTUEC
GITTERROST KPL	10552807	11	1	654	11 29 474 2	LAUFSTEG ZWISCHENSTUEC
GITTERROST KPL	10552807	11	1	655	11 29 474 3	LAUFSTEG ZWISCHENSTUEC
GITTERROST KPL	10581937	48	1	510	11 23 820 3	ANLENKSTUECK KPL
GLEICHLAUF HYDR NRS	10536350	650	1	4	01 38 376 14	LR 1300 SX
GLEICHLAUF HYDR NRS	10536351	2	1	688	10 53 635 0	GLEICHLAUF HYDR NRS
GLEITDICHTRING	10352364	150	1	685	59 21 826 14	ABSTUETZZYLINDER
GLEITDICHTRING	10352365	155	1	685	59 21 826 14	ABSTUETZZYLINDER
GLEITDICHTRING	11253456	7	7	450	11 89 617 8	DS
GLEITFUEHRUNG 8/14X35 PO	11273242	17	4	313	11 24 409 0	VERKLEIDUNG OW EINBAU KP
GLEITRINGDICHTUNG	7610244	2	1	471	96 93 178 01	FAHRANTRIEB
GLEITSCHEIBE 72X152X6	9889809	15	1	126	10 13 975 2	RS SCHWENKJOCH
GLEITSCHEIBE 72X152X6	9889809	15	1	130	98 89 984	RS TRIEBWERK
GLEITSCHEIBE 72X152X6	9889809	15	1	133	98 89 983	RS TRIEBWERK
GLUEHLAMPE	607021114	15	1	48	70 27 205	ARBEITSSCHEINWERFER
GLUEHLAMPE	607021714	1	1	49	10 22 450 0	ARBEITSSCHEINWERFER
GLUEHLAMPE	607021714	42	1	403	11 27 973 6	KABINE EL
GLUEHLAMPE	607021714	42	1	406	10 55 963 5	SCHALTSCHR X1
GLUEHLAMPE	607023214	43	1	403	11 27 973 6	KABINE EL
GLUEHLAMPE	607023214	43	1	406	10 55 963 5	SCHALTSCHR X1
GRENZTASTER	606655108	43	1	45	11 24 519 0	OW EL
GRIFF	10020487	4	1	321	10 57 883 5	TUER
GRIFF	10020487	4	1	323	10 57 897 6	TUER
GRIFF	10020487	4	1	327	10 56 580 8	TUER
GRIFF	10428121	1	1	425	11 25 097 0	SCHIEBEFENSTER
GRIFF	10579145	2	1	326	10 56 623 7	TUER
GRIFF	10579454	2	1	325	10 57 940 0	TUER
GRIFF	7025006	20	1	435	70 24 996	SITZRAHMEN
GRIFFKAPPE	11694640	9	1	264	10 13 508 0	DRUCKROHRSTUTZEN
GRIFFSCHALE	10226472	18	1	423	10 35 007 6	SCHIEBETUER

Bezeichnung	Artikel	Pos.	Menge	Blatt	Baugruppe	Bezeichnung
GRIFFSCHALE	592289614	2	1	427	59 22 895 14	KLAPPE KPL
GRUNDPLATTE KPL	992757214	10	1	338	99 23 386 14	BALLASTGEWICHT ANORD
GRUNDPLATTE SCHWK	992741214	10	1	339	99 27 572 14	GRUNDPLATTE KPL
GUMMI	10522190	5	1	426	59 22 871 14	FRONTSCHEIBE KPL
GUMMI	10535526	12	1	545	99 29 588 14	AUFLAGE
GUMMI	10535526	12	2	546	10 35 063 3	HALTERUNG
GUMMI	10540082	68	2	510	11 23 820 3	ANLENKSTUECK KPL
GUMMI	11269800	9	1	195	11 24 114 0	KUEHLER EINBAU WASSER
GUMMI	11285382	11	1	553	11 28 391 3	BEFESTIGUNGSCHELLE
GUMMI	289058614	5	0.016	79	10 56 067 3	BATTERIE EINBAU KPL
GUMMI	289058614	8	0.08	79	10 56 067 3	BATTERIE EINBAU KPL
GUMMI	289058614	9	0.023	79	10 56 067 3	BATTERIE EINBAU KPL
GUMMIMUFFE	10123671	3	1	239	10 14 671 6	OELLEITUNG VORM.
GUMMIMUFFE	10126090	4	1	232	10 14 201 8	KURBELGEHAEUSEENTLUEF
GUMMIMUFFE	10126091	2	1	232	10 14 201 8	KURBELGEHAEUSEENTLUEF
GUMMIMUFFE	10126317	7	1	239	10 14 671 6	OELLEITUNG VORM.
GUMMIMUFFE	10128228	9	4	294	10 14 622 4	LADEDRUCKREGELUNG
GUMMIMUFFE	10128875	24	1	292	10 14 013 6	ATL-ANBAU
GUMMIMUFFE	10129904	4	1	276	10 14 967 6	VERBINDUNGSLEITUNG ANBA
GUMMIMUFFE	10133641	3	1	232	10 14 201 8	KURBELGEHAEUSEENTLUEF
GUMMIMUFFE	9271340	10	1	11	11 92 891 3	KOMPRESSOR NRS
GUMMIMUFFE	9271340	13	1	274	10 14 736 9	ANSAUGSTUTZEN ANBAU
GUMMIPUFFER	11903519	1	4	707	11 23 671 4	RAHMEN
GUMMIRING	10123876	103	2	305	10 15 028 8	KABELBAUM ANBAU
GUMMIRING	10123877	12	2	184	11 24 448 7	ZENTRALAGGREGAT EL
GW-LAGER	990706901	10	1	69	10 51 963 1	OW DREHVERBINDUNG EINBA
HAFTETIKETTE	10518558	1	1	622	10 52 439 2	SCHLAUCHLISTE
HAFTETIKETTE	10518558	2	5	622	10 52 439 2	SCHLAUCHLISTE
HAFTETIKETTE	10518558	1	3	674	99 27 747 14	SCHLAUCHLISTE
HAFTETIKETTE	10518558	1	2	691	10 53 635 2	SCHLAUCHLISTE
HALTEKLAMMER OT	725810414	54	2	633	10 55 372 1	DACHGELAENDER NRS
HALTEPLATTE	11259704	200	1	432	11 93 934 6	KLIMAANLAGE
HALTEPLATTE	11259705	210	1	432	11 93 934 6	KLIMAANLAGE
HALTER	10041876	17	1	280	10 14 286 0	KLIMAKOMPRESSOR ANBAU
HALTER	10138079	3	1	267	10 14 679 7	KRAFTSTOFF-FEINFILTERAN
HALTER	10144123	11	1	305	10 15 028 8	KABELBAUM ANBAU
HALTER	10145373	2	1	294	10 14 622 4	LADEDRUCKREGELUNG
HALTER	10146405	14	1	305	10 15 028 8	KABELBAUM ANBAU
HALTER	10146836	3	1	294	10 14 622 4	LADEDRUCKREGELUNG
HALTER	10223693	33	2	313	11 24 409 0	VERKLEIDUNG OW EINBAU KP
HALTER	10224272	61	2	46	11 24 519 0	OW EL
HALTER	10224272	49	3	403	11 27 973 6	KABINE EL
HALTER	10527391	1	1	700	10 57 848 6	MONITOR KABINE ANBAU
HALTER	10556597	12	1	195	11 24 114 0	KUEHLER EINBAU WASSER
HALTER	10575980	30	3	333	11 24 483 7	BEF-TEILE OW
HALTER	10579104	10	1	189	10 51 948 1	ANSAUGROHR OEL
HALTER	10584123	47	1	315	11 24 409 0	VERKLEIDUNG OW EINBAU KP
HALTER	10584124	48	1	315	11 24 409 0	VERKLEIDUNG OW EINBAU KP
HALTER	10591343	54	1	402	11 27 970 6	KABINE KPL
HALTER	11218236	70	1	510	11 23 820 3	ANLENKSTUECK KPL
HALTER	11242757	42	1	217	11 24 114 5	ANLAGE HARNSTOFF EINBAU
HALTER	11250382	3	1	195	11 24 114 0	KUEHLER EINBAU WASSER
HALTER	11251056	8	1	202	11 24 114 1	KUEHLER EINBAU LADELUFT
HALTER	11262894	3	1	437	11 26 095 6	STEUERKONSOLE RE KPL
HALTER	11271098	10	1	637	11 27 109 7	FANGSTANGE NRS
HALTER	11298436	10	2	559	11 94 087 8	MONTAGEEINHEIT
HALTER	11925182	63	1	217	11 24 114 5	ANLAGE HARNSTOFF EINBAU
HALTER	592290214	81	1	420	10 35 008 0	KABINE
HALTER	592290314	82	1	420	10 35 008 0	KABINE
HALTER	592290414	84	1	420	10 35 008 0	KABINE

Bezeichnung	Artikel	Pos.	Menge	Blatt	Baugruppe	Bezeichnung
HALTER	954229003	101	1	335	11 24 483 7	BEF-TEILE OW
HALTER	969641501	50	1	357	96 96 543 01	WINDENRAHMEN
HALTER ANBAU	10146587	10	1	305	10 15 028 8	KABELBAUM ANBAU
HALTER KAMERA	385137114	13	1	699	10 58 064 7	VIDEOUEBERWACHUNGSANL
HALTER KPL	10584210	49	1	315	11 24 409 0	VERKLEIDUNG OW EINBAU KP
HALTER KPL	11269018	11	2	658	10 55 722 4	STURZSICHERUNG NRS
HALTER KPL	11309625	57	1	402	11 27 970 6	KABINE KPL
HALTER SCHWK	10579806	41	1	217	11 24 114 5	ANLAGE HARNSTOFF EINBAU
HALTER SCHWK	11247880	14	1	207	11 24 114 2	ANSAUGANLAGE LUFT
HALTER SCHWK	11929329	20	1	5	11 93 045 7	UMBAUSATZ NRS
HALTERUNG	10350632	10	1	546	10 35 063 3	HALTERUNG
HALTERUNG	10350633	11	2	544	11 28 594 7	AUFLAGE KPL
HALTERUNG	10350633	11	2	564	11 28 619 1	AUFLAGE KPL
HALTERUNG	10350633	11	2	571	11 28 653 4	AUFLAGE KPL
HALTERUNG	10588168	18	1	77	10 58 163 4	KABINENAUFHAENGUNG KPL
HALTERUNGSSCHELLE	7362546	55	16	217	11 24 114 5	ANLAGE HARNSTOFF EINBAU
HALTERUNGSSCHELLE	7382085	40	2	305	10 15 028 8	KABELBAUM ANBAU
HALTESCHEIBE		6	1	352	93 88 497 01	PLANETENGETRIEBE
HALTESCHEIBE	944112203	51	1	396	90 01 376 2	DREHWERKANTRIEB
HALTESCHEIBE	944169103	36	1	396	90 01 376 2	DREHWERKANTRIEB
HALTESCHEIBE	944228903	16	1	396	90 01 376 2	DREHWERKANTRIEB
HALTESCHEIBE 115X55X6		31	1	352	93 88 497 01	PLANETENGETRIEBE
HALTESCHEIBE 115X55X6		41	1	352	93 88 497 01	PLANETENGETRIEBE
HALTESEIL	10350539	10	2	645	97 05 997 03	ZWISCHENABSPANNUNG NR
HALTESEIL	774760214	1	6	645	97 05 997 03	ZWISCHENABSPANNUNG NR
HALTESEIL	774760314	4	6	645	97 05 997 03	ZWISCHENABSPANNUNG NR
HALTESEIL	774760414	3	6	645	97 05 997 03	ZWISCHENABSPANNUNG NR
HALTESEIL	774760514	2	8	645	97 05 997 03	ZWISCHENABSPANNUNG NR
HALTESEIL	790538014	9	2	645	97 05 997 03	ZWISCHENABSPANNUNG NR
HALTESTANGE	10226400	10	2	560	99 24 404 14	HALTESTANGE KPL
HALTESTANGE	10226401	10	2	569	99 24 405 14	HALTESTANGE KPL
HALTESTANGE	10226401	10	4	576	99 24 406 14	HALTESTANGE KPL
HALTESTANGE	10336904	10	2	542	99 26 417 14	HALTESTANGE KPL
HALTESTANGE	10336970	10	2	522	99 30 060 14	HALTESTANGE KPL
HALTESTANGE	10337309	10	2	588	99 24 594 14	HALTESTANGE KPL
HALTESTANGE	949910614	10	1	570	11 93 702 0	HALTESTANGE KPL
HALTESTANGE	949910714	10	1	561	11 93 703 7	HALTESTANGE KPL
HALTESTANGE KPL	11937020	13	2	566	11 93 750 1	MONTAGEEINHEIT
HALTESTANGE KPL	11937020	13	4	573	11 93 750 4	MONTAGEEINHEIT
HALTESTANGE KPL	11937037	13	2	548	11 93 749 9	MONTAGEEINHEIT
HALTESTANGE KPL	992440414	12	1	548	11 93 749 9	MONTAGEEINHEIT
HALTESTANGE KPL	992440514	12	1	566	11 93 750 1	MONTAGEEINHEIT
HALTESTANGE KPL	992440614	12	1	573	11 93 750 4	MONTAGEEINHEIT
HALTESTANGE KPL	992459414	14	1	578	11 24 132 4	AL KOPF KPL
HALTESTANGE KPL	992641714	11	1	536	11 23 937 8	A-BOCK 1 MONTAGEEINHEIT
HALTESTANGE KPL	993006014	57	1	510	11 23 820 3	ANLENKSTUECK KPL
HANDENTLUEFTUNGSPUMPE	10129218	4	1	214	10 55 091 1	KRAFTSTOFFVORFILTER AN
HANDHEBELFETTPRESSE	10445635	13	1	70	11 27 315 5	ZENTRALSCHMIERUNG
HANDHEBELPRESSE 400B	885602114	4	1	505	10 56 183 8	WERKZEUG
HANDKURBEL	616155414	10	1	519	61 61 541 14	KABELTROMMEL
HANDLAUF	10518461	41	1	467	11 89 365 0	RAUPENTRAEGER RE KPL
HANDLAUF	10518461	42	1	478	11 89 365 1	RAUPENTRAEGER LI KPL
HANDLAUF	10523559	11	1	467	11 89 365 0	RAUPENTRAEGER RE KPL
HANDLAUF	10523559	11	1	478	11 89 365 1	RAUPENTRAEGER LI KPL
HANDRAD	5609144	53	1	436	10 28 999 3	SCHWINGSYSTEM
HARNSTOFFBEHAELTER	11242408	6	1	217	11 24 114 5	ANLAGE HARNSTOFF EINBAU
HAUPT EZW HYDR	10519687	2	1	361	10 51 968 6	EZW OW EINBAU KPL
HAUPTDUESE SOLEX 0.8MM	714001914	38	2	20	11 29 618 6	OW HYDR
HAUPTDUESE SOLEX 0.8MM	714001914	5	1	702	10 51 728 1	VERROHRUNG HYDR
HAUPTDUESE SOLEX 1.2MM	714002114	7	1	620	10 51 726 2	VERROHRUNG HYDR

Bezeichnung	Artikel	Pos.	Menge	Blatt	Baugruppe	Bezeichnung
HAUPTDUESE SOLEX 1MM	714001514	12	1	8	11 92 958 8	LUFTFUEHRUNG KPL
HEBEL	10447749	5	1	42	10 44 510 5	SCHNELLVERSCHLUSSKUPPL
HEBEL	10447749	5	1	457	10 44 510 2	SCHNELLVERSCHLUSSKUPPL
HEBEL	10447749	5	1	458	10 44 510 1	SCHNELLVERSCHLUSSKUPPL
HEBEL	11909498	160	1	432	11 93 934 6	KLIMAANLAGE
HEBEL SCHWK	992751514	18	2	660	10 51 971 3	SELBSTVERLADESYSTEM NR
HECKSCHEIBE	592289014	48	1	419	10 35 008 0	KABINE
HEIZFLANSCH ANBAU	9078314	260	1	224	12 42 545 4	DIESELMOTOR
HEIZFLANSCH VORM.	10299988	1	1	277	90 78 314	HEIZFLANSCH ANBAU
HILFSSEIL	606655308	2	1	596	92 75 218 08	ENDSCHALTER HUB OBEN
HINWEISSCHILD	9402377	10	4	524	11 26 694 5	SCHILDER ANORD
HITZESCHUTZ MIT BEFEST.	10147370	415	1	224	12 42 545 4	DIESELMOTOR
HITZESCHUTZBLECH	10147371	1	1	291	10 14 737 0	HITZESCHUTZ MIT BEFEST.
HITZESCHUTZBLECH	12428325	10	1	276	10 14 967 6	VERBINDUNGSLEITUNG ANBA
HOCHDRUCKPUMPE MIT BEFE	10150857	171	1	223	12 42 545 4	DIESELMOTOR
HOEHENSICHERUNGSGERAE	10556014	3	1	648	10 55 601 1	ABSTURZSICHERUNG KPL
HOHLSCHRAUBE	10151637	2	1	231	10 15 163 4	KOLBENKUEHLUNG VORM.
HOHLSCHRAUBE	11443132	11	2	269	10 14 333 9	KRAFTSTOFFLEITUNGEN
HOHLSCHRAUBE 10X1 9SMN	9080466	3	5	285	10 14 821 7	ROHRLEITUNG ANBAU
HOHLSCHRAUBE DIN 7643 10X	4079240	17	1	270	10 14 588 5	LECKOELRUECKLAUF
HOHLSCHRAUBE DIN 7643 12X	4980741	3	4	14	11 41 475 7	ANBAUTEILE LUFTPRESSER
HOHLSCHRAUBE DIN 7643 12X	4980741	13	1	293	10 14 511 2	ABGASSTUTZEN ANBAU
HOHLSCHRAUBE DIN 7643 15	4981226	6	4	269	10 14 333 9	KRAFTSTOFFLEITUNGEN
HOHLSCHRAUBE DIN 7643 15X	10129819	8	1	269	10 14 333 9	KRAFTSTOFFLEITUNGEN
HOHLSCHRAUBE DIN 7643 8X	4980664	10	1	270	10 14 588 5	LECKOELRUECKLAUF
HOHLSCHRAUBE DIN 7643 M1	4079160	7	1	14	11 41 475 7	ANBAUTEILE LUFTPRESSER
HOHLSCHRAUBE DIN 7643 M1	4079160	5	7	270	10 14 588 5	LECKOELRUECKLAUF
HOHLSCHRAUBE DIN 7643 M1	4079160	8	1	294	10 14 622 4	LADEDRUCKREGELUNG
HOHLSCHRAUBE R1/2"	10588723	1	1	530	59 20 224 14	LASTHALTEVENTIL
HUBLASCHE KPL	11890636	16	1	666	11 23 619 7	SELBSTVERLADESYSTEM NR
HUELSE	11267440	2	1	109	11 06 730 4	ABSCHALTVENTIL
HUELSE	11267453	3	1	111	11 26 744 7	WECHSELVENTIL
HUELSE 14/25X26 S235JRH;E	11276612	5	1	202	11 24 114 1	KUEHLER EINBAU LADELUFT
HUELSE 20/13.5X44 AISI 316	10571340	14	2	195	11 24 114 0	KUEHLER EINBAU WASSER
HUELSE 8X0.4	501507314	15	1	626	54 02 702 14	SEILTROMMEL KPL
HUELSE NG32/RD60/23X85	11226016	20	1	387	51 14 347 14	DW SICHERUNGSBLOCK
HUPE	614046114	81	1	403	11 27 973 6	KABINE EL
HYDRAULIKSCHLAUCH	510511814	37	5	467	11 89 365 0	RAUPENTRAEGER RE KPL
HYDRAULIKSCHLAUCH	510511814	37	5	478	11 89 365 1	RAUPENTRAEGER LI KPL
HYDRAULIKSCHLAUCH	510559314	43	2.5	195	11 24 114 0	KUEHLER EINBAU WASSER
INJEKTOR KPL.	10144093	13	1	217	11 24 114 5	ANLAGE HARNSTOFF EINBAU
INJEKTOR MIT BEFEST.	10152867	190	6	223	12 42 545 4	DIESELMOTOR
INNENLAMELLE	501540514	98	7	380	99 04 645 14	ANTRIEB
INNENLAMELLE	503192901	9	9	355	93 95 895 01	BREMSLAMELLENSATZ
INNENLAMELLE	503199401	5	7	399	93 93 478 01	BREMSLAMELLENSATZ
INNENLAMELLE	540287614	6	7	397	50 20 383 01	LAMELLENBREMSE
INNENLEUCHTE	607147008	41	1	403	11 27 973 6	KABINE EL
INNENLEUCHTE	607147008	41	1	406	10 55 963 5	SCHALTSCHR X1
INNENRAD		20	1	352	93 88 497 01	PLANETENGETRIEBE
INNENRAD		55	1	352	93 88 497 01	PLANETENGETRIEBE
INNENRAD	512406114	11	1	625	54 02 701 14	PLANETENSTUFE
INNENRAD	512406214	21	1	625	54 02 701 14	PLANETENSTUFE
INNENRAD	927562801	25	1	396	90 01 376 2	DREHWERKANTRIEB
INNENRAD	944378903	60	1	471	96 93 178 01	FAHRANTRIEB
INNENRAD	944403803	10	1	471	96 93 178 01	FAHRANTRIEB
INNENRAD	944406703	65	1	471	96 93 178 01	FAHRANTRIEB
INNENRING	747401901	71	1	396	90 01 376 2	DREHWERKANTRIEB
INNENSECHSKANTSCHRAUBE	11250990	420	4	98	11 24 682 0	VERTEILERGETRIEBE
INNENSECHSKANTSCHRAUB	11290853	460	1	98	11 24 682 0	VERTEILERGETRIEBE
INNENSECHSKANTSCHRAUB	11290854	465	1	98	11 24 682 0	VERTEILERGETRIEBE

Bezeichnung	Artikel	Pos.	Menge	Blatt	Baugruppe	Bezeichnung
ISOLIERSCHLAUCH	603000408	17	2.3	319	11 24 409 1	VERKLEIDUNG
ISOLIERSTUECK	10227563	79	2	406	10 55 963 5	SCHALTSCHR X1
ISOLIERUNG	11892804	18	1	705	11 93 621 2	KLIMAANLAGE NRS
JACK-UP SYSTEM HYDR NRS	11235246	2	1	682	11 89 568 7	SELBSTVERLADESYSTEM NR
JACK-UP SYSTEM HYDR NRS	11894080	2	1	676	11 89 568 5	SELBSTVERLADESYSTEM NR
KABEL	11234650	150	4	404	11 27 973 6	KABINE EL
KABEL	11240499	3	1	696	10 53 352 4	KABINE EL
KABELBAUM	12403954	1	1	305	10 15 028 8	KABELBAUM ANBAU
KABELBAUM ANBAU	10150288	580	1	225	12 42 545 4	DIESELMOTOR
KABELBINDER	603202314	15	1	16	11 93 193 0	OW EL
KABELBINDER	603202314	99	2	305	10 15 028 8	KABELBAUM ANBAU
KABELBINDER	603202514	16	1	16	11 93 193 0	OW EL
KABELDURCHFUEHRUNG KAB	916525114	31	1	403	11 27 973 6	KABINE EL
KABELLEITER SCHWK	11246919	42	1	333	11 24 483 7	BEF-TEILE OW
KABELLEITER SCHWK	11247023	61	1	335	11 24 483 7	BEF-TEILE OW
KABELLEITER SCHWK	11247131	62	1	335	11 24 483 7	BEF-TEILE OW
KABELLEITER SCHWK	11247158	48	1	333	11 24 483 7	BEF-TEILE OW
KABELLEITER SCHWK	11247207	50	1	333	11 24 483 7	BEF-TEILE OW
KABELLEITER SCHWK	11265089	65	1	335	11 24 483 7	BEF-TEILE OW
KABELSATZ	10223208	30	1	432	11 93 934 6	KLIMAANLAGE
KABELSATZ	10575599	21	1	579	10 53 141 3	AL KOPF EL
KABELSATZ	11376327	582	1	225	12 42 545 4	DIESELMOTOR
KABELSATZ	11931931	110	1	15	11 93 192 6	UMBAU EL NRS
KABELSATZ	11931932	120	1	15	11 93 192 6	UMBAU EL NRS
KABELSATZ	11946453	290	1	432	11 93 934 6	KLIMAANLAGE
KABELSATZ	11946454	300	1	432	11 93 934 6	KLIMAANLAGE
KABELSATZ	11946455	310	1	432	11 93 934 6	KLIMAANLAGE
KABELSATZ 1 ANLENKSTUECK	11901511	21	1	515	11 90 150 9	ANLENKSTUECK EL
KABELSATZ ANBAU	10150287	2	1	305	10 15 028 8	KABELBAUM ANBAU
KABELSATZ ANBAU	11425228	8	1	305	10 15 028 8	KABELBAUM ANBAU
KABELSCHUH	602206114	24	1	51	10 56 645 8	KLEMMKASTEN
KABELSCHUH	602206514	74	2	46	11 24 519 0	OW EL
KABELSTRANG	10226573	3	1	343	10 51 969 7	NADELEINZIEHWINDE
KABELSTRANG	10226573	91	1	517	11 90 151 1	KABELSATZ 1 ANLENKSTUECK
KABELSTRANG	10226574	3	1	618	10 51 743 9	SEILEINZIEHWINDE KPL NRS
KABELSTRANG	10519084	203	1	404	11 27 973 6	KABINE EL
KABELSTRANG	10540846	98	1	404	11 27 973 6	KABINE EL
KABELSTRANG	11239085	11	1	52	11 23 908 2	STEUERPULT
KABELSTRANG	11259039	206	1	404	11 27 973 6	KABINE EL
KABELSTRANG	11265111	11	1	518	91 92 528 14	KABELTROMMEL
KABELSTRANG	11912031	205	1	404	11 27 973 6	KABINE EL
KABELSTRANG BETANKUNG	10521560	60	1	725	10 52 155 9	MODUL BETANKUNGSANLAG
KABELSTRANG W 1	11247122	11	1	184	11 24 448 7	ZENTRALAGGREGAT EL
KABELSTRANG W 10	10559638	25	1	406	10 55 963 5	SCHALTSCHR X1
KABELSTRANG W 19	10519082	201	1	404	11 27 973 6	KABINE EL
KABELSTRANG W 2	11247121	11	1	45	11 24 519 0	OW EL
KABELSTRANG W 20	11261603	202	1	404	11 27 973 6	KABINE EL
KABELSTRANG W 22	10519085	204	1	404	11 27 973 6	KABINE EL
KABELSTRANG W 3	10563643	13	1	45	11 24 519 0	OW EL
KABELSTRANG W 40	10563800	41	1	539	10 53 120 7	A-BOCK EL
KABELSTRANG W 40	11314473	50	1	539	10 53 120 7	A-BOCK EL
KABELSTRUMPF	602707214	90	1	504	10 56 187 5	WERKZEUGAUSRUESTUNG
KABELSTRUMPF	602707414	91	1	504	10 56 187 5	WERKZEUGAUSRUESTUNG
KABELTROMMEL	616154114	21	1	518	91 92 528 14	KABELTROMMEL
KABELTROMMEL	919252814	31	1	515	11 90 150 9	ANLENKSTUECK EL
KABELTUELLE	11946462	360	1	432	11 93 934 6	KLIMAANLAGE
KABELVERSCHRAUBUNG	10045155	21	2	516	11 90 151 1	KABELSATZ 1 ANLENKSTUECK
KABELVERSCHRAUBUNG	10045155	34	1	595	97 14 959 03	SPITZENENDSCHALTER EL
KABELVERSCHRAUBUNG	10045157	22	1	516	11 90 151 1	KABELSATZ 1 ANLENKSTUECK
KABELVERSCHRAUBUNG	10045157	37	1	516	11 90 151 1	KABELSATZ 1 ANLENKSTUECK

Bezeichnung	Artikel	Pos.	Menge	Blatt	Baugruppe	Bezeichnung
KABELVERSCHRAUBUNG	602440301	23	1	516	11 90 151 1	KABELSATZ 1 ANLENKSTUECK
KABELVERSCHRAUBUNG	602440301	45	1	516	11 90 151 1	KABELSATZ 1 ANLENKSTUECK
KABELVERSCHRAUBUNG	693148214	55	1	725	10 52 155 9	MODUL BETANKUNGSANLAG
KABINE	10350080	10	1	402	11 27 970 6	KABINE KPL
KABINE EL	10533524	50	1	695	10 53 246 1	KAMERAUEBERWACHUNG
KABINE EL	11279736	3	1	402	11 27 970 6	KABINE KPL
KABINE KPL	11279706	30	1	2	01 38 376 14	LR 1300 SX
KABINENAUFHAENGUNG KPL	10581634	35	1	18	11 24 047 9	OW KPL
KABINENNEIGUNG EL NRS	10531224	3	1	701	10 51 728 0	KABINENNEIGUNG NRS
KABINENNEIGUNG NRS	10517280	719	1	4	01 38 376 14	LR 1300 SX
KAEFIGMUTTER M10-R-140-32	413003308	80	32	311	11 24 114 6	ABDECKUNG
KAEFIGMUTTER M10-R-140-32	413003308	38	18	331	11 24 922 2	ABDECKUNG UNTERSEITE
KAEFIGMUTTER M10-R-140-47	413003508	82	10	311	11 24 114 6	ABDECKUNG
KAEFIGMUTTER M10-R-140-47	413003508	58	4	315	11 24 409 0	VERKLEIDUNG OW EINBAU KP
KAEFIGMUTTER M10-R-140-62	413004408	81	8	311	11 24 114 6	ABDECKUNG
KAEFIGMUTTER M10-R-140-62	413004408	13	24	329	10 54 591 0	MOTORABDECKUNG
KAEFIGMUTTER M10-RR-140-4	485549914	21	2	57	10 51 961 6	OELKUEHLER EINBAU
KAEFIGMUTTER M10-RR-140-4	485549914	2	8	81	10 56 069 4	MODULE EINBAU
KAEFIGMUTTER M10-RR-140-4	485549914	32	53	331	11 24 922 2	ABDECKUNG UNTERSEITE
KAEFIGMUTTER M10-RR-140-6	485550014	19	4	79	10 56 067 3	BATTERIE EINBAU KPL
KAEFIGMUTTER M10-RR-140-6	485550014	29	21	313	11 24 409 0	VERKLEIDUNG OW EINBAU KP
KAEFIGMUTTER M10-RR-140-6	485550014	25	2	331	11 24 922 2	ABDECKUNG UNTERSEITE
KAEFIGMUTTER M8-R-123-47 S	413003208	9	2	704	11 22 037 2	FUSSPEDAL EL EINBAU
KAEFIGMUTTER M8-RR-123-4	485550114	61	5	315	11 24 409 0	VERKLEIDUNG OW EINBAU KP
KAEFIGMUTTER M8-RR-123-4	485550114	4	4	373	99 29 389 14	SEITENTEIL
KAEFIGMUTTER M8-RR-123-4	485550114	4	4	374	99 29 392 14	SEITENTEIL
KAEFIGMUTTER M8-RR-123-4	485550114	16	2	376	99 29 386 14	KONSOLE KPL
KAEFIGMUTTER M8-RR-123-4	485550114	16	2	377	99 29 434 14	KONSOLE KPL
KAEFIGMUTTER M8-RR-123-4	485550114	30	3	402	11 27 970 6	KABINE KPL
KAEFIGMUTTER M8-RR-123-4	485550114	43	2	633	10 55 372 1	DACHGELAENDER NRS
KAMERA CCD	10024012	31	1	695	10 53 246 1	KAMERAUEBERWACHUNG
KAMERA CCD	10024012	31	1	697	10 50 775 0	KAMERAUEBERWACHUNG
KAMERAUEBERWACHUNG	10507750	8	1	694	11 89 400 8	VIDEOUEBERWACHUNGSANL
KAMERAUEBERWACHUNG	10532461	7	1	694	11 89 400 8	VIDEOUEBERWACHUNGSANL
KAMERAUEBERWACHUNG	11893352	3	1	694	11 89 400 8	VIDEOUEBERWACHUNGSANL
KANTENSCHUTZ FLEXIBEL	10352462	17	0.422	552	11 28 390 8	AL BEGEHUNG
KANTENSCHUTZ FLEXIBEL	10352462	17	0.422	568	11 28 583 8	AL BEGEHUNG
KANTENSCHUTZ FLEXIBEL	10352462	17	0.422	575	11 28 626 1	AL BEGEHUNG
KANTENSCHUTZ FLEXIBEL	10352462	15	0.22	659	11 26 901 8	HALTER KPL
KANTENSCHUTZ FLEXIBEL	262103101	16	0.16	546	10 35 063 3	HALTERUNG
KANTENSCHUTZ FLEXIBEL	262105314	14	9	319	11 24 409 1	VERKLEIDUNG
KANTENSCHUTZ FLEXIBEL	262105314	2	1.1	321	10 57 883 5	TUER
KANTENSCHUTZ METERWAR	226016702	29	2.18	331	11 24 922 2	ABDECKUNG UNTERSEITE
KANTENSCHUTZ METERWAR	226016702	30	1.11	331	11 24 922 2	ABDECKUNG UNTERSEITE
KANTENSCHUTZ METERWAR	226016702	31	1.19	331	11 24 922 2	ABDECKUNG UNTERSEITE
KANTENSCHUTZ METERWAR	226016702	33	1.24	331	11 24 922 2	ABDECKUNG UNTERSEITE
KANTENSCHUTZ METERWAR	226016702	34	1.29	331	11 24 922 2	ABDECKUNG UNTERSEITE
KANTENSCHUTZ METERWAR	226016702	35	0.57	331	11 24 922 2	ABDECKUNG UNTERSEITE
KANTENSCHUTZ METERWAR	226016702	36	0.85	331	11 24 922 2	ABDECKUNG UNTERSEITE
KANTENSCHUTZ METERWAR	226016702	37	1.2	331	11 24 922 2	ABDECKUNG UNTERSEITE
KANTENSCHUTZ METERWAR	226016702	39	0.36	331	11 24 922 2	ABDECKUNG UNTERSEITE
KANTENSCHUTZ METERWAR	226016702	40	0.35	331	11 24 922 2	ABDECKUNG UNTERSEITE
KANTENSCHUTZ METERWAR	226016702	22	0.45	518	91 92 528 14	KABELTROMMEL
KANTENSCHUTZ METERWAR	226017802	76	4	511	11 23 820 3	ANLENKSTUECK KPL
KANTENSCHUTZ METERWAR	226017802	13	1.132	549	11 24 570 3	AL ZWISCHENSTUECK KPL
KANTENSCHUTZ METERWAR	226017802	13	1.132	567	11 24 570 9	AL ZWISCHENSTUECK KPL
KANTENSCHUTZ METERWAR	226017802	13	1.132	574	11 24 571 5	AL ZWISCHENSTUECK KPL
KAPPE	11239908	7	1	673	59 21 584 14	SENKBREMSVENTIL
KARABINERHAKEN	10508505	17	1	637	11 27 109 7	FANGSTANGE NRS
KARABINERHAKEN	744010014	2	1	462	11 91 872 5	KETTE KPL

Bezeichnung	Artikel	Pos.	Menge	Blatt	Baugruppe	Bezeichnung
KARABINERHAKEN	744010414	5	2	476	99 08 357 14	ANHAENGEKETTE
KARABINERHAKEN	744011114	12	5	317	11 24 409 1	VERKLEIDUNG
KARTUSCHE	571352308	1	1	10	11 83 721 4	LUFTTROCKNER
KBA-RING	11351303	3	1	243	10 14 636 7	KOLBEN KPL.
KEGEL	7024502	170	14	30	11 28 647 6	VENTILBLOCK
KEGEL	9266085	12	1	125	92 78 875	DRUCKABSCHNEIDUNG
KEGELROLLENLAGER	10355730	15	1	177	11 21 593 6	PUMPENELEMENT
KEGELROLLENLAGER	10355731	16	1	177	11 21 593 6	PUMPENELEMENT
KEGELROLLENLAGER	11214718	10	1	452	10 50 351 3	TRIEBWERK
KEGELROLLENLAGER	11214719	11	1	452	10 50 351 3	TRIEBWERK
KEGELROLLENLAGER	11940207	11	1	391	11 94 017 7	TRIEBWELLE
KEGELROLLENLAGER	7023837	10	1	391	11 94 017 7	TRIEBWELLE
KEGELROLLENLAGER	7462008	12	1	396	90 01 376 2	DREHWERKANTRIEB
KEGELROLLENLAGER	746224201	3	1	396	90 01 376 2	DREHWERKANTRIEB
KEGELROLLENLAGER	746225801	4	1	471	96 93 178 01	FAHRANTRIEB
KEGELROLLENLAGER	761008703	3	1	471	96 93 178 01	FAHRANTRIEB
KEGELSCHMIERNIPPEL	7001228	18	2	83	10 51 969 4	A-BOCK AUFRICHTZYL EINBA
KEGELSCHMIERNIPPEL	774301101	65	1	624	59 20 694 14	WINDE
KEGELSCHMIERNIPPEL	7743242	5	2	82	99 23 451 14	ANLENKBOLZEN EINBAU
KEGELSCHMIERNIPPEL	7743242	18	1	349	96 96 248 01	WINDE
KEGELSCHMIERNIPPEL	7743242	16	2	538	11 24 444 4	A-BOCK 1 KPL
KEGELSCHMIERNIPPEL	7743242	18	4	681	11 89 568 6	SELBSTVERLADESYSTEM NR
KEGELSTOPFEN		23	1	352	93 88 497 01	PLANETENGETRIEBE
KEGELSTOPFEN	779006601	89	1	396	90 01 376 2	DREHWERKANTRIEB
KEGELSTOPFEN	779006901	85	1	471	96 93 178 01	FAHRANTRIEB
KEILRIPPENRIEMEN	11482412	7	1	280	10 14 286 0	KLIMAKOMPRESSOR ANBAU
KEILSICHERUNGSSCHEIBE M	10536579	19	4	510	11 23 820 3	ANLENKSTUECK KPL
KEILSICHERUNGSSCHEIBE M	10536579	16	4	582	11 28 610 5	ARRETIERUNG KPL
KEILSICHERUNGSSCHEIBE M	10536580	52	16	640	99 10 116 14	SEILFUEHRUNG
KEILSICHERUNGSSCHEIBE M	10536580	11	8	711	10 52 293 0	DW GEBER NRS
KEILSICHERUNGSSCHEIBE M	10536581	24	8	538	11 24 444 4	A-BOCK 1 KPL
KEILSICHERUNGSSCHEIBE M	10536581	29	8	590	99 23 398 14	ROLLENSATZ
KEILSICHERUNGSSCHEIBE M	10536582	21	13	361	10 51 968 6	EZW OW EINBAU KPL
KEILSICHERUNGSSCHEIBE M	10536582	1	8	370	99 29 258 14	EZW ROLLENPAKET
KEILSICHERUNGSSCHEIBE M1	7024427	30	8	590	99 23 398 14	ROLLENSATZ
KEILSICHERUNGSSCHEIBE M1	7623374	31	16	361	10 51 968 6	EZW OW EINBAU KPL
KEILSICHERUNGSSCHEIBE M2	10536600	15	22	361	10 51 968 6	EZW OW EINBAU KPL
KEILSICHERUNGSSCHEIBE M6	10536576	20	4	659	11 26 901 8	HALTER KPL
KERBNAGEL ISO 8746 2X6 ST	431500401	92	2	396	90 01 376 2	DREHWERKANTRIEB
KERBNAGEL ISO 8746 2X6 ST	431500401	96	2	471	96 93 178 01	FAHRANTRIEB
KETTE	740000208	1	0.4	462	11 91 872 5	KETTE KPL
KETTE	740000208	20	3	591	99 30 800 14	SPITZENENDSCHALTER EINBA
KETTE	740000908	4	0.624	476	99 08 357 14	ANHAENGEKETTE
KETTE KPL	10350940	22	4	660	10 51 971 3	SELBSTVERLADESYSTEM NR
KETTE KPL	11918725	25	2	446	11 89 300 5	VERROHRUNG HYDR
KETTENVERBINDUNGSSCHL	773967214	2	4	476	99 08 357 14	ANHAENGEKETTE
KFZ-LEITUNG	10870540	251	10.7	51	10 56 645 8	KLEMMKASTEN
KIPPHEBEL VORM.	11448000	2	2	246	11 44 800 5	KIPPHEBELBOCK VORM.
KIPPHEBELBOCK KPL.	10148438	81	6	223	12 42 545 4	DIESELMOTOR
KIPPHEBELBOCK VORM.	11448005	1	1	245	10 14 843 8	KIPPHEBELBOCK KPL.
KLAMMER	11946451	280	1	432	11 93 934 6	KLIMAANLAGE
KLAPPE	11909480	100	1	432	11 93 934 6	KLIMAANLAGE
KLAPPE KPL	592289514	57	1	419	10 35 008 0	KABINE
KLAPPKONSOLE	10564433	10	4	681	11 89 568 6	SELBSTVERLADESYSTEM NR
KLEBESCHILD	11228726	20	1	649	10 55 280 7	GITTERROST KPL
KLEBESCHILD	11228726	17	1	657	10 55 514 8	STURZSICHERUNG NRS
KLEBESCHILD	11228734	23	1	647	10 55 601 0	STURZSICHERUNG NRS
KLEBESCHILD	11228734	16	1	650	11 29 473 7	LAUFSTEG ZWISCHENSTUEC
KLEBESCHILD	11228734	17	1	654	11 29 474 2	LAUFSTEG ZWISCHENSTUEC
KLEBESCHILD	11228734	19	1	655	11 29 474 3	LAUFSTEG ZWISCHENSTUEC

Bezeichnung	Artikel	Pos.	Menge	Blatt	Baugruppe	Bezeichnung
KLEBESCHILD	11228734	18	1	657	10 55 514 8	STURZSICHERUNG NRS
KLEBSTOFF	811208201	118	1	153	10 14 131 6	ANSCHLUSSPLATTE VORM.
KLEBSTOFF	8655023	118	1	117	10 11 835 0	ANSCHLUSSGEHAEUSE
KLEBSTOFF	8655023	104	1	226	11 38 961 7	KURBELGEHAEUSE KPL. MIT
KLEBSTOFF	8655032	119	1	119	10 11 835 7	RS ANSCHLUSSGEHAEUSE
KLEMMBUEGEL	10509133	3	2	79	10 56 067 3	BATTERIE EINBAU KPL
KLEMMDOSE	10572531	20	1	516	11 90 151 1	KABELSATZ 1 ANLENKSTUECK
KLEMMHAELFTE	602008508	55	2	8	11 92 958 8	LUFTFUEHRUNG KPL
KLEMMHAELFTE	602008508	57	6	195	11 24 114 0	KUEHLER EINBAU WASSER
KLEMMHAELFTE	602008808	38	4	480	11 31 390 8	MITTELTEIL KPL
KLEMMHAELFTE	602010114	36	16	480	11 31 390 8	MITTELTEIL KPL
KLEMMHAELFTE	602017114	72	4	510	11 23 820 3	ANLENKSTUECK KPL
KLEMMHAELFTE	602017114	19	4	552	11 28 390 8	AL BEGEHUNG
KLEMMHAELFTE	602017114	19	4	568	11 28 583 8	AL BEGEHUNG
KLEMMHAELFTE	602017114	19	4	575	11 28 626 1	AL BEGEHUNG
KLEMMHAELFTE	7365090	56	6	195	11 24 114 0	KUEHLER EINBAU WASSER
KLEMMHAELFTE	7404678	37	4	480	11 31 390 8	MITTELTEIL KPL
KLEMMHAELFTE	7413103	38	12	467	11 89 365 0	RAUPENTRAEGER RE KPL
KLEMMHAELFTE	7413103	38	12	478	11 89 365 1	RAUPENTRAEGER LI KPL
KLEMMHALTER B30	10537558	1	1	439	10 53 756 0	LEUCHTENHALTER KPL
KLEMMHEBEL	10555411	9	1	439	10 53 756 0	LEUCHTENHALTER KPL
KLEMMKASTEN	10566458	103	1	46	11 24 519 0	OW EL
KLEMMPROFIL	7014524	42	5	195	11 24 114 0	KUEHLER EINBAU WASSER
KLEMMPROFIL	7014524	30	4.5	311	11 24 114 6	ABDECKUNG
KLEMMRING	979896808	30	2	211	11 24 114 3	ABGASANLAGE
KLEMMSTUECK	319719401	30	5	350	93 88 500 01	SEILTROMMEL
KLIMAANLAGE	11939346	1	1	430	11 94 091 0	KLIMAGERAET NRS
KLIMAANLAGE NRS	11936212	724	1	4	01 38 376 14	LR 1300 SX
KLIMAGERAET NRS	11940910	124	1	420	10 35 008 0	KABINE
KLIMAKOMPRESSOR	10116767	1	1	280	10 14 286 0	KLIMAKOMPRESSOR ANBAU
KLIMAKOMPRESSOR ANBAU	10142860	340	1	224	12 42 545 4	DIESELMOTOR
KNEBEL	956049414	21	4	640	99 10 116 14	SEILFUEHRUNG
KNOPF	10289975	43	4	434	10 22 506 8	FAHRERSITZ
KNOPF	10504994	9	1	693	11 23 623 3	TASCHENSCHLOSS
KNOTENKETTE	740000801	16	2.3	319	11 24 409 1	VERKLEIDUNG
KOERPER	11932850	1	1	40	51 16 576 14	TEMPERATURREGLER
KOLBEN	10007952	4	7	453	10 00 794 7	TRIEBWERK HYDRAULIKTEIL
KOLBEN	10143510	1	1	243	10 14 636 7	KOLBEN KPL.
KOLBEN	10149655	1	1	229	10 13 845 0	ENDREGELVENTIL
KOLBEN	10152593	1	1	253	10 15 259 2	UEBERDRUCKVENTIL
KOLBEN	10324863	1	9	170	10 32 489 2	TRIEBWERK
KOLBEN	11226017	30	1	387	51 14 347 14	DW SICHERUNGSBLOCK
KOLBEN	11913123	2	1	111	11 26 744 7	WECHSELVENTIL
KOLBEN	9886591	6	1	252	10 12 948 0	OELKUEHLER VORM.
KOLBEN DS	10352353	80	1	685	59 21 826 14	ABSTUETZZYLINDER
KOLBEN DS	10352357	115	1	685	59 21 826 14	ABSTUETZZYLINDER
KOLBEN KPL.	10146367	70	6	223	12 42 545 4	DIESELMOTOR
KOLBEN M. KOLBENRINGEN	11940198	4	7	390	11 94 017 6	TRIEBWERK HYDRAULIKTEIL
KOLBENBOLZEN 52X80 16MN	10282849	6	1	243	10 14 636 7	KOLBEN KPL.
KOLBENKUEHLDUESE	10151636	1	1	231	10 15 163 4	KOLBENKUEHLUNG VORM.
KOLBENKUEHLUNG	10142749	15	6	223	12 42 545 4	DIESELMOTOR
KOLBENKUEHLUNG VORM.	10151634	1	1	230	10 14 274 9	KOLBENKUEHLUNG
KOLBENSTANGE	592138614	2	1	716	51 03 361 14	EINFACHWIRKZYL
KOMPENSATOR	10141520	5	2	290	10 14 144 3	ABGASROHR VORM.
KOMPENSATOR	10149145	2	1	293	10 14 511 2	ABGASSTUTZEN ANBAU
KOMPRESSOR	12433536	4	1	217	11 24 114 5	ANLAGE HARNSTOFF EINBAU
KOMPRESSOR NRS	11928913	5	1	5	11 93 045 7	UMBAUSATZ NRS
KONSOLE	10552306	1	1	68	10 55 268 1	MITNEHMER EINBAU
KONSOLE	10579755	3	2	188	11 24 113 8	MOTORLAGER KPL
KONSOLE	10579779	5	1	188	11 24 113 8	MOTORLAGER KPL

Bezeichnung	Artikel	Pos.	Menge	Blatt	Baugruppe	Bezeichnung
KONSOLE	10579979	7	1	79	10 56 067 3	BATTERIE EINBAU KPL
KONSOLE	11215384	6	1	188	11 24 113 8	MOTORLAGER KPL
KONSOLE	11215385	13	1	207	11 24 114 2	ANSAUGANLAGE LUFT
KONSOLE	11247208	12	1	207	11 24 114 2	ANSAUGANLAGE LUFT
KONSOLE	11247464	9	1	211	11 24 114 3	ABGASANLAGE
KONSOLE	11247607	8	1	211	11 24 114 3	ABGASANLAGE
KONSOLE	11249800	2	2	188	11 24 113 8	MOTORLAGER KPL
KONSOLE	11249889	9	2	188	11 24 113 8	MOTORLAGER KPL
KONSOLE	11250222	4	2	188	11 24 113 8	MOTORLAGER KPL
KONSOLE	11263501	17	1	188	11 24 113 8	MOTORLAGER KPL
KONSOLE	11404751	3	1	276	10 14 967 6	VERBINDUNGSLEITUNG ANBA
KONSOLE	918585114	22	2	77	10 58 163 4	KABINENAUFHAENGUNG KPL
KONSOLE	954485303	64	1	335	11 24 483 7	BEF-TEILE OW
KONSOLE	992757514	11	4	340	10 52 656 0	MONTAGETEILE
KONSOLE HINTEN	11262893	1	1	437	11 26 095 6	STEUERKONSOLE RE KPL
KONSOLE KPL	992938614	4	1	372	99 33 537 14	SEILSCHUTZ EZW KPL
KONSOLE KPL	992943414	5	1	372	99 33 537 14	SEILSCHUTZ EZW KPL
KONSOLE SCHWK	10551670	33	2	593	99 48 521 14	SPITZEN AL KPL
KONSOLE SCHWK	11245759	2	2	635	11 24 147 8	UW PODEST
KONSOLE SCHWK	11245922	3	2	635	11 24 147 8	UW PODEST
KONTAKTBUCHSE	605601801	427	24	51	10 56 645 8	KLEMMKASTEN
KONTAKTBUCHSE	605610301	426	24	51	10 56 645 8	KLEMMKASTEN
KONTAKTSTIFT	605601701	35	5	516	11 90 151 1	KABELSATZ 1 ANLENKSTUECK
KONTAKTSTIFT	605601701	32	6	595	97 14 959 03	SPITZENENDSCHALTER EL
KONTAKTVERRIEGELUNG	693013414	12	1	722	10 52 957 6	BETANKUNGSPUMPE KPL
KONTAKTVERRIEGELUNG	7368242	52	3	403	11 27 973 6	KABINE EL
KONTAKTVERRIEGELUNG	7368248	94	1	404	11 27 973 6	KABINE EL
KONTROLLLEUCHTE	11258086	41	1	45	11 24 519 0	OW EL
KONUSLAGER	746923314	21	2	188	11 24 113 8	MOTORLAGER KPL
KOPFSTUETZE	737022103	12	1	402	11 27 970 6	KABINE KPL
KOPPELLASCHE	10226402	11	4	522	99 30 060 14	HALTESTANGE KPL
KOPPELLASCHE	10226402	11	4	560	99 24 404 14	HALTESTANGE KPL
KOPPELLASCHE	10226402	11	4	569	99 24 405 14	HALTESTANGE KPL
KOPPELLASCHE	10226402	11	8	576	99 24 406 14	HALTESTANGE KPL
KOPPELLASCHE	10226402	18	4	588	99 24 594 14	HALTESTANGE KPL
KOPPELLASCHE	10336761	11	8	542	99 26 417 14	HALTESTANGE KPL
KOPPELLASCHE	10348694	11	4	588	99 24 594 14	HALTESTANGE KPL
KOPPELLASCHE	10569443	11	2	570	11 93 702 0	HALTESTANGE KPL
KOPPELLASCHE	11257246	11	2	561	11 93 703 7	HALTESTANGE KPL
KOPPELLASCHE	949911014	7	4	581	11 28 629 9	MONTAGETEILE
KRAFTMESSACHSE	11261289	1	2	533	11 29 259 6	KRAFTMESSACHSE EL
KRAFTMESSACHSE EL	11292596	3	1	525	11 29 259 8	RUECKFALLSTUETZE
KRAFTMESSLASCHE	10530243	31	2	539	10 53 120 7	A-BOCK EL
KRAFTSTOFF-FEINFILTERAN	10146797	201	1	224	12 42 545 4	DIESELMOTOR
KRAFTSTOFFANLAGE	11241144	50	1	92	11 24 048 0	ZENTRALAGGREGAT
KRAFTSTOFFFEINFILTER	10146753	1	1	267	10 14 679 7	KRAFTSTOFF-FEINFILTERAN
KRAFTSTOFFFEINFILTER	10429946	2	2	268	10 14 675 3	KRAFTSTOFFFEINFILTER
KRAFTSTOFFFILTER	11821872	38	1	217	11 24 114 5	ANLAGE HARNSTOFF EINBAU
KRAFTSTOFFLEITUNG	9076621	4	1	270	10 14 588 5	LECKOELRUECKLAUF
KRAFTSTOFFLEITUNGEN	10143339	212	1	224	12 42 545 4	DIESELMOTOR
KRAFTSTOFFSCHLAUCH	553128608	70	1	218	11 24 114 5	ANLAGE HARNSTOFF EINBAU
KRAFTSTOFFTANK EINBAU	10560732	16	1	18	11 24 047 9	OW KPL
KRAFTSTOFFTANK KPL	10560733	10	1	64	10 56 073 2	KRAFTSTOFFTANK EINBAU
KRAFTSTOFFTANK SCHWK	10560734	10	1	65	10 56 073 3	KRAFTSTOFFTANK KPL
KRAFTSTOFFVORFILTER	10303007	1	1	214	10 55 091 1	KRAFTSTOFFVORFILTER AN
KRAFTSTOFFVORFILTER AN	10550911	10	1	212	11 24 114 4	KRAFTSTOFFANLAGE
KREUZLASCHE	956507814	10	1	692	11 23 626 6	SEILHALTERUNG NRS
KRUEMMER	10153669	1	1	286	10 14 274 2	KUEHLMITTELKRUEMMER AN
KRUEMMER	550789808	16	1	207	11 24 114 2	ANSAUGANLAGE LUFT
KUEHLER	11267560	29	1	198	10 57 423 7	KUEHLER MOTOR

Bezeichnung	Artikel	Pos.	Menge	Blatt	Baugruppe	Bezeichnung
KUEHLER EINBAU LADELUFT	11241141	29	1	92	11 24 048 0	ZENTRALAGGREGAT
KUEHLER EINBAU WASSER	11241140	28	1	92	11 24 048 0	ZENTRALAGGREGAT
KUEHLER MOTOR	10225925	21	1	20	11 29 618 6	OW HYDR
KUEHLER MOTOR	10574237	10	1	195	11 24 114 0	KUEHLER EINBAU WASSER
KUEHLER MOTOR	10574239	1	1	202	11 24 114 1	KUEHLER EINBAU LADELUFT
KUEHLMITTEL	553078814	15	2.2	705	11 93 621 2	KLIMAANLAGE NRS
KUEHLMITTELKRUEMMER AN	10142742	382	1	224	12 42 545 4	DIESELMOTOR
KUEHLWASSERENTLUEFTUN	10142744	387	1	224	12 42 545 4	DIESELMOTOR
KUEHLWASSERLEITUNG	11381601	20	1	293	10 14 511 2	ABGASSTUTZEN ANBAU
KUEHLWASSERLEITUNG	11414759	2	1	14	11 41 475 7	ANBAUTEILE LUFTPRESSER
KUEHLWASSERLEITUNG	11414767	1	1	14	11 41 475 7	ANBAUTEILE LUFTPRESSER
KUEHLWASSERROHR	11250555	20	1	195	11 24 114 0	KUEHLER EINBAU WASSER
KUEHLWASSERROHR	11250556	21	1	195	11 24 114 0	KUEHLER EINBAU WASSER
KUEHLWASSERROHR	11269259	19	1	195	11 24 114 0	KUEHLER EINBAU WASSER
KUEHLWASSERROHR	11287692	18	1	195	11 24 114 0	KUEHLER EINBAU WASSER
KUEHLWASSERSCHLAUCH	11621769	49	1	195	11 24 114 0	KUEHLER EINBAU WASSER
KUEHLWASSERSCHLAUCH	11621769	50	1	195	11 24 114 0	KUEHLER EINBAU WASSER
KUEHLWASSERSCHLAUCH	11621769	5	0.5	212	11 24 114 4	KRAFTSTOFFANLAGE
KUEHLWASSERSCHLAUCH	11621769	61	1	217	11 24 114 5	ANLAGE HARNSTOFF EINBAU
KUEHLWASSERSCHLAUCH	11621772	51	1	195	11 24 114 0	KUEHLER EINBAU WASSER
KUEHLWASSERSCHLAUCH	11621772	60	1	217	11 24 114 5	ANLAGE HARNSTOFF EINBAU
KUEHLWASSERSCHLAUCH	11621777	48	1	195	11 24 114 0	KUEHLER EINBAU WASSER
KUEHLWASSERSCHLAUCH	11656331	47	1	195	11 24 114 0	KUEHLER EINBAU WASSER
KUGEL	11225403	2	1	456	10 44 656 6	WECHSELVENTIL
KUGEL	4901195	13	1	118	92 67 343	ENTLUEFTUNGSVENTIL
KUGELGELENK	10286648	4	1	696	10 53 352 4	KABINE EL
KUGELGELENK	10505322	50	1	529	10 09 917 3	DOPPELWIRKZYL
KUGELHAHN	510682014	39	1	20	11 29 618 6	OW HYDR
KUGELHAHN	510682014	1	1	506	91 90 239 14	LEITUNG HYDR
KUGELSCHEIBE DIN 6319 8.4X	10036473	4	1	261	10 15 286 7	INJEKTOR MIT BEFEST.
KUGELSCHEIBE DIN 6319 8.4X	10036473	2	1	263	10 14 114 0	RS DRUCKROHRSTUTZEN
KUGELSCHEIBE DIN 6319 8.4X	10036473	3	1	265	10 13 543 2	BEFESTIGUNG INJEKTOR
KUGELSCHEIBE DIN 6319 C8.4	11622278	3	1	262	10 15 315 1	DRUCKROHRSTUTZEN
KUGELSCHEIBE DIN 6319 C8.4	11622278	2	1	266	10 13 543 4	BEFESTIGUNG DRUCKROHR
KUGELZAPFEN	592288314	33	1	419	10 35 008 0	KABINE
KUGELZAPFEN	592288314	12	1	426	59 22 871 14	FRONTSCHEIBE KPL
KUPFERPASTE	10002552	132	1	292	10 14 013 6	ATL-ANBAU
KUPPLUNG	10348619	20	1	711	10 52 293 0	DW GEBER NRS
KUPPLUNG	11249334	2	1	193	11 24 113 9	ANBAUTEILE DIESELMOTOR
KUPPLUNGSHUELSE	10117768	11	1	164	10 13 452 1	DURCHTRIEB
KUPPLUNGSHUELSE	10129873	11	1	161	10 12 987 4	DURCHTRIEB
KUPPLUNGSHUELSE	10130007	11	1	162	10 13 000 5	DURCHTRIEB
KUPPLUNGSHUELSE	10132360	11	1	163	10 13 235 7	ANBAUSATZ DURCHTRIEB
KUPPLUNGSHUELSE	10138069	11	1	165	10 13 806 8	DURCHTRIEB
KUPPLUNGSHUELSE	9073827	15	1	119	10 11 835 7	RS ANSCHLUSSGEHAEUSE
KUPPLUNGSSTUECK	10594064	13	1	94	11 24 773 5	AGGREGAT HYDR
KUPPLUNGSSTUECK	11290850	200	2	98	11 24 682 0	VERTEILERGETRIEBE
KURBELGEHAEUSE KPL. MIT	11389617	10	1	223	12 42 545 4	DIESELMOTOR
KURBELGEHAEUSE VORM.	10154385	1	1	226	11 38 961 7	KURBELGEHAEUSE KPL. MIT
KURBELGEHAEUSEENTLUEF	10142018	16	1	223	12 42 545 4	DIESELMOTOR
KURBELGEHAEUSEENTLUEFT	10136800	1	1	232	10 14 201 8	KURBELGEHAEUSEENTLUEF
KURBELWELLE MIT ZAHNRAD	10147437	50	1	223	12 42 545 4	DIESELMOTOR
KURBELWELLENANBAUTEILE	10141983	53	1	223	12 42 545 4	DIESELMOTOR
KURBELWELLENLAGERSATZ	9076458	51	1	223	12 42 545 4	DIESELMOTOR
L-PROFIL	10581992	51	2	510	11 23 820 3	ANLENKSTUECK KPL
L-RING JL50X2	429612001	57	1	471	96 93 178 01	FAHRANTRIEB
L-STECKVERSCHRAUBUNG	11922682	64	5	217	11 24 114 5	ANLAGE HARNSTOFF EINBAU
LADEDRUCKREGELUNG	10146224	436	1	224	12 42 545 4	DIESELMOTOR
LADELUFTKUEHLER	11932246	1	1	203	10 57 423 9	KUEHLER MOTOR
LADELUFTLEITUNG	10143612	1	1	276	10 14 967 6	VERBINDUNGSLEITUNG ANBA

Bezeichnung	Artikel	Pos.	Menge	Blatt	Baugruppe	Bezeichnung
LADELUFTLEITUNG	10143614	2	1	276	10 14 967 6	VERBINDUNGSLEITUNG ANBA
LADELUFTROHR	10562107	28	1	202	11 24 114 1	KUEHLER EINBAU LADELUFT
LADELUFTROHR	11250430	20	1	202	11 24 114 1	KUEHLER EINBAU LADELUFT
LADELUFTROHR	11250438	21	1	202	11 24 114 1	KUEHLER EINBAU LADELUFT
LADELUFTROHR	11250439	25	1	202	11 24 114 1	KUEHLER EINBAU LADELUFT
LADELUFTROHR	11890132	1	1	718	11 31 446 3	LADELUFTROHR KPL
LADELUFTROHR	11890133	2	1	718	11 31 446 3	LADELUFTROHR KPL
LADELUFTROHR KPL	11314463	10	1	713	11 31 446 2	ANSAUGKLAPPEN NRS
LADELUFTWELLSCHLAUCH	10521397	35	4	202	11 24 114 1	KUEHLER EINBAU LADELUFT
LAGER	11278605	10	1	626	54 02 702 14	SEILTROMMEL KPL
LAGER	11909482	120	1	432	11 93 934 6	KLIMAANLAGE
LAGER GUMMI	726611214	18	4	483	99 26 718 14	PODEST
LAGER GUMMI	726612114	50	4	202	11 24 114 1	KUEHLER EINBAU LADELUFT
LAGER GUMMI	726612214	88	4	511	11 23 820 3	ANLENKSTUECK KPL
LAGER GUMMI	726612214	13	1	554	11 28 397 7	AUFFANGWANNE KPL
LAGER GUMMI	726612214	13	1	555	11 28 397 8	AUFFANGWANNE KPL
LAGER GUMMI	726612214	13	1	556	11 28 399 5	AUFFANGWANNE KPL
LAGER GUMMI	726612214	13	1	557	11 28 399 7	AUFFANGWANNE KPL
LAGER GUMMI	726613014	20	1	584	10 59 863 3	PENDEL KPL
LAGER GUMMI	726613614	30	4	195	11 24 114 0	KUEHLER EINBAU WASSER
LAGER GUMMI	726616208	55	2	633	10 55 372 1	DACHGELAENDER NRS
LAGER GUMMI	726616614	58	10	633	10 55 372 1	DACHGELAENDER NRS
LAGER GUMMI	726902614	21	4	321	10 57 883 5	TUER
LAGER GUMMI	726904014	37	1	77	10 58 163 4	KABINENAUFHAENGUNG KPL
LAGER GUMMI	726910114	19	3	77	10 58 163 4	KABINENAUFHAENGUNG KPL
LAGER GUMMI	726922114	37	2	593	99 48 521 14	SPITZEN AL KPL
LAGER GUMMI	726922214	13	4	57	10 51 961 6	OELKUEHLER EINBAU
LAGERBUCHSE 22X25X13	10121971	2	4	256	10 13 382 3	ABSAUGPUMPE VORM.
LAGERDECKEL	9072908	3	1	279	90 72 906	ZWISCHENRAD KPL.
LAGERFLANSCH	11219918	6	1	99	10 53 430 7	V.PUMPE
LAGERHALTER	9887948	14	2	150	10 14 360 7	RS SCHWENKLAGER
LAGERRING		15	1	352	93 88 497 01	PLANETENGETRIEBE
LAGERRING	540272714	3	1	628	54 02 704 14	ABTRIEB KPL
LAGERRING	7023833	3	1	391	11 94 017 7	TRIEBWELLE
LAGERSCHALE	7413401	17	2	177	11 21 593 6	PUMPENELEMENT
LAMELLENBREMSE	502038301	80	1	396	90 01 376 2	DREHWERKANTRIEB
LAMELLENTRAEGER		65	1	352	93 88 497 01	PLANETENGETRIEBE
LAMELLENTRAEGER	501559414	96	1	380	99 04 645 14	ANTRIEB
LAMELLENTRAEGER	927564001	70	1	396	90 01 376 2	DREHWERKANTRIEB
LAMELLENTRAEGER	944406203	75	1	471	96 93 178 01	FAHRANTRIEB
LASCHE	10591681	50	4	601	79 04 112 14	UNTERFLASCHE
LASCHE	10591682	18	4	601	79 04 112 14	UNTERFLASCHE
LASCHE	11210610	50	4	608	79 05 205 14	UNTERFLASCHE
LASCHE	571895008	18	4	608	79 05 205 14	UNTERFLASCHE
LASCHE	950610714	10	2	664	99 35 606 14	LASCHE KPL
LASCHE	953580303	10	1	442	99 18 041 14	VERZURRUNG OW
LASCHE	959912014	11	6	341	99 29 803 14	VERZURRUNG BALLAST
LASCHE	959912514	15	12	341	99 29 803 14	VERZURRUNG BALLAST
LASCHE FIXPUNKT EINZIEHS	970827603	9	1	370	99 29 258 14	EZW ROLLENPAKET
LASCHE KPL	993560614	26	4	660	10 51 971 3	SELBSTVERLADESYSTEM NR
LASCHE LI KPL	11235361	11	1	83	10 51 969 4	A-BOCK AUFRICHTZYL EINBA
LASCHE RE KPL	11235382	21	1	83	10 51 969 4	A-BOCK AUFRICHTZYL EINBA
LASCHE SCHWK	992982314	14	6	341	99 29 803 14	VERZURRUNG BALLAST
LASTHAKEN	790386214	129	1	3	01 38 376 14	LR 1300 SX
LASTHALTEVENTIL	592022414	3	2	528	10 51 959 1	VERROHRUNG HYDR
LAUFRING		60	1	352	93 88 497 01	PLANETENGETRIEBE
LAUFROLLE KPL	10552633	14	16	467	11 89 365 0	RAUPENTRAEGER RE KPL
LAUFROLLE KPL	10552633	14	16	478	11 89 365 1	RAUPENTRAEGER LI KPL
LAUFSTEG ZWISCHENSTUEC	11294737	621	1	3	01 38 376 14	LR 1300 SX
LAUFSTEG ZWISCHENSTUEC	11294742	622	1	3	01 38 376 14	LR 1300 SX

Bezeichnung	Artikel	Pos.	Menge	Blatt	Baugruppe	Bezeichnung
LAUFSTEG ZWISCHENSTUEC	11294743	624	4	3	01 38 376 14	LR 1300 SX
LAUTSPRECHER	10350334	71	2	403	11 27 973 6	KABINE EL
LECKOELRUECKLAUF	10145885	214	1	224	12 42 545 4	DIESELMOTOR
LED-LAMPE	260514602	25	7	411	10 53 171 8	TASTATUR
LEISTE	10349434	21	4	333	11 24 483 7	BEF-TEILE OW
LEISTE	10546407	9	2	329	10 54 591 0	MOTORABDECKUNG
LEISTE	11238278	1	1	652	11 23 827 7	SEILSCHUTZ
LEISTE	592287014	26	1	419	10 35 008 0	KABINE
LEISTE	948282314	6	1	79	10 56 067 3	BATTERIE EINBAU KPL
LEISTE	971303203	34	1	510	11 23 820 3	ANLENKSTUECK KPL
LEISTE	971303203	10	1	551	11 28 725 5	SEILSCHUTZ KPL
LEITER	11237423	10	1	638	11 23 740 7	AUFSTIEGSLEITER KPL NRS
LEITER	789038114	15	1	505	10 56 183 8	WERKZEUG
LEITER EINBAU	990870614	555	1	3	01 38 376 14	LR 1300 SX
LEITER EINBAU	990870614	40	1	18	11 24 047 9	OW KPL
LEITER KPL	10226190	1	1	78	99 08 706 14	LEITER EINBAU
LEITERHALTERUNG	10584890	11	1	638	11 23 740 7	AUFSTIEGSLEITER KPL NRS
LEITRAD	11299752	1	1	469	10 55 716 2	LEITRAD KPL
LEITRAD KPL	10557162	1	1	468	10 55 716 1	LEITRADEINHEIT KPL
LEITRADEINHEIT KPL	10557161	2	1	467	11 89 365 0	RAUPENTRAEGER RE KPL
LEITRADEINHEIT KPL	10557161	2	1	478	11 89 365 1	RAUPENTRAEGER LI KPL
LEITUNG	11236713	6	1	706	11 21 750 0	VERFLUESSIGER
LEITUNG	260318602	41	10.5	516	11 90 151 1	KABELSATZ 1 ANLENKSTUECK
LEITUNG HYDR	919023914	29	1	504	10 56 187 5	WERKZEUGAUSRUESTUNG
LEITUNGSSCHUTZSCHALTER	10351101	60	1	406	10 55 963 5	SCHALTSCHR X1
LEITUNGSSCHUTZSCHALTER	10351102	61	3	406	10 55 963 5	SCHALTSCHR X1
LEITUNGSSCHUTZSCHALTER	10351103	62	1	406	10 55 963 5	SCHALTSCHR X1
LEITUNGSSCHUTZSCHALTER	10351104	63	2	406	10 55 963 5	SCHALTSCHR X1
LEITUNGSSCHUTZSCHALTER	10351105	64	1	406	10 55 963 5	SCHALTSCHR X1
LEITUNGSSCHUTZSCHALTER	10351106	65	3	406	10 55 963 5	SCHALTSCHR X1
LEUCHTDRUCKTASTER	693003614	31	1	724	10 52 155 9	MODUL BETANKUNGSANLAG
LEUCHTENHALTER	10537562	2	1	439	10 53 756 0	LEUCHTENHALTER KPL
LEUCHTENHALTER KPL	10537560	45	1	402	11 27 970 6	KABINE KPL
LEUCHTSCHALTKONTAKTGE	6001593	21	5	411	10 53 171 8	TASTATUR
LEUCHTTASTER	606667814	12	1	411	10 53 171 8	TASTATUR
LEUCHTTASTER	606672114	10	2	411	10 53 171 8	TASTATUR
LEUCHTTASTER	606674714	11	4	411	10 53 171 8	TASTATUR
LEUCHTTASTKONTAKTGEBE	6204372	20	2	411	10 53 171 8	TASTATUR
LIBELLE EINBAU	970785703	44	1	402	11 27 970 6	KABINE KPL
LINSENKOPFSCHRAUBE M6X	10137839	43	4	147	10 13 802 6	RS ZYL.+STEUERPL.+WELLE
LINSENKOPFSCHRAUBE M6X	10137839	43	4	153	10 14 131 6	ANSCHLUSSPLATTE VORM.
LINSENSCHRAUBE M6X20 10.	10342275	12	14	453	10 00 794 7	TRIEBWERK HYDRAULIKTEIL
LOCHBLECH	10135441	2	1	235	10 15 529 8	OELWANNE VORM.
LOCHBLECH	10565879	10	1	327	10 56 580 8	TUER
LOCHBLECH	10566239	12	1	326	10 56 623 7	TUER
LOCHBLECH	10578841	12	1	321	10 57 883 5	TUER
LOCHBLECH	10578971	10	1	323	10 57 897 6	TUER
LOCHBLECH	10579423	12	1	325	10 57 940 0	TUER
LOCHBLECH	11290846	165	2	98	11 24 682 0	VERTEILERGETRIEBE
LOEFFELRAD	11238878	10	1	587	69 28 155 14	WINDGEBER
LUEFTER	10223209	80	1	432	11 93 934 6	KLIMAANLAGE
LUEFTER	10352188	5	1	43	10 22 592 5	KUEHLER MOTOR
LUEFTER	11267555	10	1	198	10 57 423 7	KUEHLER MOTOR
LUEFTER	11932243	4	1	203	10 57 423 9	KUEHLER MOTOR
LUEFTERABDECKUNG	10223362	10	1	321	10 57 883 5	TUER
LUEFTERABDECKUNG	10565889	2	1	327	10 56 580 8	TUER
LUEFTERHAUBE	10352186	2	1	43	10 22 592 5	KUEHLER MOTOR
LUEFTERHAUBE	11932245	2	1	203	10 57 423 9	KUEHLER MOTOR
LUEFTERKASTEN	11946423	380	1	432	11 93 934 6	KLIMAANLAGE
LUEFTERMOTOR	11236708	2	1	706	11 21 750 0	VERFLUESSIGER

Bezeichnung	Artikel	Pos.	Menge	Blatt	Baugruppe	Bezeichnung
LUEFTERRING	10352187	3	1	43	10 22 592 5	KUEHLER MOTOR
LUFTANSAUGROHR	11415782	1	1	273	10 14 736 6	LUFTANSAUGROHR ANBAU
LUFTANSAUGROHR ANBAU	10147366	220	1	224	12 42 545 4	DIESELMOTOR
LUFTANSAUGUNG ANBAU	10147364	224	1	224	12 42 545 4	DIESELMOTOR
LUFTBEHAELTER	12409205	62	1	217	11 24 114 5	ANLAGE HARNSTOFF EINBAU
LUFTBEHAELTER	502919808	5	1	8	11 92 958 8	LUFTFUEHRUNG KPL
LUFTDUESE	592289314	52	1	419	10 35 008 0	KABINE
LUFTFILTER	11246790	10	1	207	11 24 114 2	ANSAUGANLAGE LUFT
LUFTFILTERHALTER	11946424	390	1	432	11 93 934 6	KLIMAANLAGE
LUFTFUEHRUNG KPL	11929588	3	1	5	11 93 045 7	UMBAUSATZ NRS
LUFTKLAPPEN HYDR NRS	11272671	2	1	713	11 31 446 2	ANSAUGKLAPPEN NRS
LUFTLEITUNG	11621764	15	0.5	8	11 92 958 8	LUFTFUEHRUNG KPL
LUFTLEITUNG	11621764	65	9	218	11 24 114 5	ANLAGE HARNSTOFF EINBAU
LUFTPRESSER	11417370	3	1	11	11 92 891 3	KOMPRESSOR NRS
LUFTPRESSER VORM.	11417369	1	1	12	11 41 737 0	LUFTPRESSER
LUFTTROCKNER	11837214	6	1	8	11 92 958 8	LUFTFUEHRUNG KPL
M-RING	12476138	4	1	243	10 14 636 7	KOLBEN KPL.
MAGNETSPULE	10215806	1	2	531	51 04 292 14	WEGEVENTIL
MAGNETSPULE	11229186	1	2	37	10 59 143 5	WEGEVENTIL
MAGNETSPULE	693208614	1	2	36	11 22 918 4	WEGEVENTIL
MAGNETVENTIL	10336968	120	1	387	51 14 347 14	DW SICHERUNGSBLOCK
MAGNETVENTIL	11226980	6	1	673	59 21 584 14	SENKBREMSVENTIL
MAGNETVENTIL	11254299	1	1	709	10 56 536 7	MAGNETVENTIL EINBAUSATZ
MAGNETVENTIL	592300614	152	13	30	11 28 647 6	VENTILBLOCK
MAGNETVENTIL EINBAUSATZ	10565367	1	1	708	10 56 536 8	MAGNETVENTIL EINBAUSATZ
MAGNETVENTIL EINBAUSATZ	10565368	12	1	705	11 93 621 2	KLIMAANLAGE NRS
MANOMETER	750001114	7	1	505	10 56 183 8	WERKZEUG
MANOMETER	750003414	8	1	505	10 56 183 8	WERKZEUG
MANOMETERANSCHLUSS	7363730	9	2	505	10 56 183 8	WERKZEUG
MANOMETERDIREKTANSCHL	510694314	10	2	505	10 56 183 8	WERKZEUG
MANTELRING	10285620	25	2	119	10 11 835 7	RS ANSCHLUSSGEHAEUSE
MANTELRING	10285620	27	2	120	92 74 731	DS ANSCHLUSSGEHAEUSE
MASSEVERBINDUNGSBLECH	9080911	4	1	277	90 78 314	HEIZFLANSCH ANBAU
MEISTERSCHALTER	11214818	10	1	408	10 51 907 9	STEUERSTAND LI
MEISTERSCHALTER	11214820	10	1	337	10 51 127 4	DOPPEL T-MEISTERSCH EIN
MEMBRANSPEICHER	592274714	6	2	446	11 89 300 5	VERROHRUNG HYDR
MEMBRANSPEICHER	592274714	4	1	513	10 51 826 1	ANLENKSTUECK HYDR
MESSSCHLAUCH	7002475	11	2	505	10 56 183 8	WERKZEUG
MESSSTUTZEN	510629008	318	1	95	11 24 773 5	AGGREGAT HYDR
MESSSTUTZEN	510629008	205	2	446	11 89 300 5	VERROHRUNG HYDR
MESSSTUTZEN	510664814	200	2	22	11 29 618 6	OW HYDR
MESSSTUTZEN	510664814	701	2	486	11 26 260 6	WINDE 1 HYDR
MESSSTUTZEN	510664814	701	2	501	11 26 261 1	WINDE 2 HYDR
MESSSTUTZEN	510664814	613	2	620	10 51 726 2	VERROHRUNG HYDR
MESSSTUTZEN	510694514	202	19	22	11 29 618 6	OW HYDR
MESSSTUTZEN	510694514	201	2	85	10 51 969 5	A-BOCK AUFRICHTZYL HYDR
MESSSTUTZEN	510694514	671	14	95	11 24 773 5	AGGREGAT HYDR
MESSSTUTZEN	510694514	201	2	345	10 51 969 8	NADELEINZIEHWINDE HYDR
MESSSTUTZEN	510694514	201	2	362	10 51 968 7	HAUPT EZW HYDR
MESSSTUTZEN	510694514	203	2	385	10 55 216 1	VERROHRUNG HYDR
MESSSTUTZEN	510694514	204	8	446	11 89 300 5	VERROHRUNG HYDR
MESSSTUTZEN	510694514	700	2	486	11 26 260 6	WINDE 1 HYDR
MESSSTUTZEN	510694514	700	2	501	11 26 261 1	WINDE 2 HYDR
MESSSTUTZEN	510694514	201	1	528	10 51 959 1	VERROHRUNG HYDR
MESSSTUTZEN	510694514	202	1	668	10 51 973 8	SELBSTVERLADESYSTEM H
MESSSTUTZEN	510694514	700	1	715	10 56 173 5	VERROHRUNG HYDR
MESSSTUTZEN	510695314	201	2	668	10 51 973 8	SELBSTVERLADESYSTEM H
MESSSTUTZEN	510695314	706	1	678	11 89 408 3	VERROHRUNG HYDR
MESSSTUTZEN	7409720	201	1	22	11 29 618 6	OW HYDR
MESSSTUTZEN	7409720	304	2	95	11 24 773 5	AGGREGAT HYDR

Bezeichnung	Artikel	Pos.	Menge	Blatt	Baugruppe	Bezeichnung
MESSSTUTZEN	7409720	200	2	385	10 55 216 1	VERROHRUNG HYDR
MISCHER	10144086	5	1	308	11 90 032 5	ABGASANLAGE
MITNEHMER	10348618	13	1	711	10 52 293 0	DW GEBER NRS
MITNEHMER EINBAU	10552681	20	1	18	11 24 047 9	OW KPL
MITTELTEIL KPL	11313908	12	1	443	11 89 364 8	UW KPL
MITTELZAPFEN	11940182	3	1	390	11 94 017 6	TRIEBWERK HYDRAULIKTEIL
MITTELZAPFEN	7024275	113	1	621	51 02 322 14	OELMOTOR
MODEM KPL NRS	11223226	10	1	613	11 90 722 6	MODEM NRS
MODEM NRS	11907226	438	1	3	01 38 376 14	LR 1300 SX
MODUL BETANKUNGSANLAG	10521559	11	1	720	10 52 155 4	BETANKUNGSANLAGE NRS
MODULBAUGRUPPENTRAEGE	916793914	1	2	81	10 56 069 4	MODULE EINBAU
MODULE EINBAU	10560694	49	1	18	11 24 047 9	OW KPL
MONITOR KABINE ANBAU	10578486	10	1	699	10 58 064 7	VIDEOUEBERWACHUNGSANL
MONITOR LCD	11240503	1	1	696	10 53 352 4	KABINE EL
MONITOR LCD KPL	11260077	24	1	414	11 26 095 7	STEUERSTAND RE
MONTAGEEINHEIT	11937499	10	1	547	11 24 570 5	ZWISCHENSTUECK MONTAGE
MONTAGEEINHEIT	11937501	10	1	565	11 24 571 1	ZWISCHENSTUECK MONTAGE
MONTAGEEINHEIT	11937504	10	1	572	11 24 571 7	ZWISCHENSTUECK MONTAGE
MONTAGEEINHEIT	11940878	10	1	558	11 94 087 6	TRANSPORTSICHERUNG
MONTAGEPLATTE	10526962	21	1	406	10 55 963 5	SCHALTSCHR X1
MONTAGETEILE	10526560	11	1	338	99 23 386 14	BALLASTGEWICHT ANORD
MONTAGETEILE	11265572	11	1	70	11 27 315 5	ZENTRALSCHMIERUNG
MONTAGETEILE	11283576	2	1	583	99 06 461 14	WINDMESSER KPL
MONTAGETEILE	11286299	11	1	578	11 24 132 4	AL KOPF KPL
MONTAGEWERKZEUG	11949368	80	1	505	10 56 183 8	WERKZEUG
MOTOR	592293214	52	1	432	11 93 934 6	KLIMAANLAGE
MOTOR	592293214	60	1	433	10 58 467 1	WASSERVENTIL
MOTORABDECKUNG	10545910	2	1	313	11 24 409 0	VERKLEIDUNG OW EINBAU KP
MOTORFLANSCH		75	1	352	93 88 497 01	PLANETENGETRIEBE
MOTORFLANSCH	540273014	7	1	629	54 02 705 14	ANTRIEB KPL
MOTORFLANSCH	927564101	85	1	396	90 01 376 2	DREHWERKANTRIEB
MOTORHALTER	11267559	26	1	198	10 57 423 7	KUEHLER MOTOR
MOTORLAGER KPL	11241138	12	1	92	11 24 048 0	ZENTRALAGGREGAT
MOTORREGELUNGSENSORIK	10142977	581	1	225	12 42 545 4	DIESELMOTOR
MOTORSTEUERGERAET	10883842	1	1	304	12 42 558 9	MOTORSTEUERGERAET
MOTORSTEUERGERAET	12425589	570	1	225	12 42 545 4	DIESELMOTOR
MUFFE	10447748	4	6	42	10 44 510 5	SCHNELLVERSCHLUSSKUPPL
MUFFE	10447748	4	4	457	10 44 510 2	SCHNELLVERSCHLUSSKUPPL
MUFFE	10447748	4	4	458	10 44 510 1	SCHNELLVERSCHLUSSKUPPL
MUTTER LWN 8-60-106 M33 10	412705014	12	80	441	10 51 969 6	VERBINDUNG OW UW
MUTTER M18X1.5 9SMNPB28K	9278873	11	1	125	92 78 875	DRUCKABSCHNEIDUNG
MUTTER M22X1.5 11SMNPB30	9072969	13	1	160	10 12 226 5	DS REGELVENTIL
MUTTER M24X1 9SMNPB28K	9077401	28	1	160	10 12 226 5	DS REGELVENTIL
NABE	10120188	7	1	256	10 13 382 3	ABSAUGPUMPE VORM.
NABE	11293193	6	1	457	10 44 510 2	SCHNELLVERSCHLUSSKUPPL
NADELEINZIEHWINDE	10519697	23	1	2	01 38 376 14	LR 1300 SX
NADELEINZIEHWINDE HYDR	10519698	2	1	343	10 51 969 7	NADELEINZIEHWINDE
NADELKAEFIG	747462814	20	1	628	54 02 704 14	ABTRIEB KPL
NADELN	540244214	14	72	625	54 02 701 14	PLANETENSTUFE
NADELN	540271114	24	48	625	54 02 701 14	PLANETENSTUFE
NAEHERUNGSSCHALTER	693067614	11	2	579	10 53 141 3	AL KOPF EL
NIVEAUGEBER	10134517	22	1	223	12 42 545 4	DIESELMOTOR
NIVEAUGEBER	10528589	18	1	65	10 56 073 3	KRAFTSTOFFTANK KPL
NIVEAUGEBER	10529210	14	1	60	10 56 070 1	TANK HYDR KPL
NIVEAUGEBER	11088130	1	1	238	10 13 451 7	NIVEAUGEBER
NIVEAUSONDE	10517426	81	1	46	11 24 519 0	OW EL
NOCKENENDSCHALTER	606281014	45	1	45	11 24 519 0	OW EL
NOCKENWELLE KPL.	10138231	100	1	223	12 42 545 4	DIESELMOTOR
NOT-AUS TASTER	10875360	39	3	45	11 24 519 0	OW EL
NOT-AUS TASTER	693073014	33	1	414	11 26 095 7	STEUERSTAND RE

Bezeichnung	Artikel	Pos.	Menge	Blatt	Baugruppe	Bezeichnung
NOT-AUS TASTER	693073014	33	1	724	10 52 155 9	MODUL BETANKUNGSANLAG
NOTBETRIEB EL NRS	11250162	447	1	3	01 38 376 14	LR 1300 SX
NUTENSTEIN	9076196	18	1	151	10 12 224 5	RS HEBEL
NUTMUTTER M120X2 C45	927509501	13	1	396	90 01 376 2	DREHWERKANTRIEB
NUTRING	10352315	55	1	685	59 21 826 14	ABSTUETZZYLINDER
NUTRING	726306414	10	1	703	59 20 008 14	DOPPELWIRKZYL
NUTRING	726307914	10	1	39	51 33 139 14	DOPPELWIRKZYL
NUTRING	726308514	85	1	685	59 21 826 14	ABSTUETZZYLINDER
NUTRING	790354114	5	1	716	51 03 361 14	EINFACHWIRKZYL
O-RING		13	1	352	93 88 497 01	PLANETENGETRIEBE
O-RING		19	2	352	93 88 497 01	PLANETENGETRIEBE
O-RING		22	1	352	93 88 497 01	PLANETENGETRIEBE
O-RING		51	1	352	93 88 497 01	PLANETENGETRIEBE
O-RING		61	1	352	93 88 497 01	PLANETENGETRIEBE
O-RING		73	1	352	93 88 497 01	PLANETENGETRIEBE
O-RING		76	1	352	93 88 497 01	PLANETENGETRIEBE
O-RING		78	8	352	93 88 497 01	PLANETENGETRIEBE
O-RING	10002167	4	2	284	10 14 821 5	THERMOSTATGEHAEUSE AN
O-RING	10002309	24	1	145	10 12 224 8	RS ZUSATZTEILE
O-RING	10002309	24	1	158	10 13 803 3	DICHTSATZ KPL.
O-RING	10002310	3	1	12	11 41 737 0	LUFTPRESSER
O-RING	10004261	9	1	228	10 14 768 6	AGGREGATETRAEGER ANBA
O-RING	10016874	17	2	157	10 12 226 2	RS VERSTELLUNG
O-RING	10016947	28	2	159	10 13 803 4	DS ANSCHLUSSPLATTE
O-RING	10097551	4	1	111	11 26 744 7	WECHSELVENTIL
O-RING	10115240	27	1	455	11 22 473 8	VERSTELLUNG
O-RING	10116255	1	1	278	10 29 998 8	HEIZFLANSCH VORM.
O-RING	10128559	2	1	260	10 15 278 7	DS HOCHDRUCKPUMPE
O-RING	10128671	1	1	260	10 15 278 7	DS HOCHDRUCKPUMPE
O-RING	10128678	3	1	260	10 15 278 7	DS HOCHDRUCKPUMPE
O-RING	10130757	2	1	264	10 13 508 0	DRUCKROHRSTUTZEN
O-RING	10217777	2	1	301	10 12 843 9	VERSCHLUSSTEILE
O-RING	10218370	2	1	297	11 38 664 5	STARTER
O-RING	10218953	3	1	62	10 51 572 4	RUECKLAUFFILTER
O-RING	10225991	10	1	182	51 14 145 14	DRUCKBEGRENZUNGSVENTI
O-RING	10282774	4	2	227	10 15 445 8	ZYLINDER
O-RING	10340226	20	2	215	10 30 300 7	KRAFTSTOFFVORFILTER
O-RING	10350604	2	1	183	10 22 358 1	DRUCKFILTER
O-RING	10351605	22	1	168	11 22 127 4	PUMPENELEMENT
O-RING	10351605	22	1	174	10 35 161 0	DS KPL
O-RING	10351608	23	4	168	11 22 127 4	PUMPENELEMENT
O-RING	10351608	23	4	174	10 35 161 0	DS KPL
O-RING	10352356	105	3	685	59 21 826 14	ABSTUETZZYLINDER
O-RING	10352361	135	1	685	59 21 826 14	ABSTUETZZYLINDER
O-RING	10352362	145	1	685	59 21 826 14	ABSTUETZZYLINDER
O-RING	10548553	59	1	380	99 04 645 14	ANTRIEB
O-RING	10593504	320	2	98	11 24 682 0	VERTEILERGETRIEBE
O-RING	10802833	22	1	177	11 21 593 6	PUMPENELEMENT
O-RING	11008055	3	1	274	10 14 736 9	ANSAUGSTUTZEN ANBAU
O-RING	11066168	4	1	254	10 13 394 5	SCHMIEROELPUMPE
O-RING	11212730	10	1	109	11 06 730 4	ABSCHALTVENTIL
O-RING	11215707	23	4	177	11 21 593 6	PUMPENELEMENT
O-RING	11219374	8	1	112	11 21 935 0	PUMPENDECKEL
O-RING	11219376	10	1	114	11 21 991 8	LAGERFLANSCH
O-RING	11220389	24	1	168	11 22 127 4	PUMPENELEMENT
O-RING	11220389	24	1	174	10 35 161 0	DS KPL
O-RING	11221283	2	1	173	11 22 127 6	ADAPTER
O-RING	11224740	25	1	451	51 24 059 14	V.MOTOR
O-RING	11226084	90	1	387	51 14 347 14	DW SICHERUNGSBLOCK
O-RING	11226144	210	4	387	51 14 347 14	DW SICHERUNGSBLOCK

Bezeichnung	Artikel	Pos.	Menge	Blatt	Baugruppe	Bezeichnung
O-RING	11239916	4	1	671	51 16 404 14	SENKBREMSVENTIL
O-RING	11249804	9	1	450	11 89 617 8	DS
O-RING	11251423	8	2	450	11 89 617 8	DS
O-RING	11267377	6	1	102	11 21 992 7	DECKEL
O-RING	11267377	6	1	103	11 21 992 9	DECKEL
O-RING	11267418	9	1	107	10 59 347 4	DRUCKBEGRENZUNGSVENTI
O-RING	11267418	8	1	108	11 21 936 9	VERSCHLUSSATZ
O-RING	11910327	110	1	529	10 09 917 3	DOPPELWIRKZYL
O-RING	11940147	6	1	388	51 22 991 14	OELMOTOR
O-RING	510587908	26	1	191	10 57 532 2	ANSAUGROHR OEL KPL
O-RING	592293414	180	1	432	11 93 934 6	KLIMAANLAGE
O-RING	592293514	190	1	432	11 93 934 6	KLIMAANLAGE
O-RING	7000329	23	2	120	92 74 731	DS ANSCHLUSSGEHAEUSE
O-RING	7004512	32	1	115	10 11 834 9	DOPPELV.PUMPE
O-RING	7004512	32	1	138	92 76 408	DS DOPPELPUMPE
O-RING	7006213	9	1	108	11 21 936 9	VERSCHLUSSATZ
O-RING	7007492	10	1	107	10 59 347 4	DRUCKBEGRENZUNGSVENTI
O-RING	7009080	5	1	284	10 14 821 5	THERMOSTATGEHAEUSE AN
O-RING	7019733	2	1	172	70 19 834	ADAPTER
O-RING	7022118	29	2	159	10 13 803 4	DS ANSCHLUSSPLATTE
O-RING	7022118	14	1	451	51 24 059 14	V.MOTOR
O-RING	7028151	26	1	455	11 22 473 8	VERSTELLUNG
O-RING	704274808	70	5	532	51 14 755 14	DRUCKBEGRENZUNGSVENTI
O-RING	726401514	15	1	65	10 56 073 3	KRAFTSTOFFTANK KPL
O-RING	726403201	89	1	471	96 93 178 01	FAHRANTRIEB
O-RING	726403514	18	1	41	51 05 719 14	SCHNELLVERSCHRAUBUNG
O-RING	726404414	20	4	192	10 58 017 0	RUECKLAUFROHR
O-RING	726408414	19	1	41	51 05 719 14	SCHNELLVERSCHRAUBUNG
O-RING	726409714	27	1	191	10 57 532 2	ANSAUGROHR OEL KPL
O-RING	726409814	24	3	60	10 56 070 1	TANK HYDR KPL
O-RING	726410201	79	1	471	96 93 178 01	FAHRANTRIEB
O-RING	726411214	29	3	94	11 24 773 5	AGGREGAT HYDR
O-RING	7264148	24	1	396	90 01 376 2	DREHWERKANTRIEB
O-RING	726424214	16	1	629	54 02 705 14	ANTRIEB KPL
O-RING	726428401	91	1	471	96 93 178 01	FAHRANTRIEB
O-RING	726428714	25	2	60	10 56 070 1	TANK HYDR KPL
O-RING	726429814	5	1	111	11 26 744 7	WECHSELVENTIL
O-RING	726431414	25	2	191	10 57 532 2	ANSAUGROHR OEL KPL
O-RING	726431414	29	1	191	10 57 532 2	ANSAUGROHR OEL KPL
O-RING	726435801	68	1	396	90 01 376 2	DREHWERKANTRIEB
O-RING	726450601	6	2	471	96 93 178 01	FAHRANTRIEB
O-RING	726453901	69	1	396	90 01 376 2	DREHWERKANTRIEB
O-RING	726456214	58	1	380	99 04 645 14	ANTRIEB
O-RING	726456914	8	1	39	51 33 139 14	DOPPELWIRKZYL
O-RING	726456914	8	1	703	59 20 008 14	DOPPELWIRKZYL
O-RING	726459414	12	1	451	51 24 059 14	V.MOTOR
O-RING	726461014	24	2	446	11 89 300 5	VERROHRUNG HYDR
O-RING	726461714	9	2	385	10 55 216 1	VERROHRUNG HYDR
O-RING	7264625	1	1	236	50 04 624	OELABLASSSCHRAUBE
O-RING	726466314	180	1	86	59 21 041 14	DOPPELWIRKZYL
O-RING	726469014	70	1	627	54 02 703 14	FLANSCH KPL
O-RING	7372232	3	1	392	10 65 027 0	VERSCHLUSSRING
O-RING	7380015	22	2	120	92 74 731	DS ANSCHLUSSGEHAEUSE
O-RING	7380083	3	1	286	10 14 274 2	KUEHLMITTELKRUEMMER AN
O-RING	7380120	28	2	120	92 74 731	DS ANSCHLUSSGEHAEUSE
O-RING	7380297	39	1	148	10 13 802 7	RS WELLE
O-RING	7380297	39	1	156	10 13 803 2	RS VERSCHLUSSRING
O-RING	7380297	31	1	158	10 13 803 3	DICHTSATZ KPL.
O-RING	7380297	21	1	164	10 13 452 1	DURCHTRIEB
O-RING	7380348	24	2	120	92 74 731	DS ANSCHLUSSGEHAEUSE

Bezeichnung	Artikel	Pos.	Menge	Blatt	Baugruppe	Bezeichnung
O-RING	7380423	12	1	235	10 15 529 8	OELWANNE VORM.
O-RING	7380574	18	1	157	10 12 226 2	RS VERSTELLUNG
O-RING	7380576	27	1	160	10 12 226 5	DS REGELVENTIL
O-RING	7380596	81	1	122	92 73 644	DS REGELVENTIL
O-RING	7380601	22	1	162	10 13 000 5	DURCHTRIEB
O-RING	7380601	22	1	164	10 13 452 1	DURCHTRIEB
O-RING	7380605	22	1	161	10 12 987 4	DURCHTRIEB
O-RING	7380605	40	1	202	11 24 114 1	KUEHLER EINBAU LADELUFT
O-RING	7380605	5	1	275	10 14 736 4	LUFTANSAUGUNG ANBAU
O-RING	7380608	26	1	160	10 12 226 5	DS REGELVENTIL
O-RING	7380610	23	2	159	10 13 803 4	DS ANSCHLUSSPLATTE
O-RING	7380612	65	1	122	92 73 644	DS REGELVENTIL
O-RING	7380648	32	10	120	92 74 731	DS ANSCHLUSSGEHAEUSE
O-RING	7380648	64	5	121	90 74 418	REGELVENTIL
O-RING	7380648	64	5	122	92 73 644	DS REGELVENTIL
O-RING	7380653	8	2	228	10 14 768 6	AGGREGATETRAEGER ANBA
O-RING	7380653	9	1	299	10 11 557 7	SCHWUNGRADGEHAEUSE AN
O-RING	7380656	18	1	127	90 77 464	RS FLANSCH
O-RING	7380656	18	4	138	92 76 408	DS DOPPELPUMPE
O-RING	7380657	36	1	136	92 68 016	RS VERSCHLUSSRING
O-RING	7380657	2	1	307	10 14 637 4	VERSCHLUSSTEILE
O-RING	7380691	22	1	163	10 13 235 7	ANBAUSATZ DURCHTRIEB
O-RING	7380691	22	1	165	10 13 806 8	DURCHTRIEB
O-RING	7380865	62	1	122	92 73 644	DS REGELVENTIL
O-RING	7380868	70	1	122	92 73 644	DS REGELVENTIL
O-RING	7380868	70	1	129	92 75 443	RS DECKEL
O-RING	7380888	56	2	120	92 74 731	DS ANSCHLUSSGEHAEUSE
O-RING	7380888	61	1	121	90 74 418	REGELVENTIL
O-RING	7380888	61	1	122	92 73 644	DS REGELVENTIL
O-RING	7380935	2	1	278	10 29 998 8	HEIZFLANSCH VORM.
O-RING	7380955	9	2	252	10 12 948 0	OELKUEHLER VORM.
O-RING	7380970	41	1	202	11 24 114 1	KUEHLER EINBAU LADELUFT
O-RING	7380970	7	1	276	10 14 967 6	VERBINDUNGSLEITUNG ANBA
O-RING	7380986	12	1	215	10 30 300 7	KRAFTSTOFFVORFILTER
O-RING	7380987	21	1	160	10 12 226 5	DS REGELVENTIL
O-RING	7381004	70	1	137	92 73 187	RS MAGNET
O-RING	7381013	23	2	145	10 12 224 8	RS ZUSATZTEILE
O-RING	7381013	23	2	158	10 13 803 3	DICHTSATZ KPL.
O-RING	7381056	24	1	122	92 73 644	DS REGELVENTIL
O-RING	7381056	24	1	125	92 78 875	DRUCKABSCHNEIDUNG
O-RING	7381082	82	1	122	92 73 644	DS REGELVENTIL
O-RING	7381087	63	1	122	92 73 644	DS REGELVENTIL
O-RING	7381103	60	1	122	92 73 644	DS REGELVENTIL
O-RING	7381103	2	1	302	10 12 797 9	VERSCHLUSSTEILE
O-RING	7381127	21	1	154	10 12 352 8	STOPFEN
O-RING	7381127	21	1	159	10 13 803 4	DS ANSCHLUSSPLATTE
O-RING	7381128	20	1	154	10 12 352 8	STOPFEN
O-RING	7381128	22	1	159	10 13 803 4	DS ANSCHLUSSPLATTE
O-RING	7381438	12	1	143	10 12 321 4	DS DRUCKREDUZIERVENTIL
O-RING	7381439	11	1	143	10 12 321 4	DS DRUCKREDUZIERVENTIL
O-RING	7381440	10	1	143	10 12 321 4	DS DRUCKREDUZIERVENTIL
O-RING	7381442	23	1	122	92 73 644	DS REGELVENTIL
O-RING	7381442	23	1	125	92 78 875	DRUCKABSCHNEIDUNG
O-RING	7381446	22	1	160	10 12 226 5	DS REGELVENTIL
O-RING	7381526	4	1	287	10 14 274 4	KUEHLWASSERENTLUEFTUN
O-RING	7381593	7	2	232	10 14 201 8	KURBELGEHAEUSEENTLUEF
O-RING	7381615	9	1	288	10 14 601 2	WASSERSAMMELLEITUNG K
O-RING	7381685	4	1	255	10 13 394 7	ABSAUGPUMPE MIT BEFEST.
O-RING	7381779	7	2	228	10 14 768 6	AGGREGATETRAEGER ANBA
O-RING	7381779	5	2	288	10 14 601 2	WASSERSAMMELLEITUNG K

Bezeichnung	Artikel	Pos.	Menge	Blatt	Baugruppe	Bezeichnung
O-RING	7382059	5	1	254	10 13 394 5	SCHMIEROELPUMPE
O-RING	7412937	15	1	215	10 30 300 7	KRAFTSTOFFVORFILTER
O-RING	761032203	73	1	396	90 01 376 2	DREHWERKANTRIEB
O-RING	790311914	30	1	94	11 24 773 5	AGGREGAT HYDR
O-RING	790347014	330	1	98	11 24 682 0	VERTEILERGETRIEBE
O-RING	790353814	6	1	716	51 03 361 14	EINFACHWIRKZYL
O-RING	9177947	28	1	191	10 57 532 2	ANSAUGROHR OEL KPL
O-RING PLATTE	511486614	30	1	532	51 14 755 14	DRUCKBEGRENZUNGSVENTI
OELABLASSSCHRAUBE	5004624	8	1	235	10 15 529 8	OELWANNE VORM.
OELABLASSSCHRAUBE G1"X	403900714	17	4	60	10 56 070 1	TANK HYDR KPL
OELABLASSSCHRAUBE G1"X	403900714	16	1	65	10 56 073 3	KRAFTSTOFFTANK KPL
OELABLASSSCHRAUBE G1"X	403900714	33	2	191	10 57 532 2	ANSAUGROHR OEL KPL
OELABLASSSCHRAUBE G1"X	403900714	41	1	195	11 24 114 0	KUEHLER EINBAU WASSER
OELABLASSSCHRAUBE M22X	511442214	27	1	94	11 24 773 5	AGGREGAT HYDR
OELEINFUELLSTUTZEN	927693401	95	1	396	90 01 376 2	DREHWERKANTRIEB
OELKUEHLER	10352185	1	1	43	10 22 592 5	KUEHLER MOTOR
OELKUEHLER	5700088	2	1	252	10 12 948 0	OELKUEHLER VORM.
OELKUEHLER ANBAU	10129481	130	1	223	12 42 545 4	DIESELMOTOR
OELKUEHLER EINBAU	10519616	14	1	18	11 24 047 9	OW KPL
OELKUEHLER VORM.	10129480	1	1	251	10 12 948 1	OELKUEHLER ANBAU
OELKUEHLERGEHAEUSE	10129479	1	1	252	10 12 948 0	OELKUEHLER VORM.
OELLEITUNG	10583845	4	1	365	10 55 156 3	WINDE
OELLEITUNG	11893216	6	1	489	10 53 039 8	WINDE
OELLEITUNG VORM.	10146716	25	1	223	12 42 545 4	DIESELMOTOR
OELMESSEINRICHTUNG	933675501	10	1	349	96 96 248 01	WINDE
OELMESSSTAB	10145918	2	1	237	10 14 591 9	OELMESSSTAB MIT ROHR
OELMESSSTAB	11290849	180	1	98	11 24 682 0	VERTEILERGETRIEBE
OELMESSSTAB	927610201	15	1	356	93 36 755 01	OELMESSEINRICHTUNG
OELMESSSTAB KPL.	10142567	4	1	193	11 24 113 9	ANBAUTEILE DIESELMOTOR
OELMESSSTAB MIT ROHR	10145919	21	1	223	12 42 545 4	DIESELMOTOR
OELMOTOR	510232214	2	1	620	10 51 726 2	VERROHRUNG HYDR
OELMOTOR	512239414	5	1	203	10 57 423 9	KUEHLER MOTOR
OELMOTOR	512250114	6	1	198	10 57 423 7	KUEHLER MOTOR
OELMOTOR	512252714	2	1	345	10 51 969 8	NADELEINZIEHWINDE HYDR
OELMOTOR	512294214	2	1	362	10 51 968 7	HAUPT EZW HYDR
OELMOTOR	512299114	3	2	385	10 55 216 1	VERROHRUNG HYDR
OELMOTOR	550945314	6	1	43	10 22 592 5	KUEHLER MOTOR
OELRUECKLAUFLEITUNG	10131350	1	1	239	10 14 671 6	OELLEITUNG VORM.
OELRUECKLAUFLEITUNG	10140138	17	1	292	10 14 013 6	ATL-ANBAU
OELSCHAUGLAS	10022192	24	1	356	93 36 755 01	OELMESSEINRICHTUNG
OELSCHAUGLAS	11287761	16	1	200	11 28 734 7	AUSGLEICHSBEHAELTER
OELSCHAUGLAS	774322101	77	2	396	90 01 376 2	DREHWERKANTRIEB
OELSTANDSAUGE	5106280	18	4	60	10 56 070 1	TANK HYDR KPL
OELWANNE	10155297	1	1	235	10 15 529 8	OELWANNE VORM.
OELWANNE MIT BEFEST.	10148444	20	1	223	12 42 545 4	DIESELMOTOR
OELWANNE VORM.	10155298	1	1	234	10 14 844 4	OELWANNE MIT BEFEST.
OMNIFIT	7016208	106	1	147	10 13 802 6	RS ZYL.+STEUERPL.+WELLE
OMNIFIT	7016208	106	1	153	10 14 131 6	ANSCHLUSSPLATTE VORM.
OW DREHVERBINDUNG EINBA	10519631	21	1	18	11 24 047 9	OW KPL
OW EL	11245190	3	1	18	11 24 047 9	OW KPL
OW EL	11931930	100	1	15	11 93 192 6	UMBAU EL NRS
OW HYDR	11296186	2	1	18	11 24 047 9	OW KPL
OW KPL	11240479	5	1	2	01 38 376 14	LR 1300 SX
PAPIERVLIES	10350585	1	1	66	11 28 086 8	BELUEFTUNGSFILTER
PASSFEDER DIN 6885 B28X1	571827308	400	8	98	11 24 682 0	VERTEILERGETRIEBE
PASSFEDER DIN 6885 B32X18	485529814	410	2	98	11 24 682 0	VERTEILERGETRIEBE
PASSFEDER DIN 6885 B8X7X1	10567120	450	1	98	11 24 682 0	VERTEILERGETRIEBE
PASSHUELSE 16X20X20	10134348	3	2	228	10 14 768 6	AGGREGATETRAEGER ANBA
PASSHUELSE 16X20X20 S235	9074798	3	2	299	10 11 557 7	SCHWUNGRADGEHAEUSE AN
PASSSCHEIBE	10007971	3	1	452	10 50 351 3	TRIEBWERK

Bezeichnung	Artikel	Pos.	Menge	Blatt	Baugruppe	Bezeichnung
PASSSCHEIBE 55X65X1.5 ST	7380531	44	1	136	92 68 016	RS VERSCHLUSSRING
PASSSCHEIBE 70X95X0.5	10475718	4	1	392	10 65 027 0	VERSCHLUSSRING
PASSSCHEIBE DIN 988 16X22	422014001	23	3	629	54 02 705 14	ANTRIEB KPL
PASSSCHEIBE DIN 988 50X62X	4002229	44	1	156	10 13 803 2	RS VERSCHLUSSRING
PENDEL	990627014	23	1	584	10 59 863 3	PENDEL KPL
PENDEL KPL	10598633	1	1	583	99 06 461 14	WINDMESSER KPL
PENDELROLLENLAGER	746001701	16	1	350	93 88 500 01	SEILTROMMEL
PILZKNOPF	592289914	73	1	420	10 35 008 0	KABINE
PL FALLE	10348527	13	1	599	79 03 862 14	LASTHAKEN
PLANETENACHSE	540271414	28	3	625	54 02 701 14	PLANETENSTUFE
PLANETENACHSE	540272614	2	3	628	54 02 704 14	ABTRIEB KPL
PLANETENGETRIEBE	938849701	5	1	349	96 96 248 01	WINDE
PLANETENRAD		7	5	352	93 88 497 01	PLANETENGETRIEBE
PLANETENRAD		32	3	352	93 88 497 01	PLANETENGETRIEBE
PLANETENRAD		42	3	352	93 88 497 01	PLANETENGETRIEBE
PLANETENRAD	540270614	12	3	625	54 02 701 14	PLANETENSTUFE
PLANETENRAD	540271014	22	3	625	54 02 701 14	PLANETENSTUFE
PLANETENRAD	927562601	20	5	396	90 01 376 2	DREHWERKANTRIEB
PLANETENRAD	927596701	40	3	396	90 01 376 2	DREHWERKANTRIEB
PLANETENRAD	927651501	55	3	396	90 01 376 2	DREHWERKANTRIEB
PLANETENRAD	944404303	18	5	471	96 93 178 01	FAHRANTRIEB
PLANETENRAD	944404403	1	1	472	94 44 043 03	PLANETENRAD
PLANETENRAD	944404803	28	3	471	96 93 178 01	FAHRANTRIEB
PLANETENRAD	944404903	1	1	473	94 44 048 03	PLANETENRAD
PLANETENRAD	944406503	38	3	471	96 93 178 01	FAHRANTRIEB
PLANETENRAD	944406603	1	1	474	94 44 065 03	PLANETENRAD
PLANETENRAD	944434703	48	3	471	96 93 178 01	FAHRANTRIEB
PLANETENSTUFE	11893250	2	1	491	11 89 322 8	REPARATURSATZ
PLANETENSTUFE	11893252	4	1	491	11 89 322 8	REPARATURSATZ
PLANETENSTUFE	540270114	1	1	624	59 20 694 14	WINDE
PLANETENTRAEGER		30	1	352	93 88 497 01	PLANETENGETRIEBE
PLANETENTRAEGER		40	1	352	93 88 497 01	PLANETENGETRIEBE
PLANETENTRAEGER	540271314	27	1	625	54 02 701 14	PLANETENSTUFE
PLANETENTRAEGER	540272514	1	1	628	54 02 704 14	ABTRIEB KPL
PLANETENTRAEGER	90022085	15	1	396	90 01 376 2	DREHWERKANTRIEB
PLANETENTRAEGER	927597201	35	1	396	90 01 376 2	DREHWERKANTRIEB
PLANETENTRAEGER	927651401	50	1	396	90 01 376 2	DREHWERKANTRIEB
PLANETENTRAEGER	944403903	15	1	471	96 93 178 01	FAHRANTRIEB
PLANETENTRAEGER	944404603	25	1	471	96 93 178 01	FAHRANTRIEB
PLANETENTRAEGER	944406403	35	1	471	96 93 178 01	FAHRANTRIEB
PLANETENTRAEGER	969392201	45	1	471	96 93 178 01	FAHRANTRIEB
PLATTE	10098789	22	1	331	11 24 922 2	ABDECKUNG UNTERSEITE
PLATTE	10099005	1	1	373	99 29 389 14	SEITENTEIL
PLATTE	10099005	1	1	374	99 29 392 14	SEITENTEIL
PLATTE	10099009	3	10	376	99 29 386 14	KONSOLE KPL
PLATTE	10099009	3	10	377	99 29 434 14	KONSOLE KPL
PLATTE	10119129	1	1	300	10 11 912 8	VERSCHLUSSTEILE
PLATTE	10225695	37	2	313	11 24 409 0	VERKLEIDUNG OW EINBAU KP
PLATTE	10226477	24	1	423	10 35 007 6	SCHIEBETUER
PLATTE	10336707	1	3	376	99 29 386 14	KONSOLE KPL
PLATTE	10336707	1	3	377	99 29 434 14	KONSOLE KPL
PLATTE	10336708	2	8	376	99 29 386 14	KONSOLE KPL
PLATTE	10336708	2	8	377	99 29 434 14	KONSOLE KPL
PLATTE	10336722	4	3	376	99 29 386 14	KONSOLE KPL
PLATTE	10336722	4	3	377	99 29 434 14	KONSOLE KPL
PLATTE	10447259	39	1	421	10 22 645 4	TUERE ZUBEHOEHR
PLATTE	10522189	7	1	426	59 22 871 14	FRONTSCHEIBE KPL
PLATTE	10540513	24	2	666	11 23 619 7	SELBSTVERLADESYSTEM NR
PLATTE	10545918	10	1	313	11 24 409 0	VERKLEIDUNG OW EINBAU KP
PLATTE	10560687	10	1	331	11 24 922 2	ABDECKUNG UNTERSEITE

Bezeichnung	Artikel	Pos.	Menge	Blatt	Baugruppe	Bezeichnung
PLATTE	10560688	17	1	331	11 24 922 2	ABDECKUNG UNTERSEITE
PLATTE	10560690	16	1	331	11 24 922 2	ABDECKUNG UNTERSEITE
PLATTE	10560691	11	1	331	11 24 922 2	ABDECKUNG UNTERSEITE
PLATTE	10560692	12	1	331	11 24 922 2	ABDECKUNG UNTERSEITE
PLATTE	10583559	15	1	331	11 24 922 2	ABDECKUNG UNTERSEITE
PLATTE	10583611	19	1	331	11 24 922 2	ABDECKUNG UNTERSEITE
PLATTE	10583612	20	1	331	11 24 922 2	ABDECKUNG UNTERSEITE
PLATTE	10583642	51	1	315	11 24 409 0	VERKLEIDUNG OW EINBAU KP
PLATTE	10589204	58	2	510	11 23 820 3	ANLENKSTUECK KPL
PLATTE	11215379	10	1	616	11 21 552 4	WINKELANZEIGE NRS
PLATTE	11219851	12	2	563	11 23 292 2	AUFLAGE KPL
PLATTE	11219851	11	2	597	11 25 204 2	AUFLAGE KPL
PLATTE	11228227	25	1	666	11 23 619 7	SELBSTVERLADESYSTEM NR
PLATTE	11231673	19	2	581	11 28 629 9	MONTAGETEILE
PLATTE	11244094	28	1	313	11 24 409 0	VERKLEIDUNG OW EINBAU KP
PLATTE	11249223	13	1	331	11 24 922 2	ABDECKUNG UNTERSEITE
PLATTE	11249224	18	1	331	11 24 922 2	ABDECKUNG UNTERSEITE
PLATTE	11249225	21	1	331	11 24 922 2	ABDECKUNG UNTERSEITE
PLATTE	11249678	24	1	331	11 24 922 2	ABDECKUNG UNTERSEITE
PLATTE	11909496	140	1	432	11 93 934 6	KLIMAANLAGE
PLATTE	11913226	64	4	581	11 28 629 9	MONTAGETEILE
PLATTE	592072914	112	1	30	11 28 647 6	VENTILBLOCK
PLEUELLAGER	10145100	2	1	242	11 34 807 2	PLEUELSTANGE
PLEUELLAGER	10145101	3	1	242	11 34 807 2	PLEUELSTANGE
PLEUELSTANGE	11348054	1	1	242	11 34 807 2	PLEUELSTANGE
PLEUELSTANGE	11348072	60	6	223	12 42 545 4	DIESELMOTOR
PODEST	10512048	101	1	420	10 35 008 0	KABINE
PODEST	10512061	89	1	420	10 35 008 0	KABINE
PODEST	11245755	1	2	635	11 24 147 8	UW PODEST
PODEST	992671814	1	2	482	99 23 389 14	UW PODEST
PODESTSICHERUNG KPL	592291414	116	1	420	10 35 008 0	KABINE
PRATZE	10146415	1	1	266	10 13 543 4	BEFESTIGUNG DRUCKROHR
PRATZE	10150144	2	1	262	10 15 315 1	DRUCKROHRSTUTZEN
PRATZE	11403994	2	1	261	10 15 286 7	INJEKTOR MIT BEFEST.
PRATZE	11403994	1	1	265	10 13 543 2	BEFESTIGUNG INJEKTOR
PRESSKLEMME	773920008	26	6	584	10 59 863 3	PENDEL KPL
PRESSKLEMME	773920008	13	4	597	11 25 204 2	AUFLAGE KPL
PROFIL	592291114	97	1	420	10 35 008 0	KABINE
PROFILHOHLWELLE	10350230	130	2	98	11 24 682 0	VERTEILERGETRIEBE
PROFILHOHLWELLE	11253077	140	2	98	11 24 682 0	VERTEILERGETRIEBE
PROFILSCHELLE	10141051	30	1	309	11 40 371 1	SCR KPL.
PROFILSCHELLE	10494116	21	2	211	11 24 114 3	ABGASANLAGE
PROFILSCHELLE	10494116	21	2	308	11 90 032 5	ABGASANLAGE
PROFILSCHELLE	10494117	22	2	308	11 90 032 5	ABGASANLAGE
PROFILSCHNUR	501507014	13	1	626	54 02 702 14	SEILTROMMEL KPL
PROPORTIONALMAGNET	11219375	2	2	113	11 21 991 7	STEUERGERAET
PUFFER	10567622	31	4	195	11 24 114 0	KUEHLER EINBAU WASSER
PUFFER	592286814	13	1	419	10 35 008 0	KABINE
PULTABLAGE	970857103	32	1	313	11 24 409 0	VERKLEIDUNG OW EINBAU KP
PUMPE	11373478	3	1	217	11 24 114 5	ANLAGE HARNSTOFF EINBAU
PUMPENDECKEL	11219350	4	1	99	10 53 430 7	V.PUMPE
PUMPENELEMENT	10540347	1	1	72	11 22 312 3	ZENTRALSCHMIERPUMPE
PUMPENELEMENT	11215913	1	1	175	10 22 601 3	V.PUMPE
PUMPENELEMENT	11215936	1	1	176	11 21 591 3	PUMPENELEMENT
PUMPENELEMENT	11221268	1	1	166	10 22 650 5	V.PUMPE
PUMPENELEMENT	11221274	1	1	167	11 22 126 8	PUMPENELEMENT
PUMPENGEHAEUSE	10132069	1	1	256	10 13 382 3	ABSAUGPUMPE VORM.
PUMPENGEHAEUSE	11219910	3	1	99	10 53 430 7	V.PUMPE
PUMPENGEHAEUSE	11219930	1	1	104	11 21 991 0	PUMPENGEHAEUSE
QUERGRIFF 1 "	885391814	50	1	504	10 56 187 5	WERKZEUGAUSRUESTUNG

Bezeichnung	Artikel	Pos.	Menge	Blatt	Baugruppe	Bezeichnung
QUERTRAEGER SCHWK	10557217	11	1	647	10 55 601 0	STURZSICHERUNG NRS
QUERVERBINDER	602731714	51	1	51	10 56 645 8	KLEMMKASTEN
QUERVERBINDER	602812414	88	1	406	10 55 963 5	SCHALTSCHR X1
QUERVERBINDER	693138614	73	1	406	10 55 963 5	SCHALTSCHR X1
RADIALWELLENDICHTRING		11	1	352	93 88 497 01	PLANETENGETRIEBE
RADIALWELLENDICHTRING		63	2	352	93 88 497 01	PLANETENGETRIEBE
RADIALWELLENDICHTRING	10014510	35	1	136	92 68 016	RS VERSCHLUSSRING
RADIALWELLENDICHTRING	11950212	53	1	380	99 04 645 14	ANTRIEB
RADIALWELLENDICHTRING	710022201	64	2	396	90 01 376 2	DREHWERKANTRIEB
RADIALWELLENDICHTRING	710029801	18	1	350	93 88 500 01	SEILTROMMEL
RADIALWELLENDICHTRING	710048501	17	1	350	93 88 500 01	SEILTROMMEL
RADIALWELLENDICHTRING	710054401	4	1	396	90 01 376 2	DREHWERKANTRIEB
RADIALWELLENDICHTRING	710058901	11	2	396	90 01 376 2	DREHWERKANTRIEB
RADIO NRS	10592569	14	1	2	01 38 376 14	LR 1300 SX
RAHMEN	10566842	1	1	317	11 24 409 1	VERKLEIDUNG
RAHMEN	11236714	7	1	706	11 21 750 0	VERFLUESSIGER
RAHMEN	11244092	2	1	317	11 24 409 1	VERKLEIDUNG
RAHMEN	11281448	1	1	426	59 22 871 14	FRONTSCHEIBE KPL
RAHMEN	602481914	1	1	415	91 65 251 14	KABELDURCHFUEHRUNG KAB
RAHMEN KPL	11247688	1	1	188	11 24 113 8	MOTORLAGER KPL
RAHMEN SCHWK	10578321	12	1	77	10 58 163 4	KABINENAUFHAENGUNG KPL
RASTBOLZEN M10X1	540272414	60	1	627	54 02 703 14	FLANSCH KPL
RASTHUELSE	540272314	33	1	627	54 02 703 14	FLANSCH KPL
RASTVORRICHTUNG KPL	7025007	23	1	435	70 24 996	SITZRAHMEN
RAUPENTRAEGER LI KPL	11893651	11	1	443	11 89 364 8	UW KPL
RAUPENTRAEGER LI SCHWK	11893687	1	1	478	11 89 365 1	RAUPENTRAEGER LI KPL
RAUPENTRAEGER RE KPL	11893650	10	1	443	11 89 364 8	UW KPL
RAUPENTRAEGER RE SCHWK	11893689	1	1	467	11 89 365 0	RAUPENTRAEGER RE KPL
RECHTECKRING	10472425	109	18	22	11 29 618 6	OW HYDR
RECHTECKRING	10472425	70	3	94	11 24 773 5	AGGREGAT HYDR
RECHTECKRING	10472425	616	2	362	10 51 968 7	HAUPT EZW HYDR
RECHTECKRING	10472425	631	10	448	11 89 300 5	VERROHRUNG HYDR
RECHTECKRING	10472425	740	5	486	11 26 260 6	WINDE 1 HYDR
RECHTECKRING	10472425	740	5	501	11 26 261 1	WINDE 2 HYDR
RECHTECKRING	10490781	110	19	22	11 29 618 6	OW HYDR
RECHTECKRING	10490781	72	2	94	11 24 773 5	AGGREGAT HYDR
RECHTECKRING	10490781	630	2	345	10 51 969 8	NADELEINZIEHWINDE HYDR
RECHTECKRING	10490781	641	2	385	10 55 216 1	VERROHRUNG HYDR
RECHTECKRING	10490784	106	4	22	11 29 618 6	OW HYDR
RECHTECKRING	10490784	71	13	94	11 24 773 5	AGGREGAT HYDR
RECHTECKRING	10490784	640	4	385	10 55 216 1	VERROHRUNG HYDR
RECHTECKRING	10490784	660	1	528	10 51 959 1	VERROHRUNG HYDR
RECHTECKRING	10490784	615	1	668	10 51 973 8	SELBSTVERLADESYSTEM H
RECHTECKRING	10490785	107	4	22	11 29 618 6	OW HYDR
RECHTECKRING	10490787	108	5	22	11 29 618 6	OW HYDR
REDUZIERSTUECK	11234129	285	1	30	11 28 647 6	VENTILBLOCK
REDUZIERSTUECK	602604314	56	1	725	10 52 155 9	MODUL BETANKUNGSANLAG
REDUZIERSTUTZEN	11290857	540	1	98	11 24 682 0	VERTEILERGETRIEBE
REDUZIERUNG	11946457	330	1	432	11 93 934 6	KLIMAANLAGE
REDUZIERUNG	260493402	33	1	595	97 14 959 03	SPITZENENDSCHALTER EL
REDUZIERUNG	260493702	46	1	516	11 90 151 1	KABELSATZ 1 ANLENKSTUECK
REGELVENTIL	10127478	7	1	139	10 12 878 7	V.PUMPE
REGELVENTIL	10127479	10	1	144	10 12 747 8	REGELVENTIL
REGELVENTIL	11362187	4	1	139	10 12 878 7	V.PUMPE
REGELVENTIL	9074418	4	2	115	10 11 834 9	DOPPELV.PUMPE
REIHENKLEMME	10550739	75	22	406	10 55 963 5	SCHALTSCHR X1
REIHENKLEMME	602125114	22	7	51	10 56 645 8	KLEMMKASTEN
REIHENKLEMME	602151914	86	4	406	10 55 963 5	SCHALTSCHR X1
REIHENKLEMME	602153814	23	39	51	10 56 645 8	KLEMMKASTEN
REIHENKLEMME	602153814	74	13	406	10 55 963 5	SCHALTSCHR X1

Bezeichnung	Artikel	Pos.	Menge	Blatt	Baugruppe	Bezeichnung
REIHENKLEMME	602153814	80	4	406	10 55 963 5	SCHALTSCHR X1
REIHENKLEMME	693181114	71	3	406	10 55 963 5	SCHALTSCHR X1
RELAIS	10226635	21	1	184	11 24 448 7	ZENTRALAGGREGAT EL
RELAIS	630160214	41	2	724	10 52 155 9	MODUL BETANKUNGSANLAG
RELAIS STECKSOCKEL	630122908	84	1	406	10 55 963 5	SCHALTSCHR X1
REPARATURSATZ	11231317	3	1	491	11 89 322 8	REPARATURSATZ
REPARATURSATZ	11231319	5	1	491	11 89 322 8	REPARATURSATZ
REPARATURSATZ	11231322	1	1	492	11 23 126 9	SEILTROMMEL
REPARATURSATZ	11231336	1	1	493	11 23 127 0	FLANSCHLAGER
REPARATURSATZ	11233487	1	1	491	11 89 322 8	REPARATURSATZ
REPARATURSATZ	11253394	1	1	366	10 58 386 4	FLANSCH
REPARATURSATZ	11253398	1	1	367	10 55 597 3	SEILTROMMEL
REPARATURSATZ	11253401	1	1	368	10 58 386 5	GETRIEBE
REPARATURSATZ	11253440	1	1	369	10 58 384 5	OELLEITUNG
REPARATURSATZ	11893228	1	1	490	11 89 321 3	GETRIEBE
REPARATURSATZ	11893254	1	1	495	11 89 321 5	WINDENBOCK
REPARATURSATZ	11893255	1	1	496	11 89 321 6	OELLEITUNG
RESERVESICHERUNGEN	992081114	56	1	406	10 55 963 5	SCHALTSCHR X1
RIEGEL	10351784	14	1	321	10 57 883 5	TUER
RIEGEL	10351784	14	1	323	10 57 897 6	TUER
RIEGEL	10351784	14	1	325	10 57 940 0	TUER
RIEGEL	10351784	14	1	326	10 56 623 7	TUER
RIEGEL	10351784	16	1	327	10 56 580 8	TUER
RILLENKUGELLAGER		3	1	352	93 88 497 01	PLANETENGETRIEBE
RILLENKUGELLAGER	10350232	290	4	98	11 24 682 0	VERTEILERGETRIEBE
RILLENKUGELLAGER	10592555	30	1	380	99 04 645 14	ANTRIEB
RILLENKUGELLAGER	616155214	4	2	519	61 61 541 14	KABELTROMMEL
RILLENKUGELLAGER	745120514	20	2	640	99 10 116 14	SEILFUEHRUNG
RILLENKUGELLAGER	745128314	40	1	627	54 02 703 14	FLANSCH KPL
RILLENKUGELLAGER	745141001	66	1	396	90 01 376 2	DREHWERKANTRIEB
RILLENKUGELLAGER	745141814	280	6	98	11 24 682 0	VERTEILERGETRIEBE
RILLENKUGELLAGER	745194714	12	1	629	54 02 705 14	ANTRIEB KPL
RILLENKUGELLAGER	745906614	6	1	627	54 02 703 14	FLANSCH KPL
RILLENKUGELLAGER	745907514	23	1	628	54 02 704 14	ABTRIEB KPL
RILLENKUGELLAGER	746171514	18	2	361	10 51 968 6	EZW OW EINBAU KPL
RING		12	1	352	93 88 497 01	PLANETENGETRIEBE
RING	11220477	10	1	704	11 22 037 2	FUSSPEDAL EL EINBAU
RING	11267455	10	1	112	11 21 935 0	PUMPENDECKEL
RING	9267341	11	1	118	92 67 343	ENTLUEFTUNGSVENTIL
RINGMUTTER DIN 582 M8 C1	411200108	81	1	653	11 30 567 0	TRANSPORTSICHERUNG
RINGSCHRAUBE DIN 580 M12	402600314	34	2	640	99 10 116 14	SEILFUEHRUNG
RINGSCHRAUBE DIN 580 M16	402600514	10	6	341	99 29 803 14	VERZURRUNG BALLAST
RINGSCHRAUBE DIN 580 M8	402600114	62	1	315	11 24 409 0	VERKLEIDUNG OW EINBAU KP
RITZELSCHUTZ	10099140	16	2	382	10 51 968 2	DW OW
ROHR	10190120	10	1	356	93 36 755 01	OELMESSEINRICHTUNG
ROHR	11248260	11	1	594	11 24 825 8	SEILFUEHRUNG SCHWK NRS
ROHR	11250564	23	1	195	11 24 114 0	KUEHLER EINBAU WASSER
ROHR	11287715	24	1	195	11 24 114 0	KUEHLER EINBAU WASSER
ROHR	11290847	170	1	98	11 24 682 0	VERTEILERGETRIEBE
ROHR	11910323	100	1	529	10 09 917 3	DOPPELWIRKZYL
ROHR	11930769	50	1	8	11 92 958 8	LUFTFUEHRUNG KPL
ROHR	289057714	55	1	510	11 23 820 3	ANLENKSTUECK KPL
ROHR	289057714	11	1	558	11 94 087 6	TRANSPORTSICHERUNG
ROHR	592316414	220	1	98	11 24 682 0	VERTEILERGETRIEBE
ROHR	9080660	6	1	235	10 15 529 8	OELWANNE VORM.
ROHR	933676701	5	1	356	93 36 755 01	OELMESSEINRICHTUNG
ROHR	956064714	7	2	593	99 48 521 14	SPITZEN AL KPL
ROHR	956213814	22	1	590	99 23 398 14	ROLLENSATZ
ROHR	957336914	17	1	581	11 28 629 9	MONTAGETEILE
ROHR	979323301	30	1	356	93 36 755 01	OELMESSEINRICHTUNG

Bezeichnung	Artikel	Pos.	Menge	Blatt	Baugruppe	Bezeichnung
ROHR	999832101	25	1	356	93 36 755 01	OELMESSEINRICHTUNG
ROHRLEITUNG	10132170	3	1	270	10 14 588 5	LECKOELRUECKLAUF
ROHRLEITUNG	10132180	20	1	270	10 14 588 5	LECKOELRUECKLAUF
ROHRLEITUNG	10141986	4	1	269	10 14 333 9	KRAFTSTOFFLEITUNGEN
ROHRLEITUNG	10141988	1	1	269	10 14 333 9	KRAFTSTOFFLEITUNGEN
ROHRLEITUNG	10141989	2	1	269	10 14 333 9	KRAFTSTOFFLEITUNGEN
ROHRLEITUNG	10142006	8	1	270	10 14 588 5	LECKOELRUECKLAUF
ROHRLEITUNG	10142080	3	1	269	10 14 333 9	KRAFTSTOFFLEITUNGEN
ROHRLEITUNG	10143235	1	1	270	10 14 588 5	LECKOELRUECKLAUF
ROHRLEITUNG	10145889	13	1	270	10 14 588 5	LECKOELRUECKLAUF
ROHRLEITUNG	10145914	12	1	293	10 14 511 2	ABGASSTUTZEN ANBAU
ROHRLEITUNG	10146838	4	1	294	10 14 622 4	LADEDRUCKREGELUNG
ROHRLEITUNG	10146839	5	1	294	10 14 622 4	LADEDRUCKREGELUNG
ROHRLEITUNG	10146840	6	1	294	10 14 622 4	LADEDRUCKREGELUNG
ROHRLEITUNG	10147368	2	1	274	10 14 736 9	ANSAUGSTUTZEN ANBAU
ROHRLEITUNG	10149699	1	1	285	10 14 821 7	ROHRLEITUNG ANBAU
ROHRLEITUNG	11410004	5	1	14	11 41 475 7	ANBAUTEILE LUFTPRESSER
ROHRLEITUNG ANBAU	10139539	7	1	234	10 14 844 4	OELWANNE MIT BEFEST.
ROHRLEITUNG ANBAU	10148217	381	1	224	12 42 545 4	DIESELMOTOR
ROHRLEITUNG ANBAU	11414758	5	1	11	11 92 891 3	KOMPRESSOR NRS
ROHRSATZ	10227437	30	1	666	11 23 619 7	SELBSTVERLADESYSTEM NR
ROHRSATZ	10588224	10	1	702	10 51 728 1	VERROHRUNG HYDR
ROHRSCHELLE	10579877	7	1	702	10 51 728 1	VERROHRUNG HYDR
ROHRSCHELLE	11290856	530	1	98	11 24 682 0	VERTEILERGETRIEBE
ROHRSCHELLE	11910324	180	2	529	10 09 917 3	DOPPELWIRKZYL
ROHRSCHELLE	7382216	12	1	14	11 41 475 7	ANBAUTEILE LUFTPRESSER
ROHRSCHELLE	9077164	14	1	294	10 14 622 4	LADEDRUCKREGELUNG
ROLLE	11248261	12	1	594	11 24 825 8	SEILFUEHRUNG SCHWK NRS
ROLLE	11256217	19	2	538	11 24 444 4	A-BOCK 1 KPL
ROLLE	970961303	19	1	640	99 10 116 14	SEILFUEHRUNG
ROLLE SCHWK	971361703	19	1	361	10 51 968 6	EZW OW EINBAU KPL
ROLLENKAEFIG		16	38	352	93 88 497 01	PLANETENGETRIEBE
ROLLENSATZ	992339814	82	1	3	01 38 376 14	LR 1300 SX
ROLLENTRAEGER	919022714	25	1	640	99 10 116 14	SEILFUEHRUNG
ROLLWAGEN KPL	11928908	1	2	648	10 55 601 1	ABSTURZSICHERUNG KPL
RS ANSCHLUSSGEHAEUSE	10118357	90	1	117	10 11 835 0	ANSCHLUSSGEHAEUSE
RS ANSCHLUSSPLATTE	10141317	83	1	139	10 12 878 7	V.PUMPE
RS ANTRIEB	10153606	180	1	223	12 42 545 4	DIESELMOTOR
RS ANTRIEB	11893253	1	1	494	11 89 321 4	ANTRIEB
RS DECKEL	9275443	85	1	115	10 11 834 9	DOPPELV.PUMPE
RS DRUCKABSCHNEIDUNG	10118367	83	1	115	10 11 834 9	DOPPELV.PUMPE
RS DRUCKROHRSTUTZEN	10141140	200	1	262	10 15 315 1	DRUCKROHRSTUTZEN
RS FLANSCH	9077464	1	2	126	10 13 975 2	RS SCHWENKJOCH
RS HEBEL	10122245	7	1	146	10 13 802 5	RS TRIEBWERK
RS HOCHDRUCKPUMPE	10150743	1	1	258	10 15 085 7	HOCHDRUCKPUMPE MIT BEFE
RS HOCHDRUCKPUMPE	10150743	200	1	258	10 15 085 7	HOCHDRUCKPUMPE MIT BEFE
RS INJEKTOR	10152874	200	1	261	10 15 286 7	INJEKTOR MIT BEFEST.
RS KOLBEN MIT GLEITSCHUH	10122692	4	1	146	10 13 802 5	RS TRIEBWERK
RS KOLBEN MIT GLEITSCHUH	9889831	1	9	130	98 89 984	RS TRIEBWERK
RS KOLBEN MIT GLEITSCHUH	9889831	1	1	133	98 89 983	RS TRIEBWERK
RS KURBELWELLENDICHTUN	10121335	2	1	241	10 12 134 5	RS KURBELWELLENDICHTUN
RS KURBELWELLENDICHTUN	10121345	52	1	223	12 42 545 4	DIESELMOTOR
RS KURBELWELLENDICHTUN	10121952	1	1	241	10 12 134 5	RS KURBELWELLENDICHTUN
RS KURBELWELLENLAGERUN	10116928	50	1	240	90 76 458	KURBELWELLENLAGERSATZ
RS MAGNET	9273187	97	1	116	10 11 834 9	DOPPELV.PUMPE
RS RUECKZUGKUGEL+RUEC	9078214	3	1	146	10 13 802 5	RS TRIEBWERK
RS RUECKZUGKUGEL+RUEC	9889988	14	1	130	98 89 984	RS TRIEBWERK
RS RUECKZUGKUGEL+RUEC	9889988	14	1	133	98 89 983	RS TRIEBWERK
RS SCHWENKJOCH	10122246	8	1	146	10 13 802 5	RS TRIEBWERK
RS SCHWENKJOCH	10139752	84	1	115	10 11 834 9	DOPPELV.PUMPE

Bezeichnung	Artikel	Pos.	Menge	Blatt	Baugruppe	Bezeichnung
RS SCHWENKLAGER	10143607	6	1	146	10 13 802 5	RS TRIEBWERK
RS TRIEBWERK	10138025	81	1	139	10 12 878 7	V.PUMPE
RS TRIEBWERK	9889983	94	1	116	10 11 834 9	DOPPELV.PUMPE
RS TRIEBWERK	9889984	92	1	116	10 11 834 9	DOPPELV.PUMPE
RS VERSCHLUSSRING	10138032	84	1	139	10 12 878 7	V.PUMPE
RS VERSCHLUSSRING	10138032	6	1	158	10 13 803 3	DICHTSATZ KPL.
RS VERSCHLUSSRING	9268016	96	1	116	10 11 834 9	DOPPELV.PUMPE
RS VERSCHLUSSRING	9268016	96	1	138	92 76 408	DS DOPPELPUMPE
RS VERSTELLUNG	10122262	85	1	139	10 12 878 7	V.PUMPE
RS VORFOERDERPUMPE	10149198	220	1	258	10 15 085 7	HOCHDRUCKPUMPE MIT BEFE
RS VORFOERDERPUMPE	10149198	5	1	259	10 15 074 3	RS HOCHDRUCKPUMPE
RS WELLE	10138027	1	1	147	10 13 802 6	RS ZYL.+STEUERPL.+WELLE
RS WELLE	9884402	95	1	116	10 11 834 9	DOPPELV.PUMPE
RS WELLE	9889977	93	1	116	10 11 834 9	DOPPELV.PUMPE
RS ZUSATZTEILE	10122248	80	1	139	10 12 878 7	V.PUMPE
RS ZYL.+STEUERPL.+WELLE	10138026	2	1	146	10 13 802 5	RS TRIEBWERK
RS ZYLINDER+STEUERPLATT	9889832	2	1	133	98 89 983	RS TRIEBWERK
RS ZYLINDER+STEUERPLATT	9889833	2	1	130	98 89 984	RS TRIEBWERK
RS1 KURBELWELLENLAGERU	10140599	51	1	240	90 76 458	KURBELWELLENLAGERSATZ
RS2 KURBELWELLENLAGERU	10140603	52	1	240	90 76 458	KURBELWELLENLAGERSATZ
RUECKENTEIL	10289988	2	1	434	10 22 506 8	FAHRERSITZ
RUECKFALLSTUETZE	11292598	60	1	2	01 38 376 14	LR 1300 SX
RUECKFALLSTUETZEN EINBA	11275365	10	1	525	11 29 259 8	RUECKFALLSTUETZE
RUECKFALLSTUETZEN HYDR	10585108	2	1	525	11 29 259 8	RUECKFALLSTUETZE
RUECKLAUFFILTER	10515724	12	1	60	10 56 070 1	TANK HYDR KPL
RUECKLAUFROHR	10580170	19	1	92	11 24 048 0	ZENTRALAGGREGAT
RUECKSCHLAGVENTIL	10099055	12	2	446	11 89 300 5	VERROHRUNG HYDR
RUECKSCHLAGVENTIL	10119971	9	1	239	10 14 671 6	OELLEITUNG VORM.
RUECKSCHLAGVENTIL	10352371	170	1	685	59 21 826 14	ABSTUETZZYLINDER
RUECKSCHLAGVENTIL	11229182	4	1	34	10 35 148 6	VENTILBLOCK
RUECKSCHLAGVENTIL	11233729	3	2	87	10 22 540 8	VENTILBLOCK
RUECKSCHLAGVENTIL	11233742	9	1	87	10 22 540 8	VENTILBLOCK
RUECKSCHLAGVENTIL	11233749	10	1	87	10 22 540 8	VENTILBLOCK
RUECKSCHLAGVENTIL	11233751	11	1	87	10 22 540 8	VENTILBLOCK
RUECKSCHLAGVENTIL	11270155	3	1	530	59 20 224 14	LASTHALTEVENTIL
RUECKSCHLAGVENTIL	11835950	181	4	30	11 28 647 6	VENTILBLOCK
RUECKSCHLAGVENTIL	510411614	10	1	528	10 51 959 1	VERROHRUNG HYDR
RUECKSCHLAGVENTIL	510493714	4	1	486	11 26 260 6	WINDE 1 HYDR
RUECKSCHLAGVENTIL	510493714	4	1	501	11 26 261 1	WINDE 2 HYDR
RUECKSCHLAGVENTIL	511419314	22	1	94	11 24 773 5	AGGREGAT HYDR
RUECKSCHLAGVENTIL	511458114	16	4	446	11 89 300 5	VERROHRUNG HYDR
RUECKSCHLAGVENTIL	511458814	5	1	486	11 26 260 6	WINDE 1 HYDR
RUECKSCHLAGVENTIL	511458814	5	1	501	11 26 261 1	WINDE 2 HYDR
RUECKSCHLAGVENTIL	511607214	31	1	20	11 29 618 6	OW HYDR
RUECKSCHLAGVENTIL	511631514	41	1	20	11 29 618 6	OW HYDR
RUECKSCHLAGVENTIL	592044714	33	1	20	11 29 618 6	OW HYDR
RUECKSCHLAGVENTIL	592052914	29	1	723	51 00 959 14	BETANKUNGSPUMPE
RUECKSCHLAGVENTIL	592071014	230	1	30	11 28 647 6	VENTILBLOCK
RUECKSCHLAGVENTIL ENTS	510466114	2	1	702	10 51 728 1	VERROHRUNG HYDR
RUECKZUGKUGEL	10324872	6	1	170	10 32 489 2	TRIEBWERK
RUECKZUGKUGEL	9889929	1	1	132	98 89 988	RS RUECKZUGKUGEL+RUEC
RUECKZUGPLATTE	7023459	4	1	170	10 32 489 2	TRIEBWERK
RUECKZUGPLATTE	7023835	11	1	390	11 94 017 6	TRIEBWERK HYDRAULIKTEIL
RUECKZUGPLATTE	9889930	2	1	132	98 89 988	RS RUECKZUGKUGEL+RUEC
RUNDSCHLINGE	10222935	92	2	504	10 56 187 5	WERKZEUGAUSRUESTUNG
RUNDSCHLINGE	10280543	27	4	666	11 23 619 7	SELBSTVERLADESYSTEM NR
RUNDSCHLINGE	790269114	93	1	504	10 56 187 5	WERKZEUGAUSRUESTUNG
RUNDSCHLINGE	790365114	29	1	666	11 23 619 7	SELBSTVERLADESYSTEM NR
RUNDSTAHL	954584908	17	144	467	11 89 365 0	RAUPENTRAEGER RE KPL
RUNDSTAHL	954584908	17	144	478	11 89 365 1	RAUPENTRAEGER LI KPL

Bezeichnung	Artikel	Pos.	Menge	Blatt	Baugruppe	Bezeichnung
SAMMELSCHIENE	10529597	57	1	406	10 55 963 5	SCHALTSCHR X1
SAMMELSCHIENE	11219647	58	1	406	10 55 963 5	SCHALTSCHR X1
SAUGDROSSELVENTIL	12401396	230	1	258	10 15 085 7	HOCHDRUCKPUMPE MIT BEFE
SAUGSCHLAUCH	11236511	45	1	191	10 57 532 2	ANSAUGROHR OEL KPL
SAUGSCHLAUCH	11236513	47	1	191	10 57 532 2	ANSAUGROHR OEL KPL
SAUGSCHLAUCH	11236514	43	1	191	10 57 532 2	ANSAUGROHR OEL KPL
SAUGSCHLAUCH	11236515	41	1	191	10 57 532 2	ANSAUGROHR OEL KPL
SAUGSCHLAUCH	11236517	40	1	191	10 57 532 2	ANSAUGROHR OEL KPL
SAUGSCHLAUCH	11236518	46	1	191	10 57 532 2	ANSAUGROHR OEL KPL
SAUGSCHLAUCH	592257814	44	1	191	10 57 532 2	ANSAUGROHR OEL KPL
SCHAEKEL	11280746	16	1	637	11 27 109 7	FANGSTANGE NRS
SCHAEKEL	773930114	19	1	505	10 56 183 8	WERKZEUG
SCHAEKEL	773930114	13	1	618	10 51 743 9	SEILEINZIEHWINDE KPL NRS
SCHAEKEL	773935814	28	4	666	11 23 619 7	SELBSTVERLADESYSTEM NR
SCHAEKEL	773939214	3	1	462	11 91 872 5	KETTE KPL
SCHAEKEL	773939214	15	1	591	99 30 800 14	SPITZENENDSCHALTER EINBA
SCHAEKEL	773954514	94	2	504	10 56 187 5	WERKZEUGAUSRUESTUNG
SCHAEKEL	773954714	3	2	476	99 08 357 14	ANHAENGEKETTE
SCHALLABNAHME	981953714	992	1	4	01 38 376 14	LR 1300 SX
SCHALLGEBER	11933792	10	1	417	11 95 272 6	SCHALLGEBER EL
SCHALLGEBER EL	11952726	83	1	404	11 27 973 6	KABINE EL
SCHALTELEMENT	606655208	1	1	596	92 75 218 08	ENDSCHALTER HUB OBEN
SCHALTER	10445976	1	1	413	69 31 685 14	SICHERHEITSHEBEL KPL
SCHALTER	592291814	121	1	420	10 35 008 0	KABINE
SCHALTERGEHAEUSE	385094414	5	1	411	10 53 171 8	TASTATUR
SCHALTHUELSE	540272214	32	1	627	54 02 703 14	FLANSCH KPL
SCHALTSCHR X1	10559635	8	1	403	11 27 973 6	KABINE EL
SCHARNIER	385204714	5	2	321	10 57 883 5	TUER
SCHARNIER	385204714	5	2	323	10 57 897 6	TUER
SCHARNIER	385204714	8	2	325	10 57 940 0	TUER
SCHARNIER	385204714	8	2	326	10 56 623 7	TUER
SCHARNIER	385204714	5	2	327	10 56 580 8	TUER
SCHARNIER	954560603	15	2	521	10 58 193 7	GITTERROST KPL
SCHARNIER KPL	10554231	12	2	649	10 55 280 7	GITTERROST KPL
SCHEIBE		58	1	352	93 88 497 01	PLANETENGETRIEBE
SCHEIBE	10522188	4	1	426	59 22 871 14	FRONTSCHEIBE KPL
SCHEIBE	10687926	81	1	410	10 03 610 7	TASTATUR BEDIENPULT X11
SCHEIBE	11293195	7	1	457	10 44 510 2	SCHNELLVERSCHLUSSKUPPL
SCHEIBE	11922654	13	1	203	10 57 423 9	KUEHLER MOTOR
SCHEIBE	540271214	25	6	625	54 02 701 14	PLANETENSTUFE
SCHEIBE	540271514	29	1	625	54 02 701 14	PLANETENSTUFE
SCHEIBE	540271914	3	1	627	54 02 703 14	FLANSCH KPL
SCHEIBE	540273114	11	1	629	54 02 705 14	ANTRIEB KPL
SCHEIBE	592288214	32	1	426	59 22 871 14	FRONTSCHEIBE KPL
SCHEIBE	7023834	5	1	390	11 94 017 6	TRIEBWERK HYDRAULIKTEIL
SCHEIBE	927562301	5	1	396	90 01 376 2	DREHWERKANTRIEB
SCHEIBE 1.9X71X118 PA 6 G	11942312	24	4	535	11 27 536 5	RUECKFALLSTUETZEN EINBA
SCHEIBE 10/30X50 S355J2;EN	11249738	11	2	212	11 24 114 4	KRAFTSTOFFANLAGE
SCHEIBE 12/30X30 S355J2;EN	10519789	74	4	207	11 24 114 2	ANSAUGANLAGE LUFT
SCHEIBE 12/50X5 POLYURE.	10351046	57	1	8	11 92 958 8	LUFTFUEHRUNG KPL
SCHEIBE 129/102X2 ST 12.03	385151114	6	1	370	99 29 258 14	EZW ROLLENPAKET
SCHEIBE 165/132X1 ST 12.03	385123814	13	2	370	99 29 258 14	EZW ROLLENPAKET
SCHEIBE 165/132X2 ST 12.03	949352914	12	4	370	99 29 258 14	EZW ROLLENPAKET
SCHEIBE 200/103X1 DC01;EN	385255414	16	4	681	11 89 568 6	SELBSTVERLADESYSTEM NR
SCHEIBE 200/103X2 DC01;EN	385255314	15	4	681	11 89 568 6	SELBSTVERLADESYSTEM NR
SCHEIBE 200/103X4 S235JR;E	385255514	17	4	681	11 89 568 6	SELBSTVERLADESYSTEM NR
SCHEIBE 21/37X4 PA 6 G	948967314	3	4	585	11 28 357 6	MONTAGETEILE
SCHEIBE 225/81X26 PA 6 G	970855603	6	2	541	99 14 137 14	UMLENKROLLE KPL
SCHEIBE 25.2/32X3 POM	958471614	18	1	321	10 57 883 5	TUER
SCHEIBE 25.2/32X3 POM	958471614	18	1	323	10 57 897 6	TUER

Bezeichnung	Artikel	Pos.	Menge	Blatt	Baugruppe	Bezeichnung
SCHEIBE 25.2/32X3 POM	958471614	7	1	325	10 57 940 0	TUER
SCHEIBE 25.2/32X3 POM	958471614	7	1	326	10 56 623 7	TUER
SCHEIBE 25.2/32X3 POM	958471614	15	1	327	10 56 580 8	TUER
SCHEIBE 34X45X1	9078522	6	2	246	11 44 800 5	KIPPHEBELBOCK VORM.
SCHEIBE 46/70X2 POLYAMID	10593096	23	8	83	10 51 969 4	A-BOCK AUFRICHTZYL EINBA
SCHEIBE 52/92X1 PA 6 G	11241005	22	16	83	10 51 969 4	A-BOCK AUFRICHTZYL EINBA
SCHEIBE 52/92X3 PA 6 G	949740514	15	20	83	10 51 969 4	A-BOCK AUFRICHTZYL EINBA
SCHEIBE 53/10X5 AISI 316	10567619	13	2	195	11 24 114 0	KUEHLER EINBAU WASSER
SCHEIBE 58/90X2 GUMMI NBR	949942814	16	4	561	11 93 703 7	HALTESTANGE KPL
SCHEIBE 58/90X2 GUMMI NBR	949942814	16	4	570	11 93 702 0	HALTESTANGE KPL
SCHEIBE 58/90X2 GUMMI NBR	949942814	39	4	581	11 28 629 9	MONTAGETEILE
SCHEIBE 76/13X6 LH355-40;1	947084514	22	12	341	99 29 803 14	VERZURRUNG BALLAST
SCHEIBE 81/200X74 PA 6 G	948773814	5	16	541	99 14 137 14	UMLENKROLLE KPL
SCHEIBE 9/16X25 S355J2;EN	10553403	46	6	217	11 24 114 5	ANLAGE HARNSTOFF EINBAU
SCHEIBE AEHNL.ISO 7089 16 P	420053101	50	20	633	10 55 372 1	DACHGELAENDER NRS
SCHEIBE DIN 34816 10.5 PA 6.	485568514	9	4	374	99 29 392 14	SEITENTEIL
SCHEIBE DIN 34816 10.5 PA 6.	485568514	17	12	376	99 29 386 14	KONSOLE KPL
SCHEIBE DIN 34816 10.5 PA 6.	485568514	17	12	377	99 29 434 14	KONSOLE KPL
SCHEIBE DIN 34816 13 PA 6.6	485568614	11	8	559	11 94 087 8	MONTAGEEINHEIT
SCHEIBE DIN 440 R11 ST	420600408	13	6	79	10 56 067 3	BATTERIE EINBAU KPL
SCHEIBE DIN 6340 10.5 C35	421300214	72	4	60	10 56 070 1	TANK HYDR KPL
SCHEIBE DIN 6340 10.5 C35	421300214	71	4	189	10 51 948 1	ANSAUGROHR OEL
SCHEIBE DIN 6340 10.5 C35	421300214	74	24	196	11 24 114 0	KUEHLER EINBAU WASSER
SCHEIBE DIN 6340 10.5 C35	421300214	71	22	202	11 24 114 1	KUEHLER EINBAU LADELUFT
SCHEIBE DIN 6340 10.5 C35	421300214	72	6	207	11 24 114 2	ANSAUGANLAGE LUFT
SCHEIBE DIN 6340 10.5 C35	421300214	71	28	211	11 24 114 3	ABGASANLAGE
SCHEIBE DIN 6340 10.5 C35	421300214	94	12	218	11 24 114 5	ANLAGE HARNSTOFF EINBAU
SCHEIBE DIN 6340 10.5 C35	421300214	72	2	311	11 24 114 6	ABDECKUNG
SCHEIBE DIN 6340 13 ST	4635283	73	12	189	10 51 948 1	ANSAUGROHR OEL
SCHEIBE DIN 6340 13 ST	4635283	72	8	211	11 24 114 3	ABGASANLAGE
SCHEIBE DIN 6340 13 ST	4635283	95	2	218	11 24 114 5	ANLAGE HARNSTOFF EINBAU
SCHEIBE DIN 6340 17 C35	421300414	70	3	58	10 56 070 0	TANK HYDR EINBAU
SCHEIBE DIN 6340 17 C35	421300414	70	3	64	10 56 073 2	KRAFTSTOFFTANK EINBAU
SCHEIBE DIN 6340 21 C35	10567956	5	8	467	11 89 365 0	RAUPENTRAEGER RE KPL
SCHEIBE DIN 6340 21 C35	10567956	5	8	478	11 89 365 1	RAUPENTRAEGER LI KPL
SCHEIBE DIN 6340 25	883203014	73	2	188	11 24 113 8	MOTORLAGER KPL
SCHEIBE DIN 6340 8.4 C35	421300514	77	4	188	11 24 113 8	MOTORLAGER KPL
SCHEIBE DIN 6340 8.4 C35	421300514	72	20	196	11 24 114 0	KUEHLER EINBAU WASSER
SCHEIBE DIN 6340 8.4 C35	421300514	70	28	202	11 24 114 1	KUEHLER EINBAU LADELUFT
SCHEIBE DIN 6340 8.4 C35	421300514	70	4	205	11 28 574 7	WP
SCHEIBE DIN 6340 8.4 C35	421300514	71	4	207	11 24 114 2	ANSAUGANLAGE LUFT
SCHEIBE DIN 6916 17 C45	460024203	16	2	361	10 51 968 6	EZW OW EINBAU KPL
SCHEIBE DIN 6916 17 C45	460024203	8	8	374	99 29 392 14	SEITENTEIL
SCHEIBE DIN 6916 17 C45	460024203	15	6	376	99 29 386 14	KONSOLE KPL
SCHEIBE DIN 6916 17 C45	460024203	15	6	377	99 29 434 14	KONSOLE KPL
SCHEIBE DIN 6916 21 C45	460022203	11	48	382	10 51 968 2	DW OW
SCHEIBE DIN 6916 25 C45	460014603	74	2	188	11 24 113 8	MOTORLAGER KPL
SCHEIBE DIN 6916 25 C45	460014603	9	45	467	11 89 365 0	RAUPENTRAEGER RE KPL
SCHEIBE DIN 6916 25 C45	460014603	9	45	478	11 89 365 1	RAUPENTRAEGER LI KPL
SCHEIBE DIN 7349 17 ST	421600901	53	54	467	11 89 365 0	RAUPENTRAEGER RE KPL
SCHEIBE DIN 7349 17 ST	421600901	53	54	478	11 89 365 1	RAUPENTRAEGER LI KPL
SCHEIBE DIN 7349 6.4	4000648	70	9	195	11 24 114 0	KUEHLER EINBAU WASSER
SCHEIBE DIN 7989 11 ST	421700508	88	48	335	11 24 483 7	BEF-TEILE OW
SCHEIBE DIN 7989-B 18 ST;	421700314	36	4	94	11 24 773 5	AGGREGAT HYDR
SCHEIBE DIN EN 28738 20 ST;	421101714	5	2	585	11 28 357 6	MONTAGETEILE
SCHEIBE DIN EN 28738 20 ST;	421101714	36	2	640	99 10 116 14	SEILFUEHRUNG
SCHEIBE DIN EN 28738 20 ST;	421101714	4	1	644	99 06 789 14	GABEL
SCHEIBE DIN EN 28738 22 ST;	421101814	3	2	475	10 50 179 5	AUFSTIEG KPL
SCHEIBE DIN EN 28738 26 ST;	421102214	24	8	77	10 58 163 4	KABINENAUFHAENGUNG KPL
SCHEIBE DIN EN 28738 26 ST;	421102214	3	4	82	99 23 451 14	ANLENKBOLZEN EINBAU

Bezeichnung	Artikel	Pos.	Menge	Blatt	Baugruppe	Bezeichnung
SCHEIBE DIN EN 28738 26 ST;	421102214	36	2	581	11 28 629 9	MONTAGETEILE
SCHEIBE DIN EN 28738 30 ST;	421102414	20	10	538	11 24 444 4	A-BOCK 1 KPL
SCHEIBE DIN EN 28738 36 ST;	421102914	46	2	640	99 10 116 14	SEILFUEHRUNG
SCHEIBE DIN EN 28738 36 ST;	421102914	3	12	641	99 23 405 14	ZWISCHENABSPANNUNG NR
SCHEIBE DIN EN 28738 36 ST;	421102914	3	12	643	99 23 420 14	ZWISCHENABSPANNUNG NR
SCHEIBE DIN EN 28738 36 ST;	421102914	6	14	645	97 05 997 03	ZWISCHENABSPANNUNG NR
SCHEIBE DIN EN 28738 40 ST	421103014	14	3	77	10 58 163 4	KABINENAUFHAENGUNG KPL
SCHEIBE DIN EN 28738 40 ST	421103014	78	4	188	11 24 113 8	MOTORLAGER KPL
SCHEIBE DIN EN 28738 40 ST	421103014	18	8	343	10 51 969 7	NADELEINZIEHWINDE
SCHEIBE DIN EN 28738 40 ST	421103014	12	2	593	99 48 521 14	SPITZEN AL KPL
SCHEIBE DIN EN 28738 45 ST;	421103214	19	2	83	10 51 969 4	A-BOCK AUFRICHTZYL EINBA
SCHEIBE DIN EN 28738 45 ST;	421103214	37	4	581	11 28 629 9	MONTAGETEILE
SCHEIBE DIN EN 28738 45 ST;	421103214	13	4	593	99 48 521 14	SPITZEN AL KPL
SCHEIBE DIN EN 28738 50 ST;	421103314	28	12	593	99 48 521 14	SPITZEN AL KPL
SCHEIBE DIN EN 28738 50 ST;	421103314	13	2	594	11 24 825 8	SEILFUEHRUNG SCHWK NRS
SCHEIBE DIN EN 28738 50 ST;	421103314	20	1	666	11 23 619 7	SELBSTVERLADESYSTEM NR
SCHEIBE DIN EN 28738 55 ST;	421103414	15	2	561	11 93 703 7	HALTESTANGE KPL
SCHEIBE DIN EN 28738 55 ST;	421103414	15	2	570	11 93 702 0	HALTESTANGE KPL
SCHEIBE DIN EN 28738 55 ST;	421103414	38	16	581	11 28 629 9	MONTAGETEILE
SCHEIBE DIN EN 28738 55 ST;	421103414	14	1	593	99 48 521 14	SPITZEN AL KPL
SCHEIBE DIN EN 28738 60 ST;	421103514	42	2	640	99 10 116 14	SEILFUEHRUNG
SCHEIBE DIN EN 28738 60 ST;	421103514	24	12	660	10 51 971 3	SELBSTVERLADESYSTEM NR
SCHEIBE DIN EN 28738 65 ST;	421103614	18	6	341	99 29 803 14	VERZURRUNG BALLAST
SCHEIBE DIN EN 28738 65 ST;	421103614	13	4	522	99 30 060 14	HALTESTANGE KPL
SCHEIBE DIN EN 28738 65 ST;	421103614	13	4	560	99 24 404 14	HALTESTANGE KPL
SCHEIBE DIN EN 28738 65 ST;	421103614	13	4	569	99 24 405 14	HALTESTANGE KPL
SCHEIBE DIN EN 28738 65 ST;	421103614	13	8	576	99 24 406 14	HALTESTANGE KPL
SCHEIBE DIN EN 28738 65 ST;	421103614	13	4	588	99 24 594 14	HALTESTANGE KPL
SCHEIBE DIN EN 28738 75 ST;	421103714	14	8	542	99 26 417 14	HALTESTANGE KPL
SCHEIBE DIN EN 28738 75 ST;	421103714	16	16	588	99 24 594 14	HALTESTANGE KPL
SCHEIBE DIN EN 28738 80 ST;	421103814	12	8	510	11 23 820 3	ANLENKSTUECK KPL
SCHEIBE DIN EN 28738 80 ST;	421103814	11	2	550	11 28 726 4	BOLZEN KPL
SCHEIBE DIN EN 28738 80 ST;	421103814	20	2	660	10 51 971 3	SELBSTVERLADESYSTEM NR
SCHEIBE EN 14399-6 12 C45	460022703	37	14	94	11 24 773 5	AGGREGAT HYDR
SCHEIBE EN 14399-6 12 C45	460022703	89	34	335	11 24 483 7	BEF-TEILE OW
SCHEIBE EN 14399-6 12 C45	460022703	5	4	373	99 29 389 14	SEITENTEIL
SCHEIBE EN 14399-6 12 C45	460022703	5	4	374	99 29 392 14	SEITENTEIL
SCHEIBE EN 14399-6 12 C45	460022703	14	16	376	99 29 386 14	KONSOLE KPL
SCHEIBE EN 14399-6 12 C45	460022703	14	16	377	99 29 434 14	KONSOLE KPL
SCHEIBE EN 14399-6 12 C45	460022703	71	1	653	11 30 567 0	TRANSPORTSICHERUNG
SCHEIBE EN 14399-6 30 ST	421500614	7	30	467	11 89 365 0	RAUPENTRAEGER RE KPL
SCHEIBE EN 14399-6 30 ST	421500614	7	30	478	11 89 365 1	RAUPENTRAEGER LI KPL
SCHEIBE ISO 7089	11219067	7	2	214	10 55 091 1	KRAFTSTOFFVORFILTER AN
SCHEIBE ISO 7089 10	11932238	10	16	203	10 57 423 9	KUEHLER MOTOR
SCHEIBE ISO 7089 10 A4	420001114	73	4	8	11 92 958 8	LUFTFUEHRUNG KPL
SCHEIBE ISO 7089 10 A4	420001114	15	8	57	10 51 961 6	OELKUEHLER EINBAU
SCHEIBE ISO 7089 10 A4	420001114	70	44	60	10 56 070 1	TANK HYDR KPL
SCHEIBE ISO 7089 10 A4	420001114	70	6	65	10 56 073 3	KRAFTSTOFFTANK KPL
SCHEIBE ISO 7089 10 A4	420001114	18	4	79	10 56 067 3	BATTERIE EINBAU KPL
SCHEIBE ISO 7089 10 A4	420001114	4	8	81	10 56 069 4	MODULE EINBAU
SCHEIBE ISO 7089 10 A4	420001114	70	42	188	11 24 113 8	MOTORLAGER KPL
SCHEIBE ISO 7089 10 A4	420001114	70	4	189	10 51 948 1	ANSAUGROHR OEL
SCHEIBE ISO 7089 10 A4	420001114	70	6	191	10 57 532 2	ANSAUGROHR OEL KPL
SCHEIBE ISO 7089 10 A4	420001114	73	28	196	11 24 114 0	KUEHLER EINBAU WASSER
SCHEIBE ISO 7089 10 A4	420001114	97	4	218	11 24 114 5	ANLAGE HARNSTOFF EINBAU
SCHEIBE ISO 7089 10 A4	420001114	71	11	311	11 24 114 6	ABDECKUNG
SCHEIBE ISO 7089 10 A4	420001114	55	40	315	11 24 409 0	VERKLEIDUNG OW EINBAU KP
SCHEIBE ISO 7089 10 A4	420001114	12	36	329	10 54 591 0	MOTORABDECKUNG
SCHEIBE ISO 7089 10 A4	420001114	78	53	335	11 24 483 7	BEF-TEILE OW
SCHEIBE ISO 7089 10 A4	420001114	14	16	340	10 52 656 0	MONTAGETEILE

Bezeichnung	Artikel	Pos.	Menge	Blatt	Baugruppe	Bezeichnung
SCHEIBE ISO 7089 10 A4	420001114	27	6	402	11 27 970 6	KABINE KPL
SCHEIBE ISO 7089 10 A4	420001114	65	36	510	11 23 820 3	ANLENKSTUECK KPL
SCHEIBE ISO 7089 10 A4	420001114	13	2	545	99 29 588 14	AUFLAGE
SCHEIBE ISO 7089 10 A4	420001114	13	4	546	10 35 063 3	HALTERUNG
SCHEIBE ISO 7089 10 A4	420001114	16	4	554	11 28 397 7	AUFFANGWANNE KPL
SCHEIBE ISO 7089 10 A4	420001114	16	4	555	11 28 397 8	AUFFANGWANNE KPL
SCHEIBE ISO 7089 10 A4	420001114	16	8	556	11 28 399 5	AUFFANGWANNE KPL
SCHEIBE ISO 7089 10 A4	420001114	16	8	557	11 28 399 7	AUFFANGWANNE KPL
SCHEIBE ISO 7089 10 A4	420001114	68	8	581	11 28 629 9	MONTAGETEILE
SCHEIBE ISO 7089 10 A4	420001114	22	1	584	10 59 863 3	PENDEL KPL
SCHEIBE ISO 7089 10 A4	420001114	4	8	585	11 28 357 6	MONTAGETEILE
SCHEIBE ISO 7089 10 A4	420001114	10	2	591	99 30 800 14	SPITZENENDSCHALTER EINBA
SCHEIBE ISO 7089 10 A4	420001114	17	8	593	99 48 521 14	SPITZEN AL KPL
SCHEIBE ISO 7089 10 A4	420001114	37	32	633	10 55 372 1	DACHGELAENDER NRS
SCHEIBE ISO 7089 10 A4	420001114	16	6	640	99 10 116 14	SEILFUEHRUNG
SCHEIBE ISO 7089 10 A4	420001114	70	6	718	11 31 446 3	LADELUFTROHR KPL
SCHEIBE ISO 7089 10 ST	10554336	70	1	193	11 24 113 9	ANBAUTEILE DIESELMOTOR
SCHEIBE ISO 7089 12 A4	4901782	75	3	8	11 92 958 8	LUFTFUEHRUNG KPL
SCHEIBE ISO 7089 12 A4	4901782	10	1	47	10 53 048 9	SICHERUNGSHALTER
SCHEIBE ISO 7089 12 A4	4901782	71	12	60	10 56 070 1	TANK HYDR KPL
SCHEIBE ISO 7089 12 A4	4901782	20	2	77	10 58 163 4	KABINENAUFHAENGUNG KPL
SCHEIBE ISO 7089 12 A4	4901782	11	2	79	10 56 067 3	BATTERIE EINBAU KPL
SCHEIBE ISO 7089 12 A4	4901782	76	4	188	11 24 113 8	MOTORLAGER KPL
SCHEIBE ISO 7089 12 A4	4901782	70	20	192	10 58 017 0	RUECKLAUFROHR
SCHEIBE ISO 7089 12 A4	4901782	72	3	202	11 24 114 1	KUEHLER EINBAU LADELUFT
SCHEIBE ISO 7089 12 A4	4901782	8	2	439	10 53 756 0	LEUCHTENHALTER KPL
SCHEIBE ISO 7089 12 A4	4901782	23	15	467	11 89 365 0	RAUPENTRAEGER RE KPL
SCHEIBE ISO 7089 12 A4	4901782	23	15	478	11 89 365 1	RAUPENTRAEGER LI KPL
SCHEIBE ISO 7089 12 A4	4901782	23	24	480	11 31 390 8	MITTELTEIL KPL
SCHEIBE ISO 7089 12 A4	4901782	22	16	510	11 23 820 3	ANLENKSTUECK KPL
SCHEIBE ISO 7089 12 A4	4901782	14	4	559	11 94 087 8	MONTAGEEINHEIT
SCHEIBE ISO 7089 12 A4	4901782	18	2	593	99 48 521 14	SPITZEN AL KPL
SCHEIBE ISO 7089 12 A4	4901782	49	10	633	10 55 372 1	DACHGELAENDER NRS
SCHEIBE ISO 7089 12 A4	4901782	12	6	637	11 27 109 7	FANGSTANGE NRS
SCHEIBE ISO 7089 12 A4	4901782	25	2	699	10 58 064 7	VIDEOUEBERWACHUNGSANL
SCHEIBE ISO 7089 13	10289804	8	17	299	10 11 557 7	SCHWUNGRADGEHAEUSE AN
SCHEIBE ISO 7089 16	10544172	72	48	188	11 24 113 8	MOTORLAGER KPL
SCHEIBE ISO 7089 16	10544172	102	2	335	11 24 483 7	BEF-TEILE OW
SCHEIBE ISO 7089 16	10544172	14	4	382	10 51 968 2	DW OW
SCHEIBE ISO 7089 16	10544172	36	12	467	11 89 365 0	RAUPENTRAEGER RE KPL
SCHEIBE ISO 7089 16	10544172	36	12	478	11 89 365 1	RAUPENTRAEGER LI KPL
SCHEIBE ISO 7089 16	10544172	15	28	480	11 31 390 8	MITTELTEIL KPL
SCHEIBE ISO 7089 16	10544172	43	8	510	11 23 820 3	ANLENKSTUECK KPL
SCHEIBE ISO 7089 16	10544172	26	4	552	11 28 390 8	AL BEGEHUNG
SCHEIBE ISO 7089 16	10544172	26	4	568	11 28 583 8	AL BEGEHUNG
SCHEIBE ISO 7089 16	10544172	26	4	575	11 28 626 1	AL BEGEHUNG
SCHEIBE ISO 7089 16	10544172	40	8	681	11 89 568 6	SELBSTVERLADESYSTEM NR
SCHEIBE ISO 7089 17/30X3 A4	4901893	71	4	193	11 24 113 9	ANBAUTEILE DIESELMOTOR
SCHEIBE ISO 7089 20	10544174	75	2	207	11 24 114 2	ANSAUGANLAGE LUFT
SCHEIBE ISO 7089 20	10544174	21	2	467	11 89 365 0	RAUPENTRAEGER RE KPL
SCHEIBE ISO 7089 20	10544174	21	2	478	11 89 365 1	RAUPENTRAEGER LI KPL
SCHEIBE ISO 7089 20	10544174	19	4	480	11 31 390 8	MITTELTEIL KPL
SCHEIBE ISO 7089 20	10544174	14	4	497	11 22 050 0	WINDEN EINBAU
SCHEIBE ISO 7089 20	10544174	14	4	503	11 22 050 1	WINDEN EINBAU
SCHEIBE ISO 7089 20	10544174	15	8	538	11 24 444 4	A-BOCK 1 KPL
SCHEIBE ISO 7089 20	10544174	12	4	559	11 94 087 8	MONTAGEEINHEIT
SCHEIBE ISO 7089 20	10544174	17	8	618	10 51 743 9	SEILEINZIEHWINDE KPL NRS
SCHEIBE ISO 7089 20	10544174	4	1	642	99 10 125 14	GABEL
SCHEIBE ISO 7089 24	10544176	33	12	467	11 89 365 0	RAUPENTRAEGER RE KPL
SCHEIBE ISO 7089 24	10544176	33	12	478	11 89 365 1	RAUPENTRAEGER LI KPL

Bezeichnung	Artikel	Pos.	Menge	Blatt	Baugruppe	Bezeichnung
SCHEIBE ISO 7089 24/13X2.5 S	11233289	121	4	30	11 28 647 6	VENTILBLOCK
SCHEIBE ISO 7089 27	420002601	29	4	640	99 10 116 14	SEILFUEHRUNG
SCHEIBE ISO 7089 3 A4	485546414	6	4	440	11 30 962 5	HALTER KPL
SCHEIBE ISO 7089 30	10544177	28	64	467	11 89 365 0	RAUPENTRAEGER RE KPL
SCHEIBE ISO 7089 30	10544177	13	4	469	10 55 716 2	LEITRAD KPL
SCHEIBE ISO 7089 30	10544177	28	64	478	11 89 365 1	RAUPENTRAEGER LI KPL
SCHEIBE ISO 7089 4 A4	420000314	4	3	438	97 07 857 03	LIBELLE EINBAU
SCHEIBE ISO 7089 42	420003714	36	4	538	11 24 444 4	A-BOCK 1 KPL
SCHEIBE ISO 7089 42	420003714	17	2	559	11 94 087 8	MONTAGEEINHEIT
SCHEIBE ISO 7089 42	420003714	27	10	590	99 23 398 14	ROLLENSATZ
SCHEIBE ISO 7089 5 A4	420005214	13	2	71	11 26 557 2	MONTAGETEILE
SCHEIBE ISO 7089 5 A4	420005214	11	8	80	11 31 093 2	ENDSCHALTER EINBAU
SCHEIBE ISO 7089 5 A4	420005214	5	40	81	10 56 069 4	MODULE EINBAU
SCHEIBE ISO 7089 5 A4	420005214	90	2	218	11 24 114 5	ANLAGE HARNSTOFF EINBAU
SCHEIBE ISO 7089 5 A4	420005214	63	16	510	11 23 820 3	ANLENKSTUECK KPL
SCHEIBE ISO 7089 5 A4	420005214	33	8	581	11 28 629 9	MONTAGETEILE
SCHEIBE ISO 7089 5 A4	420005214	14	16	582	11 28 610 5	ARRETIERUNG KPL
SCHEIBE ISO 7089 5 A4	420005214	42	9	681	11 89 568 6	SELBSTVERLADESYSTEM NR
SCHEIBE ISO 7089 5 A4	420005214	17	2	720	10 52 155 4	BETANKUNGSANLAGE NRS
SCHEIBE ISO 7089 6 A4	420000414	70	4	8	11 92 958 8	LUFTFUEHRUNG KPL
SCHEIBE ISO 7089 6 A4	420000414	60	4	51	10 56 645 8	KLEMMKASTEN
SCHEIBE ISO 7089 6 A4	420000414	91	29	218	11 24 114 5	ANLAGE HARNSTOFF EINBAU
SCHEIBE ISO 7089 6 A4	420000414	44	10	315	11 24 409 0	VERKLEIDUNG OW EINBAU KP
SCHEIBE ISO 7089 6 A4	420000414	23	14	402	11 27 970 6	KABINE KPL
SCHEIBE ISO 7089 6 A4	420000414	7	8	439	10 53 756 0	LEUCHTENHALTER KPL
SCHEIBE ISO 7089 6 A4	420000414	50	6	467	11 89 365 0	RAUPENTRAEGER RE KPL
SCHEIBE ISO 7089 6 A4	420000414	50	6	478	11 89 365 1	RAUPENTRAEGER LI KPL
SCHEIBE ISO 7089 6 A4	420000414	30	24	480	11 31 390 8	MITTELTEIL KPL
SCHEIBE ISO 7089 6 A4	420000414	12	3	497	11 22 050 0	WINDEN EINBAU
SCHEIBE ISO 7089 6 A4	420000414	12	3	503	11 22 050 1	WINDEN EINBAU
SCHEIBE ISO 7089 6 A4	420000414	64	56	510	11 23 820 3	ANLENKSTUECK KPL
SCHEIBE ISO 7089 6 A4	420000414	12	36	521	10 58 193 7	GITTERROST KPL
SCHEIBE ISO 7089 6 A4	420000414	29	18	538	11 24 444 4	A-BOCK 1 KPL
SCHEIBE ISO 7089 6 A4	420000414	17	1	554	11 28 397 7	AUFFANGWANNE KPL
SCHEIBE ISO 7089 6 A4	420000414	17	1	555	11 28 397 8	AUFFANGWANNE KPL
SCHEIBE ISO 7089 6 A4	420000414	17	1	556	11 28 399 5	AUFFANGWANNE KPL
SCHEIBE ISO 7089 6 A4	420000414	17	1	557	11 28 399 7	AUFFANGWANNE KPL
SCHEIBE ISO 7089 6 A4	420000414	3	10	614	11 22 322 6	MODEM KPL NRS
SCHEIBE ISO 7089 6 A4	420000414	13	2	616	11 21 552 4	WINKELANZEIGE NRS
SCHEIBE ISO 7089 6 A4	420000414	26	2	618	10 51 743 9	SEILEINZIEHWINDE KPL NRS
SCHEIBE ISO 7089 6 A4	420000414	34	34	633	10 55 372 1	DACHGELAENDER NRS
SCHEIBE ISO 7089 6 A4	420000414	21	4	649	10 55 280 7	GITTERROST KPL
SCHEIBE ISO 7089 6 A4	420000414	19	4	657	10 55 514 8	STURZSICHERUNG NRS
SCHEIBE ISO 7089 8 A4	420001014	72	6	8	11 92 958 8	LUFTFUEHRUNG KPL
SCHEIBE ISO 7089 8 A4	420001014	14	4	71	11 26 557 2	MONTAGETEILE
SCHEIBE ISO 7089 8 A4	420001014	67	6	77	10 58 163 4	KABINENAUFHAENGUNG KPL
SCHEIBE ISO 7089 8 A4	420001014	75	16	188	11 24 113 8	MOTORLAGER KPL
SCHEIBE ISO 7089 8 A4	420001014	71	6	196	11 24 114 0	KUEHLER EINBAU WASSER
SCHEIBE ISO 7089 8 A4	420001014	70	4	207	11 24 114 2	ANSAUGANLAGE LUFT
SCHEIBE ISO 7089 8 A4	420001014	70	4	212	11 24 114 4	KRAFTSTOFFANLAGE
SCHEIBE ISO 7089 8 A4	420001014	92	30	218	11 24 114 5	ANLAGE HARNSTOFF EINBAU
SCHEIBE ISO 7089 8 A4	420001014	34	21	313	11 24 409 0	VERKLEIDUNG OW EINBAU KP
SCHEIBE ISO 7089 8 A4	420001014	16	12	329	10 54 591 0	MOTORABDECKUNG
SCHEIBE ISO 7089 8 A4	420001014	87	26	335	11 24 483 7	BEF-TEILE OW
SCHEIBE ISO 7089 8 A4	420001014	14	2	343	10 51 969 7	NADELEINZIEHWINDE
SCHEIBE ISO 7089 8 A4	420001014	17	6	382	10 51 968 2	DW OW
SCHEIBE ISO 7089 8 A4	420001014	20	18	402	11 27 970 6	KABINE KPL
SCHEIBE ISO 7089 8 A4	420001014	5	2	440	11 30 962 5	HALTER KPL
SCHEIBE ISO 7089 8 A4	420001014	12	6	480	11 31 390 8	MITTELTEIL KPL
SCHEIBE ISO 7089 8 A4	420001014	44	18	510	11 23 820 3	ANLENKSTUECK KPL

Bezeichnung	Artikel	Pos.	Menge	Blatt	Baugruppe	Bezeichnung
SCHEIBE ISO 7089 8 A4	420001014	14	8	523	99 34 198 14	SCHILD LIEBHERR
SCHEIBE ISO 7089 8 A4	420001014	22	4	535	11 27 536 5	RUECKFALLSTUETZEN EINBA
SCHEIBE ISO 7089 8 A4	420001014	13	4	591	99 30 800 14	SPITZENENDSCHALTER EINBA
SCHEIBE ISO 7089 8 A4	420001014	35	14	593	99 48 521 14	SPITZEN AL KPL
SCHEIBE ISO 7089 8 A4	420001014	48	82	633	10 55 372 1	DACHGELAENDER NRS
SCHEIBE ISO 7089 8 A4	420001014	13	12	635	11 24 147 8	UW PODEST
SCHEIBE ISO 7089 8 A4	420001014	21	2	647	10 55 601 0	STURZSICHERUNG NRS
SCHEIBE ISO 7089 8 A4	420001014	15	4	649	10 55 280 7	GITTERROST KPL
SCHEIBE ISO 7089 8 A4	420001014	70	1	653	11 30 567 0	TRANSPORTSICHERUNG
SCHEIBE ISO 7089 8 A4	420001014	41	4	681	11 89 568 6	SELBSTVERLADESYSTEM NR
SCHEIBE ISO 7089 8 A4	420001014	28	6	699	10 58 064 7	VIDEOUEBERWACHUNGSANL
SCHEIBE ISO 7089 8 A4	420001014	7	1	700	10 57 848 6	MONITOR KABINE ANBAU
SCHEIBE ISO 7089 8 A4	420001014	7	4	704	11 22 037 2	FUSSPEDAL EL EINBAU
SCHEIBE ISO 7089 8 A4	420001014	15	3	711	10 52 293 0	DW GEBER NRS
SCHEIBE ISO 7089 8 A4	420001014	14	2	720	10 52 155 4	BETANKUNGSANLAGE NRS
SCHEIBE ISO 7092 6 CU;	420250114	6	4	711	10 52 293 0	DW GEBER NRS
SCHEIBE ISO 7093-1 10	11932236	12	4	203	10 57 423 9	KUEHLER MOTOR
SCHEIBE ISO 7093-1 10 A4	10540511	74	18	8	11 92 958 8	LUFTFUEHRUNG KPL
SCHEIBE ISO 7093-1 10 A4	10540511	14	14	57	10 51 961 6	OELKUEHLER EINBAU
SCHEIBE ISO 7093-1 10 A4	10540511	7	2	68	10 55 268 1	MITNEHMER EINBAU
SCHEIBE ISO 7093-1 10 A4	10540511	55	4	77	10 58 163 4	KABINENAUFHAENGUNG KPL
SCHEIBE ISO 7093-1 10 A4	10540511	4	4	79	10 56 067 3	BATTERIE EINBAU KPL
SCHEIBE ISO 7093-1 10 A4	10540511	70	51	311	11 24 114 6	ABDECKUNG
SCHEIBE ISO 7093-1 10 A4	10540511	26	134	313	11 24 409 0	VERKLEIDUNG OW EINBAU KP
SCHEIBE ISO 7093-1 10 A4	10540511	26	89	331	11 24 922 2	ABDECKUNG UNTERSEITE
SCHEIBE ISO 7093-1 10 A4	10540511	77	125	335	11 24 483 7	BEF-TEILE OW
SCHEIBE ISO 7093-1 10 A4	10540511	40	8	402	11 27 970 6	KABINE KPL
SCHEIBE ISO 7093-1 10 A4	10540511	86	16	511	11 23 820 3	ANLENKSTUECK KPL
SCHEIBE ISO 7093-1 10 A4	10540511	16	2	545	99 29 588 14	AUFLAGE
SCHEIBE ISO 7093-1 10 A4	10540511	15	2	554	11 28 397 7	AUFFANGWANNE KPL
SCHEIBE ISO 7093-1 10 A4	10540511	15	2	555	11 28 397 8	AUFFANGWANNE KPL
SCHEIBE ISO 7093-1 10 A4	10540511	15	4	556	11 28 399 5	AUFFANGWANNE KPL
SCHEIBE ISO 7093-1 10 A4	10540511	15	4	557	11 28 399 7	AUFFANGWANNE KPL
SCHEIBE ISO 7093-1 10 A4	10540511	35	8	581	11 28 629 9	MONTAGETEILE
SCHEIBE ISO 7093-1 10 A4	10540511	46	2	593	99 48 521 14	SPITZEN AL KPL
SCHEIBE ISO 7093-1 10 A4	10540511	44	78	633	10 55 372 1	DACHGELAENDER NRS
SCHEIBE ISO 7093-1 10 A4	10540511	17	4	647	10 55 601 0	STURZSICHERUNG NRS
SCHEIBE ISO 7093-1 10 A4	10540511	12	2	664	99 35 606 14	LASCHE KPL
SCHEIBE ISO 7093-1 10 A4	10540511	7	4	666	11 23 619 7	SELBSTVERLADESYSTEM NR
SCHEIBE ISO 7093-1 12 A4	10540512	34	9	77	10 58 163 4	KABINENAUFHAENGUNG KPL
SCHEIBE ISO 7093-1 12 A4	10540512	71	11	335	11 24 483 7	BEF-TEILE OW
SCHEIBE ISO 7093-1 12 A4	10540512	14	2	442	99 18 041 14	VERZURRUNG OW
SCHEIBE ISO 7093-1 16	10544173	6	4	68	10 55 268 1	MITNEHMER EINBAU
SCHEIBE ISO 7093-1 16	10544173	74	8	511	11 23 820 3	ANLENKSTUECK KPL
SCHEIBE ISO 7093-1 16	10544173	27	4	552	11 28 390 8	AL BEGEHUNG
SCHEIBE ISO 7093-1 16	10544173	27	4	568	11 28 583 8	AL BEGEHUNG
SCHEIBE ISO 7093-1 16	10544173	27	4	575	11 28 626 1	AL BEGEHUNG
SCHEIBE ISO 7093-1 20	10544175	3	1	498	10 57 462 9	BOLZEN KPL
SCHEIBE ISO 7093-1 4 A4	10540497	44	2	725	10 52 155 9	MODUL BETANKUNGSANLAG
SCHEIBE ISO 7093-1 5 A4	485570714	23	4	79	10 56 067 3	BATTERIE EINBAU KPL
SCHEIBE ISO 7093-1 6 A4	10540500	73	6	211	11 24 114 3	ABGASANLAGE
SCHEIBE ISO 7093-1 6 A4	10540500	67	6	335	11 24 483 7	BEF-TEILE OW
SCHEIBE ISO 7093-1 6 A4	10540500	27	9	699	10 58 064 7	VIDEOUEBERWACHUNGSANL
SCHEIBE ISO 7093-1 8	11932237	11	1	203	10 57 423 9	KUEHLER MOTOR
SCHEIBE ISO 7093-1 8 A4	10540510	71	6	8	11 92 958 8	LUFTFUEHRUNG KPL
SCHEIBE ISO 7093-1 8 A4	10540510	12	2	75	92 65 477 14	FEUERLOESCHER NRS
SCHEIBE ISO 7093-1 8 A4	10540510	16	4	77	10 58 163 4	KABINENAUFHAENGUNG KPL
SCHEIBE ISO 7093-1 8 A4	10540510	43	13	315	11 24 409 0	VERKLEIDUNG OW EINBAU KP
SCHEIBE ISO 7093-1 8 A4	10540510	86	34	335	11 24 483 7	BEF-TEILE OW
SCHEIBE ISO 7093-1 8 A4	10540510	27	4	361	10 51 968 6	EZW OW EINBAU KPL

Bezeichnung	Artikel	Pos.	Menge	Blatt	Baugruppe	Bezeichnung
SCHEIBE ISO 7093-1 8 A4	10540510	12	2	376	99 29 386 14	KONSOLE KPL
SCHEIBE ISO 7093-1 8 A4	10540510	12	2	377	99 29 434 14	KONSOLE KPL
SCHEIBE ISO 7093-1 8 A4	10540510	79	49	511	11 23 820 3	ANLENKSTUECK KPL
SCHEIBE ISO 7093-1 8 A4	10540510	28	5	552	11 28 390 8	AL BEGEHUNG
SCHEIBE ISO 7093-1 8 A4	10540510	28	5	568	11 28 583 8	AL BEGEHUNG
SCHEIBE ISO 7093-1 8 A4	10540510	28	5	575	11 28 626 1	AL BEGEHUNG
SCHEIBE ISO 7093-1 8 A4	10540510	34	4	581	11 28 629 9	MONTAGETEILE
SCHEIBE ISO 7093-1 8 A4	10540510	15	4	582	11 28 610 5	ARRETIERUNG KPL
SCHEIBE ISO 7093-1 8 A4	10540510	20	2	647	10 55 601 0	STURZSICHERUNG NRS
SCHEIBE ISO 7093-1 8 A4	10540510	21	4	659	11 26 901 8	HALTER KPL
SCHEIBE ISO 7093-1 8 A4	10540510	26	8	666	11 23 619 7	SELBSTVERLADESYSTEM NR
SCHEIBE ISO 7093-1 8 A4	10540510	32	4	699	10 58 064 7	VIDEOUEBERWACHUNGSANL
SCHEIBE ISO 7093-1 8 A4	10540510	18	2	720	10 52 155 4	BETANKUNGSANLAGE NRS
SCHEIBE RD 34/20.4X5 30 CRM	422010414	38	20	94	11 24 773 5	AGGREGAT HYDR
SCHEIBENSATZ	9885924	39	1	130	98 89 984	RS TRIEBWERK
SCHEIBENSATZ	9885924	39	1	133	98 89 983	RS TRIEBWERK
SCHEIBENSATZ	9885937	29	1	147	10 13 802 6	RS ZYL.+STEUERPL.+WELLE
SCHELLE	10122693	10	1	235	10 15 529 8	OELWANNE VORM.
SCHELLE	10129179	5	1	264	10 13 508 0	DRUCKROHRSTUTZEN
SCHELLE	10336774	11	1	545	99 29 588 14	AUFLAGE
SCHELLE	10336774	11	2	546	10 35 063 3	HALTERUNG
SCHELLE	10513605	46	1	8	11 92 958 8	LUFTFUEHRUNG KPL
SCHELLE	10513605	31	5	202	11 24 114 1	KUEHLER EINBAU LADELUFT
SCHELLE	11000593	13	2	294	10 14 622 4	LADEDRUCKREGELUNG
SCHELLE	11229805	30	2	207	11 24 114 2	ANSAUGANLAGE LUFT
SCHELLE	7381292	21	1	270	10 14 588 5	LECKOELRUECKLAUF
SCHELLE	7381292	12	7	294	10 14 622 4	LADEDRUCKREGELUNG
SCHELLE	7381628	38	2	305	10 15 028 8	KABELBAUM ANBAU
SCHELLE	7381629	5	3	239	10 14 671 6	OELLEITUNG VORM.
SCHELLE	7381629	39	6	305	10 15 028 8	KABELBAUM ANBAU
SCHELLE	7381630	42	2	305	10 15 028 8	KABELBAUM ANBAU
SCHELLE	7381631	14	1	274	10 14 736 9	ANSAUGSTUTZEN ANBAU
SCHELLE	7381631	16	1	274	10 14 736 9	ANSAUGSTUTZEN ANBAU
SCHELLE	7381631	43	1	305	10 15 028 8	KABELBAUM ANBAU
SCHELLE	7381635	41	3	305	10 15 028 8	KABELBAUM ANBAU
SCHELLE	7381770	32	4	305	10 15 028 8	KABELBAUM ANBAU
SCHELLE	7381771	31	1	305	10 15 028 8	KABELBAUM ANBAU
SCHELLE	7382004	59	1	217	11 24 114 5	ANLAGE HARNSTOFF EINBAU
SCHELLE	7382088	15	1	270	10 14 588 5	LECKOELRUECKLAUF
SCHELLE	7382090	37	5	305	10 15 028 8	KABELBAUM ANBAU
SCHELLE	7382092	47	2	305	10 15 028 8	KABELBAUM ANBAU
SCHELLE	774212914	31	2	94	11 24 773 5	AGGREGAT HYDR
SCHELLE	774255714	54	4	195	11 24 114 0	KUEHLER EINBAU WASSER
SCHELLE	790562114	45	2	8	11 92 958 8	LUFTFUEHRUNG KPL
SCHERENLAGERUNG	7025009	59	1	436	10 28 999 3	SCHWINGSYSTEM
SCHIEBEFENSTER	10224413	1	1	423	10 35 007 6	SCHIEBETUER
SCHIEBEFENSTER	11250970	3	1	424	10 22 441 3	SCHIEBEFENSTER
SCHIEBESITZFUEHRUNG	10289990	70	1	434	10 22 506 8	FAHRERSITZ
SCHIEBESITZFUEHRUNG	7024987	71	1	434	10 22 506 8	FAHRERSITZ
SCHIEBETUER	10350076	3	1	419	10 35 008 0	KABINE
SCHIENE	11306945	10	1	651	11 30 694 4	SCHIENE KPL
SCHIENE KPL	10554229	11	2	649	10 55 280 7	GITTERROST KPL
SCHIENE KPL	10554368	13	2	654	11 29 474 2	LAUFSTEG ZWISCHENSTUEC
SCHIENE KPL	10554368	13	2	655	11 29 474 3	LAUFSTEG ZWISCHENSTUEC
SCHIENE KPL	10554368	14	2	655	11 29 474 3	LAUFSTEG ZWISCHENSTUEC
SCHIENE KPL	10554881	15	2	655	11 29 474 3	LAUFSTEG ZWISCHENSTUEC
SCHIENE KPL	10557413	10	2	658	10 55 722 4	STURZSICHERUNG NRS
SCHIENE KPL	10564692	10	2	657	10 55 514 8	STURZSICHERUNG NRS
SCHIENE KPL	11306944	12	2	650	11 29 473 7	LAUFSTEG ZWISCHENSTUEC
SCHILD	10099300	8	1	620	10 51 726 2	VERROHRUNG HYDR

Bezeichnung	Artikel	Pos.	Menge	Blatt	Baugruppe	Bezeichnung
SCHILD	10523125	38	2	510	11 23 820 3	ANLENKSTUECK KPL
SCHILD	10533589	12	1	381	11 22 703 7	BESEILUNG EZW HAUPT AL
SCHILD	10575705	38	1	724	10 52 155 9	MODUL BETANKUNGSANLAG
SCHILD	10584544	15	1	60	10 56 070 1	TANK HYDR KPL
SCHILD	11227046	11	1	381	11 22 703 7	BESEILUNG EZW HAUPT AL
SCHILD	11228766	19	1	649	10 55 280 7	GITTERROST KPL
SCHILD	11228766	16	1	657	10 55 514 8	STURZSICHERUNG NRS
SCHILD	11232788	22	1	705	11 93 621 2	KLIMAANLAGE NRS
SCHILD	11265425	12	2	524	11 26 694 5	SCHILDER ANORD
SCHILD	11265497	11	4	524	11 26 694 5	SCHILDER ANORD
SCHILD	11274707	17	1	217	11 24 114 5	ANLAGE HARNSTOFF EINBAU
SCHILD	11274708	18	1	217	11 24 114 5	ANLAGE HARNSTOFF EINBAU
SCHILD	606774714	27	1	516	11 90 151 1	KABELSATZ 1 ANLENKSTUECK
SCHILD	773193414	39	1	510	11 23 820 3	ANLENKSTUECK KPL
SCHILD	773193414	23	1	521	10 58 193 7	GITTERROST KPL
SCHILD	773194314	40	2	510	11 23 820 3	ANLENKSTUECK KPL
SCHILD	773195214	317	1	343	10 51 969 7	NADELEINZIEHWINDE
SCHILD	773195214	317	1	618	10 51 743 9	SEILEINZIEHWINDE KPL NRS
SCHILD	790282814	2	1	598	91 89 071 14	SPITZEN AL UMBAU
SCHILD	790422414	50	1	593	99 48 521 14	SPITZEN AL KPL
SCHILD LIEBHERR	993419814	80	2	511	11 23 820 3	ANLENKSTUECK KPL
SCHILD NOT-AUS	606718408	35	1	414	11 26 095 7	STEUERSTAND RE
SCHILD STEUERPLATTE	10549547	51	1	402	11 27 970 6	KABINE KPL
SCHILD STEUERPLATTE	10549800	52	1	402	11 27 970 6	KABINE KPL
SCHILD UNFALLVERHUETUN	11461533	42	1	45	11 24 519 0	OW EL
SCHILD UVV	773195614	460	2	343	10 51 969 7	NADELEINZIEHWINDE
SCHILD UVV	773195614	460	2	618	10 51 743 9	SEILEINZIEHWINDE KPL NRS
SCHILDER ANORD	11266901	110	1	547	11 24 570 5	ZWISCHENSTUECK MONTAGE
SCHILDER ANORD	11266901	110	1	565	11 24 571 1	ZWISCHENSTUECK MONTAGE
SCHILDER ANORD	11266901	110	1	572	11 24 571 7	ZWISCHENSTUECK MONTAGE
SCHILDER ANORD	11266945	110	1	511	11 23 820 3	ANLENKSTUECK KPL
SCHILDER ANORD	11269727	110	1	578	11 24 132 4	AL KOPF KPL
SCHILDER ANORD	11898219	52	1	2	01 38 376 14	LR 1300 SX
SCHLAUCH	10352453	17	1	207	11 24 114 2	ANSAUGANLAGE LUFT
SCHLAUCH	7362451	3	2.5	507	91 76 658 14	ABLASSSCHLAUCH KPL
SCHLAUCH	886002814	68	1	218	11 24 114 5	ANLAGE HARNSTOFF EINBAU
SCHLAUCH KPL	11222864	200	1	723	51 00 959 14	BETANKUNGSPUMPE
SCHLAUCH KPL	11267556	11	1	198	10 57 423 7	KUEHLER MOTOR
SCHLAUCH KPL	11267557	12	1	198	10 57 423 7	KUEHLER MOTOR
SCHLAUCH KPL	11267558	13	1	198	10 57 423 7	KUEHLER MOTOR
SCHLAUCH KPL	553079914	13	1	402	11 27 970 6	KABINE KPL
SCHLAUCH KPL	592007514	14	1	402	11 27 970 6	KABINE KPL
SCHLAUCH KPL	911108414	605	1	488	11 26 260 9	SCHLAUCHLISTE
SCHLAUCH KPL	911256414	596	1	56	11 26 995 4	SCHLAUCHLISTE
SCHLAUCH KPL	911292114	138	1	464	11 89 300 1	SCHLAUCHLISTE
SCHLAUCH KPL	914757914	404	1	185	11 24 113 7	SCHLAUCHLISTE
SCHLAUCH KPL	914762914	592	1	56	11 26 995 4	SCHLAUCHLISTE
SCHLAUCH KPL	914763014	655	1	364	10 55 208 5	SCHLAUCHLISTE
SCHLAUCH KPL	914792514	5022	1	56	11 26 995 4	SCHLAUCHLISTE
SCHLAUCH KPL	914794514	575	1	55	11 26 995 4	SCHLAUCHLISTE
SCHLAUCH KPL	914798914	551	1	55	11 26 995 4	SCHLAUCHLISTE
SCHLAUCH KPL	918245214	572	1	186	11 24 113 7	SCHLAUCHLISTE
SCHLAUCH KPL	918248414	280	1	663	11 22 970 9	SCHLAUCHLISTE
SCHLAUCH KPL	918269214	430	1	186	11 24 113 7	SCHLAUCHLISTE
SCHLAUCH KPL	918272514	127	1	464	11 89 300 1	SCHLAUCHLISTE
SCHLAUCH KPL	918276114	113	1	463	11 89 300 1	SCHLAUCHLISTE
SCHLAUCH KPL	918276114	117	1	463	11 89 300 1	SCHLAUCHLISTE
SCHLAUCH KPL	918285814	598	1	56	11 26 995 4	SCHLAUCHLISTE
SCHLAUCH KPL	918288114	112	1	463	11 89 300 1	SCHLAUCHLISTE
SCHLAUCH KPL	918288114	116	1	463	11 89 300 1	SCHLAUCHLISTE

Bezeichnung	Artikel	Pos.	Menge	Blatt	Baugruppe	Bezeichnung
SCHLAUCH KPL	918291914	429	1	53	11 26 995 4	SCHLAUCHLISTE
SCHLAUCH KPL	918805114	707	1	88	10 54 545 1	SCHLAUCHLISTE
SCHLAUCH KPL	918810914	595	1	56	11 26 995 4	SCHLAUCHLISTE
SCHLAUCH KPL	918819414	380	1	394	10 56 178 0	SCHLAUCHLISTE
SCHLAUCH KPL	918819614	498	1	717	11 89 549 1	SCHLAUCHLISTE
SCHLAUCH KPL	918820914	162	1	465	11 89 300 1	SCHLAUCHLISTE
SCHLAUCH KPL	918849914	827	1	622	10 52 439 2	SCHLAUCHLISTE
SCHLAUCH KPL	918870314	903	1	534	11 22 970 6	SCHLAUCHLISTE
SCHLAUCH KPL	918870914	826	1	347	99 33 241 14	SCHLAUCHLISTE
SCHLAUCH KPL	918873814	556	1	55	11 26 995 4	SCHLAUCHLISTE
SCHLAUCH KPL	918874514	432	1	186	11 24 113 7	SCHLAUCHLISTE
SCHLAUCH KPL	918882614	824	1	347	99 33 241 14	SCHLAUCHLISTE
SCHLAUCH KPL	919126414	364	1	674	99 27 747 14	SCHLAUCHLISTE
SCHLAUCH KPL	919126414	365	1	674	99 27 747 14	SCHLAUCHLISTE
SCHLAUCH KPL	919127514	708	1	88	10 54 545 1	SCHLAUCHLISTE
SCHLAUCH KPL	919140514	533	1	54	11 26 995 4	SCHLAUCHLISTE
SCHLAUCH KPL	919143414	421	1	185	11 24 113 7	SCHLAUCHLISTE
SCHLAUCH KPL	919144714	181	1	679	11 24 779 0	SCHLAUCHLISTE
SCHLAUCH KPL	919145114	805	1	726	11 28 825 7	SCHLAUCHLISTE
SCHLAUCH KPL	919146814	543	1	54	11 26 995 4	SCHLAUCHLISTE
SCHLAUCH KPL	919167714	422	1	185	11 24 113 7	SCHLAUCHLISTE
SCHLAUCH KPL	919706714	527	1	54	11 26 995 4	SCHLAUCHLISTE
SCHLAUCH KPL	919714914	581	1	55	11 26 995 4	SCHLAUCHLISTE
SCHLAUCH KPL	919735014	524	1	54	11 26 995 4	SCHLAUCHLISTE
SCHLAUCH KPL	919736714	185	1	679	11 24 779 0	SCHLAUCHLISTE
SCHLAUCH KPL	919736714	186	1	679	11 24 779 0	SCHLAUCHLISTE
SCHLAUCH KPL	919757114	635	1	502	11 26 261 2	SCHLAUCHLISTE
SCHLAUCH KPL	919778814	902	1	534	11 22 970 6	SCHLAUCHLISTE
SCHLAUCH KPL	919791614	706	1	88	10 54 545 1	SCHLAUCHLISTE
SCHLAUCH KPL	919796414	497	1	717	11 89 549 1	SCHLAUCHLISTE
SCHLAUCH KPL	928003714	163	1	465	11 89 300 1	SCHLAUCHLISTE
SCHLAUCH KPL	928009314	428	1	53	11 26 995 4	SCHLAUCHLISTE
SCHLAUCH KPL	928010214	511	1	53	11 26 995 4	SCHLAUCHLISTE
SCHLAUCH KPL	928010214	512	1	53	11 26 995 4	SCHLAUCHLISTE
SCHLAUCH KPL	928010214	513	1	53	11 26 995 4	SCHLAUCHLISTE
SCHLAUCH KPL	928010214	514	1	53	11 26 995 4	SCHLAUCHLISTE
SCHLAUCH KPL	928014714	904	1	534	11 22 970 6	SCHLAUCHLISTE
SCHLAUCH KPL	928018514	542	1	54	11 26 995 4	SCHLAUCHLISTE
SCHLAUCH KPL	928020314	546	1	54	11 26 995 4	SCHLAUCHLISTE
SCHLAUCH KPL	928029714	906	1	534	11 22 970 6	SCHLAUCHLISTE
SCHLAUCH KPL	928029714	914	1	534	11 22 970 6	SCHLAUCHLISTE
SCHLAUCH KPL	928032214	547	1	54	11 26 995 4	SCHLAUCHLISTE
SCHLAUCH KPL	928044014	390	1	394	10 56 178 0	SCHLAUCHLISTE
SCHLAUCH KPL	928110014	584	1	55	11 26 995 4	SCHLAUCHLISTE
SCHLAUCH KPL	928113314	381	1	394	10 56 178 0	SCHLAUCHLISTE
SCHLAUCH KPL	928121514	917	1	534	11 22 970 6	SCHLAUCHLISTE
SCHLAUCH KPL	928123014	580	1	55	11 26 995 4	SCHLAUCHLISTE
SCHLAUCH KPL	928130914	800	1	213	11 24 972 9	SCHLAUCHLISTE
SCHLAUCH KPL	928130914	801	1	213	11 24 972 9	SCHLAUCHLISTE
SCHLAUCH KPL	928137514	122	1	463	11 89 300 1	SCHLAUCHLISTE
SCHLAUCH KPL	928137714	702	1	88	10 54 545 1	SCHLAUCHLISTE
SCHLAUCH KPL	928152414	118	1	463	11 89 300 1	SCHLAUCHLISTE
SCHLAUCH KPL	928166714	909	1	534	11 22 970 6	SCHLAUCHLISTE
SCHLAUCH KPL	928166714	913	1	534	11 22 970 6	SCHLAUCHLISTE
SCHLAUCH KPL	928169614	151	1	464	11 89 300 1	SCHLAUCHLISTE
SCHLAUCH KPL	928169614	159	1	465	11 89 300 1	SCHLAUCHLISTE
SCHLAUCH KPL	928183014	506	1	53	11 26 995 4	SCHLAUCHLISTE
SCHLAUCH KPL	928204714	278	1	663	11 22 970 9	SCHLAUCHLISTE
SCHLAUCH KPL	928209814	102	1	463	11 89 300 1	SCHLAUCHLISTE
SCHLAUCH KPL	928209814	107	1	463	11 89 300 1	SCHLAUCHLISTE

Bezeichnung	Artikel	Pos.	Menge	Blatt	Baugruppe	Bezeichnung
SCHLAUCH KPL	928265514	111	1	463	11 89 300 1	SCHLAUCHLISTE
SCHLAUCH KPL	928265514	115	1	463	11 89 300 1	SCHLAUCHLISTE
SCHLAUCH KPL	928266514	403	1	185	11 24 113 7	SCHLAUCHLISTE
SCHLAUCH KPL	928272714	411	1	185	11 24 113 7	SCHLAUCHLISTE
SCHLAUCH KPL	928318214	802	1	520	11 23 239 9	SCHLAUCHLISTE
SCHLAUCH KPL	928318214	807	1	520	11 23 239 9	SCHLAUCHLISTE
SCHLAUCH KPL	928326514	825	1	347	99 33 241 14	SCHLAUCHLISTE
SCHLAUCH KPL	928357214	585	1	55	11 26 995 4	SCHLAUCHLISTE
SCHLAUCH KPL	928443714	522	1	53	11 26 995 4	SCHLAUCHLISTE
SCHLAUCH KPL	928445414	536	1	54	11 26 995 4	SCHLAUCHLISTE
SCHLAUCH KPL	928456714	526	1	54	11 26 995 4	SCHLAUCHLISTE
SCHLAUCH KPL	928461114	525	1	54	11 26 995 4	SCHLAUCHLISTE
SCHLAUCH KPL	928536514	606	1	488	11 26 260 9	SCHLAUCHLISTE
SCHLAUCH KPL	928538414	704	1	88	10 54 545 1	SCHLAUCHLISTE
SCHLAUCH KPL	928538414	139	1	464	11 89 300 1	SCHLAUCHLISTE
SCHLAUCH KPL	928589814	431	1	53	11 26 995 4	SCHLAUCHLISTE
SCHLAUCH KPL	928591114	703	1	88	10 54 545 1	SCHLAUCHLISTE
SCHLAUCH KPL	928611014	435	1	186	11 24 113 7	SCHLAUCHLISTE
SCHLAUCH KPL	928619114	360	1	674	99 27 747 14	SCHLAUCHLISTE
SCHLAUCH KPL	928712614	597	1	56	11 26 995 4	SCHLAUCHLISTE
SCHLAUCH KPL	928757814	200	1	9	11 92 982 1	SCHLAUCHLISTE
SCHLAUCH KPL	928763814	908	1	534	11 22 970 6	SCHLAUCHLISTE
SCHLAUCH KPL	928763814	912	1	534	11 22 970 6	SCHLAUCHLISTE
SCHLAUCH KPL	928764814	548	1	54	11 26 995 4	SCHLAUCHLISTE
SCHLAUCH KPL	928765014	508	1	53	11 26 995 4	SCHLAUCHLISTE
SCHLAUCH KPL	928815314	295	1	506	91 90 239 14	LEITUNG HYDR
SCHLAUCH KPL	928857314	407	1	185	11 24 113 7	SCHLAUCHLISTE
SCHLAUCH KPL	928861314	823	1	347	99 33 241 14	SCHLAUCHLISTE
SCHLAUCH KPL	928865914	154	1	464	11 89 300 1	SCHLAUCHLISTE
SCHLAUCH KPL	928865914	158	1	465	11 89 300 1	SCHLAUCHLISTE
SCHLAUCH KPL	928868414	418	1	185	11 24 113 7	SCHLAUCHLISTE
SCHLAUCH KPL	928872514	103	1	463	11 89 300 1	SCHLAUCHLISTE
SCHLAUCH KPL	928872814	108	1	463	11 89 300 1	SCHLAUCHLISTE
SCHLAUCH KPL	928880614	427	1	185	11 24 113 7	SCHLAUCHLISTE
SCHLAUCH KPL	928885614	559	1	55	11 26 995 4	SCHLAUCHLISTE
SCHLAUCH KPL	928950414	656	1	364	10 55 208 5	SCHLAUCHLISTE
SCHLAUCH KPL	928973314	150	1	464	11 89 300 1	SCHLAUCHLISTE
SCHLAUCH KPL	928973314	156	1	464	11 89 300 1	SCHLAUCHLISTE
SCHLAUCH KPL	929376814	705	1	88	10 54 545 1	SCHLAUCHLISTE
SCHLAUCH KPL	929399714	166	1	465	11 89 300 1	SCHLAUCHLISTE
SCHLAUCH KPL	929414814	555	1	55	11 26 995 4	SCHLAUCHLISTE
SCHLAUCH KPL	929443814	201	1	9	11 92 982 1	SCHLAUCHLISTE
SCHLAUCH KPL	929443814	828	1	622	10 52 439 2	SCHLAUCHLISTE
SCHLAUCH KPL	929467714	153	1	464	11 89 300 1	SCHLAUCHLISTE
SCHLAUCH KPL	929467714	157	1	464	11 89 300 1	SCHLAUCHLISTE
SCHLAUCH KPL	929473314	582	1	55	11 26 995 4	SCHLAUCHLISTE
SCHLAUCH KPL	929478114	420	1	185	11 24 113 7	SCHLAUCHLISTE
SCHLAUCH KPL	990038114	583	1	55	11 26 995 4	SCHLAUCHLISTE
SCHLAUCH KPL	990045814	135	1	464	11 89 300 1	SCHLAUCHLISTE
SCHLAUCH KPL	990045814	145	1	464	11 89 300 1	SCHLAUCHLISTE
SCHLAUCH KPL	990053014	408	1	185	11 24 113 7	SCHLAUCHLISTE
SCHLAUCH KPL	990055814	361	1	674	99 27 747 14	SCHLAUCHLISTE
SCHLAUCH KPL	990055914	362	1	674	99 27 747 14	SCHLAUCHLISTE
SCHLAUCH KPL	991109014	282	1	663	11 22 970 9	SCHLAUCHLISTE
SCHLAUCH KPL	991109014	283	1	663	11 22 970 9	SCHLAUCHLISTE
SCHLAUCH KPL	991139814	401	1	185	11 24 113 7	SCHLAUCHLISTE
SCHLAUCH KPL	991168714	509	1	53	11 26 995 4	SCHLAUCHLISTE
SCHLAUCH KPL	991170814	652	1	364	10 55 208 5	SCHLAUCHLISTE
SCHLAUCH KPL	991194914	628	1	186	11 24 113 7	SCHLAUCHLISTE
SCHLAUCH KPL	991195514	367	1	622	10 52 439 2	SCHLAUCHLISTE

Bezeichnung	Artikel	Pos.	Menge	Blatt	Baugruppe	Bezeichnung
SCHLAUCH KPL	991198814	810	1	520	11 23 239 9	SCHLAUCHLISTE
SCHLAUCH KPL	991198814	811	1	520	11 23 239 9	SCHLAUCHLISTE
SCHLAUCH KPL	991205314	364	1	622	10 52 439 2	SCHLAUCHLISTE
SCHLAUCH KPL	991209514	5020	1	56	11 26 995 4	SCHLAUCHLISTE
SCHLAUCH KPL	991216914	405	1	185	11 24 113 7	SCHLAUCHLISTE
SCHLAUCH KPL	991242714	915	1	534	11 22 970 6	SCHLAUCHLISTE
SCHLAUCH KPL	991253814	579	1	55	11 26 995 4	SCHLAUCHLISTE
SCHLAUCH KPL	991276414	136	1	464	11 89 300 1	SCHLAUCHLISTE
SCHLAUCH KPL	991276414	144	1	464	11 89 300 1	SCHLAUCHLISTE
SCHLAUCH KPL	991285814	918	1	534	11 22 970 6	SCHLAUCHLISTE
SCHLAUCH KPL	991312114	152	1	464	11 89 300 1	SCHLAUCHLISTE
SCHLAUCH KPL	991312114	155	1	464	11 89 300 1	SCHLAUCHLISTE
SCHLAUCH KPL	991375814	587	1	56	11 26 995 4	SCHLAUCHLISTE
SCHLAUCH KPL	991384314	388	1	394	10 56 178 0	SCHLAUCHLISTE
SCHLAUCH KPL	991390514	570	1	186	11 24 113 7	SCHLAUCHLISTE
SCHLAUCH KPL	991391814	602	1	488	11 26 260 9	SCHLAUCHLISTE
SCHLAUCH KPL	991528514	586	1	55	11 26 995 4	SCHLAUCHLISTE
SCHLAUCH KPL	991547014	419	1	185	11 24 113 7	SCHLAUCHLISTE
SCHLAUCH KPL	991563114	812	1	520	11 23 239 9	SCHLAUCHLISTE
SCHLAUCH KPL	991563114	817	1	520	11 23 239 9	SCHLAUCHLISTE
SCHLAUCH KPL	991587514	552	1	186	11 24 113 7	SCHLAUCHLISTE
SCHLAUCH KPL	991961214	137	1	464	11 89 300 1	SCHLAUCHLISTE
SCHLAUCH KPL	991964414	406	1	185	11 24 113 7	SCHLAUCHLISTE
SCHLAUCH KPL	992258514	569	1	55	11 26 995 4	SCHLAUCHLISTE
SCHLAUCH KPL	992261314	577	1	55	11 26 995 4	SCHLAUCHLISTE
SCHLAUCH KPL	992261414	520	1	53	11 26 995 4	SCHLAUCHLISTE
SCHLAUCH KPL	992273614	180	1	679	11 24 779 0	SCHLAUCHLISTE
SCHLAUCH KPL	992296514	279	1	663	11 22 970 9	SCHLAUCHLISTE
SCHLAUCH KPL	992298714	591	1	56	11 26 995 4	SCHLAUCHLISTE
SCHLAUCH KPL	992504214	813	1	520	11 23 239 9	SCHLAUCHLISTE
SCHLAUCH KPL	992511514	604	1	488	11 26 260 9	SCHLAUCHLISTE
SCHLAUCH KPL	992519014	594	1	56	11 26 995 4	SCHLAUCHLISTE
SCHLAUCH KPL	992552014	389	1	394	10 56 178 0	SCHLAUCHLISTE
SCHLAUCH KPL	992564614	131	1	464	11 89 300 1	SCHLAUCHLISTE
SCHLAUCH KPL	992564614	143	1	464	11 89 300 1	SCHLAUCHLISTE
SCHLAUCH KPL	992569114	557	1	55	11 26 995 4	SCHLAUCHLISTE
SCHLAUCH KPL	992835314	400	1	185	11 24 113 7	SCHLAUCHLISTE
SCHLAUCH KPL	992837314	367	1	674	99 27 747 14	SCHLAUCHLISTE
SCHLAUCH KPL	992857714	366	1	674	99 27 747 14	SCHLAUCHLISTE
SCHLAUCH KPL	992879314	634	1	502	11 26 261 2	SCHLAUCHLISTE
SCHLAUCH KPL	992890714	203	1	9	11 92 982 1	SCHLAUCHLISTE
SCHLAUCH KPL	992893114	803	1	520	11 23 239 9	SCHLAUCHLISTE
SCHLAUCH KPL	993204614	104	1	463	11 89 300 1	SCHLAUCHLISTE
SCHLAUCH KPL	993204614	109	1	463	11 89 300 1	SCHLAUCHLISTE
SCHLAUCH KPL	993213714	653	1	364	10 55 208 5	SCHLAUCHLISTE
SCHLAUCH KPL	993226114	800	1	520	11 23 239 9	SCHLAUCHLISTE
SCHLAUCH KPL	993226114	801	1	520	11 23 239 9	SCHLAUCHLISTE
SCHLAUCH KPL	993227714	650	1	691	10 53 635 2	SCHLAUCHLISTE
SCHLAUCH KPL	993623814	822	1	347	99 33 241 14	SCHLAUCHLISTE
SCHLAUCH KPL	993643514	409	1	185	11 24 113 7	SCHLAUCHLISTE
SCHLAUCH KPL	993657714	516	1	53	11 26 995 4	SCHLAUCHLISTE
SCHLAUCH KPL	993685614	633	1	502	11 26 261 2	SCHLAUCHLISTE
SCHLAUCH KPL	993694214	382	1	185	11 24 113 7	SCHLAUCHLISTE
SCHLAUCH KPL	993734014	535	1	54	11 26 995 4	SCHLAUCHLISTE
SCHLAUCH KPL	993751514	654	1	364	10 55 208 5	SCHLAUCHLISTE
SCHLAUCH KPL	993758914	182	1	679	11 24 779 0	SCHLAUCHLISTE
SCHLAUCH KPL	993758914	183	1	679	11 24 779 0	SCHLAUCHLISTE
SCHLAUCH KPL	993758914	188	1	679	11 24 779 0	SCHLAUCHLISTE
SCHLAUCH KPL	993758914	189	1	679	11 24 779 0	SCHLAUCHLISTE
SCHLAUCH KPL	993759614	651	1	691	10 53 635 2	SCHLAUCHLISTE

Bezeichnung	Artikel	Pos.	Menge	Blatt	Baugruppe	Bezeichnung
SCHLAUCH KPL	993774614	537	1	54	11 26 995 4	SCHLAUCHLISTE
SCHLAUCH KPL	993775014	5021	1	56	11 26 995 4	SCHLAUCHLISTE
SCHLAUCH KPL	994460114	545	1	54	11 26 995 4	SCHLAUCHLISTE
SCHLAUCH KPL	994465914	519	1	53	11 26 995 4	SCHLAUCHLISTE
SCHLAUCH KPL	994486214	900	1	534	11 22 970 6	SCHLAUCHLISTE
SCHLAUCH KPL	994486214	901	1	534	11 22 970 6	SCHLAUCHLISTE
SCHLAUCH KPL	994486214	910	1	534	11 22 970 6	SCHLAUCHLISTE
SCHLAUCH KPL	994905314	636	1	502	11 26 261 2	SCHLAUCHLISTE
SCHLAUCH KPL	995006114	578	1	55	11 26 995 4	SCHLAUCHLISTE
SCHLAUCH KPL	995027514	532	1	54	11 26 995 4	SCHLAUCHLISTE
SCHLAUCH KPL	995060114	521	1	53	11 26 995 4	SCHLAUCHLISTE
SCHLAUCH KPL	995082614	382	1	394	10 56 178 0	SCHLAUCHLISTE
SCHLAUCH KPL	995085214	133	1	464	11 89 300 1	SCHLAUCHLISTE
SCHLAUCH KPL	995085214	134	1	464	11 89 300 1	SCHLAUCHLISTE
SCHLAUCH KPL	995174014	905	1	534	11 22 970 6	SCHLAUCHLISTE
SCHLAUCH KPL	995175314	281	1	663	11 22 970 9	SCHLAUCHLISTE
SCHLAUCH KPL	995176314	538	1	54	11 26 995 4	SCHLAUCHLISTE
SCHLAUCH KPL	995180714	416	1	185	11 24 113 7	SCHLAUCHLISTE
SCHLAUCH KPL	995207914	540	1	54	11 26 995 4	SCHLAUCHLISTE
SCHLAUCH KPL	995219914	140	1	464	11 89 300 1	SCHLAUCHLISTE
SCHLAUCH KPL	995226814	184	1	679	11 24 779 0	SCHLAUCHLISTE
SCHLAUCH KPL	995226814	187	1	679	11 24 779 0	SCHLAUCHLISTE
SCHLAUCH KPL	995240114	167	1	465	11 89 300 1	SCHLAUCHLISTE
SCHLAUCH KPL	995263914	425	1	185	11 24 113 7	SCHLAUCHLISTE
SCHLAUCH KPL	995264214	566	1	55	11 26 995 4	SCHLAUCHLISTE
SCHLAUCH KPL	995285414	361	1	622	10 52 439 2	SCHLAUCHLISTE
SCHLAUCH KPL	995421014	402	1	185	11 24 113 7	SCHLAUCHLISTE
SCHLAUCH KPL	995437214	119	1	463	11 89 300 1	SCHLAUCHLISTE
SCHLAUCH KPL	995440614	576	1	55	11 26 995 4	SCHLAUCHLISTE
SCHLAUCH KPL	995512314	410	1	185	11 24 113 7	SCHLAUCHLISTE
SCHLAUCH KPL	995537614	202	1	9	11 92 982 1	SCHLAUCHLISTE
SCHLAUCH KPL	995830614	804	1	721	10 57 089 4	SCHLAUCHLISTE
SCHLAUCH KPL	995865114	907	1	534	11 22 970 6	SCHLAUCHLISTE
SCHLAUCH KPL	995865114	911	1	534	11 22 970 6	SCHLAUCHLISTE
SCHLAUCH KPL	995943114	600	1	488	11 26 260 9	SCHLAUCHLISTE
SCHLAUCH KPL	995943514	619	1	186	11 24 113 7	SCHLAUCHLISTE
SCHLAUCH KPL	995943514	619	1	488	11 26 260 9	SCHLAUCHLISTE
SCHLAUCH KPL	995943614	620	1	186	11 24 113 7	SCHLAUCHLISTE
SCHLAUCH KPL	995943614	620	1	488	11 26 260 9	SCHLAUCHLISTE
SCHLAUCH KPL	995943714	628	1	502	11 26 261 2	SCHLAUCHLISTE
SCHLAUCH KPL	995943814	629	1	186	11 24 113 7	SCHLAUCHLISTE
SCHLAUCH KPL	995943814	629	1	502	11 26 261 2	SCHLAUCHLISTE
SCHLAUCH KPL	995944014	631	1	502	11 26 261 2	SCHLAUCHLISTE
SCHLAUCH KPL	995944114	632	1	502	11 26 261 2	SCHLAUCHLISTE
SCHLAUCH KPL	995944214	384	1	394	10 56 178 0	SCHLAUCHLISTE
SCHLAUCH KPL	995944314	387	1	394	10 56 178 0	SCHLAUCHLISTE
SCHLAUCH KPL	995944414	391	1	394	10 56 178 0	SCHLAUCHLISTE
SCHLAUCH KPL	995951214	392	1	394	10 56 178 0	SCHLAUCHLISTE
SCHLAUCH KPL	995951314	650	1	364	10 55 208 5	SCHLAUCHLISTE
SCHLAUCH KPL	995951414	651	1	364	10 55 208 5	SCHLAUCHLISTE
SCHLAUCH KPL	995959114	916	1	186	11 24 113 7	SCHLAUCHLISTE
SCHLAUCH KPL	995961914	424	1	185	11 24 113 7	SCHLAUCHLISTE
SCHLAUCH KPL	995962014	426	1	53	11 26 995 4	SCHLAUCHLISTE
SCHLAUCH KPL	995972114	500	1	53	11 26 995 4	SCHLAUCHLISTE
SCHLAUCH KPL	995972214	501	1	53	11 26 995 4	SCHLAUCHLISTE
SCHLAUCH KPL	995972314	502	1	53	11 26 995 4	SCHLAUCHLISTE
SCHLAUCH KPL	995972414	503	1	53	11 26 995 4	SCHLAUCHLISTE
SCHLAUCH KPL	995972514	504	1	186	11 24 113 7	SCHLAUCHLISTE
SCHLAUCH KPL	995972614	505	1	186	11 24 113 7	SCHLAUCHLISTE
SCHLAUCH KPL	995972814	510	1	53	11 26 995 4	SCHLAUCHLISTE

Bezeichnung	Artikel	Pos.	Menge	Blatt	Baugruppe	Bezeichnung
SCHLAUCH KPL	995972914	515	1	53	11 26 995 4	SCHLAUCHLISTE
SCHLAUCH KPL	995973014	518	1	53	11 26 995 4	SCHLAUCHLISTE
SCHLAUCH KPL	995973214	523	1	54	11 26 995 4	SCHLAUCHLISTE
SCHLAUCH KPL	995973514	530	1	54	11 26 995 4	SCHLAUCHLISTE
SCHLAUCH KPL	995973614	531	1	54	11 26 995 4	SCHLAUCHLISTE
SCHLAUCH KPL	995973714	539	1	54	11 26 995 4	SCHLAUCHLISTE
SCHLAUCH KPL	995973814	517	1	53	11 26 995 4	SCHLAUCHLISTE
SCHLAUCH KPL	995974114	550	1	54	11 26 995 4	SCHLAUCHLISTE
SCHLAUCH KPL	995974214	558	1	55	11 26 995 4	SCHLAUCHLISTE
SCHLAUCH KPL	995974314	560	1	186	11 24 113 7	SCHLAUCHLISTE
SCHLAUCH KPL	995974414	561	1	55	11 26 995 4	SCHLAUCHLISTE
SCHLAUCH KPL	995974614	562	1	55	11 26 995 4	SCHLAUCHLISTE
SCHLAUCH KPL	995974714	563	1	55	11 26 995 4	SCHLAUCHLISTE
SCHLAUCH KPL	995974814	564	1	55	11 26 995 4	SCHLAUCHLISTE
SCHLAUCH KPL	995974914	565	1	55	11 26 995 4	SCHLAUCHLISTE
SCHLAUCH KPL	995976414	5023	1	56	11 26 995 4	SCHLAUCHLISTE
SCHLAUCH KPL	995976414	5024	1	56	11 26 995 4	SCHLAUCHLISTE
SCHLAUCH KPL	995976514	5025	1	56	11 26 995 4	SCHLAUCHLISTE
SCHLAUCH KPL	995976514	5026	1	56	11 26 995 4	SCHLAUCHLISTE
SCHLAUCH KPL	995991314	630	1	502	11 26 261 2	SCHLAUCHLISTE
SCHLAUCH KPL	996000214	120	1	463	11 89 300 1	SCHLAUCHLISTE
SCHLAUCH KPL	996026214	121	1	463	11 89 300 1	SCHLAUCHLISTE
SCHLAUCH KPL	996026214	129	1	464	11 89 300 1	SCHLAUCHLISTE
SCHLAUCH KPL	996026214	601	1	488	11 26 260 9	SCHLAUCHLISTE
SCHLAUCH KPL	996037814	528	1	54	11 26 995 4	SCHLAUCHLISTE
SCHLAUCH KPL	996037914	529	1	54	11 26 995 4	SCHLAUCHLISTE
SCHLAUCH KPL	996038114	377	1	394	10 56 178 0	SCHLAUCHLISTE
SCHLAUCH KPL	996038214	383	1	394	10 56 178 0	SCHLAUCHLISTE
SCHLAUCH KPL	996084314	161	1	465	11 89 300 1	SCHLAUCHLISTE
SCHLAUCH KPL	996084314	164	1	465	11 89 300 1	SCHLAUCHLISTE
SCHLAUCH KPL	996084614	100	1	463	11 89 300 1	SCHLAUCHLISTE
SCHLAUCH KPL	996084614	105	1	463	11 89 300 1	SCHLAUCHLISTE
SCHLAUCH KPL	996087014	101	1	463	11 89 300 1	SCHLAUCHLISTE
SCHLAUCH KPL	996087014	106	1	463	11 89 300 1	SCHLAUCHLISTE
SCHLAUCH KPL	996089814	124	1	463	11 89 300 1	SCHLAUCHLISTE
SCHLAUCH KPL	996204514	123	1	463	11 89 300 1	SCHLAUCHLISTE
SCHLAUCH KPL	996204614	126	1	463	11 89 300 1	SCHLAUCHLISTE
SCHLAUCH KPL	996204714	141	1	464	11 89 300 1	SCHLAUCHLISTE
SCHLAUCH KPL	996204814	160	1	465	11 89 300 1	SCHLAUCHLISTE
SCHLAUCH KPL	996204814	165	1	465	11 89 300 1	SCHLAUCHLISTE
SCHLAUCH KPL	996367614	603	1	488	11 26 260 9	SCHLAUCHLISTE
SCHLAUCH KPL	996450714	130	1	464	11 89 300 1	SCHLAUCHLISTE
SCHLAUCH KPL	996450714	142	1	464	11 89 300 1	SCHLAUCHLISTE
SCHLAUCH KPL	996459514	412	1	185	11 24 113 7	SCHLAUCHLISTE
SCHLAUCH KPL	996459714	434	1	186	11 24 113 7	SCHLAUCHLISTE
SCHLAUCH KPL	996466614	507	1	53	11 26 995 4	SCHLAUCHLISTE
SCHLAUCH KPL	996466814	534	1	54	11 26 995 4	SCHLAUCHLISTE
SCHLAUCH KPL	996467014	567	1	55	11 26 995 4	SCHLAUCHLISTE
SCHLAUCH KPL	996467114	590	1	56	11 26 995 4	SCHLAUCHLISTE
SCHLAUCH KPL	996625314	820	1	347	99 33 241 14	SCHLAUCHLISTE
SCHLAUCH KPL	996625414	821	1	347	99 33 241 14	SCHLAUCHLISTE
SCHLAUCH KPL	996735814	413	1	185	11 24 113 7	SCHLAUCHLISTE
SCHLAUCH KPL	996770614	822	1	186	11 24 113 7	SCHLAUCHLISTE
SCHLAUCH KPL	996770714	823	1	221	11 26 949 8	SCHLAUCHLISTE
SCHLAUCH KPL	996770814	824	1	221	11 26 949 8	SCHLAUCHLISTE
SCHLAUCH KPL	996771014	826	1	221	11 26 949 8	SCHLAUCHLISTE
SCHLAUCH KPL	996771114	827	1	221	11 26 949 8	SCHLAUCHLISTE
SCHLAUCH KPL	996778614	541	1	54	11 26 995 4	SCHLAUCHLISTE
SCHLAUCH KPL	996779514	391	1	185	11 24 113 7	SCHLAUCHLISTE
SCHLAUCH KPL	996779614	392	1	185	11 24 113 7	SCHLAUCHLISTE

Bezeichnung	Artikel	Pos.	Menge	Blatt	Baugruppe	Bezeichnung
SCHLAUCH KPL	996779714	803	1	213	11 24 972 9	SCHLAUCHLISTE
SCHLAUCH KPL	996848514	415	1	53	11 26 995 4	SCHLAUCHLISTE
SCHLAUCH KPL	996943814	496	1	717	11 89 549 1	SCHLAUCHLISTE
SCHLAUCH KPL	996972614	132	1	464	11 89 300 1	SCHLAUCHLISTE
SCHLAUCH KPL	996991514	110	1	463	11 89 300 1	SCHLAUCHLISTE
SCHLAUCH KPL	996991514	114	1	463	11 89 300 1	SCHLAUCHLISTE
SCHLAUCH KPL	997058014	825	1	186	11 24 113 7	SCHLAUCHLISTE
SCHLAUCHARMATUR	11953398	2	1	709	10 56 536 7	MAGNETVENTIL EINBAUSATZ
SCHLAUCHBOGEN	11946456	320	1	432	11 93 934 6	KLIMAANLAGE
SCHLAUCHBOGEN	11946458	340	1	432	11 93 934 6	KLIMAANLAGE
SCHLAUCHHALTER SCHWK H	916183314	78	1	511	11 23 820 3	ANLENKSTUECK KPL
SCHLAUCHHALTER SCHWK	949401114	16	1	333	11 24 483 7	BEF-TEILE OW
SCHLAUCHLEITUNG	10144282	66	1	218	11 24 114 5	ANLAGE HARNSTOFF EINBAU
SCHLAUCHLEITUNG	10144297	67	1	218	11 24 114 5	ANLAGE HARNSTOFF EINBAU
SCHLAUCHLEITUNG	790042214	5	1	505	10 56 183 8	WERKZEUG
SCHLAUCHLEITUNG	790042914	6	1	505	10 56 183 8	WERKZEUG
SCHLAUCHLISTE	10524392	4	1	618	10 51 743 9	SEILEINZIEHWINDE KPL NRS
SCHLAUCHLISTE	10536352	4	1	688	10 53 635 0	GLEICHLAUF HYDR NRS
SCHLAUCHLISTE	10545451	4	1	83	10 51 969 4	A-BOCK AUFRICHTZYL EINBA
SCHLAUCHLISTE	10552085	4	1	361	10 51 968 6	EZW OW EINBAU KPL
SCHLAUCHLISTE	10561780	4	1	382	10 51 968 2	DW OW
SCHLAUCHLISTE	10570894	4	1	720	10 52 155 4	BETANKUNGSANLAGE NRS
SCHLAUCHLISTE	10577909	20	1	705	11 93 621 2	KLIMAANLAGE NRS
SCHLAUCHLISTE	11229706	4	1	525	11 29 259 8	RUECKFALLSTUETZE
SCHLAUCHLISTE	11229709	4	1	660	10 51 971 3	SELBSTVERLADESYSTEM NR
SCHLAUCHLISTE	11232399	4	1	508	11 23 820 3	ANLENKSTUECK KPL
SCHLAUCHLISTE	11241137	4	1	92	11 24 048 0	ZENTRALAGGREGAT
SCHLAUCHLISTE	11247790	4	1	676	11 89 568 5	SELBSTVERLADESYSTEM NR
SCHLAUCHLISTE	11249729	4	1	212	11 24 114 4	KRAFTSTOFFANLAGE
SCHLAUCHLISTE	11262609	4	1	484	11 26 260 5	WINDE 1 KRAN
SCHLAUCHLISTE	11262612	4	1	499	11 26 261 0	WINDE 2 KRAN
SCHLAUCHLISTE	11269498	126	1	218	11 24 114 5	ANLAGE HARNSTOFF EINBAU
SCHLAUCHLISTE	11269954	4	1	18	11 24 047 9	OW KPL
SCHLAUCHLISTE	11288257	103	1	720	10 52 155 4	BETANKUNGSANLAGE NRS
SCHLAUCHLISTE	11893001	4	1	443	11 89 364 8	UW KPL
SCHLAUCHLISTE	11895491	4	1	713	11 31 446 2	ANSAUGKLAPPEN NRS
SCHLAUCHLISTE	11929821	2	1	8	11 92 958 8	LUFTFUEHRUNG KPL
SCHLAUCHLISTE	992774714	4	1	666	11 23 619 7	SELBSTVERLADESYSTEM NR
SCHLAUCHLISTE	993324114	4	1	343	10 51 969 7	NADELEINZIEHWINDE
SCHLAUCHNIPPEL	10121893	11	1	11	11 92 891 3	KOMPRESSOR NRS
SCHLAUCHNIPPEL	10121893	10	1	274	10 14 736 9	ANSAUGSTUTZEN ANBAU
SCHLAUCHNIPPEL	10140969	5	1	287	10 14 274 4	KUEHLWASSERENTLUEFTUN
SCHLAUCHNIPPEL	10142668	1	1	287	10 14 274 4	KUEHLWASSERENTLUEFTUN
SCHLAUCHNIPPEL	9140351	26	1	292	10 14 013 6	ATL-ANBAU
SCHLAUCHSATZ KPL	10527918	4	1	710	10 57 790 9	SCHLAUCHLISTE
SCHLAUCHSCHELLE	10579070	50	6	191	10 57 532 2	ANSAUGROHR OEL KPL
SCHLAUCHSCHELLE	10581765	58	1	195	11 24 114 0	KUEHLER EINBAU WASSER
SCHLAUCHSCHELLE	10581765	50	1	217	11 24 114 5	ANLAGE HARNSTOFF EINBAU
SCHLAUCHSCHELLE	11005281	10	7	294	10 14 622 4	LADEDRUCKREGELUNG
SCHLAUCHSCHELLE	11067863	54	4	217	11 24 114 5	ANLAGE HARNSTOFF EINBAU
SCHLAUCHSCHELLE	11823326	39	2	217	11 24 114 5	ANLAGE HARNSTOFF EINBAU
SCHLAUCHSCHELLE	11833907	19	1	220	10 14 653 8	ENTNAHMEMODUL
SCHLAUCHSCHELLE	4900778	91	4	196	11 24 114 0	KUEHLER EINBAU WASSER
SCHLAUCHSCHELLE	4900778	11	2	274	10 14 736 9	ANSAUGSTUTZEN ANBAU
SCHLAUCHSCHELLE	4900778	25	2	292	10 14 013 6	ATL-ANBAU
SCHLAUCHSCHELLE	4900778	2	1	507	91 76 658 14	ABLASSSCHLAUCH KPL
SCHLAUCHSCHELLE	4901138	2	1	239	10 14 671 6	OELLEITUNG VORM.
SCHLAUCHSCHELLE	4981029	8	3	239	10 14 671 6	OELLEITUNG VORM.
SCHLAUCHSCHELLE	5004927	9	1	232	10 14 201 8	KURBELGEHAEUSEENTLUEF
SCHLAUCHSCHELLE	5004929	6	2	276	10 14 967 6	VERBINDUNGSLEITUNG ANBA

Bezeichnung	Artikel	Pos.	Menge	Blatt	Baugruppe	Bezeichnung
SCHLAUCHSCHELLE	5700024	8	5	232	10 14 201 8	KURBELGEHAEUSEENTLUEF
SCHLAUCHSCHELLE	774204914	55	6	195	11 24 114 0	KUEHLER EINBAU WASSER
SCHLAUCHSCHELLE	774204914	15	1	212	11 24 114 4	KRAFTSTOFFANLAGE
SCHLAUCHSCHELLE	774204914	51	14	217	11 24 114 5	ANLAGE HARNSTOFF EINBAU
SCHLAUCHSCHELLE	774206408	52	4	195	11 24 114 0	KUEHLER EINBAU WASSER
SCHLAUCHSCHELLE	774209908	31	2	207	11 24 114 2	ANSAUGANLAGE LUFT
SCHLAUCHSCHELLE	774214308	8	1	702	10 51 728 1	VERROHRUNG HYDR
SCHLAUCHSCHELLE	774217108	34	1	207	11 24 114 2	ANSAUGANLAGE LUFT
SCHLAUCHSCHELLE	774218808	53	9	195	11 24 114 0	KUEHLER EINBAU WASSER
SCHLAUCHSCHELLE	774241914	32	1	207	11 24 114 2	ANSAUGANLAGE LUFT
SCHLAUCHSCHELLE	774247214	33	2	207	11 24 114 2	ANSAUGANLAGE LUFT
SCHLAUCHSCHELLE	774256114	52	2	191	10 57 532 2	ANSAUGROHR OEL KPL
SCHLAUCHSCHELLE	790208814	51	6	191	10 57 532 2	ANSAUGROHR OEL KPL
SCHLAUCHSCHELLE	790244814	12	2	11	11 92 891 3	KOMPRESSOR NRS
SCHLAUCHSCHELLE	790244814	53	1	217	11 24 114 5	ANLAGE HARNSTOFF EINBAU
SCHLAUCHSTUTZEN	511713914	40	1	195	11 24 114 0	KUEHLER EINBAU WASSER
SCHLAUCHSTUTZEN	511713914	36	3	217	11 24 114 5	ANLAGE HARNSTOFF EINBAU
SCHLIESSBOLZEN	592333714	6	1	426	59 22 871 14	FRONTSCHEIBE KPL
SCHLIESSBOLZEN	7615720	2	1	421	10 22 645 4	TUERE ZUBEHOEHR
SCHLIESSKEIL	10447258	47	1	423	10 35 007 6	SCHIEBETUER
SCHLITZBAND	11234375	57	2	333	11 24 483 7	BEF-TEILE OW
SCHLITZBAND	11244040	52	2	333	11 24 483 7	BEF-TEILE OW
SCHLITZBAND	11247029	28	1	333	11 24 483 7	BEF-TEILE OW
SCHLITZBAND	11247792	31	9	333	11 24 483 7	BEF-TEILE OW
SCHLITZBAND	11247799	32	2	333	11 24 483 7	BEF-TEILE OW
SCHLITZBANDSTAHL	11234799	15	2	188	11 24 113 8	MOTORLAGER KPL
SCHLUESSEL	10663954	50	2	414	11 26 095 7	STEUERSTAND RE
SCHLUESSEL	981809914	999	1	4	01 38 376 14	LR 1300 SX
SCHLUESSELANHAENGER	10595399	72	1	46	11 24 519 0	OW EL
SCHLUESSELRING RD 25	704214114	20	2	319	11 24 409 1	VERKLEIDUNG
SCHLUESSELSCHALTER	10539250	71	1	46	11 24 519 0	OW EL
SCHMIERNIPPEL	11312502	4	1	602	10 50 435 2	SEILROLLE
SCHMIEROELFILTER ANBAU	10142942	150	1	223	12 42 545 4	DIESELMOTOR
SCHMIEROELLEITUNG	10140137	7	1	292	10 14 013 6	ATL-ANBAU
SCHMIEROELPUMPE	10133945	140	1	223	12 42 545 4	DIESELMOTOR
SCHMIEROELPUMPE	10138565	1	1	254	10 13 394 5	SCHMIEROELPUMPE
SCHMIEROELPUMPE	592178914	580	1	98	11 24 682 0	VERTEILERGETRIEBE
SCHNELLVERSCHLUSSKUPPL	10445101	8	1	446	11 89 300 5	VERROHRUNG HYDR
SCHNELLVERSCHLUSSKUPPL	10445102	7	1	446	11 89 300 5	VERROHRUNG HYDR
SCHNELLVERSCHLUSSKUPPL	10445105	19	1	20	11 29 618 6	OW HYDR
SCHNELLVERSCHLUSSKUPPL	10551548	9	2	446	11 89 300 5	VERROHRUNG HYDR
SCHNELLVERSCHLUSSKUPPL	10551576	2	1	513	10 51 826 1	ANLENKSTUECK HYDR
SCHNELLVERSCHRAUBUNG	510571914	15	1	20	11 29 618 6	OW HYDR
SCHNELLVERSCHRAUBUNG	510571914	9	1	528	10 51 959 1	VERROHRUNG HYDR
SCHNELLVERSCHRAUBUNG	510572214	14	2	20	11 29 618 6	OW HYDR
SCHNELLVERSCHRAUBUNG	510572214	8	1	528	10 51 959 1	VERROHRUNG HYDR
SCHNELLVERSCHRAUBUNG	511511214	18	1	20	11 29 618 6	OW HYDR
SCHNELLVERSCHRAUBUNG	511511314	17	1	20	11 29 618 6	OW HYDR
SCHNELLVERSCHRAUBUNG	511704214	8	1	20	11 29 618 6	OW HYDR
SCHNELLVERSCHRAUBUNG	511704314	2	1	506	91 90 239 14	LEITUNG HYDR
SCHNELLVERSCHRAUBUNG	511708414	16	1	20	11 29 618 6	OW HYDR
SCHONHAMMER 60G	885045214	18	1	505	10 56 183 8	WERKZEUG
SCHOTTBLECH	10558762	34	1	467	11 89 365 0	RAUPENTRAEGER RE KPL
SCHOTTBLECH	10558762	34	1	478	11 89 365 1	RAUPENTRAEGER LI KPL
SCHOTTBLECH	11235482	35	2	480	11 31 390 8	MITTELTEIL KPL
SCHOTTPLATTE	10020512	9	1	317	11 24 409 1	VERKLEIDUNG
SCHOTTPLATTE	10445043	47	1	510	11 23 820 3	ANLENKSTUECK KPL
SCHRAUBE	592287514	15	1	426	59 22 871 14	FRONTSCHEIBE KPL
SCHRAUBE DIN 7500C M2.5X5.	7024631	4	2	40	51 16 576 14	TEMPERATURREGLER
SCHRAUBE DIN 931 M8X50 8.8	11236106	19	12	601	79 04 112 14	UNTERFLASCHE

Bezeichnung	Artikel	Pos.	Menge	Blatt	Baugruppe	Bezeichnung
SCHRAUBE DIN 931 M8X50 8.8	11236106	19	12	608	79 05 205 14	UNTERFLASCHE
SCHRAUBE M12X30	11249772	10	3	449	10 55 097 0	DREHDURCHFUEHRUNG HYD
SCHRAUBE M30X1.5X150	10590183	12	4	469	10 55 716 2	LEITRAD KPL
SCHRAUBE UN 1206 M10X30	10502692	5	1	47	10 53 048 9	SICHERUNGSHALTER
SCHRAUBENSICHERUNG	10547904	10	1	365	10 55 156 3	WINDE
SCHRAUBENSICHERUNG	811202114	104	1	117	10 11 835 0	ANSCHLUSSGEHAEUSE
SCHRAUBENSICHERUNG	811202114	104	1	126	10 13 975 2	RS SCHWENKJOCH
SCHRAUBENSICHERUNG	811202114	105	1	235	10 15 529 8	OELWANNE VORM.
SCHRAUBENSICHERUNG	811202114	105	1	280	10 14 286 0	KLIMAKOMPRESSOR ANBAU
SCHRAUBENSICHERUNG	8655016	105	1	119	10 11 835 7	RS ANSCHLUSSGEHAEUSE
SCHRAUBENSICHERUNG	8655016	105	1	120	92 74 731	DS ANSCHLUSSGEHAEUSE
SCHRAUBENSICHERUNG	8655016	105	1	153	10 14 131 6	ANSCHLUSSPLATTE VORM.
SCHRAUBENSICHERUNG	8655016	105	1	257	10 14 294 2	SCHMIEROELFILTER ANBAU
SCHRAUBENSICHERUNG	8655016	109	1	296	10 12 037 2	STARTER ANBAU
SCHRAUBENSICHERUNG	8700012	106	1	134	98 89 832	RS ZYLINDER+STEUERPLATT
SCHRAUBKAPPE	779009008	8	1	264	10 13 508 0	DRUCKROHRSTUTZEN
SCHRAUBKARABINER	10473040	22	1	591	99 30 800 14	SPITZENENDSCHALTER EINBA
SCHRIFTZUG	10351188	8	2	2	01 38 376 14	LR 1300 SX
SCHRUMPFSCHLAUCH	603018114	18	0.2	584	10 59 863 3	PENDEL KPL
SCHUTZBLECH	10580585	12	1	57	10 51 961 6	OELKUEHLER EINBAU
SCHUTZGITTER	10566030	4	1	43	10 22 592 5	KUEHLER MOTOR
SCHUTZGITTER	11267554	9	1	198	10 57 423 7	KUEHLER MOTOR
SCHUTZGITTER	11932244	3	1	203	10 57 423 9	KUEHLER MOTOR
SCHUTZKAPPE	10542325	96	1	404	11 27 973 6	KABINE EL
SCHUTZKAPPE	10801869	16	1	155	10 12 323 6	DRUCKEINSPEISEVENTIL
SCHUTZKAPPE	11266978	14	80	441	10 51 969 6	VERBINDUNG OW UW
SCHUTZKAPPE	7013456	3	1	236	50 04 624	OELABLASSSCHRAUBE
SCHUTZKAPPE	789000701	34	1	349	96 96 248 01	WINDE
SCHUTZRING	10120443	3	1	241	10 12 134 5	RS KURBELWELLENDICHTUN
SCHUTZWALZE	939662601	26	1	510	11 23 820 3	ANLENKSTUECK KPL
SCHUTZWALZE	969641401	40	1	357	96 96 543 01	WINDENRAHMEN
SCHWENKTRAVERSE	11274675	2	1	604	11 27 463 8	AUFHAENGUNG
SCHWENKTRAVERSE	11274831	2	1	610	11 27 480 1	AUFHAENGUNG
SCHWERSPANNSTIFT	616155514	11	1	519	61 61 541 14	KABELTROMMEL
SCHWINGSYSTEM	10289993	50	1	434	10 22 506 8	FAHRERSITZ
SCHWUNGRAD ANBAU	10118929	530	1	225	12 42 545 4	DIESELMOTOR
SCHWUNGRAD VORM.	10118928	1	1	303	10 11 892 9	SCHWUNGRAD ANBAU
SCHWUNGRADGEHAEUSE AN	10115577	520	1	224	12 42 545 4	DIESELMOTOR
SCHWUNGRADGEHAEUSE VO	10115576	1	1	299	10 11 557 7	SCHWUNGRADGEHAEUSE AN
SCR KPL.	11403711	3	1	308	11 90 032 5	ABGASANLAGE
SECHSKANTMUTTER 8	10411095	5	2	297	11 38 664 5	STARTER
SECHSKANTMUTTER AEHNL.I	7381182	11	1	293	10 14 511 2	ABGASSTUTZEN ANBAU
SECHSKANTMUTTER DIN 934	10584965	11	4	601	79 04 112 14	UNTERFLASCHE
SECHSKANTMUTTER DIN 934	10584965	11	8	608	79 05 205 14	UNTERFLASCHE
SECHSKANTMUTTER DIN 985	411901114	8	1	47	10 53 048 9	SICHERUNGSHALTER
SECHSKANTMUTTER DIN 985	411901114	80	4	189	10 51 948 1	ANSAUGROHR OEL
SECHSKANTMUTTER DIN 985	10544155	36	8	510	11 23 820 3	ANLENKSTUECK KPL
SECHSKANTMUTTER DIN 985	10544155	29	4	552	11 28 390 8	AL BEGEHUNG
SECHSKANTMUTTER DIN 985	10544155	29	4	568	11 28 583 8	AL BEGEHUNG
SECHSKANTMUTTER DIN 985	10544155	29	4	575	11 28 626 1	AL BEGEHUNG
SECHSKANTMUTTER DIN 985	10544157	18	4	618	10 51 743 9	SEILEINZIEHWINDE KPL NRS
SECHSKANTMUTTER DIN 985	10544159	30	8	660	10 51 971 3	SELBSTVERLADESYSTEM NR
SECHSKANTMUTTER DIN 985	11236108	20	12	601	79 04 112 14	UNTERFLASCHE
SECHSKANTMUTTER DIN 985	11236108	20	12	608	79 05 205 14	UNTERFLASCHE
SECHSKANTMUTTER DIN EN 1	11314341	12	3	543	11 23 749 8	AUFLAGE KPL
SECHSKANTMUTTER DIN EN 1	11314341	13	3	562	11 23 290 7	AUFLAGE KPL
SECHSKANTMUTTER DIN EN 1	11314341	17	6	563	11 23 292 2	AUFLAGE KPL
SECHSKANTMUTTER DIN EN 1	11314341	15	4	597	11 25 204 2	AUFLAGE KPL
SECHSKANTMUTTER EN 1661	4980805	15	1	256	10 13 382 3	ABSAUGPUMPE VORM.
SECHSKANTMUTTER EN 1661	4980805	4	3	275	10 14 736 4	LUFTANSAUGUNG ANBAU

Bezeichnung	Artikel	Pos.	Menge	Blatt	Baugruppe	Bezeichnung
SECHSKANTMUTTER EN 1661	4980805	7	1	295	10 14 584 5	GENERATOR VORM.
SECHSKANTMUTTER EN 1661	4980805	3	3	296	10 12 037 2	STARTER ANBAU
SECHSKANTMUTTER EN 1661	10424333	14	3	235	10 15 529 8	OELWANNE VORM.
SECHSKANTMUTTER EN 1661	10424333	11	2	276	10 14 967 6	VERBINDUNGSLEITUNG ANBA
SECHSKANTMUTTER EN 1661	485569314	14	16	483	99 26 718 14	PODEST
SECHSKANTMUTTER EN 1661	485569314	14	16	636	11 24 575 5	PODEST
SECHSKANTMUTTER ISO 105	10540494	82	11	8	11 92 958 8	LUFTFUEHRUNG KPL
SECHSKANTMUTTER ISO 105	10540494	20	2	57	10 51 961 6	OELKUEHLER EINBAU
SECHSKANTMUTTER ISO 105	10540494	80	4	60	10 56 070 1	TANK HYDR KPL
SECHSKANTMUTTER ISO 105	10540494	5	1	68	10 55 268 1	MITNEHMER EINBAU
SECHSKANTMUTTER ISO 105	10540494	15	4	79	10 56 067 3	BATTERIE EINBAU KPL
SECHSKANTMUTTER ISO 105	10540494	82	18	196	11 24 114 0	KUEHLER EINBAU WASSER
SECHSKANTMUTTER ISO 105	10540494	81	10	202	11 24 114 1	KUEHLER EINBAU LADELUFT
SECHSKANTMUTTER ISO 105	10540494	80	2	211	11 24 114 3	ABGASANLAGE
SECHSKANTMUTTER ISO 105	10540494	106	2	218	11 24 114 5	ANLAGE HARNSTOFF EINBAU
SECHSKANTMUTTER ISO 105	10540494	83	6	311	11 24 114 6	ABDECKUNG
SECHSKANTMUTTER ISO 105	10540494	30	54	313	11 24 409 0	VERKLEIDUNG OW EINBAU KP
SECHSKANTMUTTER ISO 105	10540494	8	4	329	10 54 591 0	MOTORABDECKUNG
SECHSKANTMUTTER ISO 105	10540494	28	12	331	11 24 922 2	ABDECKUNG UNTERSEITE
SECHSKANTMUTTER ISO 105	10540494	76	83	335	11 24 483 7	BEF-TEILE OW
SECHSKANTMUTTER ISO 105	10540494	53	22	510	11 23 820 3	ANLENKSTUECK KPL
SECHSKANTMUTTER ISO 105	10540494	15	2	545	99 29 588 14	AUFLAGE
SECHSKANTMUTTER ISO 105	10540494	15	2	546	10 35 063 3	HALTERUNG
SECHSKANTMUTTER ISO 105	10540494	18	2	554	11 28 397 7	AUFFANGWANNE KPL
SECHSKANTMUTTER ISO 105	10540494	18	2	555	11 28 397 8	AUFFANGWANNE KPL
SECHSKANTMUTTER ISO 105	10540494	18	4	556	11 28 399 5	AUFFANGWANNE KPL
SECHSKANTMUTTER ISO 105	10540494	18	4	557	11 28 399 7	AUFFANGWANNE KPL
SECHSKANTMUTTER ISO 105	10540494	67	8	581	11 28 629 9	MONTAGETEILE
SECHSKANTMUTTER ISO 105	10540494	21	1	584	10 59 863 3	PENDEL KPL
SECHSKANTMUTTER ISO 105	10540494	11	4	585	11 28 357 6	MONTAGETEILE
SECHSKANTMUTTER ISO 105	10540494	12	1	591	99 30 800 14	SPITZENENDSCHALTER EINBA
SECHSKANTMUTTER ISO 105	10540494	47	1	593	99 48 521 14	SPITZEN AL KPL
SECHSKANTMUTTER ISO 105	10540494	39	54	633	10 55 372 1	DACHGELAENDER NRS
SECHSKANTMUTTER ISO 105	10540494	16	2	647	10 55 601 0	STURZSICHERUNG NRS
SECHSKANTMUTTER ISO 105	10540494	16	3	651	11 30 694 4	SCHIENE KPL
SECHSKANTMUTTER ISO 105	10540494	12	18	657	10 55 514 8	STURZSICHERUNG NRS
SECHSKANTMUTTER ISO 105	10540494	14	1	664	99 35 606 14	LASCHE KPL
SECHSKANTMUTTER ISO 105	10540494	9	2	666	11 23 619 7	SELBSTVERLADESYSTEM NR
SECHSKANTMUTTER ISO 105	10540495	36	4	77	10 58 163 4	KABINENAUFHAENGUNG KPL
SECHSKANTMUTTER ISO 105	10540495	20	2	79	10 56 067 3	BATTERIE EINBAU KPL
SECHSKANTMUTTER ISO 105	10540495	81	6	189	10 51 948 1	ANSAUGROHR OEL
SECHSKANTMUTTER ISO 105	10540495	82	4	211	11 24 114 3	ABGASANLAGE
SECHSKANTMUTTER ISO 105	10540495	105	1	218	11 24 114 5	ANLAGE HARNSTOFF EINBAU
SECHSKANTMUTTER ISO 105	10540495	70	8	335	11 24 483 7	BEF-TEILE OW
SECHSKANTMUTTER ISO 105	10540495	23	2	361	10 51 968 6	EZW OW EINBAU KPL
SECHSKANTMUTTER ISO 105	10540495	19	152	467	11 89 365 0	RAUPENTRAEGER RE KPL
SECHSKANTMUTTER ISO 105	10540495	19	152	478	11 89 365 1	RAUPENTRAEGER LI KPL
SECHSKANTMUTTER ISO 105	10540495	24	2	510	11 23 820 3	ANLENKSTUECK KPL
SECHSKANTMUTTER ISO 105	10540495	13	4	559	11 94 087 8	MONTAGEEINHEIT
SECHSKANTMUTTER ISO 105	10540495	56	10	633	10 55 372 1	DACHGELAENDER NRS
SECHSKANTMUTTER ISO 105	10540495	14	2	637	11 27 109 7	FANGSTANGE NRS
SECHSKANTMUTTER ISO 105	10540495	26	2	699	10 58 064 7	VIDEOUEBERWACHUNGSANL
SECHSKANTMUTTER ISO 1051	10540484	15	2	71	11 26 557 2	MONTAGETEILE
SECHSKANTMUTTER ISO 1051	10540484	21	2	79	10 56 067 3	BATTERIE EINBAU KPL
SECHSKANTMUTTER ISO 1051	10540484	12	4	80	11 31 093 2	ENDSCHALTER EINBAU
SECHSKANTMUTTER ISO 1051	10540484	47	4	402	11 27 970 6	KABINE KPL
SECHSKANTMUTTER ISO 1051	10540484	67	8	510	11 23 820 3	ANLENKSTUECK KPL
SECHSKANTMUTTER ISO 1051	10540484	43	4	581	11 28 629 9	MONTAGETEILE
SECHSKANTMUTTER ISO 1051	10540484	19	8	582	11 28 610 5	ARRETIERUNG KPL
SECHSKANTMUTTER ISO 1051	10540484	20	2	720	10 52 155 4	BETANKUNGSANLAGE NRS

Bezeichnung	Artikel	Pos.	Menge	Blatt	Baugruppe	Bezeichnung
SECHSKANTMUTTER ISO 1051	10540492	80	2	8	11 92 958 8	LUFTFUEHRUNG KPL
SECHSKANTMUTTER ISO 1051	10540492	80	9	196	11 24 114 0	KUEHLER EINBAU WASSER
SECHSKANTMUTTER ISO 1051	10540492	84	3	211	11 24 114 3	ABGASANLAGE
SECHSKANTMUTTER ISO 1051	10540492	101	10	218	11 24 114 5	ANLAGE HARNSTOFF EINBAU
SECHSKANTMUTTER ISO 1051	10540492	46	10	315	11 24 409 0	VERKLEIDUNG OW EINBAU KP
SECHSKANTMUTTER ISO 1051	10540492	84	3	335	11 24 483 7	BEF-TEILE OW
SECHSKANTMUTTER ISO 1051	10540492	39	6	467	11 89 365 0	RAUPENTRAEGER RE KPL
SECHSKANTMUTTER ISO 1051	10540492	39	6	478	11 89 365 1	RAUPENTRAEGER LI KPL
SECHSKANTMUTTER ISO 1051	10540492	83	32	511	11 23 820 3	ANLENKSTUECK KPL
SECHSKANTMUTTER ISO 1051	10540492	14	18	521	10 58 193 7	GITTERROST KPL
SECHSKANTMUTTER ISO 1051	10540492	31	8	538	11 24 444 4	A-BOCK 1 KPL
SECHSKANTMUTTER ISO 1051	10540492	19	1	554	11 28 397 7	AUFFANGWANNE KPL
SECHSKANTMUTTER ISO 1051	10540492	19	1	555	11 28 397 8	AUFFANGWANNE KPL
SECHSKANTMUTTER ISO 1051	10540492	19	1	556	11 28 399 5	AUFFANGWANNE KPL
SECHSKANTMUTTER ISO 1051	10540492	19	1	557	11 28 399 7	AUFFANGWANNE KPL
SECHSKANTMUTTER ISO 1051	10540492	14	2	616	11 21 552 4	WINKELANZEIGE NRS
SECHSKANTMUTTER ISO 1051	10540492	35	24	633	10 55 372 1	DACHGELAENDER NRS
SECHSKANTMUTTER ISO 1051	10540492	23	2	649	10 55 280 7	GITTERROST KPL
SECHSKANTMUTTER ISO 1051	10540492	21	2	657	10 55 514 8	STURZSICHERUNG NRS
SECHSKANTMUTTER ISO 1051	10540492	23	6	699	10 58 064 7	VIDEOUEBERWACHUNGSANL
SECHSKANTMUTTER ISO 1051	10540493	81	6	8	11 92 958 8	LUFTFUEHRUNG KPL
SECHSKANTMUTTER ISO 1051	10540493	16	2	71	11 26 557 2	MONTAGETEILE
SECHSKANTMUTTER ISO 1051	10540493	17	2	77	10 58 163 4	KABINENAUFHAENGUNG KPL
SECHSKANTMUTTER ISO 1051	10540493	84	8	188	11 24 113 8	MOTORLAGER KPL
SECHSKANTMUTTER ISO 1051	10540493	81	12	196	11 24 114 0	KUEHLER EINBAU WASSER
SECHSKANTMUTTER ISO 1051	10540493	80	14	202	11 24 114 1	KUEHLER EINBAU LADELUFT
SECHSKANTMUTTER ISO 1051	10540493	80	2	205	11 28 574 7	WP
SECHSKANTMUTTER ISO 1051	10540493	80	4	207	11 24 114 2	ANSAUGANLAGE LUFT
SECHSKANTMUTTER ISO 1051	10540493	80	2	212	11 24 114 4	KRAFTSTOFFANLAGE
SECHSKANTMUTTER ISO 1051	10540493	102	8	218	11 24 114 5	ANLAGE HARNSTOFF EINBAU
SECHSKANTMUTTER ISO 1051	10540493	41	23	315	11 24 409 0	VERKLEIDUNG OW EINBAU KP
SECHSKANTMUTTER ISO 1051	10540493	85	37	335	11 24 483 7	BEF-TEILE OW
SECHSKANTMUTTER ISO 1051	10540493	26	4	361	10 51 968 6	EZW OW EINBAU KPL
SECHSKANTMUTTER ISO 1051	10540493	13	2	376	99 29 386 14	KONSOLE KPL
SECHSKANTMUTTER ISO 1051	10540493	13	2	377	99 29 434 14	KONSOLE KPL
SECHSKANTMUTTER ISO 1051	10540493	16	8	483	99 26 718 14	PODEST
SECHSKANTMUTTER ISO 1051	10540493	25	64	510	11 23 820 3	ANLENKSTUECK KPL
SECHSKANTMUTTER ISO 1051	10540493	19	6	521	10 58 193 7	GITTERROST KPL
SECHSKANTMUTTER ISO 1051	10540493	15	8	523	99 34 198 14	SCHILD LIEBHERR
SECHSKANTMUTTER ISO 1051	10540493	30	6	552	11 28 390 8	AL BEGEHUNG
SECHSKANTMUTTER ISO 1051	10540493	14	2	553	11 28 391 3	BEFESTIGUNGSCHELLE
SECHSKANTMUTTER ISO 1051	10540493	30	6	568	11 28 583 8	AL BEGEHUNG
SECHSKANTMUTTER ISO 1051	10540493	30	6	575	11 28 626 1	AL BEGEHUNG
SECHSKANTMUTTER ISO 1051	10540493	44	4	581	11 28 629 9	MONTAGETEILE
SECHSKANTMUTTER ISO 1051	10540493	24	2	591	99 30 800 14	SPITZENENDSCHALTER EINBA
SECHSKANTMUTTER ISO 1051	10540493	39	12	593	99 48 521 14	SPITZEN AL KPL
SECHSKANTMUTTER ISO 1051	10540493	42	40	633	10 55 372 1	DACHGELAENDER NRS
SECHSKANTMUTTER ISO 1051	10540493	12	12	635	11 24 147 8	UW PODEST
SECHSKANTMUTTER ISO 1051	10540493	12	12	636	11 24 575 5	PODEST
SECHSKANTMUTTER ISO 1051	10540493	35	2	640	99 10 116 14	SEILFUEHRUNG
SECHSKANTMUTTER ISO 1051	10540493	19	2	647	10 55 601 0	STURZSICHERUNG NRS
SECHSKANTMUTTER ISO 1051	10540493	16	4	649	10 55 280 7	GITTERROST KPL
SECHSKANTMUTTER ISO 1051	10540493	6	2	652	11 23 827 7	SEILSCHUTZ
SECHSKANTMUTTER ISO 1051	10540493	80	1	653	11 30 567 0	TRANSPORTSICHERUNG
SECHSKANTMUTTER ISO 1051	10540493	24	4	659	11 26 901 8	HALTER KPL
SECHSKANTMUTTER ISO 1051	10540493	6	4	666	11 23 619 7	SELBSTVERLADESYSTEM NR
SECHSKANTMUTTER ISO 1051	10540493	24	2	699	10 58 064 7	VIDEOUEBERWACHUNGSANL
SECHSKANTMUTTER ISO 4032	4000383	19	4	483	99 26 718 14	PODEST
SECHSKANTMUTTER ISO 403	11932239	9	4	203	10 57 423 9	KUEHLER MOTOR
SECHSKANTMUTTER ISO 403	411514614	80	6	65	10 56 073 3	KRAFTSTOFFTANK KPL

Bezeichnung	Artikel	Pos.	Menge	Blatt	Baugruppe	Bezeichnung
SECHSKANTMUTTER ISO 403	411514614	82	8	188	11 24 113 8	MOTORLAGER KPL
SECHSKANTMUTTER ISO 403	411514614	81	8	211	11 24 114 3	ABGASANLAGE
SECHSKANTMUTTER ISO 403	411514614	104	6	218	11 24 114 5	ANLAGE HARNSTOFF EINBAU
SECHSKANTMUTTER ISO 403	411514614	20	4	329	10 54 591 0	MOTORABDECKUNG
SECHSKANTMUTTER ISO 403	411514614	32	1	402	11 27 970 6	KABINE KPL
SECHSKANTMUTTER ISO 403	411514614	5	4	711	10 52 293 0	DW GEBER NRS
SECHSKANTMUTTER ISO 403	411514614	80	3	718	11 31 446 3	LADELUFTROHR KPL
SECHSKANTMUTTER ISO 4032	11233292	124	4	30	11 28 647 6	VENTILBLOCK
SECHSKANTMUTTER ISO 403	411516914	85	8	188	11 24 113 8	MOTORLAGER KPL
SECHSKANTMUTTER ISO 403	411516914	25	8	480	11 31 390 8	MITTELTEIL KPL
SECHSKANTMUTTER ISO 403	411516914	43	2	593	99 48 521 14	SPITZEN AL KPL
SECHSKANTMUTTER ISO 403	411516914	21	2	637	11 27 109 7	FANGSTANGE NRS
SECHSKANTMUTTER ISO 4032	10544154	80	10	188	11 24 113 8	MOTORLAGER KPL
SECHSKANTMUTTER ISO 4032	10544158	81	2	188	11 24 113 8	MOTORLAGER KPL
SECHSKANTMUTTER ISO 4032	485546514	50	12	402	11 27 970 6	KABINE KPL
SECHSKANTMUTTER ISO 4032	485546514	7	4	440	11 30 962 5	HALTER KPL
SECHSKANTMUTTER ISO 4032	411551214	2	9	438	97 07 857 03	LIBELLE EINBAU
SECHSKANTMUTTER ISO 4032	411551214	43	2	725	10 52 155 9	MODUL BETANKUNGSANLAG
SECHSKANTMUTTER ISO 4032	411551114	100	2	218	11 24 114 5	ANLAGE HARNSTOFF EINBAU
SECHSKANTMUTTER ISO 4032	411551114	50	9	681	11 89 568 6	SELBSTVERLADESYSTEM NR
SECHSKANTMUTTER ISO 4032	411517114	56	2	402	11 27 970 6	KABINE KPL
SECHSKANTMUTTER ISO 4032	411517114	6	4	439	10 53 756 0	LEUCHTENHALTER KPL
SECHSKANTMUTTER ISO 4032	411517114	32	8	480	11 31 390 8	MITTELTEIL KPL
SECHSKANTMUTTER ISO 4032	411517114	4	4	614	11 22 322 6	MODEM KPL NRS
SECHSKANTMUTTER ISO 4032	411517114	47	10	633	10 55 372 1	DACHGELAENDER NRS
SECHSKANTMUTTER ISO 4032	411517114	23	2	659	11 26 901 8	HALTER KPL
SECHSKANTMUTTER ISO 4032	411515014	83	4	188	11 24 113 8	MOTORLAGER KPL
SECHSKANTMUTTER ISO 4032	411515014	57	7	315	11 24 409 0	VERKLEIDUNG OW EINBAU KP
SECHSKANTMUTTER ISO 4032	411515014	15	26	329	10 54 591 0	MOTORABDECKUNG
SECHSKANTMUTTER ISO 4032	411515014	38	4	402	11 27 970 6	KABINE KPL
SECHSKANTMUTTER ISO 4032	411515014	61	2	633	10 55 372 1	DACHGELAENDER NRS
SECHSKANTMUTTER ISO 4032	411515014	15	4	636	11 24 575 5	PODEST
SECHSKANTMUTTER ISO 4032	411515014	15	2	720	10 52 155 4	BETANKUNGSANLAGE NRS
SECHSKANTMUTTER ISO 403	4900125	30	2	117	10 11 835 0	ANSCHLUSSGEHAEUSE
SECHSKANTMUTTER ISO 704	411880614	83	4	211	11 24 114 3	ABGASANLAGE
SECHSKANTMUTTER ISO 867	4980986	20	1	157	10 12 226 2	RS VERSTELLUNG
SECHSKANTMUTTER ISO 8673	4980548	26	8	115	10 11 834 9	DOPPELV.PUMPE
SECHSKANTMUTTER ISO 867	4980793	6	1	101	11 21 990 5	VERSTELLUNG
SECHSKANTMUTTER M10X1 8	10012557	3	2	246	11 44 800 5	KIPPHEBELBOCK VORM.
SECHSKANTMUTTER M6	11290855	470	2	98	11 24 682 0	VERTEILERGETRIEBE
SECHSKANTMUTTER M6 8	10411094	3	1	297	11 38 664 5	STARTER
SECHSKANTRIPPENMUTTER	10003366	3	1	277	90 78 314	HEIZFLANSCH ANBAU
SECHSKANTSCHRAUBE ASM	409878414	64	4	191	10 57 532 2	ANSAUGROHR OEL KPL
SECHSKANTSCHRAUBE ASME	409878214	62	12	191	10 57 532 2	ANSAUGROHR OEL KPL
SECHSKANTSCHRAUBE DIN	10336008	3	3	307	10 14 637 4	VERSCHLUSSTEILE
SECHSKANTSCHRAUBE DIN 6	10219458	7	4	293	10 14 511 2	ABGASSTUTZEN ANBAU
SECHSKANTSCHRAUBE DIN 6	10219458	3	2	295	10 14 584 5	GENERATOR VORM.
SECHSKANTSCHRAUBE DIN	10333464	2	3	267	10 14 679 7	KRAFTSTOFF-FEINFILTERAN
SECHSKANTSCHRAUBE DIN	10112497	17	1	256	10 13 382 3	ABSAUGPUMPE VORM.
SECHSKANTSCHRAUBE DIN	10112497	2	4	280	10 14 286 0	KLIMAKOMPRESSOR ANBAU
SECHSKANTSCHRAUBE DIN 6	10035580	6	1	228	10 14 768 6	AGGREGATETRAEGER ANBA
SECHSKANTSCHRAUBE DIN 6	10114153	5	9	228	10 14 768 6	AGGREGATETRAEGER ANBA
SECHSKANTSCHRAUBE DIN	10489016	4	6	273	10 14 736 6	LUFTANSAUGROHR ANBAU
SECHSKANTSCHRAUBE DIN	10489016	14	3	288	10 14 601 2	WASSERSAMMELLEITUNG K
SECHSKANTSCHRAUBE DIN	11181806	2	2	298	10 14 286 4	TRANSPORTVORRICHTUNG
SECHSKANTSCHRAUBE DIN 6	10018711	2	4	277	90 78 314	HEIZFLANSCH ANBAU
SECHSKANTSCHRAUBE DIN 6	11656240	6	1	274	10 14 736 9	ANSAUGSTUTZEN ANBAU
SECHSKANTSCHRAUBE DIN 6	11004752	2	3	255	10 13 394 7	ABSAUGPUMPE MIT BEFEST.
SECHSKANTSCHRAUBE DIN 6	11833770	3	2	235	10 15 529 8	OELWANNE VORM.
SECHSKANTSCHRAUBE DIN 6	10005713	2	1	254	10 13 394 5	SCHMIEROELPUMPE

Bezeichnung	Artikel	Pos.	Menge	Blatt	Baugruppe	Bezeichnung
SECHSKANTSCHRAUBE DIN 6	10218013	3	18	251	10 12 948 1	OELKUEHLER ANBAU
SECHSKANTSCHRAUBE DIN 6	11066361	3	2	254	10 13 394 5	SCHMIEROELPUMPE
SECHSKANTSCHRAUBE DIN	11237759	9	4	601	79 04 112 14	UNTERFLASCHE
SECHSKANTSCHRAUBE DIN	10005511	9	1	235	10 15 529 8	OELWANNE VORM.
SECHSKANTSCHRAUBE EN 16	10037312	4	8	228	10 14 768 6	AGGREGATETRAEGER ANBA
SECHSKANTSCHRAUBE EN 1	10113710	4	1	295	10 14 584 5	GENERATOR VORM.
SECHSKANTSCHRAUBE EN 16	10030518	2	4	281	10 14 611 7	ABDECKUNG ANBAU
SECHSKANTSCHRAUBE EN 16	10030518	16	1	288	10 14 601 2	WASSERSAMMELLEITUNG K
SECHSKANTSCHRAUBE EN 16	10030518	18	1	294	10 14 622 4	LADEDRUCKREGELUNG
SECHSKANTSCHRAUBE EN 16	10030518	68	2	305	10 15 028 8	KABELBAUM ANBAU
SECHSKANTSCHRAUBE EN 16	10016908	2	3	12	11 41 737 0	LUFTPRESSER
SECHSKANTSCHRAUBE EN 16	406550714	27	84	331	11 24 922 2	ABDECKUNG UNTERSEITE
SECHSKANTSCHRAUBE EN 16	10014638	3	6	273	10 14 736 6	LUFTANSAUGROHR ANBAU
SECHSKANTSCHRAUBE EN 16	10014638	4	2	280	10 14 286 0	KLIMAKOMPRESSOR ANBAU
SECHSKANTSCHRAUBE EN 16	10101657	6	1	280	10 14 286 0	KLIMAKOMPRESSOR ANBAU
SECHSKANTSCHRAUBE EN 16	10101657	3	4	281	10 14 611 7	ABDECKUNG ANBAU
SECHSKANTSCHRAUBE EN 16	4601426	5	2	295	10 14 584 5	GENERATOR VORM.
SECHSKANTSCHRAUBE EN 1	12207546	52	2	305	10 15 028 8	KABELBAUM ANBAU
SECHSKANTSCHRAUBE EN 1	12207547	15	2	294	10 14 622 4	LADEDRUCKREGELUNG
SECHSKANTSCHRAUBE EN 1	407350208	4	1	247	10 13 475 1	ZYLINDERKOPFDECKEL ANBA
SECHSKANTSCHRAUBE EN 1	407350208	6	1	248	10 12 653 5	ZYLINDERKOPFDECKEL ANBA
SECHSKANTSCHRAUBE EN 1	407350208	5	1	250	10 13 469 6	ZYLINDERKOPFDECKEL ANBA
SECHSKANTSCHRAUBE EN 1	407350208	22	1	270	10 14 588 5	LECKOELRUECKLAUF
SECHSKANTSCHRAUBE EN 1	407350208	16	8	294	10 14 622 4	LADEDRUCKREGELUNG
SECHSKANTSCHRAUBE EN 1	407350208	54	5	305	10 15 028 8	KABELBAUM ANBAU
SECHSKANTSCHRAUBE EN 1	10290537	10	1	14	11 41 475 7	ANBAUTEILE LUFTPRESSER
SECHSKANTSCHRAUBE EN 1	10024115	3	4	282	11 44 013 4	ABDECKUNG VORM.
SECHSKANTSCHRAUBE EN 16	10017158	5	1	234	10 14 844 4	OELWANNE MIT BEFEST.
SECHSKANTSCHRAUBE EN 1	10005078	12	3	239	10 14 671 6	OELLEITUNG VORM.
SECHSKANTSCHRAUBE EN 1	10005078	18	1	270	10 14 588 5	LECKOELRUECKLAUF
SECHSKANTSCHRAUBE EN 1	10005078	17	4	294	10 14 622 4	LADEDRUCKREGELUNG
SECHSKANTSCHRAUBE EN 1	10005078	60	3	305	10 15 028 8	KABELBAUM ANBAU
SECHSKANTSCHRAUBE EN 1	10016906	4	2	267	10 14 679 7	KRAFTSTOFF-FEINFILTERAN
SECHSKANTSCHRAUBE EN 1	10016906	15	2	274	10 14 736 9	ANSAUGSTUTZEN ANBAU
SECHSKANTSCHRAUBE EN 1	10016906	3	4	300	10 11 912 8	VERSCHLUSSTEILE
SECHSKANTSCHRAUBE EN 1	10016906	3	1	301	10 12 843 9	VERSCHLUSSTEILE
SECHSKANTSCHRAUBE EN 1	10016906	61	22	305	10 15 028 8	KABELBAUM ANBAU
SECHSKANTSCHRAUBE EN 1	10009007	2	5	283	10 14 273 4	WASSERPUMPE MIT BEFEST.
SECHSKANTSCHRAUBE EN 1	10009007	3	1	287	10 14 274 4	KUEHLWASSERENTLUEFTUN
SECHSKANTSCHRAUBE EN 1	10007782	10	6	232	10 14 201 8	KURBELGEHAEUSEENTLUEF
SECHSKANTSCHRAUBE EN 1	10007782	10	2	269	10 14 333 9	KRAFTSTOFFLEITUNGEN
SECHSKANTSCHRAUBE EN 1	10007782	63	1	305	10 15 028 8	KABELBAUM ANBAU
SECHSKANTSCHRAUBE EN 1	10113711	2	33	234	10 14 844 4	OELWANNE MIT BEFEST.
SECHSKANTSCHRAUBE EN 1	10440788	8	2	276	10 14 967 6	VERBINDUNGSLEITUNG ANBA
SECHSKANTSCHRAUBE EN 1	10016907	11	3	232	10 14 201 8	KURBELGEHAEUSEENTLUEF
SECHSKANTSCHRAUBE EN 1	10005073	4	4	252	10 12 948 0	OELKUEHLER VORM.
SECHSKANTSCHRAUBE EN 1	10100304	4	2	234	10 14 844 4	OELWANNE MIT BEFEST.
SECHSKANTSCHRAUBE EN 1	10100303	3	5	247	10 13 475 1	ZYLINDERKOPFDECKEL ANBA
SECHSKANTSCHRAUBE EN 1	10100303	3	5	248	10 12 653 5	ZYLINDERKOPFDECKEL ANBA
SECHSKANTSCHRAUBE EN 1	10100303	4	5	250	10 13 469 6	ZYLINDERKOPFDECKEL ANBA
SECHSKANTSCHRAUBE ISO	4002195	61	4	189	10 51 948 1	ANSAUGROHR OEL
SECHSKANTSCHRAUBE ISO	4002195	301	2	668	10 51 973 8	SELBSTVERLADESYSTEM H
SECHSKANTSCHRAUBE ISO 4	4062009	61	4	192	10 58 017 0	RUECKLAUFROHR
SECHSKANTSCHRAUBE ISO	10013916	4	1	279	90 72 906	ZWISCHENRAD KPL.
SECHSKANTSCHRAUBE ISO 4	460023503	60	8	20	11 29 618 6	OW HYDR
SECHSKANTSCHRAUBE ISO	10543975	75	8	511	11 23 820 3	ANLENKSTUECK KPL
SECHSKANTSCHRAUBE ISO	10543975	22	4	552	11 28 390 8	AL BEGEHUNG
SECHSKANTSCHRAUBE ISO	10543975	22	4	568	11 28 583 8	AL BEGEHUNG
SECHSKANTSCHRAUBE ISO	10543975	22	4	575	11 28 626 1	AL BEGEHUNG
SECHSKANTSCHRAUBE ISO	10544017	63	2	188	11 24 113 8	MOTORLAGER KPL

Bezeichnung	Artikel	Pos.	Menge	Blatt	Baugruppe	Bezeichnung
SECHSKANTSCHRAUBE ISO	10544028	10	64	467	11 89 365 0	RAUPENTRAEGER RE KPL
SECHSKANTSCHRAUBE ISO	10544028	10	64	478	11 89 365 1	RAUPENTRAEGER LI KPL
SECHSKANTSCHRAUBE ISO 4	406144514	20	6	341	99 29 803 14	VERZURRUNG BALLAST
SECHSKANTSCHRAUBE ISO 4	10538824	51	6	188	11 24 113 8	MOTORLAGER KPL
SECHSKANTSCHRAUBE ISO 4	10538824	61	2	211	11 24 114 3	ABGASANLAGE
SECHSKANTSCHRAUBE ISO 4	10539960	13	1	664	99 35 606 14	LASCHE KPL
SECHSKANTSCHRAUBE ISO 4	10538826	40	4	633	10 55 372 1	DACHGELAENDER NRS
SECHSKANTSCHRAUBE ISO	406527314	64	2	188	11 24 113 8	MOTORLAGER KPL
SECHSKANTSCHRAUBE ISO	406527314	29	8	581	11 28 629 9	MONTAGETEILE
SECHSKANTSCHRAUBE ISO	406527314	11	4	582	11 28 610 5	ARRETIERUNG KPL
SECHSKANTSCHRAUBE ISO	406527414	16	8	57	10 51 961 6	OELKUEHLER EINBAU
SECHSKANTSCHRAUBE ISO	406527414	3	8	81	10 56 069 4	MODULE EINBAU
SECHSKANTSCHRAUBE ISO	406527414	57	16	188	11 24 113 8	MOTORLAGER KPL
SECHSKANTSCHRAUBE ISO	406518714	17	8	57	10 51 961 6	OELKUEHLER EINBAU
SECHSKANTSCHRAUBE ISO	406518714	56	4	77	10 58 163 4	KABINENAUFHAENGUNG KPL
SECHSKANTSCHRAUBE ISO	406518714	16	4	79	10 56 067 3	BATTERIE EINBAU KPL
SECHSKANTSCHRAUBE ISO	406518714	61	2	207	11 24 114 2	ANSAUGANLAGE LUFT
SECHSKANTSCHRAUBE ISO	406518714	62	10	311	11 24 114 6	ABDECKUNG
SECHSKANTSCHRAUBE ISO	406518714	25	14	402	11 27 970 6	KABINE KPL
SECHSKANTSCHRAUBE ISO	406518714	17	2	510	11 23 820 3	ANLENKSTUECK KPL
SECHSKANTSCHRAUBE ISO	406518714	3	3	541	99 14 137 14	UMLENKROLLE KPL
SECHSKANTSCHRAUBE ISO	406518714	16	8	593	99 48 521 14	SPITZEN AL KPL
SECHSKANTSCHRAUBE ISO 4	11932241	7	12	203	10 57 423 9	KUEHLER MOTOR
SECHSKANTSCHRAUBE ISO 4	4066093	64	8	192	10 58 017 0	RUECKLAUFROHR
SECHSKANTSCHRAUBE ISO	406511914	60	12	60	10 56 070 1	TANK HYDR KPL
SECHSKANTSCHRAUBE ISO	406511914	60	6	191	10 57 532 2	ANSAUGROHR OEL KPL
SECHSKANTSCHRAUBE ISO	406511914	60	1	193	11 24 113 9	ANBAUTEILE DIESELMOTOR
SECHSKANTSCHRAUBE ISO	406511914	65	16	195	11 24 114 0	KUEHLER EINBAU WASSER
SECHSKANTSCHRAUBE ISO	406511914	63	8	202	11 24 114 1	KUEHLER EINBAU LADELUFT
SECHSKANTSCHRAUBE ISO	406511914	87	2	218	11 24 114 5	ANLAGE HARNSTOFF EINBAU
SECHSKANTSCHRAUBE ISO	406511914	61	40	311	11 24 114 6	ABDECKUNG
SECHSKANTSCHRAUBE ISO	406511914	23	35	313	11 24 409 0	VERKLEIDUNG OW EINBAU KP
SECHSKANTSCHRAUBE ISO	406511914	79	24	335	11 24 483 7	BEF-TEILE OW
SECHSKANTSCHRAUBE ISO	406511914	26	2	357	96 96 543 01	WINDENRAHMEN
SECHSKANTSCHRAUBE ISO	406511914	30	2	510	11 23 820 3	ANLENKSTUECK KPL
SECHSKANTSCHRAUBE ISO	406511914	19	12	618	10 51 743 9	SEILEINZIEHWINDE KPL NRS
SECHSKANTSCHRAUBE ISO 4	4066098	67	48	22	11 29 618 6	OW HYDR
SECHSKANTSCHRAUBE ISO 4	4066098	59	12	94	11 24 773 5	AGGREGAT HYDR
SECHSKANTSCHRAUBE ISO 4	4066098	63	12	192	10 58 017 0	RUECKLAUFROHR
SECHSKANTSCHRAUBE ISO	406511614	63	6	8	11 92 958 8	LUFTFUEHRUNG KPL
SECHSKANTSCHRAUBE ISO	406511614	18	2	57	10 51 961 6	OELKUEHLER EINBAU
SECHSKANTSCHRAUBE ISO	406511614	53	2	188	11 24 113 8	MOTORLAGER KPL
SECHSKANTSCHRAUBE ISO	406511614	66	8	195	11 24 114 0	KUEHLER EINBAU WASSER
SECHSKANTSCHRAUBE ISO	406511614	60	14	211	11 24 114 3	ABGASANLAGE
SECHSKANTSCHRAUBE ISO	406511614	60	4	311	11 24 114 6	ABDECKUNG
SECHSKANTSCHRAUBE ISO	406511614	31	28	313	11 24 409 0	VERKLEIDUNG OW EINBAU KP
SECHSKANTSCHRAUBE ISO	406511614	80	46	335	11 24 483 7	BEF-TEILE OW
SECHSKANTSCHRAUBE ISO	406511614	13	16	340	10 52 656 0	MONTAGETEILE
SECHSKANTSCHRAUBE ISO	406511614	94	2	511	11 23 820 3	ANLENKSTUECK KPL
SECHSKANTSCHRAUBE ISO 4	4001246	55	16	20	11 29 618 6	OW HYDR
SECHSKANTSCHRAUBE ISO 4	4001246	52	4	94	11 24 773 5	AGGREGAT HYDR
SECHSKANTSCHRAUBE ISO 4	4001246	6	16	385	10 55 216 1	VERROHRUNG HYDR
SECHSKANTSCHRAUBE ISO 4	4001246	670	4	528	10 51 959 1	VERROHRUNG HYDR
SECHSKANTSCHRAUBE ISO 4	4001246	616	4	668	10 51 973 8	SELBSTVERLADESYSTEM H
SECHSKANTSCHRAUBE ISO	406509314	64	1	8	11 92 958 8	LUFTFUEHRUNG KPL
SECHSKANTSCHRAUBE ISO	406509314	67	6	195	11 24 114 0	KUEHLER EINBAU WASSER
SECHSKANTSCHRAUBE ISO	406509314	64	2	202	11 24 114 1	KUEHLER EINBAU LADELUFT
SECHSKANTSCHRAUBE ISO	406509314	63	2	311	11 24 114 6	ABDECKUNG
SECHSKANTSCHRAUBE ISO	406509314	17	12	329	10 54 591 0	MOTORABDECKUNG
SECHSKANTSCHRAUBE ISO	406509314	81	23	335	11 24 483 7	BEF-TEILE OW

Bezeichnung	Artikel	Pos.	Menge	Blatt	Baugruppe	Bezeichnung
SECHSKANTSCHRAUBE ISO	406509314	87	16	511	11 23 820 3	ANLENKSTUECK KPL
SECHSKANTSCHRAUBE ISO	406509314	14	2	554	11 28 397 7	AUFFANGWANNE KPL
SECHSKANTSCHRAUBE ISO	406509314	14	2	555	11 28 397 8	AUFFANGWANNE KPL
SECHSKANTSCHRAUBE ISO	406509314	14	4	556	11 28 399 5	AUFFANGWANNE KPL
SECHSKANTSCHRAUBE ISO	406509314	14	4	557	11 28 399 7	AUFFANGWANNE KPL
SECHSKANTSCHRAUBE ISO	406509314	12	4	711	10 52 293 0	DW GEBER NRS
SECHSKANTSCHRAUBE ISO 4	11932240	8	4	203	10 57 423 9	KUEHLER MOTOR
SECHSKANTSCHRAUBE ISO	10539971	11	1	591	99 30 800 14	SPITZENENDSCHALTER EINBA
SECHSKANTSCHRAUBE ISO	10539971	45	1	593	99 48 521 14	SPITZEN AL KPL
SECHSKANTSCHRAUBE ISO	406527814	65	4	8	11 92 958 8	LUFTFUEHRUNG KPL
SECHSKANTSCHRAUBE ISO	406527814	45	4	315	11 24 409 0	VERKLEIDUNG OW EINBAU KP
SECHSKANTSCHRAUBE ISO	406527814	82	8	335	11 24 483 7	BEF-TEILE OW
SECHSKANTSCHRAUBE ISO	406527814	4	3	541	99 14 137 14	UMLENKROLLE KPL
SECHSKANTSCHRAUBE ISO	406527814	15	4	647	10 55 601 0	STURZSICHERUNG NRS
SECHSKANTSCHRAUBE ISO	406512014	19	2	57	10 51 961 6	OELKUEHLER EINBAU
SECHSKANTSCHRAUBE ISO	406512014	54	31	315	11 24 409 0	VERKLEIDUNG OW EINBAU KP
SECHSKANTSCHRAUBE ISO	406512014	19	8	329	10 54 591 0	MOTORABDECKUNG
SECHSKANTSCHRAUBE ISO	406512014	83	1	335	11 24 483 7	BEF-TEILE OW
SECHSKANTSCHRAUBE ISO	406512014	14	3	651	11 30 694 4	SCHIENE KPL
SECHSKANTSCHRAUBE ISO	406518614	24	5	313	11 24 409 0	VERKLEIDUNG OW EINBAU KP
SECHSKANTSCHRAUBE ISO	406518614	21	2	329	10 54 591 0	MOTORABDECKUNG
SECHSKANTSCHRAUBE ISO	406518614	47	8	640	99 10 116 14	SEILFUEHRUNG
SECHSKANTSCHRAUBE ISO	10538822	50	8	640	99 10 116 14	SEILFUEHRUNG
SECHSKANTSCHRAUBE ISO	10539959	14	8	329	10 54 591 0	MOTORABDECKUNG
SECHSKANTSCHRAUBE ISO	10539959	41	34	633	10 55 372 1	DACHGELAENDER NRS
SECHSKANTSCHRAUBE ISO	10538823	62	4	207	11 24 114 2	ANSAUGANLAGE LUFT
SECHSKANTSCHRAUBE ISO	10538823	9	4	585	11 28 357 6	MONTAGETEILE
SECHSKANTSCHRAUBE ISO	406511214	88	6	218	11 24 114 5	ANLAGE HARNSTOFF EINBAU
SECHSKANTSCHRAUBE ISO	10539293	17	6	79	10 56 067 3	BATTERIE EINBAU KPL
SECHSKANTSCHRAUBE ISO	10539293	100	1	335	11 24 483 7	BEF-TEILE OW
SECHSKANTSCHRAUBE ISO	10539293	8	2	666	11 23 619 7	SELBSTVERLADESYSTEM NR
SECHSKANTSCHRAUBE ISO	406527914	3	1	68	10 55 268 1	MITNEHMER EINBAU
SECHSKANTSCHRAUBE ISO	406527914	68	4	195	11 24 114 0	KUEHLER EINBAU WASSER
SECHSKANTSCHRAUBE ISO	406527914	14	2	546	10 35 063 3	HALTERUNG
SECHSKANTSCHRAUBE ISO	406527914	38	16	633	10 55 372 1	DACHGELAENDER NRS
SECHSKANTSCHRAUBE ISO	10539294	14	2	647	10 55 601 0	STURZSICHERUNG NRS
SECHSKANTSCHRAUBE ISO	406512114	14	2	545	99 29 588 14	AUFLAGE
SECHSKANTSCHRAUBE ISO 4	10538834	24	8	480	11 31 390 8	MITTELTEIL KPL
SECHSKANTSCHRAUBE ISO	406528014	5	2	439	10 53 756 0	LEUCHTENHALTER KPL
SECHSKANTSCHRAUBE ISO	406517714	21	2	77	10 58 163 4	KABINENAUFHAENGUNG KPL
SECHSKANTSCHRAUBE ISO	406517714	65	2	202	11 24 114 1	KUEHLER EINBAU LADELUFT
SECHSKANTSCHRAUBE ISO	406517714	23	12	341	99 29 803 14	VERZURRUNG BALLAST
SECHSKANTSCHRAUBE ISO 4	4980977	46	4	151	10 12 224 5	RS HEBEL
SECHSKANTSCHRAUBE ISO	406517914	56	4	188	11 24 113 8	MOTORLAGER KPL
SECHSKANTSCHRAUBE ISO	406517914	24	7	467	11 89 365 0	RAUPENTRAEGER RE KPL
SECHSKANTSCHRAUBE ISO	406517914	24	7	478	11 89 365 1	RAUPENTRAEGER LI KPL
SECHSKANTSCHRAUBE ISO	406517914	14	8	538	11 24 444 4	A-BOCK 1 KPL
SECHSKANTSCHRAUBE ISO	406517914	28	8	590	99 23 398 14	ROLLENSATZ
SECHSKANTSCHRAUBE ISO 4	4066124	56	12	94	11 24 773 5	AGGREGAT HYDR
SECHSKANTSCHRAUBE ISO	406517314	62	12	60	10 56 070 1	TANK HYDR KPL
SECHSKANTSCHRAUBE ISO	406517314	73	3	335	11 24 483 7	BEF-TEILE OW
SECHSKANTSCHRAUBE ISO	406517314	51	4	357	96 96 543 01	WINDENRAHMEN
SECHSKANTSCHRAUBE ISO	406517314	2	8	370	99 29 258 14	EZW ROLLENPAKET
SECHSKANTSCHRAUBE ISO	406517314	15	2	442	99 18 041 14	VERZURRUNG OW
SECHSKANTSCHRAUBE ISO	406517314	18	152	467	11 89 365 0	RAUPENTRAEGER RE KPL
SECHSKANTSCHRAUBE ISO	406517314	18	152	478	11 89 365 1	RAUPENTRAEGER LI KPL
SECHSKANTSCHRAUBE ISO	406517314	22	16	480	11 31 390 8	MITTELTEIL KPL
SECHSKANTSCHRAUBE ISO	406517314	16	4	497	11 22 050 0	WINDEN EINBAU
SECHSKANTSCHRAUBE ISO	406517314	16	4	503	11 22 050 1	WINDEN EINBAU
SECHSKANTSCHRAUBE ISO	406517314	16	4	510	11 23 820 3	ANLENKSTUECK KPL

Bezeichnung	Artikel	Pos.	Menge	Blatt	Baugruppe	Bezeichnung
SECHSKANTSCHRAUBE ISO	406517314	15	2	593	99 48 521 14	SPITZEN AL KPL
SECHSKANTSCHRAUBE ISO	406517314	20	2	637	11 27 109 7	FANGSTANGE NRS
SECHSKANTSCHRAUBE ISO 4	4066122	65	8	22	11 29 618 6	OW HYDR
SECHSKANTSCHRAUBE ISO 4	4066122	65	6	192	10 58 017 0	RUECKLAUFROHR
SECHSKANTSCHRAUBE ISO	406518414	89	1	218	11 24 114 5	ANLAGE HARNSTOFF EINBAU
SECHSKANTSCHRAUBE ISO	406518414	18	4	510	11 23 820 3	ANLENKSTUECK KPL
SECHSKANTSCHRAUBE ISO 4	4600366	61	36	22	11 29 618 6	OW HYDR
SECHSKANTSCHRAUBE ISO 4	4600366	640	8	345	10 51 969 8	NADELEINZIEHWINDE HYDR
SECHSKANTSCHRAUBE ISO 4	4600366	7	8	385	10 55 216 1	VERROHRUNG HYDR
SECHSKANTSCHRAUBE ISO	406511414	67	8	188	11 24 113 8	MOTORLAGER KPL
SECHSKANTSCHRAUBE ISO	406511414	60	6	189	10 51 948 1	ANSAUGROHR OEL
SECHSKANTSCHRAUBE ISO	406511414	22	3	361	10 51 968 6	EZW OW EINBAU KPL
SECHSKANTSCHRAUBE ISO	406511414	49	2	510	11 23 820 3	ANLENKSTUECK KPL
SECHSKANTSCHRAUBE ISO 4	4600706	17	4	343	10 51 969 7	NADELEINZIEHWINDE
SECHSKANTSCHRAUBE ISO	406519214	62	4	211	11 24 114 3	ABGASANLAGE
SECHSKANTSCHRAUBE ISO	406512614	66	1	202	11 24 114 1	KUEHLER EINBAU LADELUFT
SECHSKANTSCHRAUBE ISO	406512614	16	4	559	11 94 087 8	MONTAGEEINHEIT
SECHSKANTSCHRAUBE ISO 4	4902260	60	10	192	10 58 017 0	RUECKLAUFROHR
SECHSKANTSCHRAUBE ISO	406527614	35	4	77	10 58 163 4	KABINENAUFHAENGUNG KPL
SECHSKANTSCHRAUBE ISO 4	10554335	54	8	20	11 29 618 6	OW HYDR
SECHSKANTSCHRAUBE ISO	406527714	13	2	637	11 27 109 7	FANGSTANGE NRS
SECHSKANTSCHRAUBE ISO	10538830	74	8	335	11 24 483 7	BEF-TEILE OW
SECHSKANTSCHRAUBE ISO	10539311	6	6	362	10 51 968 7	HAUPT EZW HYDR
SECHSKANTSCHRAUBE ISO 4	10539300	62	24	22	11 29 618 6	OW HYDR
SECHSKANTSCHRAUBE ISO 4	10539300	615	2	362	10 51 968 7	HAUPT EZW HYDR
SECHSKANTSCHRAUBE ISO 4	10539300	19	16	446	11 89 300 5	VERROHRUNG HYDR
SECHSKANTSCHRAUBE ISO 4	10539300	750	8	486	11 26 260 6	WINDE 1 HYDR
SECHSKANTSCHRAUBE ISO 4	10539300	750	16	501	11 26 261 1	WINDE 2 HYDR
SECHSKANTSCHRAUBE ISO 4	10539305	17	8	446	11 89 300 5	VERROHRUNG HYDR
SECHSKANTSCHRAUBE ISO 4	10539307	10	4	486	11 26 260 6	WINDE 1 HYDR
SECHSKANTSCHRAUBE ISO 4	10539307	10	4	501	11 26 261 1	WINDE 2 HYDR
SECHSKANTSCHRAUBE ISO	10543914	62	2	188	11 24 113 8	MOTORLAGER KPL
SECHSKANTSCHRAUBE ISO 4	10539315	62	4	193	11 24 113 9	ANBAUTEILE DIESELMOTOR
SECHSKANTSCHRAUBE ISO 4	10539315	29	2	361	10 51 968 6	EZW OW EINBAU KPL
SECHSKANTSCHRAUBE ISO 4	10539315	35	4	467	11 89 365 0	RAUPENTRAEGER RE KPL
SECHSKANTSCHRAUBE ISO 4	10539315	35	4	478	11 89 365 1	RAUPENTRAEGER LI KPL
SECHSKANTSCHRAUBE ISO 4	10539316	4	4	68	10 55 268 1	MITNEHMER EINBAU
SECHSKANTSCHRAUBE ISO 4	10539316	30	8	681	11 89 568 6	SELBSTVERLADESYSTEM NR
SECHSKANTSCHRAUBE ISO 4	10539317	60	6	64	10 56 073 2	KRAFTSTOFFTANK EINBAU
SECHSKANTSCHRAUBE ISO 4	10539317	59	8	188	11 24 113 8	MOTORLAGER KPL
SECHSKANTSCHRAUBE ISO 4	10539317	103	2	335	11 24 483 7	BEF-TEILE OW
SECHSKANTSCHRAUBE ISO 4	10539317	52	54	467	11 89 365 0	RAUPENTRAEGER RE KPL
SECHSKANTSCHRAUBE ISO 4	10539317	52	54	478	11 89 365 1	RAUPENTRAEGER LI KPL
SECHSKANTSCHRAUBE ISO 4	10539317	31	2	590	99 23 398 14	ROLLENSATZ
SECHSKANTSCHRAUBE ISO 4	10539318	58	8	188	11 24 113 8	MOTORLAGER KPL
SECHSKANTSCHRAUBE ISO 4	10539318	7	8	357	96 96 543 01	WINDENRAHMEN
SECHSKANTSCHRAUBE ISO 4	10539318	17	28	480	11 31 390 8	MITTELTEIL KPL
SECHSKANTSCHRAUBE ISO 4	10539318	38	2	590	99 23 398 14	ROLLENSATZ
SECHSKANTSCHRAUBE ISO 4	10543902	60	12	188	11 24 113 8	MOTORLAGER KPL
SECHSKANTSCHRAUBE ISO 4	10543902	31	10	350	93 88 500 01	SEILTROMMEL
SECHSKANTSCHRAUBE ISO 4	10543902	11	4	357	96 96 543 01	WINDENRAHMEN
SECHSKANTSCHRAUBE ISO 4	10543902	15	4	382	10 51 968 2	DW OW
SECHSKANTSCHRAUBE ISO 4	10543902	39	4	590	99 23 398 14	ROLLENSATZ
SECHSKANTSCHRAUBE ISO 4	10543903	62	3	58	10 56 070 0	TANK HYDR EINBAU
SECHSKANTSCHRAUBE ISO 4	10543903	3	28	357	96 96 543 01	WINDENRAHMEN
SECHSKANTSCHRAUBE ISO 4	10543903	13	4	361	10 51 968 6	EZW OW EINBAU KPL
SECHSKANTSCHRAUBE ISO 4	10543904	63	3	58	10 56 070 0	TANK HYDR EINBAU
SECHSKANTSCHRAUBE ISO 4	10543905	61	8	188	11 24 113 8	MOTORLAGER KPL
SECHSKANTSCHRAUBE ISO 4	10543905	28	12	361	10 51 968 6	EZW OW EINBAU KPL
SECHSKANTSCHRAUBE ISO 4	10543907	57	4	94	11 24 773 5	AGGREGAT HYDR

Bezeichnung	Artikel	Pos.	Menge	Blatt	Baugruppe	Bezeichnung
SECHSKANTSCHRAUBE ISO 4	10543910	27	8	467	11 89 365 0	RAUPENTRAEGER RE KPL
SECHSKANTSCHRAUBE ISO 4	10543910	27	8	478	11 89 365 1	RAUPENTRAEGER LI KPL
SECHSKANTSCHRAUBE ISO	10543932	4	4	467	11 89 365 0	RAUPENTRAEGER RE KPL
SECHSKANTSCHRAUBE ISO	10543932	4	4	478	11 89 365 1	RAUPENTRAEGER LI KPL
SECHSKANTSCHRAUBE ISO 4	10543917	4	1	498	10 57 462 9	BOLZEN KPL
SECHSKANTSCHRAUBE ISO 4	10543918	48	2	640	99 10 116 14	SEILFUEHRUNG
SECHSKANTSCHRAUBE ISO 4	10543919	63	2	207	11 24 114 2	ANSAUGANLAGE LUFT
SECHSKANTSCHRAUBE ISO 4	10543919	48	2	538	11 24 444 4	A-BOCK 1 KPL
SECHSKANTSCHRAUBE ISO 4	10543919	51	2	640	99 10 116 14	SEILFUEHRUNG
SECHSKANTSCHRAUBE ISO 4	10543920	14	22	361	10 51 968 6	EZW OW EINBAU KPL
SECHSKANTSCHRAUBE ISO 4	10543920	44	4	467	11 89 365 0	RAUPENTRAEGER RE KPL
SECHSKANTSCHRAUBE ISO 4	10543920	87	2	471	96 93 178 01	FAHRANTRIEB
SECHSKANTSCHRAUBE ISO 4	10543920	41	4	478	11 89 365 1	RAUPENTRAEGER LI KPL
SECHSKANTSCHRAUBE ISO 4	10543921	18	4	480	11 31 390 8	MITTELTEIL KPL
SECHSKANTSCHRAUBE ISO 4	10543921	49	2	538	11 24 444 4	A-BOCK 1 KPL
SECHSKANTSCHRAUBE ISO 4	10543922	58	4	94	11 24 773 5	AGGREGAT HYDR
SECHSKANTSCHRAUBE ISO 4	10543922	25	4	618	10 51 743 9	SEILEINZIEHWINDE KPL NRS
SECHSKANTSCHRAUBE ISO 4	10543924	15	4	497	11 22 050 0	WINDEN EINBAU
SECHSKANTSCHRAUBE ISO 4	10543924	15	4	503	11 22 050 1	WINDEN EINBAU
SECHSKANTSCHRAUBE ISO 4	10543925	68	12	471	96 93 178 01	FAHRANTRIEB
SECHSKANTSCHRAUBE ISO 4	10545854	22	2	467	11 89 365 0	RAUPENTRAEGER RE KPL
SECHSKANTSCHRAUBE ISO 4	10545854	22	2	478	11 89 365 1	RAUPENTRAEGER LI KPL
SECHSKANTSCHRAUBE ISO 4	10545854	47	4	538	11 24 444 4	A-BOCK 1 KPL
SECHSKANTSCHRAUBE ISO 4	10543944	25	12	467	11 89 365 0	RAUPENTRAEGER RE KPL
SECHSKANTSCHRAUBE ISO 4	10543944	25	12	478	11 89 365 1	RAUPENTRAEGER LI KPL
SECHSKANTSCHRAUBE ISO 4	11250998	468	8	98	11 24 682 0	VERTEILERGETRIEBE
SECHSKANTSCHRAUBE ISO 4	485553914	16	3	711	10 52 293 0	DW GEBER NRS
SECHSKANTSCHRAUBE ISO 4	406501814	22	2	79	10 56 067 3	BATTERIE EINBAU KPL
SECHSKANTSCHRAUBE ISO 4	406501814	62	8	510	11 23 820 3	ANLENKSTUECK KPL
SECHSKANTSCHRAUBE ISO 4	10567564	33	3	681	11 89 568 6	SELBSTVERLADESYSTEM NR
SECHSKANTSCHRAUBE ISO 4	485557714	36	3	350	93 88 500 01	SEILTROMMEL
SECHSKANTSCHRAUBE ISO 4	485557714	29	8	402	11 27 970 6	KABINE KPL
SECHSKANTSCHRAUBE ISO 4	485557714	5	2	614	11 22 322 6	MODEM KPL NRS
SECHSKANTSCHRAUBE ISO 4	406501714	79	5	218	11 24 114 5	ANLAGE HARNSTOFF EINBAU
SECHSKANTSCHRAUBE ISO 4	406501714	22	5	402	11 27 970 6	KABINE KPL
SECHSKANTSCHRAUBE ISO 4	406501714	4	8	439	10 53 756 0	LEUCHTENHALTER KPL
SECHSKANTSCHRAUBE ISO 4	406501714	18	3	699	10 58 064 7	VIDEOUEBERWACHUNGSANL
SECHSKANTSCHRAUBE ISO 4	406532614	68	1	335	11 24 483 7	BEF-TEILE OW
SECHSKANTSCHRAUBE ISO 4	406532614	13	3	497	11 22 050 0	WINDEN EINBAU
SECHSKANTSCHRAUBE ISO 4	406532614	13	3	503	11 22 050 1	WINDEN EINBAU
SECHSKANTSCHRAUBE ISO 4	406532614	60	24	510	11 23 820 3	ANLENKSTUECK KPL
SECHSKANTSCHRAUBE ISO 4	406532614	13	18	521	10 58 193 7	GITTERROST KPL
SECHSKANTSCHRAUBE ISO 4	406532614	30	8	538	11 24 444 4	A-BOCK 1 KPL
SECHSKANTSCHRAUBE ISO 4	406532614	24	2	618	10 51 743 9	SEILEINZIEHWINDE KPL NRS
SECHSKANTSCHRAUBE ISO 4	406532614	22	2	649	10 55 280 7	GITTERROST KPL
SECHSKANTSCHRAUBE ISO 4	406532614	20	2	657	10 55 514 8	STURZSICHERUNG NRS
SECHSKANTSCHRAUBE ISO 4	406532614	17	2	659	11 26 901 8	HALTER KPL
SECHSKANTSCHRAUBE ISO 4	406532614	21	3	699	10 58 064 7	VIDEOUEBERWACHUNGSANL
SECHSKANTSCHRAUBE ISO 4	406532614	4	4	711	10 52 293 0	DW GEBER NRS
SECHSKANTSCHRAUBE ISO 4	406518514	63	3	211	11 24 114 3	ABGASANLAGE
SECHSKANTSCHRAUBE ISO 4	406518514	80	10	218	11 24 114 5	ANLAGE HARNSTOFF EINBAU
SECHSKANTSCHRAUBE ISO 4	10538797	2	4	614	11 22 322 6	MODEM KPL NRS
SECHSKANTSCHRAUBE ISO 4	406551114	69	2	335	11 24 483 7	BEF-TEILE OW
SECHSKANTSCHRAUBE ISO 4	10538799	83	2	218	11 24 114 5	ANLAGE HARNSTOFF EINBAU
SECHSKANTSCHRAUBE ISO 4	10538799	12	2	616	11 21 552 4	WINKELANZEIGE NRS
SECHSKANTSCHRAUBE ISO 4	10526837	84	2	218	11 24 114 5	ANLAGE HARNSTOFF EINBAU
SECHSKANTSCHRAUBE ISO 4	10526837	55	1	402	11 27 970 6	KABINE KPL
SECHSKANTSCHRAUBE ISO 4	10526837	13	16	480	11 31 390 8	MITTELTEIL KPL
SECHSKANTSCHRAUBE ISO 4	10538800	60	2	8	11 92 958 8	LUFTFUEHRUNG KPL
SECHSKANTSCHRAUBE ISO 4	10538801	31	8	480	11 31 390 8	MITTELTEIL KPL

Bezeichnung	Artikel	Pos.	Menge	Blatt	Baugruppe	Bezeichnung
SECHSKANTSCHRAUBE ISO	10538796	12	2	658	10 55 722 4	STURZSICHERUNG NRS
SECHSKANTSCHRAUBE ISO 4	10538806	33	2	640	99 10 116 14	SEILFUEHRUNG
SECHSKANTSCHRAUBE ISO	10538812	29	4	510	11 23 820 3	ANLENKSTUECK KPL
SECHSKANTSCHRAUBE ISO 4	406501614	10	4	582	11 28 610 5	ARRETIERUNG KPL
SECHSKANTSCHRAUBE ISO 4	406501514	11	2	75	92 65 477 14	FEUERLOESCHER NRS
SECHSKANTSCHRAUBE ISO 4	406501514	66	6	77	10 58 163 4	KABINENAUFHAENGUNG KPL
SECHSKANTSCHRAUBE ISO 4	406501514	59	6	195	11 24 114 0	KUEHLER EINBAU WASSER
SECHSKANTSCHRAUBE ISO 4	406501514	18	6	382	10 51 968 2	DW OW
SECHSKANTSCHRAUBE ISO 4	406501514	39	14	402	11 27 970 6	KABINE KPL
SECHSKANTSCHRAUBE ISO 4	406501514	3	2	440	11 30 962 5	HALTER KPL
SECHSKANTSCHRAUBE ISO 4	406501514	32	4	681	11 89 568 6	SELBSTVERLADESYSTEM NR
SECHSKANTSCHRAUBE ISO 4	406501514	6	1	700	10 57 848 6	MONITOR KABINE ANBAU
SECHSKANTSCHRAUBE ISO 4	406518814	54	4	188	11 24 113 8	MOTORLAGER KPL
SECHSKANTSCHRAUBE ISO 4	406518814	81	4	218	11 24 114 5	ANLAGE HARNSTOFF EINBAU
SECHSKANTSCHRAUBE ISO 4	406518814	94	8	335	11 24 483 7	BEF-TEILE OW
SECHSKANTSCHRAUBE ISO 4	406518814	23	4	535	11 27 536 5	RUECKFALLSTUETZEN EINBA
SECHSKANTSCHRAUBE ISO 4	406518814	20	6	699	10 58 064 7	VIDEOUEBERWACHUNGSANL
SECHSKANTSCHRAUBE ISO 4	406518814	14	3	711	10 52 293 0	DW GEBER NRS
SECHSKANTSCHRAUBE ISO 4	406501414	61	4	8	11 92 958 8	LUFTFUEHRUNG KPL
SECHSKANTSCHRAUBE ISO 4	406501414	65	8	188	11 24 113 8	MOTORLAGER KPL
SECHSKANTSCHRAUBE ISO 4	406501414	60	4	202	11 24 114 1	KUEHLER EINBAU LADELUFT
SECHSKANTSCHRAUBE ISO 4	406501414	60	2	205	11 28 574 7	WP
SECHSKANTSCHRAUBE ISO 4	406501414	60	4	207	11 24 114 2	ANSAUGANLAGE LUFT
SECHSKANTSCHRAUBE ISO 4	406501414	78	1	218	11 24 114 5	ANLAGE HARNSTOFF EINBAU
SECHSKANTSCHRAUBE ISO 4	406501414	35	11	313	11 24 409 0	VERKLEIDUNG OW EINBAU KP
SECHSKANTSCHRAUBE ISO 4	406501414	95	2	335	11 24 483 7	BEF-TEILE OW
SECHSKANTSCHRAUBE ISO 4	406501414	15	2	343	10 51 969 7	NADELEINZIEHWINDE
SECHSKANTSCHRAUBE ISO 4	406501414	26	19	402	11 27 970 6	KABINE KPL
SECHSKANTSCHRAUBE ISO 4	406501414	11	6	480	11 31 390 8	MITTELTEIL KPL
SECHSKANTSCHRAUBE ISO 4	406501414	69	11	510	11 23 820 3	ANLENKSTUECK KPL
SECHSKANTSCHRAUBE ISO 4	406501414	25	1	552	11 28 390 8	AL BEGEHUNG
SECHSKANTSCHRAUBE ISO 4	406501414	25	1	568	11 28 583 8	AL BEGEHUNG
SECHSKANTSCHRAUBE ISO 4	406501414	25	1	575	11 28 626 1	AL BEGEHUNG
SECHSKANTSCHRAUBE ISO 4	406501414	22	4	618	10 51 743 9	SEILEINZIEHWINDE KPL NRS
SECHSKANTSCHRAUBE ISO 4	406501414	45	40	633	10 55 372 1	DACHGELAENDER NRS
SECHSKANTSCHRAUBE ISO 4	406501414	33	2	699	10 58 064 7	VIDEOUEBERWACHUNGSANL
SECHSKANTSCHRAUBE ISO	4062002	64	16	22	11 29 618 6	OW HYDR
SECHSKANTSCHRAUBE ISO 4	406501314	12	2	71	11 26 557 2	MONTAGETEILE
SECHSKANTSCHRAUBE ISO 4	406501314	28	2	77	10 58 163 4	KABINENAUFHAENGUNG KPL
SECHSKANTSCHRAUBE ISO 4	406501314	66	2	188	11 24 113 8	MOTORLAGER KPL
SECHSKANTSCHRAUBE ISO 4	406501314	63	8	195	11 24 114 0	KUEHLER EINBAU WASSER
SECHSKANTSCHRAUBE ISO 4	406501314	61	6	202	11 24 114 1	KUEHLER EINBAU LADELUFT
SECHSKANTSCHRAUBE ISO 4	406501314	82	4	218	11 24 114 5	ANLAGE HARNSTOFF EINBAU
SECHSKANTSCHRAUBE ISO 4	406501314	96	10	335	11 24 483 7	BEF-TEILE OW
SECHSKANTSCHRAUBE ISO 4	406501314	20	4	483	99 26 718 14	PODEST
SECHSKANTSCHRAUBE ISO 4	406501314	21	10	510	11 23 820 3	ANLENKSTUECK KPL
SECHSKANTSCHRAUBE ISO 4	406501314	34	4	593	99 48 521 14	SPITZEN AL KPL
SECHSKANTSCHRAUBE ISO 4	406501314	21	6	618	10 51 743 9	SEILEINZIEHWINDE KPL NRS
SECHSKANTSCHRAUBE ISO 4	406501314	32	2	640	99 10 116 14	SEILFUEHRUNG
SECHSKANTSCHRAUBE ISO 4	406501314	18	2	647	10 55 601 0	STURZSICHERUNG NRS
SECHSKANTSCHRAUBE ISO 4	406517614	62	4	202	11 24 114 1	KUEHLER EINBAU LADELUFT
SECHSKANTSCHRAUBE ISO 4	406517614	97	2	335	11 24 483 7	BEF-TEILE OW
SECHSKANTSCHRAUBE ISO 4	406517614	14	4	649	10 55 280 7	GITTERROST KPL
SECHSKANTSCHRAUBE ISO 4	406517614	13	2	720	10 52 155 4	BETANKUNGSANLAGE NRS
SECHSKANTSCHRAUBE ISO 4	11932242	6	1	203	10 57 423 9	KUEHLER MOTOR
SECHSKANTSCHRAUBE ISO 4	406532914	98	1	335	11 24 483 7	BEF-TEILE OW
SECHSKANTSCHRAUBE ISO 4	406532914	18	2	521	10 58 193 7	GITTERROST KPL
SECHSKANTSCHRAUBE ISO 4	406532914	27	4	581	11 28 629 9	MONTAGETEILE
SECHSKANTSCHRAUBE ISO 4	406532914	61	1	653	11 30 567 0	TRANSPORTSICHERUNG
SECHSKANTSCHRAUBE ISO 4	406508014	61	3	510	11 23 820 3	ANLENKSTUECK KPL

Bezeichnung	Artikel	Pos.	Menge	Blatt	Baugruppe	Bezeichnung
SECHSKANTSCHRAUBE ISO 4	406508014	46	2	633	10 55 372 1	DACHGELAENDER NRS
SECHSKANTSCHRAUBE ISO 4	10538807	36	5	313	11 24 409 0	VERKLEIDUNG OW EINBAU KP
SECHSKANTSCHRAUBE ISO 4	10538807	13	16	483	99 26 718 14	PODEST
SECHSKANTSCHRAUBE ISO 4	10538807	54	17	510	11 23 820 3	ANLENKSTUECK KPL
SECHSKANTSCHRAUBE ISO 4	10538807	24	3	552	11 28 390 8	AL BEGEHUNG
SECHSKANTSCHRAUBE ISO 4	10538807	24	3	568	11 28 583 8	AL BEGEHUNG
SECHSKANTSCHRAUBE ISO 4	10538807	24	3	575	11 28 626 1	AL BEGEHUNG
SECHSKANTSCHRAUBE ISO 4	10538807	11	12	635	11 24 147 8	UW PODEST
SECHSKANTSCHRAUBE ISO 4	10538807	11	16	636	11 24 575 5	PODEST
SECHSKANTSCHRAUBE ISO 4	10331506	39	6	313	11 24 409 0	VERKLEIDUNG OW EINBAU KP
SECHSKANTSCHRAUBE ISO 4	10331506	20	19	510	11 23 820 3	ANLENKSTUECK KPL
SECHSKANTSCHRAUBE ISO 4	10331506	13	8	523	99 34 198 14	SCHILD LIEBHERR
SECHSKANTSCHRAUBE ISO 4	10538808	49	2	593	99 48 521 14	SPITZEN AL KPL
SECHSKANTSCHRAUBE ISO 4	10331507	11	6	329	10 54 591 0	MOTORABDECKUNG
SECHSKANTSCHRAUBE ISO 4	10331507	10	2	376	99 29 386 14	KONSOLE KPL
SECHSKANTSCHRAUBE ISO 4	10331507	10	2	377	99 29 434 14	KONSOLE KPL
SECHSKANTSCHRAUBE ISO 4	10331507	13	2	553	11 28 391 3	BEFESTIGUNGSCHELLE
SECHSKANTSCHRAUBE ISO 4	10331507	17	2	591	99 30 800 14	SPITZENENDSCHALTER EINBA
SECHSKANTSCHRAUBE ISO 4	10331507	18	4	659	11 26 901 8	HALTER KPL
SECHSKANTSCHRAUBE ISO 4	10541592	22	4	666	11 23 619 7	SELBSTVERLADESYSTEM NR
SECHSKANTSCHRAUBE ISO 4	10538809	50	2	188	11 24 113 8	MOTORLAGER KPL
SECHSKANTSCHRAUBE ISO 4	10538809	64	2	195	11 24 114 0	KUEHLER EINBAU WASSER
SECHSKANTSCHRAUBE ISO 4	10538809	60	2	212	11 24 114 4	KRAFTSTOFFANLAGE
SECHSKANTSCHRAUBE ISO 4	10538809	13	2	551	11 28 725 5	SEILSCHUTZ KPL
SECHSKANTSCHRAUBE ISO 4	10541593	85	6	218	11 24 114 5	ANLAGE HARNSTOFF EINBAU
SECHSKANTSCHRAUBE ISO 4	10541593	42	4	593	99 48 521 14	SPITZEN AL KPL
SECHSKANTSCHRAUBE ISO 4	10538810	37	2	510	11 23 820 3	ANLENKSTUECK KPL
SECHSKANTSCHRAUBE ISO	407003014	66	3	8	11 92 958 8	LUFTFUEHRUNG KPL
SECHSKANTSCHRAUBE ISO	406154014	30	45	467	11 89 365 0	RAUPENTRAEGER RE KPL
SECHSKANTSCHRAUBE ISO	406154014	30	45	478	11 89 365 1	RAUPENTRAEGER LI KPL
SECHSRUNDSCHRAUBE M10X	10138772	5	24	289	10 14 144 4	ABGASROHR ANBAU
SECHSRUNDSCHRAUBE M16	10118912	4	10	303	10 11 892 9	SCHWUNGRAD ANBAU
SECHSRUNDSCHRAUBE M16	10125439	3	6	244	10 13 176 8	ZYL KOPF ANBAU
SECHSRUNDSCHRAUBE M8X	10127323	9	13	293	10 14 511 2	ABGASSTUTZEN ANBAU
SECHSRUNDSCHRAUBE M8X2	10118695	3	4	291	10 14 737 0	HITZESCHUTZ MIT BEFEST.
SECHSRUNDSCHRAUBE M8X	10125702	9	2	276	10 14 967 6	VERBINDUNGSLEITUNG ANBA
SEIL	773400508	18	0.6	637	11 27 109 7	FANGSTANGE NRS
SEIL	774730714	12	40	358	99 23 387 14	BESEILUNG EZW NADEL AL
SEIL	774762314	11	1	618	10 51 743 9	SEILEINZIEHWINDE KPL NRS
SEIL LI	11227045	10	1	381	11 22 703 7	BESEILUNG EZW HAUPT AL
SEIL LI	790517014	122	1	3	01 38 376 14	LR 1300 SX
SEIL LI	790517214	121	1	3	01 38 376 14	LR 1300 SX
SEIL RE	10227828	10	1	358	99 23 387 14	BESEILUNG EZW NADEL AL
SEILEINZIEHWINDE KPL NRS	10517439	550	1	3	01 38 376 14	LR 1300 SX
SEILEINZUGSWINDE HYDR NR	10542516	2	1	618	10 51 743 9	SEILEINZIEHWINDE KPL NRS
SEILFESTPUNKT	11481158	5	1	601	79 04 112 14	UNTERFLASCHE
SEILFESTPUNKT	11491267	5	1	608	79 05 205 14	UNTERFLASCHE
SEILFUEHRUNG	991011614	605	1	3	01 38 376 14	LR 1300 SX
SEILFUEHRUNG SCHWK	991011714	10	1	640	99 10 116 14	SEILFUEHRUNG
SEILFUEHRUNG SCHWK NRS	11248258	23	1	593	99 48 521 14	SPITZEN AL KPL
SEILHALTERUNG NRS	11236266	680	2	4	01 38 376 14	LR 1300 SX
SEILKLEMME	540271714	5	1	626	54 02 702 14	SEILTROMMEL KPL
SEILKLEMME	773910114	19	2	637	11 27 109 7	FANGSTANGE NRS
SEILROLLE	10504352	1	1	601	79 04 112 14	UNTERFLASCHE
SEILROLLE	10504352	1	5	608	79 05 205 14	UNTERFLASCHE
SEILROLLE	967217003	1	1	623	96 72 161 03	SEILROLLE KPL
SEILROLLE KPL	790202014	10	10	590	99 23 398 14	ROLLENSATZ
SEILROLLE KPL	790202014	22	1	593	99 48 521 14	SPITZEN AL KPL
SEILROLLE KPL	790202014	1	1	598	91 89 071 14	SPITZEN AL UMBAU
SEILROLLE KPL	914690714	4	12	370	99 29 258 14	EZW ROLLENPAKET

Bezeichnung	Artikel	Pos.	Menge	Blatt	Baugruppe	Bezeichnung
SEILROLLE KPL	914690714	13	13	538	11 24 444 4	A-BOCK 1 KPL
SEILROLLE KPL	914941914	13	4	640	99 10 116 14	SEILFUEHRUNG
SEILROLLE KPL	915523714	12	1	590	99 23 398 14	ROLLENSATZ
SEILROLLE KPL	915523714	12	1	640	99 10 116 14	SEILFUEHRUNG
SEILROLLE KPL	919279914	11	3	590	99 23 398 14	ROLLENSATZ
SEILROLLE KPL	967216103	14	2	618	10 51 743 9	SEILEINZIEHWINDE KPL NRS
SEILSCHEIBE	11271491	1	1	602	10 50 435 2	SEILROLLE
SEILSCHUTZ	11238277	17	1	650	11 29 473 7	LAUFSTEG ZWISCHENSTUEC
SEILSCHUTZ	11238277	18	2	654	11 29 474 2	LAUFSTEG ZWISCHENSTUEC
SEILSCHUTZ	11238277	20	4	655	11 29 474 3	LAUFSTEG ZWISCHENSTUEC
SEILSCHUTZ	11238277	22	2	657	10 55 514 8	STURZSICHERUNG NRS
SEILSCHUTZ	11274800	6	1	608	79 05 205 14	UNTERFLASCHE
SEILSCHUTZ	11481159	6	1	601	79 04 112 14	UNTERFLASCHE
SEILSCHUTZ EZW KPL	992925914	12	1	361	10 51 968 6	EZW OW EINBAU KPL
SEILSCHUTZ EZW KPL	993353714	1	1	371	99 29 259 14	SEILSCHUTZ EZW KPL
SEILSCHUTZ KPL	11287255	12	1	549	11 24 570 3	AL ZWISCHENSTUECK KPL
SEILSCHUTZ KPL	11287255	12	2	567	11 24 570 9	AL ZWISCHENSTUECK KPL
SEILSCHUTZ KPL	11287255	12	4	574	11 24 571 5	AL ZWISCHENSTUECK KPL
SEILSCHUTZ SCHWK	993522914	20	1	590	99 23 398 14	ROLLENSATZ
SEILSCHUTZROHR	956809314	36	2	590	99 23 398 14	ROLLENSATZ
SEILSCHUTZROHR	956809514	21	1	590	99 23 398 14	ROLLENSATZ
SEILSCHUTZROHR	959841814	25	2	538	11 24 444 4	A-BOCK 1 KPL
SEILSCHUTZSTANGE	10576718	12	2	608	79 05 205 14	UNTERFLASCHE
SEILSCHUTZSTANGE	10814912	12	2	601	79 04 112 14	UNTERFLASCHE
SEILTROMMEL	10555973	2	1	365	10 55 156 3	WINDE
SEILTROMMEL	11231269	2	1	489	10 53 039 8	WINDE
SEILTROMMEL	540273314	1	1	626	54 02 702 14	SEILTROMMEL KPL
SEILTROMMEL	938850001	1	1	349	96 96 248 01	WINDE
SEILTROMMEL KPL	540270214	21	1	624	59 20 694 14	WINDE
SEILZUG	592286314	26	1	423	10 35 007 6	SCHIEBETUER
SEITENBLECH	11274624	2	2	601	79 04 112 14	UNTERFLASCHE
SEITENBLECH	11274798	2	2	608	79 05 205 14	UNTERFLASCHE
SEITENSCHEIBE LI	592288514	43	1	419	10 35 008 0	KABINE
SEITENSCHEIBE RE	592289114	49	1	419	10 35 008 0	KABINE
SEITENSCHEIBE RE	592289214	50	1	419	10 35 008 0	KABINE
SEITENTEIL	992938914	1	1	372	99 33 537 14	SEILSCHUTZ EZW KPL
SEITENTEIL	992939214	2	1	372	99 33 537 14	SEILSCHUTZ EZW KPL
SELBSTVERLADESYSTEM H	10519712	2	1	660	10 51 971 3	SELBSTVERLADESYSTEM NR
SELBSTVERLADESYSTEM H	10519738	2	1	666	11 23 619 7	SELBSTVERLADESYSTEM NR
SELBSTVERLADESYSTEM NR	10519713	642	1	3	01 38 376 14	LR 1300 SX
SELBSTVERLADESYSTEM NR	11236197	644	1	3	01 38 376 14	LR 1300 SX
SELBSTVERLADESYSTEM NR	11242988	647	1	4	01 38 376 14	LR 1300 SX
SELBSTVERLADESYSTEM NR	11895685	10	1	675	11 24 298 8	SELBSTVERLADESYSTEM NR
SELBSTVERLADESYSTEM NR	11895686	10	1	676	11 89 568 5	SELBSTVERLADESYSTEM NR
SELBSTVERLADESYSTEM NR	11895687	11	1	675	11 24 298 8	SELBSTVERLADESYSTEM NR
SELBSTVERLADESYSTEM NR	11895688	10	1	682	11 89 568 7	SELBSTVERLADESYSTEM NR
SENKBREMSVENTIL	10226750	2	2	661	10 51 971 2	SELBSTVERLADESYSTEM H
SENKBREMSVENTIL	11239880	2	1	671	51 16 404 14	SENKBREMSVENTIL
SENKBREMSVENTIL	11239880	2	1	673	59 21 584 14	SENKBREMSVENTIL
SENKBREMSVENTIL	11300790	160	1	685	59 21 826 14	ABSTUETZZYLINDER
SENKBREMSVENTIL	511640414	3	1	668	10 51 973 8	SELBSTVERLADESYSTEM H
SENKBREMSVENTIL	592158414	4	1	668	10 51 973 8	SELBSTVERLADESYSTEM H
SENKSCHRAUBE DIN 7991 M1	4001967	24	2	402	11 27 970 6	KABINE KPL
SENKSCHRAUBE DIN 7991 M1	4001967	31	24	681	11 89 568 6	SELBSTVERLADESYSTEM NR
SENKSCHRAUBE DIN 7991 M1	4600170	7	8	374	99 29 392 14	SEITENTEIL
SENKSCHRAUBE DIN 7991 M1	4600170	20	12	376	99 29 386 14	KONSOLE KPL
SENKSCHRAUBE DIN 7991 M1	4600170	20	12	377	99 29 434 14	KONSOLE KPL
SENKSCHRAUBE DIN 7991 M	407071114	4	4	440	11 30 962 5	HALTER KPL
SENKSCHRAUBE DIN 7991 M6	408606314	33	24	631	10 55 372 1	DACHGELAENDER NRS
SENKSCHRAUBE DIN 7991 M8	4600257	4	7	375	99 29 388 14	BUEGEL KPL

Bezeichnung	Artikel	Pos.	Menge	Blatt	Baugruppe	Bezeichnung
SENKSCHRAUBE DIN 7991 M8	4001205	3	7	375	99 29 388 14	BUEGEL KPL
SENKSCHRAUBE DIN 7991 M	4600157	11	16	376	99 29 386 14	KONSOLE KPL
SENKSCHRAUBE DIN 7991 M	4600157	11	16	377	99 29 434 14	KONSOLE KPL
SENKSCHRAUBE DIN 7991 M8	408606214	37	4	402	11 27 970 6	KABINE KPL
SENKSCHRAUBE DIN 7991 M8	408606214	5	2	700	10 57 848 6	MONITOR KABINE ANBAU
SENKSCHRAUBE DIN 7991 M8	4002551	6	4	373	99 29 389 14	SEITENTEIL
SENKSCHRAUBE DIN 7991 M8	4002551	6	4	374	99 29 392 14	SEITENTEIL
SENKSCHRAUBE DIN 7991 M8	408606414	90	14	335	11 24 483 7	BEF-TEILE OW
SENKSCHRAUBE DIN 7991 M8	408606414	60	1	653	11 30 567 0	TRANSPORTSICHERUNG
SENKSCHRAUBE DIN 7991 M	408601008	16	4	521	10 58 193 7	GITTERROST KPL
SENKSCHRAUBE DIN 7991 M	408601008	13	8	636	11 24 575 5	PODEST
SENKSCHRAUBE ISO 10642	10348867	15	4	650	11 29 473 7	LAUFSTEG ZWISCHENSTUEC
SENKSCHRAUBE ISO 10642	10348867	16	4	654	11 29 474 2	LAUFSTEG ZWISCHENSTUEC
SENKSCHRAUBE ISO 10642	10348867	18	4	655	11 29 474 3	LAUFSTEG ZWISCHENSTUEC
SENKSCHRAUBE ISO 10642	10348867	15	4	657	10 55 514 8	STURZSICHERUNG NRS
SENKSCHRAUBE ISO 10642	408600708	99	2	335	11 24 483 7	BEF-TEILE OW
SENKSCHRAUBE ISO 10642	408600708	6	8	418	11 22 369 1	FUSSPEDAL EL EINBAU
SENKSCHRAUBE ISO 10642	408600708	6	1	704	11 22 037 2	FUSSPEDAL EL EINBAU
SENKSCHRAUBE ISO 10642	10349756	93	6	335	11 24 483 7	BEF-TEILE OW
SENKSCHRAUBE ISO 10642	408600808	91	2	335	11 24 483 7	BEF-TEILE OW
SENKSCHRAUBE ISO 10642	11910892	42	6	315	11 24 409 0	VERKLEIDUNG OW EINBAU KP
SENKSCHRAUBE ISO 10642	4002655	92	10	335	11 24 483 7	BEF-TEILE OW
SENKSCHRAUBE ISO 14581	10342191	4	3	241	10 12 134 5	RS KURBELWELLENDICHTUN
SENKSCHRAUBE ISO 2009 M4	407041214	3	3	438	97 07 857 03	LIBELLE EINBAU
SENKSCHRAUBE ISO 2009 M	4001266	42	2	725	10 52 155 9	MODUL BETANKUNGSANLAG
SENKSCHRAUBE ISO 7047 M4	4002871	34	24	402	11 27 970 6	KABINE KPL
SENKSCHRAUBE ISO 7047 M6	4002401	5	4	437	11 26 095 6	STEUERKONSOLE RE KPL
SENSOR	10144038	7	1	217	11 24 114 5	ANLAGE HARNSTOFF EINBAU
SENSOR	11008787	9	2	217	11 24 114 5	ANLAGE HARNSTOFF EINBAU
SICHERHEITSELEMENT	11291030	3	1	209	11 24 679 0	LUFTFILTER
SICHERHEITSHEBEL KPL	693168514	41	1	408	10 51 907 9	STEUERSTAND LI
SICHERHEITSKLAPPSTECKER	10098106	12	2	442	99 18 041 14	VERZURRUNG OW
SICHERHEITSKLAPPSTECKER	10098106	45	2	640	99 10 116 14	SEILFUEHRUNG
SICHERHEITSKLAPPSTECKER	485565814	2	2	78	99 08 706 14	LEITER EINBAU
SICHERHEITSKLAPPSTECKER	485565814	12	1	554	11 28 397 7	AUFFANGWANNE KPL
SICHERHEITSKLAPPSTECKER	485565814	12	1	555	11 28 397 8	AUFFANGWANNE KPL
SICHERHEITSKLAPPSTECKER	485565814	19	2	559	11 94 087 8	MONTAGEEINHEIT
SICHERHEITSKLAPPSTECKER	485565814	24	2	584	10 59 863 3	PENDEL KPL
SICHERHEITSKLAPPSTECKER	485565814	43	2	640	99 10 116 14	SEILFUEHRUNG
SICHERHEITSKLAPPSTECKER	485565814	5	1	642	99 10 125 14	GABEL
SICHERHEITSKLAPPSTECKER	485565814	5	1	644	99 06 789 14	GABEL
SICHERHEITSKLAPPSTECKER	432016214	40	1	77	10 58 163 4	KABINENAUFHAENGUNG KPL
SICHERUNGSBLECH	11942341	21	2	535	11 27 536 5	RUECKFALLSTUETZEN EINBA
SICHERUNGSBLECH	959912714	17	6	341	99 29 803 14	VERZURRUNG BALLAST
SICHERUNGSEINSATZ	10224306	1	1	47	10 53 048 9	SICHERUNGSHALTER
SICHERUNGSEINSATZ	10224306	21	2	407	99 20 811 14	RESERVESICHERUNGEN
SICHERUNGSEINSATZ	10224307	11	3	47	10 53 048 9	SICHERUNGSHALTER
SICHERUNGSEINSATZ	10224307	22	2	407	99 20 811 14	RESERVESICHERUNGEN
SICHERUNGSFALLE	10350190	2	2	612	11 27 482 9	DOPPELHAKEN KPL
SICHERUNGSFALLE	10350196	2	1	606	11 48 116 2	EINFACHHAKEN
SICHERUNGSFEDER 3MM	11297461	3	1	693	11 23 623 3	TASCHENSCHLOSS
SICHERUNGSFEDER 4.5 MM	433105414	12	4	340	10 52 656 0	MONTAGETEILE
SICHERUNGSFEDER 4.5 MM	433105414	12	2	618	10 51 743 9	SEILEINZIEHWINDE KPL NRS
SICHERUNGSFEDER 4MM	433101208	12	1	562	11 23 290 7	AUFLAGE KPL
SICHERUNGSFEDER 4MM	433101208	53	2	581	11 28 629 9	MONTAGETEILE
SICHERUNGSFEDER 4MM	433101208	34	8	590	99 23 398 14	ROLLENSATZ
SICHERUNGSFEDER 4MM	433101208	41	2	593	99 48 521 14	SPITZEN AL KPL
SICHERUNGSFEDER 4MM	433101208	6	12	641	99 23 405 14	ZWISCHENABSPANNUNG NR
SICHERUNGSFEDER 4MM	433101208	6	12	643	99 23 420 14	ZWISCHENABSPANNUNG NR
SICHERUNGSFEDER 4MM	433101208	7	14	645	97 05 997 03	ZWISCHENABSPANNUNG NR

Bezeichnung	Artikel	Pos.	Menge	Blatt	Baugruppe	Bezeichnung
SICHERUNGSFEDER 4MM	433101208	22	4	647	10 55 601 0	STURZSICHERUNG NRS
SICHERUNGSFEDER 4MM	433101208	13	4	657	10 55 514 8	STURZSICHERUNG NRS
SICHERUNGSFEDER 4MM	433101208	20	4	687	11 89 568 8	SELBSTVERLADESYSTEM NR
SICHERUNGSFEDER 5MM	433102508	56	2	510	11 23 820 3	ANLENKSTUECK KPL
SICHERUNGSFEDER 5MM	433102508	18	2	559	11 94 087 8	MONTAGEEINHEIT
SICHERUNGSFEDER 5MM	433102508	20	2	593	99 48 521 14	SPITZEN AL KPL
SICHERUNGSFEDER 5MM	433102508	29	8	660	10 51 971 3	SELBSTVERLADESYSTEM NR
SICHERUNGSFEDER DIN 2194	433105008	19	6	341	99 29 803 14	VERZURRUNG BALLAST
SICHERUNGSFEDER DIN 2194	433105008	13	8	510	11 23 820 3	ANLENKSTUECK KPL
SICHERUNGSFEDER DIN 2194	433105008	15	2	522	99 30 060 14	HALTESTANGE KPL
SICHERUNGSFEDER DIN 2194	433105008	12	2	550	11 28 726 4	BOLZEN KPL
SICHERUNGSFEDER DIN 2194	433105008	15	2	560	99 24 404 14	HALTESTANGE KPL
SICHERUNGSFEDER DIN 2194	433105008	13	1	561	11 93 703 7	HALTESTANGE KPL
SICHERUNGSFEDER DIN 2194	433105008	15	2	569	99 24 405 14	HALTESTANGE KPL
SICHERUNGSFEDER DIN 2194	433105008	13	1	570	11 93 702 0	HALTESTANGE KPL
SICHERUNGSFEDER DIN 2194	433105008	15	2	576	99 24 406 14	HALTESTANGE KPL
SICHERUNGSFEDER DIN 2194	433105008	54	2	581	11 28 629 9	MONTAGETEILE
SICHERUNGSFEDER DIN 2194	433105008	15	2	588	99 24 594 14	HALTESTANGE KPL
SICHERUNGSFEDER DIN 2194	433105008	21	3	593	99 48 521 14	SPITZEN AL KPL
SICHERUNGSFEDER DIN 2194	433105008	44	2	640	99 10 116 14	SEILFUEHRUNG
SICHERUNGSFEDER DIN 2194	433105008	11	1	666	11 23 619 7	SELBSTVERLADESYSTEM NR
SICHERUNGSHALTER	10530489	34	1	45	11 24 519 0	OW EL
SICHERUNGSKETTE	592291614	2	1	429	59 22 914 14	PODESTSICHERUNG KPL
SICHERUNGSMUTTER DIN 98	11219056	6	2	214	10 55 091 1	KRAFTSTOFFVORFILTER AN
SICHERUNGSPRUEFER	10227556	2	1	407	99 20 811 14	RESERVESICHERUNGEN
SICHERUNGSRING	10216718	7	1	391	11 94 017 7	TRIEBWELLE
SICHERUNGSRING	10573893	3	2	602	10 50 435 2	SEILROLLE
SICHERUNGSRING	10598700	9	1	451	51 24 059 14	V.MOTOR
SICHERUNGSRING	11214714	7	1	452	10 50 351 3	TRIEBWERK
SICHERUNGSRING 10	10447016	7	6	541	99 14 137 14	UMLENKROLLE KPL
SICHERUNGSRING 10	10447016	23	12	618	10 51 743 9	SEILEINZIEHWINDE KPL NRS
SICHERUNGSRING 4	10507964	56	12	51	10 56 645 8	KLEMMKASTEN
SICHERUNGSRING 8	10447017	10	4	415	91 65 251 14	KABELDURCHFUEHRUNG KAB
SICHERUNGSRING 8	10447017	38	2	593	99 48 521 14	SPITZEN AL KPL
SICHERUNGSRING 8	10447017	20	10	618	10 51 743 9	SEILEINZIEHWINDE KPL NRS
SICHERUNGSRING 8 A2	10558857	45	2	510	11 23 820 3	ANLENKSTUECK KPL
SICHERUNGSRING 8 A2	10558857	12	2	551	11 28 725 5	SEILSCHUTZ KPL
SICHERUNGSRING AEHNL.DI	10220937	25	1	168	11 22 127 4	PUMPENELEMENT
SICHERUNGSRING DIN 471	10171594	29	3	471	96 93 178 01	FAHRANTRIEB
SICHERUNGSRING DIN 471	10424724	2	1	392	10 65 027 0	VERSCHLUSSRING
SICHERUNGSRING DIN 471 1	428011901	19	5	471	96 93 178 01	FAHRANTRIEB
SICHERUNGSRING DIN 471 1	4280008	31	4	117	10 11 835 0	ANSCHLUSSGEHAEUSE
SICHERUNGSRING DIN 471 14	11293196	8	1	457	10 44 510 2	SCHNELLVERSCHLUSSKUPPL
SICHERUNGSRING DIN 471 1	428001014	45	1	627	54 02 703 14	FLANSCH KPL
SICHERUNGSRING DIN 471 2	428001414	6	1	540	91 90 584 14	WINKELANZEIGE
SICHERUNGSRING DIN 471 2	4280020	3	3	519	61 61 541 14	KABELTROMMEL
SICHERUNGSRING DIN 471 2		43	3	352	93 88 497 01	PLANETENGETRIEBE
SICHERUNGSRING DIN 471 2	4630001	56	3	396	90 01 376 2	DREHWERKANTRIEB
SICHERUNGSRING DIN 471 3	428011301	7	2	246	11 44 800 5	KIPPHEBELBOCK VORM.
SICHERUNGSRING DIN 471 3	428002914	13	1	629	54 02 705 14	ANTRIEB KPL
SICHERUNGSRING DIN 471 4		33	3	352	93 88 497 01	PLANETENGETRIEBE
SICHERUNGSRING DIN 471 4	428003314	41	3	396	90 01 376 2	DREHWERKANTRIEB
SICHERUNGSRING DIN 471 45	10171583	49	3	471	96 93 178 01	FAHRANTRIEB
SICHERUNGSRING DIN 471 45	4280032	41	2	148	10 13 802 7	RS WELLE
SICHERUNGSRING DIN 471 4	4000870	21	5	396	90 01 376 2	DREHWERKANTRIEB
SICHERUNGSRING DIN 471 5	10171585	72	1	396	90 01 376 2	DREHWERKANTRIEB
SICHERUNGSRING DIN 471 5	4280034	41	1	135	98 84 402	RS WELLE
SICHERUNGSRING DIN 471 5	428004514	30	1	628	54 02 704 14	ABTRIEB KPL
SICHERUNGSRING DIN 471 5		8	5	352	93 88 497 01	PLANETENGETRIEBE
SICHERUNGSRING DIN 471 5	400093303	39	3	471	96 93 178 01	FAHRANTRIEB

Bezeichnung	Artikel	Pos.	Menge	Blatt	Baugruppe	Bezeichnung
SICHERUNGSRING DIN 471 A	10530197	360	8	98	11 24 682 0	VERTEILERGETRIEBE
SICHERUNGSRING DIN 471 A	485529714	370	2	98	11 24 682 0	VERTEILERGETRIEBE
SICHERUNGSRING DIN 472 10	428104201	7	1	474	94 44 065 03	PLANETENRAD
SICHERUNGSRING DIN 472 11	10171636	73	1	471	96 93 178 01	FAHRANTRIEB
SICHERUNGSRING DIN 472 13	10171639	7	1	473	94 44 048 03	PLANETENRAD
SICHERUNGSRING DIN 472 2	428107714	21	1	629	54 02 705 14	ANTRIEB KPL
SICHERUNGSRING DIN 472 3	428100914	46	1	627	54 02 703 14	FLANSCH KPL
SICHERUNGSRING DIN 472 46	428107101	76	1	471	96 93 178 01	FAHRANTRIEB
SICHERUNGSRING DIN 472 6	4281037	14	1	629	54 02 705 14	ANTRIEB KPL
SICHERUNGSRING DIN 472 8	4281013	4	1	627	54 02 703 14	FLANSCH KPL
SICHERUNGSRING DIN 472 8		4	1	352	93 88 497 01	PLANETENGETRIEBE
SICHERUNGSRING DIN 472 9	10171632	67	1	396	90 01 376 2	DREHWERKANTRIEB
SICHERUNGSRING DIN 472 9	10171632	7	1	472	94 44 043 03	PLANETENRAD
SICHERUNGSRING DIN 472 9	4281016	31	1	628	54 02 704 14	ABTRIEB KPL
SICHERUNGSRING DIN 472 9	4281017	40	1	148	10 13 802 7	RS WELLE
SICHERUNGSRING DIN 472 9	4281017	40	1	156	10 13 803 2	RS VERSCHLUSSRING
SICHERUNGSRING DIN 472 J5	11268816	380	2	98	11 24 682 0	VERTEILERGETRIEBE
SICHERUNGSRING DIN 984 3	10008092	25	1	177	11 21 593 6	PUMPENELEMENT
SICHERUNGSSCHEIBE 10.5/16		53	12	352	93 88 497 01	PLANETENGETRIEBE
SICHERUNGSSCHEIBE 10.5/16	4229913	27	2	357	96 96 543 01	WINDENRAHMEN
SICHERUNGSSCHEIBE 10.5/16	4229913	75	12	396	90 01 376 2	DREHWERKANTRIEB
SICHERUNGSSCHEIBE 12X13	4900093	52	4	357	96 96 543 01	WINDENRAHMEN
SICHERUNGSSCHEIBE 12X13	4900093	27	8	396	90 01 376 2	DREHWERKANTRIEB
SICHERUNGSSCHEIBE 16X17X	423911601	32	10	350	93 88 500 01	SEILTROMMEL
SICHERUNGSSCHEIBE 16X17X	423911601	8	8	357	96 96 543 01	WINDENRAHMEN
SICHERUNGSSCHEIBE 17X24X	4239009	24	8	115	10 11 834 9	DOPPELV.PUMPE
SICHERUNGSSCHEIBE 20X21X	423912001	69	12	471	96 93 178 01	FAHRANTRIEB
SIEB	11239595	3	1	219	11 24 240 8	HARNSTOFFBEHAELTER
SIEBFILTER	11368896	6	1	220	10 14 653 8	ENTNAHMEMODUL
SIGNALLEUCHTE	10524927	100	1	404	11 27 973 6	KABINE EL
SIGNALLEUCHTE	10524927	37	2	539	10 53 120 7	A-BOCK EL
SITZ	11226118	130	1	387	51 14 347 14	DW SICHERUNGSBLOCK
SITZRAHMEN	7024996	15	1	434	10 22 506 8	FAHRERSITZ
SITZTEIL KPL	7024981	12	1	434	10 22 506 8	FAHRERSITZ
SITZWANNE	10165637	65	1	434	10 22 506 8	FAHRERSITZ
SOCKELGEHAEUSE	605604914	93	1	46	11 24 519 0	OW EL
SOCKELGEHAEUSE	693157114	61	1	516	11 90 151 1	KABELSATZ 1 ANLENKSTUECK
SOCKELGEHAEUSE	693157114	50	1	595	97 14 959 03	SPITZENENDSCHALTER EL
SOCKELGEHAEUSE	693157214	71	1	517	11 90 151 1	KABELSATZ 1 ANLENKSTUECK
SOFTWARE	10524422	401	1	3	01 38 376 14	LR 1300 SX
SONDERVERSCHRAUBUNG	10446305	28	1	94	11 24 773 5	AGGREGAT HYDR
SONDERVERSCHRAUBUNG	289031614	13	1	486	11 26 260 6	WINDE 1 HYDR
SONDERVERSCHRAUBUNG	289031614	13	1	501	11 26 261 1	WINDE 2 HYDR
SONNENBLENDE	592290714	6	1	428	59 22 905 14	SPIEGEL + SONNENBLENDE
SONNENRAD		25	1	352	93 88 497 01	PLANETENGETRIEBE
SONNENRAD		35	1	352	93 88 497 01	PLANETENGETRIEBE
SONNENRAD		45	1	352	93 88 497 01	PLANETENGETRIEBE
SONNENRAD	540270714	13	1	625	54 02 701 14	PLANETENSTUFE
SONNENRAD	540270914	23	1	625	54 02 701 14	PLANETENSTUFE
SONNENRAD	927562901	30	1	396	90 01 376 2	DREHWERKANTRIEB
SONNENRAD	927597301	45	1	396	90 01 376 2	DREHWERKANTRIEB
SONNENRAD	927651701	60	1	396	90 01 376 2	DREHWERKANTRIEB
SONNENRAD	944378403	40	1	471	96 93 178 01	FAHRANTRIEB
SONNENRAD	944404503	20	1	471	96 93 178 01	FAHRANTRIEB
SONNENRAD	944405203	30	1	471	96 93 178 01	FAHRANTRIEB
SONNENROLLO	592291214	102	1	420	10 35 008 0	KABINE
SPANNER HYDR KPL	10557163	2	1	468	10 55 716 1	LEITRADEINHEIT KPL
SPANNSCHELLE	10122841	2	1	286	10 14 274 2	KUEHLMITTELKRUEMMER AN
SPANNSCHELLE	10124798	5	2	276	10 14 967 6	VERBINDUNGSLEITUNG ANBA
SPANNSCHELLE	10127984	30	9	202	11 24 114 1	KUEHLER EINBAU LADELUFT

Bezeichnung	Artikel	Pos.	Menge	Blatt	Baugruppe	Bezeichnung
SPANNSCHELLE	10127984	2	1	275	10 14 736 4	LUFTANSAUGUNG ANBAU
SPANNSCHELLE	10132073	10	4	290	10 14 144 3	ABGASROHR VORM.
SPANNSCHELLE	10138820	3	1	284	10 14 821 5	THERMOSTATGEHAEUSE AN
SPANNSCHELLE	10138820	4	1	293	10 14 511 2	ABGASSTUTZEN ANBAU
SPANNSCHLOSS		10	-1	701	10 51 728 0	KABINENNEIGUNG NRS
SPANNSCHLOSS	790306414	64	1	77	10 58 163 4	KABINENAUFHAENGUNG KPL
SPANNSTIFT DIN 1481 5X16 S	11226135	170	1	387	51 14 347 14	DW SICHERUNGSBLOCK
SPANNSTIFT ISO 13337 8X10 S	4980638	44	2	151	10 12 224 5	RS HEBEL
SPANNSTIFT ISO 8752 2X6 ST	11001743	6	1	264	10 13 508 0	DRUCKROHRSTUTZEN
SPANNSTIFT ISO 8752 5X12 S		59	2	352	93 88 497 01	PLANETENGETRIEBE
SPANNSTIFT ISO 8752 5X16	432003714	97	2	511	11 23 820 3	ANLENKSTUECK KPL
SPANNSTIFT ISO 8752 8X16 S		72	1	352	93 88 497 01	PLANETENGETRIEBE
SPANNSTIFT ISO 8752 8X16 S	432008001	78	1	471	96 93 178 01	FAHRANTRIEB
SPANNUNGSWANDLER	693183914	91	1	406	10 55 963 5	SCHALTSCHR X1
SPANNVORRICHTUNG	10153373	5	1	280	10 14 286 0	KLIMAKOMPRESSOR ANBAU
SPERRVENTIL	11226088	100	2	387	51 14 347 14	DW SICHERUNGSBLOCK
SPIEGEL	592290814	8	1	428	59 22 905 14	SPIEGEL + SONNENBLENDE
SPIEGEL + SONNENBLENDE	592290514	85	1	420	10 35 008 0	KABINE
SPIRALBACKRING	540273214	20	1	629	54 02 705 14	ANTRIEB KPL
SPIRALFEDER TUERBAND	10509153	32	4	631	10 55 372 1	DACHGELAENDER NRS
SPIRALSPANNSTIFT DIN 7344	11306379	6	1	693	11 23 623 3	TASCHENSCHLOSS
SPITZE	10574725	11	1	637	11 27 109 7	FANGSTANGE NRS
SPITZEN AL KPL	994852114	115	1	3	01 38 376 14	LR 1300 SX
SPITZEN AL SCHWK	994852014	1	1	593	99 48 521 14	SPITZEN AL KPL
SPITZEN AL UMBAU	918907114	116	1	3	01 38 376 14	LR 1300 SX
SPITZENENDSCHALTER EINBA	993080014	15	2	590	99 23 398 14	ROLLENSATZ
SPITZENENDSCHALTER EL	971495903	29	1	593	99 48 521 14	SPITZEN AL KPL
SPLINT ISO 1234 10X63 A4	433014214	21	2	538	11 24 444 4	A-BOCK 1 KPL
SPLINT ISO 1234 10X80 A4	433010314	20	2	83	10 51 969 4	A-BOCK AUFRICHTZYL EINBA
SPLINT ISO 1234 10X80 A4	433010314	14	1	561	11 93 703 7	HALTESTANGE KPL
SPLINT ISO 1234 10X80 A4	433010314	14	1	570	11 93 702 0	HALTESTANGE KPL
SPLINT ISO 1234 10X80 A4	433010314	50	2	581	11 28 629 9	MONTAGETEILE
SPLINT ISO 1234 10X80 A4	433010314	32	4	593	99 48 521 14	SPITZEN AL KPL
SPLINT ISO 1234 10X80 A4	433010314	25	4	660	10 51 971 3	SELBSTVERLADESYSTEM NR
SPLINT ISO 1234 10X80 A4	433010314	21	1	666	11 23 619 7	SELBSTVERLADESYSTEM NR
SPLINT ISO 1234 13X112 A4	433011114	21	2	660	10 51 971 3	SELBSTVERLADESYSTEM NR
SPLINT ISO 1234 5X32	433006314	4	2	475	10 50 179 5	AUFSTIEG KPL
SPLINT ISO 1234 5X32	433006314	7	2	585	11 28 357 6	MONTAGETEILE
SPLINT ISO 1234 5X45	433006614	4	4	82	99 23 451 14	ANLENKBOLZEN EINBAU
SPLINT ISO 1234 5X50	433006714	12	8	343	10 51 969 7	NADELEINZIEHWINDE
SPLINT ISO 1234 6.3X32 ST	433007508	31	4	77	10 58 163 4	KABINENAUFHAENGUNG KPL
SPLINT ISO 1234 6.3X45	433007708	25	4	77	10 58 163 4	KABINENAUFHAENGUNG KPL
SPLINT ISO 1234 6.3X63	433008108	26	4	538	11 24 444 4	A-BOCK 1 KPL
SPLINT ISO 1234 6.3X63	433008108	33	2	590	99 23 398 14	ROLLENSATZ
SPLINT ISO 1234 6.3X71 A4	433008214	16	4	83	10 51 969 4	A-BOCK AUFRICHTZYL EINBA
SPLINT ISO 1234 8X100 A4	433009514	14	2	522	99 30 060 14	HALTESTANGE KPL
SPLINT ISO 1234 8X100 A4	433009514	15	8	542	99 26 417 14	HALTESTANGE KPL
SPLINT ISO 1234 8X100 A4	433009514	14	2	560	99 24 404 14	HALTESTANGE KPL
SPLINT ISO 1234 8X100 A4	433009514	14	2	569	99 24 405 14	HALTESTANGE KPL
SPLINT ISO 1234 8X100 A4	433009514	14	6	576	99 24 406 14	HALTESTANGE KPL
SPLINT ISO 1234 8X100 A4	433009514	14	6	588	99 24 594 14	HALTESTANGE KPL
SPLINT ISO 1234 8X50 A4	433008814	48	2	581	11 28 629 9	MONTAGETEILE
SPLINT ISO 1234 8X56 A4	433009014	31	4	188	11 24 113 8	MOTORLAGER KPL
SPLINT ISO 1234 8X56 A4	433009014	30	2	640	99 10 116 14	SEILFUEHRUNG
SPLINT ISO 1234 8X63 A4	433009114	15	2	77	10 58 163 4	KABINENAUFHAENGUNG KPL
SPLINT ISO 1234 8X63 A4	433009114	49	2	581	11 28 629 9	MONTAGETEILE
SPLINT ISO 1234 8X63 A4	433009114	19	2	593	99 48 521 14	SPITZEN AL KPL
SPLINT ISO 1234 8X80	433009408	14	2	594	11 24 825 8	SEILFUEHRUNG SCHWK NRS
SPLINT ISO 1234 8X90	433009714	33	4	660	10 51 971 3	SELBSTVERLADESYSTEM NR
SPRENGRING 5 X 135	10352383	180	2	686	59 21 826 14	ABSTUETZZYLINDER

Bezeichnung	Artikel	Pos.	Menge	Blatt	Baugruppe	Bezeichnung
SPRENGRING 52X2 FST	4980482	7	2	243	10 14 636 7	KOLBEN KPL.
SPRENGRING 5X175	10352382	175	1	685	59 21 826 14	ABSTUETZZYLINDER
SPRENGRING 6 X 172	10352384	185	1	686	59 21 826 14	ABSTUETZZYLINDER
SPRENGRING AV45X1.75		62	1	352	93 88 497 01	PLANETENGETRIEBE
STAHLDICHTRING	7023847	905	14	388	51 22 991 14	OELMOTOR
STAHLDICHTRING	7024277	115	14	621	51 02 322 14	OELMOTOR
STAHLDRAHTSEIL	773400308	73	0.25	46	11 24 519 0	OW EL
STAHLDRAHTSEIL	773400308	25	0.9	584	10 59 863 3	PENDEL KPL
STAHLDRAHTSEIL	773400308	12	0.62	597	11 25 204 2	AUFLAGE KPL
STAHLDRAHTSEIL	773400314	22	2	640	99 10 116 14	SEILFUEHRUNG
STAHLKUGEL	11226127	140	1	387	51 14 347 14	DW SICHERUNGSBLOCK
STANGE	919421714	8	2	641	99 23 405 14	ZWISCHENABSPANNUNG NR
STANGE KPL	11273458	212	2	404	11 27 973 6	KABINE EL
STANGENAUGE	11918996	90	1	86	59 21 041 14	DOPPELWIRKZYL
STANGENDICHTSATZ	11267400	10	2	106	11 21 993 0	PUMPENGEHAEUSE
STANGENFUEHRUNGSRING	513319814	17	1	460	51 33 141 14	DOPPELWIRKZYL
STARTER	11386645	1	1	296	10 12 037 2	STARTER ANBAU
STARTER ANBAU	10120372	450	1	224	12 42 545 4	DIESELMOTOR
STAUBKAPPE	605013508	53	1	516	11 90 151 1	KABELSATZ 1 ANLENKSTUECK
STAUBKAPPE	605013508	51	2	539	10 53 120 7	A-BOCK EL
STAUBMUFFE	7615441	1	1	41	51 05 719 14	SCHNELLVERSCHRAUBUNG
STECKDOSE	10520078	131	1	46	11 24 519 0	OW EL
STECKDOSE	6205239	13	1	184	11 24 448 7	ZENTRALAGGREGAT EL
STECKER	10447747	2	4	459	10 55 154 8	SCHNELLVERSCHLUSSKUPPL
STECKER	10447747	2	6	514	10 55 157 6	SCHNELLVERSCHLUSSKUPPL
STECKER	11247913	1	4	461	10 55 119 1	DECKEL KPL
STECKER	605013408	52	1	516	11 90 151 1	KABELSATZ 1 ANLENKSTUECK
STECKER	605253314	201	11	406	10 55 963 5	SCHALTSCHR X1
STECKER	605253414	211	1	406	10 55 963 5	SCHALTSCHR X1
STECKER	605254114	213	1	406	10 55 963 5	SCHALTSCHR X1
STECKER	605254214	203	11	406	10 55 963 5	SCHALTSCHR X1
STECKER	605264814	51	3	403	11 27 973 6	KABINE EL
STECKER	693013014	11	1	722	10 52 957 6	BETANKUNGSPUMPE KPL
STECKER	950490414	11	1	554	11 28 397 7	AUFFANGWANNE KPL
STECKER	950490414	11	1	555	11 28 397 8	AUFFANGWANNE KPL
STECKER	971230303	60	10	633	10 55 372 1	DACHGELAENDER NRS
STECKER	993352014	53	8	633	10 55 372 1	DACHGELAENDER NRS
STECKHUELSE	602209314	80	42	51	10 56 645 8	KLEMMKASTEN
STECKHUELSE	602303214	73	1	51	10 56 645 8	KLEMMKASTEN
STECKHUELSENGEHAEUSE	602209714	93	1	406	10 55 963 5	SCHALTSCHR X1
STECKKARTE PLATINE 1	917585714	51	1	406	10 55 963 5	SCHALTSCHR X1
STECKKUPPLUNG	10678754	23	2	217	11 24 114 5	ANLAGE HARNSTOFF EINBAU
STECKKUPPLUNG	11082454	22	2	217	11 24 114 5	ANLAGE HARNSTOFF EINBAU
STECKKUPPLUNG	11482007	25	4	217	11 24 114 5	ANLAGE HARNSTOFF EINBAU
STECKNUSS 36 X 1 "	885380314	55	1	504	10 56 187 5	WERKZEUGAUSRUESTUNG
STECKROHR	10125386	6	1	234	10 14 844 4	OELWANNE MIT BEFEST.
STELLKOLBEN	11219925	1	1	101	11 21 990 5	VERSTELLUNG
STELLSCHRAUBE M10X101 31	9076176	13	1	157	10 12 226 2	RS VERSTELLUNG
STEUERBLOCK	511640614	1	1	181	51 16 377 14	VENTILBLOCKSPEISEDRUCK
STEUERDECKEL	511640814	3	1	181	51 16 377 14	VENTILBLOCKSPEISEDRUCK
STEUERGERAET	10144039	5	1	217	11 24 114 5	ANLAGE HARNSTOFF EINBAU
STEUERGERAET	11219917	5	1	99	10 53 430 7	V.PUMPE
STEUERGERAET ANBAU	10146795	571	1	225	12 42 545 4	DIESELMOTOR
STEUERKOLBEN	11600281	3	1	109	11 06 730 4	ABSCHALTVENTIL
STEUERKONSOLE LI KPL	10223224	16	1	402	11 27 970 6	KABINE KPL
STEUERKONSOLE RE KPL	11260956	17	1	402	11 27 970 6	KABINE KPL
STEUERLEITUNG	600385314	31	10.5	516	11 90 151 1	KABELSATZ 1 ANLENKSTUECK
STEUERLEITUNG	600454314	53	6.5	403	11 27 973 6	KABINE EL
STEUERLEITUNG	600454314	35	4	595	97 14 959 03	SPITZENENDSCHALTER EL
STEUERLEITUNG	693030914	97	2	404	11 27 973 6	KABINE EL

Bezeichnung	Artikel	Pos.	Menge	Blatt	Baugruppe	Bezeichnung
STEUERLEITUNG	693106214	51	1.5	516	11 90 151 1	KABELSATZ 1 ANLENKSTUECK
STEUERPLATTE	7023839	2	1	390	11 94 017 6	TRIEBWERK HYDRAULIKTEIL
STEUERPLATTE LINKS	9887035	2	1	131	98 89 833	RS ZYLINDER+STEUERPLATT
STEUERPULT	11236557	10	1	615	11 25 016 2	NOTBETRIEB EL NRS
STEUERPULT	11236937	10	1	52	11 23 908 2	STEUERPULT
STEUERPULT	11239082	111	1	46	11 24 519 0	OW EL
STEUERRECHNER	10223180	31	1	406	10 55 963 5	SCHALTSCHR X1
STEUERSTAND LI	10519079	10	1	403	11 27 973 6	KABINE EL
STEUERSTAND RE	11260957	20	1	403	11 27 973 6	KABINE EL
STEUERUNGSTEIL	9079870	110	6	223	12 42 545 4	DIESELMOTOR
STEUERVENTIL	10114975	2	1	176	11 21 591 3	PUMPENELEMENT
STEUERVENTIL	10351603	2	1	167	11 22 126 8	PUMPENELEMENT
STEUERVENTIL	10409413	1	1	171	10 35 160 3	STEUERVENTIL
STEUERVENTIL	11215942	1	1	180	10 11 497 5	STEUERVENTIL
STIFT	10115230	11	1	455	11 22 473 8	VERSTELLUNG
STIFT	9888133	19	1	126	10 13 975 2	RS SCHWENKJOCH
STIFTEINSATZ	605604714	33	1	516	11 90 151 1	KABELSATZ 1 ANLENKSTUECK
STIFTEINSATZ	605604714	31	1	595	97 14 959 03	SPITZENENDSCHALTER EL
STIFTEINSATZ	605611814	43	1	516	11 90 151 1	KABELSATZ 1 ANLENKSTUECK
STIFTKONTAKT	605615814	36	5	516	11 90 151 1	KABELSATZ 1 ANLENKSTUECK
STIFTKONTAKT	605619814	34	14	516	11 90 151 1	KABELSATZ 1 ANLENKSTUECK
STIFTKONTAKT	6905271	13	2	722	10 52 957 6	BETANKUNGSPUMPE KPL
STIFTSCHRAUBE DIN 835 M10	10489376	3	3	275	10 14 736 4	LUFTANSAUGUNG ANBAU
STIFTSCHRAUBE DIN 835 M10	4901450	4	3	296	10 12 037 2	STARTER ANBAU
STIFTSCHRAUBE DIN 835 M8	4038502	13	3	235	10 15 529 8	OELWANNE VORM.
STIFTSCHRAUBE DIN 939 M10	4068017	60	6	65	10 56 073 3	KRAFTSTOFFTANK KPL
STIFTSCHRAUBE DIN 939 M1	11934656	125	4	30	11 28 647 6	VENTILBLOCK
STIFTSCHRAUBE DIN 939 M8	11690424	10	1	293	10 14 511 2	ABGASSTUTZEN ANBAU
STIFTSCHRAUBE M16X1.5	9275003	20	8	119	10 11 835 7	RS ANSCHLUSSGEHAEUSE
STIRNRAD	11294362	100	1	98	11 24 682 0	VERTEILERGETRIEBE
STIRNRAD	11294363	110	4	98	11 24 682 0	VERTEILERGETRIEBE
STOPFEN	10123528	3	1	153	10 14 131 6	ANSCHLUSSPLATTE VORM.
STOSSDAEMPFER	10289994	55	1	436	10 28 999 3	SCHWINGSYSTEM
STREBE	938858701	10	2	357	96 96 543 01	WINDENRAHMEN
STUETZBLECH	9073189	13	1	14	11 41 475 7	ANBAUTEILE LUFTPRESSER
STUETZBLECH	9073190	11	1	14	11 41 475 7	ANBAUTEILE LUFTPRESSER
STUETZFLANSCH		50	1	352	93 88 497 01	PLANETENGETRIEBE
STUETZFLANSCH	939556201	15	1	350	93 88 500 01	SEILTROMMEL
STUETZRING	10352368	140	1	685	59 21 826 14	ABSTUETZZYLINDER
STUETZRING	11910328	111	1	529	10 09 917 3	DOPPELWIRKZYL
STUETZRING	11918997	181	2	86	59 21 041 14	DOPPELWIRKZYL
STUETZRING	511710314	13	1	41	51 05 719 14	SCHNELLVERSCHRAUBUNG
STUETZRING GESCHL.	11007749	14	1	143	10 12 321 4	DS DRUCKREDUZIERVENTIL
STUETZRING GESCHL.	11007751	13	1	143	10 12 321 4	DS DRUCKREDUZIERVENTIL
STUETZRING GESCHL.	7382212	23	1	160	10 12 226 5	DS REGELVENTIL
STUETZSCHEIBE	10324886	11	1	170	10 32 489 2	TRIEBWERK
STUETZSCHEIBE 45X56X0.3	10123256	10	2	149	98 85 937	SCHEIBENSATZ
STUETZSCHEIBE 45X56X0.4	10123257	11	2	149	98 85 937	SCHEIBENSATZ
STUETZSCHEIBE 45X56X0.5	10123258	12	2	149	98 85 937	SCHEIBENSATZ
STUETZSCHEIBE DIN 988 S28X		47	3	352	93 88 497 01	PLANETENGETRIEBE
STUETZSCHEIBE S32X44X0.5	7380815	21	4	119	10 11 835 7	RS ANSCHLUSSGEHAEUSE
STUETZSCHEIBE S32X44X0.5	7380815	21	4	120	92 74 731	DS ANSCHLUSSGEHAEUSE
STUETZSCHEIBE S32X44X1.3	7380586	22	2	119	10 11 835 7	RS ANSCHLUSSGEHAEUSE
STUETZSCHEIBE S32X44X1.3	7380586	20	2	120	92 74 731	DS ANSCHLUSSGEHAEUSE
STUETZSCHEIBE S32X44X2 FS	7380291	19	2	119	10 11 835 7	RS ANSCHLUSSGEHAEUSE
STUETZSCHEIBE S32X44X2 FS	7380291	19	2	120	92 74 731	DS ANSCHLUSSGEHAEUSE
STURZSICHERUNG NRS	10555148	625	1	3	01 38 376 14	LR 1300 SX
STURZSICHERUNG NRS	10556010	620	1	3	01 38 376 14	LR 1300 SX
STURZSICHERUNG NRS	10557224	626	1	3	01 38 376 14	LR 1300 SX
STUTZEN	10334218	11	1	294	10 14 622 4	LADEDRUCKREGELUNG

Bezeichnung	Artikel	Pos.	Menge	Blatt	Baugruppe	Bezeichnung
STUTZEN	9273271	2	2	257	10 14 294 2	SCHMIEROELFILTER ANBAU
STUTZEN	956385814	45	2	217	11 24 114 5	ANLAGE HARNSTOFF EINBAU
T-NUTENSTEIN M10X12	890035314	59	21	315	11 24 409 0	VERKLEIDUNG OW EINBAU KP
T-STUECK	553087814	37	1	217	11 24 114 5	ANLAGE HARNSTOFF EINBAU
TAKTVENTIL	10149191	1	1	294	10 14 622 4	LADEDRUCKREGELUNG
TANK HYDR EINBAU	10560700	15	1	18	11 24 047 9	OW KPL
TANK HYDR KPL	10560701	3	1	58	10 56 070 0	TANK HYDR EINBAU
TANK HYDR SCHWK	10560703	3	1	60	10 56 070 1	TANK HYDR KPL
TANKHALTERUNG	11314166	2	1	430	11 94 091 0	KLIMAGERAET NRS
TANKVERSCHLUSS	11101351	5	1	219	11 24 240 8	HARNSTOFFBEHAELTER
TANKVERSCHLUSS	7365412	11	1	65	10 56 073 3	KRAFTSTOFFTANK KPL
TANKVERSCHLUSS	7401726	5	1	398	92 76 934 01	OELEINFUELLSTUTZEN
TASCHENSCHLOSS	11236233	11	1	692	11 23 626 6	SEILHALTERUNG NRS
TASCHENSCHLOSS	773941308	11	1	358	99 23 387 14	BESEILUNG EZW NADEL AL
TASTATUR	10531718	12	1	408	10 51 907 9	STEUERSTAND LI
TASTATUR BEDIENPULT X11	10036107	11	1	408	10 51 907 9	STEUERSTAND LI
TELESKOP	11909669	2	1	86	59 21 041 14	DOPPELWIRKZYL
TELLER	10098157	60	11	315	11 24 409 0	VERKLEIDUNG OW EINBAU KP
TELLER	10098157	18	20	329	10 54 591 0	MOTORABDECKUNG
TELLER	10098157	12	28	483	99 26 718 14	PODEST
TELLER	10098157	42	53	510	11 23 820 3	ANLENKSTUECK KPL
TELLER	10098157	20	6	521	10 58 193 7	GITTERROST KPL
TELLER	10098157	21	3	552	11 28 390 8	AL BEGEHUNG
TELLER	10098157	12	2	553	11 28 391 3	BEFESTIGUNGSCHELLE
TELLER	10098157	21	3	568	11 28 583 8	AL BEGEHUNG
TELLER	10098157	21	3	575	11 28 626 1	AL BEGEHUNG
TELLER	10098157	21	4	581	11 28 629 9	MONTAGETEILE
TELLER	10098157	10	12	635	11 24 147 8	UW PODEST
TELLER	10098157	10	28	636	11 24 575 5	PODEST
TELLER	10098157	13	4	649	10 55 280 7	GITTERROST KPL
TELLER	10098157	15	3	651	11 30 694 4	SCHIENE KPL
TELLER	10098157	5	2	652	11 23 827 7	SEILSCHUTZ
TELLER	10098157	12	1	653	11 30 567 0	TRANSPORTSICHERUNG
TELLER	10098157	11	18	657	10 55 514 8	STURZSICHERUNG NRS
TELLERFEDER	7024282	117	4	621	51 02 322 14	OELMOTOR
TEMPERATURFUEHLER	10424276	85	1	404	11 27 973 6	KABINE EL
TEMPERATURFUEHLER	10493626	50	1	45	11 24 519 0	OW EL
TEMPERATURFUEHLER	10493626	1	2	306	10 14 297 7	MOTORREGELUNGSENSORIK
TEMPERATURFUEHLER	11241756	40	1	45	11 24 519 0	OW EL
TEMPERATURFUEHLER KPL.	10152036	2	1	306	10 14 297 7	MOTORREGELUNGSENSORIK
TEMPERATURREGLER	511657614	13	1	20	11 29 618 6	OW HYDR
TEMPERATURSCHALTER	10513459	17	1	94	11 24 773 5	AGGREGAT HYDR
TEMPERATURSENSOR	11349182	8	2	217	11 24 114 5	ANLAGE HARNSTOFF EINBAU
THERMOSTAT	10154798	2	1	284	10 14 821 5	THERMOSTATGEHAEUSE AN
THERMOSTAT	592293814	260	1	432	11 93 934 6	KLIMAANLAGE
THERMOSTATGEHAEUSE	10148200	1	1	284	10 14 821 5	THERMOSTATGEHAEUSE AN
THERMOSTATGEHAEUSE AN	10148215	380	1	224	12 42 545 4	DIESELMOTOR
TRAGEGURT	10556012	2	1	648	10 55 601 1	ABSTURZSICHERUNG KPL
TRAGROHR	11245756	1	1	636	11 24 575 5	PODEST
TRAGROHR	11245757	2	2	636	11 24 575 5	PODEST
TRAGROHR	958097914	10	2	483	99 26 718 14	PODEST
TRAGROLLE KPL	790523314	15	2	467	11 89 365 0	RAUPENTRAEGER RE KPL
TRAGROLLE KPL	790523314	15	2	478	11 89 365 1	RAUPENTRAEGER LI KPL
TRAGSCHIENE	602106714	58	0.37	51	10 56 645 8	KLEMMKASTEN
TRANSPORTARM KPL	971333503	20	3	467	11 89 365 0	RAUPENTRAEGER RE KPL
TRANSPORTARM KPL	971333503	20	3	478	11 89 365 1	RAUPENTRAEGER LI KPL
TRANSPORTKONSOLE	10145229	1	1	298	10 14 286 4	TRANSPORTVORRICHTUNG
TRANSPORTSICHERUNG	11305670	18	1	650	11 29 473 7	LAUFSTEG ZWISCHENSTUEC
TRANSPORTSICHERUNG	11305670	19	1	654	11 29 474 2	LAUFSTEG ZWISCHENSTUEC
TRANSPORTSICHERUNG	11305670	21	1	655	11 29 474 3	LAUFSTEG ZWISCHENSTUEC

Bezeichnung	Artikel	Pos.	Menge	Blatt	Baugruppe	Bezeichnung
TRANSPORTSICHERUNG	11940876	11	1	548	11 93 749 9	MONTAGEEINHEIT
TRANSPORTSICHERUNG	11940876	11	1	566	11 93 750 1	MONTAGEEINHEIT
TRANSPORTSICHERUNG	11940876	11	1	573	11 93 750 4	MONTAGEEINHEIT
TRANSPORTVORRICHTUNG	10142864	481	1	224	12 42 545 4	DIESELMOTOR
TRANSPORTVORRICHTUNG	9079823	480	1	224	12 42 545 4	DIESELMOTOR
TRAVERSE	10589483	14	1	469	10 55 716 2	LEITRAD KPL
TRAVERSE	919075014	2	1	593	99 48 521 14	SPITZEN AL KPL
TRENNRELAIS	630120108	81	4	406	10 55 963 5	SCHALTSCHR X1
TRENNWAND	602832314	72	1	406	10 55 963 5	SCHALTSCHR X1
TRIEBWELLE	11219920	1	1	100	11 21 990 2	TRIEBWERK
TRIEBWELLE	11940177	2	1	389	70 23 828	TRIEBWERK
TRIEBWELLE	11940205	2	1	391	11 94 017 7	TRIEBWELLE
TRIEBWERK	10287664	1	1	177	11 21 593 6	PUMPENELEMENT
TRIEBWERK	10287725	1	1	178	10 28 766 4	TRIEBWERK
TRIEBWERK	10324889	1	1	168	11 22 127 4	PUMPENELEMENT
TRIEBWERK	10324892	1	1	169	10 32 488 9	TRIEBWERK
TRIEBWERK	10503513	1	1	451	51 24 059 14	V.MOTOR
TRIEBWERK	11219902	1	1	99	10 53 430 7	V.PUMPE
TRIEBWERK	7023828	1	1	388	51 22 991 14	OELMOTOR
TRIEBWERK HYDRAULIKTEIL	10007947	1	1	452	10 50 351 3	TRIEBWERK
TRIEBWERK HYDRAULIKTEIL	11219924	3	1	100	11 21 990 2	TRIEBWERK
TRIEBWERK HYDRAULIKTEIL	11940176	1	1	389	70 23 828	TRIEBWERK
TRITTSTUFE	10501783	1	1	475	10 50 179 5	AUFSTIEG KPL
TROCKNER	11236711	4	1	706	11 21 750 0	VERFLUESSIGER
TROMMEL	938850101	1	1	350	93 88 500 01	SEILTROMMEL
TROMMELKOERPER	10227104	1	1	519	61 61 541 14	KABELTROMMEL
TUELLENGEHAEUSE	10036809	42	1	516	11 90 151 1	KABELSATZ 1 ANLENKSTUECK
TUELLENGEHAEUSE	693155014	32	1	516	11 90 151 1	KABELSATZ 1 ANLENKSTUECK
TUELLENGEHAEUSE	693155014	30	1	595	97 14 959 03	SPITZENENDSCHALTER EL
TUER	10565777	1	1	327	10 56 580 8	TUER
TUER	10565808	13	1	317	11 24 409 1	VERKLEIDUNG
TUER	10566237	6	1	317	11 24 409 1	VERKLEIDUNG
TUER	10566238	1	1	326	10 56 623 7	TUER
TUER	10578835	3	1	317	11 24 409 1	VERKLEIDUNG
TUER	10578836	1	1	321	10 57 883 5	TUER
TUER	10578972	1	1	323	10 57 897 6	TUER
TUER	10578976	4	5	317	11 24 409 1	VERKLEIDUNG
TUER	10579397	1	1	325	10 57 940 0	TUER
TUER	10579400	5	1	317	11 24 409 1	VERKLEIDUNG
TUERDICHTUNG	592285714	3	1	423	10 35 007 6	SCHIEBETUER
TUERE ZUBEHOEHR	10226454	2	1	419	10 35 008 0	KABINE
TUERGRIFF INNEN	10226473	19	1	423	10 35 007 6	SCHIEBETUER
TUERGRIFF INNEN	10226478	21	1	423	10 35 007 6	SCHIEBETUER
TUERKEIL	790549214	15	9	319	11 24 409 1	VERKLEIDUNG
TUERKEIL PUFFER	790549314	9	1	321	10 57 883 5	TUER
TUERKEIL PUFFER	790549314	9	1	323	10 57 897 6	TUER
TUERKEIL PUFFER	790549314	11	1	325	10 57 940 0	TUER
TUERKEIL PUFFER	790549314	11	1	326	10 56 623 7	TUER
TUERKEIL PUFFER	790549314	9	1	327	10 56 580 8	TUER
TUERSCHLOSS	10353879	20	1	321	10 57 883 5	TUER
TUERSCHLOSS	10353879	3	1	323	10 57 897 6	TUER
TUERSCHLOSS	10353879	10	1	325	10 57 940 0	TUER
TUERSCHLOSS	10353879	10	1	326	10 56 623 7	TUER
TUERSCHLOSS	10353879	6	1	327	10 56 580 8	TUER
TURAS	10521183	12	1	467	11 89 365 0	RAUPENTRAEGER RE KPL
TURAS	10521183	12	1	478	11 89 365 1	RAUPENTRAEGER LI KPL
TURBOLADER	10139624	1	1	292	10 14 013 6	ATL-ANBAU
TYPENSCHILD	11226148	220	1	387	51 14 347 14	DW SICHERUNGSBLOCK
TYPENSCHILD	11276851	53	1	2	01 38 376 14	LR 1300 SX
U-PROFIL	11225259	23	3	331	11 24 922 2	ABDECKUNG UNTERSEITE

Bezeichnung	Artikel	Pos.	Menge	Blatt	Baugruppe	Bezeichnung
U-STAHL	10222995	59	2	510	11 23 820 3	ANLENKSTUECK KPL
U-STAHL	10565639	11	2	521	10 58 193 7	GITTERROST KPL
U-STAHL	10581999	21	2	521	10 58 193 7	GITTERROST KPL
U-STAHL	10582001	77	1	511	11 23 820 3	ANLENKSTUECK KPL
U-STAHL	10582001	22	1	521	10 58 193 7	GITTERROST KPL
U-STAHL	10582020	50	2	510	11 23 820 3	ANLENKSTUECK KPL
UEBERBRUECKUNGSSTECKE	918365114	91	1	46	11 24 519 0	OW EL
UEBERDRUCKVENTIL	10152592	10	1	252	10 12 948 0	OELKUEHLER VORM.
UEBERWURFMUTTER M14X1.	10816957	27	1	8	11 92 958 8	LUFTFUEHRUNG KPL
UEBERWURFMUTTER M14X1.	10816957	27	5	217	11 24 114 5	ANLAGE HARNSTOFF EINBAU
UMBAU EL NRS	11931926	60	1	5	11 93 045 7	UMBAUSATZ NRS
UMBAUSATZ NRS	11930457	4	1	2	01 38 376 14	LR 1300 SX
UMLENKROLLE KPL	991413714	32	1	538	11 24 444 4	A-BOCK 1 KPL
UMLENKROLLE VORM.	10149360	3	2	280	10 14 286 0	KLIMAKOMPRESSOR ANBAU
UMRUESTSATZ	12427052	2	1	6	11 93 098 7	DIESELMOTOR UMBAU
UNTERFLASCHE	790411214	133	1	3	01 38 376 14	LR 1300 SX
UNTERFLASCHE	790520514	141	1	3	01 38 376 14	LR 1300 SX
UW HYDR	11893003	2	1	443	11 89 364 8	UW KPL
UW KPL	11893648	33	1	2	01 38 376 14	LR 1300 SX
UW PODEST	11241478	554	1	3	01 38 376 14	LR 1300 SX
UW PODEST	992338914	38	1	2	01 38 376 14	LR 1300 SX
V-RING	10324881	10	1	170	10 32 489 2	TRIEBWERK
V-RING	11251437	5	1	450	11 89 617 8	DS
V.MOTOR	11251232	2	1	486	11 26 260 6	WINDE 1 HYDR
V.MOTOR	11251232	2	1	501	11 26 261 1	WINDE 2 HYDR
V.MOTOR	512405914	3	2	446	11 89 300 5	VERROHRUNG HYDR
V.PUMPE	10128787	6	1	94	11 24 773 5	AGGREGAT HYDR
V.PUMPE	10226013	9	1	94	11 24 773 5	AGGREGAT HYDR
V.PUMPE	10226505	8	1	94	11 24 773 5	AGGREGAT HYDR
V.PUMPE	10530653	5	2	94	11 24 773 5	AGGREGAT HYDR
V.PUMPE	10534307	3	2	94	11 24 773 5	AGGREGAT HYDR
VENTIL	10011832	13	1	228	10 14 768 6	AGGREGATETRAEGER ANBA
VENTIL	10011832	14	1	252	10 12 948 0	OELKUEHLER VORM.
VENTIL	10101193	201	1	30	11 28 647 6	VENTILBLOCK
VENTIL	10445040	220	1	529	10 09 917 3	DOPPELWIRKZYL
VENTIL	11224762	12	2	455	11 22 473 8	VERSTELLUNG
VENTIL	11932853	2	1	40	51 16 576 14	TEMPERATURREGLER
VENTIL	592293314	70	1	432	11 93 934 6	KLIMAANLAGE
VENTIL	7026676	203	1	30	11 28 647 6	VENTILBLOCK
VENTILBLOCK	10225408	4	1	85	10 51 969 5	A-BOCK AUFRICHTZYL HYDR
VENTILBLOCK	10351486	3	1	20	11 29 618 6	OW HYDR
VENTILBLOCK	11286476	1	1	20	11 29 618 6	OW HYDR
VENTILBLOCK	592145814	4	1	20	11 29 618 6	OW HYDR
VENTILBLOCKEINZELSCHEIB	10541514	6	1	20	11 29 618 6	OW HYDR
VENTILBLOCKSPEISEDRUCK	511637714	15	1	94	11 24 773 5	AGGREGAT HYDR
VENTILBRUECKE	10119695	2	2	245	10 14 843 8	KIPPHEBELBOCK KPL.
VENTILHALTER	954598503	12	2	333	11 24 483 7	BEF-TEILE OW
VENTILHALTER	954598503	13	1	343	10 51 969 7	NADELEINZIEHWINDE
VENTILHALTERUNG	994001014	28	1	618	10 51 743 9	SEILEINZIEHWINDE KPL NRS
VENTILHUELSE	9267340	10	1	118	92 67 343	ENTLUEFTUNGSVENTIL
VENTILPLATTE	10575966	17	1	333	11 24 483 7	BEF-TEILE OW
VENTILSCHRAUBE	11214946	1	1	456	10 44 656 6	WECHSELVENTIL
VENTILSITZ	9278874	10	1	125	92 78 875	DRUCKABSCHNEIDUNG
VERBANDSKASSETTE	789011714	13	1	2	01 38 376 14	LR 1300 SX
VERBINDUNG OW UW	10519696	31	1	2	01 38 376 14	LR 1300 SX
VERBINDUNGSLASCHE	9887828	14	2	117	10 11 835 0	ANSCHLUSSGEHAEUSE
VERBINDUNGSLEITUNG	10141549	1	1	275	10 14 736 4	LUFTANSAUGUNG ANBAU
VERBINDUNGSLEITUNG ANBA	10149676	230	1	224	12 42 545 4	DIESELMOTOR
VERBINDUNGSROHR	10444797	75	1	218	11 24 114 5	ANLAGE HARNSTOFF EINBAU
VERDAMPFER	592293614	230	1	432	11 93 934 6	KLIMAANLAGE

Bezeichnung	Artikel	Pos.	Menge	Blatt	Baugruppe	Bezeichnung
VERFLUESSIGER	11217500	11	1	705	11 93 621 2	KLIMAANLAGE NRS
VERKLEIDUNG	11244091	1	1	313	11 24 409 0	VERKLEIDUNG OW EINBAU KP
VERKLEIDUNG	592290114	78	1	420	10 35 008 0	KABINE
VERKLEIDUNG OW EINBAU KP	11244090	11	1	90	11 26 560 6	AGGREGAT DIESELMOTOR
VERKLEIDUNG RE	592289814	72	1	420	10 35 008 0	KABINE
VERLAENGERUNG 1 " X 410M	885392414	45	1	504	10 56 187 5	WERKZEUGAUSRUESTUNG
VERLAENGERUNGSKABEL	614027114	74	1	403	11 27 973 6	KABINE EL
VERRIEGELUNG	10572075	36	1	421	10 22 645 4	TUERE ZUBEHOEHR
VERROHRUNG HYDR	10517262	2	1	619	10 54 251 6	SEILEINZUGSWINDE HYDR NR
VERROHRUNG HYDR	10517281	2	1	701	10 51 728 0	KABINENNEIGUNG NRS
VERROHRUNG HYDR	10519591	2	1	526	10 58 510 8	RUECKFALLSTUETZEN HYDR
VERROHRUNG HYDR	10552161	2	1	383	10 51 968 3	DW HYDR
VERROHRUNG HYDR	10554594	2	1	689	10 53 635 1	GLEICHLAUF HYDR NRS
VERROHRUNG HYDR	10561735	2	1	714	11 27 267 1	LUFTKLAPPEN HYDR NRS
VERROHRUNG HYDR	11235248	2	1	683	11 23 524 6	JACK-UP SYSTEM HYDR NRS
VERROHRUNG HYDR	11893005	2	1	444	11 89 300 3	UW HYDR
VERROHRUNG HYDR	11894083	2	1	677	11 89 408 0	JACK-UP SYSTEM HYDR NRS
VERSCHLUSSATZ	11219369	4	1	104	11 21 991 0	PUMPENGEHAEUSE
VERSCHLUSSDECKEL	10599796	13	1	200	11 28 734 7	AUSGLEICHSBEHAELTER
VERSCHLUSSDECKEL	11241269	12	1	200	11 28 734 7	AUSGLEICHSBEHAELTER
VERSCHLUSSDECKEL	4001664	3	11	226	11 38 961 7	KURBELGEHAEUSE KPL. MIT
VERSCHLUSSDECKEL	4980362	2	6	226	11 38 961 7	KURBELGEHAEUSE KPL. MIT
VERSCHLUSSDECKEL	9144757	4	1	248	10 12 653 5	ZYLINDERKOPFDECKEL ANBA
VERSCHLUSSFLANSCH	944672614	42	1	20	11 29 618 6	OW HYDR
VERSCHLUSSFLANSCH	949341514	45	1	20	11 29 618 6	OW HYDR
VERSCHLUSSFLANSCH SAE	11293256	44	4	20	11 29 618 6	OW HYDR
VERSCHLUSSFLANSCH SAE	11293256	15	1	191	10 57 532 2	ANSAUGROHR OEL KPL
VERSCHLUSSFLANSCH SAE	510705314	43	2	20	11 29 618 6	OW HYDR
VERSCHLUSSKLAPPE	11219856	11	1	562	11 23 290 7	AUFLAGE KPL
VERSCHLUSSRING	10650270	31	1	388	51 22 991 14	OELMOTOR
VERSCHLUSSRING	11940208	1	1	392	10 65 027 0	VERSCHLUSSRING
VERSCHLUSSRING	7013563	1	1	393	11 94 020 8	VERSCHLUSSRING
VERSCHLUSSRING	9885628	17	1	136	92 68 016	RS VERSCHLUSSRING
VERSCHLUSSSCHRAUBE		84	1	353	93 88 497 01	PLANETENGETRIEBE
VERSCHLUSSSCHRAUBE		86	2	353	93 88 497 01	PLANETENGETRIEBE
VERSCHLUSSSCHRAUBE	10041903	10	5	228	10 14 768 6	AGGREGATETRAEGER ANBA
VERSCHLUSSSCHRAUBE	10115232	13	1	455	11 22 473 8	VERSTELLUNG
VERSCHLUSSSCHRAUBE	10116078	4	1	268	10 14 675 3	KRAFTSTOFFFEINFILTER
VERSCHLUSSSCHRAUBE	10137108	40	1	127	90 77 464	RS FLANSCH
VERSCHLUSSSCHRAUBE	10137108	29	3	153	10 14 131 6	ANSCHLUSSPLATTE VORM.
VERSCHLUSSSCHRAUBE	10137108	19	1	158	10 13 803 3	DICHTSATZ KPL.
VERSCHLUSSSCHRAUBE	10137108	30	3	159	10 13 803 4	DS ANSCHLUSSPLATTE
VERSCHLUSSSCHRAUBE	10137113	20	3	158	10 13 803 3	DICHTSATZ KPL.
VERSCHLUSSSCHRAUBE	10137113	24	4	159	10 13 803 4	DS ANSCHLUSSPLATTE
VERSCHLUSSSCHRAUBE	10137115	27	2	153	10 14 131 6	ANSCHLUSSPLATTE VORM.
VERSCHLUSSSCHRAUBE	10137115	27	2	159	10 13 803 4	DS ANSCHLUSSPLATTE
VERSCHLUSSSCHRAUBE	10137121	28	2	115	10 11 834 9	DOPPELV.PUMPE
VERSCHLUSSSCHRAUBE	10137121	29	2	138	92 76 408	DS DOPPELPUMPE
VERSCHLUSSSCHRAUBE	10137121	21	1	139	10 12 878 7	V.PUMPE
VERSCHLUSSSCHRAUBE	10137312	20	1	153	10 14 131 6	ANSCHLUSSPLATTE VORM.
VERSCHLUSSSCHRAUBE	10137312	20	1	159	10 13 803 4	DS ANSCHLUSSPLATTE
VERSCHLUSSSCHRAUBE	10519025	30	1	455	11 22 473 8	VERSTELLUNG
VERSCHLUSSSCHRAUBE	10598295	55	4	202	11 24 114 1	KUEHLER EINBAU LADELUFT
VERSCHLUSSSCHRAUBE	10598295	20	2	718	11 31 446 3	LADELUFTROHR KPL
VERSCHLUSSSCHRAUBE	11217837	30	1	168	11 22 127 4	PUMPENELEMENT
VERSCHLUSSSCHRAUBE	11224761	7	1	455	11 22 473 8	VERSTELLUNG
VERSCHLUSSSCHRAUBE	11267402	20	1	106	11 21 993 0	PUMPENGEHAEUSE
VERSCHLUSSSCHRAUBE	11267403	28	1	106	11 21 993 0	PUMPENGEHAEUSE
VERSCHLUSSSCHRAUBE	11267415	1	1	107	10 59 347 4	DRUCKBEGRENZUNGSVENTI
VERSCHLUSSSCHRAUBE	11267421	1	1	108	11 21 936 9	VERSCHLUSSATZ

Bezeichnung	Artikel	Pos.	Menge	Blatt	Baugruppe	Bezeichnung
VERSCHLUSSSCHRAUBE	11267439	1	1	109	11 06 730 4	ABSCHALTVENTIL
VERSCHLUSSSCHRAUBE	11267451	1	1	111	11 26 744 7	WECHSELVENTIL
VERSCHLUSSSCHRAUBE	477510201	2	4	396	90 01 376 2	DREHWERKANTRIEB
VERSCHLUSSSCHRAUBE	592316314	210	1	98	11 24 682 0	VERTEILERGETRIEBE
VERSCHLUSSSCHRAUBE	7361961	28	1	356	93 36 755 01	OELMESSEINRICHTUNG
VERSCHLUSSSCHRAUBE	7380177	4	3	226	11 38 961 7	KURBELGEHAEUSE KPL. MIT
VERSCHLUSSSCHRAUBE	7380566	6	3	226	11 38 961 7	KURBELGEHAEUSE KPL. MIT
VERSCHLUSSSCHRAUBE	7380566	12	1	252	10 12 948 0	OELKUEHLER VORM.
VERSCHLUSSSCHRAUBE	7380566	7	1	274	10 14 736 9	ANSAUGSTUTZEN ANBAU
VERSCHLUSSSCHRAUBE	7380566	20	1	292	10 14 013 6	ATL-ANBAU
VERSCHLUSSSCHRAUBE	7380688	3	2	268	10 14 675 3	KRAFTSTOFFFEINFILTER
VERSCHLUSSSCHRAUBE	7381457	7	2	226	11 38 961 7	KURBELGEHAEUSE KPL. MIT
VERSCHLUSSSCHRAUBE	7381457	17	1	274	10 14 736 9	ANSAUGSTUTZEN ANBAU
VERSCHLUSSSCHRAUBE	7381457	21	1	292	10 14 013 6	ATL-ANBAU
VERSCHLUSSSCHRAUBE	7381638	9	2	14	11 41 475 7	ANBAUTEILE LUFTPRESSER
VERSCHLUSSSCHRAUBE	7381638	11	1	252	10 12 948 0	OELKUEHLER VORM.
VERSCHLUSSSCHRAUBE	7381638	13	1	276	10 14 967 6	VERBINDUNGSLEITUNG ANBA
VERSCHLUSSSCHRAUBE	7381638	10	2	299	10 11 557 7	SCHWUNGRADGEHAEUSE AN
VERSCHLUSSSCHRAUBE	7381638	4	1	307	10 14 637 4	VERSCHLUSSTEILE
VERSCHLUSSSCHRAUBE	7382203	5	2	307	10 14 637 4	VERSCHLUSSTEILE
VERSCHLUSSSCHRAUBE	7382204	8	2	252	10 12 948 0	OELKUEHLER VORM.
VERSCHLUSSSCHRAUBE	7414500	24	3	455	11 22 473 8	VERSTELLUNG
VERSCHLUSSSCHRAUBE	933676601	23	1	356	93 36 755 01	OELMESSEINRICHTUNG
VERSCHLUSSSCHRAUBE 11S	10137918	2	1	229	10 13 845 0	ENDREGELVENTIL
VERSCHLUSSSCHRAUBE 3/4"-	10008093	5	1	175	10 22 601 3	V.PUMPE
VERSCHLUSSSCHRAUBE 3/4"-	10008093	30	1	177	11 21 593 6	PUMPENELEMENT
VERSCHLUSSSCHRAUBE 7/16	10324900	4	1	171	10 35 160 3	STEUERVENTIL
VERSCHLUSSSCHRAUBE AEH	409710601	67	3	471	96 93 178 01	FAHRANTRIEB
VERSCHLUSSSCHRAUBE D26	505105814	250	2	98	11 24 682 0	VERTEILERGETRIEBE
VERSCHLUSSSCHRAUBE DIN	403900101	80	1	627	54 02 703 14	FLANSCH KPL
VERSCHLUSSSCHRAUBE DIN	403900101	43	4	681	11 89 568 6	SELBSTVERLADESYSTEM NR
VERSCHLUSSSCHRAUBE DIN	403900501	22	1	153	10 14 131 6	ANSCHLUSSPLATTE VORM.
VERSCHLUSSSCHRAUBE DIN	11239915	3	1	671	51 16 404 14	SENKBREMSVENTIL
VERSCHLUSSSCHRAUBE DIN	11239904	5	1	673	59 21 584 14	SENKBREMSVENTIL
VERSCHLUSSSCHRAUBE DIN	11239897	4	1	673	59 21 584 14	SENKBREMSVENTIL
VERSCHLUSSSCHRAUBE DIN	502027614	60	2	380	99 04 645 14	ANTRIEB
VERSCHLUSSSCHRAUBE DIN	502027514	122	1	380	99 04 645 14	ANTRIEB
VERSCHLUSSSCHRAUBE DIN	4600320	64	1	380	99 04 645 14	ANTRIEB
VERSCHLUSSSCHRAUBE DIN	404101608	30	2	626	54 02 702 14	SEILTROMMEL KPL
VERSCHLUSSSCHRAUBE DIN	4000898	480	9	98	11 24 682 0	VERTEILERGETRIEBE
VERSCHLUSSSCHRAUBE G1/	11226023	60	2	387	51 14 347 14	DW SICHERUNGSBLOCK
VERSCHLUSSSCHRAUBE G1/	11226129	150	1	387	51 14 347 14	DW SICHERUNGSBLOCK
VERSCHLUSSSCHRAUBE G1/	11226130	160	1	387	51 14 347 14	DW SICHERUNGSBLOCK
VERSCHLUSSSCHRAUBE G3/	11226133	165	1	387	51 14 347 14	DW SICHERUNGSBLOCK
VERSCHLUSSSCHRAUBE M1	10115237	28	2	177	11 21 593 6	PUMPENELEMENT
VERSCHLUSSSCHRAUBE M1	10115237	25	4	455	11 22 473 8	VERSTELLUNG
VERSCHLUSSSCHRAUBE M1	10337050	4	1	102	11 21 992 7	DECKEL
VERSCHLUSSSCHRAUBE M1	10337050	4	1	103	11 21 992 9	DECKEL
VERSCHLUSSSCHRAUBE M1	10337050	12	1	106	11 21 993 0	PUMPENGEHAEUSE
VERSCHLUSSSCHRAUBE M1	10337050	13	1	106	11 21 993 0	PUMPENGEHAEUSE
VERSCHLUSSSCHRAUBE M1	10337050	14	1	106	11 21 993 0	PUMPENGEHAEUSE
VERSCHLUSSSCHRAUBE M1	10337050	15	1	106	11 21 993 0	PUMPENGEHAEUSE
VERSCHLUSSSCHRAUBE M1	10337050	16	1	106	11 21 993 0	PUMPENGEHAEUSE
VERSCHLUSSSCHRAUBE M1	10337050	17	1	106	11 21 993 0	PUMPENGEHAEUSE
VERSCHLUSSSCHRAUBE M1	10337050	18	1	106	11 21 993 0	PUMPENGEHAEUSE
VERSCHLUSSSCHRAUBE M1	10337050	26	1	114	11 21 991 8	LAGERFLANSCH
VERSCHLUSSSCHRAUBE M14	7371299	279	2	30	11 28 647 6	VENTILBLOCK
VERSCHLUSSSCHRAUBE M14	11234068	275	16	30	11 28 647 6	VENTILBLOCK
VERSCHLUSSSCHRAUBE M1	10337052	21	1	106	11 21 993 0	PUMPENGEHAEUSE
VERSCHLUSSSCHRAUBE M2	10340236	19	2	215	10 30 300 7	KRAFTSTOFFVORFILTER

Bezeichnung	Artikel	Pos.	Menge	Blatt	Baugruppe	Bezeichnung
VERSCHLUSSSCHRAUBE M2	10349193	22	1	106	11 21 993 0	PUMPENGEHAEUSE
VERSCHLUSSSCHRAUBE M2	10349193	23	1	106	11 21 993 0	PUMPENGEHAEUSE
VERSCHLUSSSCHRAUBE M24	7024504	172	14	30	11 28 647 6	VENTILBLOCK
VERSCHLUSSSCHRAUBE M2	10503477	13	1	451	51 24 059 14	V.MOTOR
VERSCHLUSSSCHRAUBE M30	10152594	2	1	253	10 15 259 2	UEBERDRUCKVENTIL
VERSCHLUSSSCHRAUBE M3	10289931	24	1	106	11 21 993 0	PUMPENGEHAEUSE
VERSCHLUSSSCHRAUBE M39	10228470	167	5	30	11 28 647 6	VENTILBLOCK
VERSCHLUSSSCHRAUBE M39	10301757	169	2	30	11 28 647 6	VENTILBLOCK
VERSCHLUSSSCHRAUBE M4	10525039	42	1	106	11 21 993 0	PUMPENGEHAEUSE
VERSCHLUSSSCHRAUBE M4	9885660	16	2	117	10 11 835 0	ANSCHLUSSGEHAEUSE
VERSCHLUSSSCHRAUBE M6	9268441	8	3	122	92 73 644	DS REGELVENTIL
VERSCHLUSSSCHRAUBE M6	9268441	8	5	153	10 14 131 6	ANSCHLUSSPLATTE VORM.
VERSCHLUSSSCHRAUBE M6	9268441	8	5	159	10 13 803 4	DS ANSCHLUSSPLATTE
VERSCHLUSSSCHRAUBE M8X	9881609	7	2	153	10 14 131 6	ANSCHLUSSPLATTE VORM.
VERSCHLUSSSCHRAUBE M8X	9881609	8	2	158	10 13 803 3	DICHTSATZ KPL.
VERSCHLUSSSCHRAUBE M8X	9881609	7	2	159	10 13 803 4	DS ANSCHLUSSPLATTE
VERSCHLUSSSTOPFEN		74	1	352	93 88 497 01	PLANETENGETRIEBE
VERSCHLUSSSTOPFEN	11922544	121	10	218	11 24 114 5	ANLAGE HARNSTOFF EINBAU
VERSCHLUSSSTOPFEN	11951869	7	1	219	11 24 240 8	HARNSTOFFBEHAELTER
VERSCHLUSSSTOPFEN	4097529	79	1	396	90 01 376 2	DREHWERKANTRIEB
VERSCHLUSSSTOPFEN	591645108	64	1	315	11 24 409 0	VERKLEIDUNG OW EINBAU KP
VERSCHLUSSSTOPFEN	779014014	65	2	315	11 24 409 0	VERKLEIDUNG OW EINBAU KP
VERSCHLUSSSTOPFEN	779016201	88	1	396	90 01 376 2	DREHWERKANTRIEB
VERSCHLUSSSTOPFEN	779016414	57	4	633	10 55 372 1	DACHGELAENDER NRS
VERSCHLUSSSTOPFEN	779016501	84	1	471	96 93 178 01	FAHRANTRIEB
VERSCHLUSSTEILE	10115664	452	1	224	12 42 545 4	DIESELMOTOR
VERSCHLUSSTEILE	10116110	521	1	224	12 42 545 4	DIESELMOTOR
VERSCHLUSSTEILE	10119128	522	1	225	12 42 545 4	DIESELMOTOR
VERSCHLUSSTEILE	10127979	526	1	225	12 42 545 4	DIESELMOTOR
VERSCHLUSSTEILE	10128439	524	1	225	12 42 545 4	DIESELMOTOR
VERSCHLUSSTEILE	10128440	1	1	301	10 12 843 9	VERSCHLUSSTEILE
VERSCHLUSSTEILE	10142747	630	1	225	12 42 545 4	DIESELMOTOR
VERSCHLUSSTEILE	10143304	15	1	288	10 14 601 2	WASSERSAMMELLEITUNG K
VERSCHLUSSTEILE	10144027	652	1	225	12 42 545 4	DIESELMOTOR
VERSCHLUSSTEILE	10146374	656	1	225	12 42 545 4	DIESELMOTOR
VERSCHLUSSTEILE	9078249	650	1	225	12 42 545 4	DIESELMOTOR
VERSCHLUSSTEILE	9078301	654	1	225	12 42 545 4	DIESELMOTOR
VERSCHMUTZUNGSANZEIGE	592200514	20	1	94	11 24 773 5	AGGREGAT HYDR
VERSCHRAUBUNG		80	1	352	93 88 497 01	PLANETENGETRIEBE
VERSCHRAUBUNG		83	3	352	93 88 497 01	PLANETENGETRIEBE
VERSCHRAUBUNG	10035314	35	1	8	11 92 958 8	LUFTFUEHRUNG KPL
VERSCHRAUBUNG	10035314	20	1	212	11 24 114 4	KRAFTSTOFFANLAGE
VERSCHRAUBUNG	10225291	710	3	26	11 29 618 6	OW HYDR
VERSCHRAUBUNG	10288174	32	1	8	11 92 958 8	LUFTFUEHRUNG KPL
VERSCHRAUBUNG	10531725	616	1	95	11 24 773 5	AGGREGAT HYDR
VERSCHRAUBUNG	10597776	620	4	385	10 55 216 1	VERROHRUNG HYDR
VERSCHRAUBUNG	10663840	28	1	8	11 92 958 8	LUFTFUEHRUNG KPL
VERSCHRAUBUNG	10663840	24	4	217	11 24 114 5	ANLAGE HARNSTOFF EINBAU
VERSCHRAUBUNG	10801399	17	2	293	10 14 511 2	ABGASSTUTZEN ANBAU
VERSCHRAUBUNG	10813933	6	1	14	11 41 475 7	ANBAUTEILE LUFTPRESSER
VERSCHRAUBUNG	10813933	9	2	270	10 14 588 5	LECKOELRUECKLAUF
VERSCHRAUBUNG	10813934	18	1	293	10 14 511 2	ABGASSTUTZEN ANBAU
VERSCHRAUBUNG	10813935	12	2	270	10 14 588 5	LECKOELRUECKLAUF
VERSCHRAUBUNG	10816958	49	1	217	11 24 114 5	ANLAGE HARNSTOFF EINBAU
VERSCHRAUBUNG	10872598	30	1	8	11 92 958 8	LUFTFUEHRUNG KPL
VERSCHRAUBUNG	11002988	4	1	260	10 15 278 7	DS HOCHDRUCKPUMPE
VERSCHRAUBUNG	11002988	9	1	269	10 14 333 9	KRAFTSTOFFLEITUNGEN
VERSCHRAUBUNG	11067653	8	2	214	10 55 091 1	KRAFTSTOFFVORFILTER AN
VERSCHRAUBUNG	11229464	3	1	214	10 55 091 1	KRAFTSTOFFVORFILTER AN
VERSCHRAUBUNG	11262806	10	1	71	11 26 557 2	MONTAGETEILE

Bezeichnung	Artikel	Pos.	Menge	Blatt	Baugruppe	Bezeichnung
VERSCHRAUBUNG	11600199	38	1	8	11 92 958 8	LUFTFUEHRUNG KPL
VERSCHRAUBUNG	11910325	190	1	529	10 09 917 3	DOPPELWIRKZYL
VERSCHRAUBUNG	11926905	28	1	217	11 24 114 5	ANLAGE HARNSTOFF EINBAU
VERSCHRAUBUNG	11926906	26	1	8	11 92 958 8	LUFTFUEHRUNG KPL
VERSCHRAUBUNG	11926906	26	5	217	11 24 114 5	ANLAGE HARNSTOFF EINBAU
VERSCHRAUBUNG	247000902	31	1	8	11 92 958 8	LUFTFUEHRUNG KPL
VERSCHRAUBUNG	247000902	11	4	217	11 24 114 5	ANLAGE HARNSTOFF EINBAU
VERSCHRAUBUNG	247001802	613	2	668	10 51 973 8	SELBSTVERLADESYSTEM H
VERSCHRAUBUNG	247009202	649	6	24	11 29 618 6	OW HYDR
VERSCHRAUBUNG	247009202	606	2	95	11 24 773 5	AGGREGAT HYDR
VERSCHRAUBUNG	247009202	644	1	448	11 89 300 5	VERROHRUNG HYDR
VERSCHRAUBUNG	247009202	611	2	513	10 51 826 1	ANLENKSTUECK HYDR
VERSCHRAUBUNG	247009402	724	10	26	11 29 618 6	OW HYDR
VERSCHRAUBUNG	247009402	609	1	85	10 51 969 5	A-BOCK AUFRICHTZYL HYDR
VERSCHRAUBUNG	247009402	605	4	95	11 24 773 5	AGGREGAT HYDR
VERSCHRAUBUNG	247009402	606	1	345	10 51 969 8	NADELEINZIEHWINDE HYDR
VERSCHRAUBUNG	247009402	610	1	362	10 51 968 7	HAUPT EZW HYDR
VERSCHRAUBUNG	247009402	605	2	385	10 55 216 1	VERROHRUNG HYDR
VERSCHRAUBUNG	247009402	706	2	715	10 56 173 5	VERROHRUNG HYDR
VERSCHRAUBUNG	247009702	612	13	22	11 29 618 6	OW HYDR
VERSCHRAUBUNG	247009702	608	1	85	10 51 969 5	A-BOCK AUFRICHTZYL HYDR
VERSCHRAUBUNG	247009702	602	10	95	11 24 773 5	AGGREGAT HYDR
VERSCHRAUBUNG	247009702	21	1	212	11 24 114 4	KRAFTSTOFFANLAGE
VERSCHRAUBUNG	247009702	604	1	385	10 55 216 1	VERROHRUNG HYDR
VERSCHRAUBUNG	247009702	603	4	446	11 89 300 5	VERROHRUNG HYDR
VERSCHRAUBUNG	247009702	711	1	486	11 26 260 6	WINDE 1 HYDR
VERSCHRAUBUNG	247009702	711	1	501	11 26 261 1	WINDE 2 HYDR
VERSCHRAUBUNG	247009702	610	3	513	10 51 826 1	ANLENKSTUECK HYDR
VERSCHRAUBUNG	247009702	604	1	620	10 51 726 2	VERROHRUNG HYDR
VERSCHRAUBUNG	247009702	701	1	678	11 89 408 3	VERROHRUNG HYDR
VERSCHRAUBUNG	247009902	675	5	24	11 29 618 6	OW HYDR
VERSCHRAUBUNG	247009902	610	7	95	11 24 773 5	AGGREGAT HYDR
VERSCHRAUBUNG	247009902	601	6	446	11 89 300 5	VERROHRUNG HYDR
VERSCHRAUBUNG	247010102	611	4	22	11 29 618 6	OW HYDR
VERSCHRAUBUNG	247010102	604	4	95	11 24 773 5	AGGREGAT HYDR
VERSCHRAUBUNG	247010102	609	2	513	10 51 826 1	ANLENKSTUECK HYDR
VERSCHRAUBUNG	247011602	610	1	22	11 29 618 6	OW HYDR
VERSCHRAUBUNG	247011602	307	1	95	11 24 773 5	AGGREGAT HYDR
VERSCHRAUBUNG	247011602	22	1	212	11 24 114 4	KRAFTSTOFFANLAGE
VERSCHRAUBUNG	247011602	613	2	446	11 89 300 5	VERROHRUNG HYDR
VERSCHRAUBUNG	247011602	603	1	513	10 51 826 1	ANLENKSTUECK HYDR
VERSCHRAUBUNG	247020902	654	3	24	11 29 618 6	OW HYDR
VERSCHRAUBUNG	247020902	316	1	95	11 24 773 5	AGGREGAT HYDR
VERSCHRAUBUNG	247027002	716	1	26	11 29 618 6	OW HYDR
VERSCHRAUBUNG	247027202	609	1	22	11 29 618 6	OW HYDR
VERSCHRAUBUNG	247027302	718	2	26	11 29 618 6	OW HYDR
VERSCHRAUBUNG	247027302	32	2	217	11 24 114 5	ANLAGE HARNSTOFF EINBAU
VERSCHRAUBUNG	247027302	602	4	446	11 89 300 5	VERROHRUNG HYDR
VERSCHRAUBUNG	247027402	606	1	513	10 51 826 1	ANLENKSTUECK HYDR
VERSCHRAUBUNG	247040302	680	1	24	11 29 618 6	OW HYDR
VERSCHRAUBUNG	247040302	605	1	345	10 51 969 8	NADELEINZIEHWINDE HYDR
VERSCHRAUBUNG	247040902	739	2	26	11 29 618 6	OW HYDR
VERSCHRAUBUNG	247040902	34	2	217	11 24 114 5	ANLAGE HARNSTOFF EINBAU
VERSCHRAUBUNG	247041102	39	1	8	11 92 958 8	LUFTFUEHRUNG KPL
VERSCHRAUBUNG	247041102	203	1	22	11 29 618 6	OW HYDR
VERSCHRAUBUNG	247041102	608	3	95	11 24 773 5	AGGREGAT HYDR
VERSCHRAUBUNG	247041102	608	4	446	11 89 300 5	VERROHRUNG HYDR
VERSCHRAUBUNG	247041402	607	3	95	11 24 773 5	AGGREGAT HYDR
VERSCHRAUBUNG	247041502	749	2	26	11 29 618 6	OW HYDR
VERSCHRAUBUNG	247041502	30	2	217	11 24 114 5	ANLAGE HARNSTOFF EINBAU

Bezeichnung	Artikel	Pos.	Menge	Blatt	Baugruppe	Bezeichnung
VERSCHRAUBUNG	247042402	681	4	24	11 29 618 6	OW HYDR
VERSCHRAUBUNG	247042402	611	6	446	11 89 300 5	VERROHRUNG HYDR
VERSCHRAUBUNG	247042402	605	1	668	10 51 973 8	SELBSTVERLADESYSTEM H
VERSCHRAUBUNG	247042402	607	1	702	10 51 728 1	VERROHRUNG HYDR
VERSCHRAUBUNG	247042502	746	2	26	11 29 618 6	OW HYDR
VERSCHRAUBUNG	247042702	607	1	22	11 29 618 6	OW HYDR
VERSCHRAUBUNG	247042702	605	2	513	10 51 826 1	ANLENKSTUECK HYDR
VERSCHRAUBUNG	247043102	606	2	22	11 29 618 6	OW HYDR
VERSCHRAUBUNG	247043102	614	2	95	11 24 773 5	AGGREGAT HYDR
VERSCHRAUBUNG	247043102	23	2	212	11 24 114 4	KRAFTSTOFFANLAGE
VERSCHRAUBUNG	247043202	615	2	85	10 51 969 5	A-BOCK AUFRICHTZYL HYDR
VERSCHRAUBUNG	247043502	613	2	95	11 24 773 5	AGGREGAT HYDR
VERSCHRAUBUNG	247044302	652	2	95	11 24 773 5	AGGREGAT HYDR
VERSCHRAUBUNG	247048802	625	6	22	11 29 618 6	OW HYDR
VERSCHRAUBUNG	247048802	215	2	513	10 51 826 1	ANLENKSTUECK HYDR
VERSCHRAUBUNG	247049002	618	1	22	11 29 618 6	OW HYDR
VERSCHRAUBUNG	247049002	33	2	217	11 24 114 5	ANLAGE HARNSTOFF EINBAU
VERSCHRAUBUNG	247049002	22	1	446	11 89 300 5	VERROHRUNG HYDR
VERSCHRAUBUNG	247049102	627	2	22	11 29 618 6	OW HYDR
VERSCHRAUBUNG	247049102	617	1	95	11 24 773 5	AGGREGAT HYDR
VERSCHRAUBUNG	247049102	204	2	513	10 51 826 1	ANLENKSTUECK HYDR
VERSCHRAUBUNG	247049202	631	1	22	11 29 618 6	OW HYDR
VERSCHRAUBUNG	247091002	302	1	94	11 24 773 5	AGGREGAT HYDR
VERSCHRAUBUNG	247105602	732	1	26	11 29 618 6	OW HYDR
VERSCHRAUBUNG	247108302	734	4	26	11 29 618 6	OW HYDR
VERSCHRAUBUNG	247108302	612	8	95	11 24 773 5	AGGREGAT HYDR
VERSCHRAUBUNG	247108302	24	4	212	11 24 114 4	KRAFTSTOFFANLAGE
VERSCHRAUBUNG	247108302	641	1	448	11 89 300 5	VERROHRUNG HYDR
VERSCHRAUBUNG	247112702	624	9	22	11 29 618 6	OW HYDR
VERSCHRAUBUNG	247112702	202	2	85	10 51 969 5	A-BOCK AUFRICHTZYL HYDR
VERSCHRAUBUNG	247112702	686	4	95	11 24 773 5	AGGREGAT HYDR
VERSCHRAUBUNG	247112702	603	2	385	10 55 216 1	VERROHRUNG HYDR
VERSCHRAUBUNG	247112702	201	2	513	10 51 826 1	ANLENKSTUECK HYDR
VERSCHRAUBUNG	247112702	706	2	661	10 51 971 2	SELBSTVERLADESYSTEM H
VERSCHRAUBUNG	247116402	605	3	22	11 29 618 6	OW HYDR
VERSCHRAUBUNG	247116402	607	3	513	10 51 826 1	ANLENKSTUECK HYDR
VERSCHRAUBUNG	247117302	752	15	26	11 29 618 6	OW HYDR
VERSCHRAUBUNG	247117302	616	1	85	10 51 969 5	A-BOCK AUFRICHTZYL HYDR
VERSCHRAUBUNG	247117302	628	1	95	11 24 773 5	AGGREGAT HYDR
VERSCHRAUBUNG	247117302	600	4	385	10 55 216 1	VERROHRUNG HYDR
VERSCHRAUBUNG	247117302	707	2	661	10 51 971 2	SELBSTVERLADESYSTEM H
VERSCHRAUBUNG	247117302	203	1	668	10 51 973 8	SELBSTVERLADESYSTEM H
VERSCHRAUBUNG	247117302	705	2	678	11 89 408 3	VERROHRUNG HYDR
VERSCHRAUBUNG	247117702	704	9	26	11 29 618 6	OW HYDR
VERSCHRAUBUNG	247117702	308	1	95	11 24 773 5	AGGREGAT HYDR
VERSCHRAUBUNG	247117702	35	1	195	11 24 114 0	KUEHLER EINBAU WASSER
VERSCHRAUBUNG	247117702	10	1	217	11 24 114 5	ANLAGE HARNSTOFF EINBAU
VERSCHRAUBUNG	247117702	204	4	385	10 55 216 1	VERROHRUNG HYDR
VERSCHRAUBUNG	247117702	632	1	448	11 89 300 5	VERROHRUNG HYDR
VERSCHRAUBUNG	247121102	727	1	26	11 29 618 6	OW HYDR
VERSCHRAUBUNG	247126202	37	1	8	11 92 958 8	LUFTFUEHRUNG KPL
VERSCHRAUBUNG	247126202	735	5	26	11 29 618 6	OW HYDR
VERSCHRAUBUNG	247126202	641	5	95	11 24 773 5	AGGREGAT HYDR
VERSCHRAUBUNG	247126202	35	2	217	11 24 114 5	ANLAGE HARNSTOFF EINBAU
VERSCHRAUBUNG	247126202	610	3	446	11 89 300 5	VERROHRUNG HYDR
VERSCHRAUBUNG	247128402	626	8	22	11 29 618 6	OW HYDR
VERSCHRAUBUNG	247128402	627	6	95	11 24 773 5	AGGREGAT HYDR
VERSCHRAUBUNG	247128402	608	4	385	10 55 216 1	VERROHRUNG HYDR
VERSCHRAUBUNG	247128402	708	2	661	10 51 971 2	SELBSTVERLADESYSTEM H
VERSCHRAUBUNG	247128402	701	1	715	10 56 173 5	VERROHRUNG HYDR

Bezeichnung	Artikel	Pos.	Menge	Blatt	Baugruppe	Bezeichnung
VERSCHRAUBUNG	247128502	731	2	26	11 29 618 6	OW HYDR
VERSCHRAUBUNG	247128502	604	1	345	10 51 969 8	NADELEINZIEHWINDE HYDR
VERSCHRAUBUNG	247128502	605	4	446	11 89 300 5	VERROHRUNG HYDR
VERSCHRAUBUNG	247128502	614	1	620	10 51 726 2	VERROHRUNG HYDR
VERSCHRAUBUNG	247128602	653	4	24	11 29 618 6	OW HYDR
VERSCHRAUBUNG	247128602	625	1	95	11 24 773 5	AGGREGAT HYDR
VERSCHRAUBUNG	247128602	16	1	217	11 24 114 5	ANLAGE HARNSTOFF EINBAU
VERSCHRAUBUNG	247128602	605	1	362	10 51 968 7	HAUPT EZW HYDR
VERSCHRAUBUNG	247128602	602	1	385	10 55 216 1	VERROHRUNG HYDR
VERSCHRAUBUNG	247128602	648	2	448	11 89 300 5	VERROHRUNG HYDR
VERSCHRAUBUNG	247138602	729	3	26	11 29 618 6	OW HYDR
VERSCHRAUBUNG	247138602	692	1	96	11 24 773 5	AGGREGAT HYDR
VERSCHRAUBUNG	247138602	19	2	217	11 24 114 5	ANLAGE HARNSTOFF EINBAU
VERSCHRAUBUNG	247138602	609	4	446	11 89 300 5	VERROHRUNG HYDR
VERSCHRAUBUNG	247142002	653	2	95	11 24 773 5	AGGREGAT HYDR
VERSCHRAUBUNG	247232702	660	2	24	11 29 618 6	OW HYDR
VERSCHRAUBUNG	247242302	629	11	22	11 29 618 6	OW HYDR
VERSCHRAUBUNG	247242302	317	1	95	11 24 773 5	AGGREGAT HYDR
VERSCHRAUBUNG	247242302	638	2	448	11 89 300 5	VERROHRUNG HYDR
VERSCHRAUBUNG	247261802	708	3	26	11 29 618 6	OW HYDR
VERSCHRAUBUNG	247261802	621	1	95	11 24 773 5	AGGREGAT HYDR
VERSCHRAUBUNG	470002414	700	1	506	91 90 239 14	LEITUNG HYDR
VERSCHRAUBUNG	470400701	11	1	356	93 36 755 01	OELMESSEINRICHTUNG
VERSCHRAUBUNG	470400701	26	1	356	93 36 755 01	OELMESSEINRICHTUNG
VERSCHRAUBUNG	470701414	691	1	96	11 24 773 5	AGGREGAT HYDR
VERSCHRAUBUNG	470702001	6	1	356	93 36 755 01	OELMESSEINRICHTUNG
VERSCHRAUBUNG	470905214	36	1	195	11 24 114 0	KUEHLER EINBAU WASSER
VERSCHRAUBUNG	470905714	37	3	195	11 24 114 0	KUEHLER EINBAU WASSER
VERSCHRAUBUNG	471004514	602	11	22	11 29 618 6	OW HYDR
VERSCHRAUBUNG	471004514	605	1	85	10 51 969 5	A-BOCK AUFRICHTZYL HYDR
VERSCHRAUBUNG	471004514	620	1	95	11 24 773 5	AGGREGAT HYDR
VERSCHRAUBUNG	471004514	617	6	448	11 89 300 5	VERROHRUNG HYDR
VERSCHRAUBUNG	471004514	703	2	661	10 51 971 2	SELBSTVERLADESYSTEM H
VERSCHRAUBUNG	471004514	611	1	668	10 51 973 8	SELBSTVERLADESYSTEM H
VERSCHRAUBUNG	471004514	605	2	702	10 51 728 1	VERROHRUNG HYDR
VERSCHRAUBUNG	471004614	619	2	95	11 24 773 5	AGGREGAT HYDR
VERSCHRAUBUNG	471004614	603	2	345	10 51 969 8	NADELEINZIEHWINDE HYDR
VERSCHRAUBUNG	471004614	607	2	362	10 51 968 7	HAUPT EZW HYDR
VERSCHRAUBUNG	471004614	618	2	448	11 89 300 5	VERROHRUNG HYDR
VERSCHRAUBUNG	471004614	708	1	486	11 26 260 6	WINDE 1 HYDR
VERSCHRAUBUNG	471004614	708	1	501	11 26 261 1	WINDE 2 HYDR
VERSCHRAUBUNG	471007014	706	4	26	11 29 618 6	OW HYDR
VERSCHRAUBUNG	471007014	619	1	385	10 55 216 1	VERROHRUNG HYDR
VERSCHRAUBUNG	471007914	315	1	95	11 24 773 5	AGGREGAT HYDR
VERSCHRAUBUNG	471008014	677	3	95	11 24 773 5	AGGREGAT HYDR
VERSCHRAUBUNG	471008214	601	3	22	11 29 618 6	OW HYDR
VERSCHRAUBUNG	471008214	611	8	95	11 24 773 5	AGGREGAT HYDR
VERSCHRAUBUNG	471008214	612	8	446	11 89 300 5	VERROHRUNG HYDR
VERSCHRAUBUNG	471008214	709	1	486	11 26 260 6	WINDE 1 HYDR
VERSCHRAUBUNG	471008214	709	1	501	11 26 261 1	WINDE 2 HYDR
VERSCHRAUBUNG	471016401	590	2	98	11 24 682 0	VERTEILERGETRIEBE
VERSCHRAUBUNG	471030208	704	1	715	10 56 173 5	VERROHRUNG HYDR
VERSCHRAUBUNG	471030508	600	3	22	11 29 618 6	OW HYDR
VERSCHRAUBUNG	471030508	678	1	95	11 24 773 5	AGGREGAT HYDR
VERSCHRAUBUNG	471030708	737	1	26	11 29 618 6	OW HYDR
VERSCHRAUBUNG	471030708	710	1	486	11 26 260 6	WINDE 1 HYDR
VERSCHRAUBUNG	471030708	710	1	501	11 26 261 1	WINDE 2 HYDR
VERSCHRAUBUNG	471031108	33	2	8	11 92 958 8	LUFTFUEHRUNG KPL
VERSCHRAUBUNG	471031108	672	1	95	11 24 773 5	AGGREGAT HYDR
VERSCHRAUBUNG	471031108	654	1	448	11 89 300 5	VERROHRUNG HYDR

Bezeichnung	Artikel	Pos.	Menge	Blatt	Baugruppe	Bezeichnung
VERSCHRAUBUNG	471031308	34	1	8	11 92 958 8	LUFTFUEHRUNG KPL
VERSCHRAUBUNG	471031308	632	2	95	11 24 773 5	AGGREGAT HYDR
VERSCHRAUBUNG	471031308	616	2	448	11 89 300 5	VERROHRUNG HYDR
VERSCHRAUBUNG	471031508	631	3	95	11 24 773 5	AGGREGAT HYDR
VERSCHRAUBUNG	471031508	31	2	217	11 24 114 5	ANLAGE HARNSTOFF EINBAU
VERSCHRAUBUNG	471031808	680	2	95	11 24 773 5	AGGREGAT HYDR
VERSCHRAUBUNG	471032108	610	2	668	10 51 973 8	SELBSTVERLADESYSTEM H
VERSCHRAUBUNG	471032608	622	1	22	11 29 618 6	OW HYDR
VERSCHRAUBUNG	471032608	604	2	85	10 51 969 5	A-BOCK AUFRICHTZYL HYDR
VERSCHRAUBUNG	471032608	615	6	446	11 89 300 5	VERROHRUNG HYDR
VERSCHRAUBUNG	471032608	606	2	528	10 51 959 1	VERROHRUNG HYDR
VERSCHRAUBUNG	471032608	700	8	684	11 23 524 8	VERROHRUNG HYDR
VERSCHRAUBUNG	471032608	600	1	690	10 55 459 4	VERROHRUNG HYDR
VERSCHRAUBUNG	471032708	658	4	24	11 29 618 6	OW HYDR
VERSCHRAUBUNG	471032708	603	2	85	10 51 969 5	A-BOCK AUFRICHTZYL HYDR
VERSCHRAUBUNG	471032708	600	24	446	11 89 300 5	VERROHRUNG HYDR
VERSCHRAUBUNG	471032708	627	2	528	10 51 959 1	VERROHRUNG HYDR
VERSCHRAUBUNG	471032708	704	2	661	10 51 971 2	SELBSTVERLADESYSTEM H
VERSCHRAUBUNG	471032708	703	8	678	11 89 408 3	VERROHRUNG HYDR
VERSCHRAUBUNG	471032708	609	1	702	10 51 728 1	VERROHRUNG HYDR
VERSCHRAUBUNG	471032808	621	27	22	11 29 618 6	OW HYDR
VERSCHRAUBUNG	471032808	630	3	95	11 24 773 5	AGGREGAT HYDR
VERSCHRAUBUNG	471032808	602	3	345	10 51 969 8	NADELEINZIEHWINDE HYDR
VERSCHRAUBUNG	471032808	609	3	362	10 51 968 7	HAUPT EZW HYDR
VERSCHRAUBUNG	471032808	622	2	448	11 89 300 5	VERROHRUNG HYDR
VERSCHRAUBUNG	471032808	701	1	506	91 90 239 14	LEITUNG HYDR
VERSCHRAUBUNG	471032808	600	1	702	10 51 728 1	VERROHRUNG HYDR
VERSCHRAUBUNG	471032808	705	3	715	10 56 173 5	VERROHRUNG HYDR
VERSCHRAUBUNG	471032908	616	1	22	11 29 618 6	OW HYDR
VERSCHRAUBUNG	471033014	629	1	95	11 24 773 5	AGGREGAT HYDR
VERSCHRAUBUNG	471033014	601	1	345	10 51 969 8	NADELEINZIEHWINDE HYDR
VERSCHRAUBUNG	471033014	651	2	448	11 89 300 5	VERROHRUNG HYDR
VERSCHRAUBUNG	471033014	602	2	620	10 51 726 2	VERROHRUNG HYDR
VERSCHRAUBUNG	471033114	707	1	26	11 29 618 6	OW HYDR
VERSCHRAUBUNG	471033214	722	2	26	11 29 618 6	OW HYDR
VERSCHRAUBUNG	471033214	636	1	448	11 89 300 5	VERROHRUNG HYDR
VERSCHRAUBUNG	471033214	608	3	513	10 51 826 1	ANLENKSTUECK HYDR
VERSCHRAUBUNG	471033214	605	3	528	10 51 959 1	VERROHRUNG HYDR
VERSCHRAUBUNG	471033214	603	2	620	10 51 726 2	VERROHRUNG HYDR
VERSCHRAUBUNG	471033214	709	2	661	10 51 971 2	SELBSTVERLADESYSTEM H
VERSCHRAUBUNG	471033214	704	1	678	11 89 408 3	VERROHRUNG HYDR
VERSCHRAUBUNG	471033314	606	1	362	10 51 968 7	HAUPT EZW HYDR
VERSCHRAUBUNG	471033414	725	1	26	11 29 618 6	OW HYDR
VERSCHRAUBUNG	471033614	738	1	26	11 29 618 6	OW HYDR
VERSCHRAUBUNG	471034414	726	2	26	11 29 618 6	OW HYDR
VERSCHRAUBUNG	471034414	612	2	385	10 55 216 1	VERROHRUNG HYDR
VERSCHRAUBUNG	471034414	604	2	513	10 51 826 1	ANLENKSTUECK HYDR
VERSCHRAUBUNG	471034708	672	4	24	11 29 618 6	OW HYDR
VERSCHRAUBUNG	471034708	637	1	95	11 24 773 5	AGGREGAT HYDR
VERSCHRAUBUNG	471034714	25	2	212	11 24 114 4	KRAFTSTOFFANLAGE
VERSCHRAUBUNG	471034714	607	1	345	10 51 969 8	NADELEINZIEHWINDE HYDR
VERSCHRAUBUNG	471036014	652	2	448	11 89 300 5	VERROHRUNG HYDR
VERSCHRAUBUNG	471039408	612	1	362	10 51 968 7	HAUPT EZW HYDR
VERSCHRAUBUNG	471039408	611	2	385	10 55 216 1	VERROHRUNG HYDR
VERSCHRAUBUNG	471039708	618	2	385	10 55 216 1	VERROHRUNG HYDR
VERSCHRAUBUNG	471039708	600	1	620	10 51 726 2	VERROHRUNG HYDR
VERSCHRAUBUNG	471039908	42	1	8	11 92 958 8	LUFTFUEHRUNG KPL
VERSCHRAUBUNG	471039908	635	3	95	11 24 773 5	AGGREGAT HYDR
VERSCHRAUBUNG	471039908	655	2	448	11 89 300 5	VERROHRUNG HYDR
VERSCHRAUBUNG	471100114	617	3	22	11 29 618 6	OW HYDR

Bezeichnung	Artikel	Pos.	Menge	Blatt	Baugruppe	Bezeichnung
VERSCHRAUBUNG	471100114	604	2	528	10 51 959 1	VERROHRUNG HYDR
VERSCHRAUBUNG	471100414	608	2	22	11 29 618 6	OW HYDR
VERSCHRAUBUNG	471100614	620	2	448	11 89 300 5	VERROHRUNG HYDR
VERSCHRAUBUNG	471100714	756	1	26	11 29 618 6	OW HYDR
VERSCHRAUBUNG	471100714	603	1	528	10 51 959 1	VERROHRUNG HYDR
VERSCHRAUBUNG	472001401	4	1	356	93 36 755 01	OELMESSEINRICHTUNG
VERSCHRAUBUNG	472531508	723	1	26	11 29 618 6	OW HYDR
VERSCHRAUBUNG	472531508	624	2	528	10 51 959 1	VERROHRUNG HYDR
VERSCHRAUBUNG	472531508	608	3	668	10 51 973 8	SELBSTVERLADESYSTEM H
VERSCHRAUBUNG	472531508	703	1	715	10 56 173 5	VERROHRUNG HYDR
VERSCHRAUBUNG	473201101	3	1	356	93 36 755 01	OELMESSEINRICHTUNG
VERSCHRAUBUNG	473201101	22	1	356	93 36 755 01	OELMESSEINRICHTUNG
VERSCHRAUBUNG	473210214	632	1	528	10 51 959 1	VERROHRUNG HYDR
VERSCHRAUBUNG	473210214	607	3	668	10 51 973 8	SELBSTVERLADESYSTEM H
VERSCHRAUBUNG	473210214	700	1	678	11 89 408 3	VERROHRUNG HYDR
VERSCHRAUBUNG	473231214	633	1	528	10 51 959 1	VERROHRUNG HYDR
VERSCHRAUBUNG	474001214	760	1	26	11 29 618 6	OW HYDR
VERSCHRAUBUNG	474002314	620	4	22	11 29 618 6	OW HYDR
VERSCHRAUBUNG	474002414	744	2	26	11 29 618 6	OW HYDR
VERSCHRAUBUNG	474002414	614	4	446	11 89 300 5	VERROHRUNG HYDR
VERSCHRAUBUNG	474032614	628	3	22	11 29 618 6	OW HYDR
VERSCHRAUBUNG	474032614	602	4	513	10 51 826 1	ANLENKSTUECK HYDR
VERSCHRAUBUNG	474032614	600	8	528	10 51 959 1	VERROHRUNG HYDR
VERSCHRAUBUNG	474032714	650	2	24	11 29 618 6	OW HYDR
VERSCHRAUBUNG	474032914	636	2	22	11 29 618 6	OW HYDR
VERSCHRAUBUNG	474033014	719	4	26	11 29 618 6	OW HYDR
VERSCHRAUBUNG	474033014	647	8	448	11 89 300 5	VERROHRUNG HYDR
VERSCHRAUBUNG	474033014	714	2	486	11 26 260 6	WINDE 1 HYDR
VERSCHRAUBUNG	474033014	714	2	501	11 26 261 1	WINDE 2 HYDR
VERSCHRAUBUNG	474033014	601	4	513	10 51 826 1	ANLENKSTUECK HYDR
VERSCHRAUBUNG	475002514	628	2	528	10 51 959 1	VERROHRUNG HYDR
VERSCHRAUBUNG	475033014	609	3	668	10 51 973 8	SELBSTVERLADESYSTEM H
VERSCHRAUBUNG	475033614	619	1	528	10 51 959 1	VERROHRUNG HYDR
VERSCHRAUBUNG	475501414	635	2	22	11 29 618 6	OW HYDR
VERSCHRAUBUNG	475501414	604	4	446	11 89 300 5	VERROHRUNG HYDR
VERSCHRAUBUNG	475501914	685	1	95	11 24 773 5	AGGREGAT HYDR
VERSCHRAUBUNG	475501914	606	1	668	10 51 973 8	SELBSTVERLADESYSTEM H
VERSCHRAUBUNG	475502514	625	4	448	11 89 300 5	VERROHRUNG HYDR
VERSCHRAUBUNG	475503314	212	2	513	10 51 826 1	ANLENKSTUECK HYDR
VERSCHRAUBUNG	476608008	39	1	195	11 24 114 0	KUEHLER EINBAU WASSER
VERSCHRAUBUNG	477102814	57	2	217	11 24 114 5	ANLAGE HARNSTOFF EINBAU
VERSCHRAUBUNG	477400314	690	2	96	11 24 773 5	AGGREGAT HYDR
VERSCHRAUBUNG	477400314	702	1	506	91 90 239 14	LEITUNG HYDR
VERSCHRAUBUNG	477400414	673	1	528	10 51 959 1	VERROHRUNG HYDR
VERSCHRAUBUNG	477400414	605	8	684	11 23 524 8	VERROHRUNG HYDR
VERSCHRAUBUNG	477400614	208	2	513	10 51 826 1	ANLENKSTUECK HYDR
VERSCHRAUBUNG	477400714	633	2	22	11 29 618 6	OW HYDR
VERSCHRAUBUNG	477400814	624	4	385	10 55 216 1	VERROHRUNG HYDR
VERSCHRAUBUNG	477401014	202	4	513	10 51 826 1	ANLENKSTUECK HYDR
VERSCHRAUBUNG	477401814	46	1	20	11 29 618 6	OW HYDR
VERSCHRAUBUNG	477430614	41	2	8	11 92 958 8	LUFTFUEHRUNG KPL
VERSCHRAUBUNG	477700114	639	2	22	11 29 618 6	OW HYDR
VERSCHRAUBUNG	477700114	655	1	95	11 24 773 5	AGGREGAT HYDR
VERSCHRAUBUNG	477700114	214	2	513	10 51 826 1	ANLENKSTUECK HYDR
VERSCHRAUBUNG	477700214	619	1	22	11 29 618 6	OW HYDR
VERSCHRAUBUNG	477700214	23	1	446	11 89 300 5	VERROHRUNG HYDR
VERSCHRAUBUNG	477700414	689	2	96	11 24 773 5	AGGREGAT HYDR
VERSCHRAUBUNG	477700414	703	1	506	91 90 239 14	LEITUNG HYDR
VERSCHRAUBUNG	477700514	638	6	22	11 29 618 6	OW HYDR
VERSCHRAUBUNG	477700514	213	2	513	10 51 826 1	ANLENKSTUECK HYDR

Bezeichnung	Artikel	Pos.	Menge	Blatt	Baugruppe	Bezeichnung
VERSCHRAUBUNG	477700514	202	1	528	10 51 959 1	VERROHRUNG HYDR
VERSCHRAUBUNG	477700514	606	8	684	11 23 524 8	VERROHRUNG HYDR
VERSCHRAUBUNG	477700714	47	1	20	11 29 618 6	OW HYDR
VERSCHRAUBUNG	477700814	634	1	22	11 29 618 6	OW HYDR
VERSCHRAUBUNG	477701114	207	2	513	10 51 826 1	ANLENKSTUECK HYDR
VERSCHRAUBUNG	477701414	632	2	22	11 29 618 6	OW HYDR
VERSCHRAUBUNG	477701514	625	4	385	10 55 216 1	VERROHRUNG HYDR
VERSCHRAUBUNG	477701814	211	4	513	10 51 826 1	ANLENKSTUECK HYDR
VERSCHRAUBUNG	477704514	40	1	8	11 92 958 8	LUFTFUEHRUNG KPL
VERSCHRAUBUNG	477704514	78	1	396	90 01 376 2	DREHWERKANTRIEB
VERSCHRAUBUNG	477704514	650	1	448	11 89 300 5	VERROHRUNG HYDR
VERSCHRAUBUNG	477704614	720	3	26	11 29 618 6	OW HYDR
VERSCHRAUBUNG	477704614	19	1	60	10 56 070 1	TANK HYDR KPL
VERSCHRAUBUNG	477704614	17	5	65	10 56 073 3	KRAFTSTOFFTANK KPL
VERSCHRAUBUNG	477704614	300	1	94	11 24 773 5	AGGREGAT HYDR
VERSCHRAUBUNG	477704914	35	2	5	11 93 045 7	UMBAUSATZ NRS
VERSCHRAUBUNG	477704914	306	1	95	11 24 773 5	AGGREGAT HYDR
VERSCHRAUBUNG	477704914	32	1	191	10 57 532 2	ANSAUGROHR OEL KPL
VERSCHRAUBUNG	477704914	38	4	195	11 24 114 0	KUEHLER EINBAU WASSER
VERSCHRAUBUNG	477704914	64	2	207	11 24 114 2	ANSAUGANLAGE LUFT
VERSCHRAUBUNG	477705114	202	1	362	10 51 968 7	HAUPT EZW HYDR
VERSCHRAUBUNG	477705214	58	1	217	11 24 114 5	ANLAGE HARNSTOFF EINBAU
VERSCHRAUBUNG	481930314	612	1	668	10 51 973 8	SELBSTVERLADESYSTEM H
VERSCHRAUBUNG	481930414	630	3	22	11 29 618 6	OW HYDR
VERSCHRAUBUNG	481930414	624	2	448	11 89 300 5	VERROHRUNG HYDR
VERSCHRAUBUNG	481930414	704	1	506	91 90 239 14	LEITUNG HYDR
VERSCHRAUBUNG	481930514	703	1	486	11 26 260 6	WINDE 1 HYDR
VERSCHRAUBUNG	481930514	703	1	501	11 26 261 1	WINDE 2 HYDR
VERSCHRAUBUNG	481930614	622	1	528	10 51 959 1	VERROHRUNG HYDR
VERSCHRAUBUNG	481930714	604	1	668	10 51 973 8	SELBSTVERLADESYSTEM H
VERSCHRAUBUNG	481931114	761	1	26	11 29 618 6	OW HYDR
VERSCHRAUBUNG	481931614	687	1	96	11 24 773 5	AGGREGAT HYDR
VERSCHRAUBUNG	481933014	623	4	448	11 89 300 5	VERROHRUNG HYDR
VERSCHRAUBUNG	481933614	319	1	95	11 24 773 5	AGGREGAT HYDR
VERSCHRAUBUNG	482330814	730	2	26	11 29 618 6	OW HYDR
VERSCHRAUBUNG	482330814	675	1	95	11 24 773 5	AGGREGAT HYDR
VERSCHRAUBUNG	482331114	603	3	668	10 51 973 8	SELBSTVERLADESYSTEM H
VERSCHRAUBUNG	482331914	721	3	26	11 29 618 6	OW HYDR
VERSCHRAUBUNG	482331914	600	2	513	10 51 826 1	ANLENKSTUECK HYDR
VERSCHRAUBUNG	482430314	693	1	24	11 29 618 6	OW HYDR
VERSCHRAUBUNG	482430314	201	1	385	10 55 216 1	VERROHRUNG HYDR
VERSCHRAUBUNG	482430614	606	2	446	11 89 300 5	VERROHRUNG HYDR
VERSCHRAUBUNG	482431214	602	1	668	10 51 973 8	SELBSTVERLADESYSTEM H
VERSCHRAUBUNG	482431314	204	1	22	11 29 618 6	OW HYDR
VERSCHRAUBUNG	482431314	643	2	95	11 24 773 5	AGGREGAT HYDR
VERSCHRAUBUNG	482431314	705	1	486	11 26 260 6	WINDE 1 HYDR
VERSCHRAUBUNG	482431314	705	1	501	11 26 261 1	WINDE 2 HYDR
VERSCHRAUBUNG	482431414	706	1	486	11 26 260 6	WINDE 1 HYDR
VERSCHRAUBUNG	482431414	706	1	501	11 26 261 1	WINDE 2 HYDR
VERSCHRAUBUNG	482431514	671	1	528	10 51 959 1	VERROHRUNG HYDR
VERSCHRAUBUNG	482431714	623	4	385	10 55 216 1	VERROHRUNG HYDR
VERSCHRAUBUNG	482530814	755	2	26	11 29 618 6	OW HYDR
VERSCHRAUBUNG	482530814	660	1	95	11 24 773 5	AGGREGAT HYDR
VERSCHRAUBUNG	482530914	736	1	26	11 29 618 6	OW HYDR
VERSCHRAUBUNG	482530914	301	2	94	11 24 773 5	AGGREGAT HYDR
VERSCHRAUBUNG	482531614	615	1	22	11 29 618 6	OW HYDR
VERSCHRAUBUNG	482531814	652	2	24	11 29 618 6	OW HYDR
VERSCHRAUBUNG	482531814	649	4	448	11 89 300 5	VERROHRUNG HYDR
VERSCHRAUBUNG	485430714	748	1	26	11 29 618 6	OW HYDR
VERSCHRAUBUNG	485431214	714	2	26	11 29 618 6	OW HYDR

Bezeichnung	Artikel	Pos.	Menge	Blatt	Baugruppe	Bezeichnung
VERSCHRAUBUNG	485431214	683	3	95	11 24 773 5	AGGREGAT HYDR
VERSCHRAUBUNG	485431314	666	4	24	11 29 618 6	OW HYDR
VERSCHRAUBUNG	485431414	205	1	22	11 29 618 6	OW HYDR
VERSCHRAUBUNG	485432814	759	1	26	11 29 618 6	OW HYDR
VERSCHRAUBUNG	485433314	684	1	95	11 24 773 5	AGGREGAT HYDR
VERSCHRAUBUNG	485433314	713	2	486	11 26 260 6	WINDE 1 HYDR
VERSCHRAUBUNG	485433314	713	2	501	11 26 261 1	WINDE 2 HYDR
VERSCHRAUBUNG	485433314	613	8	528	10 51 959 1	VERROHRUNG HYDR
VERSCHRAUBUNG	485433314	615	2	620	10 51 726 2	VERROHRUNG HYDR
VERSCHRAUBUNG	485433314	710	2	661	10 51 971 2	SELBSTVERLADESYSTEM H
VERSCHRAUBUNG	485433414	758	1	26	11 29 618 6	OW HYDR
VERSCHRAUBUNG	485433414	705	1	506	91 90 239 14	LEITUNG HYDR
VERSCHRAUBUNG	485433414	629	2	528	10 51 959 1	VERROHRUNG HYDR
VERSCHRAUBUNG	485433514	610	1	85	10 51 969 5	A-BOCK AUFRICHTZYL HYDR
VERSCHRAUBUNG	485433514	630	1	528	10 51 959 1	VERROHRUNG HYDR
VERSCHRAUBUNG	485434214	747	1	26	11 29 618 6	OW HYDR
VERSCHRAUBUNG	485435014	651	2	24	11 29 618 6	OW HYDR
VERSCHRAUBUNG	485435714	713	1	26	11 29 618 6	OW HYDR
VERSCHRAUBUNG	485436414	629	2	448	11 89 300 5	VERROHRUNG HYDR
VERSCHRAUBUNG	485436414	617	1	620	10 51 726 2	VERROHRUNG HYDR
VERSCHRAUBUNG	485437514	313	1	95	11 24 773 5	AGGREGAT HYDR
VERSCHRAUBUNG	491033414	601	1	668	10 51 973 8	SELBSTVERLADESYSTEM H
VERSCHRAUBUNG	491101214	757	1	26	11 29 618 6	OW HYDR
VERSCHRAUBUNG	4981232	1	2	272	10 14 179 0	ANSCHLUSSSTUECK VORM.
VERSCHRAUBUNG	4981235	3	1	237	10 14 591 9	OELMESSSTAB MIT ROHR
VERSCHRAUBUNG	4981235	10	1	292	10 14 013 6	ATL-ANBAU
VERSCHRAUBUNG	510701214	745	1	26	11 29 618 6	OW HYDR
VERSCHRAUBUNG	510701314	677	2	24	11 29 618 6	OW HYDR
VERSCHRAUBUNG	510701914	711	2	26	11 29 618 6	OW HYDR
VERSCHRAUBUNG	510702014	742	1	26	11 29 618 6	OW HYDR
VERSCHRAUBUNG	510702414	712	1	26	11 29 618 6	OW HYDR
VERSCHRAUBUNG	510702414	702	1	486	11 26 260 6	WINDE 1 HYDR
VERSCHRAUBUNG	510703914	740	1	26	11 29 618 6	OW HYDR
VERSCHRAUBUNG	510704614	664	1	24	11 29 618 6	OW HYDR
VERSCHRAUBUNG	510709114	600	1	668	10 51 973 8	SELBSTVERLADESYSTEM H
VERSCHRAUBUNG	510709214	679	1	95	11 24 773 5	AGGREGAT HYDR
VERSCHRAUBUNG	592286514	36	1	419	10 35 008 0	KABINE
VERSCHRAUBUNG	592286514	11	5	423	10 35 007 6	SCHIEBETUER
VERSCHRAUBUNG	7021521	19	1	292	10 14 013 6	ATL-ANBAU
VERSCHRAUBUNG	7027665	10	1	239	10 14 671 6	OELLEITUNG VORM.
VERSCHRAUBUNG	7362091	603	12	22	11 29 618 6	OW HYDR
VERSCHRAUBUNG	7362091	614	1	85	10 51 969 5	A-BOCK AUFRICHTZYL HYDR
VERSCHRAUBUNG	7362091	314	1	95	11 24 773 5	AGGREGAT HYDR
VERSCHRAUBUNG	7362091	637	2	448	11 89 300 5	VERROHRUNG HYDR
VERSCHRAUBUNG	7365616	653	2	448	11 89 300 5	VERROHRUNG HYDR
VERSCHRAUBUNG	7367776	613	12	22	11 29 618 6	OW HYDR
VERSCHRAUBUNG	7367776	603	4	95	11 24 773 5	AGGREGAT HYDR
VERSCHRAUBUNG	7367776	610	1	345	10 51 969 8	NADELEINZIEHWINDE HYDR
VERSCHRAUBUNG	7367776	611	1	362	10 51 968 7	HAUPT EZW HYDR
VERSCHRAUBUNG	7367776	621	4	448	11 89 300 5	VERROHRUNG HYDR
VERSCHRAUBUNG	7367776	704	1	486	11 26 260 6	WINDE 1 HYDR
VERSCHRAUBUNG	7367776	704	1	501	11 26 261 1	WINDE 2 HYDR
VERSCHRAUBUNG	7367776	614	1	528	10 51 959 1	VERROHRUNG HYDR
VERSCHRAUBUNG	7367776	702	1	715	10 56 173 5	VERROHRUNG HYDR
VERSCHRAUBUNG	7367986	670	3	24	11 29 618 6	OW HYDR
VERSCHRAUBUNG	7403569	202	3	385	10 55 216 1	VERROHRUNG HYDR
VERSCHRAUBUNG	7407098	608	8	528	10 51 959 1	VERROHRUNG HYDR
VERSCHRAUBUNG	7407098	616	2	620	10 51 726 2	VERROHRUNG HYDR
VERSCHRAUBUNG	7407108	305	1	95	11 24 773 5	AGGREGAT HYDR
VERSCHRAUBUNG	7407108	603	1	362	10 51 968 7	HAUPT EZW HYDR

Bezeichnung	Artikel	Pos.	Menge	Blatt	Baugruppe	Bezeichnung
VERSCHRAUBUNG	7407108	707	1	486	11 26 260 6	WINDE 1 HYDR
VERSCHRAUBUNG	7407108	707	1	501	11 26 261 1	WINDE 2 HYDR
VERSCHRAUBUNG	7410455	640	2	24	11 29 618 6	OW HYDR
VERSCHRAUBUNG	7410455	643	8	448	11 89 300 5	VERROHRUNG HYDR
VERSCHRAUBUNG	7617268	703	13	26	11 29 618 6	OW HYDR
VERSCHRAUBUNG	7617268	612	1	85	10 51 969 5	A-BOCK AUFRICHTZYL HYDR
VERSCHRAUBUNG	7617268	676	3	95	11 24 773 5	AGGREGAT HYDR
VERSCHRAUBUNG	7617268	613	1	362	10 51 968 7	HAUPT EZW HYDR
VERSCHRAUBUNG	7617268	628	6	448	11 89 300 5	VERROHRUNG HYDR
VERSCHRAUBUNG	7617268	602	3	702	10 51 728 1	VERROHRUNG HYDR
VERSCHRAUBUNG	7617354	611	1	85	10 51 969 5	A-BOCK AUFRICHTZYL HYDR
VERSCHRAUBUNG	7617354	634	11	448	11 89 300 5	VERROHRUNG HYDR
VERSCHRAUBUNG	7617354	611	7	528	10 51 959 1	VERROHRUNG HYDR
VERSCHRAUBUNG	7617354	702	4	661	10 51 971 2	SELBSTVERLADESYSTEM H
VERSCHRAUBUNG	7617354	601	1	690	10 55 459 4	VERROHRUNG HYDR
VERSCHRAUBUNG	7617354	608	1	702	10 51 728 1	VERROHRUNG HYDR
VERSCHRAUBUNG	7617460	705	1	26	11 29 618 6	OW HYDR
VERSCHRAUBUNG	7617460	613	1	85	10 51 969 5	A-BOCK AUFRICHTZYL HYDR
VERSCHRAUBUNG	7617460	635	2	448	11 89 300 5	VERROHRUNG HYDR
VERSCHRAUBUNG	7617460	626	2	528	10 51 959 1	VERROHRUNG HYDR
VERSCHRAUBUNG	7617461	673	3	24	11 29 618 6	OW HYDR
VERSCHRAUBUNG	7617461	600	1	85	10 51 969 5	A-BOCK AUFRICHTZYL HYDR
VERSCHRAUBUNG	7617461	633	3	448	11 89 300 5	VERROHRUNG HYDR
VERSCHRAUBUNG	7617461	623	2	528	10 51 959 1	VERROHRUNG HYDR
VERSCHRAUBUNG	7617461	700	2	661	10 51 971 2	SELBSTVERLADESYSTEM H
VERSCHRAUBUNG	7617494	678	2	24	11 29 618 6	OW HYDR
VERSCHRAUBUNG	7617494	303	1	95	11 24 773 5	AGGREGAT HYDR
VERSCHRAUBUNG	7621827	36	1	8	11 92 958 8	LUFTFUEHRUNG KPL
VERSCHRAUBUNG	7622060	712	2	486	11 26 260 6	WINDE 1 HYDR
VERSCHRAUBUNG	7622060	712	2	501	11 26 261 1	WINDE 2 HYDR
VERSCHRAUBUNG	790259414	612	1	620	10 51 726 2	VERROHRUNG HYDR
VERSCHRAUBUNG	790453814	614	1	22	11 29 618 6	OW HYDR
VERSCHRAUBUNG	790453814	648	3	95	11 24 773 5	AGGREGAT HYDR
VERSCHRAUBUNG KPL	11253240	900	1	121	90 74 418	REGELVENTIL
VERSTAERKUNGSPLATTE	10350084	11	4	523	99 34 198 14	SCHILD LIEBHERR
VERSTELLKOLBEN	10287733	1	1	179	10 28 766 5	VERSTELLTEIL
VERSTELLTEIL	10287665	2	1	177	11 21 593 6	PUMPENELEMENT
VERSTELLUNG	11219905	2	1	99	10 53 430 7	V.PUMPE
VERSTELLUNG	11224738	2	1	451	51 24 059 14	V.MOTOR
VERTEILERBLOCK	10151825	5	1	269	10 14 333 9	KRAFTSTOFFLEITUNGEN
VERTEILERGETRIEBE	11246820	1	1	94	11 24 773 5	AGGREGAT HYDR
VERZURRUNG BALLAST	992980314	13	1	338	99 23 386 14	BALLASTGEWICHT ANORD
VERZURRUNG OW	991804114	13	1	441	10 51 969 6	VERBINDUNG OW UW
VIDEOUEBERWACHUNGSANL	10580647	11	1	694	11 89 400 8	VIDEOUEBERWACHUNGSANL
VIDEOUEBERWACHUNGSANL	11894008	704	1	4	01 38 376 14	LR 1300 SX
VIERKANTROHR	10557117	5	1	666	11 23 619 7	SELBSTVERLADESYSTEM NR
VIERKANTROHR	11278507	1	1	585	11 28 357 6	MONTAGETEILE
VIERLIPPENDICHTUNG	10099037	1	24	35	10 52 459 5	DS
VIERLIPPENDICHTUNG	11301682	2	10	35	10 52 459 5	DS
VORREIBER	10581486	15	1	325	10 57 940 0	TUER
VORSCHLAGHAMMER 5000G	885040114	13	1	505	10 56 183 8	WERKZEUG
WAELZLAGER	10522848	3	1	599	79 03 862 14	LASTHAKEN
WAELZLAGER	10574043	3	1	604	11 27 463 8	AUFHAENGUNG
WAELZLAGER	11274832	3	1	610	11 27 480 1	AUFHAENGUNG
WAERMETAUSCHER	10446225	14	1	94	11 24 773 5	AGGREGAT HYDR
WAERMETAUSCHER	10512662	40	1	432	11 93 934 6	KLIMAANLAGE
WAERMETAUSCHER	11236707	1	1	706	11 21 750 0	VERFLUESSIGER
WARTUNGSSCHALTER	11060522	20	1	207	11 24 114 2	ANSAUGANLAGE LUFT
WASSERABLAUF KPL	10572149	250	1	432	11 93 934 6	KLIMAANLAGE
WASSERPUMPE MIT BEFEST.	10142734	370	1	224	12 42 545 4	DIESELMOTOR

Bezeichnung	Artikel	Pos.	Menge	Blatt	Baugruppe	Bezeichnung
WASSERPUMPE VORM.	11354498	1	1	283	10 14 273 4	WASSERPUMPE MIT BEFEST.
WASSERSAMMELLEITUNG	10146018	1	1	288	10 14 601 2	WASSERSAMMELLEITUNG K
WASSERSAMMELLEITUNG K	10146012	388	1	224	12 42 545 4	DIESELMOTOR
WASSERSCHLAUCH	11946459	350	1	432	11 93 934 6	KLIMAANLAGE
WASSERSONDE	10331335	13	1	215	10 30 300 7	KRAFTSTOFFVORFILTER
WASSERVENTIL	10584671	50	1	432	11 93 934 6	KLIMAANLAGE
WASSERVENTIL	11082158	12	2	217	11 24 114 5	ANLAGE HARNSTOFF EINBAU
WASSERVENTIL	592293114	51	1	432	11 93 934 6	KLIMAANLAGE
WASSERVENTIL	592293114	51	1	433	10 58 467 1	WASSERVENTIL
WASSERWAAGE	714000808	5	1	438	97 07 857 03	LIBELLE EINBAU
WASSERWAAGE	714000808	12	1	681	11 89 568 6	SELBSTVERLADESYSTEM NR
WECHSELFILTER	10297295	1	2	257	10 14 294 2	SCHMIEROELFILTER ANBAU
WECHSELVENTIL	10124239	4	1	153	10 14 131 6	ANSCHLUSSPLATTE VORM.
WECHSELVENTIL	10446566	14	1	455	11 22 473 8	VERSTELLUNG
WECHSELVENTIL	11067305	6	1	104	11 21 991 0	PUMPENGEHAEUSE
WECHSELVENTIL	11267447	1	1	110	11 06 730 5	WECHSELVENTIL
WECHSELVENTIL	11938600	2	3	34	10 35 148 6	VENTILBLOCK
WECHSELVENTIL	511491914	7	2	20	11 29 618 6	OW HYDR
WECHSELVENTIL	511491914	11	2	446	11 89 300 5	VERROHRUNG HYDR
WECHSLERRELAIS	11946464	370	1	432	11 93 934 6	KLIMAANLAGE
WECHSLERRELAIS	630121508	83	1	406	10 55 963 5	SCHALTSCHR X1
WEGESCHIEBER	10224607	2	1	678	11 89 408 3	VERROHRUNG HYDR
WEGESCHIEBER	510403414	14	4	446	11 89 300 5	VERROHRUNG HYDR
WEGEVENTIL	10540182	230	1	387	51 14 347 14	DW SICHERUNGSBLOCK
WEGEVENTIL	10591435	8	1	34	10 35 148 6	VENTILBLOCK
WEGEVENTIL	11223305	2	2	38	59 21 458 14	VENTILBLOCK
WEGEVENTIL	11229184	7	1	34	10 35 148 6	VENTILBLOCK
WEGEVENTIL	11233727	1	1	87	10 22 540 8	VENTILBLOCK
WEGEVENTIL	11286481	2	2	20	11 29 618 6	OW HYDR
WEGEVENTIL	510427214	6	2	34	10 35 148 6	VENTILBLOCK
WEGEVENTIL	510427214	5	1	620	10 51 726 2	VERROHRUNG HYDR
WEGEVENTIL	510429214	4	1	528	10 51 959 1	VERROHRUNG HYDR
WEGEVENTIL	511432714	11	5	20	11 29 618 6	OW HYDR
WEGEVENTIL	511432714	4	1	345	10 51 969 8	NADELEINZIEHWINDE HYDR
WEGEVENTIL	511432714	3	1	362	10 51 968 7	HAUPT EZW HYDR
WEGEVENTIL	511432714	10	1	715	10 56 173 5	VERROHRUNG HYDR
WEGEVENTIL	511480614	2	1	690	10 55 459 4	VERROHRUNG HYDR
WEGFAHRSPERRE	10663904	32	1	414	11 26 095 7	STEUERSTAND RE
WELLE	540272014	30	1	627	54 02 703 14	FLANSCH KPL
WELLENDICHTRING	10564158	14	1	346	51 22 527 14	OELMOTOR
WELLENDICHTRING	11950210	50	1	380	99 04 645 14	ANTRIEB
WELLENDICHTRING	7022315	2	1	393	11 94 020 8	VERSCHLUSSRING
WELLENDICHTRING	710069514	20	1	168	11 22 127 4	PUMPENELEMENT
WELLENDICHTRING	710069514	20	1	174	10 35 161 0	DS KPL
WELLENDICHTRING	7413402	20	1	177	11 21 593 6	PUMPENELEMENT
WELLENDICHTRING	790563914	10	1	451	51 24 059 14	V.MOTOR
WELLROHR	10227531	16	0.5	8	11 92 958 8	LUFTFUEHRUNG KPL
WELLROHR	10227531	71	6	218	11 24 114 5	ANLAGE HARNSTOFF EINBAU
WERKZEUG	10560228	1	1	505	10 56 183 8	WERKZEUG
WERKZEUG	10561838	1	1	504	10 56 187 5	WERKZEUGAUSRUESTUNG
WERKZEUGAUSRUESTUNG	10561875	50	1	2	01 38 376 14	LR 1300 SX
WERKZEUGKASTEN	790042514	2	1	505	10 56 183 8	WERKZEUG
WIEGE	11219922	2	1	100	11 21 990 2	TRIEBWERK
WINDE	10530398	10	1	484	11 26 260 5	WINDE 1 KRAN
WINDE	10530398	10	1	499	11 26 261 0	WINDE 2 KRAN
WINDE	10551563	10	1	361	10 51 968 6	EZW OW EINBAU KPL
WINDE	592069414	27	1	618	10 51 743 9	SEILEINZIEHWINDE KPL NRS
WINDE	969624801	10	1	343	10 51 969 7	NADELEINZIEHWINDE
WINDE 1 EL	11216342	3	1	484	11 26 260 5	WINDE 1 KRAN
WINDE 1 EL	11216342	3	1	499	11 26 261 0	WINDE 2 KRAN

Bezeichnung	Artikel	Pos.	Menge	Blatt	Baugruppe	Bezeichnung
WINDE 1 HYDR	11262606	2	1	484	11 26 260 5	WINDE 1 KRAN
WINDE 1 KRAN	11262605	41	1	2	01 38 376 14	LR 1300 SX
WINDE 2 HYDR	11262611	2	1	499	11 26 261 0	WINDE 2 KRAN
WINDE 2 KRAN	11262610	45	1	2	01 38 376 14	LR 1300 SX
WINDEN EINBAU	11220500	11	1	484	11 26 260 5	WINDE 1 KRAN
WINDEN EINBAU	11220501	11	1	499	11 26 261 0	WINDE 2 KRAN
WINDENBOCK	11893215	5	1	489	10 53 039 8	WINDE
WINDENGLEICHLAUF EL NRS	971460103	651	1	4	01 38 376 14	LR 1300 SX
WINDENRAHMEN	918678214	29	1	618	10 51 743 9	SEILEINZIEHWINDE KPL NRS
WINDENRAHMEN	969654301	20	1	349	96 96 248 01	WINDE
WINDGEBER	692815514	31	1	586	97 07 204 03	WINDMESSER EL NRS
WINDMESSER EL NRS	970720403	970	1	583	99 06 461 14	WINDMESSER KPL
WINDMESSER KPL	990646114	13	1	578	11 24 132 4	AL KOPF KPL
WINKEL	10563082	25	1	313	11 24 409 0	VERKLEIDUNG OW EINBAU KP
WINKEL	10574364	18	2	319	11 24 409 1	VERKLEIDUNG
WINKEL	11244498	53	1	315	11 24 409 0	VERKLEIDUNG OW EINBAU KP
WINKEL	11263757	18	1	188	11 24 113 8	MOTORLAGER KPL
WINKEL	11290852	230	1	98	11 24 682 0	VERTEILERGETRIEBE
WINKELANZEIGE	919058414	11	1	538	11 24 444 4	A-BOCK 1 KPL
WINKELANZEIGE	919058414	11	1	616	11 21 552 4	WINKELANZEIGE NRS
WINKELANZEIGE NRS	11215524	510	1	3	01 38 376 14	LR 1300 SX
WINKELGEBER	11286324	10	1	515	11 90 150 9	ANLENKSTUECK EL
WINKELGEBER	11286324	10	1	579	10 53 141 3	AL KOPF EL
WINKELSTUECK	592287714	17	1	426	59 22 871 14	FRONTSCHEIBE KPL
WINKELSTUECK	7412268	37	2	45	11 24 519 0	OW EL
WINKELVERSCHRAUBUNG	11268711	610	1	98	11 24 682 0	VERTEILERGETRIEBE
WINKELVERSCHRAUBUNG	592317014	600	1	98	11 24 682 0	VERTEILERGETRIEBE
WIPPE SCHWK	10533999	12	2	83	10 51 969 4	A-BOCK AUFRICHTZYL EINBA
WISCHARM	592287914	19	1	426	59 22 871 14	FRONTSCHEIBE KPL
WISCHARM	592288814	46	1	419	10 35 008 0	KABINE
WISCHERBLATT	592288014	20	1	426	59 22 871 14	FRONTSCHEIBE KPL
WISCHERBLATT	592288914	47	1	419	10 35 008 0	KABINE
WISCHERMOTOR	592287614	16	1	426	59 22 871 14	FRONTSCHEIBE KPL
WISCHERMOTOR	592288714	45	1	419	10 35 008 0	KABINE
WP	10223446	19	1	321	10 57 883 5	TUER
WP	10223447	3	1	321	10 57 883 5	TUER
WP	10223448	11	1	321	10 57 883 5	TUER
WP	10223449	16	1	321	10 57 883 5	TUER
WP	10336682	4	1	313	11 24 409 0	VERKLEIDUNG OW EINBAU KP
WP	10351547	7	7	317	11 24 409 1	VERKLEIDUNG
WP	10351548	8	1	317	11 24 409 1	VERKLEIDUNG
WP	10537566	3	1	439	10 53 756 0	LEUCHTENHALTER KPL
WP	10557223	13	2	647	10 55 601 0	STURZSICHERUNG NRS
WP	10572706	2	2	68	10 55 268 1	MITNEHMER EINBAU
WP	10573951	10	1	711	10 52 293 0	DW GEBER NRS
WP	10574631	2	1	498	10 57 462 9	BOLZEN KPL
WP	10575306	4	1	195	11 24 114 0	KUEHLER EINBAU WASSER
WP	10575307	5	1	195	11 24 114 0	KUEHLER EINBAU WASSER
WP	10575566	10	1	202	11 24 114 1	KUEHLER EINBAU LADELUFT
WP	10575567	11	1	202	11 24 114 1	KUEHLER EINBAU LADELUFT
WP	10577229	40	1	217	11 24 114 5	ANLAGE HARNSTOFF EINBAU
WP	10586253	50	1	77	10 58 163 4	KABINENAUFHAENGUNG KPL
WP	10599571	46	1	333	11 24 483 7	BEF-TEILE OW
WP	10599757	6	1	195	11 24 114 0	KUEHLER EINBAU WASSER
WP	10599758	7	1	195	11 24 114 0	KUEHLER EINBAU WASSER
WP	10599759	8	1	195	11 24 114 0	KUEHLER EINBAU WASSER
WP	10599854	49	1	333	11 24 483 7	BEF-TEILE OW
WP	11223086	1	1	614	11 22 322 6	MODEM KPL NRS
WP	11245760	4	4	636	11 24 575 5	PODEST
WP	11248432	10	1	211	11 24 114 3	ABGASANLAGE

Bezeichnung	Artikel	Pos.	Menge	Blatt	Baugruppe	Bezeichnung
WP	11248433	11	1	211	11 24 114 3	ABGASANLAGE
WP	11250985	3	1	205	11 28 574 7	WP
WP	11261002	5	2	193	11 24 113 9	ANBAUTEILE DIESELMOTOR
WP	11268967	10	1	659	11 26 901 8	HALTER KPL
WP	11279013	43	1	217	11 24 114 5	ANLAGE HARNSTOFF EINBAU
WP	11285709	4	1	205	11 28 574 7	WP
WP	11285747	3	1	202	11 24 114 1	KUEHLER EINBAU LADELUFT
WP	11309628	2	1	440	11 30 962 5	HALTER KPL
WP	11900503	9	1	711	10 52 293 0	DW GEBER NRS
WP	11929423	20	1	8	11 92 958 8	LUFTFUEHRUNG KPL
WP	11929596	21	1	8	11 92 958 8	LUFTFUEHRUNG KPL
WP	11930281	22	1	8	11 92 958 8	LUFTFUEHRUNG KPL
WP	11930759	23	1	8	11 92 958 8	LUFTFUEHRUNG KPL
WP	11931909	24	1	8	11 92 958 8	LUFTFUEHRUNG KPL
WP	289059414	13	1	443	11 89 364 8	UW KPL
WP	385031714	15	2	618	10 51 743 9	SEILEINZIEHWINDE KPL NRS
WP	949892214	20	1	361	10 51 968 6	EZW OW EINBAU KPL
WP	954373603	31	2	467	11 89 365 0	RAUPENTRAEGER RE KPL
WP	954373603	31	2	478	11 89 365 1	RAUPENTRAEGER LI KPL
WP	956033214	3	2	582	11 28 610 5	ARRETIERUNG KPL
WP	956067414	5	2	593	99 48 521 14	SPITZEN AL KPL
WP	956266614	1	1	540	91 90 584 14	WINKELANZEIGE
WP	956266714	2	1	540	91 90 584 14	WINKELANZEIGE
WP	956319314	30	4	593	99 48 521 14	SPITZEN AL KPL
WP	956810314	26	1	590	99 23 398 14	ROLLENSATZ
WP	959332514	90	1	511	11 23 820 3	ANLENKSTUECK KPL
WP	970831503	14	2	510	11 23 820 3	ANLENKSTUECK KPL
WP	970854303	16	2	581	11 28 629 9	MONTAGETEILE
WP	971323803	28	1	640	99 10 116 14	SEILFUEHRUNG
WP	971508203	11	1	593	99 48 521 14	SPITZEN AL KPL
ZAHNRAD	10121982	5	1	256	10 13 382 3	ABSAUGPUMPE VORM.
ZAHNRAD	10121983	4	1	256	10 13 382 3	ABSAUGPUMPE VORM.
ZAHNRAD	10133684	6	1	256	10 13 382 3	ABSAUGPUMPE VORM.
ZAHNRADPUMPE	512214414	10	1	94	11 24 773 5	AGGREGAT HYDR
ZAHNRADPUMPE	512249914	7	1	94	11 24 773 5	AGGREGAT HYDR
ZAHNWELLE	790346614	120	1	98	11 24 682 0	VERTEILERGETRIEBE
ZEITRELAIS	630170014	85	1	406	10 55 963 5	SCHALTSCHR X1
ZELLGUMMI	262107814	24	6	79	10 56 067 3	BATTERIE EINBAU KPL
ZENTRALAGGREGAT	11240480	10	1	90	11 26 560 6	AGGREGAT DIESELMOTOR
ZENTRALAGGREGAT EL	11244487	3	1	92	11 24 048 0	ZENTRALAGGREGAT
ZENTRALBALLAST KPL	11248120	37	1	2	01 38 376 14	LR 1300 SX
ZENTRALBALLAST SCHWK	11242597	10	4	481	11 24 812 0	ZENTRALBALLAST KPL
ZENTRALSCHMIERPUMPE	11223123	12	1	70	11 27 315 5	ZENTRALSCHMIERUNG
ZENTRALSCHMIERUNG	11273155	23	1	18	11 24 047 9	OW KPL
ZUENDSTARTSCHALTER	740732003	31	1	414	11 26 095 7	STEUERSTAND RE
ZUGFEDER	7617520	51	2	436	10 28 999 3	SCHWINGSYSTEM
ZUGSTANGE	540272114	31	1	627	54 02 703 14	FLANSCH KPL
ZURRGURT	10020519	8	1	345	10 51 969 8	NADELEINZIEHWINDE HYDR
ZURRGURT	10020520	10	1	653	11 30 567 0	TRANSPORTSICHERUNG
ZURRGURT	7621780	7	1	345	10 51 969 8	NADELEINZIEHWINDE HYDR
ZURRGURT	7621780	14	1	659	11 26 901 8	HALTER KPL
ZUSATZBALLAST	10349439	12	6	339	99 27 572 14	GRUNDPLATTE KPL
ZUSATZBALLAST	10349440	11	8	339	99 27 572 14	GRUNDPLATTE KPL
ZWEILOCHMUTTER AL	11005554	17	1	215	10 30 300 7	KRAFTSTOFFVORFILTER
ZWISCHENABSPANNUNG NR	970599703	619	1	3	01 38 376 14	LR 1300 SX
ZWISCHENABSPANNUNG NR	992340514	616	1	3	01 38 376 14	LR 1300 SX
ZWISCHENABSPANNUNG NR	992342014	617	1	3	01 38 376 14	LR 1300 SX
ZWISCHENFLANSCH SAE	510710614	10	4	446	11 89 300 5	VERROHRUNG HYDR
ZWISCHENPLATTE	511495814	20	1	20	11 29 618 6	OW HYDR
ZWISCHENRAD KPL.	9072906	331	1	224	12 42 545 4	DIESELMOTOR

Bezeichnung	Artikel	Pos.	Menge	Blatt	Baugruppe	Bezeichnung
ZWISCHENRAD VORM.	9072633	14	1	256	10 13 382 3	ABSAUGPUMPE VORM.
ZWISCHENRAD VORM.	9072904	1	1	279	90 72 906	ZWISCHENRAD KPL.
ZWISCHENRADACHSE	9072907	2	1	279	90 72 906	ZWISCHENRAD KPL.
ZWISCHENSTUECK	10132935	16	1	270	10 14 588 5	LECKOELRUECKLAUF
ZWISCHENSTUECK	956009714	10	1	333	11 24 483 7	BEF-TEILE OW
ZWISCHENSTUECK	956009714	35	2	510	11 23 820 3	ANLENKSTUECK KPL
ZWISCHENSTUECK	956009714	11	2	551	11 28 725 5	SEILSCHUTZ KPL
ZWISCHENSTUECK MONTAGE	11245705	67	1	2	01 38 376 14	LR 1300 SX
ZWISCHENSTUECK MONTAGE	11245711	71	1	2	01 38 376 14	LR 1300 SX
ZWISCHENSTUECK MONTAGE	11245717	79	4	2	01 38 376 14	LR 1300 SX
ZWISCHENWELLE	944405903	70	1	471	96 93 178 01	FAHRANTRIEB
ZWOELFKANTSCHRAUBE M10	10132558	4	4	292	10 14 013 6	ATL-ANBAU
ZYL	592138514	1	1	716	51 03 361 14	EINFACHWIRKZYL
ZYL KOPF ANBAU	10131768	80	6	223	12 42 545 4	DIESELMOTOR
ZYL ROLLENLAGER	10573892	2	1	602	10 50 435 2	SEILROLLE
ZYL ROLLENLAGER	11490216	34	2	150	10 14 360 7	RS SCHWENKLAGER
ZYL ROLLENLAGER	7382149	34	1	127	90 77 464	RS FLANSCH
ZYL ROLLENLAGER	761001103	72	1	471	96 93 178 01	FAHRANTRIEB
ZYL ROLLENLAGER	7610021	12	1	471	96 93 178 01	FAHRANTRIEB
ZYL SCHLOSS	592289714	3	1	427	59 22 895 14	KLAPPE KPL
ZYL VERSCHLUSS	10542435	1	1	412	38 50 944 14	SCHALTERGEHAEUSE
ZYLINDER	10007948	1	1	453	10 00 794 7	TRIEBWERK HYDRAULIKTEIL
ZYLINDER	10154458	80	6	226	11 38 961 7	KURBELGEHAEUSE KPL. MIT
ZYLINDER	10324901	2	1	170	10 32 489 2	TRIEBWERK
ZYLINDER	7023838	1	1	390	11 94 017 6	TRIEBWERK HYDRAULIKTEIL
ZYLINDER	7024273	111	1	621	51 02 322 14	OELMOTOR
ZYLINDER MIT BUCHSE	9075894	1	1	131	98 89 833	RS ZYLINDER+STEUERPLATT
ZYLINDERBUCHSE	10153973	1	1	227	10 15 445 8	ZYLINDER
ZYLINDERKOPF VORM.	10145864	1	1	244	10 13 176 8	ZYL KOPF ANBAU
ZYLINDERKOPFDECKEL	10134695	1	1	250	10 13 469 6	ZYLINDERKOPFDECKEL ANBA
ZYLINDERKOPFDECKEL	10134698	1	1	248	10 12 653 5	ZYLINDERKOPFDECKEL ANBA
ZYLINDERKOPFDECKEL	10134750	1	1	247	10 13 475 1	ZYLINDERKOPFDECKEL ANBA
ZYLINDERKOPFDECKEL ANBA	10126535	83	1	223	12 42 545 4	DIESELMOTOR
ZYLINDERKOPFDECKEL ANBA	10134696	84	2	223	12 42 545 4	DIESELMOTOR
ZYLINDERKOPFDECKEL ANBA	10134751	82	3	223	12 42 545 4	DIESELMOTOR
ZYLINDERKOPFDICHTUNG	10133667	2	1	244	10 13 176 8	ZYL KOPF ANBAU
ZYLINDERNADELLAGER	7469905	64	2	119	10 11 835 7	RS ANSCHLUSSGEHAEUSE
ZYLINDERNADELLAGER	7469905	32	1	135	98 84 402	RS WELLE
ZYLINDERROLLE		17	114	352	93 88 497 01	PLANETENGETRIEBE
ZYLINDERROLLENLAGER	7380070	33	1	148	10 13 802 7	RS WELLE
ZYLINDERROLLENLAGER	7380106	33	1	135	98 84 402	RS WELLE
ZYLINDERROLLENLAGER	746310401	5	2	474	94 44 065 03	PLANETENRAD
ZYLINDERROLLENLAGER	746413001	5	2	473	94 44 048 03	PLANETENRAD
ZYLINDERROLLENLAGER	746506601	5	2	472	94 44 043 03	PLANETENRAD
ZYLINDERSCHRAUBE	11215951	3	4	171	10 35 160 3	STEUERVENTIL
ZYLINDERSCHRAUBE	11215951	3	4	180	10 11 497 5	STEUERVENTIL
ZYLINDERSCHRAUBE	11217079	5	3	102	11 21 992 7	DECKEL
ZYLINDERSCHRAUBE	11217079	5	3	103	11 21 992 9	DECKEL
ZYLINDERSCHRAUBE	11219373	4	8	112	11 21 935 0	PUMPENDECKEL
ZYLINDERSCHRAUBE	11219936	11	8	114	11 21 991 8	LAGERFLANSCH
ZYLINDERSCHRAUBE	11220320	20	2	455	11 22 473 8	VERSTELLUNG
ZYLINDERSCHRAUBE	11220320	21	2	455	11 22 473 8	VERSTELLUNG
ZYLINDERSCHRAUBE	11224767	22	4	455	11 22 473 8	VERSTELLUNG
ZYLINDERSCHRAUBE	11913116	3	1	110	11 06 730 5	WECHSELVENTIL
ZYLINDERSCHRAUBE DIN 691	4980750	46	1	126	10 13 975 2	RS SCHWENKJOCH
ZYLINDERSCHRAUBE DIN 69	407203008	65	4	191	10 57 532 2	ANSAUGROHR OEL KPL
ZYLINDERSCHRAUBE DIN 691	240217402	22	6	127	90 77 464	RS FLANSCH
ZYLINDERSCHRAUBE DIN 798	4072083	61	32	60	10 56 070 1	TANK HYDR KPL
ZYLINDERSCHRAUBE DIN 79	408301208	7	8	418	11 22 369 1	FUSSPEDAL EL EINBAU
ZYLINDERSCHRAUBE DIN 912	11226139	190	4	387	51 14 347 14	DW SICHERUNGSBLOCK

Bezeichnung	Artikel	Pos.	Menge	Blatt	Baugruppe	Bezeichnung
ZYLINDERSCHRAUBE DIN 912	10336668	8	30	467	11 89 365 0	RAUPENTRAEGER RE KPL
ZYLINDERSCHRAUBE DIN 912	10336668	8	30	478	11 89 365 1	RAUPENTRAEGER LI KPL
ZYLINDERSCHRAUBE DIN 912	11226137	180	4	387	51 14 347 14	DW SICHERUNGSBLOCK
ZYLINDERSCHRAUBE ISO 145	11600879	4	1	262	10 15 315 1	DRUCKROHRSTUTZEN
ZYLINDERSCHRAUBE ISO 145	11600879	3	1	263	10 14 114 0	RS DRUCKROHRSTUTZEN
ZYLINDERSCHRAUBE ISO 145	11600879	3	1	266	10 13 543 4	BEFESTIGUNG DRUCKROHR
ZYLINDERSCHRAUBE ISO 145	4981218	43	8	119	10 11 835 7	RS ANSCHLUSSGEHAEUSE
ZYLINDERSCHRAUBE ISO 145	4981218	43	4	131	98 89 833	RS ZYLINDER+STEUERPLATT
ZYLINDERSCHRAUBE ISO 145	4981218	43	4	134	98 89 832	RS ZYLINDER+STEUERPLATT
ZYLINDERSCHRAUBE ISO 145	11082116	3	1	261	10 15 286 7	INJEKTOR MIT BEFEST.
ZYLINDERSCHRAUBE ISO 145	11082116	2	1	265	10 13 543 2	BEFESTIGUNG INJEKTOR
ZYLINDERSCHRAUBE ISO 476	10539513	86	12	396	90 01 376 2	DREHWERKANTRIEB
ZYLINDERSCHRAUBE ISO 47		71	12	352	93 88 497 01	PLANETENGETRIEBE
ZYLINDERSCHRAUBE ISO 47	4002442	82	12	471	96 93 178 01	FAHRANTRIEB
ZYLINDERSCHRAUBE ISO 47	4002442	303	2	668	10 51 973 8	SELBSTVERLADESYSTEM H
ZYLINDERSCHRAUBE ISO 47	4043014	300	2	668	10 51 973 8	SELBSTVERLADESYSTEM H
ZYLINDERSCHRAUBE ISO 47	404208814	19	6	350	93 88 500 01	SEILTROMMEL
ZYLINDERSCHRAUBE ISO 47	404208814	21	8	626	54 02 702 14	SEILTROMMEL KPL
ZYLINDERSCHRAUBE ISO 476	4043124	60	4	94	11 24 773 5	AGGREGAT HYDR
ZYLINDERSCHRAUBE ISO 476	4043124	17	12	471	96 93 178 01	FAHRANTRIEB
ZYLINDERSCHRAUBE ISO 47		52	12	352	93 88 497 01	PLANETENGETRIEBE
ZYLINDERSCHRAUBE ISO 47	404208514	430	58	98	11 24 682 0	VERTEILERGETRIEBE
ZYLINDERSCHRAUBE ISO 47	404208514	7	6	388	51 22 991 14	OELMOTOR
ZYLINDERSCHRAUBE ISO 476	11651481	120	4	30	11 28 647 6	VENTILBLOCK
ZYLINDERSCHRAUBE ISO 476	4900981	62	24	471	96 93 178 01	FAHRANTRIEB
ZYLINDERSCHRAUBE ISO 47		56	12	352	93 88 497 01	PLANETENGETRIEBE
ZYLINDERSCHRAUBE ISO 476	4001622	61	12	193	11 24 113 9	ANBAUTEILE DIESELMOTOR
ZYLINDERSCHRAUBE ISO 476	4001622	2	4	258	10 15 085 7	HOCHDRUCKPUMPE MIT BEFE
ZYLINDERSCHRAUBE ISO 476	4001622	2	4	259	10 15 074 3	RS HOCHDRUCKPUMPE
ZYLINDERSCHRAUBE ISO 476	4001622	65	4	581	11 28 629 9	MONTAGETEILE
ZYLINDERSCHRAUBE ISO 47	10527561	74	12	396	90 01 376 2	DREHWERKANTRIEB
ZYLINDERSCHRAUBE ISO 47	10539505	86	4	218	11 24 114 5	ANLAGE HARNSTOFF EINBAU
ZYLINDERSCHRAUBE ISO 47	10539505	15	8	340	10 52 656 0	MONTAGETEILE
ZYLINDERSCHRAUBE ISO 476	4630200	63	4	60	10 56 070 1	TANK HYDR KPL
ZYLINDERSCHRAUBE ISO 476	4630200	8	8	385	10 55 216 1	VERROHRUNG HYDR
ZYLINDERSCHRAUBE ISO 476	4630200	11	15	471	96 93 178 01	FAHRANTRIEB
ZYLINDERSCHRAUBE ISO 476	4043133	53	4	94	11 24 773 5	AGGREGAT HYDR
ZYLINDERSCHRAUBE ISO 476	4900980	66	4	581	11 28 629 9	MONTAGETEILE
ZYLINDERSCHRAUBE ISO 476	4900980	302	2	668	10 51 973 8	SELBSTVERLADESYSTEM H
ZYLINDERSCHRAUBE ISO 47	10539508	22	6	626	54 02 702 14	SEILTROMMEL KPL
ZYLINDERSCHRAUBE ISO 47	10539510	60	3	718	11 31 446 3	LADELUFTROHR KPL
ZYLINDERSCHRAUBE ISO 47	4600385	62	8	192	10 58 017 0	RUECKLAUFROHR
ZYLINDERSCHRAUBE ISO 47	4600385	5	2	245	10 14 843 8	KIPPHEBELBOCK KPL.
ZYLINDERSCHRAUBE ISO 47	4600385	7	15	299	10 11 557 7	SCHWUNGRADGEHAEUSE AN
ZYLINDERSCHRAUBE ISO 47	404313401	58	4	20	11 29 618 6	OW HYDR
ZYLINDERSCHRAUBE ISO 476	10539530	22	12	380	99 04 645 14	ANTRIEB
ZYLINDERSCHRAUBE ISO 47	4980938	20	2	123	10 13 333 4	DECKEL
ZYLINDERSCHRAUBE ISO 476	4043163	21	8	115	10 11 834 9	DOPPELV.PUMPE
ZYLINDERSCHRAUBE ISO 476	4980947	20	2	161	10 12 987 4	DURCHTRIEB
ZYLINDERSCHRAUBE ISO 47	485555314	12	2	79	10 56 067 3	BATTERIE EINBAU KPL
ZYLINDERSCHRAUBE ISO 476	4043003	30	8	361	10 51 968 6	EZW OW EINBAU KPL
ZYLINDERSCHRAUBE ISO 476	4980012	6	2	299	10 11 557 7	SCHWUNGRADGEHAEUSE AN
ZYLINDERSCHRAUBE ISO 47		77	8	352	93 88 497 01	PLANETENGETRIEBE
ZYLINDERSCHRAUBE ISO 47	10337130	20	8	380	99 04 645 14	ANTRIEB
ZYLINDERSCHRAUBE ISO 476	10012659	23	8	115	10 11 834 9	DOPPELV.PUMPE
ZYLINDERSCHRAUBE ISO 476	4000784	26	8	396	90 01 376 2	DREHWERKANTRIEB
ZYLINDERSCHRAUBE ISO 47	10539520	6	3	350	93 88 500 01	SEILTROMMEL
ZYLINDERSCHRAUBE ISO 476	4901067	56	16	20	11 29 618 6	OW HYDR
ZYLINDERSCHRAUBE ISO 476	4600505	57	8	20	11 29 618 6	OW HYDR
ZYLINDERSCHRAUBE ISO 47	10539524	29	1	77	10 58 163 4	KABINENAUFHAENGUNG KPL

Bezeichnung	Artikel	Pos.	Menge	Blatt	Baugruppe	Bezeichnung
ZYLINDERSCHRAUBE ISO 476	4600513	20	4	162	10 13 000 5	DURCHTRIEB
ZYLINDERSCHRAUBE ISO 476	4600513	20	4	163	10 13 235 7	ANBAUSATZ DURCHTRIEB
ZYLINDERSCHRAUBE ISO 476	4600513	20	4	164	10 13 452 1	DURCHTRIEB
ZYLINDERSCHRAUBE ISO 476	4600513	20	4	165	10 13 806 8	DURCHTRIEB
ZYLINDERSCHRAUBE ISO 476	10544044	751	4	486	11 26 260 6	WINDE 1 HYDR
ZYLINDERSCHRAUBE ISO 476	10544050	18	16	446	11 89 300 5	VERROHRUNG HYDR
ZYLINDERSCHRAUBE ISO 47		21	24	352	93 88 497 01	PLANETENGETRIEBE
ZYLINDERSCHRAUBE ISO 476	10544065	26	8	77	10 58 163 4	KABINENAUFHAENGUNG KPL
ZYLINDERSCHRAUBE ISO 476	10544068	63	4	191	10 57 532 2	ANSAUGROHR OEL KPL
ZYLINDERSCHRAUBE ISO 47	10530200	440	12	98	11 24 682 0	VERTEILERGETRIEBE
ZYLINDERSCHRAUBE ISO 476	10544072	12	6	350	93 88 500 01	SEILTROMMEL
ZYLINDERSCHRAUBE ISO 476	10017870	25	4	153	10 14 131 6	ANSCHLUSSPLATTE VORM.
ZYLINDERSCHRAUBE ISO 476	10191905	6	24	349	96 96 248 01	WINDE
ZYLINDERSCHRAUBE ISO 476	10191905	11	18	350	93 88 500 01	SEILTROMMEL
ZYLINDERSCHRAUBE ISO 47	10544105	12	48	382	10 51 968 2	DW OW
ZYLINDERSCHRAUBE ISO 476	10544092	63	4	94	11 24 773 5	AGGREGAT HYDR
ZYLINDERSCHRAUBE ISO 476	10544093	62	4	94	11 24 773 5	AGGREGAT HYDR
ZYLINDERSCHRAUBE ISO 47	10544121	17	8	660	10 51 971 3	SELBSTVERLADESYSTEM NR
ZYLINDERSCHRAUBE ISO 476	10544113	16	8	660	10 51 971 3	SELBSTVERLADESYSTEM NR
ZYLINDERSCHRAUBE ISO 47	10228541	20	2	142	10 12 942 0	DRUCKREDUZIERVENTIL
ZYLINDERSCHRAUBE ISO 476	10539448	57	12	51	10 56 645 8	KLEMMKASTEN
ZYLINDERSCHRAUBE ISO 476	10278936	6	40	81	10 56 069 4	MODULE EINBAU
ZYLINDERSCHRAUBE ISO 47	404214114	10	4	80	11 31 093 2	ENDSCHALTER EINBAU
ZYLINDERSCHRAUBE ISO 476	10539454	26	4	581	11 28 629 9	MONTAGETEILE
ZYLINDERSCHRAUBE ISO 476	10539454	9	8	582	11 28 610 5	ARRETIERUNG KPL
ZYLINDERSCHRAUBE ISO 47	4600552	59	28	20	11 29 618 6	OW HYDR
ZYLINDERSCHRAUBE ISO 47	4600552	41	4	715	10 56 173 5	VERROHRUNG HYDR
ZYLINDERSCHRAUBE ISO 476	10539462	74	4	137	92 73 187	RS MAGNET
ZYLINDERSCHRAUBE ISO 47	404302914	6	1	345	10 51 969 8	NADELEINZIEHWINDE HYDR
ZYLINDERSCHRAUBE ISO 47	404302914	7	4	362	10 51 968 7	HAUPT EZW HYDR
ZYLINDERSCHRAUBE ISO 476	10539467	28	2	538	11 24 444 4	A-BOCK 1 KPL
ZYLINDERSCHRAUBE ISO 476	404203514	13	4	528	10 51 959 1	VERROHRUNG HYDR
ZYLINDERSCHRAUBE ISO 476	10446871	47	6	467	11 89 365 0	RAUPENTRAEGER RE KPL
ZYLINDERSCHRAUBE ISO 476	10446871	47	6	478	11 89 365 1	RAUPENTRAEGER LI KPL
ZYLINDERSCHRAUBE ISO 476	11233296	135	2	30	11 28 647 6	VENTILBLOCK
ZYLINDERSCHRAUBE ISO 476	404250914	3	1	302	10 12 797 9	VERSCHLUSSTEILE
ZYLINDERSCHRAUBE ISO 476	404250914	51	3	627	54 02 703 14	FLANSCH KPL
ZYLINDERSCHRAUBE ISO 476	404251014	60	3	195	11 24 114 0	KUEHLER EINBAU WASSER
ZYLINDERSCHRAUBE ISO 476	404251014	91	4	511	11 23 820 3	ANLENKSTUECK KPL
ZYLINDERSCHRAUBE ISO 476	11233404	155	2	30	11 28 647 6	VENTILBLOCK
ZYLINDERSCHRAUBE ISO 476	404251414	61	6	195	11 24 114 0	KUEHLER EINBAU WASSER
ZYLINDERSCHRAUBE ISO 476	11233402	154	16	30	11 28 647 6	VENTILBLOCK
ZYLINDERSCHRAUBE ISO 47	11233401	153	10	30	11 28 647 6	VENTILBLOCK
ZYLINDERSCHRAUBE ISO 47	10539466	5	1	540	91 90 584 14	WINKELANZEIGE
ZYLINDERSCHRAUBE ISO 476	10219869	22	4	150	10 14 360 7	RS SCHWENKLAGER
ZYLINDERSCHRAUBE ISO 476	10539483	40	8	315	11 24 409 0	VERKLEIDUNG OW EINBAU KP
ZYLINDERSCHRAUBE ISO 476	10539483	9	4	415	91 65 251 14	KABELDURCHFUEHRUNG KAB
ZYLINDERSCHRAUBE ISO 47	4043082	14	2	292	10 14 013 6	ATL-ANBAU
ZYLINDERSCHRAUBE ISO 476	404206414	31	12	402	11 27 970 6	KABINE KPL
ZYLINDERSCHRAUBE ISO 476	485556314	23	4	626	54 02 702 14	SEILTROMMEL KPL
ZYLINDERSCHRAUBE ISO 476	404206614	8	4	704	11 22 037 2	FUSSPEDAL EL EINBAU
ZYLINDERSCHRAUBE ISO 47	4980920	21	8	157	10 12 226 2	RS VERSTELLUNG
ZYLINDERSCHRAUBE ISO 47	4980840	20	4	121	90 74 418	REGELVENTIL
ZYLINDERSCHRAUBE ISO 476	10539485	18	6	629	54 02 705 14	ANTRIEB KPL
ZYLINDERSCHRAUBE ISO 476	10539486	50	1	627	54 02 703 14	FLANSCH KPL
ZYLINDERSCHRAUBE ISO 476	10539488	25	4	361	10 51 968 6	EZW OW EINBAU KPL
ZYLINDERSCHRAUBE ISO 47	11170484	26	2	153	10 14 131 6	ANSCHLUSSPLATTE VORM.
ZYLINDERSCHRAUBE ISO 47	11170484	26	2	159	10 13 803 4	DS ANSCHLUSSPLATTE
ZYLINDERSCHRAUBE ISO 476	10539492	62	2	8	11 92 958 8	LUFTFUEHRUNG KPL
ZYLINDERSCHRAUBE ISO 476	10539492	23	2	552	11 28 390 8	AL BEGEHUNG

Bezeichnung	Artikel	Pos.	Menge	Blatt	Baugruppe	Bezeichnung
ZYLINDERSCHRAUBE ISO 476	10539492	23	2	568	11 28 583 8	AL BEGEHUNG
ZYLINDERSCHRAUBE ISO 476	10539492	23	2	575	11 28 626 1	AL BEGEHUNG
ZYLINDERSCHRAUBE ISO 476	10514797	17	6	629	54 02 705 14	ANTRIEB KPL
ZYLINDERSCHRAUBE ISO 476	10539496	2	2	652	11 23 827 7	SEILSCHUTZ
ZYLINDERSCHRAUBE ISO 47	404333614	61	12	94	11 24 773 5	AGGREGAT HYDR
ZYLINDERSCHRAUBE M10X30	10355735	27	4	177	11 21 593 6	PUMPENELEMENT
ZYLINDERSCHRAUBE M5X55	11219069	5	2	214	10 55 091 1	KRAFTSTOFFVORFILTER AN
ZYLINDERSCHRAUBE UN 120	10225045	4	4	47	10 53 048 9	SICHERUNGSHALTER
ZYLINDERSTIFT	10598777	23	2	455	11 22 473 8	VERSTELLUNG
ZYLINDERSTIFT	11903905	5	1	388	51 22 991 14	OELMOTOR
ZYLINDERSTIFT 8M6X24 ST 2	10011777	9	2	256	10 13 382 3	ABSAUGPUMPE VORM.
ZYLINDERSTIFT ISO 2338 6M	570948608	33	1	177	11 21 593 6	PUMPENELEMENT
ZYLINDERSTIFT ISO 8734 10M	4981077	22	2	145	10 12 224 8	RS ZUSATZTEILE
ZYLINDERSTIFT ISO 8734 4M	4901104	8	1	256	10 13 382 3	ABSAUGPUMPE VORM.
ZYLINDERSTIFT ISO 8734 5M	4980046	44	2	119	10 11 835 7	RS ANSCHLUSSGEHAEUSE
ZYLINDERSTIFT ISO 8734 6M	4980000	3	1	255	10 13 394 7	ABSAUGPUMPE MIT BEFEST.