Operating manual

en

Model:

LR 1300 SX

Serial number:

138281

001 - 15.07.2015

LIEBHERR

Product ID

Commercial name:	Crawler Crane
Type:	LR 1006.01.06
Model/Version:	V03.01

Document ID

	ORIGINAL OPERATOR'S MANUAL
Author:	LWN / Technical Publication Department
Issued:	2015-06-03

Manufacturer

Liebherr-Werk Nenzing GmbH
P.O. Box 10
6710 Nenzing
Austria

LWN/LR.x/V03.01//Auslieferung/2015-06-03/en

copyright by
LIEBHERR

Foreword

The name **Liebherr** doesn't just stand for products and services. It has become a byword for ideas and innovations. For progress which has proved its worth in the marketplace.

We constantly strive to extend and improve our diverse range of products and services. This requires ongoing cooperation and sharing of experience with our customers and business partners throughout the world. We are therefore grateful for any ideas and suggestions for improvements.

Inform Liebherr customer service if the machine is sold or bought by a previous owner.

Please contact:

Liebherr-Werk Nenzing GmbH

Postfach 10

Dr. Hans Liebherr Strasse 1

6710 Nenzing

Austria / Europe

Tel: +43 50809 41-0

Fax: +43 50809 41-500

E-mail: info.lwn@liebherr.com

LWN/LR.x/V03.01//Auslieferung/2015-06-03/en

copyright by
LIEBHERR

LWN/LR.x/V03.01//Auslieferung/2015-06-03/en

copyright by
LIEBHERR

Notes regarding the documentation

Using the documentation

The documentation supplied with the machine is designed to enable you to:
– operate the machine safely,
– use it in all permissible situations,
– carry out routine maintenance.

To do this, you will need to be able to find your way around the documentation, which is in several parts.

The documentation consists of:

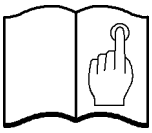

Operation manual

This contains information on starting, operating and maintaining the machine.

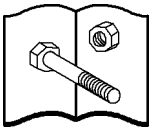

Spare parts catalog

This contains information on procuring spare parts.

Technical information

This contains information about the electrical and hydraulic systems of the machine.

Load charts

This contains all the valid load charts for all machine setup options.

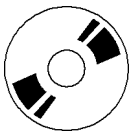

All the documentation can be found on the CD-ROM. The symbols printed on the CDs provide information on their contents.

Minimum requirements for using the CD-ROMs

Hardware:
– Intel® Pentium II® 500 MHz
– 128 MB RAM memory
– CD-ROM drive
– 800 x 600 pixel resolution, high color

Software:
– Windows 2000, XP
– Internet Explorer 5.5
– Acrobat Reader 7.0

Popup blockers may not be activated when working with Liebherr Parts. Note that the popup blocker functionality may be a part of certain web browsers and in

LWN/LR.x/V03.01//Auslieferung/2015-06-03/en

copyright by LIEBHERR

personal firewalls (software firewalls). The popup blocker functionality can usually be deactivated via the options in the respective program.

Latest version of the documentation

The delivered documentation is compiled solely for the listed serial number and can thus **not** be transferred onto other machines of the same series.

To ensure the documentation is always complete and up to date:
- Do not remove individual documents.
- Replace any missing, unreadable pages by reprinting them from the CD-ROM or request them from Liebherr after sales service.
- Insert immediately new documents supplied as a result of modifications.
- Replace amended documents and destroy the old version (particularly in the case of load charts).
- Always replace CD ROM with updated version, for example from the change documentation.
- With multilingual documents, always update **all languages**.

Storage of documentation

The **operation manual** must always be kept ready at hand in the cabin.

The currently required **load charts** must be kept in the cabin. These can be printed out from the CD-ROM.

The **spare parts catalogue** and the **technical information** must be available to the maintenance and service personnel as required.

Structure of the operating manual

The operating manual is made up of individual, serially numbered chapters.

The table of contents shows how the individual chapters are structured.

The documentation is supplied in paper form in a ring binder and in electronic form on a CD-ROM.

Display conventions

Numerical values and units

This machine was designed and built according to the metric system of units. Numerical values within the imperial system of units are converted and rounded.

Symbols

Symbol	Meaning
*	Optional additional equipment
☐	Requirement must be met
▶	Performing an action

LWN/LR.x/V03.01//Auslieferung/2015-06-03/en

copyright by LIEBHERR

Symbol	Meaning
▷	Consequence of an action
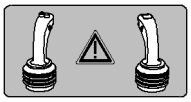	Specific characteristics or procedures on a machine with two multi-directional control levers
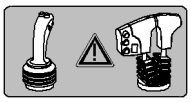	Specific characteristics or procedures on a machine with a multi-directional control lever and a double T-lever

Symbols

Symbols in illustrations

Symbol	Meaning
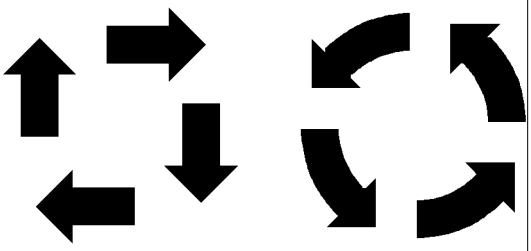	Actions
❶❷❸❹❺❻❼❽❾❿	Imperative sequence of multiple actions in an illustration
ⒶⒷⒸⒹⒺ	Random sequence of multiple actions in an illustration
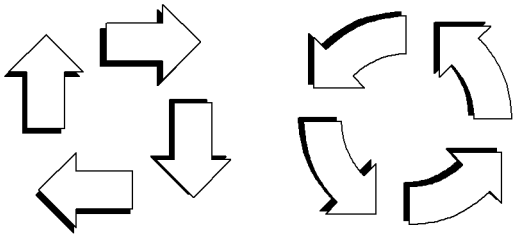	Consequences of actions
①②③④⑤⑥⑦⑧⑨⑩	Consequences of actions with imperative sequence
ⒶⒷⒸⒹⒺ	Consequences of actions with random sequence
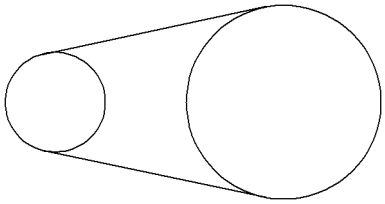	Exact enlargement of an area

LWN/LR.x/V03.01//Auslieferung/2015-06-03/en

copyright by LIEBHERR

Symbol	Meaning
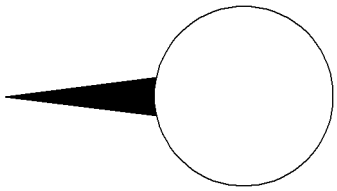	Enlargement of an area or a component in the same perspective as in the illustration
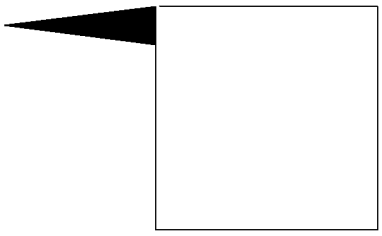	Enlargement of an area or a component in a different perspective as in the illustration

Symbols in illustrations

Markings on warning signs

All warning signs in this operation manual conform to norm according to ANSI Z535.6.

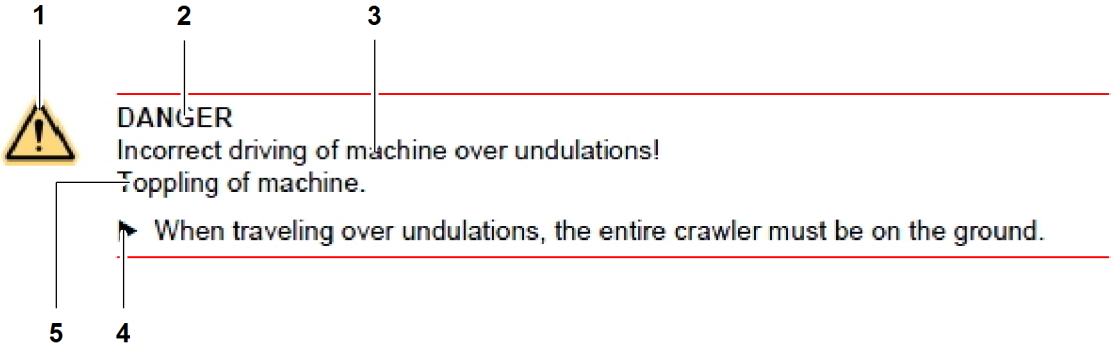

Name		Description
1	Warning signs	Warns of possible injuries
2	Signal word	For further information see: Signal words
3	Danger source	Explanation of danger (contexts)
4	Measures	Measures to prevent the danger
5	Consequences of the danger	Consequences in case of non-observance and possibly additional information required for comprehension

Labelling of the warning notices

LWN/LR.x/V03.01//Auslieferung/2015-06-03/en

copyright by LIEBHERR

Signal words

DANGER
Denotes an immediate dangerous situation which will result in death or serious injury if it is not avoided.

▶ Refers to action to reduce or avoid the danger(s).

WARNING
Denotes a dangerous situation which could result in death or serious injury if it is not avoided.

▶ Refers to action to reduce or avoid the danger(s).

CAUTION
Denotes a dangerous situation which could result in minor or moderate injury if it is not avoided.

▶ Refers to action to reduce or avoid the danger(s).

NOTICE
Denotes a dangerous situation which could result in material damage if it is not avoided.

▶ Refers to action to reduce or avoid the danger(s).

Additional markings

Note
Denotes useful tips and hints.

▶ Refers to the current action and demonstrates how to perform tasks in a straightforward manner.

Publisher's imprint

Version

In the interest of our customers, we reserve the right to make changes in line with technical developments. This documentation therefore corresponds to the technical situation at the time of delivery of the machine, and not to the current state of development at the manufacturer.

Copyright notice

Litronic is a registered trademark of Liebherr.

The documentation is protected by copyright. The copying and duplication of load charts in connection with the operational planning and use of the machine is expressly permitted. Otherwise, the documentation may not be duplicated, reproduced, microfilmed, translated or converted for storage and processing in computer systems, either wholly or partially, without the written consent of Liebherr-Werk Nenzing GmbH.

© Copyright by

Liebherr-Werk Nenzing GmbH

6710 Nenzing / Austria

LWN/LR.x/V03.01//Auslieferung/2015-06-03/en

All rights reserved.

LWN/LR.x/V03.01//Auslieferung/2015-06-03/en

copyright by
LIEBHERR

Technical terms and abbreviations

List of abbreviations

Abbreviation	Technical term
AGR	Abgasrückführung
ANSI	American National Standards Institute
ASME	American Society of Mechanical Engineers
BGV	Berufsgenossenschaftliche Vorschriften
CAN	Controller Area Network
DIN	Deutsches Institut für Normung
EN	European Norm
IEC	International Electrotechnical Commission
IP	International Protection
ISO	International Organization for Standardization
MDE	Maschinendatenerfassung
NRS	Nachrüstsatz
ÖNORM	Österreichische Norm
OSHA	Occupational Safety and Health Administration
PDE	Prozessdatenerfassung
SWL	Safe Working Load

List of abbreviations

Glossary

Technical term	Definition/explanation
Abgasrückführung	Serves for reducing the emission of nitrogen oxides that develop during the combustion of fuel in diesel engines.
American National Standards Institute	American National Standards Institute.
American Society of Mechanical Engineers	Professional association of mechanical engineers in the USA.
Berufsgenossenschaftliche Vorschriften	Accident prevention regulations issued by the German Mutual Indemnity Associations.
Controller Area Network	Serial data transmission system.
Deutsches Institut für Normung	Most important national standards organization in the Federal Republic of Germany.

LWN/LR.x/V03.01//Auslieferung/2015-06-03/en

copyright by LIEBHERR

Technical term	Definition/explanation
European Norm	Regulations that were issued by one of the three European Standardization Committees (European Committee for Standardization, European Committee for Electrotechnical Standardization and European Telecommunications Standards Institute).
International Electrotechnical Commission	International Standardization Organization for standards in the field of electrotechnology and electronics.
International Organization for Standardization	International association of standardization organizations that drafts and issues international standards.
International Protection	The protection classes classified with IP define the suitability of electric operating materials for different ambient conditions (water, dust, etc.) as well as protective measures to protect against possible hazards during their use.
Lastmomentbegrenzung	Electronic overload protection system.
Litronic	Electrohydraulic proportional control of the machine. Crane control and management system.
Maschinendatenerfassung	Record and save the most important machine data (status, utilization, operating times, etc.).
Nachrüstsatz	Optional equipment of a machine.
Occupational Safety and Health Administration	American Federal Authority that was established to enforce the Federal Labor Safety Law and issues safety regulations for the industry.
Österreichische Norm	National standard issued by the Austrian Standards Institute.
Prozessdatenerfassung	System for electronic recording, saving and visualization of process data.
Safe Working Load	Maximum admissible load without consideration of dynamic forces.

Glossary

LWN/LR.x/V03.01//Auslieferung/2015-06-03/en

copyright by
LIEBHERR

Contents

1 Product description 49

1.1 Type plate 49

1.2 Declaration of conformity 50

1.3 Appropriate use 51

1.4 Special modes of operation 53

1.5 Inappropriate use 54

1.6 Machine 56

1.6.1 Machine overview 56

1.6.2 Technical data 58

1.6.3 Safety equipment 63

1.6.4 Monitoring installations 64

1.7 Basic machine 66

1.7.1 Basic machine overview 66

1.7.2 A-frame1 74

1.7.3 Steel pendant straps on A-frame1 75

1.7.4 CF pendant straps on A-frame1 76

1.7.5 Uppercarriage 78

1.7.6 Cabin 80

1.7.7 Central power unit 81

1.7.8 Platforms on uppercarriage 83

1.7.9 Undercarriage 135

1.7.10 Crawler side frame 137

1.7.11 Platforms at undercarriage with fixed track width 141

1.7.12 Carbody counterweight 146

1.7.13 Rear counterweight 151

1.8 Information about boom designation 155

1.9 Distinguishing features main boom sections LR 1300 and LR 1300 SX 157

1.10 Main boom - overview 159

1.11 2821 main boom 160

LWN/LR.x/V03.01//Auslieferung/2015-06-03/en

copyright by LIEBHERR

1.11.1 Main boom base section 2821.30 160
1.11.2 Main boom section 2821 3 m (10 ft) 162
1.11.3 Main boom section 2821 6 m (20 ft) 166
1.11.4 Main boom section 2821 12 m (40 ft) 170
1.11.5 Main boom head section 2821.24 174
1.11.6 Rope guide (type A/B) on main boom 2821 177
1.11.7 Mid-point suspension on main boom 2821 180
1.11.8 Steel pendant straps on main boom 2821 189
1.11.9 CF pendant straps on main boom 2821 198
1.12 Reducing piece overview 217
1.13 2821/2316 reducing piece 218
1.13.1 2821/2316.24 reducing piece 12 m (40 ft) 218
1.13.2 Main boom section 2316.25 1 m (3 ft) 220
1.13.3 Mid-point suspension on reducing adapter 2821/2316 221
1.13.4 Steel pendant straps on reducing adapter 2821/2316 240
1.13.5 CF pendant straps on reducing adapter 2821/2316 242
1.14 Fixed jib - overview 245
1.15 1713 fixed jib 246
1.15.1 Jib base section 1713.22 246
1.15.2 1713.18 jib section 3 m (10 ft) 248
1.15.3 1713.18 jib section 6 m (20 ft) 249
1.15.4 1713.18 jib section 12 m (40 ft) 251
1.15.5 1713.21 jib head section 252
1.15.6 Steel pendant straps on fixed jib 1713 253
1.15.7 CF pendant straps on fixed jib 1713 260
1.16 1507 fixed jib 261
1.16.1 Jib 1507.20 261
1.16.2 Steel pendant straps on fixed jib 1507 262
1.16.3 CF pendant straps on fixed jib 1507 267
1.17 1008 fixed jib 268
1.17.1 Jib base section 1008.20 268
1.17.2 1008.17 jib section 3 m (10 ft) 270
1.17.3 1008.17 jib section 6 m (20 ft) 271
1.17.4 1008.20 jib head section 272
1.17.5 Steel pendant straps on fixed jib 1008 273

LWN/LR.x/V03.01/Auslieferung/2015-06-03/en

copyright by LIEBHERR

1.17.6 CF pendant straps on fixed jib 1008 279

1.18 0906 fixed jib 280

1.18.1 Jib 0906.21 280

1.18.2 Steel pendant straps on fixed jib 0906 281

1.18.3 CF pendant straps on fixed jib 0906 284

1.19 Luffing jib - overview 285

1.20 2316 luffing jib 286

1.20.1 Jib base section 2316.22 286

1.20.2 2316.20 jib section 3 m (10 ft) 288

1.20.3 2316.20 jib section 6 m (20 ft) 289

1.20.4 2316.20 jib section 12 m (40 ft) 291

1.20.5 2316.20 jib head section 293

1.20.6 Mid-point suspension on luffing jib 2316 294

1.20.7 Steel pendant straps on luffing jib 2316 304

1.20.8 CF pendant straps on luffing jib 2316 312

1.21 1916 luffing jib 325

1.21.1 Jib base section 1916.22 325

1.21.2 1916.18 jib section 3 m (10 ft) 327

1.21.3 1916.18 jib section 6 m (20 ft) 328

1.21.4 1916.18 jib section 12 m (40 ft) 330

1.21.5 1916.21 jib head section 332

1.21.6 Mid-point suspension on luffing jib 1916 333

1.21.7 Steel pendant straps on luffing jib 1916 343

1.21.8 CF pendant straps on luffing jib 1916 350

1.22 Midfall overview 362

1.23 2316.25 Midfall 363

1.23.1 Midfall 2316.25 363

1.23.2 Mid-point suspension on midfall 2316.25 364

1.23.3 Steel pendant straps on midfall 2316.25 365

1.23.4 CF pendant straps on midfall 2316.25 366

1.24 1916.32 Midfall 368

1.24.1 Midfall 1916.32 368

1.24.2 Mid-point suspension on midfall 1916.32 369

1.24.3 Steel pendant straps on midfall 1916.32 370

1.24.4 CF pendant straps on midfall 1916.32 371

LWN/LR.x/V03.01//Auslieferung/2015-06-03/en

copyright by LIEBHERR

1.25 Auxiliary jib* (36 t (79.300 lb)) 372

1.26 Auxiliary jib* (30 t (66.000 lb)) 375

1.27 Auxiliary jib* (15 t (33.000 lb)) 377

1.28 Derrick equipment* 379

1.28.1 Overview of derrick equipment 379

1.28.2 Derrick boom 2220 380

1.28.3 Suspended counterweight 392

1.28.4 Counterweight carriage 398

1.29 Rope fixation 405

1.29.1 Main boom head 405

1.29.2 Fixed jib head 406

1.29.3 Luffing jib head 407

1.29.4 Auxiliary jib (36 t (79.300 lb)) on main boom head 408

1.29.5 Auxiliary jib (15 t (33.000 lb)) on jib head 408

1.29.6 Midfall 409

1.29.7 Pocket lock 409

1.29.8 Cross strap 411

1.29.9 Pins for the rope fixing point 412

1.30 Pulley block/hook* 413

1.30.1 Pulley block (300 t (661,377 lb)) 413

1.30.2 Pulley block (160 t (352,734 lb)) 414

1.30.3 Pulley block (100 t (220,459 lb)) 416

1.30.4 Pulley block (50 t (110,230 lb)) 417

1.30.5 Hook (16 t (35,273 lb)) 418

1.31 Abseil rescue equipment* 420

1.32 Safety barrier* 421

1.33 Slinging plates on uppercarriage* 422

1.34 Suction flap* 423

1.35 Armrests* for operator's seat 424

1.36 Outside mirror* 425

1.37 Counterweight carriage preparation unit* 426

1.37.1 Hydraulic connections and electricity connections for the counterweight carriage 426

1.37.2 Control panel X26 and mount 427

1.38 Tagline winch* 428

LWN/LR.x/V03.01//Auslieferung/2015-06-03/en

copyright by LIEBHERR

1.39 Refueling pump* 430

1.40 Cab roof protection guard* 431

1.41 Derrick preparation unit 432

1.41.1 Hydraulic connections and electricity connections for the derrick 432

1.42 Lightning rods* 433

1.43 External power supply* 434

1.43.1 External power supply obstacle warning light 434

1.43.2 External supply low temperature package 436

1.44 Radio remote control* 439

1.45 Foot pedal adjuster* 442

1.46 GSM/GPRS/GPS modem 443

1.47 Hook fixing point * 444

1.48 Handrail* / wide steps* 446

1.49 Obstacle warning light* 447

1.50 Third hoist limit switch* 448

1.51 Hydraulic cab elevation* 449

1.52 Cabin railing* 451

1.53 Cable remote control 453

1.54 Ventilation, heating and air-conditioning 455

1.54.1 Cooling circuit 456

1.54.2 Heating circuit 461

1.54.3 Auxiliary air heating* 464

1.54.4 Electric components 466

1.54.5 Mechanic components 470

1.55 Leak oil return* 471

1.56 Ladder* for boom 472

1.57 Ladder* for uppercarriage 474

1.58 Reading light* for cabin 476

1.59 Litronic control system 477

1.60 Retrofit kits* for operation with two ropes over the jib head section 478

1.60.1 Retrofit kit for luffing jibs 1008 / 1309 / 1713 / 1916 / 2316 478

1.60.2 Retrofit kit for 1008 fixed jib 479

1.60.3 Retrofit kit for 0806 fixed jib 480

1.61 Luffing jib luffing winch as auxiliary winch* 481

1.62 By-pass flow filter system* 482

LWN/LR.x/V03.01//Auslieferung/2015-06-03/en

copyright by LIEBHERR

1.63 Emergency operation control* 483
1.64 Visual motion warning device* 484
1.65 Pump wear indicator* 486
1.66 Quick latch couplings* on jib luffing winch 488
1.67 Socket* in cab 490
1.68 Falling object protection* for cabin 491
1.69 Vandalism protection* 493
1.69.1 Top cover 494
1.69.2 Rear cover 495
1.69.3 Front cover 496
1.69.4 Right front cover 497
1.69.5 Right rear cover 499
1.69.6 Left front cover 500
1.69.7 Left rear cover 501
1.69.8 Brackets for front cover 502
1.69.9 Barrier rod 502
1.70 Video monitoring system* 504
1.70.1 Cabin overview 504
1.70.2 Machine overview 505
1.70.3 Video surveillance - basic device 506
1.70.4 Video surveillance - boom 508
1.70.5 Quad monitor 509
1.70.6 Camera 511
1.70.7 Control panel zoom camera 512
1.70.8 Zoom camera 513
1.70.9 Mounts 514
1.70.10 Camera cable in main boom base section 520
1.70.11 Zoom camera in main boom head 521
1.70.12 Zoom camera in fixed jib head 522
1.70.13 Zoom camera in luffing jib head 524
1.70.14 Zoom camera in auxiliary jib 36 t (79300 lb) 525
1.70.15 Zoom camera in auxiliary jib 15 t (33000 lb) 525
1.70.16 Foot pedal* for zoom camera 527
1.71 Central lubrication system 528
1.72 Auxiliary floodlights* 529

LWN/LR.x/V03.01//Auslieferung/2015-06-03/en

copyright by LIEBHERR

1.72.1 Floodlights on uppercarriage 529
1.72.2 Floodlights on cabin 532
1.72.3 Adjustable floodlights on main boom base section 533
1.72.4 Floodlights on main boom 534
1.72.5 Floodlights on jib head 539

2 Safety instructions 543
2.1 Technical condition of the machine 543
2.2 Areas of responsibility 543
2.2.1 Manufacturer 543
2.2.2 Owner 543
2.2.3 Machine operator 544
2.2.4 Rigger 544
2.2.5 Banksman 544
2.2.6 Maintenance and service personnel 544
2.3 Requirements to personnel 545
2.3.1 Machine operator 545
2.3.2 Rigger 545
2.3.3 Banksman 546
2.3.4 Maintenance personnel 546
2.4 Personal protective equipment 546
2.5 Work area 547
2.6 Danger zone 548
2.7 Safety signs on the machine 549
2.8 Safety signs on the machine (US market) 556
2.9 Meaning of the safety signs 563
2.9.1 Mandatory signs 563
2.9.2 Prohibition signs 564
2.9.3 Warning signs 565
2.9.4 Rescue signs 567
2.9.5 Fire protection signs 567
2.10 Meaning of machine-specific signs 568
2.10.1 Safety signs 568
2.10.2 Notice signs 569
2.11 Hazards 573

LWN/LR.x/V03.01//Auslieferung/2015-06-03/en

copyright by LIEBHERR

2.11.1 Mechanical action 573
2.11.2 Electrical energy 574
2.11.3 Hydraulic energy 575
2.11.4 Burns 576
2.11.5 Chemical burns 577
2.11.6 Fire and explosion 577
2.11.7 Poisoning and suffocation 579
2.11.8 Electromagnetic influence 579
2.11.9 Exposure to wind 580
2.11.10 Snow and ice loads 585
2.11.11 Ground bearing strength 586
2.11.12 Lightning strike 587
2.11.13 Overhead power lines 588
2.11.14 Environment 590
2.12 What to do in dangerous situations 591
2.12.1 How to respond in the event of a current transfer 591
2.12.2 How to respond in the event of a fire 592
2.12.3 Firefighting 593
2.13 Working at heights 595
2.14 Application on floating devices 595
2.14.1 Operation of the machine on floating devices 596
2.14.2 Transport of the machine on floating devices 597
2.14.3 Higher risk of machine corrosion on floating devices 597
2.15 Use at low temperatures 598
2.15.1 Operation of the machine down to -20 °C (-4 °F) (standard) 598
2.15.2 Operation of the machine down to -25 °C (-13 °F)* 599
2.15.3 Operation of the machine down to -40 °C (-40 °F)* 599
2.16 Hand signals 599
2.16.1 General hand signals in accordance with BGV A8 600
2.16.2 Special hand signals for sling gear application 602
2.16.3 Hand signals for lifting gear application in accordance with ASME/ANSI B30.5 605

3 Control and operating elements 613
3.1 Operating elements on the undercarriage 613

LWN/LR.x/V03.01/Auslieferung/2015-06-03/en

copyright by LIEBHERR

3.1.1 Operating elements at undercarriage with fixed track width 613

3.1.2 Operating elements at undercarriage* with adjustable track width 614

3.2 Operating elements on the uppercarriage 615

3.3 Operating elements on counterweight carriage* 616

3.4 Cabin 617

3.5 Left control lever 618

3.5.1 Function assignment of the left control lever on machine without derrick equipment* 618

3.5.2 Function assignment of the left control lever on machine with derrick equipment* 626

3.6 Right control lever 640

3.6.1 Function assignment of the right control lever on machine without derrick equipment* 640

3.6.2 Function assignment of the right control lever on machine with derrick equipment* 654

3.7 Foot pedals and hand levers 669

3.8 Control panel X11 671

3.9 Control panel X12 673

3.10 Control panel X23 675

3.11 Control panel *X26* for counterweight carriage* 678

3.11.1 Operating units 679

3.11.2 Buttons 679

3.12 Monitor 681

3.12.1 Status bar 681

3.12.2 Display section 688

3.12.3 Menu bar 689

3.12.4 Submenu bar 691

3.13 Screen *Start* 692

3.14 *Mode* screen 693

3.15 Screen *Operation* in derrick mode 700

3.16 *Aggregate* screen 705

3.17 *Operating hours* screen 712

3.18 Setup screen 715

3.18.1 Setup - boom configuration screen 717

3.18.2 Setup - boom configuration 1 screen 719

3.18.3 Setup - boom configuration 2 screen 722

3.18.4 Setup - boom configuration 3 screen 725

LWN/LR.x/V03.01//Auslieferung/2015-06-03/en

copyright by LIEBHERR

3.18.5 Setup - boom configuration 4 screen 730

3.18.6 Setup - boom configuration 5 screen 734

3.18.7 Setup screen - boom configuration 6 739

3.18.8 Setup screen - boom configuration 8 742

3.18.9 Setup screen - boom configuration 9 747

3.18.10 Setup - load chart screen 752

3.19 Screen *Working range limitation* 754

3.19.1 Screen *Working range limitation - working range limitation* 754

3.19.2 Screen *Working range limitation - lifting height limitation* 761

3.20 Screen *Access control* 764

3.20.1 Without retrofit kit access control (black ignition keys) 764

3.20.2 Without retrofit kit access control (blue ignition keys) 765

3.20.3 With retrofit kit access control (red and blue ignition keys)* 766

3.21 *Mode* screen 769

3.22 *Settings* screen 771

3.22.1 Screen *Settings - components* 771

3.22.2 Settings - units screen 774

3.22.3 Screen *Settings - Litronic testing system* 777

3.23 *Error messages* screen 782

3.24 Cable remote control 784

3.24.1 Cable remote control on uppercarriage 784

3.24.2 Cable remote control on undercarriage* 784

3.25 Radio remote control* 786

3.25.1 Operating elements 786

3.25.2 Monitor 795

3.26 Emergency operation control* 803

3.27 Hydraulic cab elevation* 805

3.27.1 Operating elements in the cab 805

3.27.2 Operating elements on mast 806

3.27.3 Limit switches 806

3.28 Control unit *external air conditioning system** 808

3.29 *Auxiliary heating** control unit 810

3.30 Video monitoring system* 811

3.30.1 Quad monitor 811

3.30.2 Control panel zoom camera 812

LWN/LR.x/V03.01/Auslieferung/2015-06-03/en

copyright by LIEBHERR

3.31 Central lubrication* 814
3.32 Additional floodlights* 815
3.32.1 Cabin 815
3.32.2 Search floodlight 816

4 Operation 819
4.1 Checks before start up 819
4.1.1 Walk round 819
4.1.2 Checking the battery main switch 820
4.2 Start-up 821
4.2.1 Adjusting the operator's seat 821
4.2.2 Switching on the ignition 821
4.2.3 Confirming the existing setup 821
4.2.4 Checking the fuel fill level 822
4.2.5 Checking the urea solution fill level 822
4.2.6 Checking the hydraulic oil tank gate valve 822
4.2.7 Starting the diesel engine 823
4.2.8 Adjusting the RPM of the diesel engine 824
4.2.9 Setting the constant engine RPM 826
4.2.10 Lowering the safety lever 828
4.2.11 Checking the tilting-back support cylinder 828
4.3 Control panels 829
4.3.1 Setting control panel *X25** or control panel *X26** 829
4.4 Operator's seat 831
4.4.1 Adjusting the control stand horizontally 832
4.4.2 Adjusting the operator's seat 832
4.4.3 Adjusting the dampening 837
4.4.4 Adjusting the ergonomics* 837
4.4.5 Safety belt* 839
4.5 Lighting 840
4.5.1 Operating the floodlights on the uppercarriage 840
4.5.2 Operating the additional floodlights 840
4.5.3 Operating the cab lighting 841
4.5.4 Operating the engine compartment lighting 841
4.6 Windscreen wiper system 842

LWN/LR.x/V03.01//Auslieferung/2015-06-03/en

copyright by LIEBHERR

4.6.1 Operating the windscreen wipers 842

4.6.2 Operating the windscreen washer system 843

4.7 Ventilation, heating and air-conditioning 844

4.7.1 Setting the air vent 846

4.7.2 Adjusting the lamella vents 847

4.7.3 Setting recirculated air or fresh air 847

4.7.4 Operating the ventilation 847

4.7.5 Using the heater 848

4.7.6 Turning the air conditioning system on or off 848

4.7.7 Operating the external air conditioning system* 849

4.7.8 Auxiliary heating* 856

4.8 Additional cab equipment 860

4.8.1 Using the horn 860

4.8.2 Operating the safety lever 860

4.8.3 Operating the radio 861

4.8.4 Using the ashtray 862

4.8.5 Using the cigarette lighter 863

4.9 Cab tilting device* 864

4.9.1 Tilting the cabin 864

4.10 Hydraulic cabin elevation* 865

4.10.1 Adjusting the cabin 865

4.11 Central lubrication* 867

4.11.1 Set lubrication time 867

4.11.2 Set pause time 867

4.11.3 Interim lubrication 867

4.12 Mode 868

4.12.1 Activating/deactivating assembly functions on or off 868

4.12.2 Selecting the mode 868

4.13 Programming the setup 870

4.13.1 Call up the *Setup* screen 870

4.13.2 Selecting and changing settings 871

4.13.3 Calculating the revised set-up 871

4.13.4 Checking the programed setup 872

4.14 Load moment limiter (LML) 873

4.14.1 General 873

LWN/LR.x/V03.01//Auslieferung/2015-06-03/en

copyright by LIEBHERR

4.14.2 Load moment limiter self-lock 876

4.14.3 Load moment limiter shut down (CE load chart) 878

4.14.4 Load moment limiter shut down (ANSI load chart) 879

4.15 Calculating load charts online 881

4.15.1 Calculating load charts 881

4.15.2 Boom configuration 4 - load position 1 882

4.15.3 Boom configuration 4 - load position 2 883

4.15.4 Boom configuration 5 - load position 1 884

4.15.5 Boom configuration 5 - load position 3 885

4.15.6 Boom configuration 6 - load position 2 886

4.15.7 Boom configuration 8 - load position 1 887

4.15.8 Boom configuration 8 - load position 2 888

4.15.9 Boom configuration 9 - load position 1 889

4.15.10 Boom configuration 9 - load position 2 890

4.16 Set the load capacity display to zero (taring) 891

4.16.1 Setting the load display of winch1 or winch2 to zero 891

4.17 Single hook operation/two-hook operation 892

4.17.1 Single-hook mode with one winch on one hook 894

4.17.2 Single-hook mode with two winches on one hook 896

4.17.3 Single-hook mode with two winches on two hooks 897

4.17.4 Twin-hook mode with two hooks on two loads 903

4.17.5 Twin-hook mode with two hooks on one load 905

4.18 Crawlers 909

4.18.1 Setting the crawler speed 909

4.18.2 Operating the travel gear 909

4.18.3 Operating the crawler with counterweight carriage* 913

4.18.4 Locking or unlocking the crawler 918

4.19 Swing 919

4.19.1 Setting the swing speed 919

4.19.2 Turning the swing free-wheel on or off 920

4.19.3 Operating the swing 921

4.19.4 Operating the swing with suspended counterweight* 925

4.19.5 Operating the swing with counterweight carriage* 926

4.19.6 Locking or unlocking the swing 927

4.20 Main boom 928

LWN/LR.x/V03.01//Auslieferung/2015-06-03/en

copyright by LIEBHERR

4.20.1 Operating the main boom 928

4.20.2 Locking or unlocking the main boom 932

4.21 Jib 933

4.21.1 Selecting the jib 933

4.21.2 Operating the jib 934

4.22 Winch 1/Winch 2 939

4.22.1 Operating winch 1 939

4.22.2 Operating winch 2 943

4.22.3 Locking or unlocking winch1/winch2 947

4.23 Counterweight carriage* radius adjustment 949

4.23.1 Activating the radius adjustment of the counterweight carriage 949

4.23.2 Increasing the radius of the counterweight carriage 950

4.23.3 Decreasing the radius of the counterweight carriage 950

4.23.4 Deactivating the radius adjustment of the counterweight carriage 951

4.24 Derrick hoist cylinder* 952

4.24.1 Selecting the derrick hoist cylinder 952

4.24.2 Operating the derrick hoist cylinder 953

4.25 Free-fall operation* 954

4.25.1 Switching on free-fall operation 954

4.25.2 Selecting free-fall mode 955

4.25.3 Operating free-fall operation 956

4.25.4 Switching off free-fall operation 959

4.26 Winch synchronization* 960

4.26.1 Activating winch synchronization 960

4.26.2 Operating the winch synchronization 961

4.26.3 Deactivating winch synchronization 963

4.27 Blocked crawlers* 964

4.27.1 Driving onto the support plates 965

4.27.2 Working with Blocked Crawlers 966

4.28 Assembly cylinder * 968

4.28.1 Select assembly cylinder 968

4.28.2 Operating the assembly cylinder 968

4.29 Filling machine with fuel 971

4.29.1 Filling the fuel tank 971

4.29.2 Fuelling up with urea solution 972

LWN/LR.x/V03.01//Auslieferung/2015-06-03/en

copyright by LIEBHERR

4.30	Radio remote control*	973
4.30.1	rechargeable battery	973
4.30.2	battery charger	973
4.30.3	Starting the machine with the radio remote control	974
4.31	Rope measuring system*	980
4.31.1	Setting the rope length to zero	980
4.31.2	Calibrating the rope measuring system	980
4.32	Ground pressure display*	982
4.32.1	Operating the ground pressure display	982
4.33	Inclination display*	983
4.33.1	Operating the inclinometer	983
4.34	Working range limitation*	984
4.34.1	Operating the edge limitation	984
4.34.2	Operating the sector limitation	987
4.34.3	Operating the radius limitation	989
4.34.4	Operating the slewing range limitation	992
4.34.5	Operating the lifting height limitation	993
4.34.6	Cancelling the stop after crawler operation	995
4.34.7	Resetting limitations	995
4.35	Rope reeving winch	996
4.35.1	Setting the rope reeving winch to free-wheel	996
4.35.2	Deactivating rope reeving winch free-fall	997
4.35.3	Reeving the rope of the rope reeving winch	997
4.36	Tagline winch*	998
4.36.1	Putting the tagline winch into operation	998
4.36.2	Turn the tagline winch on or off	999
4.36.3	Set the constant tension of the tagline winch	999
4.36.4	Setting the pull force of the tagline winch	1000
4.36.5	Select maximum pull force of the tagline winch	1002
4.36.6	Turning tagline winch free-wheel on or off	1002
4.37	Luffing jib luffing winch as auxiliary winch*	1004
4.37.1	Use as jib luffing winch	1004
4.37.2	Use as leader height adjusting winch	1005
4.37.3	Use as auxiliary winch	1005
4.38	Sensitive hoisting*	1006

LWN/LR.x/V03.01//Auslieferung/2015-06-03/en

copyright by LIEBHERR

4.38.1 Turning the function sensitive lift on or off 1006

4.38.2 Operating sensitive hoisting 1006

4.39 Abseil rescue equipment* 1007

4.39.1 Using abseil rescue equipment 1007

4.40 Emergency stop 1009

4.40.1 Using emergency stop 1009

4.41 Shutdown 1010

4.41.1 Short work interruption 1010

4.41.2 Long work interruption 1011

4.41.3 Switching off battery main switch 1012

4.42 Hydraulic emergency mode* 1013

4.42.1 Winch 2 emergency mode 1013

4.42.2 Main boom adjusting winch emergency mode 1015

4.42.3 Swing emergency mode 1016

4.43 Emergency operation control* 1019

4.43.1 Operating the emergency control 1019

5 Operational faults, diagnosis 1023

5.1 Malfunctions 1023

5.1.1 Identifying faults 1023

5.1.2 Error displays on monitor 1023

5.1.3 Troubleshooting 1028

5.2 Litronic testing system 1029

5.2.1 Litronic testing system overview 1029

5.2.2 Screen pages 1030

5.2.3 Starting the Litronic® testing system 1037

5.3 Fuses 1038

5.3.1 List of fuses 1038

5.3.2 Checking the fuses 1040

5.3.3 Replacing fuses 1042

6 Operational planning 1045

6.1 Assembly site 1045

6.2 Tools required 1048

6.2.1 Machine with self-assembly system 1048

LWN/LR.x/V03.01//Auslieferung/2015-06-03/en

copyright by LIEBHERR

6.2.2 Machine without self-assembly system 1048

6.3 Required length of winch1/winch2 rope 1049

6.3.1 Calculating the length of winch1/winch2 rope 1049

6.4 Choosing the correct hook or pulley block 1051

6.5 Positioning the hook or pulley block 1053

6.6 Choice of correct winch in derrick operation 1054

6.7 Restrictions due to exposure to wind 1055

6.7.1 Erecting the boom 1055

6.7.2 Reducing the load 1055

6.7.3 Parked positions of boom configurations 1055

6.7.4 Laying down the boom 1065

6.8 Traveling on gradients 1066

6.8.1 Permitted gradient for a machine without derrick equipment* 1068

6.8.2 Permitted gradient for a machine with derrick equipment* 1087

6.9 Rigging equipment and/or sling gear 1100

6.9.1 4-strand round sling rigging with chain shortening devices 1101

6.9.2 4-strand round sling gear 1102

6.9.3 Other lifting devices 1102

7 Assembly and dismantling 1107

7.1 Explanation of symbols used 1107

7.2 Implementation instructions for assembly and disassembly 1109

7.3 Locking elements - overview 1110

7.3.1 Split pin 1110

7.3.2 Linchpin 1111

7.3.3 Spring cotter pin 1112

7.3.4 Safety pin 1113

7.3.5 Locking washers 1115

7.4 Assembling the basic machine 1116

7.4.1 Notes 1116

7.4.2 Moving cabin platforms* into working position 1116

7.4.3 Swivel the cab to the working position 1120

7.4.4 Mounting the cabin railing* 1122

7.4.5 Putting the load moment limiter lamp and flashing light into working position 1129

LWN/LR.x/V03.01//Auslieferung/2015-06-03/en

copyright by LIEBHERR

7.4.6 Mounting the platforms on the uppercarriage 1131

7.4.7 Mounting the ladder on the uppercarriage 1146

7.4.8 Mounting the uppercarriage railing 1147

7.4.9 Fitting the exhaust pipe 1153

7.4.10 Checking the position of the bypass plug 1155

7.4.11 Putting the machine into operation 1156

7.4.12 Switching on assembly mode functions 1156

7.4.13 Switching on cylinder adjustment functions 1156

7.4.14 Extend the tilting back support cylinders 1157

7.4.15 Erecting A-frame1 1157

7.4.16 Unloading the machine 1158

7.4.17 Removing the uppercarriage lock 1174

7.4.18 Attaching the crawler side frame 1174

7.4.19 Using the machine as assembly crane 1206

7.4.20 Attach the carbody counterweight 1208

7.4.21 Installing platforms at undercarriage with fixed track width 1215

7.4.22 Fitting the rear counterweight 1216

7.5 Main boom 2821 1230

7.5.1 Configuration of main boom 1230

7.5.2 Lengths of mid-point suspensions 1232

7.5.3 Overview of main boom 2821 steel pendant straps 1233

7.5.4 Overview of main boom 2821 CF pendant straps 1234

7.5.5 Reeving diagrams for one rope across main boom head 2821 (load position1) 1236

7.5.6 Reeving diagrams for two ropes across main boom head 2821 (load position1) 1241

7.5.7 Reeving diagrams for one rope across auxiliary jib (36 t (79300 lb)) on main boom head 2821 (load position1) 1245

7.5.8 Reeving diagrams for two ropes across auxiliary jib (36 t (79300 lb)) and main boom head 2821 (load position 1) 1247

7.5.9 Reeving diagram - jib luffing winch as auxiliary winch 1248

7.6 Assembly of main boom without derrick equipment* 1250

7.6.1 Notes 1250

7.6.2 Programming the setup 1250

7.6.3 Unloading and positioning the main boom section 1250

7.6.4 Assembling the ladder* for the boom 1251

7.6.5 Bolting the boom head section to the boom sections 1253

LWN/LR.x/V03.01/Auslieferung/2015-06-03/en

copyright by LIEBHERR

7.6.6	Connecting and checking boom fall arrest*	1256
7.6.7	fit the rope guide	1256
7.6.8	Pinning the pendant straps	1257
7.6.9	Removing the jib backstay straps	1258
7.6.10	Installing mid-point suspension	1259
7.6.11	Installing mid-point suspension (with main boom length 80 m (262 ft), 83 m (272 ft) and 86 m (282 ft) and jib 1507 attached)	1262
7.6.12	Rigging and lifting the main boom base section	1263
7.6.13	Attaching the boom base section to the uppercarriage	1264
7.6.14	Connecting hydraulic lines to the uppercarriage	1267
7.6.15	Connecting electric cables to the uppercarriage	1271
7.6.16	Pinning the assembly cylinder to main boom base section	1271
7.6.17	Folding the front feet of the main boom base section upwards	1273
7.6.18	Bolting the boom base section to the main boom	1273
7.6.19	Bolting the equalizer on A-frame 1 to the main boom pendant straps	1275
7.6.20	Attaching the auxiliary jib (36 t (79300 lb)) to the boom head section	1275
7.6.21	Fitting the hoist limit switch to the auxiliary jib	1279
7.6.22	Folding down the link plates for the 11th pulley	1279
7.6.23	Installing second pulley to 3-fold reeve the auxiliary jib (36 t (79300 lb))	1280
7.6.24	Connect the electric cables	1281
7.6.25	Installing the obstacle warning light	1282
7.6.26	Fitting the anemometer	1284
7.6.27	Moving the lightning rods* into working position	1286
7.6.28	Reeving the rope	1288
7.6.29	Attaching the rope fixing point	1296
7.6.30	Installing the hoist limit switch weight	1301
7.6.31	Bypass unused hoist limit switches.	1305
7.7	Erecting the main boom without derrick equipment*	1307
7.7.1	Erecting the main boom	1307
7.7.2	Switching off assembly mode functions	1310
7.7.3	Checking the main boom limit switch plate for proper adjustment	1311
7.8	Main boom 2821 + derrick boom 2220	1313
7.8.1	Configuration of main boom in derrick mode	1313
7.8.2	Lengths of mid-point suspensions	1315
7.8.3	Overview of main boom 2821 steel pendant straps + derrick boom 2220	1316

LWN/LR.x/V03.01//Auslieferung/2015-06-03/en

copyright by LIEBHERR

7.8.4 Overview of CF pendant straps of main boom 2821 + derrick boom 2220 1319

7.8.5 Reeving diagrams for one rope across main boom head 2821 (load position1) 1323

7.8.6 Reeving diagrams for two ropes across main boom head 2821 (load position1) 1328

7.8.7 Reeving diagrams for one rope across auxiliary jib (36 t (79300 lb)) on main boom head 2821 (load position1) 1332

7.8.8 Reeving diagrams for two ropes across auxiliary jib (36 t (79300 lb)) and main boom head 2821 (load position 1) 1334

7.8.9 Reeving diagram - jib luffing winch as auxiliary winch 1335

7.9 Assembly of main boom with derrick equipment* 1337

7.9.1 Assembly of derrick boom 1337

7.9.2 Assembling the main boom 1356

7.10 Assembly of suspended counterweight of derrick equipment* 1418

7.10.1 Positioning the counterweight frame 1418

7.10.2 Positioning the ballast slabs 1418

7.10.3 Release the pendant ropes from the derrick boom 1419

7.11 Assembly of counterweight carriage of derrick equipment* 1420

7.11.1 Positioning the wheeled counterweight carriage 1420

7.11.2 Attach the telescopic unit 1420

7.11.3 Connecting electric lines and hydraulic lines 1422

7.11.4 Placing ladder and floodlight in working position 1423

7.11.5 Installing the counterweight carriage on the basic machine 1424

7.11.6 Placing and lashing counterweight slabs 1434

7.12 Erecting the main boom with derrick equipment* 1437

7.12.1 Raising the derrick boom 1437

7.12.2 Checking the derrick boom tilting-back supports 1438

7.12.3 Pinning the suspended counterweight pendant ropes to the counterweight frame 1439

7.12.4 Pinning the spacer frame with the uppercarriage 1441

7.12.5 Pinning the counterweight carriage pendant straps to the counterweight carriage 1443

7.12.6 Erecting the main boom 1444

7.12.7 Switching off assembly mode functions 1447

7.12.8 Checking the main boom limit switch plate for proper adjustment 1448

7.13 Main boom 2821 + reducing adapter 2821/2316 1450

7.13.1 Configuration of main boom 1450

LWN/LR.x/V03.01/Auslieferung/2015-06-03/en

copyright by LIEBHERR

7.13.2 Lengths of mid-point suspensions 1453

7.13.3 Overview of main boom 2821 steel pendant straps + reducing adapter 2821/2316 1459

7.13.4 Overview of main boom 2821 CF pendant straps + reducing adapter 2821/2316 1461

7.13.5 Reeving diagrams for one rope across main boom head 2316 (load position1) 1463

7.13.6 Reeving diagrams for two ropes across main boom head 2316 (load position1) 1465

7.14 Assembling the main boom + reducing piece 1467

7.14.1 Notes 1467

7.14.2 Installing the reducing piece 1467

7.14.3 Installing mid-point suspension 1468

7.14.4 Moving the lightning rods* into working position 1473

7.14.5 Reeving the rope 1475

7.15 Fixed jib 1713 1484

7.15.1 Configuration of jib 1484

7.15.2 Configuration of main boom 1484

7.15.3 Overview of pendant straps on fixed jib 1713 1485

7.15.4 Reeving diagrams for one rope across jib head 1713 (load position1) 1487

7.15.5 Reeving diagrams for two ropes across jib head 1713 (load position1) 1488

7.15.6 Reeving diagrams for one rope across main boom head 2821 (load position2) 1489

7.16 Fixed jib 1507 1494

7.16.1 Configuration of jib 1494

7.16.2 Configuration of main boom 1494

7.16.3 Lengths of mid-point suspensions 1495

7.16.4 Composition of main boom in derrick mode with fixed jib 1507 attached 1496

7.16.5 Length of midpoint suspension in derrick mode with installed fixed jib 1507 1498

7.16.6 Overview of pendant straps on fixed jib 1507 1499

7.16.7 Reeving diagrams for one rope across jib head 1507 (load position1) 1501

7.16.8 Reeving diagrams for two ropes across jib head 1507 (load position1) 1503

7.16.9 Reeving diagrams for one rope across main boom head 2821 (load position2) 1504

7.17 Fixed jib 1008 1509

7.17.1 Configuration of jib 1509

7.17.2 Configuration of main boom 1509

LWN/LR.x/V03.01//Auslieferung/2015-06-03/en

copyright by LIEBHERR

7.17.3 Overview of pendant straps on fixed jib 1008 1510

7.17.4 Reeving diagrams for one rope across jib head 1008 (load position1) 1512

7.17.5 Reeving diagrams for two ropes across jib head 1008 (load position1) 1513

7.17.6 Reeving diagrams for one rope across main boom head 2821 (load position2) 1514

7.18 Fixed jib 0906 1519

7.18.1 Configuration of jib 1519

7.18.2 Configuration of main boom 1519

7.18.3 Overview of pendant straps on fixed jib 0906 1520

7.18.4 Reeving diagrams for one rope across jib head 0906 (load position1) 1521

7.18.5 Reeving diagrams for two ropes across jib head 0906 (load position1) 1523

7.18.6 Reeving diagrams for one rope across main boom head 2821 (load position2) 1523

7.19 Assembling the fixed jib 1528

7.19.1 Notes 1528

7.19.2 Programming the setup 1528

7.19.3 Unloading and positioning the jib components 1528

7.19.4 Bolting the jib head section to the jib sections 1529

7.19.5 Attaching the jib base section 1530

7.19.6 Pinning the jib to the jib base section 1533

7.19.7 Pinning the pendant straps 1533

7.19.8 Attaching connecting links to the boom head section 1534

7.19.9 Attaching the main boom (self-assembly system) 1536

7.19.10 Pinning the A-frame 2 equaliser to the main boom 1536

7.19.11 Pinning the jib backstay straps (jib 1507) 1537

7.19.12 Installing the connecting elements and spacer brackets on jib backstay straps (jib 1507) 1538

7.19.13 Pinning the equalizer of A-frame2 to the main boom (jib 1507) 1538

7.19.14 Connect the electric cables 1540

7.19.15 Installing the obstacle warning light 1541

7.19.16 Fitting the anemometer 1542

7.19.17 Moving the lightning rods* into working position 1544

7.19.18 Reeving the rope 1547

7.19.19 Attaching the rope fixing point 1555

7.19.20 Installing the hoist limit switch weight 1559

7.19.21 Bypass unused hoist limit switches. 1563

LWN/LR.x/V03.01/Auslieferung/2015-06-03/en

copyright by LIEBHERR

7.19.22 Erecting a main boom + fixed jib 1564

7.19.23 Switching off assembly mode functions 1567

7.19.24 Checking the main boom limit switch plate for proper adjustment 1568

7.20 Luffing jib 2316 1570

7.20.1 Configuration of jib 1570

7.20.2 Lengths of jib mid-point suspensions 1572

7.20.3 Configuration of main boom 1574

7.20.4 Overview of steel pendant straps on luffing jib 2316 1574

7.20.5 Overview of CF pendant straps on luffing jib 2316 1576

7.20.6 Reeving diagram A-frame2/A-frame3 1579

7.20.7 Reeving diagrams for one rope across jib head 2316 (load position1) 1580

7.20.8 Reeving diagrams for two ropes across jib head 2316, 1916, 1713, 1309, 1008 (load position1) 1582

7.20.9 Reeving diagrams for one rope across main boom head 2821 (load position2) 1583

7.20.10 Reeving diagrams for one rope across auxiliary jib (30 t (66.000 lb)) on jib head 2316 (load position1) 1588

7.21 Luffing jib 1916 1590

7.21.1 Configuration of jib 1590

7.21.2 Lengths of jib mid-point suspensions 1591

7.21.3 Configuration of main boom 1593

7.21.4 Overview of steel pendant straps on luffing jib 1916 1594

7.21.5 Overview of CF pendant straps on luffing jib 1916 1596

7.21.6 Rope reeving system for A-frame 2/A-frame 3 1599

7.21.7 Reeving diagrams for one rope across jib head 1916 (load position1) 1600

7.21.8 Reeving diagrams for two ropes across jib head 2316, 1916, 1713, 1309, 1008 (load position1) 1601

7.21.9 Reeving diagrams for one rope across main boom head 2821 (load position2) 1603

7.21.10 Reeving diagrams for one rope across auxiliary jib (15 t (33.000 lb)) on jib head 1916, 1713, 1309, 1008 (load position1) 1608

7.22 Assemble the luffing jib 1609

7.22.1 Notes 1609

7.22.2 Programming the setup 1609

7.22.3 Unloading and positioning the jib components 1609

7.22.4 Attaching the auxiliary jib (15 t (33.000 lb)) to the jib head section 1610

7.22.5 Attaching the auxiliary jib (30 t (66.000 lb)) to the jib head section 1612

LWN/LR.x/V03.01//Auslieferung/2015-06-03/en

copyright by
LIEBHERR

7.22.6 Bolting the jib head section to the jib sections 1614

7.22.7 Attaching the jib base section 1615

7.22.8 Checking the pressure in the accumulator of the hydraulic tilting-back supports 1618

7.22.9 Attaching the main boom (self-assembly system) 1618

7.22.10 Connect A-frame2 with the rope of winch1/winch2. 1619

7.22.11 Reeving A-frame 2/A-frame 3 1619

7.22.12 Erecting A-frame2/A-frame3 with rope of winch1/winch2 and bolting the hydraulic tilting-back supports 1620

7.22.13 Bolting the equaliser on A-frame 2 to the jib backstay straps 1623

7.22.14 Connecting the equaliser on A-frame 3 to the jib base section 1624

7.22.15 Bolting the jib base section to the jib 1626

7.22.16 Bolting the equaliser on A-frame 3 to the jib pendant straps 1627

7.22.17 Installing mid-point suspension 1627

7.22.18 Pinning the pendant straps 1631

7.22.19 Connect the electric cables 1632

7.22.20 Installing the obstacle warning light 1633

7.22.21 Fitting the anemometer 1635

7.22.22 Moving the lightning rods* into working position 1637

7.22.23 Reeving the rope 1640

7.22.24 Attaching the rope fixing point 1649

7.22.25 Installing the hoist limit switch weight 1653

7.22.26 Bypass unused hoist limit switches. 1657

7.22.27 Erecting the main boom + luffing jib 1658

7.22.28 Switching off assembly mode functions 1663

7.22.29 Checking the top jib limit switch for function 1664

7.22.30 Checking the jib limit switch plate for proper adjustment 1666

7.23 Luffing jib 2316 + midfall 2316 1668

7.23.1 Configuration of jib 1668

7.23.2 Lengths of jib mid-point suspensions 1669

7.23.3 Configuration of main boom 1671

7.23.4 Overview of steel pendant straps on luffing jib 2316 + midfall 2316 1672

7.23.5 Overview of CF pendant straps on luffing jib 2316 + midfall 2316 1674

7.23.6 Reeving diagrams for one rope across jib head 2316 (load position1) 1677

7.23.7 Reeving diagrams for one rope across midfall 2316 (load position3) 1679

7.24 Luffing jib 1916 + midfall 1916 1681

LWN/LR.x/V03.01/Auslieferung/2015-06-03/en

copyright by
LIEBHERR

7.24.1 Configuration of jib 1681
7.24.2 Lengths of jib mid-point suspensions 1682
7.24.3 Configuration of main boom 1684
7.24.4 Overview of steel pendant straps on luffing jib 1916 + midfall 1916 1685
7.24.5 Overview of CF pendant straps on luffing jib 1916 + midfall 1916 1687
7.24.6 Reeving diagrams for one rope across jib head 1916 (load position1) 1690
7.24.7 Reeving diagrams for one rope across midfall 1916 (load position3) 1692
7.25 Assembling the luffing jib + Midfall 1694
7.25.1 Notes 1694
7.25.2 Installing the midfall 1694
7.26 Adjusting the track 1700
7.26.1 Converting from wide track to medium or narrow track 1700
7.26.2 Converting from medium or narrow track to wide track 1708
7.27 Hydraulic cab elevation* 1709
7.27.1 Erecting and bolting the mast 1709
7.27.2 Setting the cab in the working position and bolting in place 1711
7.27.3 Dismantling 1712
7.28 Vandalism protection* 1713
7.28.1 Installing the vandalism protection 1713
7.29 Jib luffing winch* 1715
7.29.1 Fixing rope end 1715
7.29.2 Lashing the jib luffing winch 1715
7.29.3 Installation of jib luffing winch 1716
7.29.4 Connect hydraulic lines 1717
7.29.5 Connect the electric cables 1718
7.30 Time-saving reconfiguring of the main boom 1719
7.30.1 Reconfiguring the main boom 1719
7.31 Disassembling the luffing jib + Midfall 1722
7.31.1 Brief summary 1722
7.32 Deinstalling the luffing jib 1723
7.32.1 Preparing the machine 1723
7.32.2 Lowering the jib up to load moment limiter stop 1725
7.32.3 Lowering the jib until wheels touch the ground or bottom jib limit switch is triggered 1726
7.32.4 Lowering the main boom and jib all the way to the ground 1728

LWN/LR.x/V03.01//Auslieferung/2015-06-03/en

copyright by LIEBHERR

7.33 Dismantling the fixed jib 1733
7.33.1 Brief summary 1733
7.34 Disassembling main boom + reducing piece 1735
7.34.1 Brief summary 1735
7.35 Disassembling the main boom 1736
7.35.1 Brief summary 1736
7.36 Disassembling the basic machine 1739
7.36.1 Brief summary 1739

8 Transport 1743
8.1 Loading the basic machine with an assist crane 1743
8.1.1 Loading basic machine with undercarriage with fixed track width 1743
8.1.2 Loading basic machine with undercarriage with adjustable track width 1756
8.2 Transporting the basic machine with a transport vehicle 1768
8.2.1 Transporting basic machine with undercarriage with fixed track width with a transport vehicle 1768
8.2.2 Transporting basic machine with undercarriage* with adjustable track width with a transport vehicle 1771
8.3 Transporting the boom sections 1775
8.3.1 Adjusting and mounting the transport brackets for steel pendant straps 1775
8.3.2 Installing transport brackets for CF pendant straps 1776
8.3.3 Adjusting and mounting transport brackets for connecting links 1777
8.3.4 Insert pendant straps in transport bracket and secure 1778
8.3.5 Securing the pendant straps with transport bracket 1779
8.3.6 Preparing boom components for transport 1780
8.3.7 Transporting the pendant straps 1782

9 Maintenance 1785
9.1 Maintenance and inspection schedule 1785
9.2 Lubricants and consumables 1798
9.2.1 Lubrication diagram 1799
9.2.2 Filling capacity table 1801
9.2.3 Lubrication chart 1802
9.2.4 Diesel engine lubricating oil 1805
9.2.5 Fuel 1806
9.2.6 Urea solution 1806

LWN/LR.x/V03.01//Auslieferung/2015-06-03/en

copyright by LIEBHERR

9.2.7 Diesel engine coolant 1806

9.2.8 Hydraulic oil 1806

9.2.9 Preservation medium (anti-corrosion coating) 1807

9.2.10 Liebherr oil diagnosis system 1809

9.3 Implementation instructions for the maintenance 1812

9.4 Air filter system 1813

9.4.1 Checking the negative pressure indicator 1813

9.4.2 Cleaning the air filter dust ejector 1814

9.4.3 Replacing the dry air filter main element and dry air filter safety element 1814

9.5 Distributor gearbox 1816

9.5.1 Checking the gearbox oil level 1816

9.5.2 Topping up the gearbox oil 1817

9.5.3 Checking the venting valve 1818

9.6 Swing 1819

9.6.1 Checking the gearbox oil level 1819

9.6.2 Topping up the gearbox oil 1819

9.7 Swing connection 1821

9.7.1 Lubricating external teeth 1821

9.7.2 Lubricating the bearing races via the central lubrication point 1821

9.8 winch1/winch2 1823

9.8.1 Checking the gearbox oil level 1823

9.8.2 Topping up the gearbox oil 1824

9.8.3 Lubricating the counter bearing 1824

9.8.4 Checking the rope end fastening for tight fit 1825

9.9 Boom luffing winches 1826

9.9.1 Checking the gearbox oil level 1826

9.9.2 Topping up the gearbox oil 1827

9.9.3 Lubricating the counter bearing 1827

9.9.4 Checking the rope end fastening for tight fit 1828

9.10 Rope reeving winch 1829

9.10.1 Lubricating the counter bearing 1829

9.10.2 Checking rope end attachment for tight fit when starting up rope reeving winch 1829

9.11 Tagline winch 1830

9.11.1 Checking the gearbox oil level 1830

LWN/LR.x/V03.01//Auslieferung/2015-06-03/en

copyright by LIEBHERR

9.11.2 Topping up the gearbox oil 1831

9.11.3 Lubricating the rope bracket on the boom base section and checking pulleys for damage 1831

9.11.4 Checking the rope end fastening for tight fit 1832

9.12 Crawlers 1833

9.12.1 Checking the gearbox oil level 1833

9.12.2 Check gearbox and hydraulic connections for leaks 1834

9.12.3 Cleaning the crawlers 1834

9.12.4 Checking that the crossbeam set screws on the crawler side frames are secure on telescopic undercarriages 1835

9.12.5 Checking the chain tension 1836

9.12.6 Retightening the chain 1837

9.12.7 Release pressure on hydraulic tension jack 1841

9.12.8 Checking locking screws of the track pads axes 1843

9.13 Lifting device 1844

9.13.1 Check transport lashing and round slings for wear (according to EN 1492-2). 1844

9.13.2 Check the round steel chains for wear and damage 1844

9.14 Hook/pulley block 1845

9.14.1 Checking all hooks/pulley blocks for damage, wear, corrosion and widening of the hook aperture 1845

9.14.2 Lubricating bearings and axels 1845

9.14.3 Check that the safety catch is present and working properly 1846

9.15 Hydraulic system 1847

9.15.1 Check the hydraulic system for leaks 1847

9.15.2 Checking the oil cooler for contamination 1847

9.16 Hydraulic oil tank 1848

9.16.1 Carrying out a hydraulic oil analysis 1848

9.16.2 Filling with hydraulic oil 1848

9.16.3 Draining the hydraulic oil 1849

9.16.4 Cleaning the magnetic rod in the return filter 1849

9.17 Hydraulic oil filter 1853

9.17.1 Exchanging the hydraulic oil filter elements 1853

9.18 Hydraulic cylinders 1855

9.18.1 Check that the hydraulic cylinder fits properly and does not leak 1855

9.18.2 Protecting the piston rods of the hydraulic cylinders from corrosion 1855

LWN/LR.x/V03.01/Auslieferung/2015-06-03/en

copyright by LIEBHERR

9.18.3 Preserving the piston rods of the hydraulic cylinders in case of longer periods of non-use 1855

9.19 Hydraulic hoses 1856

9.19.1 Checking the hydraulic hoses 1856

9.20 Bypass filter system 1857

9.20.1 Checking the bypass filter system 1857

9.20.2 Changing the filter elements 1857

9.21 Batteries 1860

9.21.1 Checking the fluid level in the cells 1860

9.21.2 Checking the battery fluid 1860

9.21.3 Exchanging the fuses on the battery 1861

9.22 Lighting 1862

9.22.1 Checking that the cabin lighting, floodlights and auxiliary floodlights are working properly 1862

9.22.2 Changing the cab lamp light bulb 1862

9.22.3 Changing the bulbs of floodlights on the cabin and on the uppercarriage 1862

9.22.4 Changing the bulbs of search floodlights 1865

9.22.5 Changing the bulbs of floodlights on main boom base section 1866

9.22.6 Exchanging the bulbs of floodlights on main boom or jib head 1869

9.23 Rope measuring system 1872

9.23.1 Checking the rope measuring system and height adjustment of all winches (if available) for correct function 1872

9.23.2 Readjusting layer change when changing ropes 1872

9.24 Limit switches 1873

9.24.1 Checking hoist limit switches, boom limit switches and, if necessary, limit switches of the piling and drilling rig to ensure they are working correctly 1873

9.25 Mechanical inclinometer 1874

9.25.1 Checking that the mechanical inclinometer is working properly 1874

9.26 Emergency stop 1875

9.26.1 Checking the emergency stop 1875

9.27 Obstacle warning light* 1876

9.27.1 Check obstacle warning light for function and damage, check mains cable and plug (if available) for damage 1876

9.28 Fire extinguishers 1877

9.28.1 Checking the seals and inspection dates on the fire extinguishers 1877

9.29 Personal protective equipment 1878

LWN/LR.x/V03.01//Auslieferung/2015-06-03/en

copyright by LIEBHERR

9.29.1 Checking personal protective gear 1878

9.30 Safety signs 1879

9.30.1 Checking that all required safety labels are mounted on the machine and are legible 1879

9.31 Access systems and railings 1880

9.31.1 Checking ladders, steps, platforms, and ascents for wear, damage and anti-slip surfaces 1880

9.31.2 Checking latches and hand rails for wear and damage 1880

9.31.3 Checking the spring tension of railing doors 1880

9.31.4 Setting the spring tension of railing doors 1881

9.31.5 Checking the function of the railing stabilization 1883

9.32 Steel structure 1885

9.32.1 Checking the machine steel structure for damage, cracks 1885

9.32.2 Repairs on the steel structure 1886

9.33 Main boom 1888

9.33.1 Check main boom base section, main boom head and main boom sections for damage and wear (cracks, notches, corrosion, plastic deformation, wear) 1888

9.33.2 Boom base section: checking that the knuckle pins and locking elements fit tightly 1889

9.33.3 Boom base section: lubricating knuckle pins 1889

9.33.4 Boom base section or A-frame 1: checking the operation of the mechanical boom angle indicator 1890

9.33.5 Checking the main boom head for function and damage 1891

9.33.6 Checking the anemometer for tight fit and function 1891

9.33.7 Checking the auxiliary jib for function and damage 1892

9.34 Jib 1893

9.34.1 Checking the jib base section, jib head and jib sections for damage and wear 1893

9.34.2 Filling the accumulators for the tilting-back supports on the jib 1893

9.34.3 Checking locking flaps for ease of movement 1899

9.34.4 Jib head: Checking wheels for ease of movement 1900

9.34.5 Checking the anemometer for tight fit and function 1900

9.34.6 Jib base section: Checking screw connections and pin connections for tight fit, checking that rope protection and locking springs are in place and undamaged 1901

9.35 A-frame1 1902

9.35.1 Checking A-frame 1 1902

9.35.2 Lubricating the bearings on A-frame 1 1902

LWN/LR.x/V03.01/Auslieferung/2015-06-03/en

copyright by LIEBHERR

9.35.3 Lubricating the bearings on the A-frame1 cylinder 1903

9.36 Tilting-back supports 1904

9.36.1 Checking the pressure in the tilting-back support piston area 1904

9.37 Steel pendant straps 1906

9.37.1 Checking steel pendant straps and pins for damage and wear and check that locking springs and split pins are present 1906

9.37.2 Checking the ease of movement of pin connections in the entire pendant strap strand 1907

9.37.3 Protecting steel pendant straps, connecting links and pins from corrosion 1907

9.37.4 Checking connecting links for damage and wear 1907

9.37.5 Checking tension load cells for damage and wear, checking electricity connections for tight fit 1907

9.38 Carbon-fibre pendant straps 1909

9.38.1 Checking CF pendant straps and pins for damage and wear and check that locking springs and split pins are present 1910

9.38.2 Checking the ease of movement of pin connections in the entire pendant strap strand 1912

9.38.3 Protecting CF pendant strap bushes, connecting links and pins from corrosion 1912

9.38.4 Checking connecting links for damage and wear 1913

9.38.5 Checking tension load cells for damage and wear, checking electricity connections for tight fit 1913

9.39 Pendant ropes 1914

9.39.1 Check pendant ropes and pins for damage and wear and check that locking springs and cotter pins are present (cracks, notches, corrosion, plastic deformation, wear, lubrication, etc.) 1914

9.39.2 Protecting pendant ropes, connecting links and pins from corrosion 1914

9.39.3 Checking connecting links for damage and wear 1915

9.40 Counterweight 1916

9.40.1 Checking the screws of the rear counterweight tie-down for tight fit (with exception of LR 1001.xx.xx) 1916

9.40.2 Checking the rear counterweight, fixing lugs and round steel chains for damage, wear and secure fit 1916

9.40.3 Checking locking elements for availability, damage, wear and tight fit 1917

9.40.4 Checking counterweight supports (pins, shackles) for damage and wear 1917

9.41 Lubrication system 1918

9.41.1 Checking the function of the central lubrication system 1918

9.41.2 Check fill level of the lubrication pump 1918

9.41.3 Checking the time intervals of the lubrication pump 1919

LWN/LR.x/V03.01//Auslieferung/2015-06-03/en

copyright by LIEBHERR

9.41.4 Checking the lubrication points 1919

9.42 Derrick equipment* 1920

9.42.1 Check derrick boom base section, derrick boom head and derrick boom sections for damage and wear (cracks, notches, corrosion, plastic deformation, wear) 1920

9.42.2 Greasing the bearing of the derrick boom base section 1920

9.42.3 Greasing the extension device of the counterweight carriage (strut, uppercarriage pin connection) 1921

9.42.4 Checking the air pressure of the counterweight carriage 1921

9.42.5 Checking the tires of the counterweight carriage for damage 1922

9.42.6 Lubricating the axes and swing arms of the counterweight carriage's wheel sets 1922

9.42.7 Lubricating the drive units of the counterweight carriage's wheel sets 1923

9.42.8 Checking the gearbox oil level in the counterweight carriage's axle gearbox 1924

9.42.9 Filling in gearbox oil at the counterweight carriage's axle gearbox 1926

9.42.10 Checking the hydraulic cylinders of the counterweight carriage's wheel sets for tightness 1927

9.42.11 Checking the hydraulic connections on the counterweight carriage for tightness 1927

9.42.12 Checking the screws of the counterweight tie-down for tight fit 1928

9.43 Ropes 1929

9.43.1 Check ropes for wear, tight fit and lubrication 1930

9.43.2 Selecting a rope 1939

9.43.3 Storing ropes 1943

9.43.4 Transporting ropes 1943

9.43.5 Winding ropes 1944

9.43.6 Luffing ropes 1946

9.43.7 Putting down the rope of winch1 and winch2 with installed main boom 1947

9.44 rope drive 1955

9.44.1 Checking the rope drive 1955

9.45 Rope pulleys 1957

9.45.1 Checking all pulleys for ease of movement, signs of wear and damage 1957

9.45.2 Lubricating the pulley bearings 1959

9.45.3 Checking the bearing for proper seating and position 1959

9.45.4 Cleaning plastic pulleys 1960

9.46 Rope suspension and rope fixation 1961

LWN/LR.x/V03.01/Auslieferung/2015-06-03/en

copyright by LIEBHERR

	9.46.1	Checking rope suspensions (rope clamps, rope thimbles) for wire breaks, absence of corrosion and tight fit of screw fittings	1961
	9.46.2	Checking the pocket locks	1962
	9.46.3	Checking the rope end fittings for cracks	1963
	9.46.4	Checking the rope fixing point	1964
9.47	Cab		1965
	9.47.1	Check the windows of the cab for damage	1965
	9.47.2	Checking that the cab door and the door lock work properly	1965
	9.47.3	Check cabin roof protection guard for damage, locking (in case of foldable design)	1965
	9.47.4	Changing the windscreen wipers	1965
	9.47.5	Filling the windscreen cleaning system	1966
	9.47.6	Checking outside mirrors and inside mirrors for damage	1967
	9.47.7	Checking the operation of the hydraulic cab tilting device and for damage	1967
	9.47.8	Checking hydraulic cabin elevation for function and damage	1968
	9.47.9	Cleaning or replacing the filter insert in the cabin	1969
9.48	Ventilation, heating and air-conditioning		1971
	9.48.1	Checking the recirculated air filter for contamination	1971
	9.48.2	Replacing the recirculated air filter	1972
	9.48.3	Checking the fresh air filter for contamination	1973
	9.48.4	Replacing the fresh air filter	1974
	9.48.5	Checking the coolant level in the inspection glass	1975
	9.48.6	Checking the condenser for contamination	1977
	9.48.7	Checking the condenser for loose leads, loos screws and corrosion	1978
	9.48.8	Checking the fan on condenser for function, tight fit and damage	1978
	9.48.9	Checking the climate box for contamination	1979
	9.48.10	Checking the dryer for damage and corrosion	1979
	9.48.11	Starting the ventilation, heating, air conditioning, external air conditioning system* and auxiliary heating system* and ensuring that sufficient antifreeze has been added to the water circuit	1980
	9.48.12	Replacing the fuel filter of auxiliary water heating	1982
9.49	HATZ diesel engine* (see operation manual of the engine manufacturer on CD)		1985
	9.49.1	Checking the belt drive	1985
	9.49.2	Replacing the belt drive including vibration damper, deflection pulley and springs	1985
9.50	Machine care		1986

LWN/LR.x/V03.01//Auslieferung/2015-06-03/en

copyright by LIEBHERR

9.50.1 Cleaning the machine 1986
9.50.2 Preserving the machine 1987

LWN/LR.x/V03.01//Auslieferung/2015-06-03/en

copyright by
LIEBHERR

Product description 1

1 Product description

1 Product description

The chapter **Product description** deals with the following issues:
- Application options of the machine
- Wrong or improper use of the machine
- Machine components
- Technical data

The illustrations in this operation manual are for general information purposes. They may be shown as diagrams and do not necessarily correspond to the current machine setup.

1.1 Type plate

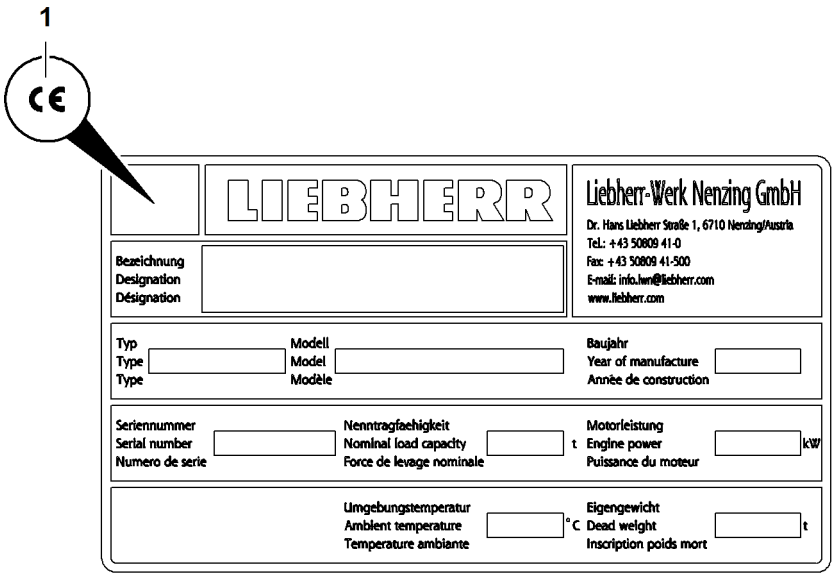

Fig. 1: Type plate (illustration of principle)

1 CE label

If the machine corresponds to guideline 2006/42/EU, the type plate bears the CE label **1**.

LWN/LR.x/V03.01//Auslieferung/2015-06-03/en

copyright by
LIEBHERR

1.2 Declaration of conformity

Right behind the cover sheet, the documentation contains the EU declaration of conformity in acc. with guideline 2006/42/EU when delivering the machine with CE label. The EU declaration of conformity in its present version and language is valid in all countries of the European Union as well as in countries that recognize the guideline 2006/42/EU. Additional documentation may also be enclosed like documents relating to a prototype test or an international approval test. The test report for individual verification is archived with the manufacturer and can be requested if required.

LWN/LR.x/V03.01//Auslieferung/2015-06-03/en

copyright by
LIEBHERR

1.3 Appropriate use

The supplied equipment determines the possible applications of the machine.

The machine is classified in crane group A1 in acc. with ISO 4301-1.

The machine is only designed and constructed for the intended use stated and described in the operation manual.

The machine may only be operated in admissible setup condition and mode.

Special machine tasks that deviate from the tasks described in the operation manual must be coordinated with the machine manufacturer beforehand.

Intended use of the machine is a basic requirement of safe operation.

Non-observation of the intended machine use results in grave consequences:
– Life-threatening or fatal injuries
– Severe damage to the machine, assets or contamination of the environment for which the manufacturer of the machine cannot be held liable.
– Loss of warranty and guarantee claims

Utilization not described in the operation manual must be authorized in writing by the manufacturer. Any other use of the machine without written consent of the manufacturer is deemed inappropriate use.

Appropriate use of the machine is exclusively defined as follows:
– Utilization in the work areas and on the conditions of use listed and described in the operation manual.
– Use of exchangeable equipment provided or approved by the machine manufacturer.
– Moving the machine without load with rigging equipment in line with the admissible load chart with supervision of a signalman.
– Moving the machine with lifted load in line with the admissible load chart with supervision of a signalman.
– A signalman must observe travelling of the machine within the admissible travelling range with suspended and admissible load and in admissible position of the uppercarriage and the boom.
– Lifting and lowering as well as horizontal transport of loads with the corresponding rigging equipment whose mass and center of gravity is known.

Appropriate use the machine observing the following specifications and requirements:
– Complete safety equipment is installed and functioning properly.
– All maintenance and repair work stated in the maintenance and inspection plan of the operation manual was performed according to specifications by qualified maintenance personnel or authorized qualified personnel.
– All safety instructions in this operation manual are being observed.
– All valid national and international safety regulations (e.g. oil or gas industry) are observed by the operator, if applicable.
– The operating materials listed in the operation manual are being used.
– All persons involved meet the requirements on staff according to the operation manual.
– All persons involved meet their responsibilities according to the operation manual.
– The technical information values are being observed.
– Load charts are being observed.
– The machine is operated exclusively with the rigging equipment approved by the manufacturer under consideration of the corresponding mode and load

LWN/LR.x/V03.01//Auslieferung/2015-06-03/en

copyright by
LIEBHERR

curve and observation of the operation manual, warning and safety equipment and the valid load chart.
- Operational restrictions are being observed.
- “ISO 12480-1 Cranes-Safe use-Part 1: General” is observed with respect to lifting gear.
- Intended and inappropriate use of the exchangeable equipment is being observed.

LWN/LR.x/V03.01//Auslieferung/2015-06-03/en

copyright by
LIEBHERR

1.4 Special modes of operation

The following applies to special modes of operation:
- Special modes of operation may significantly reduce the service life of the machine.
- Special operating modes may result in excessive stress on the machine causing premature damage.
- Special modes of operation are the sole responsibility of the machine operator.
- Special modes of operation may result in undefined loading conditions with high dynamic stresses and excessive diagonal pulls, which may lead to immediate or early damage.

Special modes include:
- Vibrator mode or hammer mode
  - Leader-mounted vibrators and hammers
  - Free-hanging vibrators and hammers
  - Vibrator lances/probes
- Installation of exchangeable equipment:
  - Fixed leader
  - Swinging leader
  - Crane mount drill
- Free-fall operation
- Utilization on floating constructions

Note

▶ For more information regarding special modes of operation: contact Liebherr service department.

LWN/LR.x/V03.01//Auslieferung/2015-06-03/en

copyright by
LIEBHERR

1.5 Inappropriate use

Inappropriate use of the machine includes any reasonably foreseeable misuse in line with the machine directive 2006/42/EG.

Use of the machine is deemed not according to purpose under the following conditions:

- Any structural modification of the machine and equipment that affects operational safety and that has been carried out without the written declaration of approval of the manufacturer.
- Installation of spare parts and use of media or exchangeable equipment not approved and authorized by the manufacturer.
- Operation of the machine outside of the limit values approved by the machine's manufacturer, like e.g. ambient temperature range, load chart (load/radius), wind speed, operating restrictions and diagonal pull.
- Start-up or operation of the machine without knowledge of the operation manual and/or without qualification of the machine operator demanded by national regulations.
- Start-up or operation of the machine if operation is not admissible according to the specifications of the machine's location due to explosion hazard indicated on the machine's type plate.
- Machine operator does not possess the necessary skills to comprehend the operation manual.
- Start-up or operation of the machine by persons not authorized by the operator.
- Any kind of work with the machine that endangers operational safety.
- Start-up or operation of the machine without approval test or recurring inspection if this is prescribed by national or international directives and standards.
- Start-up or operation of the machine without properly installed or not properly functioning safety installations and safety equipment.
- Performance of repairs not authorized by the manufacturer.
- Bypass or conversion of the required safety installations set in the factory.
- Transport of persons along with the load or with rigging equipment not intended for this purpose.
- Operation of the machine in an unapproved mode.
- Operation of the machine with open cabin door.
- Pulling or dragging a load on the ground.
- Breakaway of stuck loads under slack rope or with other components besides the hoisting gear intended for this purpose.
- Breakaway of stuck tools, rigging equipment or equipment parts (e.g. drilling equipment, piling equipment or grab).
- Start-up or operation of the machine if other persons apart from the machine operator are located outside of the cabin or on the machine.
- Start-up or operation of the machine with incomplete operation manual (e.g. missing or illegible pages).
- Start-up or operation of the machine of the operation manual is not available in the contractually agreed language.
- Lifting of loads attached to several load lifting devices without consideration of ISO 12480-1.
- Lifting of persons with the exception of machines with valid EC-type examination certificate and the corresponding machine configuration or approval by national authorities.
- Lifting of persons for entertainment purposes, for example shows, “bungee jumping”, “suspended restaurants” or lifting of other devices on or beneath which persons are located.

LWN/LR.x/V03.01/Auslieferung/2015-06-03/en

copyright by
LIEBHERR

- Use of the machine in special modes not listed in the operation manual, not approved by the manufacturer and without the corresponding adaptations on the machine.
- Tilting the machine.
- Use of the machine on uneven, undulating, non-compacted, soft ground or on ground not suited for the arising pressure.
- Moving the machine without adequate vision and without signalman.
- Use of the machine as tractor with the exception of machines with towing attachment or drawbar eye under observation of the admissible supported loads, trailing loads or trailer loads.
- Increasing the mass of already lifted loads.
- Operation of the machine not in conformity with the current machine configuration (e.g. counterweight weights, boom components, reeving) with the programed setup.
- Lifting of loads in emergency mode (except for failure of the energy supply).
- Lifting loads on the ground with other components/kinematics than the hoisting gear intended for this purpose.
- Start-up or operation of the machine below ground (mining).
- Initial start-up of machine.
- Use of the machine for earth-moving work (e.g. leveling).
- Sea travel without observation of the specifications in the operation manual.
- Operation of the machine in assembly mode or with activated assembly functions instead of the mode intended for operation.
- Operation of machine above the specified crane group without reduction of loads.
- Installation of exchangeable equipment (e.g. fixed leader, swinging leader or crane mount drills) not previously agreed with the manufacturer.

LWN/LR.x/V03.01//Auslieferung/2015-06-03/en

copyright by
LIEBHERR

1.6 Machine

1.6.1 Machine overview

Machine without derrick equipment*

The diagram below provides an overview of the machine components.

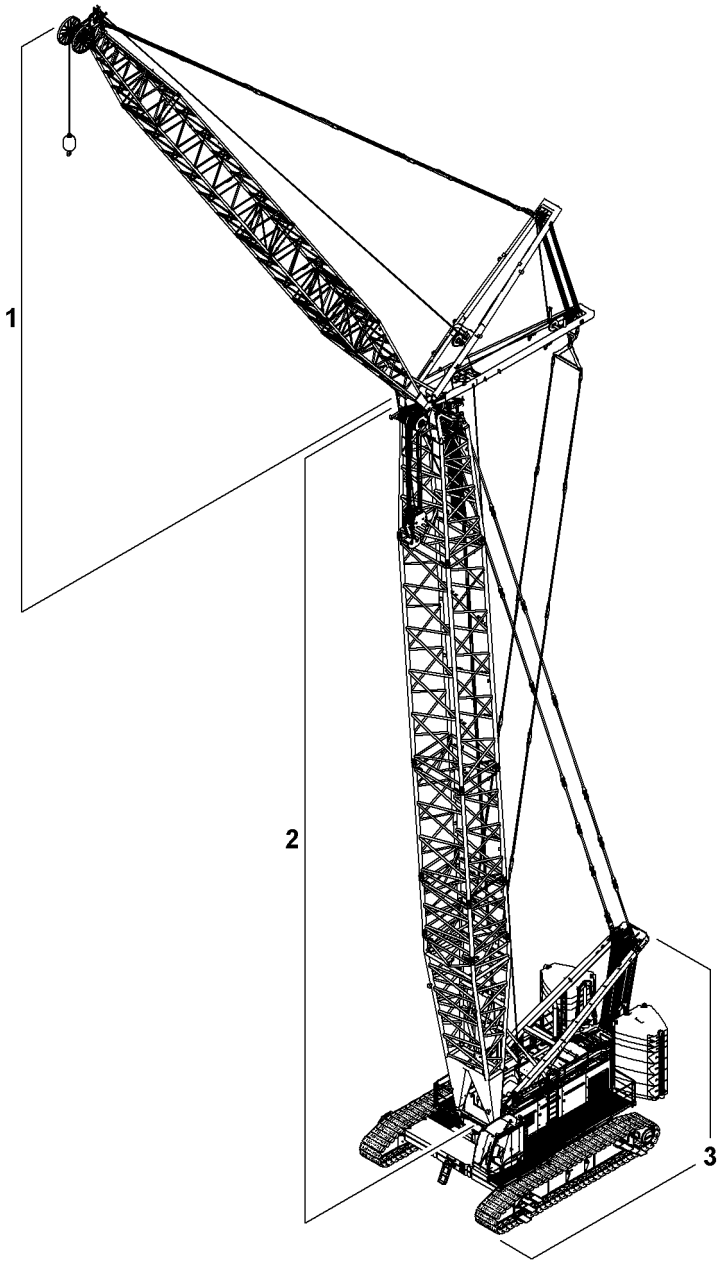

*Fig. 2: Machine without derrick equipment**

1 Fixed jib or luffing jib
2 Main boom
3 Basic machine

LWN/LR.x/V03.01//Auslieferung/2015-06-03/en

copyright by
LIEBHERR

Machine with derrick equipment*

The diagram below provides an overview of the machine components with derrick equipment.

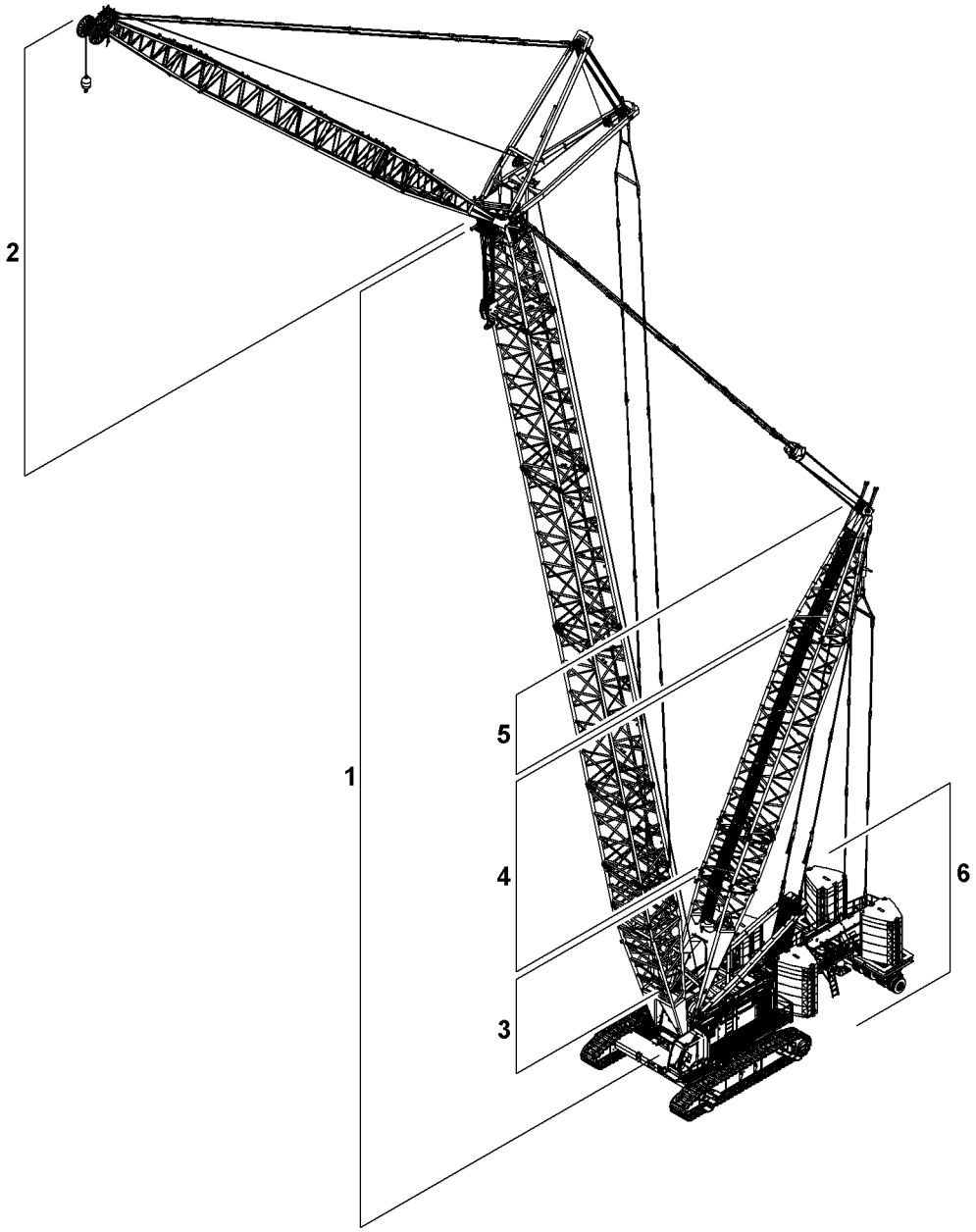

*Fig. 3: Machine with derrick equipment**

1	Main boom	**4**	Derrick boom sections
2	Fixed jib or luffing jib	**5**	Derrick boom head
3	Derrick boom base section	**6**	Suspended counterweight or counterweight carriage

LWN/LR.x/V03.01//Auslieferung/2015-06-03/en

copyright by
LIEBHERR

1.6.2 Technical data

Application conditions

Ambient temperatures

Name	Value
Storage	-40 °C (-40 °F) to 40 °C (104 °F)
Operation	-20 °C (-4 °F) to 40 °C (104 °F)
Operation at low temperatures*	down to -25 °C (-13 °F) (For more information see: 2.15.2 Operation of the machine down to -25 °C (-13 °F)*, page 599)
	down to -40 °C (-40 °F) (For more information see: 2.15.3 Operation of the machine down to -40 °C (-40 °F)*, page 599)

Tab. 1: Technical data ambient temperatures

Application height

The exhaust gas turbocharger of the diesel engine reduces the influence of falling air pressure on the engine output at high altitude. Still, a performance reduction is to be expected with the diesel engine when operating the machine at high altitude above sea level and at high air temperatures.

When using the machine at high altitudes above sea level: The diesel engine control unit adjusts the engine characteristic curve automatically. A membrane located on the side of the control unit measures air pressure.

Emissions

Noise measurement data

Name	Value
Guaranteed sound pressure level L_{PA} in cabin	72.4 dB(A) 72.4 db(A)
Guaranteed sound output level L_{WA} of machine	see notice signs on cabin

Tab. 2: Technical data noise measurement data

The noise measurement data was determined in accordance with the standard EN 13000 Appendix G.

LWN/LR.x/V03.01//Auslieferung/2015-06-03/en

copyright by
LIEBHERR

Reflections may increase the sound pressure level by 5 dB(A) (5 db(A)) to 10 dB(A) (10 db(A)) when working in confined spaces.

Vibrations

Name	Value
Vibrations on the upper limbs of the machine operator	< 2.5 m/s² (8.2 ft/s²)
Vibrations on entire body of machine operator	< 0.5 m/s² (1.64 ft/s²)

Tab. 3: Technical data vibrations

The measuring inaccuracy is defined in standard EN 12096:1997, table D.1 “Inaccuracy K for various measured values a”.

Diesel engine

Name	Value
Type	D 946 A7 04
Manufacturer	Liebherr-Machines Bulle S.A
For further information please refer to the operation manual of the engine manufacturer on CD.	

Tab. 4: Technical data diesel engine

Interfaces

External power supply obstacle warning light*

Name	Value
Nominal voltage	AC 230 V, 50 Hz, ±15 %
	AC 115 V, 60 Hz, ±15 %
Phases	1 + N + PE
(For more information see: 1.43.1 External power supply obstacle warning light, page 434)	

Tab. 5: Technical data external power supply obstacle warning light

External power supply low temperature package*

Name	Value
Nominal voltage	AC 230 V, 50 Hz, ±15 %
	AC 115 V, 60 Hz, ±15 %
Phases	3 + N + PE

LWN/LR.x/V03.01//Auslieferung/2015-06-03/en

copyright by
LIEBHERR

Name	Value
(For more information see: 1.43.2 External supply low temperature package, page 436)	

Tab. 6: Technical data external power supply low temperature package

Lubricants and consumables

Detailed information about lubricants and consumables (For more information see: 9.2 Lubricants and consumables, page 1798) .

Winches

winch1/winch2

Winch1/winch2	as crane winch	as free-fall winch
Nominal line pull (7th layer)	150 kN 33,720 lb_f	130 kN 29,230 lb_f
Rope ∅	28 mm 1.10“ in	28 mm 1.10“ in
Drum ∅	730 mm 2‘ 5“ ft-in	730 mm 2‘ 5“ ft-in

Tab. 7: Technical data winch1/winch2

A) The load moment limiter (LML) limits the line pull in crane operation to a nominal value of 150 kN (33,720 lb_f). The nominal line pull must not be exceeded.

WARNING
Operating winches in the 8th rope layer is not permitted!
Severe injuries, damage to machine.

▶ Only ever wind the rope to the eighth layer for transport purposes.

Rope layer(s)	Winding length	Remark
1	7 m 23‘ ft-in	3 safety windings
1	62 m 203‘ 5“ ft-in	Effective length with 1 rope layer
2	135 m 442‘ 11“ ft-in	Effective length with 2 rope layers
3	213 m 698‘ 10“ ft-in	Effective length with 3 rope layers
4	296 m 971‘ 2“ ft-in	Effective length with 4 rope layers
5	383 m 1256‘ 7“ ft-in	Effective length with 5 rope layers
6	474 m 1555‘ 1“ ft-in	Effective length with 6 rope layers

LWN/LR.x/V03.01//Auslieferung/2015-06-03/en

copyright by
LIEBHERR

Rope layer(s)	Winding length	Remark
7	571 m 1873‘ 4“ ft-in	Total effective length

Tab. 8: Technical data winch1/winch2

Main boom luffing winch

Name	Value
Nominal line pull (1st layer)	180 kN 40,470 lb_f
Rope ∅	24 mm 0.94“ in
Drum ∅	480 mm 1‘ 7“ ft-in
Rope length	441 m 1446‘ 10“ ft-in

Tab. 9: Technical data main boom luffing winch

Jib luffing winch

Name	Value
Nominal line pull (5th layer)	82 kN 18,430 lb_f
Rope ∅	20 mm 0.79“ in
Drum ∅	490 mm 1‘ 7“ ft-in
Rope length	385 m 1263‘ 1“ ft-in A)

Tab. 10: Technical data jib luffing winch

A) When fitting the luffing jib 1916, it is admissible up to a main boom length of 71 m (232‘ 11“ ft-in) to use the rope of the jib luffing winch with a length of 310 m (1017‘ 1“ ft-in). As of a main boom length of 74 m (242‘ 9“ ft-in) the rope of the jib luffing winch with a length of 385 m (1263‘ 1“ ft-in) must be used.

Rope reeving winch*

Name	Value
Nominal line pull (7th layer)	17.5 kN 3,930 lb_f
Rope ∅	8 mm 0.31“ in
Drum ∅	198 mm 7.80“ in

LWN/LR.x/V03.01//Auslieferung/2015-06-03/en

copyright by
LIEBHERR

Name	Value
Rope length	240 m 787‘ 5“ ft-in

Tab. 11: Technical data rope reeving winch

Swing

Name	Value
Maximum rotation speed	2 min^{-1} 2 rpm

Tab. 12: Technical data swing gear

Crawler

Name	Value
Maximum travel speed	1.22 km/h 1 mph
Pull force machine	1893 kN 425,570 lb_f
Climbing ability with reduced load (see load chart)	maximum 1 %

Tab. 13: Technical data crawler

When travelling on inclines with a main boom and jib but no load, the gradient limits relating to the climbing ability of the machine are shown in the following tables in the “Work planning” section (For more information see: 6 Operational planning, page 1045) .

LWN/LR.x/V03.01//Auslieferung/2015-06-03/en

1.6.3 Safety equipment

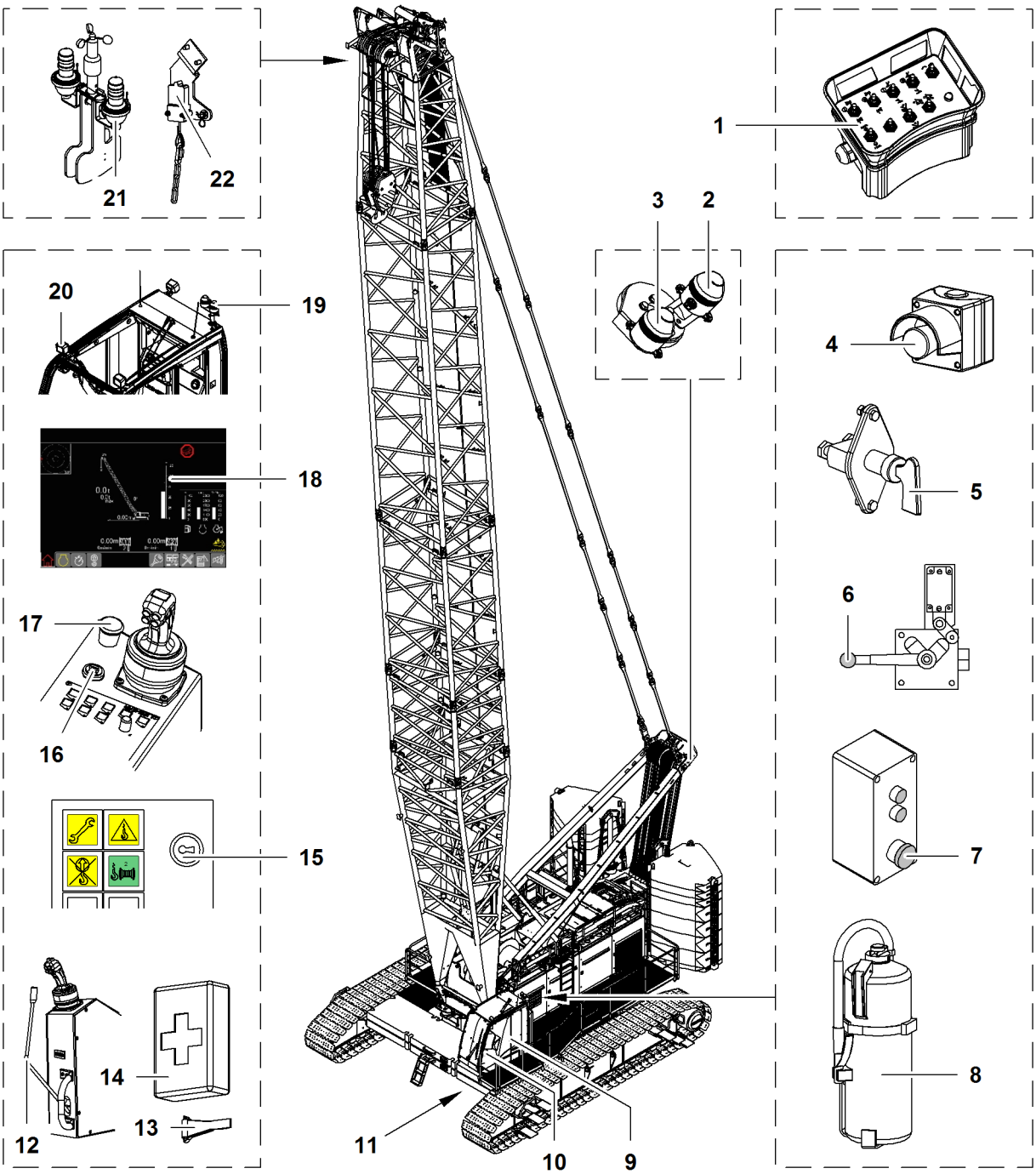

Fig. 4: Safety equipment

1	Emergency control system*	**9**	Door arrester	**17**	Emergency stop (cabin)
2	Load moment limiter lamp	**10**	Door lock	**18**	Display load moment utilization on the monitor
3	Flashing light	**11**	Vehicle horn, load moment limiter horn and acoustic signaling device	**19**	Load moment limiter lamp and flashing light
4	Emergency stop (engine compartment)	**12**	Safety lever	**20**	Floodlight (3x)
5	Main battery switch	**13**	Emergency hammer	**21**	Obstacle warning light*

See next page for continuation of the image legend

LWN/LR.x/V03.01//Auslieferung/2015-06-03/en

copyright by
LIEBHERR

6 Gate valve *free-fall operation*
7 Emergency stop (refueling pump)
8 Fire extinguisher (2x)
14 First-aid box
15 Lock of control panel *X12*
16 Ignition lock (ignition key)
22 Hoist limit switch (2x)

Note
Fire extinguishers are subject to national regulations!

▶ Arrange for the plant operator to provide fire extinguishers, replace them as necessary and inspect them periodically.

1.6.4 Monitoring installations

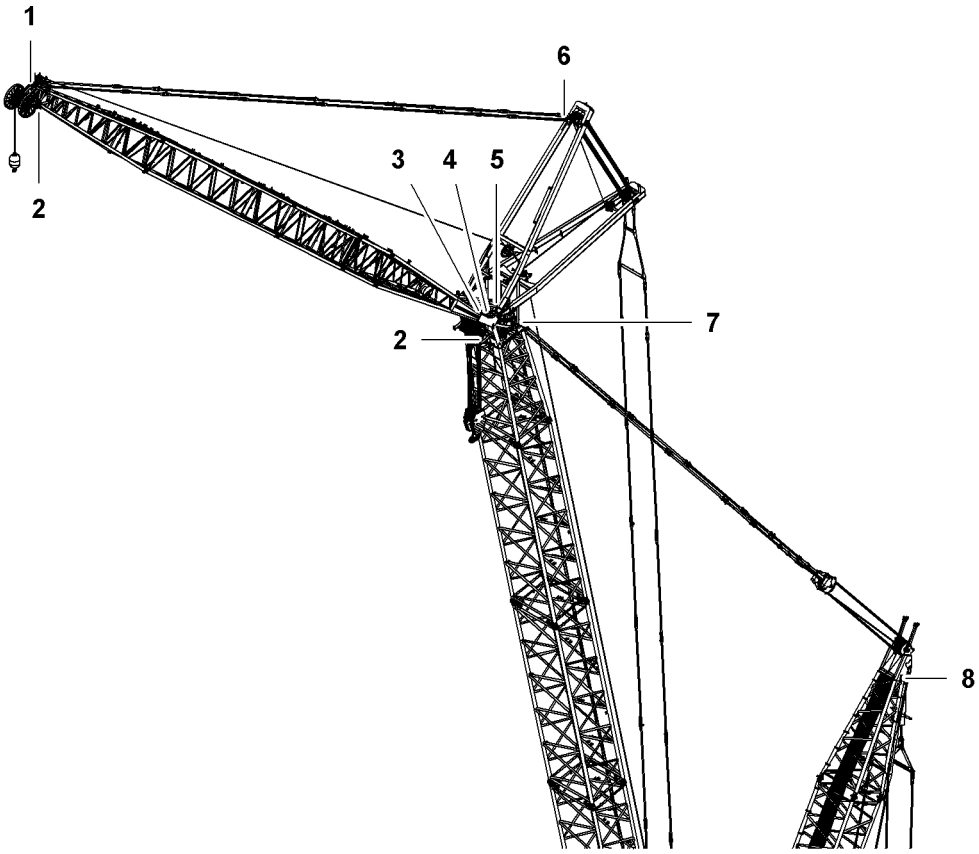

Fig. 5: Monitoring installations on the boom

1 Anemometer
2 Hoist limit switch
3 Jib, bottom limit switch
4 Jib, top limit switch
5 Proximity switch for locking flaps
6 Tension load cell (2x)
7 Tension load cell (2x)
8 Tension load cell (2x)

LWN/LR.x/V03.01//Auslieferung/2015-06-03/en

copyright by
LIEBHERR

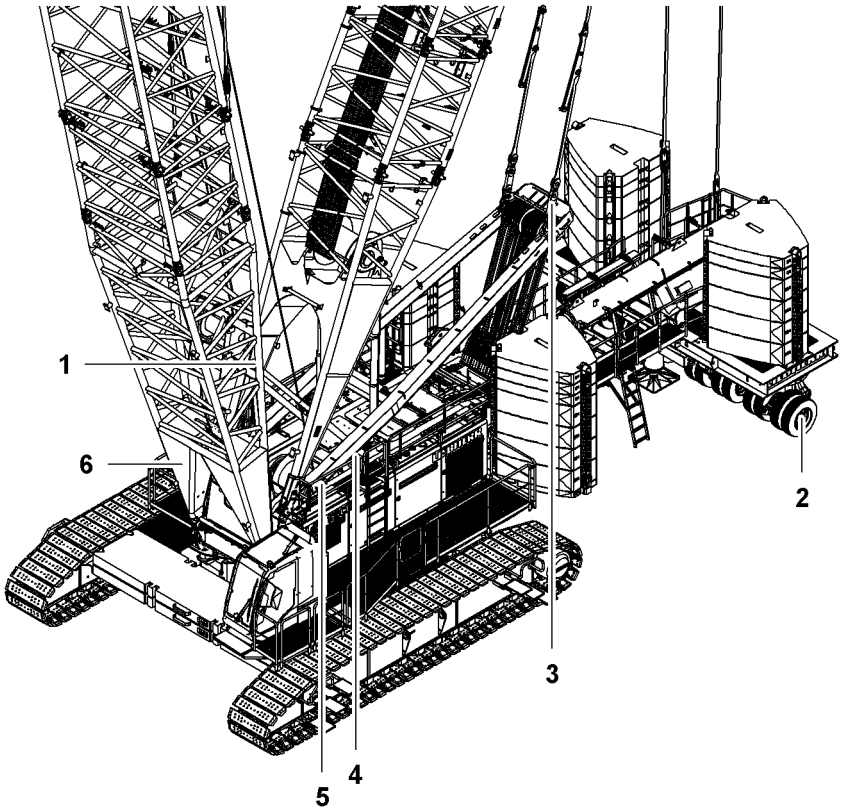

Fig. 6: Monitoring installations on basic machine

1	Control switch tilting-back supports	**4**	3-windings limit switch (on all winches)
2	Angle sensor (on each wheel set)	**5**	Mechanical angle indicator
3	Tension load cell (2x)	**6**	Main boom, top limit switch

LWN/LR.x/V03.01//Auslieferung/2015-06-03/en

copyright by
LIEBHERR

1.7 Basic machine

1.7.1 Basic machine overview

Basic machine with undercarriage with fixed track width

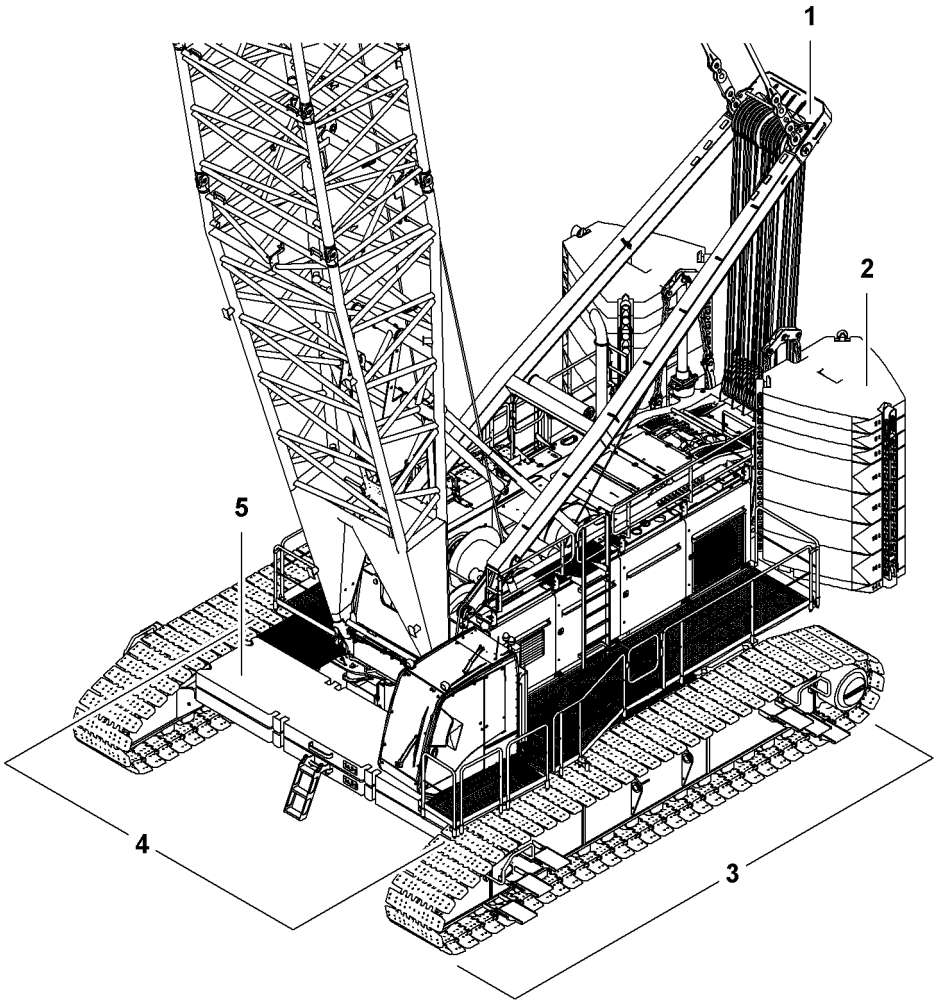

Fig. 7: Basic machine with undercarriage with fixed track width

1 A-frame1
2 Rear counterweight
3 Undercarriage
4 Uppercarriage
5 Carbody counterweight

LWN/LR.x/V03.01//Auslieferung/2015-06-03/en

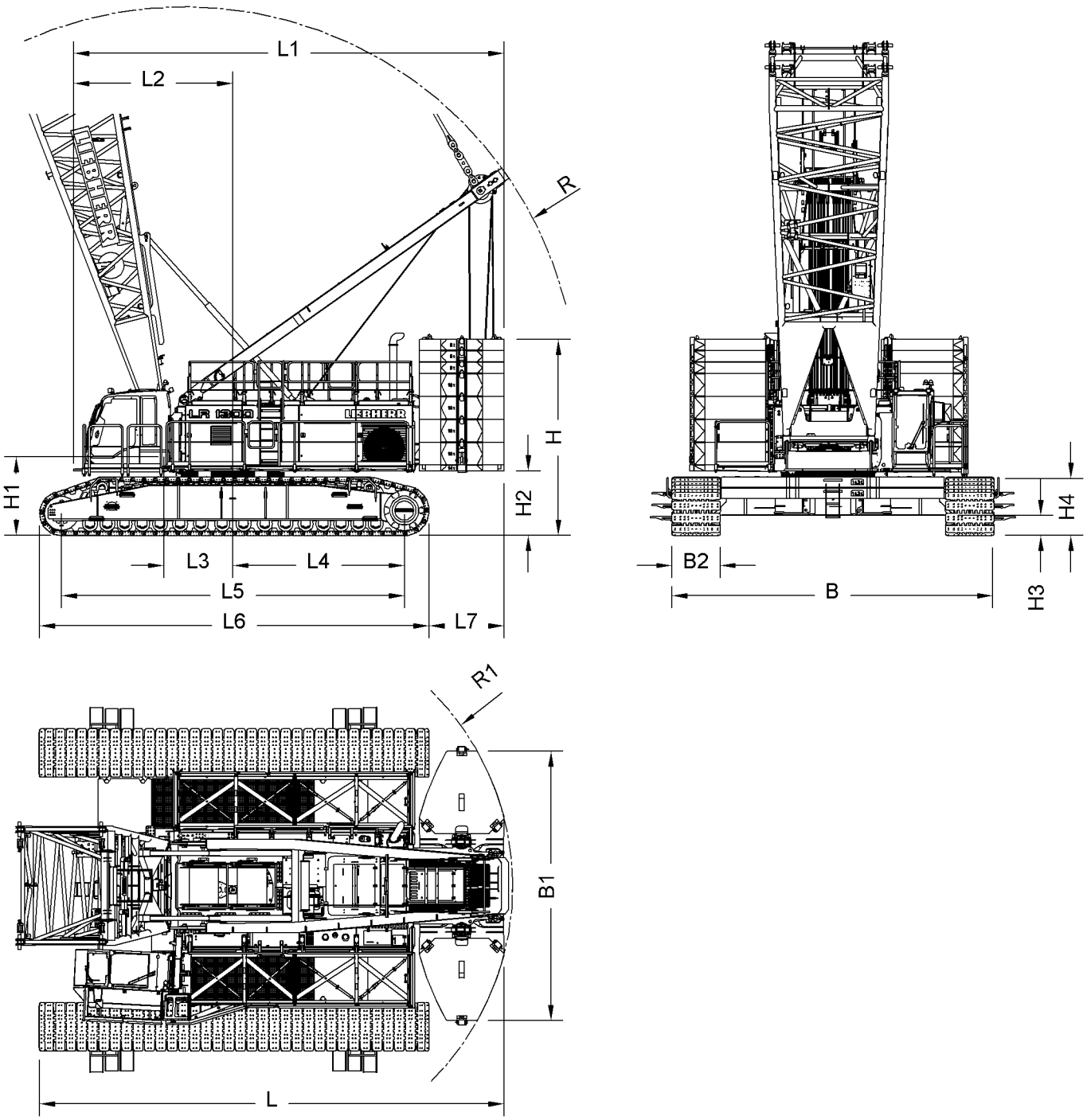

Fig. 8: Dimensions basic machine with undercarriage with fixed track width

Name		Value
L	Length basic machine	11560 mm 37‘ 11“ ft-in
B	Width basic machine	8000 mm 26‘ 3“ ft-in
H	Height basic machine with maximum rear counterweight	5000 mm 16‘ 5“ ft-in
Detailed dimensions:		

LWN/LR.x/V03.01//Auslieferung/2015-06-03/en

copyright by
LIEBHERR

Name		Value
L1	Length uppercarriage with rear counterweight	10700 mm 35‘ 1“ ft-in
L2	Rotation axis to front edge of cabin	3960 mm 13‘ ft-in
L3	Rotation axis to pivot point of main boom base section	1700 mm 5‘ 7“ ft-in
L4	Rotation axis to center of tumbler	4260 mm 14‘ ft-in
L5	Wheelbase (center idler wheel to center tumbler)	8520 mm 27‘ 11“ ft-in
L6	Length crawler side frame	9700 mm 31‘ 10“ ft-in
L7	Rear edge crawler side frame to rear edge rear counterweight	1870 mm 6‘ 2“ ft-in
B1	Width rear counterweight	6930 mm 22‘ 9“ ft-in
B2	Width base plates	1200 mm 3‘ 11“ ft-in
H1	Height main boom base section pivot point	2250 mm 7‘ 5“ ft-in
H2	Ground clearance rear counterweight	1600 mm 5‘ 3“ ft-in
H3	Ground clearance undercarriage	500 mm 1‘ 8“ ft-in
H4	Height crawler side frame	1460 mm 4‘ 9“ ft-in
R	A-frame1 swing radius	9750 mm 32‘ ft-in
R1	Rear counterweight swing radius	6980 mm 22‘ 11“ ft-in
Dimensions basic machine with 1500 mm (4‘ 11“ ft-in) base plates:		
B(1500)	Width basic machine with 1500 mm (4‘ 11“ ft-in) base plates	8300 mm 27‘ 3“ ft-in
B2(1500)	Width 1500 mm (4‘ 11“ ft-in) base plates	1500 mm 4‘ 11“ ft-in
H4(1500)	Height crawler side frame with 1500 mm (4‘ 11“ ft-in) base plates	1485 mm 4‘ 10“ ft-in

Tab. 14: Technical data basic machine with undercarriage with fixed track width

LWN/LR.x/V03.01//Auslieferung/2015-06-03/en

copyright by
LIEBHERR

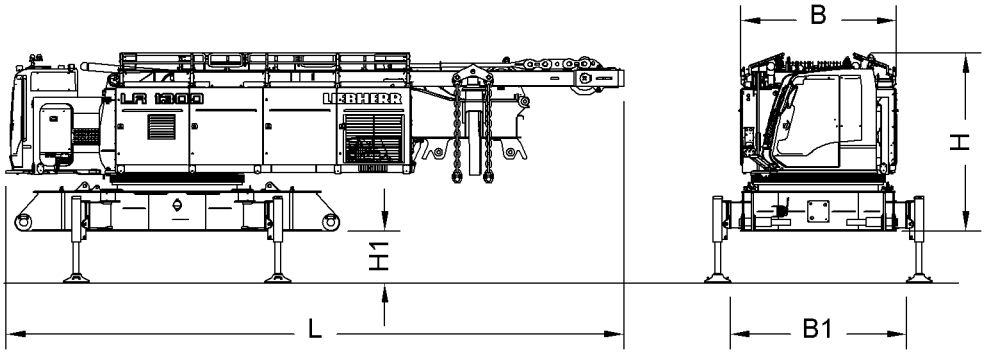

Fig. 9: Dimensions of basic machine in transport position on jacks

Name		Value
L	Length basic machine in transport position	11850 mm 38‘ 11“ ft-in
B	Width basic machine in transport position	2990 mm 9‘ 10“ ft-in
H	Height basic machine in transport position	3400 mm 11‘ 2“ ft-in
Detailed dimensions:		
B1	Width between support pads	3360 mm 11‘ ft-in
H1	Ground clearance basic machine	975 mm 3‘ 2“ ft-in
	Ground clearance basic machine with telescopic jack	1415 mm 4‘ 8“ ft-in

Tab. 15: Technical data basic machine in transport position on jacks

LWN/LR.x/V03.01//Auslieferung/2015-06-03/en

copyright by
LIEBHERR

Basic machine with undercarriage* with adjustable track width

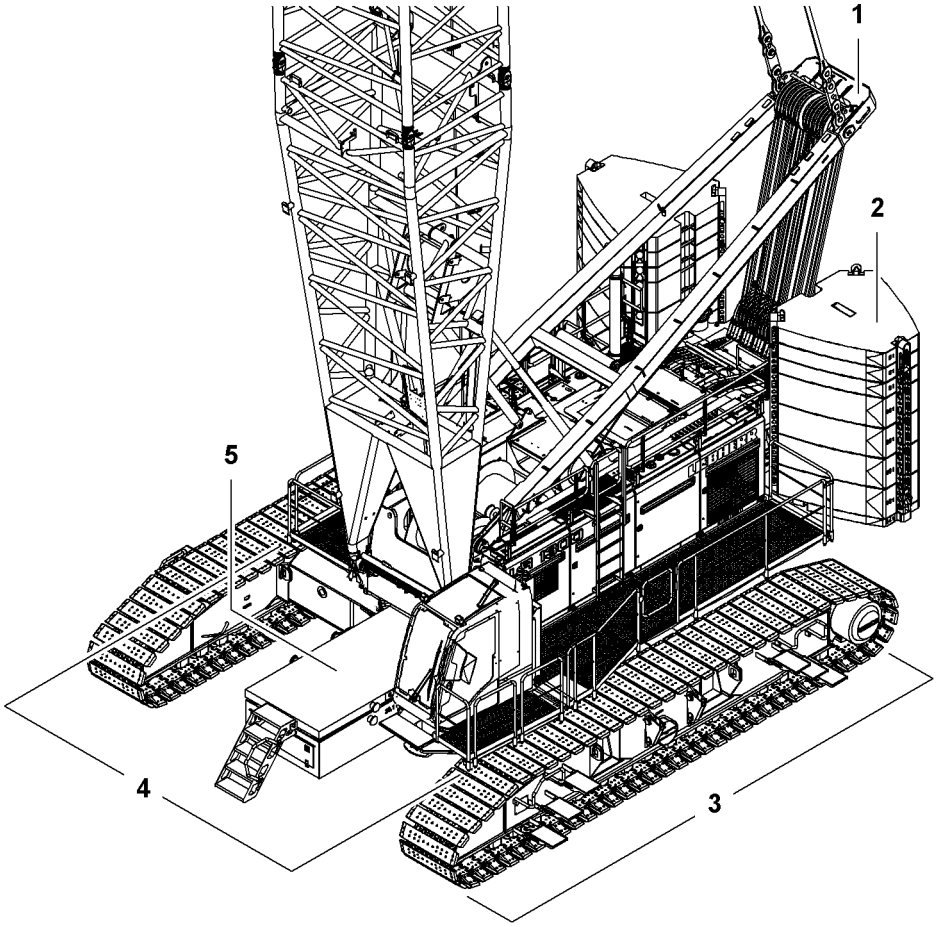

Fig. 10: Basic machine with undercarriage with adjustable track width*

1 A-frame1
2 Rear counterweight
3 Undercarriage
4 Uppercarriage
5 Carbody counterweight

LWN/LR.x/V03.01//Auslieferung/2015-06-03/en

copyright by
LIEBHERR

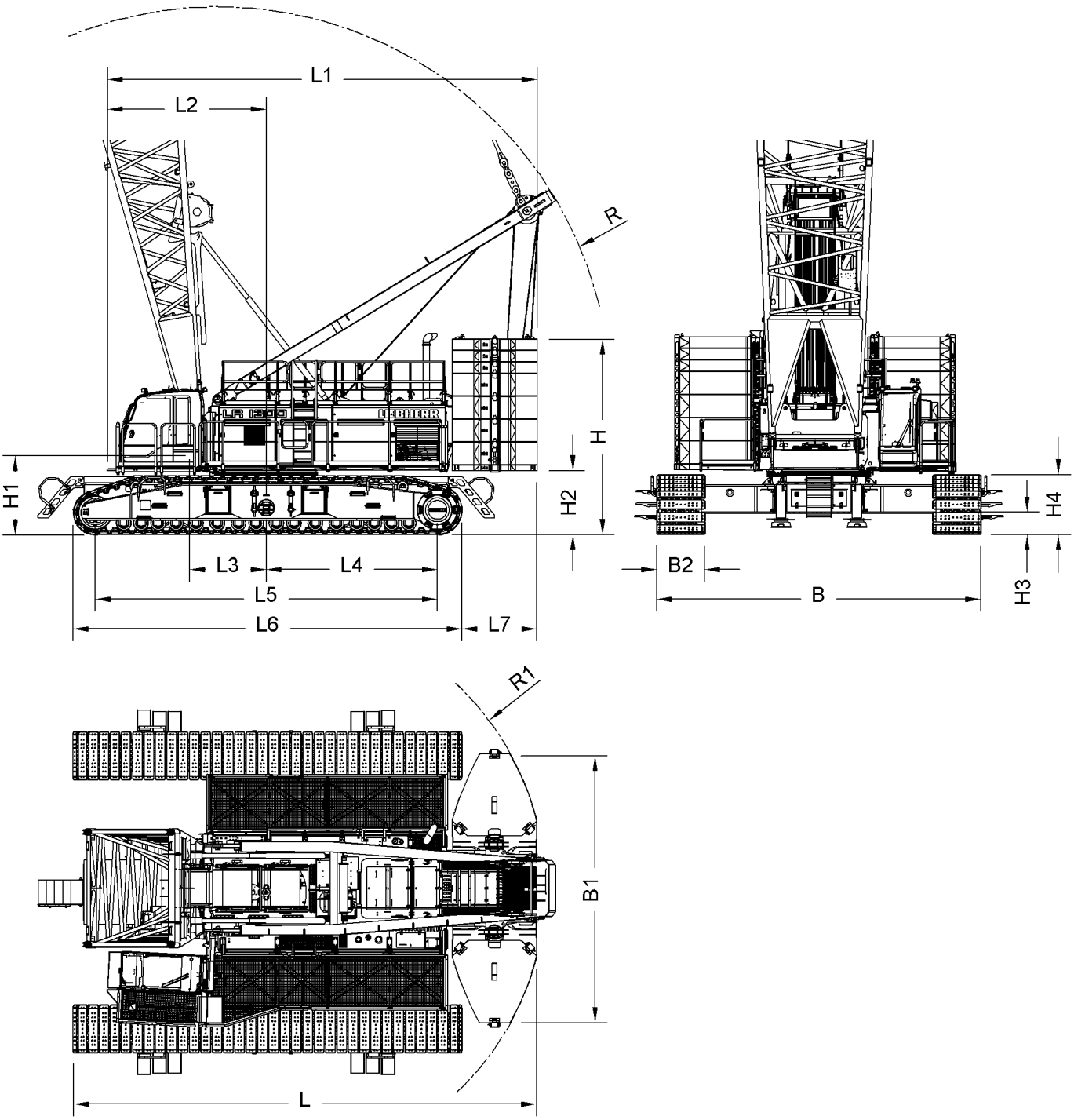

Fig. 11: Dimensions basic machine with undercarriage with adjustable track width*

Name		Value
L	Length basic machine	11560 mm 37‘ 11“ ft-in
B	Width basic machine	8000 mm 26‘ 3“ ft-in
H	Height basic machine with maximum rear counterweight	5160 mm 16‘ 11“ ft-in
Detailed dimensions:		

LWN/LR.x/V03.01//Auslieferung/2015-06-03/en

copyright by
LIEBHERR

Name		Value
L1	Length uppercarriage with rear counterweight	10700 mm 35‘ 1“ ft-in
L2	Rotation axis to front edge of cabin	3960 mm 13‘ ft-in
L3	Rotation axis to pivot point of main boom base section	1700 mm 5‘ 7“ ft-in
L4	Rotation axis to center of tumbler	4260 mm 14‘ ft-in
L5	Wheelbase (center idler wheel to center tumbler)	8520 mm 27‘ 11“ ft-in
L6	Length crawler side frame	9683 mm 31‘ 9“ ft-in
L7	Rear edge crawler side frame to rear edge rear counterweight	1870 mm 6‘ 2“ ft-in
B1	Width rear counterweight	6930 mm 22‘ 9“ ft-in
B2	Width base plates	1200 mm 3‘ 11“ ft-in
H1	Height main boom base section pivot point	2400 mm 7‘ 10“ ft-in
H2	Ground clearance rear counterweight	1760 mm 5‘ 9“ ft-in
H3	Ground clearance undercarriage	520 mm 1‘ 8“ ft-in
H4	Height crawler side frame	1474 mm 4‘ 10“ ft-in
R	A-frame1 swing radius	9750 mm 32‘ ft-in
R1	Rear counterweight swing radius	6980 mm 22‘ 11“ ft-in
Dimensions basic machine with 1500 mm (4‘ 11“ ft-in) base plates:		
B(1500)	Width basic machine with 1500 mm (4‘ 11“ ft-in) base plates	8300 mm 27‘ 3“ ft-in
L6(1500)	Length crawler side frame with 1500 mm (4‘ 11“ ft-in) base plates	9703 mm 31‘ 10“ ft-in
B2(1500)	Width 1500 mm (4‘ 11“ ft-in) base plates	1500 mm 4‘ 11“ ft-in
H4(1500)	Height crawler side frame with 1500 mm (4‘ 11“ ft-in) base plates	1482 mm 4‘ 10“ ft-in

Tab. 16: Technical data basic machine with undercarriage with adjustable track width

LWN/LR.x/V03.01//Auslieferung/2015-06-03/en

copyright by
LIEBHERR

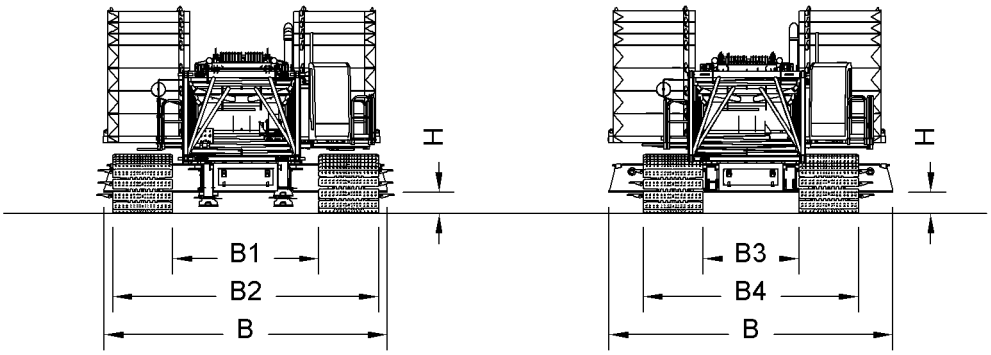

Fig. 12: Dimensions basic machine with track width adjustment

Name		Value
B	Width undercarriage	7100 mm 23‘ 4“ ft-in
H	Ground clearance undercarriage	520 mm 1‘ 8“ ft-in
Detailed dimensions:		
B1	Width inside edges of base plate with medium track	3970 mm 13‘ ft-in
B2	Width outer edges of base plate with medium track	6370 mm 20‘ 11“ ft-in
B3	Width inside edges of base plates when narrow track is used	2400 mm 7‘ 10“ ft-in
B4	Width outside edges of base plates when narrow track is used	4800 mm 15‘ 9“ ft-in

Tab. 17: Technical data basic machine with track width adjustment

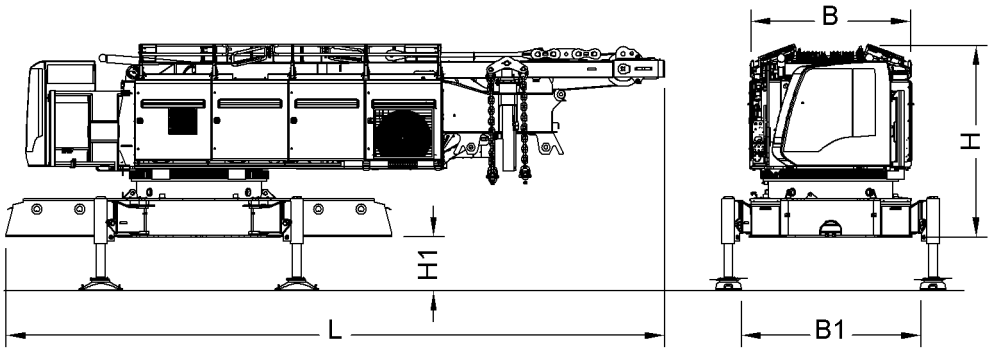

Fig. 13: Dimensions basic machine in transport position on jacks

Name		Value
L	Length basic machine in transport position	12300 mm 40‘ 4“ ft-in
B	Width basic machine in transport position	3000 mm 9‘ 10“ ft-in
H	Height basic machine in transport position	3500 mm 11‘ 6“ ft-in

LWN/LR.x/V03.01//Auslieferung/2015-06-03/en

copyright by
LIEBHERR

Name		Value
Detailed dimensions:		
B1	Width between support pads	3285 mm 10‘ 9“ ft-in
H1	Ground clearance basic machine	970 mm 3‘ 2“ ft-in

Tab. 18: Technical data basic machine in transport position on jacks

1.7.2 A-frame1

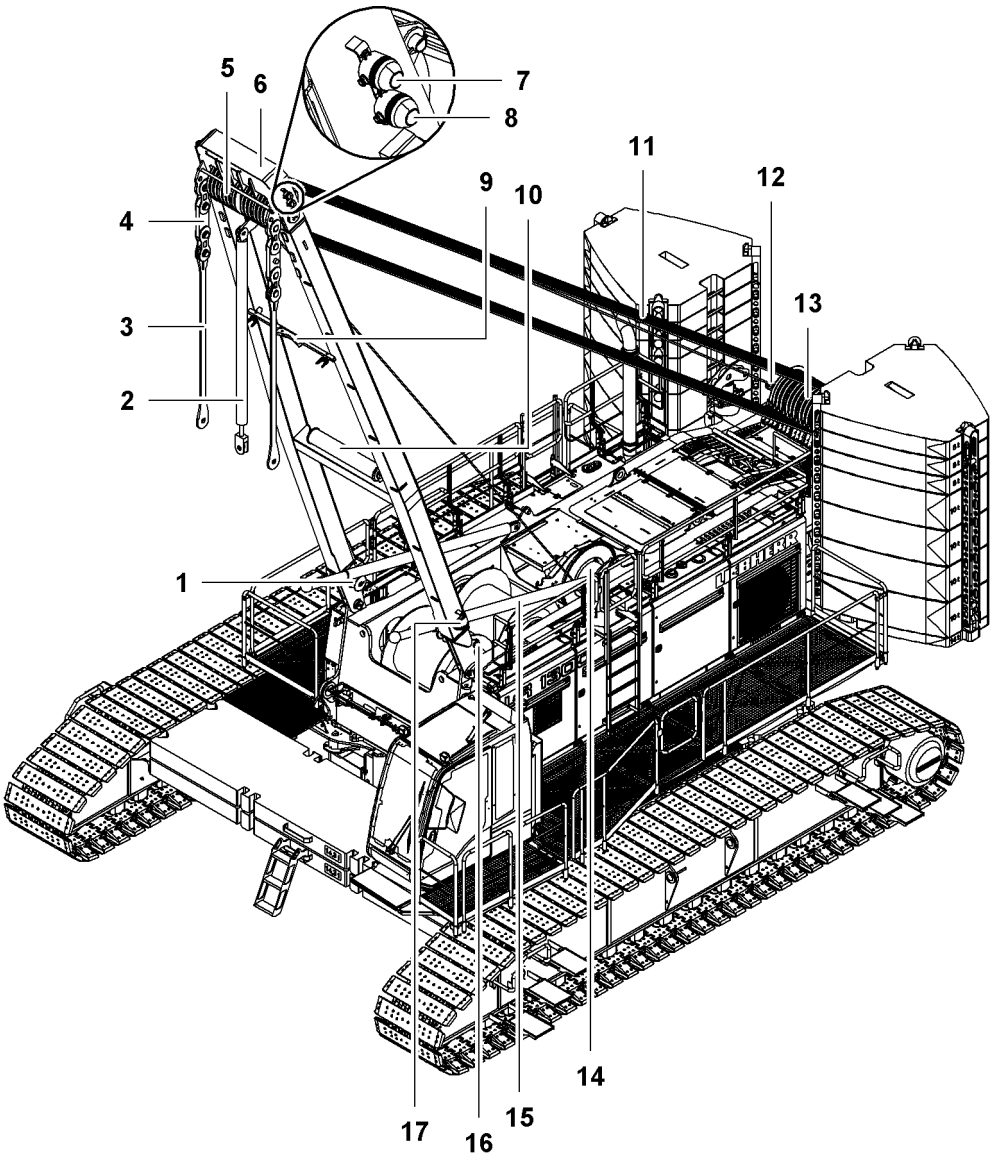

Fig. 14: A-frame1

1 Supporting roll (2x) for main boom tilting-back supports
2 Assembly cylinder
3 A-frame1 equalizer
4 Tension load cell (2x)
10 Rope protection roller
11 Rope of main boom luffing winch
12 Rope fixing point
13 Uppercarriage pulley set

See next page for continuation of the image legend

LWN/LR.x/V03.01//Auslieferung/2015-06-03/en

5 A-frame1 pulley set
6 A-frame1
7 Load moment limiter lamp
8 Flashing light
9 Crossbar
14 Main boom luffing winch
15 Main boom tilting-back support (2x)
16 A-frame1 cylinder (2x)
17 Mechanical angle indicator

Below a certain main boom angle (or if the main boom is not installed), the main boom tilting-back supports **15** rest on the supporting rolls **1**. The main boom tilting-back supports **15** run in guide rails on the main boom base section and prevent the main boom from tipping backwards.

The assembly cylinder **2** serves for all lifting jobs when using the self-assembly system. If A-frame1 is tilted backwards, the crossbar **9** prevents the assembly cylinder from falling through A-frame1.

The A-frame1 equalizer **3** and the main boom pendant straps connect A-frame1 to the boom head.

A-frame1 **6**:
– is coupled to the front of the uppercarriage.
– is used for erecting, adjusting and laying down the main boom.
– is laid down backwards on the uppercarriage for transport.

The rope protection roller **10** protects A-frame1 from damage caused by the main boom luffing winch.

The main boom luffing winch **14** adjusts A-frame1. The rope of the main boom luffing winch **11** is reeved between the uppercarriage pulley set **13**, the A-frame1 pulley set **5** and the main boom luffing winch **14** and fastened to the rope fixing point **12** on the uppercarriage.

The A-frame1 cylinders **17**:
– prevent A-frame1 from falling back onto the uppercarriage.
– lift A-frame1 out of its transport position on the uppercarriage, or lower it into its transport position.

The mechanical boom angle indicator **18** shows the machine operator the current angular position of A-frame1.

1.7.3 Steel pendant straps on A-frame1

A-frame1 equalizer

Installation site in crane operation:
– Main boom 2821 (For more information see: Pendant straps A-frame1 to main boom head 2821, page 1233)
– Main boom 2821 + derrick boom 2220 (For more information see: A-frame1 to 2220 derrick boom head pendant straps, page 1316)
– Main boom 2821 + reducing adapter 2821/2316 (For more information see: Pendant straps A-frame1 to main boom head 2316, page 1459)

LWN/LR.x/V03.01//Auslieferung/2015-06-03/en

copyright by LIEBHERR

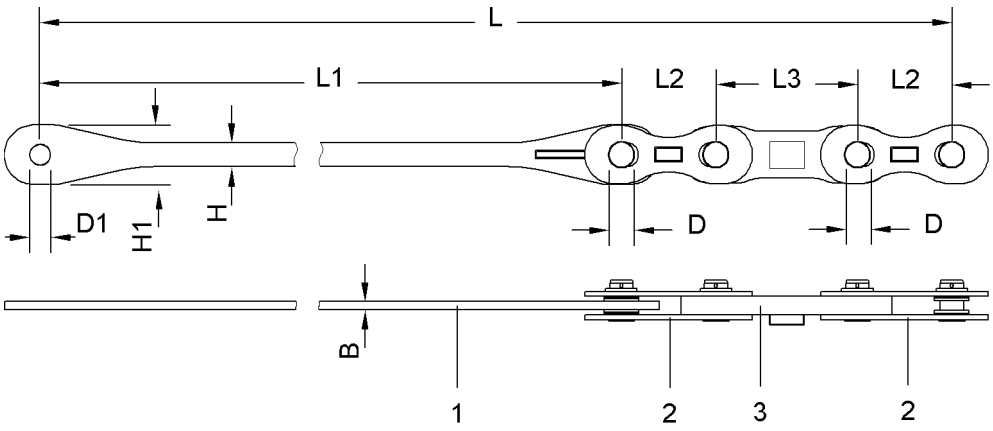

Fig. 15: Dimensions equalizer on A-frame1

1 Pendant strap
2 Connecting links
3 Tension load cell

Name		Value
L	Length	3730 mm 12‘ 3“ ft-in
L1	Length of pendant strap	2680 mm 8‘ 10“ ft-in
L2	Length of connecting link	300 mm 1‘ ft-in
L3	Length of tension load cell	450 mm 1‘ 6“ ft-in
W	Width of pendant strap	25 mm 0.98“ in
H	Height of pendant strap	77 mm 3.03“ in
H1	Height of pendant strap	190 mm 7.48“ in
D	Pin Ø	75 mm 2.95“ in
D1	Pin Ø	65 mm 2.56“ in
Weight		155 kg 342 lb

Tab. 19: Technical data equalizer of A-frame1

1.7.4 CF pendant straps on A-frame1

A-frame1 equalizer

Installation site in crane operation:
– Main boom 2821 (For more information see: Pendant straps A-frame1 to main boom head 2821, page 1234)
– Main boom 2821 + derrick boom 2220 (For more information see: A-frame1 to 2220 derrick boom head pendant straps, page 1320)

LWN/LR.x/V03.01//Auslieferung/2015-06-03/en

copyright by
LIEBHERR

– Main boom 2821 + reducing adapter 2821/2316 (For more information see: Pendant straps A-frame1 to main boom head 2316, page 1461)

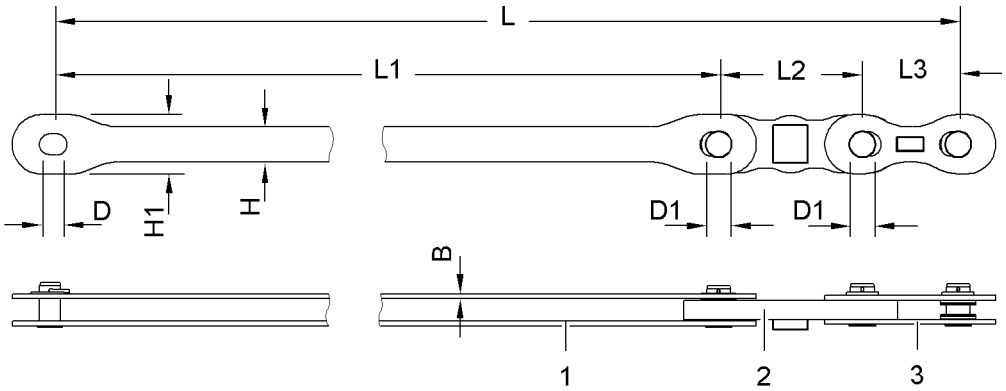

Fig. 16: Dimensions equalizer on A-frame1

1 Pendant straps
2 Tension load cell
3 Connecting links

Name		Value
L	Length	3700 mm 12‘ 2“ ft-in
L1	Length of pendant strap	2950 mm 9‘ 8“ ft-in
L2	Length of tension load cell	450 mm 1‘ 6“ ft-in
L3	Length of connecting link	300 mm 1‘ ft-in
B	Width of pendant strap	15 mm 0.59“ in
H	Height of pendant strap	110 mm 4.33“ in
H1	Height of pendant strap	185 mm 7.28“ in
D	Pin Ø	65 mm 2.56“ in
D1	Pin Ø	75 mm 2.95“ in
Weight		122 kg 269 lb

Tab. 20: Technical data equalizer of A-frame1

LWN/LR.x/V03.01//Auslieferung/2015-06-03/en

copyright by
LIEBHERR

1.7.5 Uppercarriage

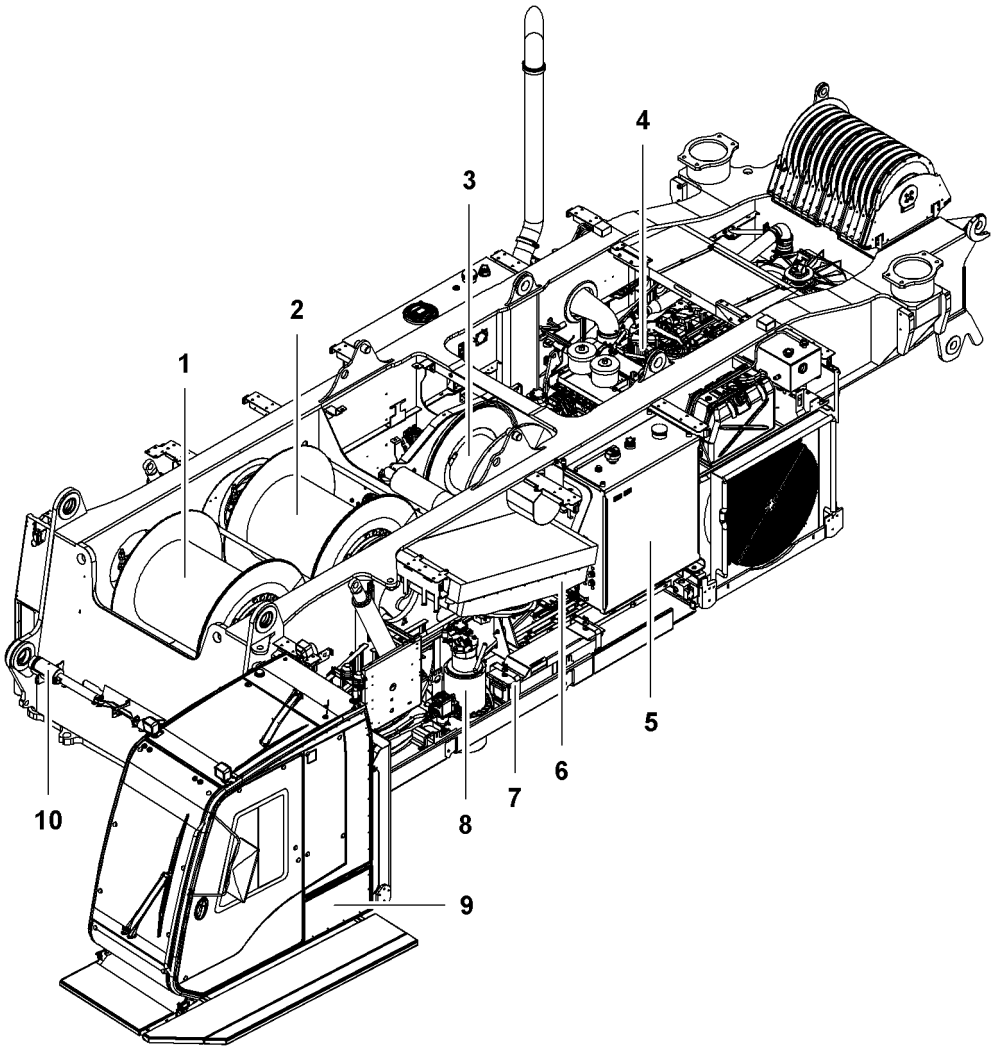

Fig. 17: Uppercarriage viewed from front left

1	Winch2	**6**	Hydraulic oil cooler
2	Winch1	**7**	Battery box
3	Main boom luffing winch	**8**	Swing gear (2x)
4	Central power unit	**9**	Cabin
5	Fuel tank	**10**	Pin connection cylinder for main boom base section

The uppercarriage:
- is a self-supporting, torsion-resistant structure.
- accommodates the winches, swings, the central power unit, cabin, A-frame1 and the main boom.
- is connected to the undercarriage by a roller-bearing swing ring.

Winch1 **2** and winch2 **1** control the lifting/lowering of the hook/pulley block.

The main boom is adjusted using the main boom luffing winch **3**.

The central power unit **4**:
- is located in the sealed machine housing and protected from weather influences and dirt.
- consists of a diesel engine and hydraulic pumps of the hydraulic system.
- supplies all consumers through the hydraulic line network.

LWN/LR.x/V03.01//Auslieferung/2015-06-03/en

copyright by
LIEBHERR

The fuel tank **5** supplies fuel to the diesel engine. The optional refueling pump makes it easier to fill the fuel tank.

The swing gears **8**:
– are positioned on the uppercarriage, on the left behind the cabin.
– engage with the roller-bearing swing ring on the undercarriage.

The cabin **9**:
– contains all required control elements and operating elements.
– has a large safety-glass window and is sound-proofed.
– is equipped with an ergonomic operator's seat.
– can be tilted back by as much as 18.5° using hydraulic cylinders.
– can be folded in sideways for transport.

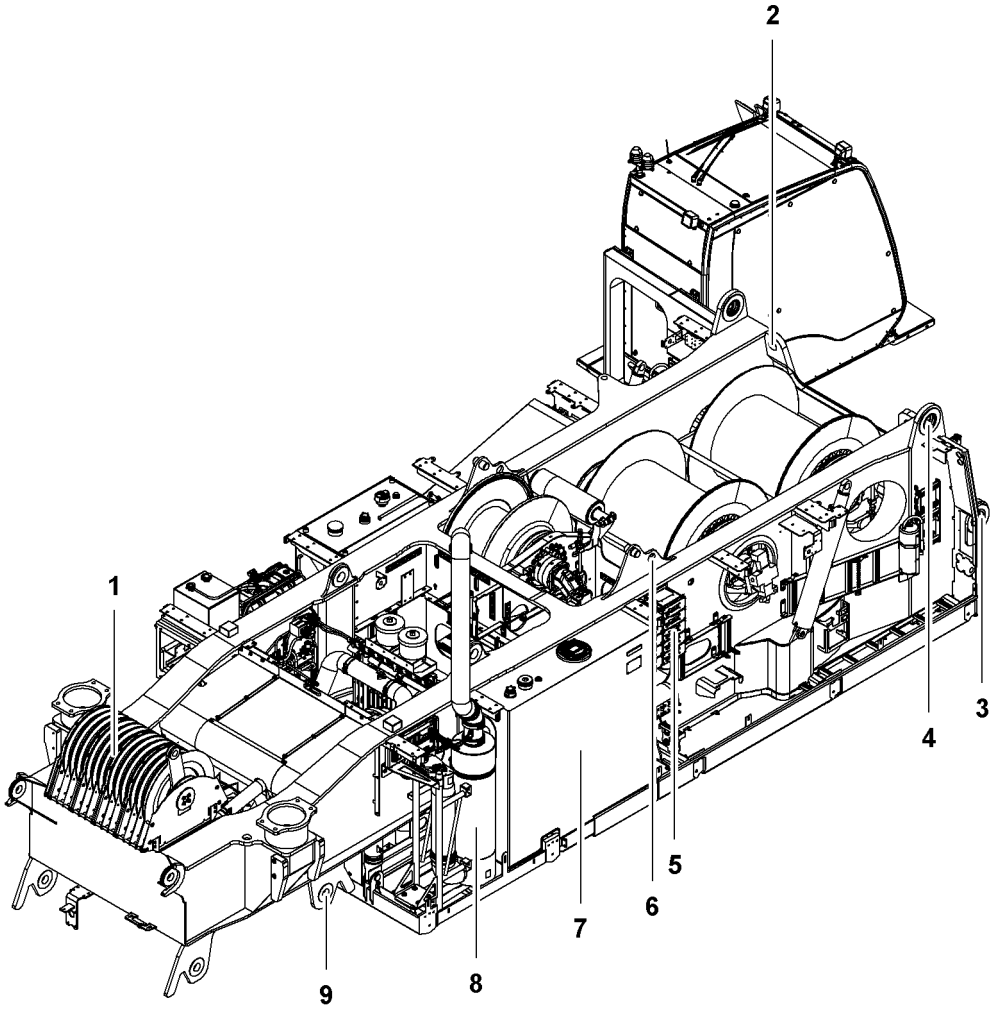

Fig. 18: Uppercarriage viewed from rear right

1	Pulley set	**6**	Pivot point (2x) for main boom tilting-back supports
2	Rigging point (2x) for loading basic machine	**7**	Hydraulic oil tank
3	Pivot point (2x) for main boom base section	**8**	Exhaust system
4	Pivot point (2x) for A-frame1	**9**	Pin connection point (4x) for rear counterweight
5	CAN modules		

LWN/LR.x/V03.01//Auslieferung/2015-06-03/en

copyright by
LIEBHERR

The hydraulic oil tank **7**:
– supplies the entire hydraulic system.
– is equipped with a return circuit filter and a venting filter.
– has inspection glasses and an electric fill level sensor.

1.7.6 Cabin

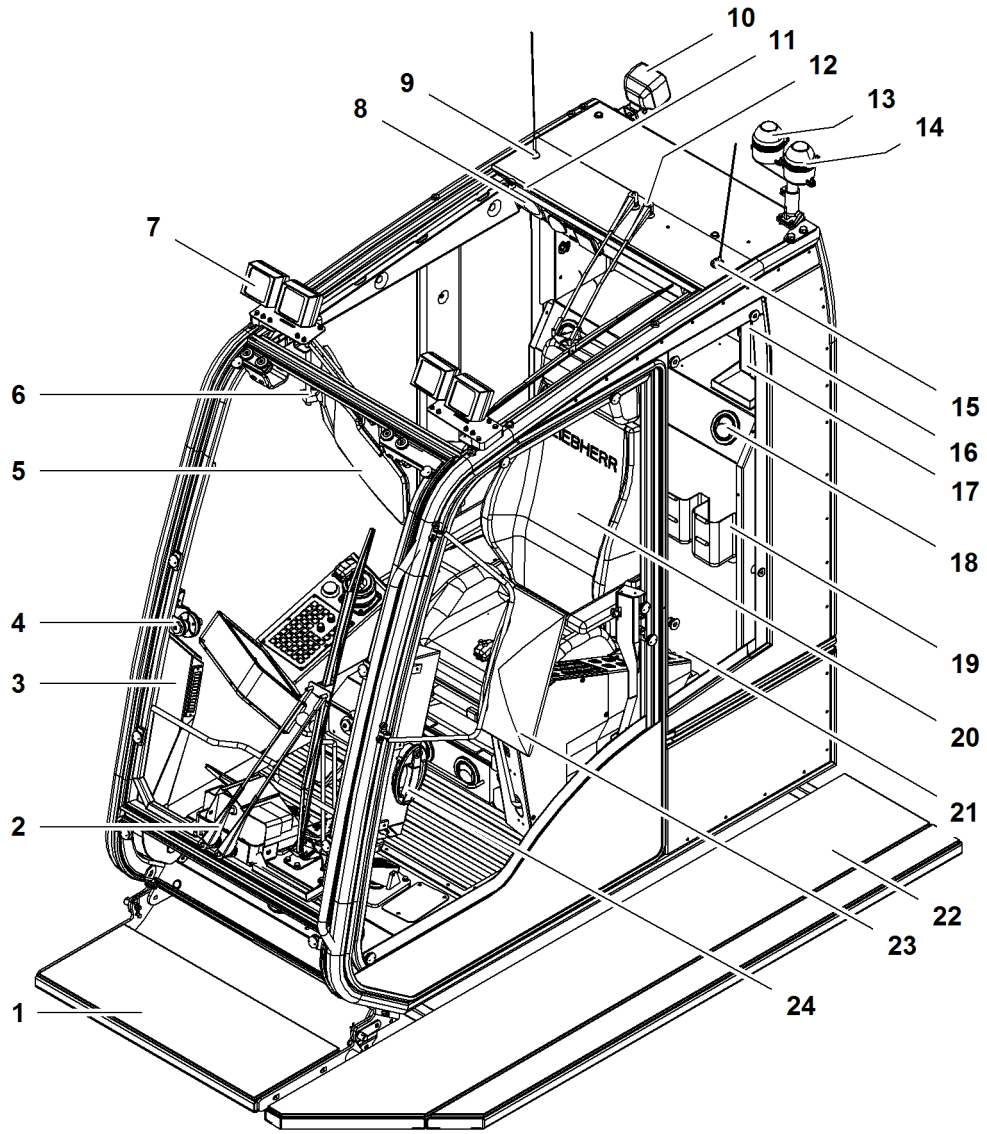

Fig. 19: Cabin

1	Front platform	**13**	Flashing light
2	Front windscreen wiper	**14**	Load moment limiter lamp
3	Air nozzle	**15**	GSM antenna
4	Window lock (both sides)	**16**	First-aid box
5	Sun blind	**17**	Emergency hammer
6	Internal rearview mirror	**18**	Air nozzle
7	Front floodlight (4x)	**19**	Drink holder
8	Reading lamp	**20**	Operator's seat
9	Radio antenna	**21**	Screen wash fluid tank (2x)
10	Rear floodlight	**22**	Side platform
11	Sun blind for roof window	**23**	External rearview mirror
12	Roof windscreen wiper	**24**	Door lock

LWN/LR.x/V03.01//Auslieferung/2015-06-03/en

copyright by
LIEBHERR

1.7.7 Central power unit

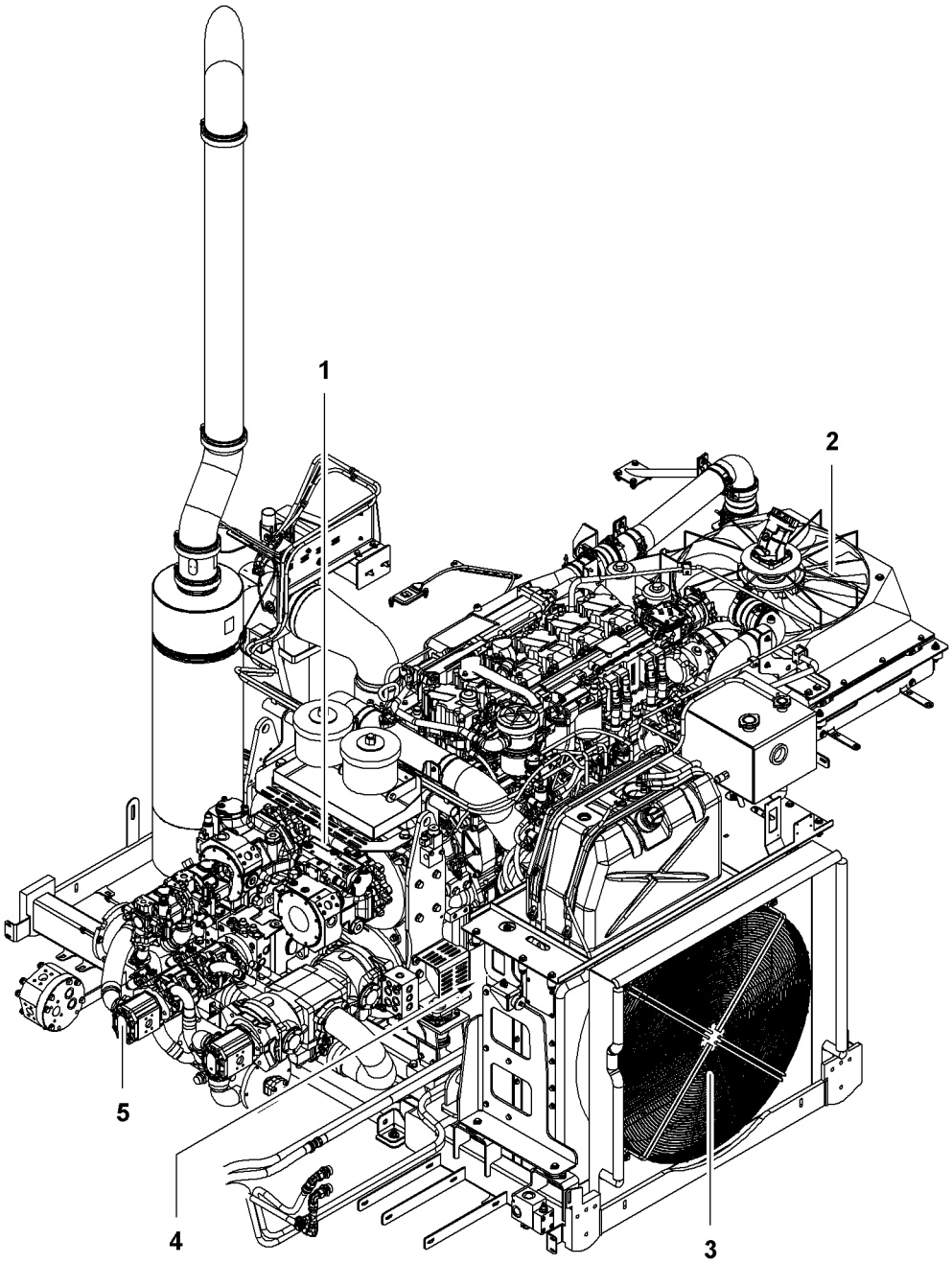

Fig. 20: Central power unit viewed from front left

1 Distribution gearbox
2 Charge air cooler
3 Water cooler
4 Air filter
5 Pump equipment

LWN/LR.x/V03.01//Auslieferung/2015-06-03/en

copyright by
LIEBHERR

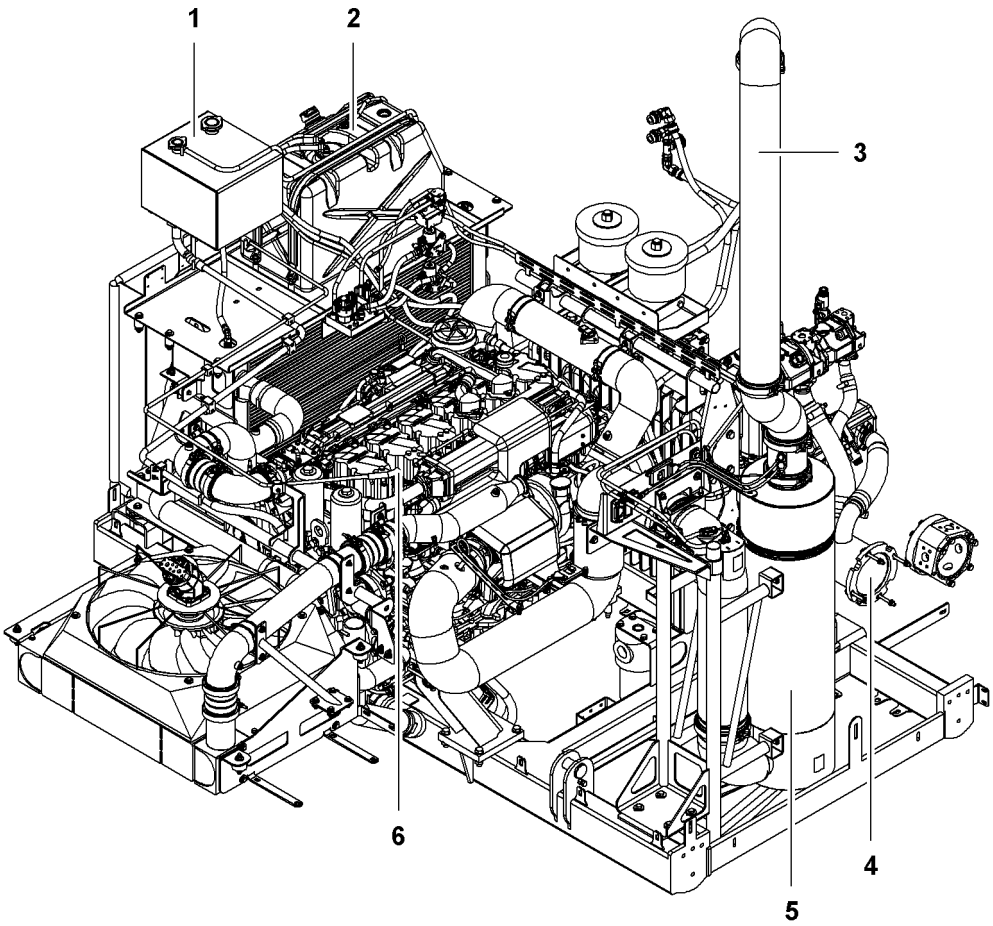

Fig. 21: Central power unit viewed from right rear

1 Compensation tank
2 Urea tank
3 Exhaust pipe
4 Hydraulic oil suction pipe
5 Exhaust aftertreatment system
6 Diesel engine

LWN/LR.x/V03.01//Auslieferung/2015-06-03/en

1.7.8 Platforms on uppercarriage

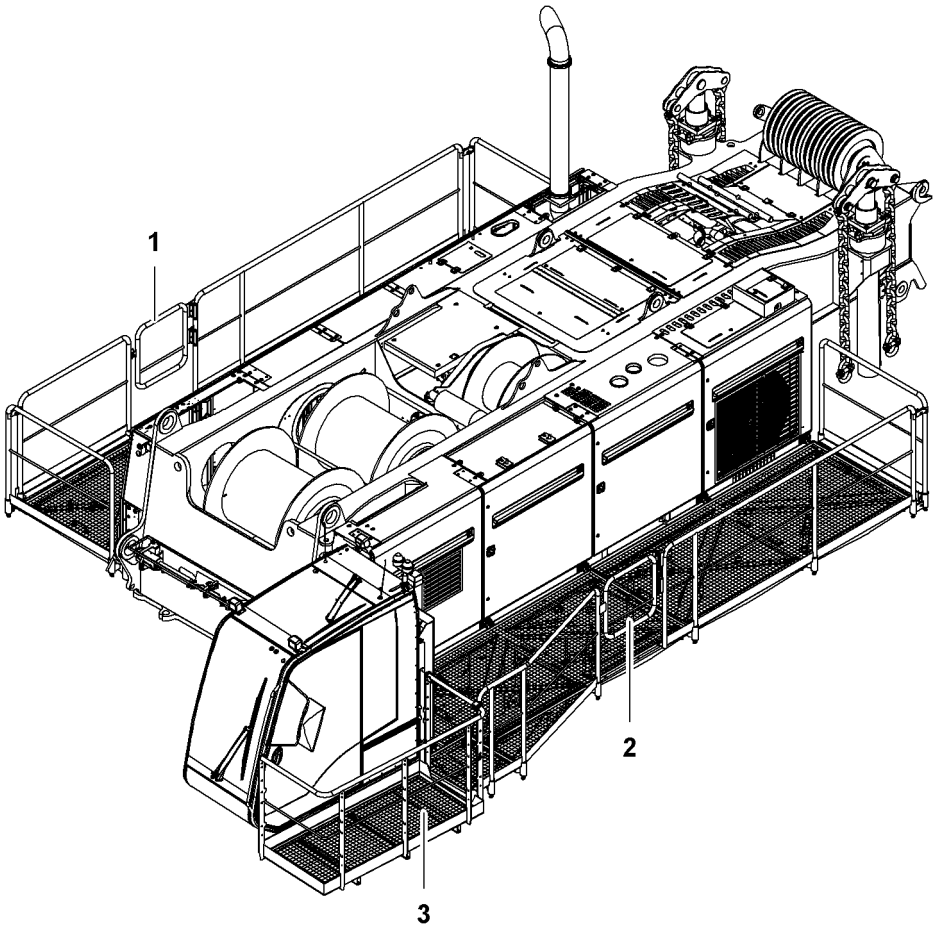

Fig. 22: Platforms on uppercarriage

1 Right platform
2 Left platform
3 Platform on cabin

LWN/LR.x/V03.01//Auslieferung/2015-06-03/en

copyright by
LIEBHERR

Platform on cabin

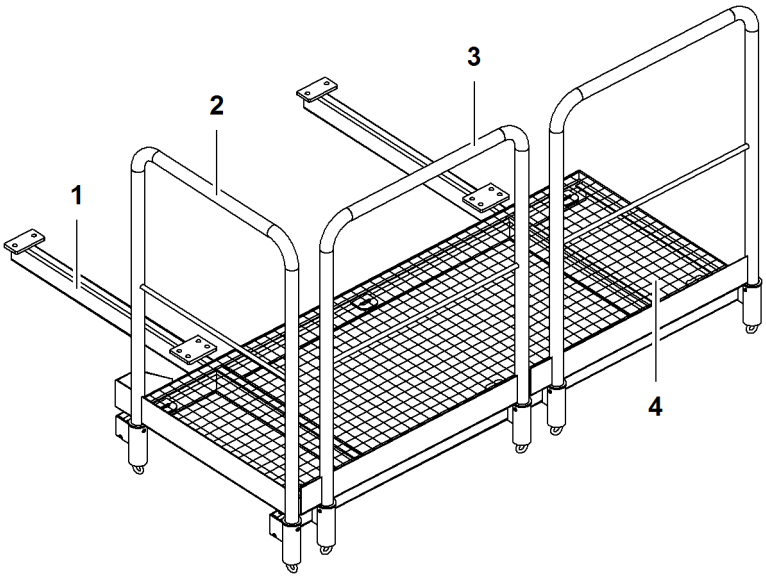

Fig. 23: Platform on cabin

1 Frame
2 Railing part A
3 Railing part B (2x)
4 Catwalk grating

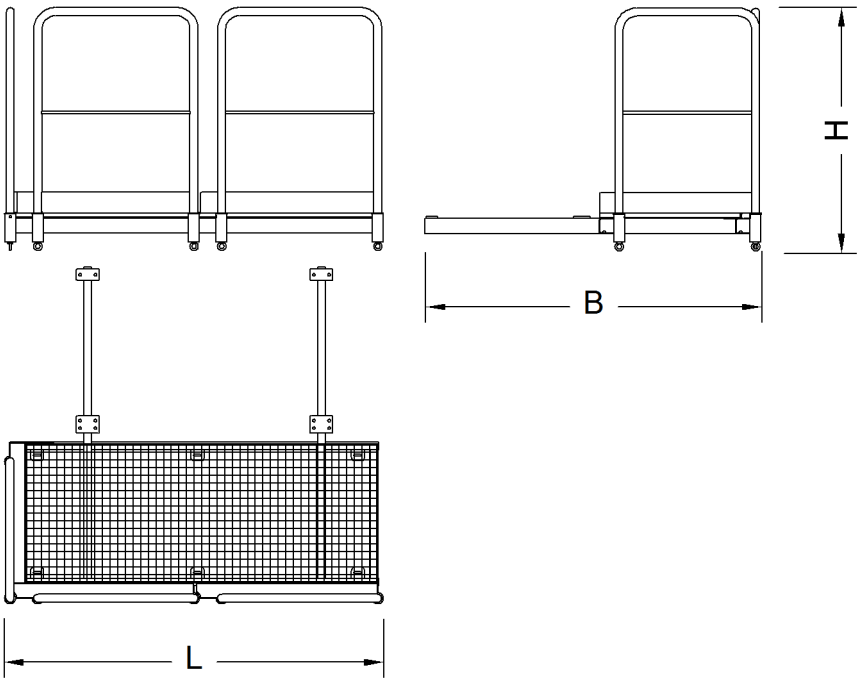

Fig. 24: Dimensions platform on cabin

Name		Value
L	Length	1986 mm 6‘ 6“ ft-in
B	Width	1764 mm 5‘ 9“ ft-in

LWN/LR.x/V03.01//Auslieferung/2015-06-03/en

Name		Value
H	Height	1273 mm 4‘ 2“ ft-in
Weight		125 kg 276 lb

Tab. 21: Technical data platform on cabin

Frame

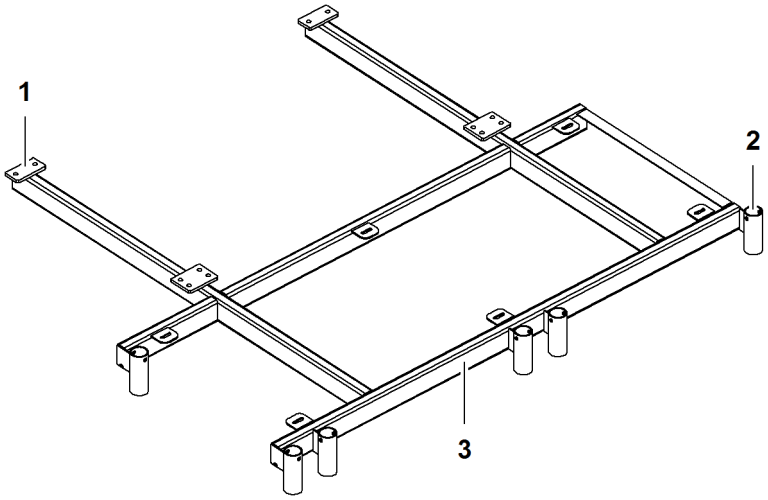

Fig. 25: Frame

1 Attachment point
2 Support for railing part
3 Frame

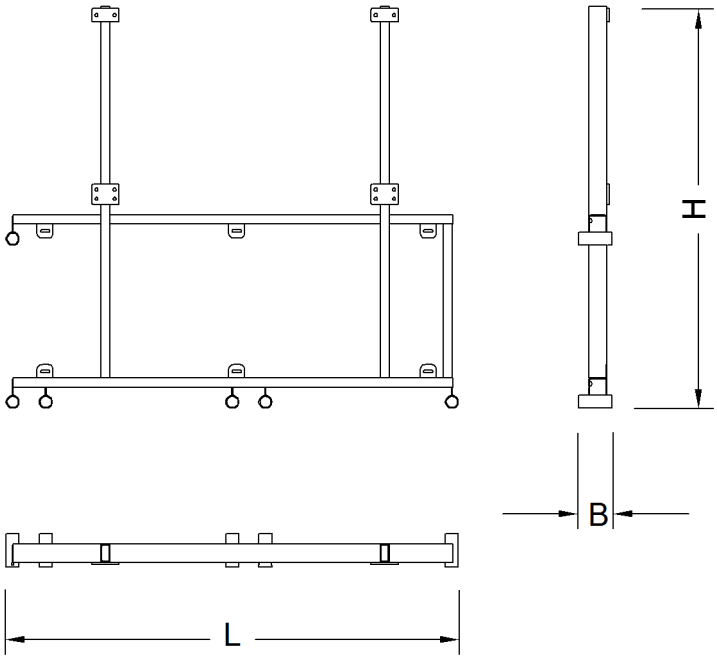

Fig. 26: Frame dimensions

LWN/LR.x/V03.01//Auslieferung/2015-06-03/en

copyright by
LIEBHERR

Name		Value
L	Length	1983 mm 6‘ 6“ ft-in
B	Width	146 mm 5.75“ in
H	Height	1792 mm 5‘ 11“ ft-in
Weight		57 kg 126 lb

Tab. 22: Technical data frame

Railing part A

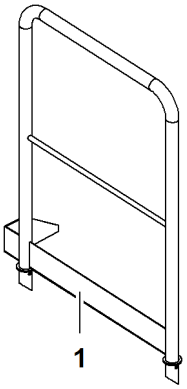

Fig. 27: Railing part A

1 Railing part A

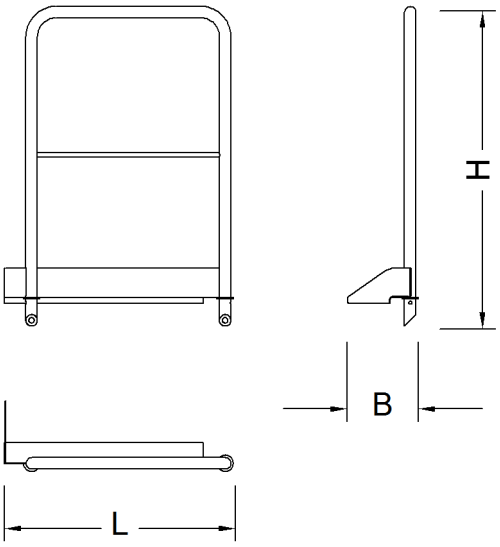

Fig. 28: Dimensions railing part A

Name		Value
L	Length	846 mm 2‘ 9“ ft-in

LWN/LR.x/V03.01//Auslieferung/2015-06-03/en

Name		Value
B	Width	260 mm 10.24“ in
H	Height	1182 mm 3‘ 11“ ft-in
Weight		15 kg 33.07 lb

Tab. 23: Technical data railing part A

Railing part B

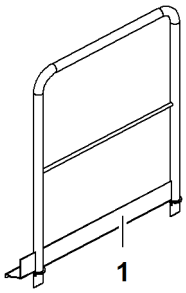

Fig. 29: Railing part B

1 Railing part B

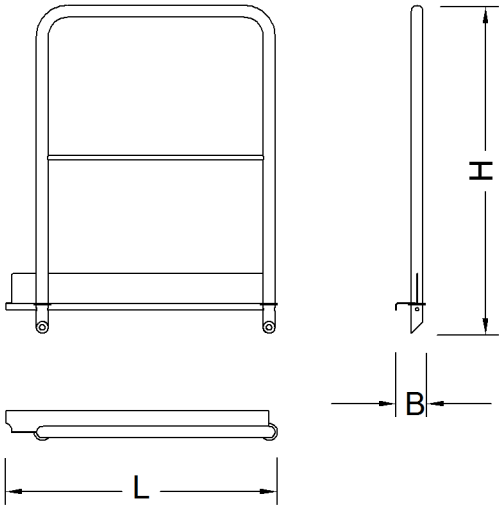

Fig. 30: Dimensions railing part B

Name		Value
L	Length	978 mm 3‘ 3“ ft-in
B	Width	107 mm 4.21“ in
H	Height	1182 mm 3‘ 11“ ft-in

LWN/LR.x/V03.01//Auslieferung/2015-06-03/en

copyright by
LIEBHERR

Name	Value
Weight	16 kg 35.27 lb

Tab. 24: Technical data railing part B

Catwalk grating

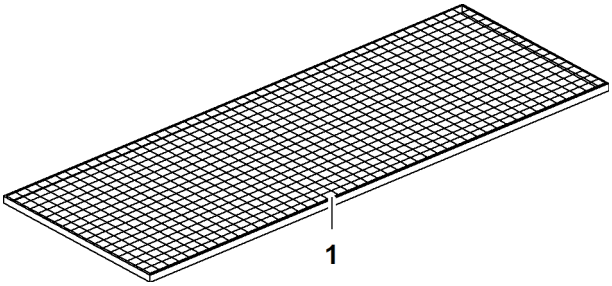

Fig. 31: Catwalk grating

1 Catwalk grating

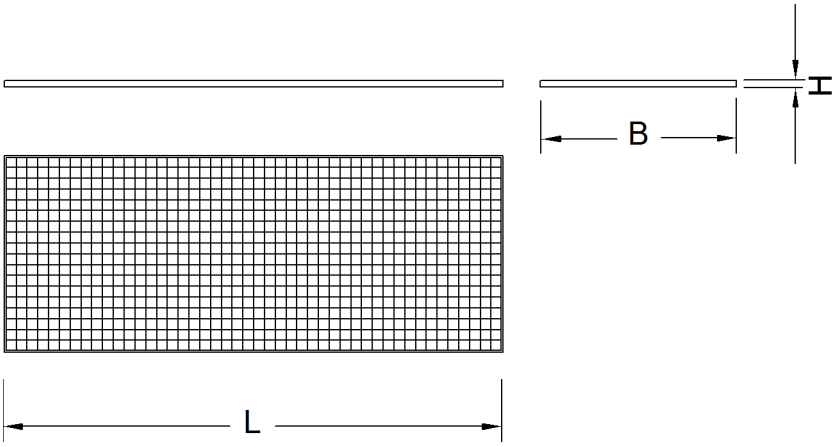

Fig. 32: Dimensions catwalk grating

Name		Value
L	Length	1847 mm 6‘ 1“ ft-in
B	Width	727 mm 2‘ 5“ ft-in
H	Height	25 mm 0.98“ in
Weight		16 kg 35.27 lb

Tab. 25: Technical data catwalk grating

Right platform on uppercarriage

The right platform on the uppercarriage consists of the following components:
– Bracket supports

LWN/LR.x/V03.01//Auslieferung/2015-06-03/en

copyright by
LIEBHERR

- Brackets
- Sheet metal
- Diagonals
- Railing parts
- Catwalk grating
- Strap supports
- Straps

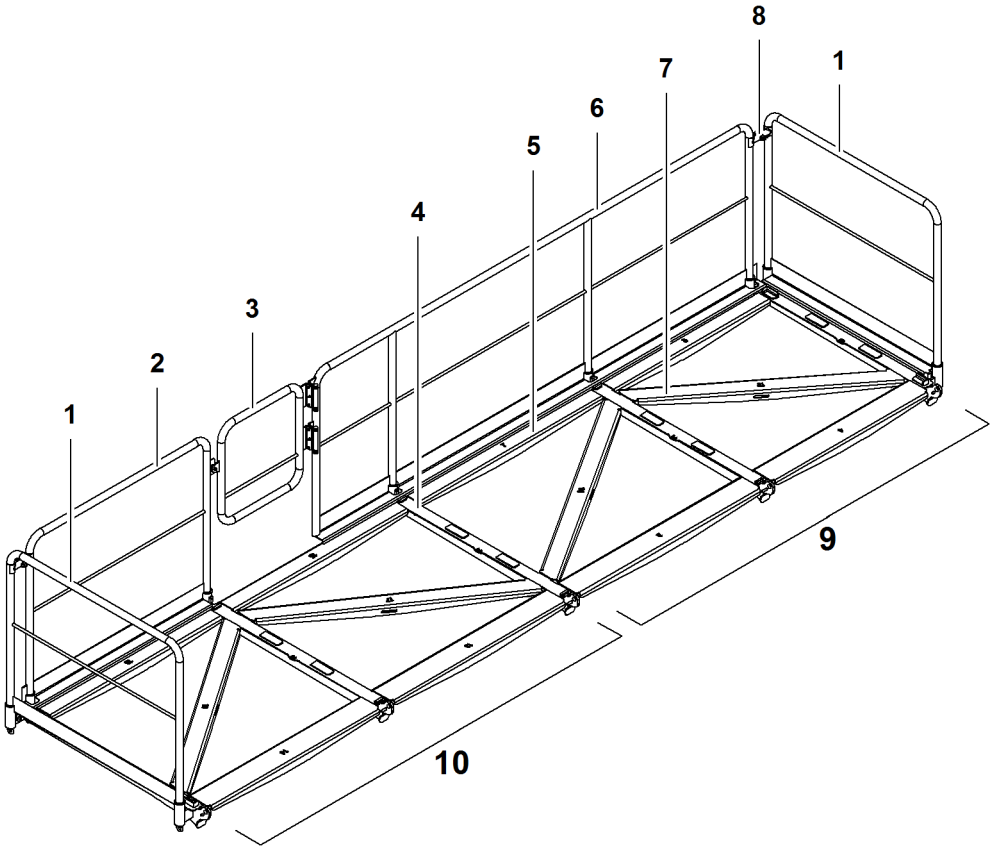

Fig. 33: Right platform on uppercarriage

1	Railing part1	**6**	Railing part3
2	Railing part2	**7**	Diagonal (4x)
3	Access	**8**	Railing joint (2x)
4	Bracket (5x)	**9**	Catwalk grating B
5	Plate (8x)	**10**	Grating A

The straps and strap supports are not illustrated.

Brackets, plates and diagonals are marked with part numbers.

LWN/LR.x/V03.01//Auslieferung/2015-06-03/en

copyright by
LIEBHERR

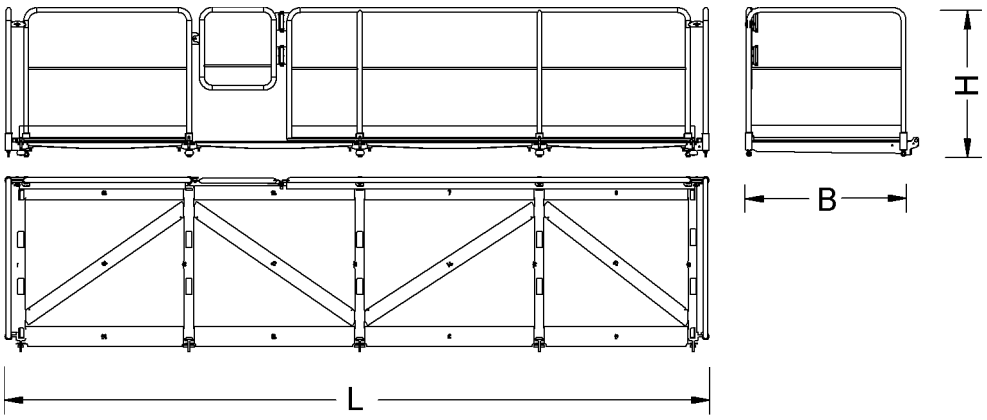

Fig. 34: Dimensions right platform on uppercarriage

Name		Value
L	Length	6019 mm 19‘ 9“ ft-in
B	Width	1513 mm 5‘ ft-in
H	Height	1275 mm 4‘ 2“ ft-in
Weight		550 kg 1,213 lb

Tab. 26: Technical data right platform on uppercarriage

Railing part1 for right platform

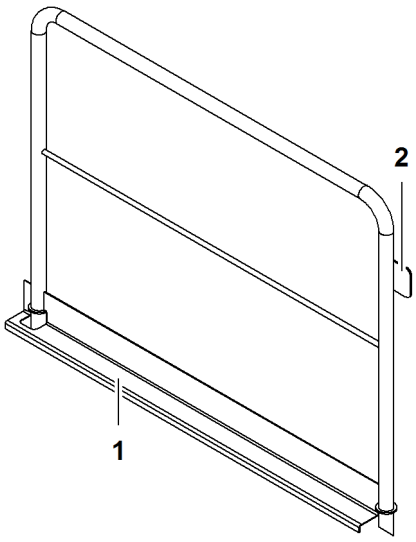

Fig. 35: Railing part1 for right platform

1 Railing part1

2 Stop for access

LWN/LR.x/V03.01//Auslieferung/2015-06-03/en

copyright by
LIEBHERR

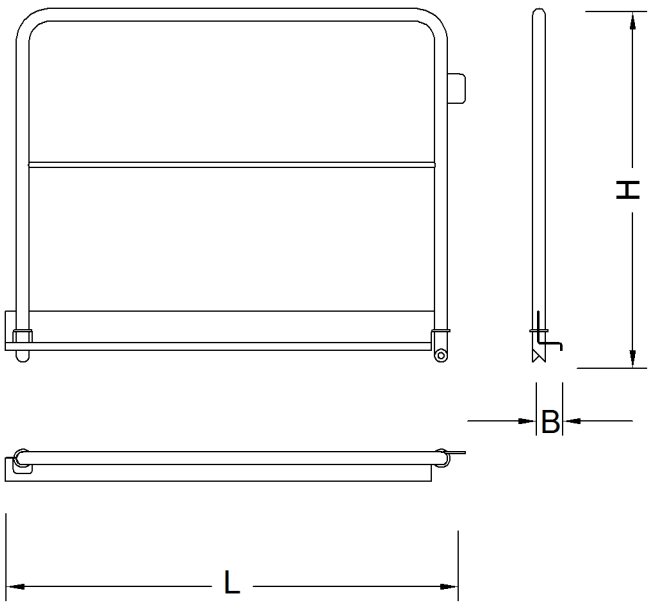

Fig. 36: Dimensions railing part1 for right platform

Name		Value
L	Length	1534 mm 5‘ ft-in
B	Width	107 mm 4.21“ in
H	Height	1177 mm 3‘ 10“ ft-in
Weight		40 kg 88.18 lb

Tab. 27: Technical data railing part1 for right platform

LWN/LR.x/V03.01//Auslieferung/2015-06-03/en

copyright by
LIEBHERR

Railing part2 for right platform

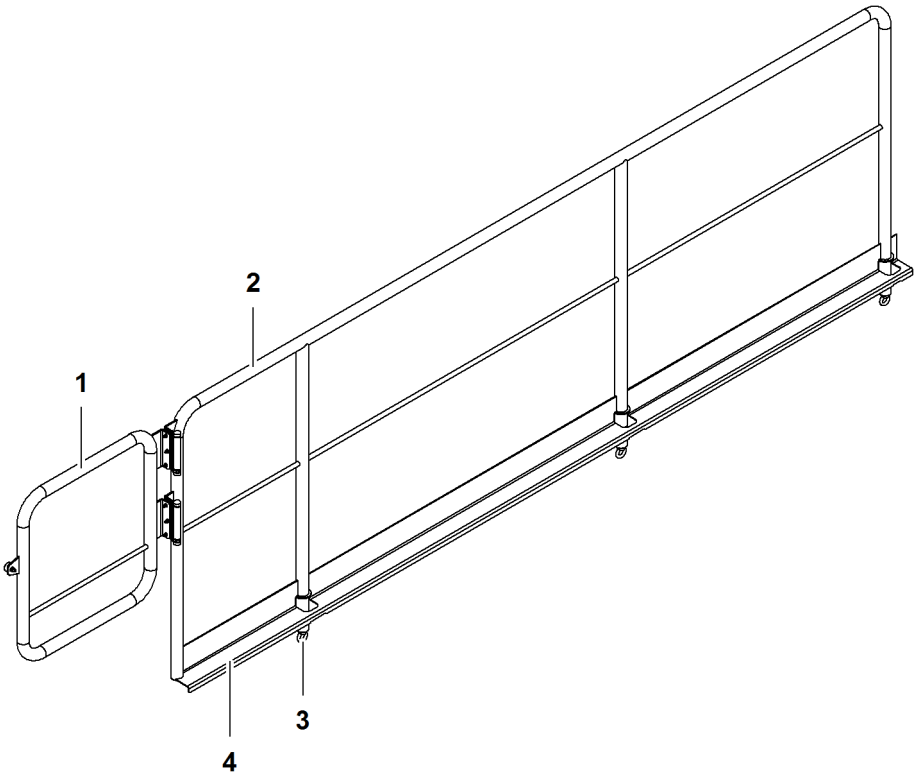

Fig. 37: Railing part2 for right platform

1 Support for access **2** Railing part2

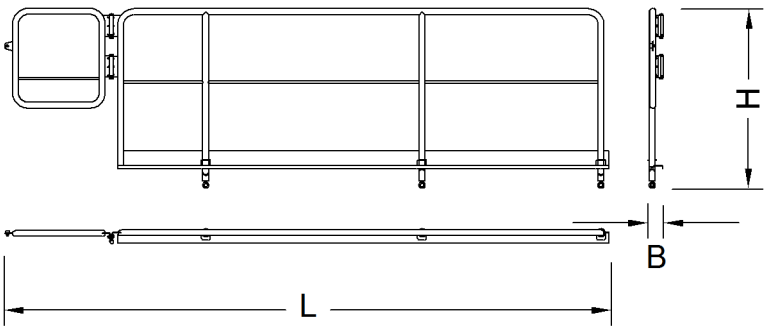

Fig. 38: Dimensions railing part2 for right platform

Name		Value
L	Length	4290 mm 14‘ 1“ ft-in
B	Width	107 mm 4.21“ in
H	Height	1278 mm 4‘ 2“ ft-in
Weight		48 kg 106 lb

Tab. 28: Technical data railing part2 for right platform

LWN/LR.x/V03.01//Auslieferung/2015-06-03/en

Railing part3 for right platform

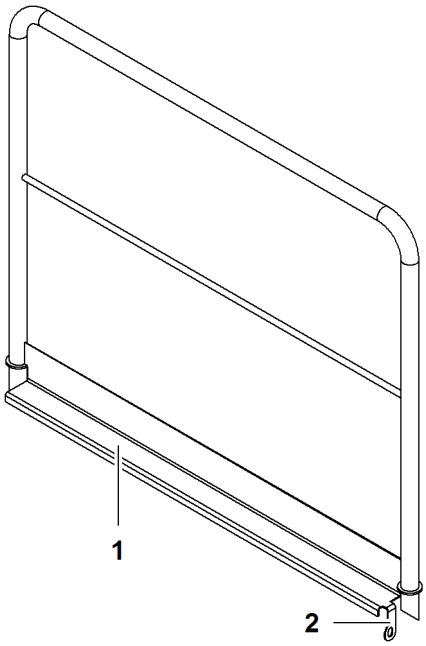

Fig. 39: Railing part3 for right platform

1 Railing part3

2 Securing element

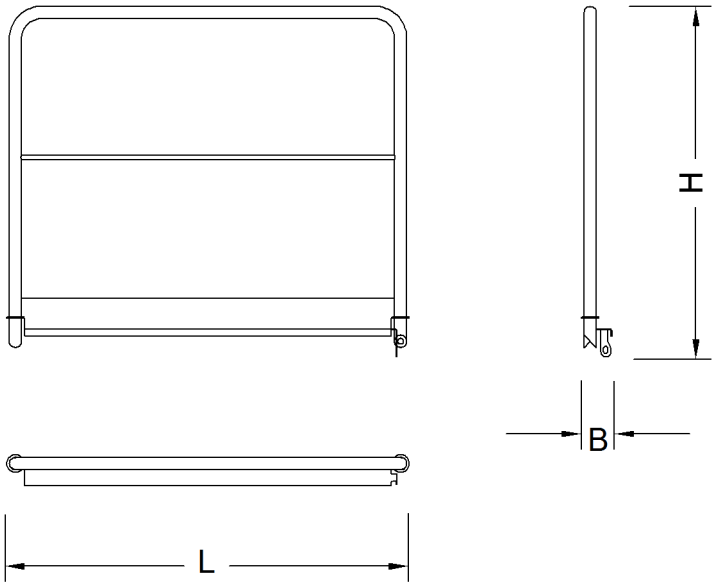

Fig. 40: Dimensions railing part3 for right platform

Name		Value
L	Length	1390 mm 4‘ 7“ ft-in
B	Width	98 mm 3.86“ in
H	Height	1208 mm 4‘ ft-in

LWN/LR.x/V03.01//Auslieferung/2015-06-03/en

copyright by
LIEBHERR

Name	Value
Weight	21 kg 46.30 lb

Tab. 29: Technical data railing part3 for right platform

Grating A for right platform

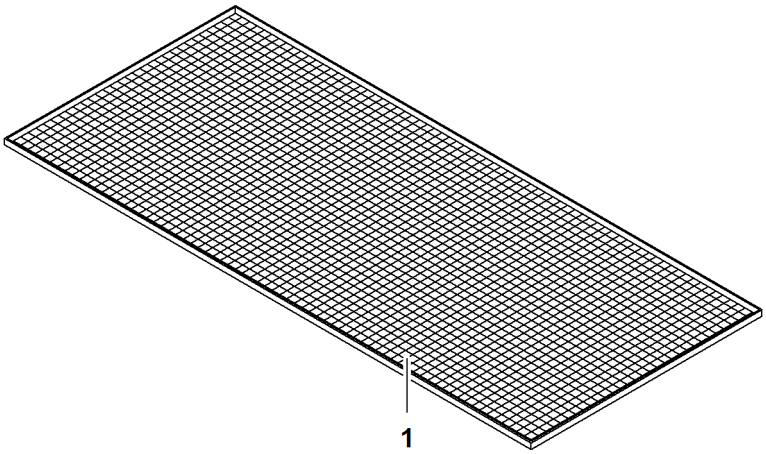

Fig. 41: Grating A for right platform

1 Grating A

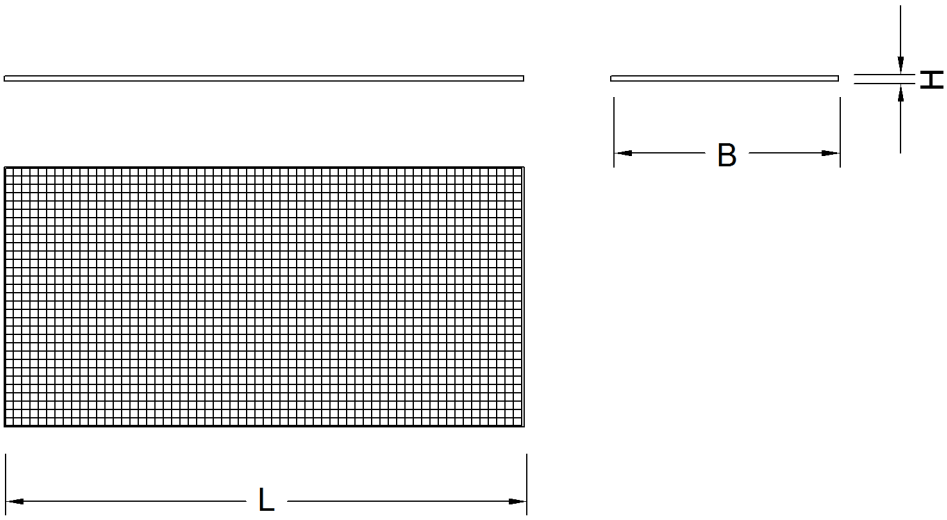

Fig. 42: Dimensions grating A for right platform

Name		Value
L	Length	2847 mm 9‘ 4“ ft-in
B	Width	1247 mm 4‘ 1“ ft-in
H	Height	30 mm 1.18“ in

LWN/LR.x/V03.01//Auslieferung/2015-06-03/en

copyright by
LIEBHERR

Name	Value
Weight	50.5 kg 111 lb

Tab. 30: Technical data grating A for right platform

Grating B for right platform

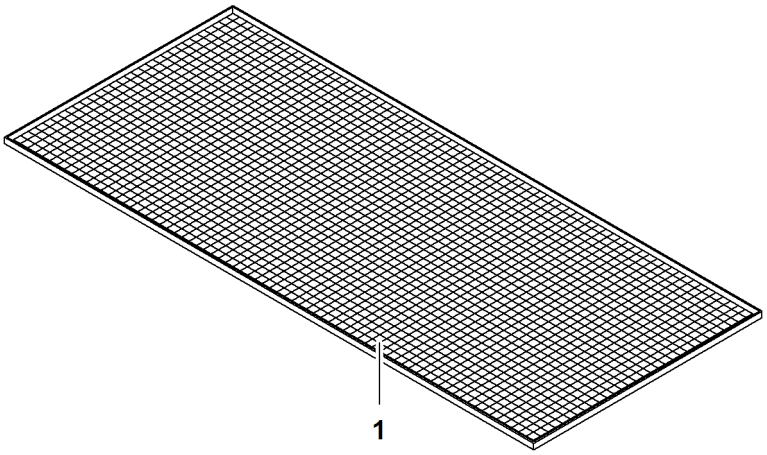

Fig. 43: Grating B for right platform

1 Grating B

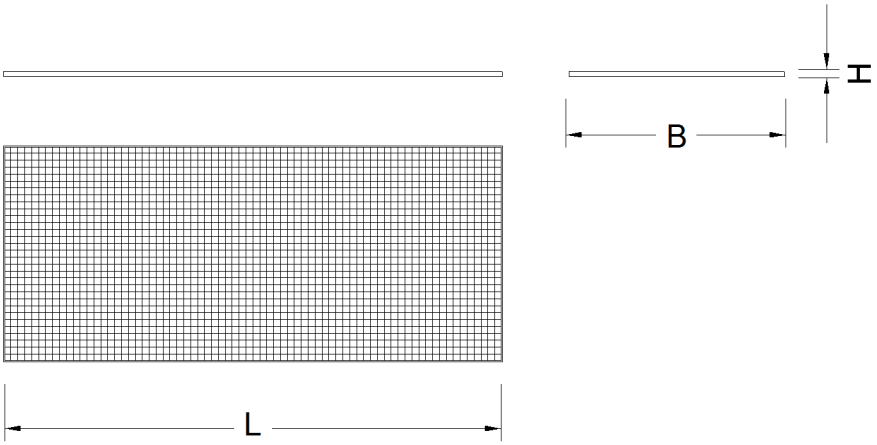

Fig. 44: Dimensions grating B for right platform

Name		Value
L	Length	2887 mm 9‘ 6“ ft-in
B	Width	1247 mm 4‘ 1“ ft-in
H	Height	30 mm 1.18“ in
Weight		49.5 kg 109 lb

Tab. 31: Technical data grating B for right platform

LWN/LR.x/V03.01//Auslieferung/2015-06-03/en

copyright by
LIEBHERR

Left platform on uppercarriage

The left platform on the uppercarriage consists of the following components:
- Bracket supports
- Brackets
- Sheet metal
- Diagonals
- Railing parts
- Grating
- Strap supports
- Straps

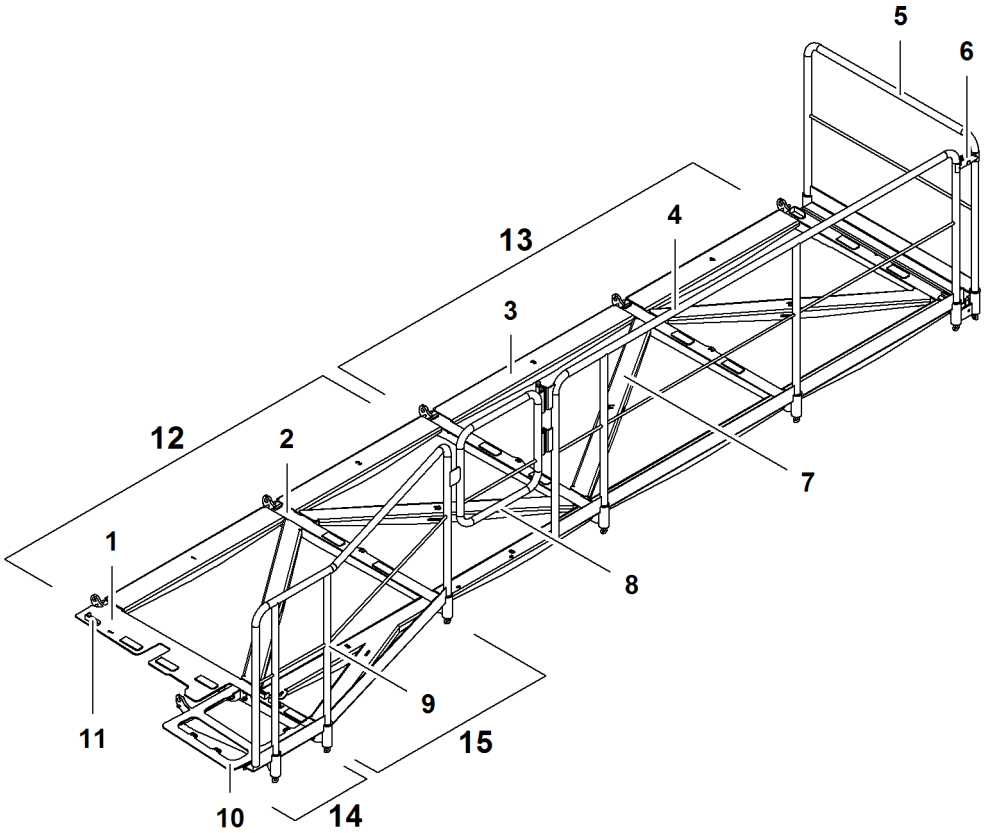

Fig. 45: Left platform on uppercarriage

1	Bracket1	**9**	Railing part6
2	Bracket (4x)	**10**	Bracket KnK1
3	Plate (8x)	**11**	Support for grate
4	Railing part5	**12**	Grating C
5	Railing part4	**13**	Grating D
6	Railing connection	**14**	Grating A
7	Diagonal (4x)	**15**	Grating B
8	Access		

The straps and strap supports are not illustrated.

Brackets, plates and diagonals are marked with part numbers.

LWN/LR.x/V03.01//Auslieferung/2015-06-03/en

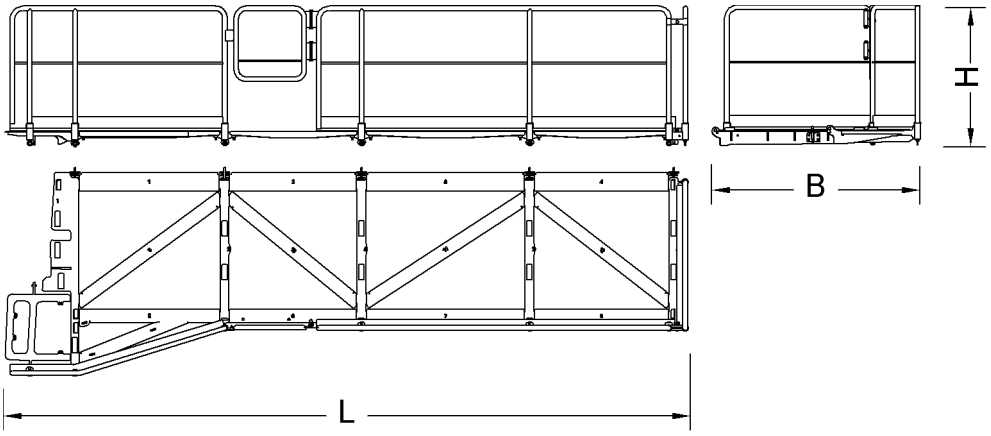

Fig. 46: Dimensions left platform on uppercarriage

Name		Value
L	Length	6241 mm 20‘ 6“ ft-in
B	Width	1771 mm 5‘ 10“ ft-in
H	Height	1275 mm 4‘ 2“ ft-in
Weight		570 kg 1,257 lb

Tab. 32: Technical data left platform on uppercarriage

Railing part6 for left platform

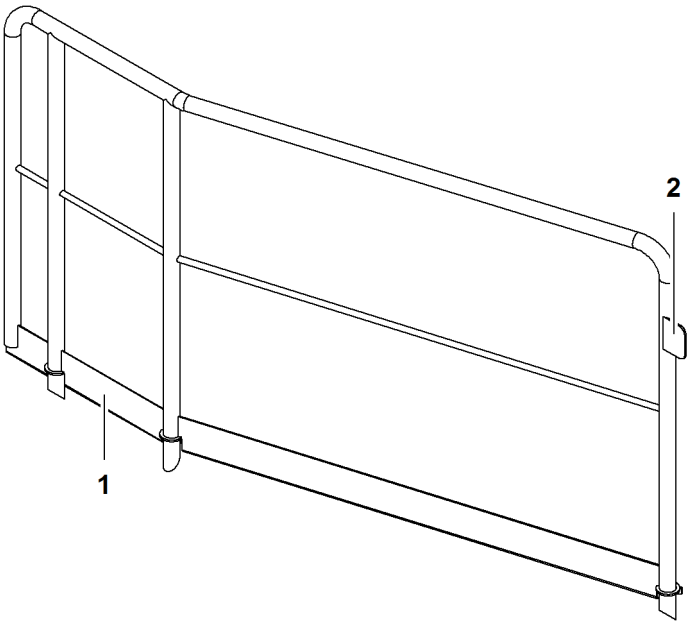

Fig. 47: Railing part6 for left platform

1 Railing part6

2 Stop for access

LWN/LR.x/V03.01//Auslieferung/2015-06-03/en

copyright by
LIEBHERR

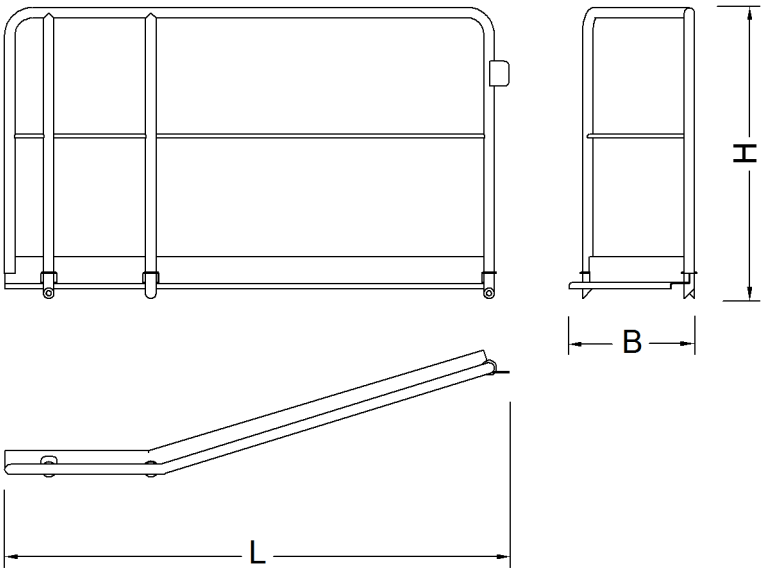

Fig. 48: Dimensions railing part6 for left platform

Name		Value
L	Length	2042 mm 6‘ 8“ ft-in
B	Width	505 mm 1‘ 8“ ft-in
H	Height	1177 mm 3‘ 10“ ft-in
Weight		32 kg 70.55 lb

Tab. 33: Technical data railing part6 for left platform

LWN/LR.x/V03.01//Auslieferung/2015-06-03/en

Railing part5 for left platform

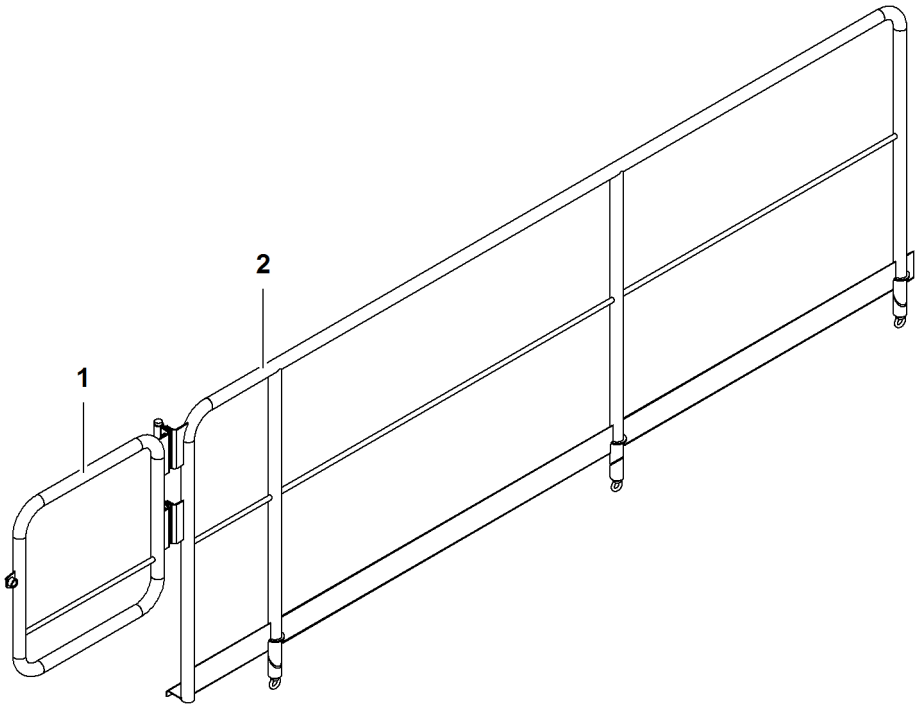

Fig. 49: Railing part5 for left platform

1 Access **2** Railing part5

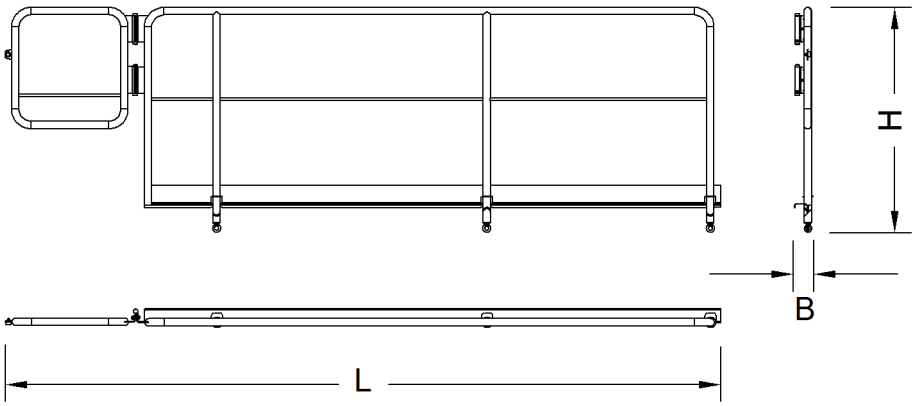

Fig. 50: Dimensions railing part5 for left platform

Name		Value
L	Length	4066 mm 13‘ 4“ ft-in
B	Width	107 mm 4.21“ in
H	Height	1275 mm 4‘ 2“ ft-in
Weight		47 kg 104 lb

Tab. 34: Technical data railing part5 for left platform

LWN/LR.x/V03.01//Auslieferung/2015-06-03/en

copyright by
LIEBHERR

Railing part4 for left platform

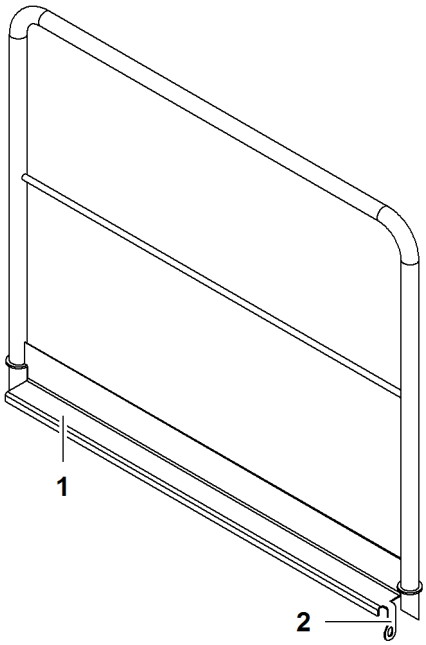

Fig. 51: Railing part4 for left platform

1 Railing part4 **2** Securing element

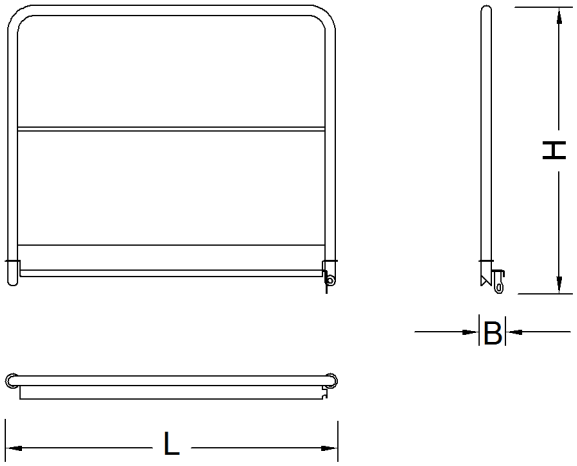

Fig. 52: Dimensions railing part4 for left platform

Name		Value
L	Length	1390 mm 4‘ 7“ ft-in
B	Width	98 mm 3.86“ in
H	Height	1208 mm 4‘ ft-in
Weight		20 kg 44.09 lb

Tab. 35: Technical data railing part4 for left platform

LWN/LR.x/V03.01//Auslieferung/2015-06-03/en

copyright by
LIEBHERR

Grating A for left platform

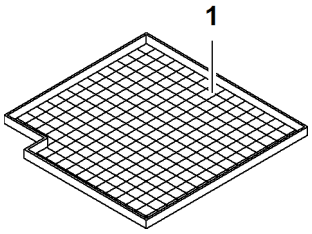

Fig. 53: Grating A for left platform

1 Grating A

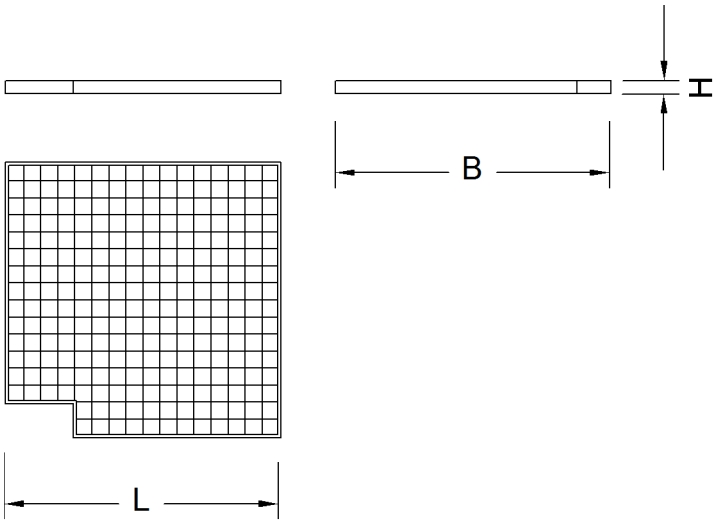

Fig. 54: Dimensions grating A for left platform

Name		Value
L	Length	647 mm 2‘ 1“ ft-in
B	Width	647 mm 2‘ 1“ ft-in
H	Height	30 mm 1.18“ in

Tab. 36: Technical data grating A for left platform

Grating B for left platform

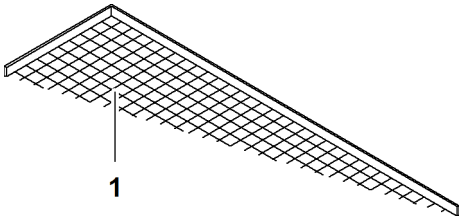

Fig. 55: Grating B for left platform

1 Grating B

LWN/LR.x/V03.01//Auslieferung/2015-06-03/en

copyright by
LIEBHERR

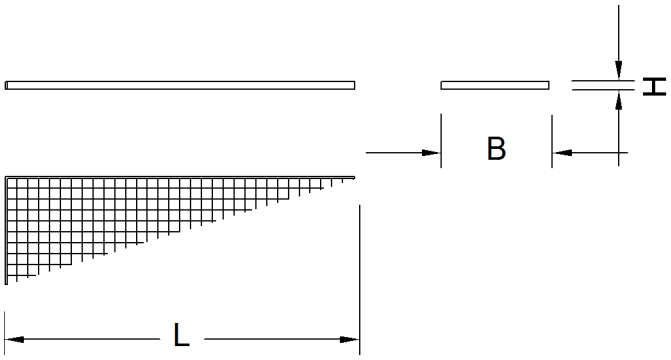

Fig. 56: Dimensions grating B for left platform

Name		Value
L	Length	1287 mm 4‘ 3“ ft-in
B	Width	197 mm 7.76“ in
H	Height	30 mm 1.18“ in

Tab. 37: Technical data grating B for left platform

Grating C for left platform

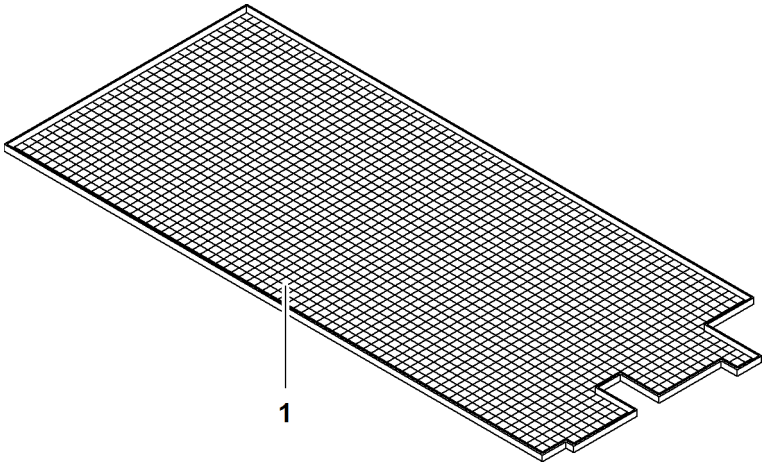

Fig. 57: Grating C for left platform

1 Grating C

LWN/LR.x/V03.01//Auslieferung/2015-06-03/en

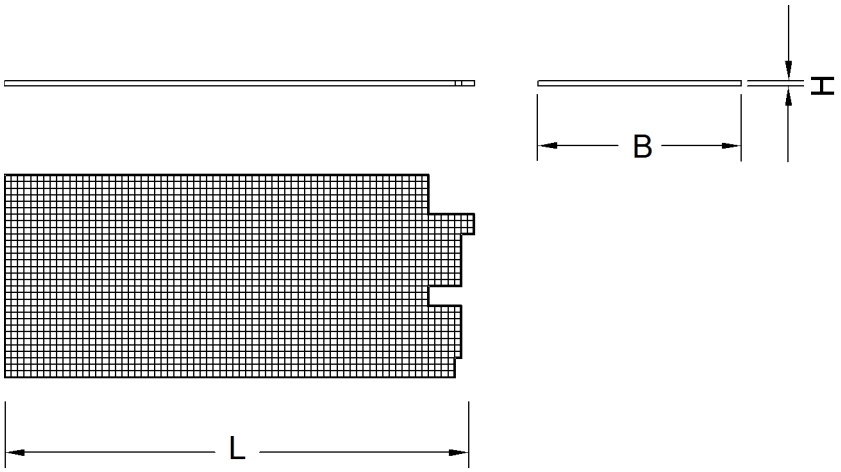

Fig. 58: Dimensions grating C for left platform

Name		Value
L	Length	2887 mm 9‘ 6“ ft-in
B	Width	1247 mm 4‘ 1“ ft-in
H	Height	30 mm 1.18“ in
Weight		50.5 kg 111 lb

Tab. 38: Technical data grating C for left platform

Grating D for left platform

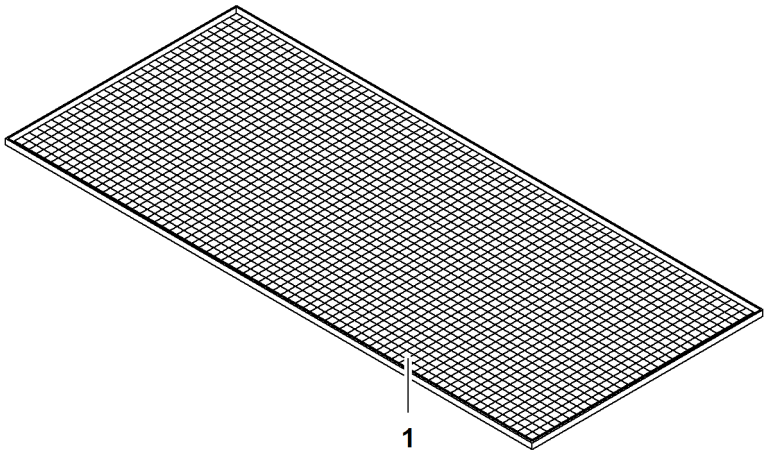

Fig. 59: Grating D for left platform

1 Grating D

LWN/LR.x/V03.01//Auslieferung/2015-06-03/en

copyright by
LIEBHERR

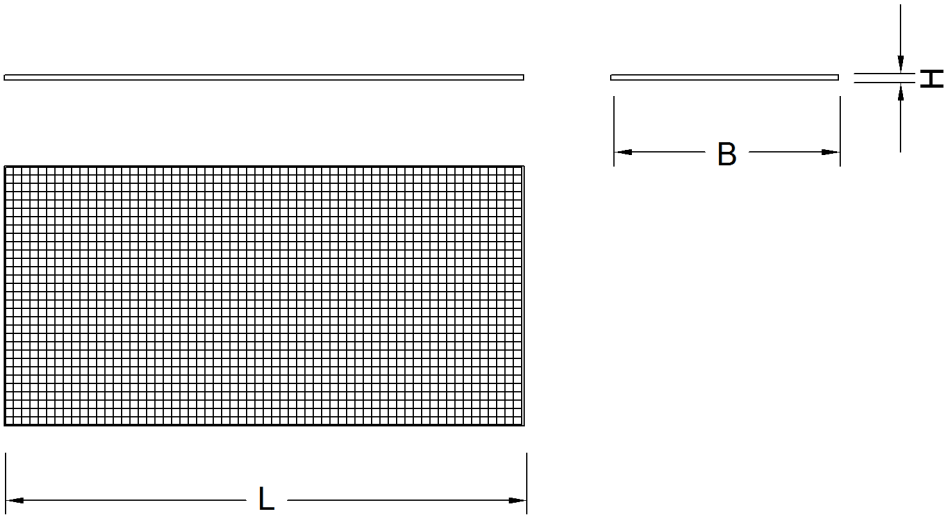

Fig. 60: Dimensions grating D for left platform

Name		Value
L	Length	2847 mm 9‘ 4“ ft-in
B	Width	1247 mm 4‘ 1“ ft-in
H	Height	30 mm 1.18“ in
Weight		49.5 kg 109 lb

Tab. 39: Technical data grating D for left platform

Bracket1

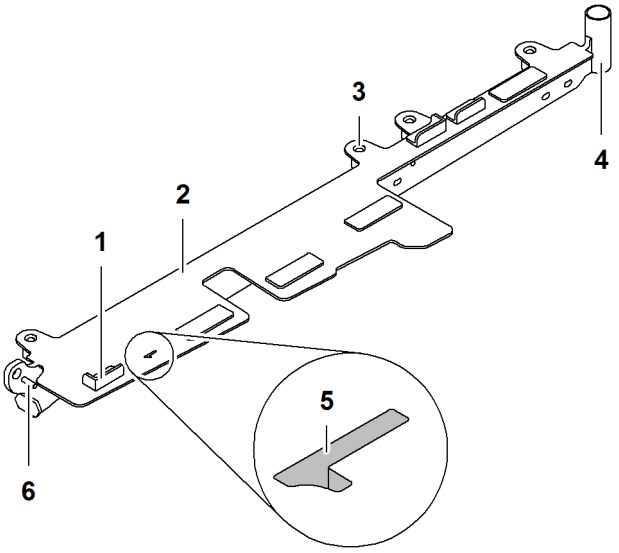

Fig. 61: Bracket1

1 Guide (3x) for grating
2 Bracket1
4 Support for railing
5 Part number

See next page for continuation of the image legend

LWN/LR.x/V03.01//Auslieferung/2015-06-03/en

3 Pin connection point (4x) for plates and diagonals

6 Pin connection point for bracket support

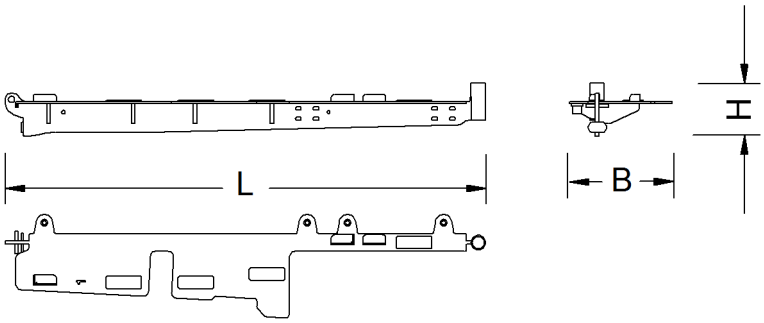

Fig. 62: Dimensions bracket1

Name		Value
L	Length	1902 mm 6‘ 3“ ft-in
B	Width	409 mm 1‘ 4“ ft-in
H	Height	209 mm 8.23“ in
Weight		47 kg 104 lb

Tab. 40: Technical data bracket1

Bracket KnK1

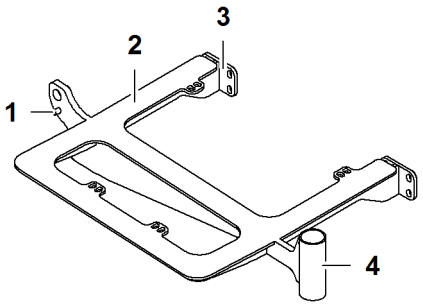

Fig. 63: Bracket KnK1

1 Pin connection point for bracket support K3

2 Bracket KnK1

3 Pin connection point (2x) for bracket1

4 Support for railing part

LWN/LR.x/V03.01//Auslieferung/2015-06-03/en

copyright by
LIEBHERR

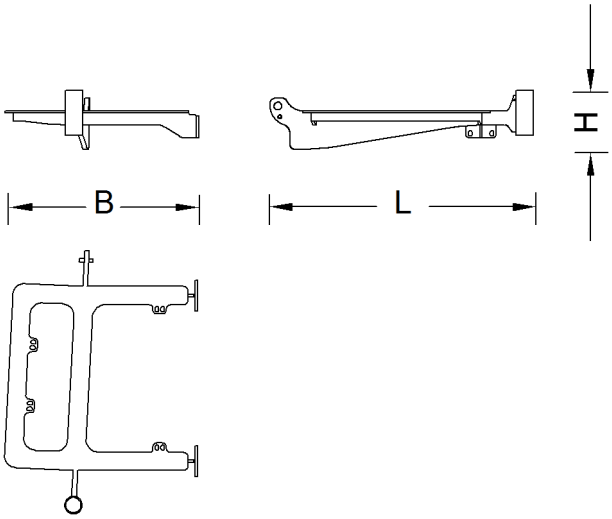

Fig. 64: Dimensions bracket KnK1

Name		Value
L	Length	857 mm 2‘ 10“ ft-in
B	Width	631 mm 2‘ 1“ ft-in
H	Height	192 mm 7.56“ in
Weight		22 kg 48.50 lb

Tab. 41: Technical data bracket KnK1

LWN/LR.x/V03.01//Auslieferung/2015-06-03/en

Bracket2

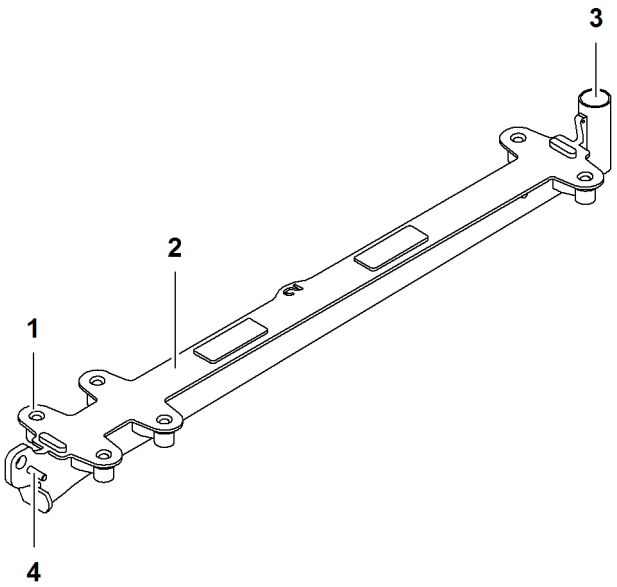

Fig. 65: Bracket2

1	Pin connection point (6x) for plates and diagonals	**3**	Support for railing part
2	Bracket2	**4**	Pin connection point for bracket support

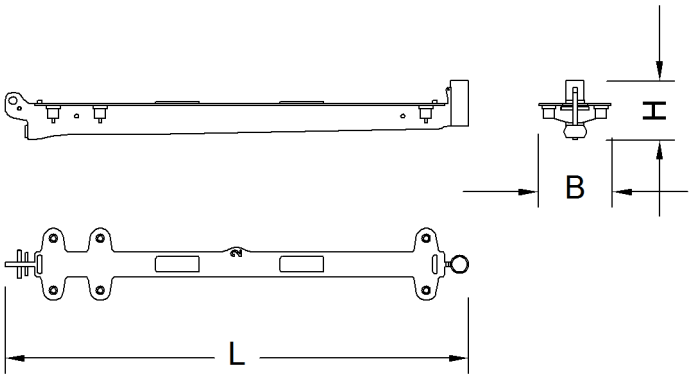

Fig. 66: Dimensions bracket2

Name		Value
L	Length	1491 mm 4‘ 11“ ft-in
B	Width	232 mm 9.13“ in
H	Height	189 mm 7.44“ in
Weight		25.3 kg 55.78 lb

Tab. 42: Technical data bracket2

LWN/LR.x/V03.01//Auslieferung/2015-06-03/en

copyright by
LIEBHERR

Bracket3

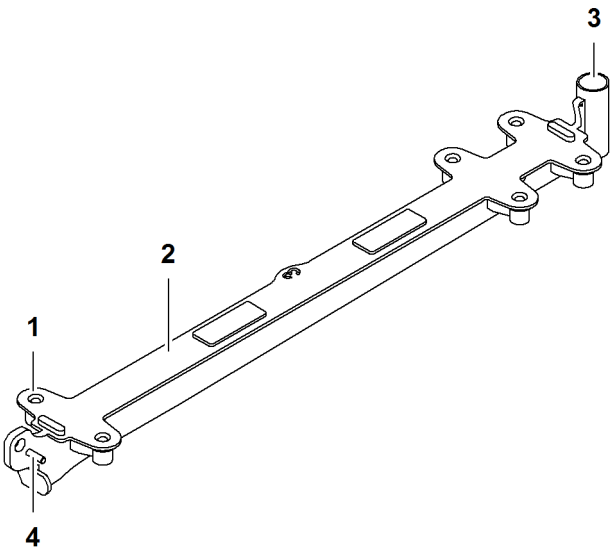

Fig. 67: Bracket3

1	Pin connection point (6x) for plates and diagonals	**3**	Support for railing part
2	Bracket3	**4**	Pin connection point for bracket support

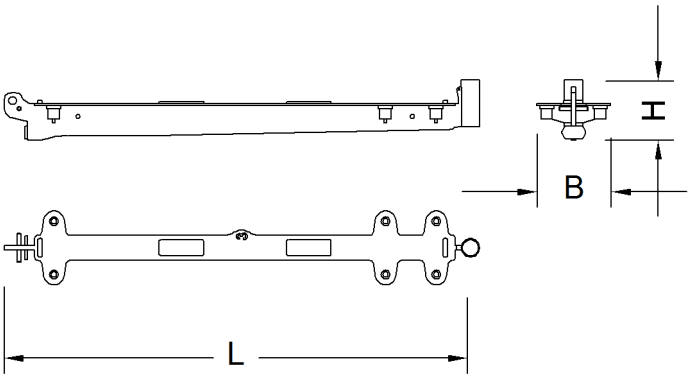

Fig. 68: Dimensions bracket3

Name		Value
L	Length	1491 mm 4‘ 11“ ft-in
B	Width	232 mm 9.13“ in
H	Height	189 mm 7.44“ in
Weight		25.5 kg 56.22 lb

Tab. 43: Technical data bracket3

LWN/LR.x/V03.01//Auslieferung/2015-06-03/en

Bracket4

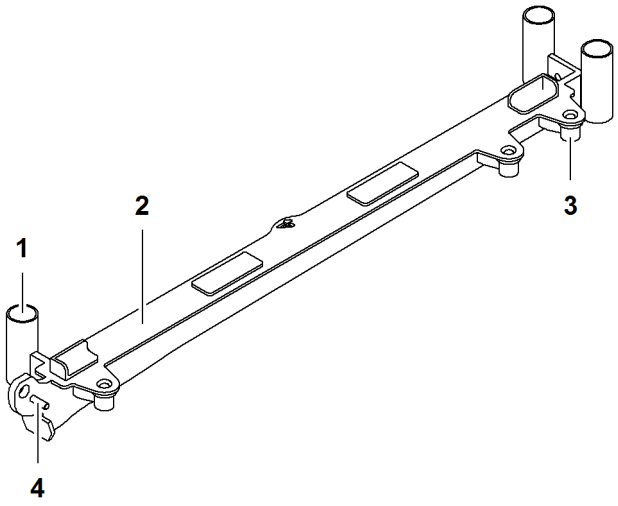

Fig. 69: Bracket4

1	Support (3x) for railing part	**3**	Pin connection point (3x) for plates and diagonals
2	Bracket4	**4**	Pin connection point for bracket support

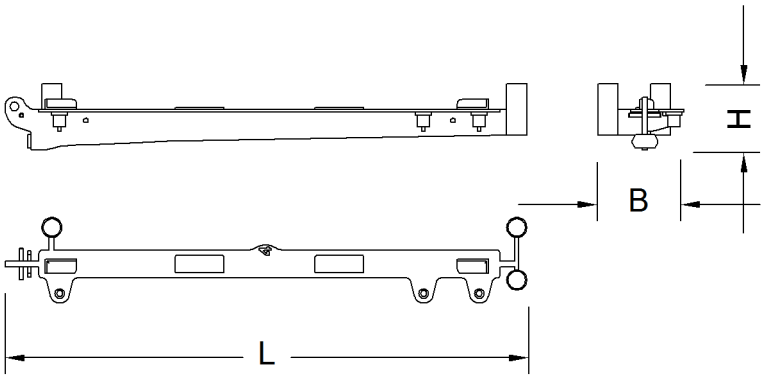

Fig. 70: Dimensions bracket4

Name		Value
L	Length	1491 mm 4‘ 11“ ft-in
B	Width	245 mm 9.65“ in
H	Height	189 mm 7.44“ in
Weight		25 kg 55.11 lb

Tab. 44: Technical data bracket4

LWN/LR.x/V03.01//Auslieferung/2015-06-03/en

copyright by
LIEBHERR

Bracket5

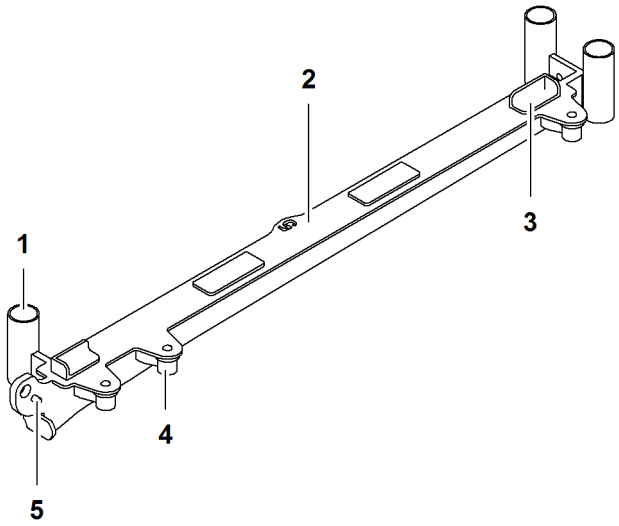

Fig. 71: Bracket5

1 Support (3x) for railing part

2 Bracket5

3 Guide for grating

4 Pin connection point (3x) for plates and diagonals

4 Pin connection point for bracket support

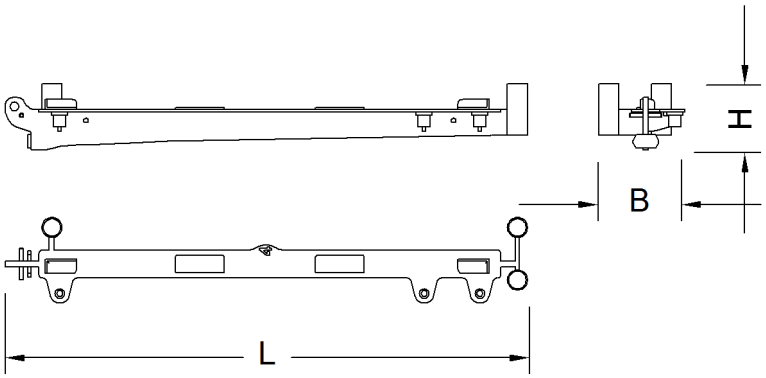

Fig. 72: Dimensions bracket5

Name		Value
L	Length	1491 mm 4‘ 11“ ft-in
B	Width	245 mm 9.65“ in
H	Height	189 mm 7.44“ in
Weight		25.5 kg 56.22 lb

Tab. 45: Technical data bracket5

LWN/LR.x/V03.01//Auslieferung/2015-06-03/en

copyright by LIEBHERR

Bracket6

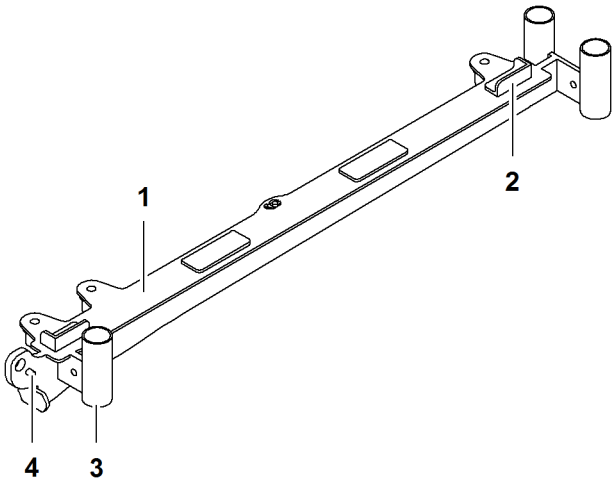

Fig. 73: Bracket6

1 Bracket6
2 Guide for grating
3 Support for railing part
4 Pin connection point for bracket support

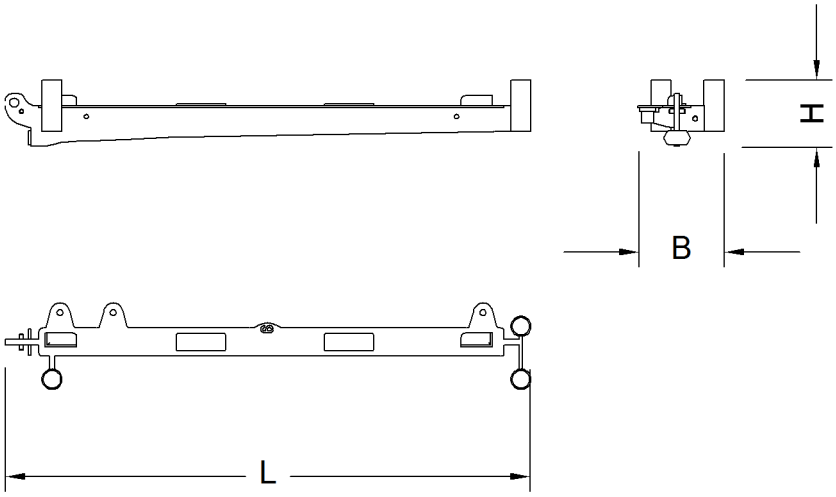

Fig. 74: Dimensions bracket6

Name		Value
L	Length	1491 mm 4‘ 11“ ft-in
B	Width	245 mm 9.65“ in
H	Height	189 mm 7.44“ in
Weight		25 kg 55.11 lb

Tab. 46: Technical data bracket6

LWN/LR.x/V03.01//Auslieferung/2015-06-03/en

copyright by
LIEBHERR

Plate1

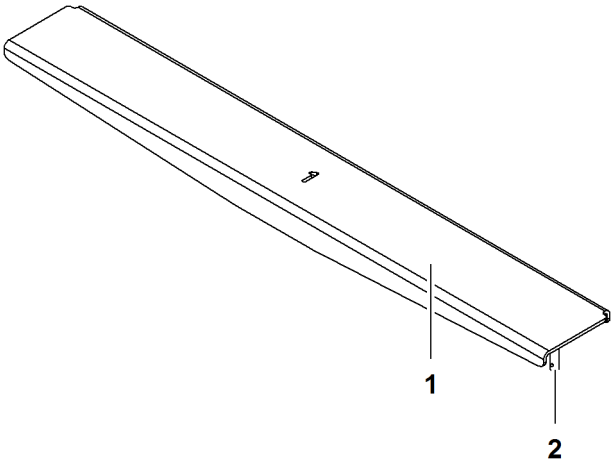

Fig. 75: Plate1

1 Plate1 **2** Pin

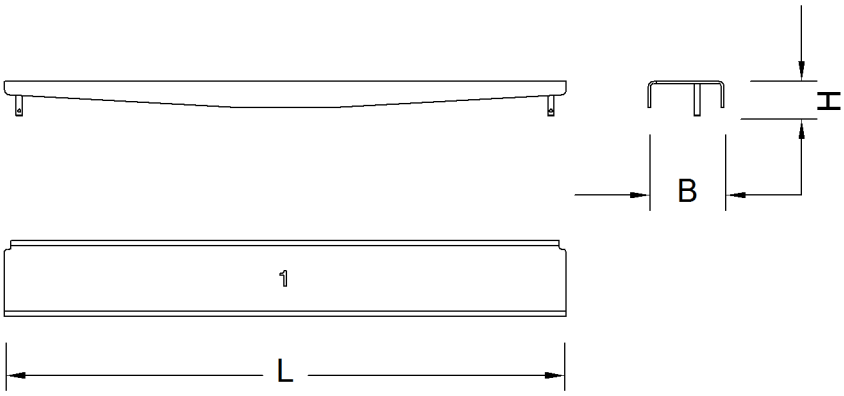

Fig. 76: Dimensions plate1

Name		Value
L	Length	1275 mm 4‘ 2“ ft-in
B	Width	172 mm 6.77“ in
H	Height	79 mm 3.11“ in
Weight		12 kg 26.46 lb

Tab. 47: Technical data plate1

LWN/LR.x/V03.01//Auslieferung/2015-06-03/en

copyright by
LIEBHERR

Plate2

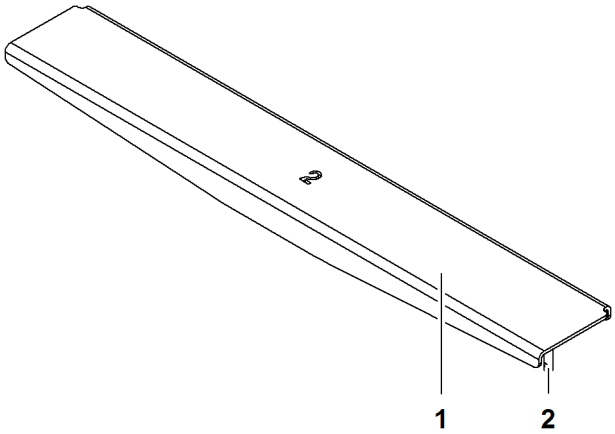

Fig. 77: Plate2

1 Plate2 **2** Pin

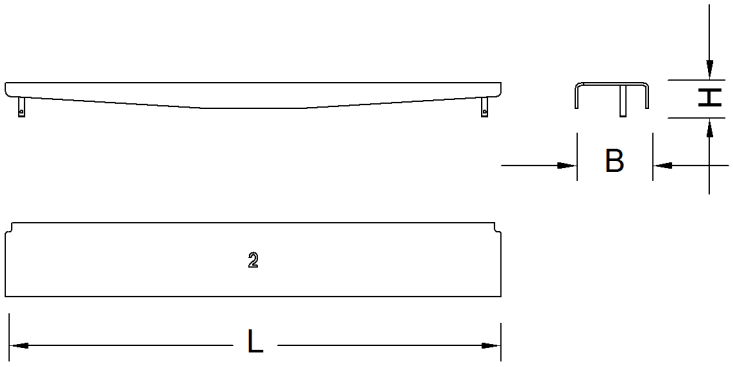

Fig. 78: Dimensions plate2

Name		Value
L	Length	1158 mm 3‘ 10“ ft-in
B	Width	172 mm 6.77“ in
H	Height	79 mm 3.11“ in
Weight		11 kg 24.25 lb

Tab. 48: Technical data plate2

LWN/LR.x/V03.01//Auslieferung/2015-06-03/en

copyright by
LIEBHERR

Plate3

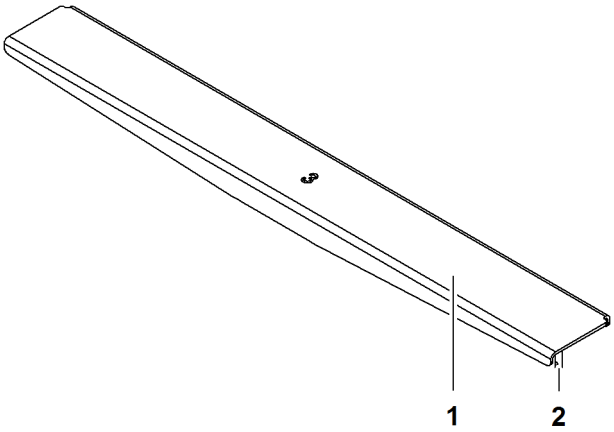

Fig. 79: Plate3

1 Plate3 **2** Pin

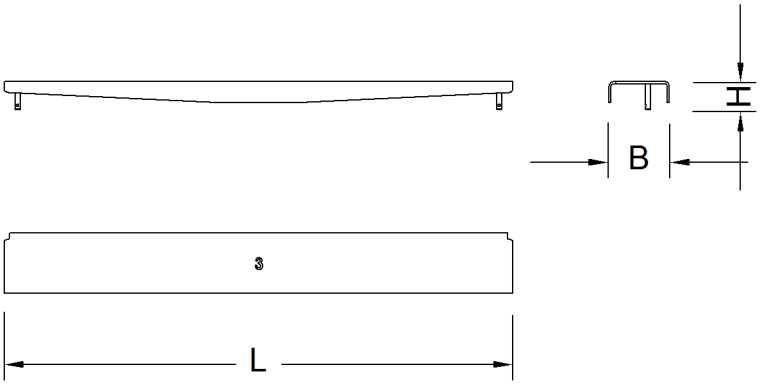

Fig. 80: Dimensions plate3

Name		Value
L	Length	1446 mm 4‘ 9“ ft-in
B	Width	172 mm 6.77“ in
H	Height	79 mm 3.11“ in
Weight		17 kg 37.48 lb

Tab. 49: Technical data plate3

LWN/LR.x/V03.01//Auslieferung/2015-06-03/en

copyright by
LIEBHERR

Plate4

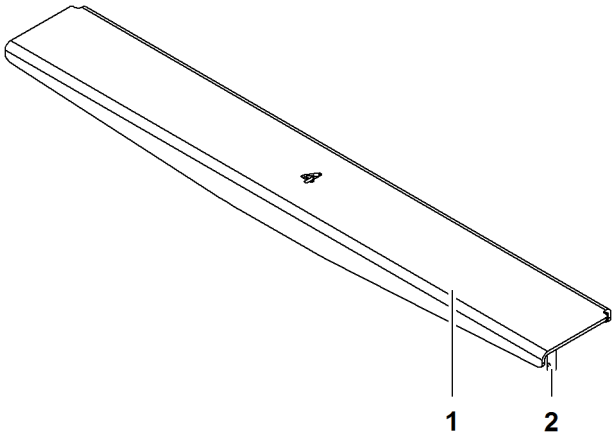

Fig. 81: Plate4

1 Plate4 **2** Pin

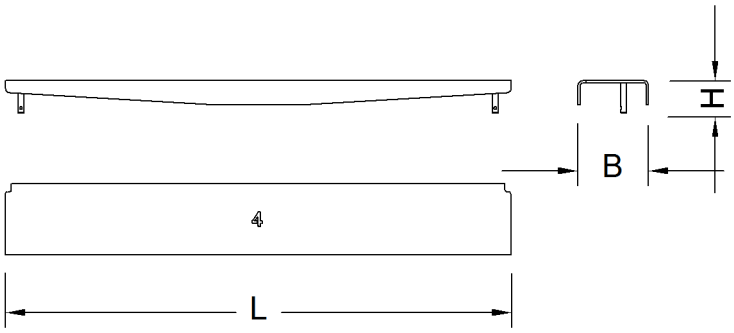

Fig. 82: Dimensions plate4

Name		Value
L	Length	1227 mm 4‘ ft-in
B	Width	172 mm 6.77“ in
H	Height	79 mm 3.11“ in
Weight		14.5 kg 31.97 lb

Tab. 50: Technical data plate4

LWN/LR.x/V03.01//Auslieferung/2015-06-03/en

copyright by
LIEBHERR

Plate5

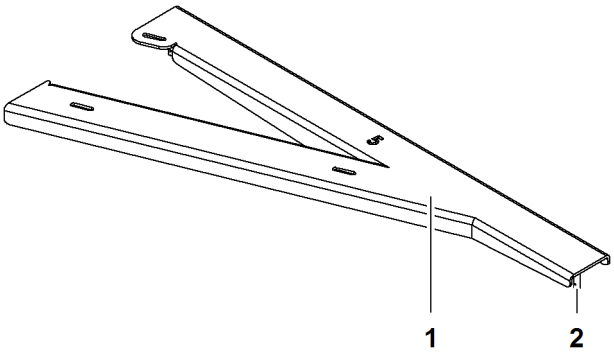

Fig. 83: Plate5

1 Plate5 **2** Pin

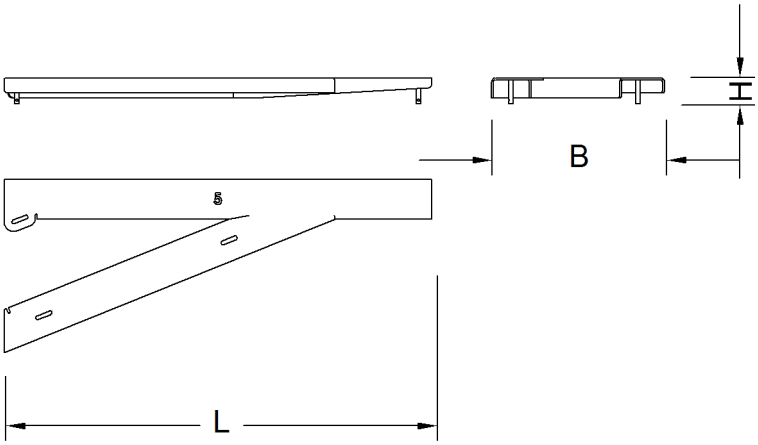

Fig. 84: Dimensions plate5

Name		Value
L	Length	1284 mm 4‘ 3“ ft-in
B	Width	521 mm 1‘ 9“ ft-in
H	Height	79 mm 3.11“ in
Weight		22 kg 48.50 lb

Tab. 51: Technical data plate5

LWN/LR.x/V03.01//Auslieferung/2015-06-03/en

Plate6

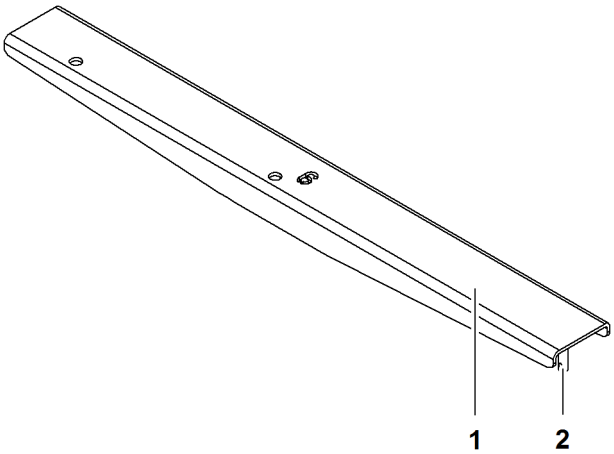

Fig. 85: Plate6

1 Plate6 **2** Pin

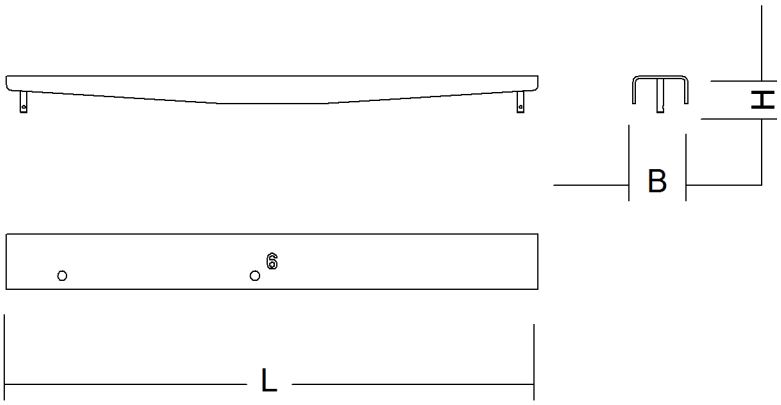

Fig. 86: Dimensions plate6

Name		Value
L	Length	1158 mm 3‘ 10“ ft-in
B	Width	120 mm 4.72“ in
H	Height	79 mm 3.11“ in
Weight		11 kg 24.25 lb

Tab. 52: Technical data plate6

LWN/LR.x/V03.01//Auslieferung/2015-06-03/en

copyright by
LIEBHERR

Plate7

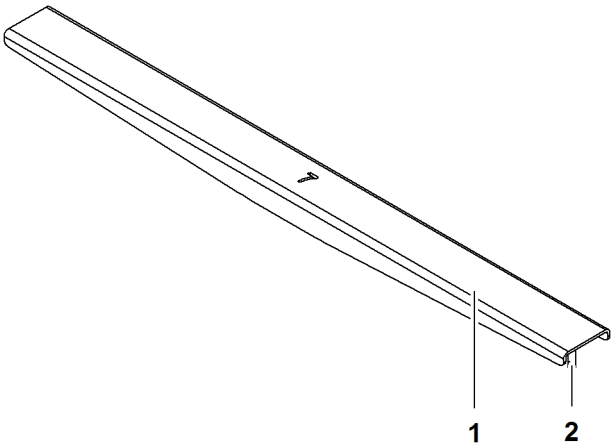

Fig. 87: Plate7

1 Plate7 **2** Pin

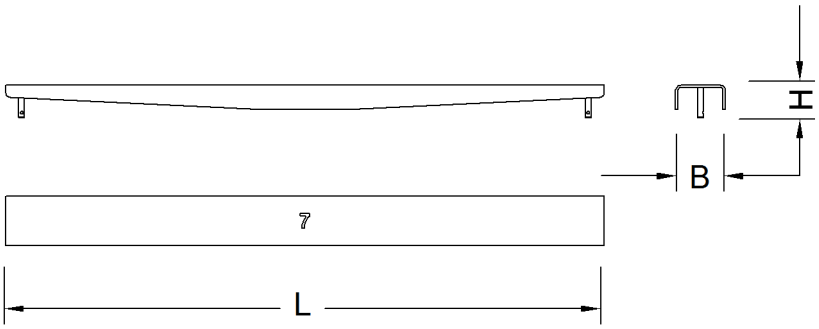

Fig. 88: Dimensions plate7

Name		Value
L	Length	1446 mm 4‘ 9“ ft-in
B	Width	120 mm 4.72“ in
H	Height	79 mm 3.11“ in
Weight		13.3 kg 29.32 lb

Tab. 53: Technical data plate7

LWN/LR.x/V03.01//Auslieferung/2015-06-03/en

Plate8

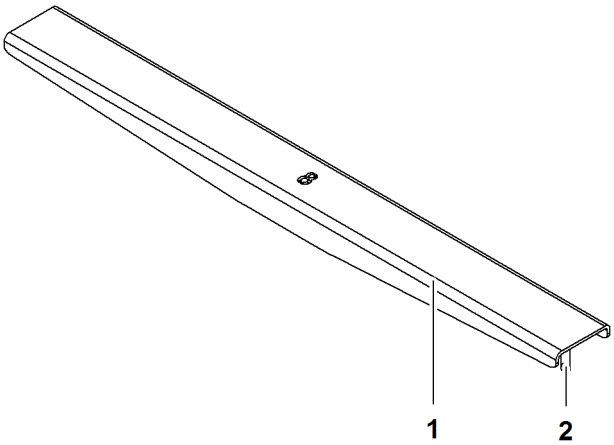

Fig. 89: Plate8

1 Plate8 **2** Pin

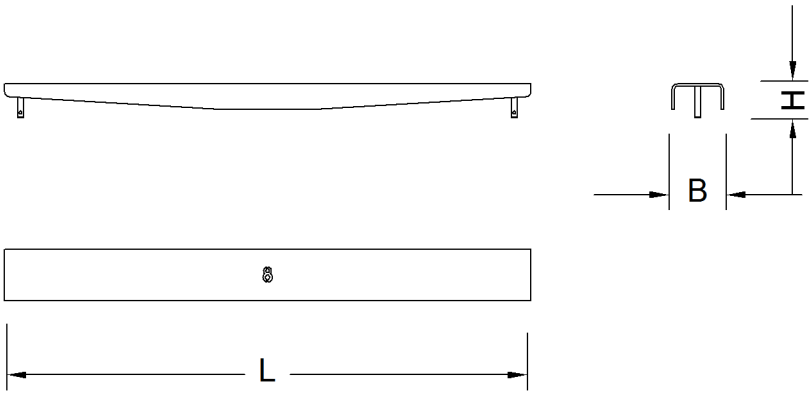

Fig. 90: Dimensions plate8

Name		Value
L	Length	1227 mm 4‘ ft-in
B	Width	120 mm 4.72“ in
H	Height	79 mm 3.11“ in
Weight		11.4 kg 25.13 lb

Tab. 54: Technical data plate8

LWN/LR.x/V03.01//Auslieferung/2015-06-03/en

copyright by
LIEBHERR

Plate13

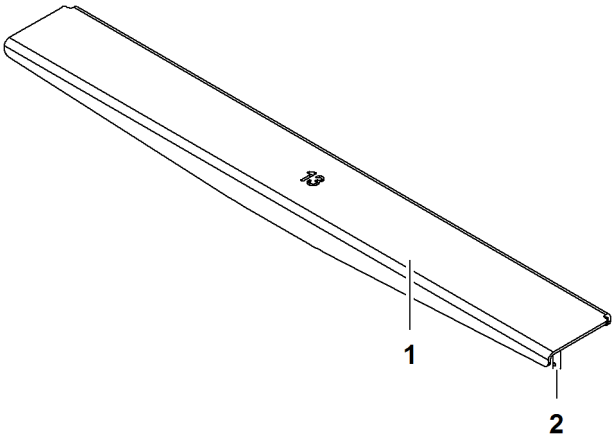

Fig. 91: Plate13

1 Plate13 **2** Pin

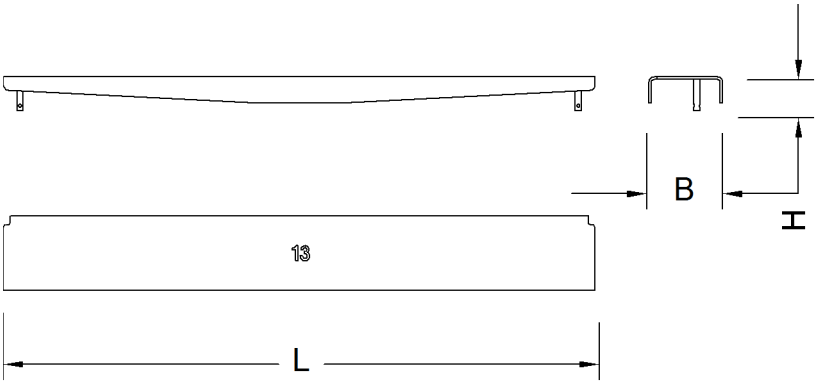

Fig. 92: Dimensions plate13

Name		Value
L	Length	1371 mm 4‘ 6“ ft-in
B	Width	172 mm 6.77“ in
H	Height	79 mm 3.11“ in
Weight		16 kg 35.27 lb

Tab. 55: Technical data plate13

LWN/LR.x/V03.01//Auslieferung/2015-06-03/en

copyright by
LIEBHERR

Plate14

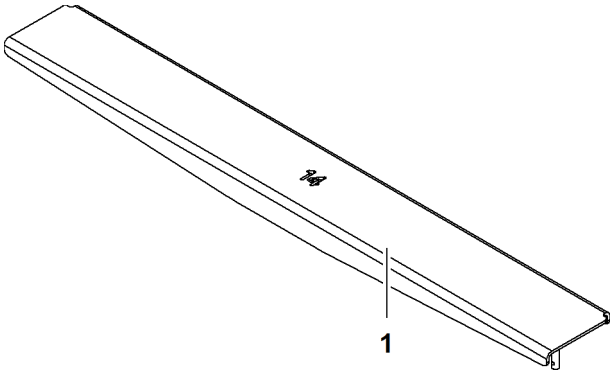

Fig. 93: Plate14

1 Plate14 **2** Pin

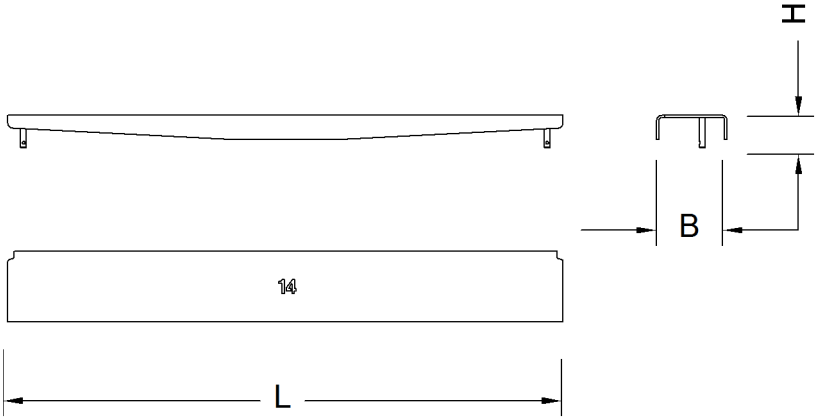

Fig. 94: Dimensions plate14

Name		Value
L	Length	1349 mm 4‘ 5“ ft-in
B	Width	172 mm 6.77“ in
H	Height	79 mm 3.11“ in
Weight		15.7 kg 34.61 lb

Tab. 56: Technical data plate14

LWN/LR.x/V03.01//Auslieferung/2015-06-03/en

copyright by
LIEBHERR

Plate15

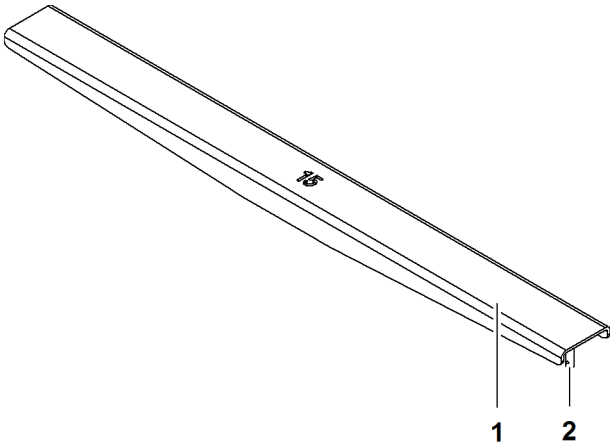

Fig. 95: Plate15

1 Plate15 **2** Pin

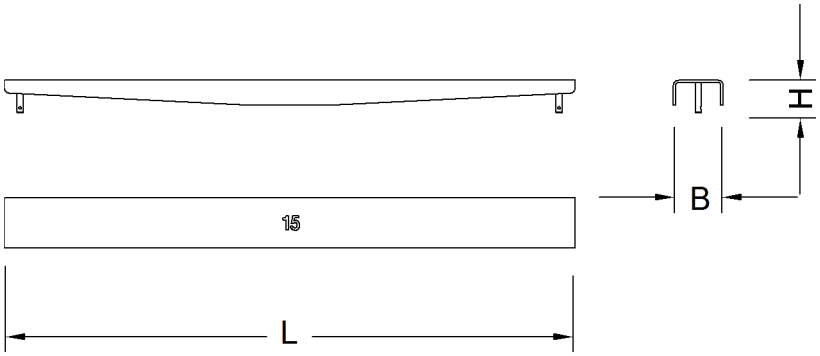

Fig. 96: Dimensions plate15

Name		Value
L	Length	1371 mm 4‘ 6“ ft-in
B	Width	120 mm 4.72“ in
H	Height	79 mm 3.11“ in
Weight		12.7 kg 28.00 lb

Tab. 57: Technical data plate15

LWN/LR.x/V03.01//Auslieferung/2015-06-03/en

copyright by
LIEBHERR

Plate16

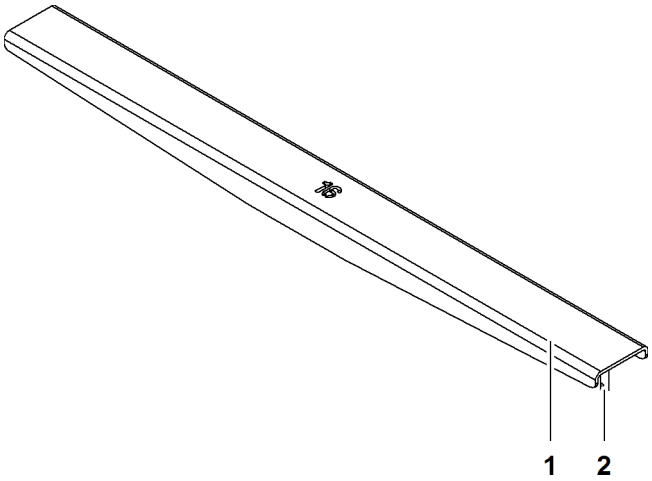

Fig. 97: Plate16

1 Plate16 **2** Pin

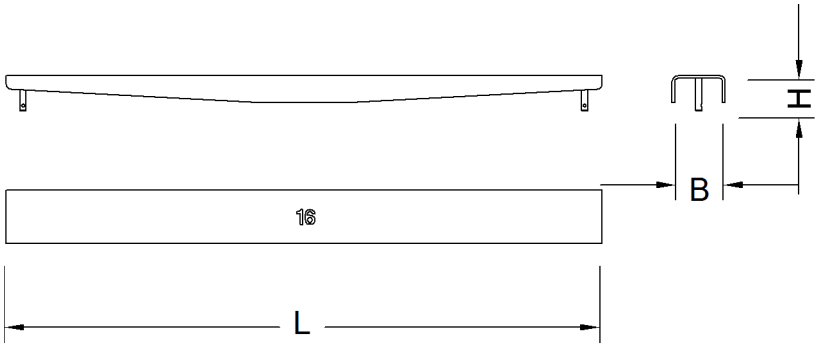

Fig. 98: Dimensions plate16

Name		Value
L	Length	1349 mm 4‘ 5“ ft-in
B	Width	120 mm 4.72“ in
H	Height	79 mm 3.11“ in
Weight		12.5 kg 27.56 lb

Tab. 58: Technical data plate16

LWN/LR.x/V03.01//Auslieferung/2015-06-03/en

copyright by
LIEBHERR

Diagonal9

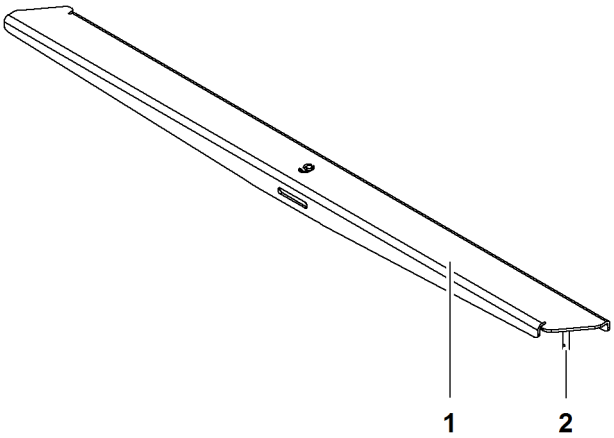

Fig. 99: Diagonal9

1 Diagonal9 **2** Pin

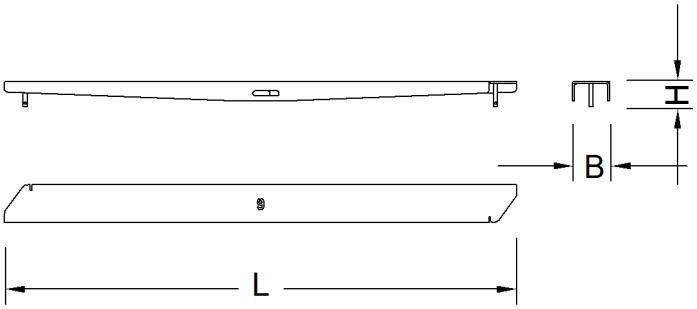

Fig. 100: Dimensions diagonal9

Name		Value
L	Length	1634 mm 5‘ 4“ ft-in
B	Width	120 mm 4.72“ in
H	Height	79 mm 3.11“ in
Weight		14.5 kg 31.97 lb

Tab. 59: Technical data diagonal9

LWN/LR.x/V03.01//Auslieferung/2015-06-03/en

copyright by
LIEBHERR

Diagonal10

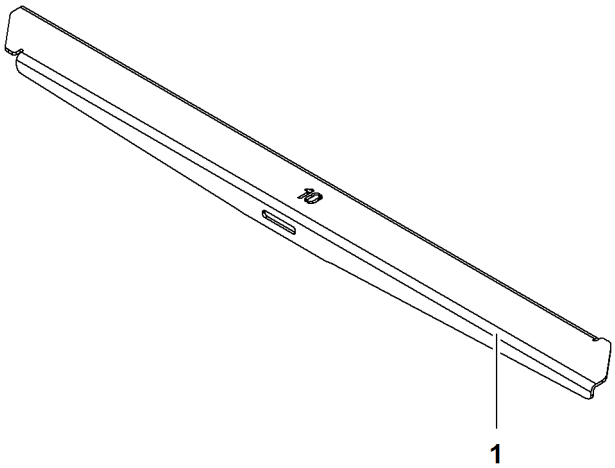

Fig. 101: Diagonal10

1 Diagonal10

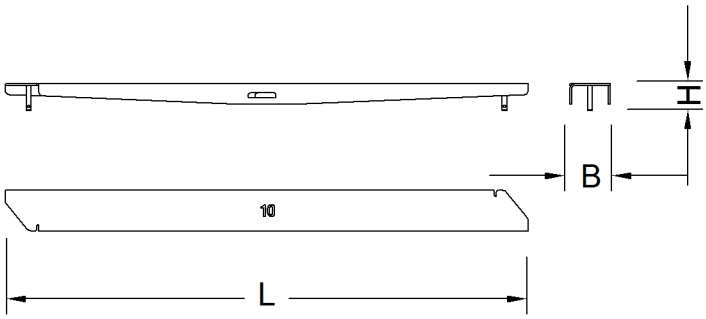

Fig. 102: Dimensions diagonal10

Name		Value
L	Length	1539 mm 5‘ 1“ ft-in
B	Width	120 mm 4.72“ in
H	Height	79 mm 3.11“ in
Weight		13.6 kg 29.98 lb

Tab. 60: Technical data diagonal10

LWN/LR.x/V03.01//Auslieferung/2015-06-03/en

copyright by
LIEBHERR

Diagonal11

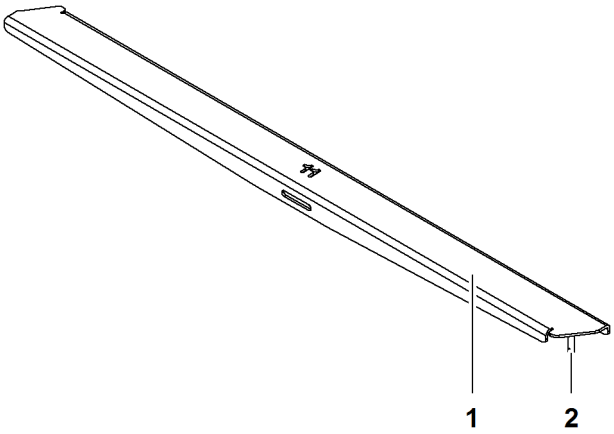

Fig. 103: Diagonal11

1 Diagonal11 **2** Pin

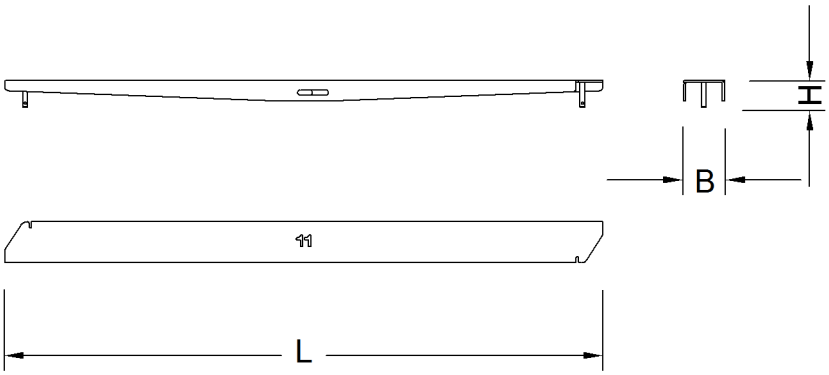

Fig. 104: Dimensions diagonal11

Name		Value
L	Length	1752 mm 5‘ 9“ ft-in
B	Width	120 mm 4.72“ in
H	Height	79 mm 3.11“ in
Weight		15.7 kg 34.61 lb

Tab. 61: Technical data diagonal11

LWN/LR.x/V03.01//Auslieferung/2015-06-03/en

copyright by
LIEBHERR

Diagonal12

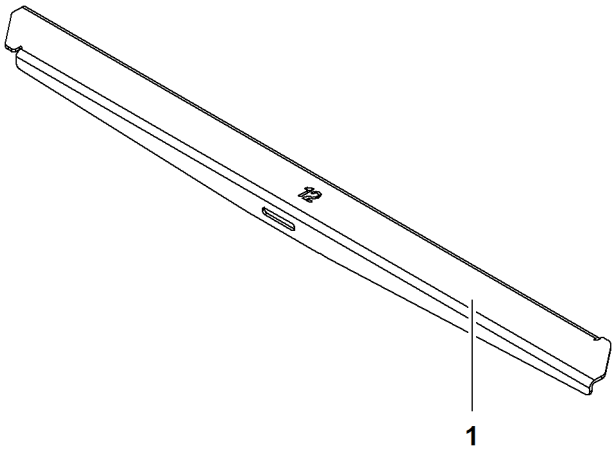

Fig. 105: Diagonal12

1 Diagonal12

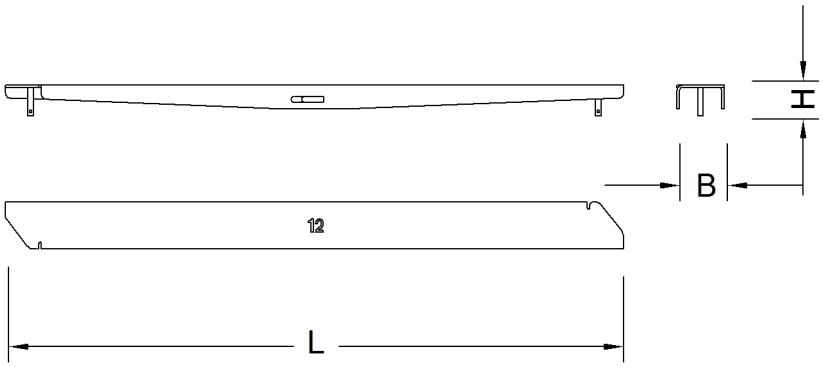

Fig. 106: Dimensions diagonal12

Name		Value
L	Length	1584 mm 5‘ 2“ ft-in
B	Width	120 mm 4.72“ in
H	Height	79 mm 3.11“ in
Weight		14.1 kg 31.08 lb

Tab. 62: Technical data diagonal12

LWN/LR.x/V03.01//Auslieferung/2015-06-03/en

copyright by
LIEBHERR

Diagonal17

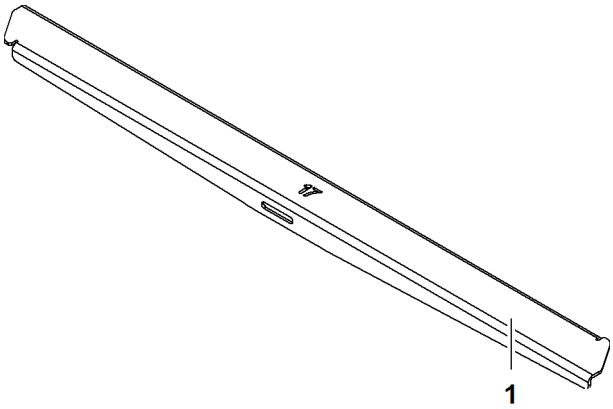

Fig. 107: Diagonal17

1 Diagonal17

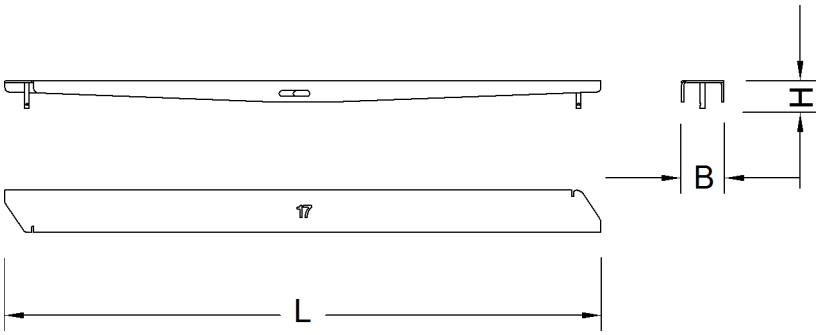

Fig. 108: Dimensions diagonal17

Name		Value
L	Length	1696 mm 5‘ 7“ ft-in
B	Width	120 mm 4.72“ in
H	Height	79 mm 3.11“ in
Weight		15.1 kg 33.29 lb

Tab. 63: Technical data diagonal17

LWN/LR.x/V03.01//Auslieferung/2015-06-03/en

Diagonal18

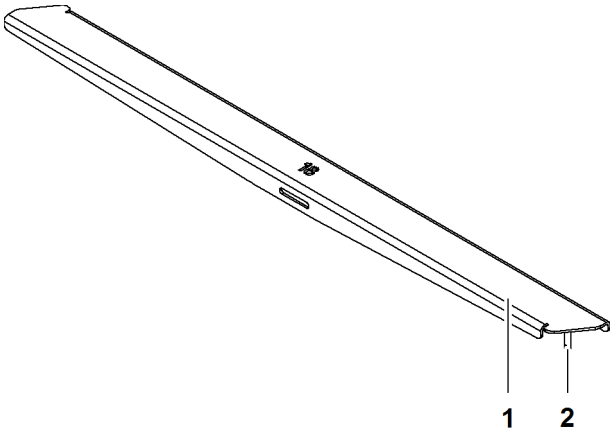

Fig. 109: Diagonal18

1 Diagonal18 **2** Pin

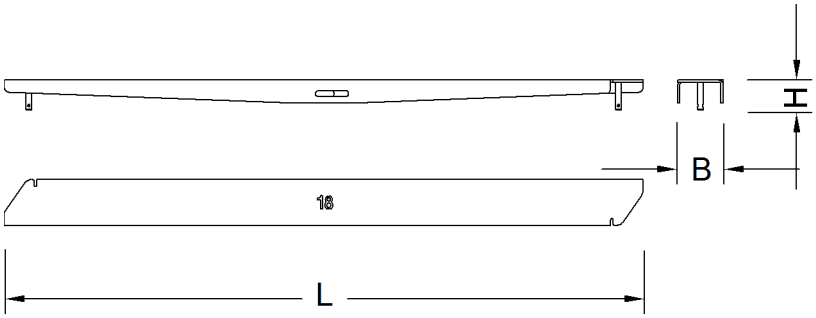

Fig. 110: Dimensions diagonal18

Name		Value
L	Length	1678 mm 5‘ 6“ ft-in
B	Width	120 mm 4.72“ in
H	Height	79 mm 3.11“ in
Weight		15 kg 33.07 lb

Tab. 64: Technical data diagonal18

LWN/LR.x/V03.01//Auslieferung/2015-06-03/en

copyright by
LIEBHERR

Bracket support K1

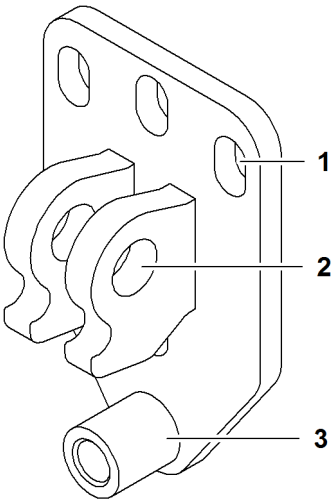

Fig. 111: Bracket support K1

1 Attachment point uppercarriage
2 Attachment point bracket
3 Adjusting screw bracket

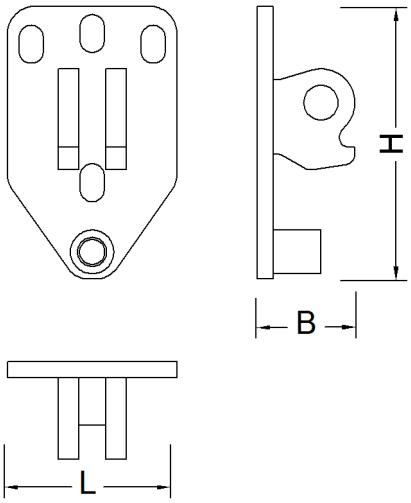

Fig. 112: Dimensions bracket support K1

Name		Value
L	Length	125 mm 4.92“ in
B	Width	72 mm 2.83“ in
H	Height	201 mm 7.91“ in

Tab. 65: Technical data bracket support K1

LWN/LR.x/V03.01//Auslieferung/2015-06-03/en

Bracket support K2

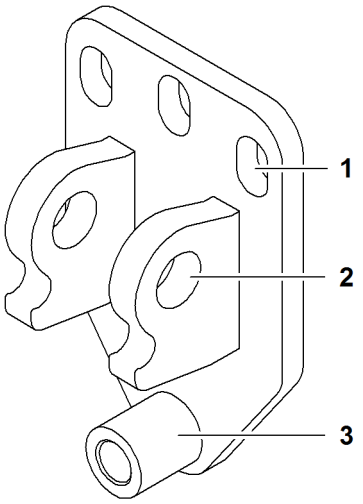

Fig. 113: Bracket support K2

1 Attachment point uppercarriage
2 Attachment point bracket
3 Adjusting screw bracket

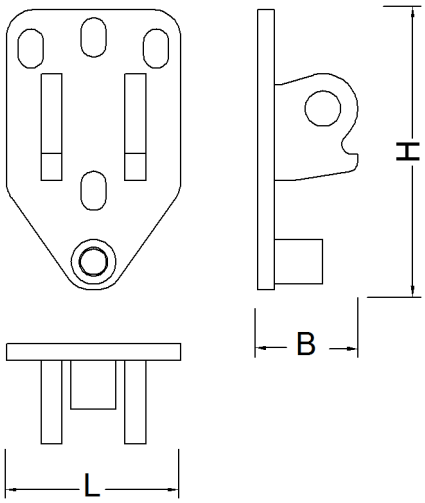

Fig. 114: Dimensions bracket support K2

Name		Value
L	Length	125 mm 4.92“ in
B	Width	72 mm 2.83“ in
H	Height	201 mm 7.91“ in

Tab. 66: Technical data bracket support K2

LWN/LR.x/V03.01//Auslieferung/2015-06-03/en

copyright by
LIEBHERR

Bracket support K3

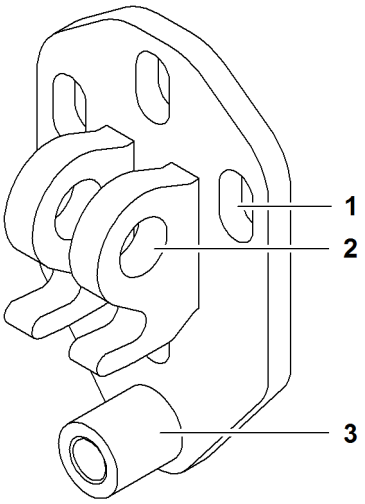

Fig. 115: Bracket support K3

1 Attachment point uppercarriage
2 Attachment point bracket
2 Adjusting screw bracket

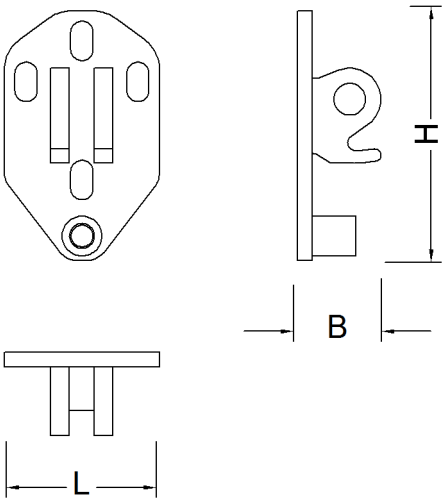

Fig. 116: Dimensions bracket support K3

Name		Value
L	Length	125 mm 4.92“ in
B	Width	67 mm 2.64“ in
H	Height	201 mm 7.91“ in

Tab. 67: Technical data bracket support K3

LWN/LR.x/V03.01//Auslieferung/2015-06-03/en

Railing connection

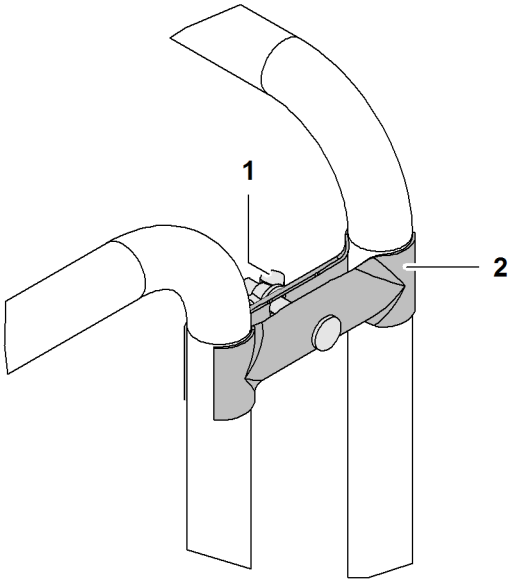

Fig. 117: Railing connection

1 Wing nut
2 Railing connection

Strap

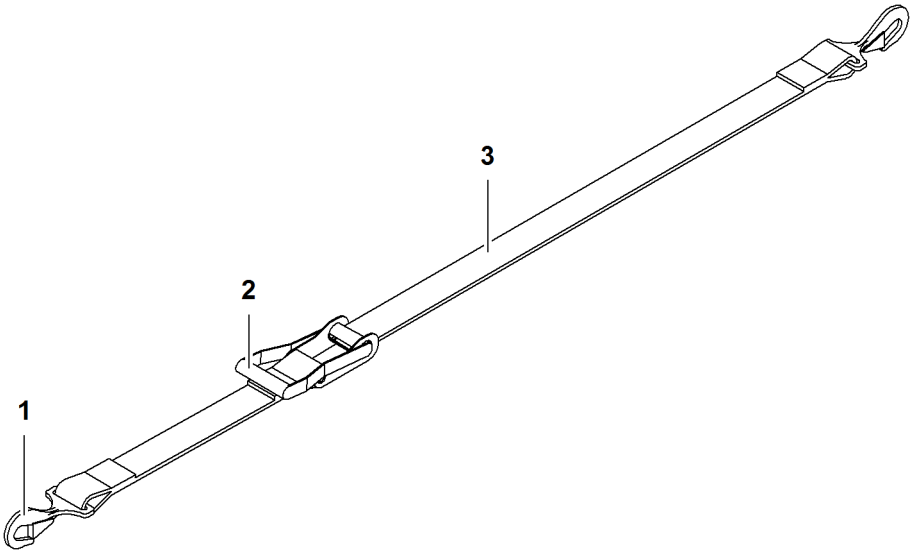

Fig. 118: Strap

1 Hook (2x)
2 Ratchet
3 Strap

Name	Value
Minimum length	1684 mm 5‘ 6“ ft-in
Belt width	50 mm 1.97“ in

LWN/LR.x/V03.01//Auslieferung/2015-06-03/en

copyright by
LIEBHERR

Name	Value
SWL	2.5 t 5,511 lb

Tab. 68: Technical data strap

Strap support

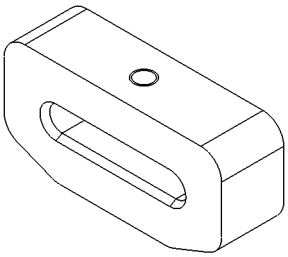

Fig. 119: Strap support

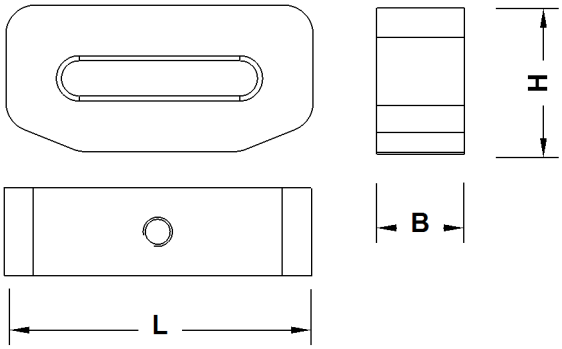

Fig. 120: Dimensions strap support

Name		Value
L	Length	105 mm 4.13“ in
B	Width	30 mm 1.18“ in
H	Height	50 mm 1.97“ in

Tab. 69: Technical data strap support

LWN/LR.x/V03.01//Auslieferung/2015-06-03/en

1.7.9 Undercarriage

Undercarriage with fixed track width

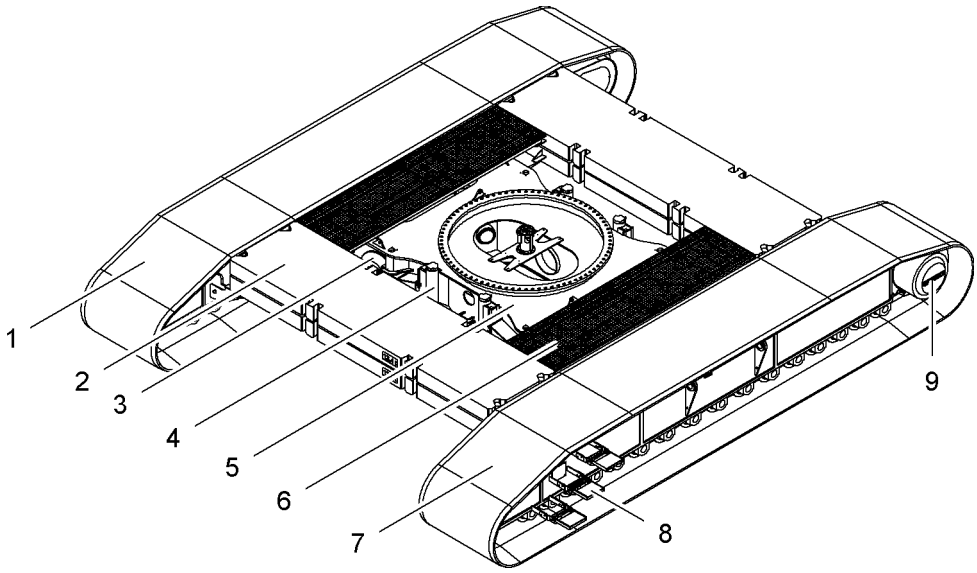

Fig. 121: Undercarriage with fixed track width

1	Right crawler side frame	**6**	Platforms
2	Carbody counterweight slab (4x)	**7**	Left crawler side frame
3	Base plate for jack (4x)	**8**	Steps
4	Jack (4x)	**9**	Tumbler (2x)
5	Center part		

The crawler side frames **1 + 7**
– are attached to the center part by two pins at the front and the back.
– can be detached from the center part for transport.

The four carbody counterweight slabs **2**
– are attached to the front and rear of the undercarriage.
– ensure increased stability.

The base plates **3** for the jacks are located on the center part.

The jacks **4** support the basic machine when necessary.

The center part **5** of the undercarriage
– is a welded structure.
– supports the rotatable uppercarriage.

The folding steps **6** and platforms **6** allow safe access to the cabin and the uppercarriage.

LWN/LR.x/V03.01//Auslieferung/2015-06-03/en

copyright by
LIEBHERR

Undercarriage* with adjustable track width

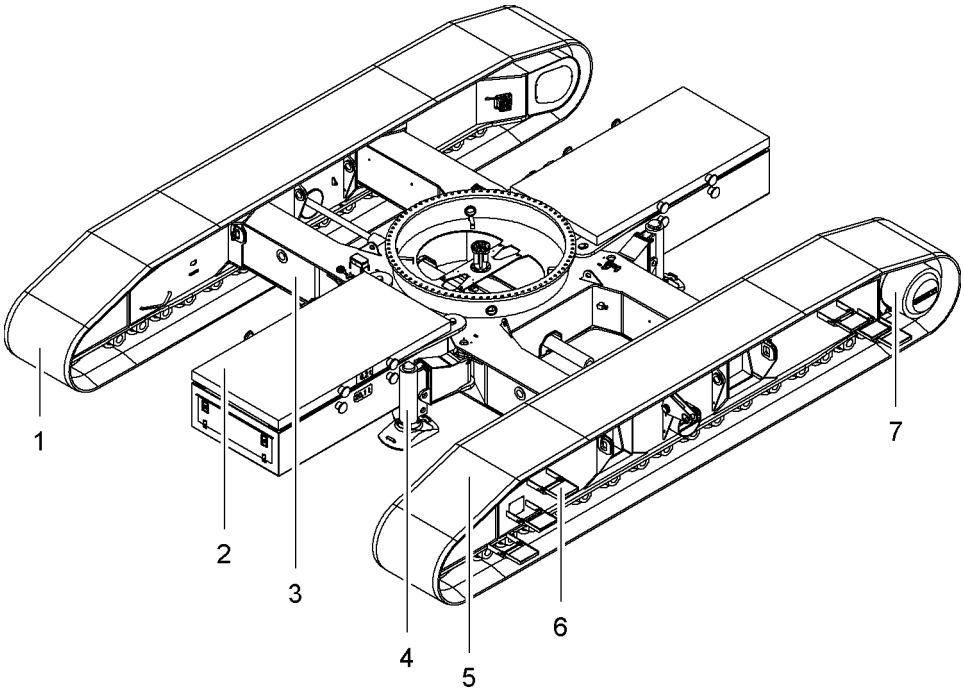

Fig. 122: Undercarriage with adjustable track width*

1	Right crawler side frame	**5**	Left crawler side frame
2	Carbody counterweight slab (4x)	**6**	Steps
3	Center part	**7**	Tumbler (2x)
4	Jack (4x)		

The crawler side frames **1 + 5**:
– are attached to the center part by two pins at the front and the back.
– can be detached from the center part for transport.
– can be pinned as narrow, medium or wide track.

The four carbody counterweight slabs **2**:
– are attached to the front and rear of the undercarriage.
– ensure increased stability.

The jacks **4** support the basic machine when necessary.

The center part **3** of the undercarriage:
– is a welded structure.
– supports the rotatable uppercarriage.

The folding steps **6** allow safe access to cabin and uppercarriage.

LWN/LR.x/V03.01//Auslieferung/2015-06-03/en

copyright by
LIEBHERR

1.7.10 Crawler side frame

Crawler side frame for undercarriage with fixed track width

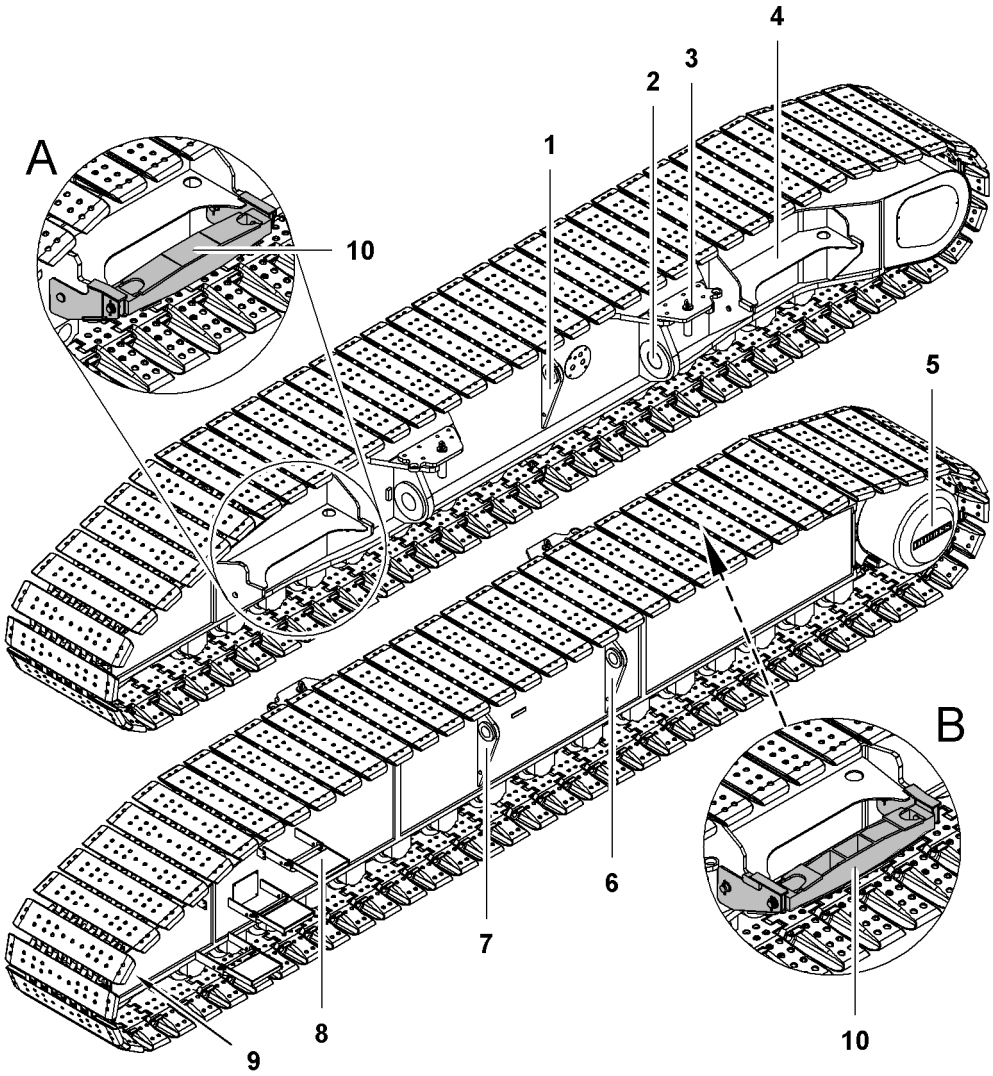

Fig. 123: Crawler side frame for undercarriage with fixed track width

1	Pivot point for folding bracket	**7**	Pivot point for folding bracket
2	Pin connection point (4x) for center part	**8**	Step (6x)
3	Pins (4x) for pin connection with center part	**9**	Idler wheel (2x)
4	Support (4x) for carbody counter-weight	**10**	Support (4x) for carbody counter-weight (1500 mm (4‘ 11“ ft-in) base plates)
5	Tumbler (2x)	**A**	Detail right crawler side frame (1500 mm (4‘ 11“ ft-in) base plates)
6	Pivot point for folding bracket	**B**	Detail left crawler side frame (1500 mm (4‘ 11“ ft-in) base plates)

LWN/LR.x/V03.01//Auslieferung/2015-06-03/en

copyright by LIEBHERR

The following base plates are available for the crawler side frames:
– 1200 mm (3‘ 11“ ft-in) base plates
– 1500 mm (4‘ 11“ ft-in) base plates

Detail **A + B** shows the additional supports **10** for the carbody counterweight slabs for crawler side frames with 1500 mm (4‘ 11“ ft-in) base plates.

Foldable brackets are attached to the pivot points **1 + 6 + 7** onto which crawler side frames are attached for loading.

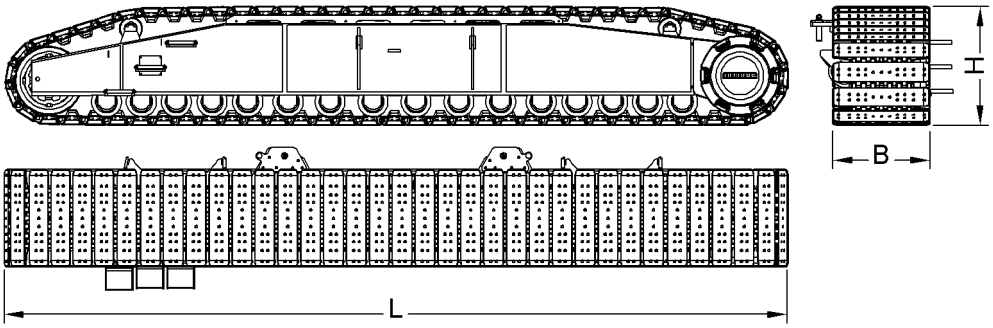

Fig. 124: Dimensions crawler side frame for undercarriage with fixed track width

The technical data apply per crawler side frame.

Name			Value
L	Length crawler side frame	with 1200 mm (3‘ 11“ ft-in) base plates	9674 mm 31‘ 9“ ft-in
		with 1500 mm (4‘ 11“ ft-in) base plates	9694 mm 31‘ 10“ ft-in
B	Width crawler side frame	with 1200 mm (3‘ 11“ ft-in) base plates	1200 mm 3‘ 11“ ft-in
		with 1500 mm (4‘ 11“ ft-in) base plates	1500 mm 4‘ 11“ ft-in
H	Height crawler side frame	with 1200 mm (3‘ 11“ ft-in) base plates	1462 mm 4‘ 10“ ft-in
		with 1500 mm (4‘ 11“ ft-in) base plates	1482 mm 4‘ 10“ ft-in
Weight crawler side frame with 1200 mm (3‘ 11“ ft-in) base plates			21880 kg 48,236 lb
Weight crawler side frame with 1500 mm (4‘ 11“ ft-in) base plates			25702 kg 56,662 lb

Tab. 70: Technical data crawler side frame for undercarriage with fixed track width

LWN/LR.x/V03.01//Auslieferung/2015-06-03/en

copyright by
LIEBHERR

Crawler side frame for undercarriage* with adjustable track width

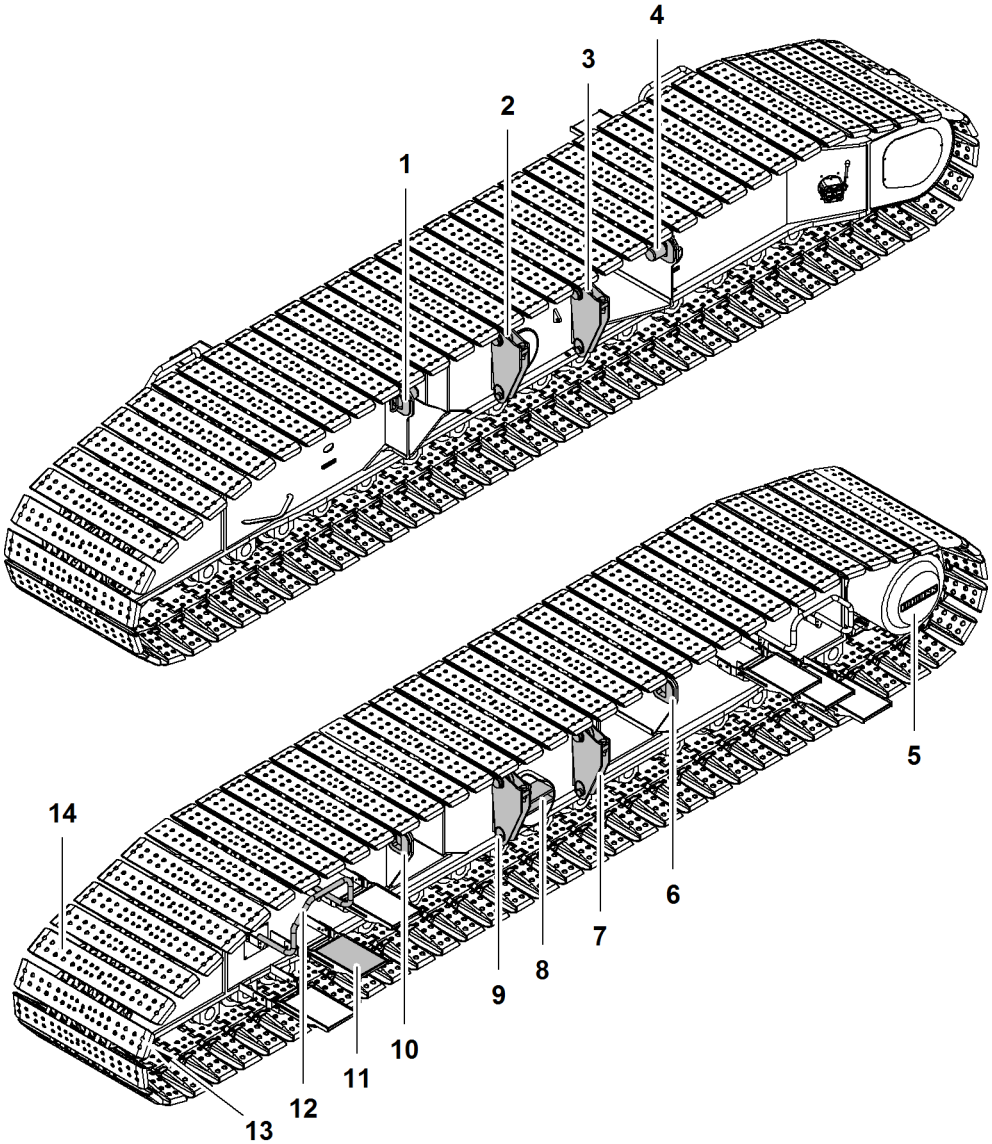

Fig. 125: Crawler side frame for undercarriage with adjustable track width*

1	Pin connection point for center part	**8**	Pin connection point (2x) for track width adjusting cylinder
2	Folding bracket	**9**	Folding bracket
3	Folding bracket	**10**	Pin connection point for center part
4	Pin connection point for center part	**11**	Steps (12x)
5	Tumbler (2x)	**12**	Handrail (4x)
6	Pin connection point for center part	**13**	Idler wheel (2x)
7	Folding bracket	**14**	Base plates

The following base plates are available for the crawler side frames:
– 1200 mm (3‘ 11“ ft-in) base plates
– 1500 mm (4‘ 11“ ft-in) base plates

LWN/LR.x/V03.01//Auslieferung/2015-06-03/en

copyright by
LIEBHERR

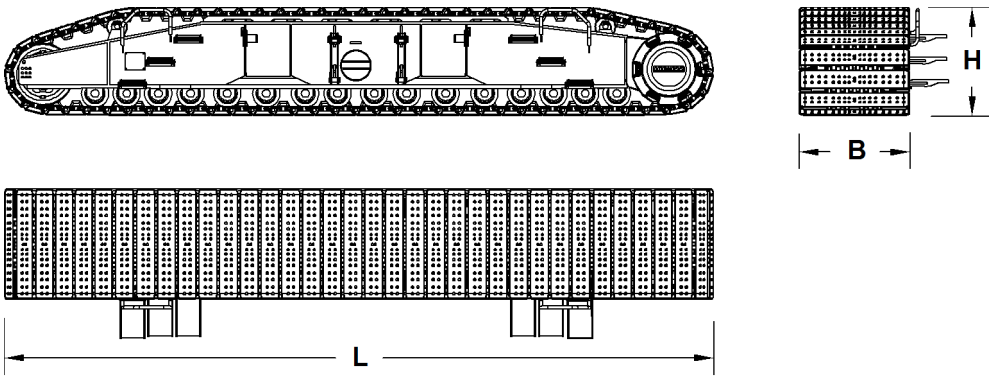

Fig. 126: Dimensions crawler side frames for undercarriages with adjustable track width

The technical data apply per crawler side frame.

Name			Value
L	Length crawler side frame	with 1200 mm (3‘ 11“ ft-in) base plates	9683 mm 31‘ 9“ ft-in
		with 1500 mm (4‘ 11“ ft-in) base plates	9703 mm 31‘ 10“ ft-in
B	Width crawler side frame	with 1200 mm (3‘ 11“ ft-in) base plates	1200 mm 3‘ 11“ ft-in
		with 1500 mm (4‘ 11“ ft-in) base plates	1500 mm 4‘ 11“ ft-in
H	Height crawler side frame	with 1200 mm (3‘ 11“ ft-in) base plates	1474 mm 4‘ 10“ ft-in
		with 1500 mm (4‘ 11“ ft-in) base plates	1482 mm 4‘ 10“ ft-in
Weight crawler side frame with 1200 mm (3‘ 11“ ft-in) base plates			22600 kg 49,824 lb
Weight crawler side frame with 1500 mm (4‘ 11“ ft-in) base plates			26200 kg 57,760 lb

Tab. 71: Technical data crawler side frame for undercarriage with adjustable track width

LWN/LR.x/V03.01//Auslieferung/2015-06-03/en

copyright by
LIEBHERR

1.7.11 Platforms at undercarriage with fixed track width

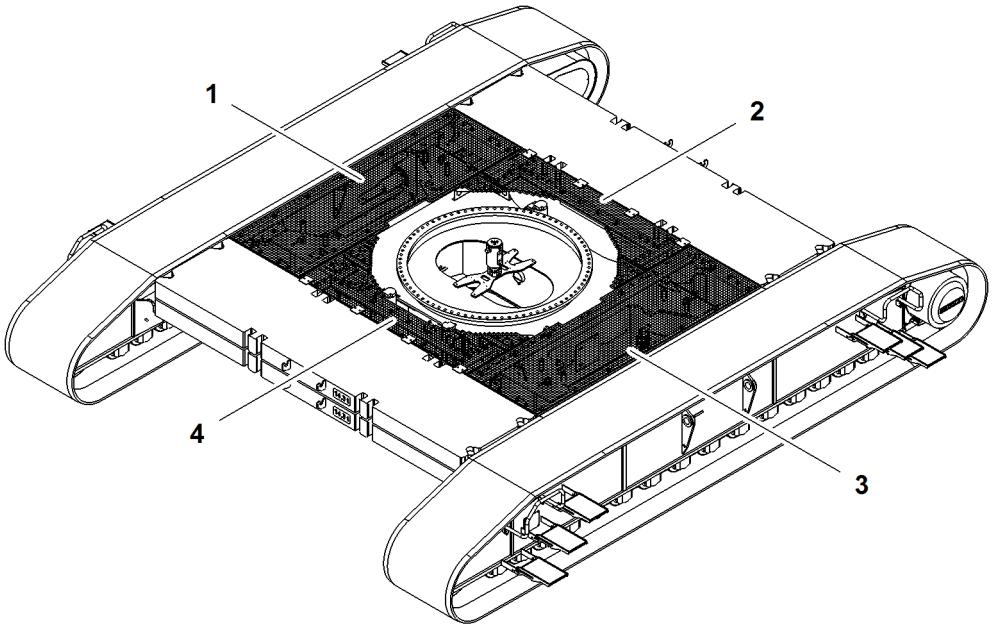

Fig. 127: Platforms at undercarriage with fixed track width

1	Right platform	**3**	Left platform
2	Rear platform	**4**	Front platform

The platforms **1 + 3** are placed on brackets on the carbody counterweight (For more information see: Carbody counterweight for undercarriage with fixed track width, page 146) .

The platforms **2 + 4** are placed on brackets on the undercarriage.

The platforms have support brackets.

The platforms **1 + 3** are fitted with distancers. The distancers are located on the undercarriage to prevent sagging.

Right and left platform

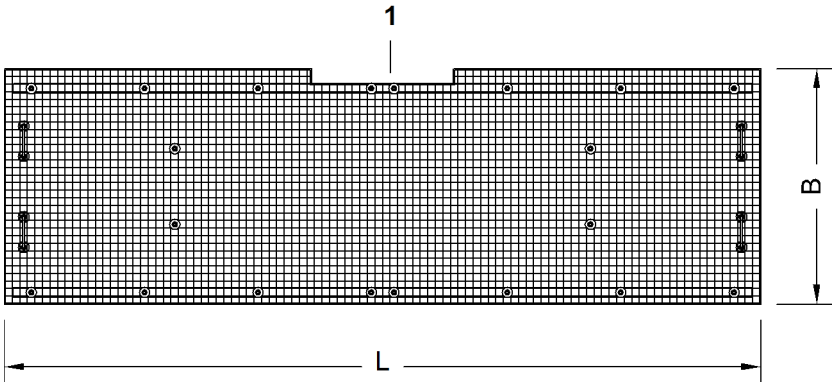

Fig. 128: Dimensions right and left platform

1 Recess

LWN/LR.x/V03.01//Auslieferung/2015-06-03/en

copyright by
LIEBHERR

Name			Value
L	Length	with 1200 mm (3‘ 11“ ft-in) base plates	4007 mm 13‘ 2“ ft-in
		with 1500 mm (4‘ 11“ ft-in) base plates	4010 mm 13‘ 2“ ft-in
B	Width	with 1200 mm (3‘ 11“ ft-in) base plates	1247 mm 4‘ 1“ ft-in
		with 1500 mm (4‘ 11“ ft-in) base plates	1005 mm 3‘ 4“ ft-in
Weight platform with 1200 mm (3‘ 11“ ft-in) base plates			100 kg 220 lb
Weight platform with 1500 mm (4‘ 11“ ft-in) base plates			75 kg 165 lb

Tab. 72: Technical data right and left platform

Front and rear platform

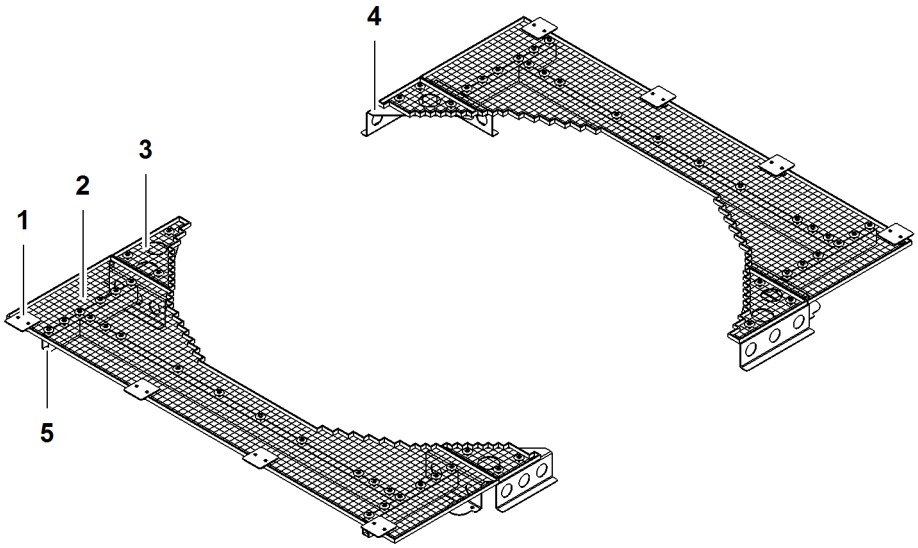

Fig. 129: Front and rear platform

1 Support plate (8x)
2 Platform (2x)
3 Corner platform (4x)
4 Steel plate (4x)
5 Frame (2x)

The frames **5** and support plates **1** are already mounted upon delivery.

LWN/LR.x/V03.01//Auslieferung/2015-06-03/en

Platform

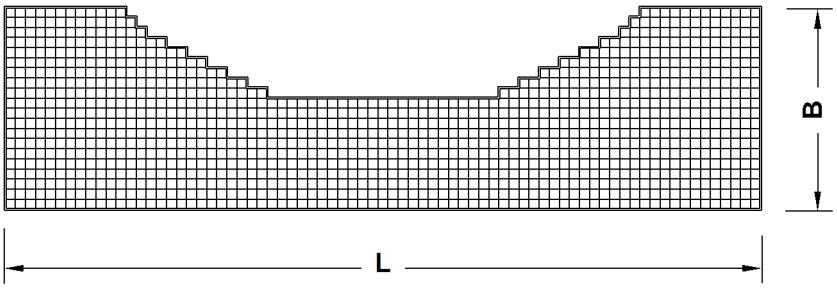

Fig. 130: Platform dimensions

Name		Value
L	Length	3007 mm 9‘ 10“ ft-in
B	Width	807 mm 2‘ 8“ ft-in
Weight		82 kg 181 lb

Tab. 73: Technical data platform

Right corner platform

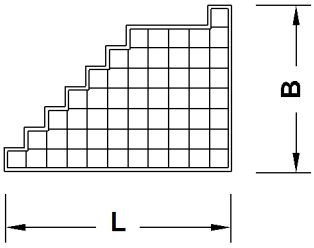

Fig. 131: Dimensions right corner platform

Name		Value
L	Length	447 mm 1‘ 6“ ft-in
B	Width	327 mm 1‘ 1“ ft-in
Weight		2.5 kg 5.51 lb

Tab. 74: Technical data right corner platform

LWN/LR.x/V03.01//Auslieferung/2015-06-03/en

copyright by
LIEBHERR

Left corner platform

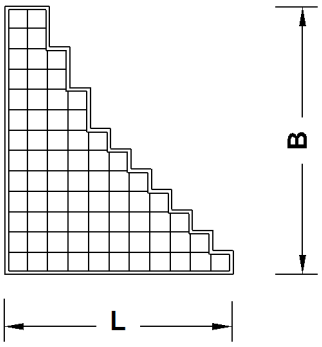

Fig. 132: Left corner platform

Name		Value
L	Length	447 mm 1‘ 6“ ft-in
B	Width	527 mm 1‘ 9“ ft-in
Weight		3 kg 6.61 lb

Tab. 75: Technical data left corner platform

Steel plates

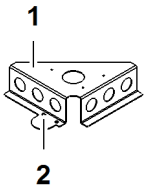

Fig. 133: Steel plates

1 Plate

2 Attachment shackle

LWN/LR.x/V03.01//Auslieferung/2015-06-03/en

copyright by
LIEBHERR

Left steel plate

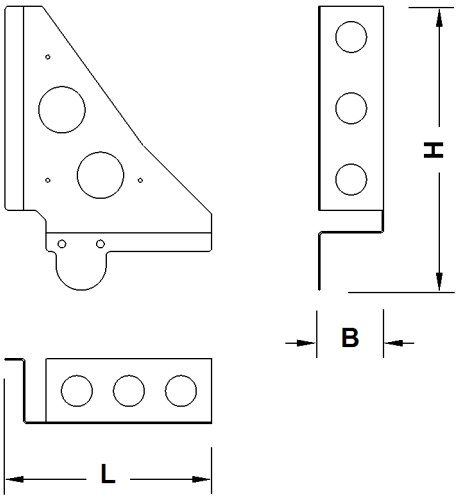

Fig. 134: Dimensions left steel plate

Name		Value
L	Length	537 mm 1‘ 9“ ft-in
B	Width	169 mm 6.65“ in
H	Height	737 mm 2‘ 5“ ft-in
Weight		20.5 kg 45.19 lb

Tab. 76: Technical data left steel plate

Right steel plate

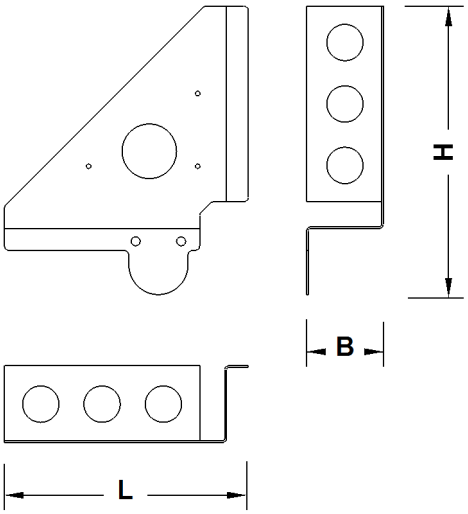

Fig. 135: Dimensions right steel plate

LWN/LR.x/V03.01//Auslieferung/2015-06-03/en

copyright by
LIEBHERR

Name		Value
L	Length	537 mm 1‘ 9“ ft-in
B	Width	169 mm 6.65“ in
H	Height	634 mm 2‘ 1“ ft-in
Weight		18.5 kg 40.78 lb

Tab. 77: Technical data right steel plate

1.7.12 Carbody counterweight

Carbody counterweight for undercarriage with fixed track width

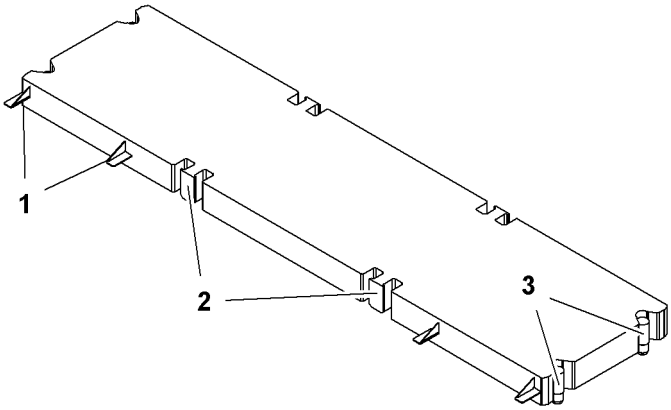

Fig. 136: Carbody counterweight for undercarriage with fixed track width

1 Support (4x) for platforms
2 Rigging point (4x)
3 Locking device (4x)

Carbody counterweight slab 14.3 t (31,526 lb)

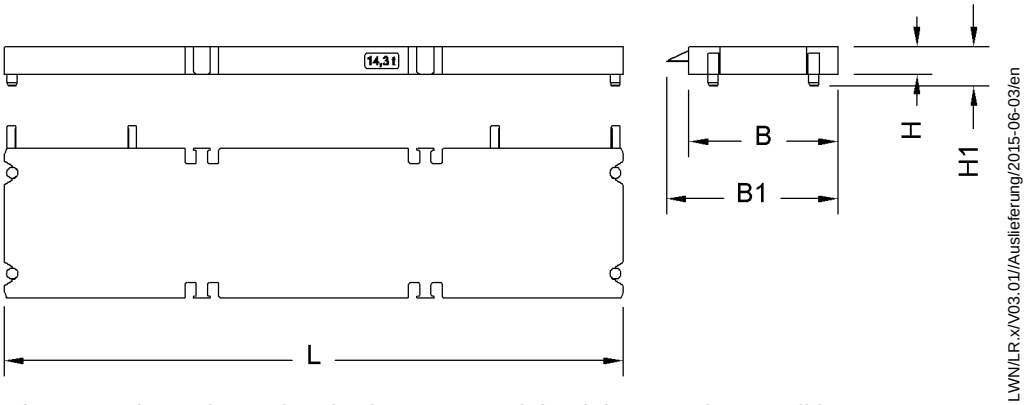

Fig. 137: Dimensions of carbody counterweight slab 14.3 t (31,526 lb)

Name		Value
L	Length	5540 mm 18‘ 2“ ft-in
W	Width	1335 mm 4‘ 5“ ft-in
W1	Width incl. platform supports	1535 mm 5‘ ft-in
H	Height	250 mm 9.84“ in
H1	Height incl. locking devices	350 mm 1‘ 2“ ft-in
Weight		14300 kg 31,526 lb

Tab. 78: Technical data carbody counterweight slab 14.3 t (31,526 lb)

Carbody counterweight slab 13.4 t (29,542 lb)*

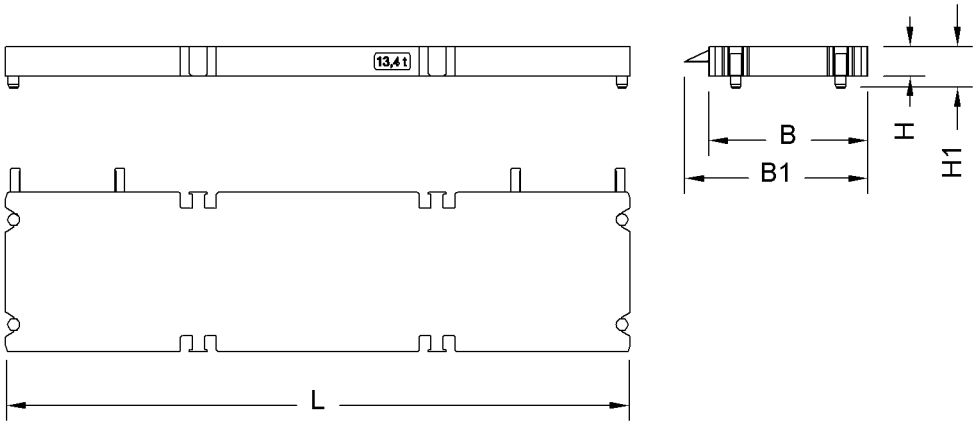

Fig. 138: Dimensions carbody counterweight slab 13.4 t (29,542 lb)

Name		Value
L	Length	5240 mm 17‘ 2“ ft-in
B	Width	1335 mm 4‘ 5“ ft-in
B1	Width incl. platform supports	1535 mm 5‘ ft-in
H	Height	250 mm 9.84“ in
H1	Height incl. locking devices	350 mm 1‘ 2“ ft-in
Weight		13400 kg 29,542 lb

Tab. 79: Technical data carbody counterweight slab 13.4 t (29,542 lb)

LWN/LR.x/V03.01//Auslieferung/2015-06-03/en

copyright by
LIEBHERR

Carbody counterweight for undercarriage* with adjustable track width

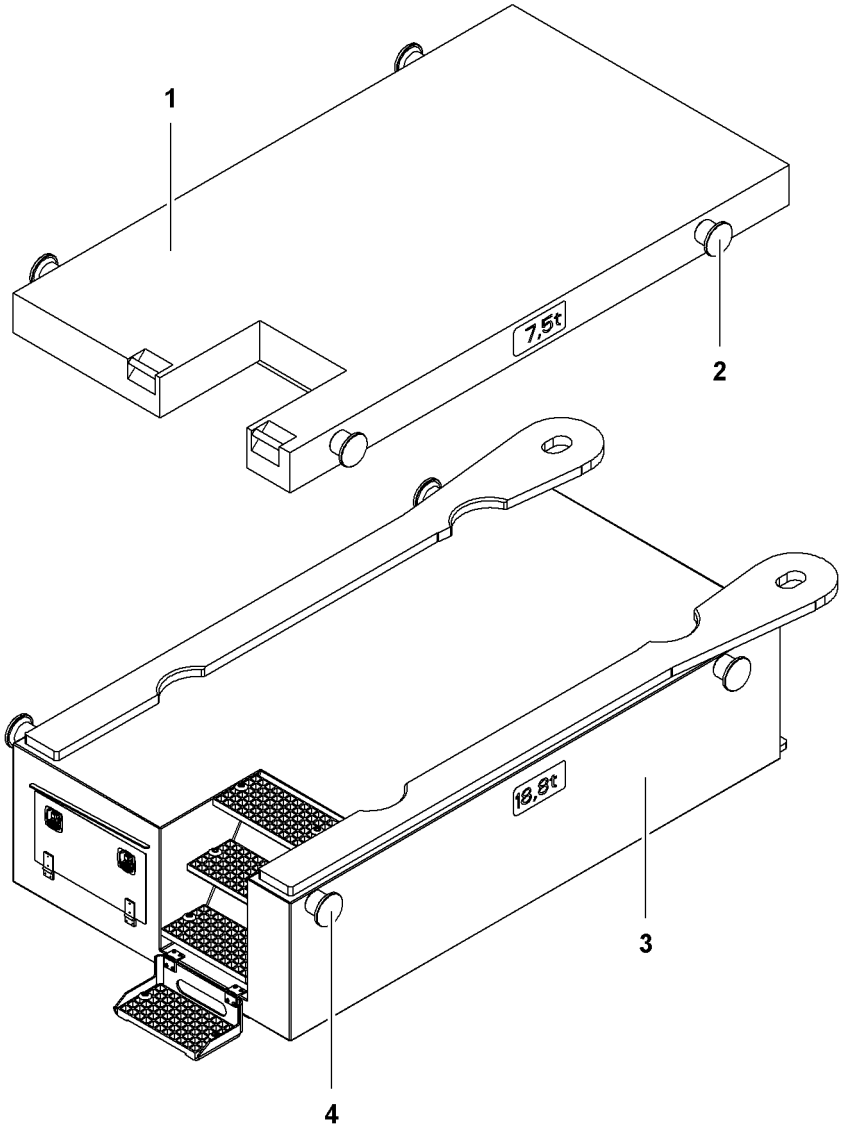

Fig. 139: Carbody counterweight for undercarriage with adjustable track width*

1	Carbody counterweight slab 7.5 t (16,534 lb)	**3**	Carbody counterweight slab 18.8 t (41,446 lb)
2	Rigging point (4x)	**4**	Rigging point (4x)

LWN/LR.x/V03.01//Auslieferung/2015-06-03/en

copyright by
LIEBHERR

Carbody counterweight slab 18.8 t (41,446 lb)

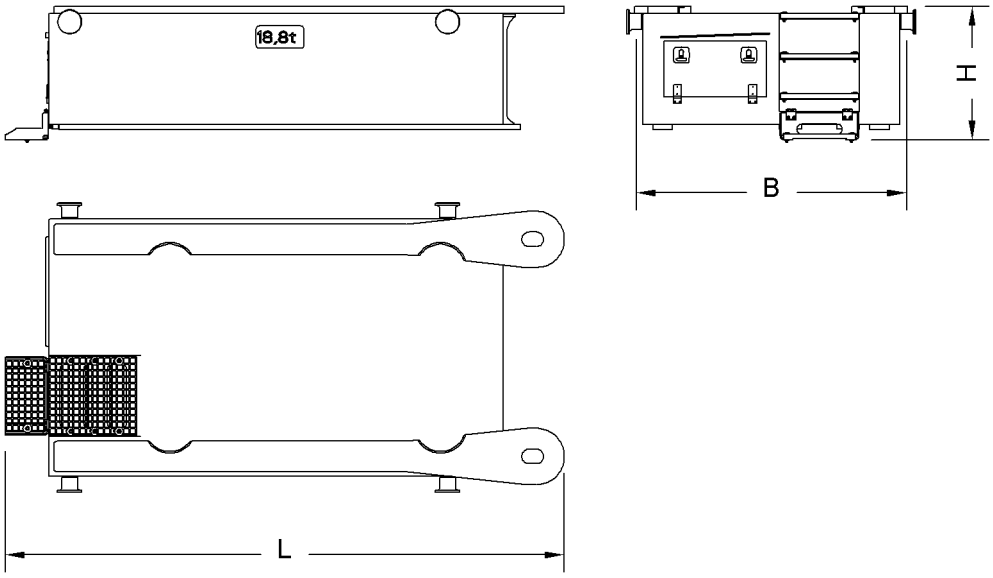

Fig. 140: Dimensions carbody counterweight slab 18.8 t (41,446 lb)

Name		Value
L	Length	3484 mm 11‘ 5“ ft-in
B	Width	1700 mm 5‘ 7“ ft-in
H	Height	833 mm 2‘ 9“ ft-in
Weight		18800 kg 41,446 lb

Tab. 80: Technical data carbody counterweight slab 18.8 t (41,446 lb)

LWN/LR.x/V03.01//Auslieferung/2015-06-03/en

copyright by
LIEBHERR

Carbody counterweight slab 7.5 t (16,534 lb)

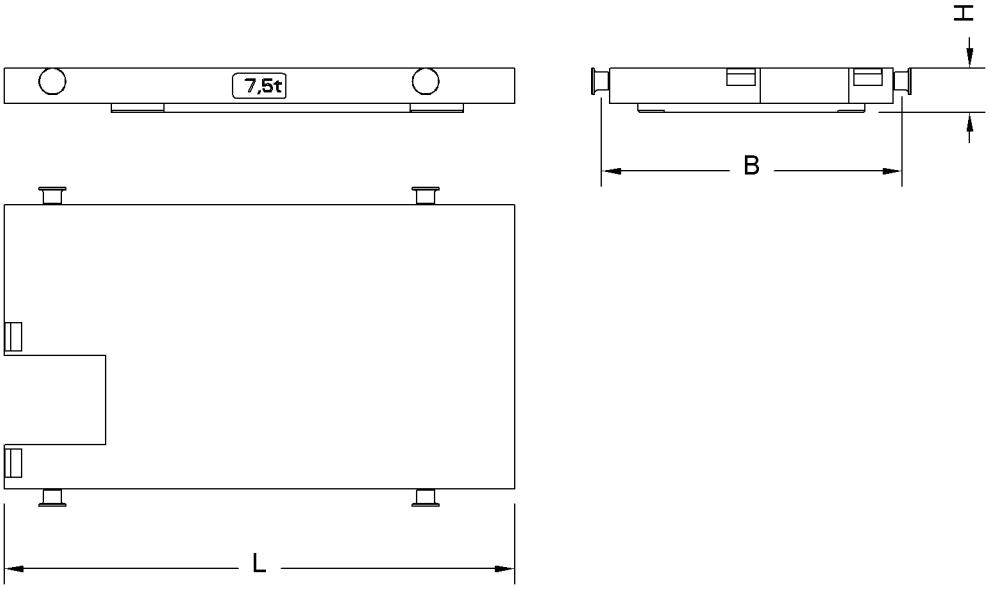

Fig. 141: Dimensions carbody counterweight slab 7.5 t (16,534 lb)

Name		Value
L	Length	2880 mm 9‘ 5“ ft-in
B	Width	1600 mm 5‘ 3“ ft-in
H	Height	200 mm 7.87“ in
Weight		7500 kg 16,534 lb

Tab. 81: Technical data carbody counterweight slab 7.5 t (16,534 lb)

LWN/LR.x/V03.01//Auslieferung/2015-06-03/en

copyright by
LIEBHERR

1.7.13 Rear counterweight

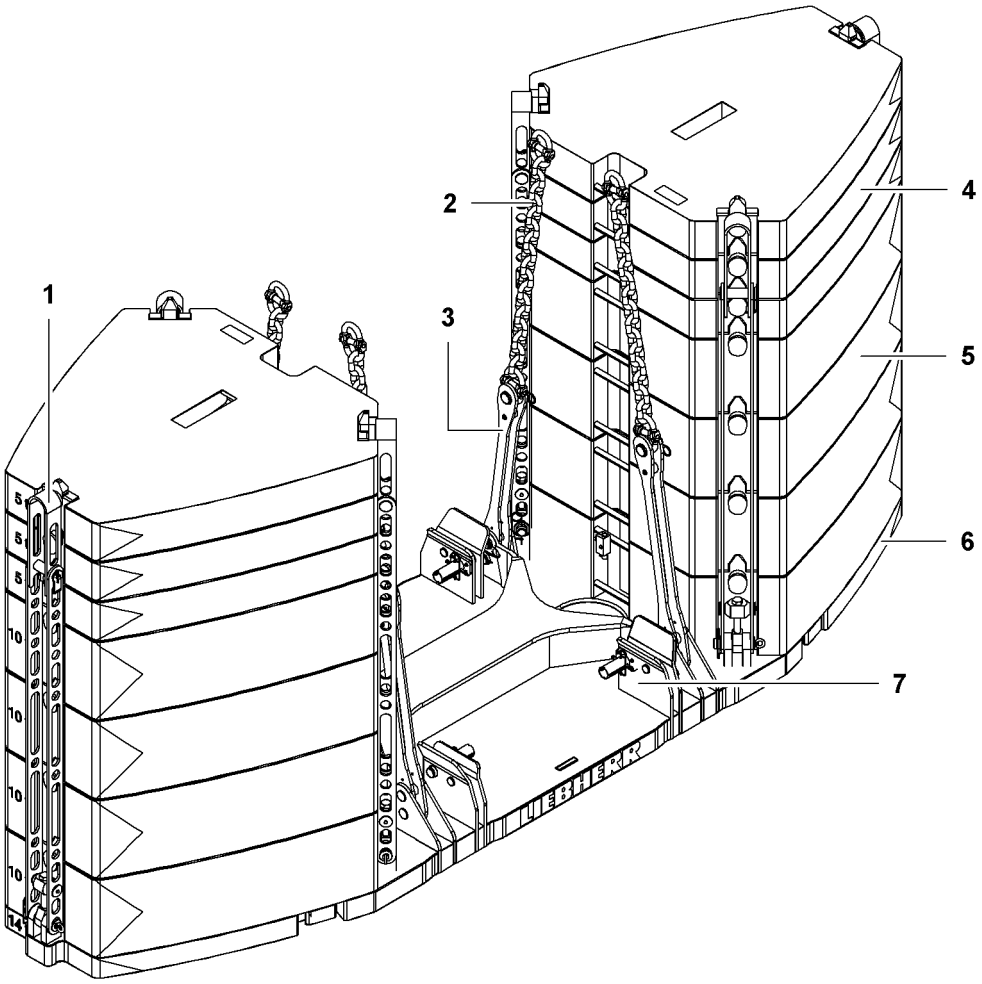

Fig. 142: Rear counterweight overview from rear left

1	Rear counterweight tie-down (6x)	**5**	Counterweight slab 10 t (22,046 lb) (max. 8x)
2	Counterweight hoisting chain (4x)	**6**	Basic counterweight slab 14 t (30,864 lb)
3	Slinging plate (4x)	**7**	Pin connection point (4x) with locking devices
4	Counterweight slab 5 t (11,023 lb) (max. 6x)		

The rear counterweight:
– is a basic requirement for stability.
– is lifted by the two counterweight hoisting cylinders.
– is pinned onto the rear of the uppercarriage.

LWN/LR.x/V03.01//Auslieferung/2015-06-03/en

copyright by
LIEBHERR

Basic counterweight slab 14 t (30,864 lb)

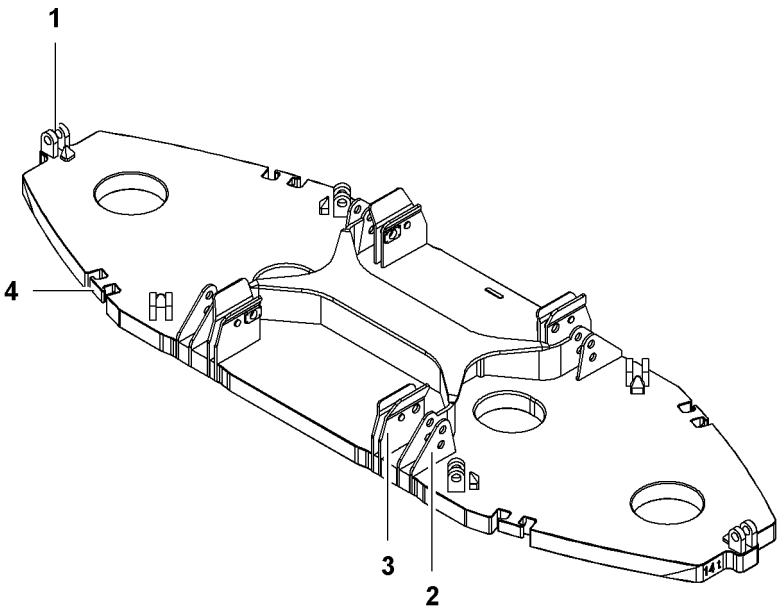

Fig. 143: Basic counterweight slab 14 t (30,864 lb)

1 Pin connection point counter-weight tie-down (6x)
2 Pin connection point slinging plates (4x)
3 Pin connection point (4x) with locking devices
4 Rigging point (4x)

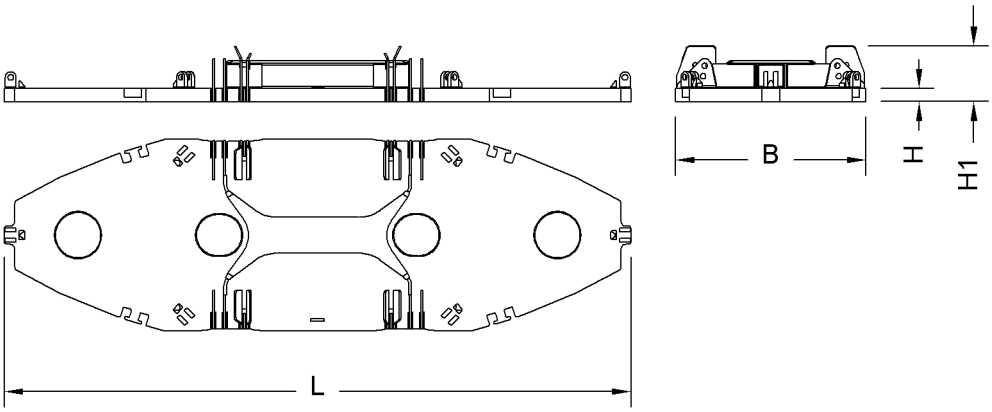

Fig. 144: Dimensions basic counterweight slab 14 t (30,864 lb)

Name		Value
L	Length incl. counterweight tie-down pin connection points	6930 mm 22‘ 9“ ft-in
W	Width	2106 mm 6‘ 11“ ft-in
H	Height	150 mm 5.91“ in
H1	Height incl. pin connection points and locking devices	615 mm 2‘ ft-in

LWN/LR.x/V03.01//Auslieferung/2015-06-03/en

copyright by
LIEBHERR

Name	Value
Weight	14000 kg 30,864 lb

Tab. 82: Technical data basic counterweight slab 14 t (30,864 lb)

Counterweight slab 10 t (22,046 lb)

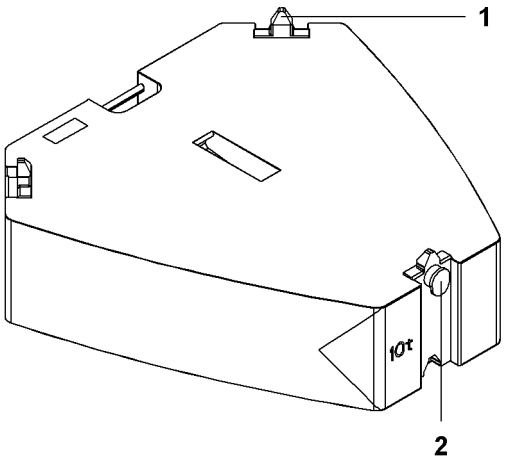

Fig. 145: Counterweight slab 10 t (22,046 lb)

1 Locking device (3x) **2** Rigging point (3x)

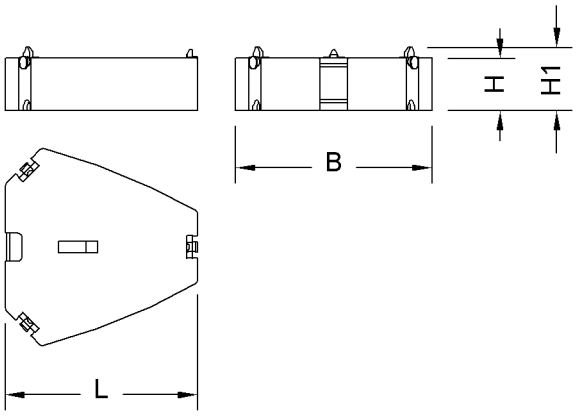

Fig. 146: Dimensions counterweight slab 10 t (22,046 lb)

Name		Value
L	Length	2050 mm 6‘ 9“ ft-in
B	Width	2117 mm 6‘ 11“ ft-in
H	Height	560 mm 1‘ 10“ ft-in
H1	Height incl. locking devices	680 mm 2‘ 3“ ft-in

LWN/LR.x/V03.01//Auslieferung/2015-06-03/en

copyright by
LIEBHERR

Name	Value
Weight	10000 kg 22,046 lb

Tab. 83: Technical data counterweight slab 10 t (22,046 lb)

Counterweight slab 5 t (11,023 lb)

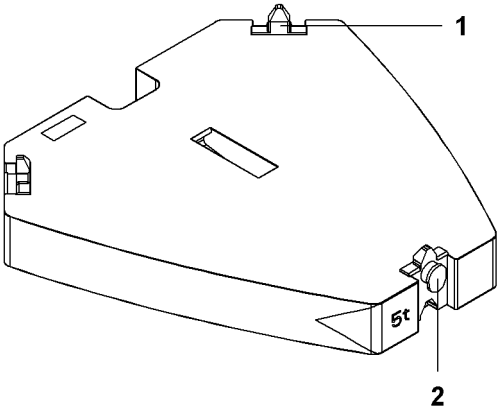

Fig. 147: Counterweight slab 5 t (11,023 lb)

1 Locking device (3x) **2** Rigging point (3x)

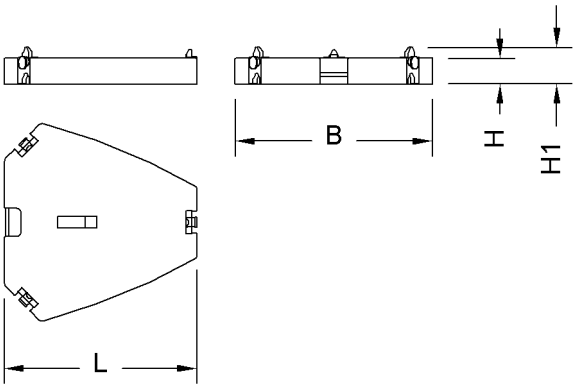

Fig. 148: Dimensions counterweight slab 5 t (11,023 lb)

Name		Value
L	Length	2050 mm 6‘ 9“ ft-in
B	Width	2117 mm 6‘ 11“ ft-in
H	Height	275 mm 10.83“ in
H1	Height incl. locking devices	395 mm 1‘ 4“ ft-in
Weight		5000 kg 11,023 lb

Tab. 84: Technical data counterweight slab 5 t (11,023 lb)

LWN/LR.x/V03.01//Auslieferung/2015-06-03/en

copyright by
LIEBHERR

1.8 Information about boom designation

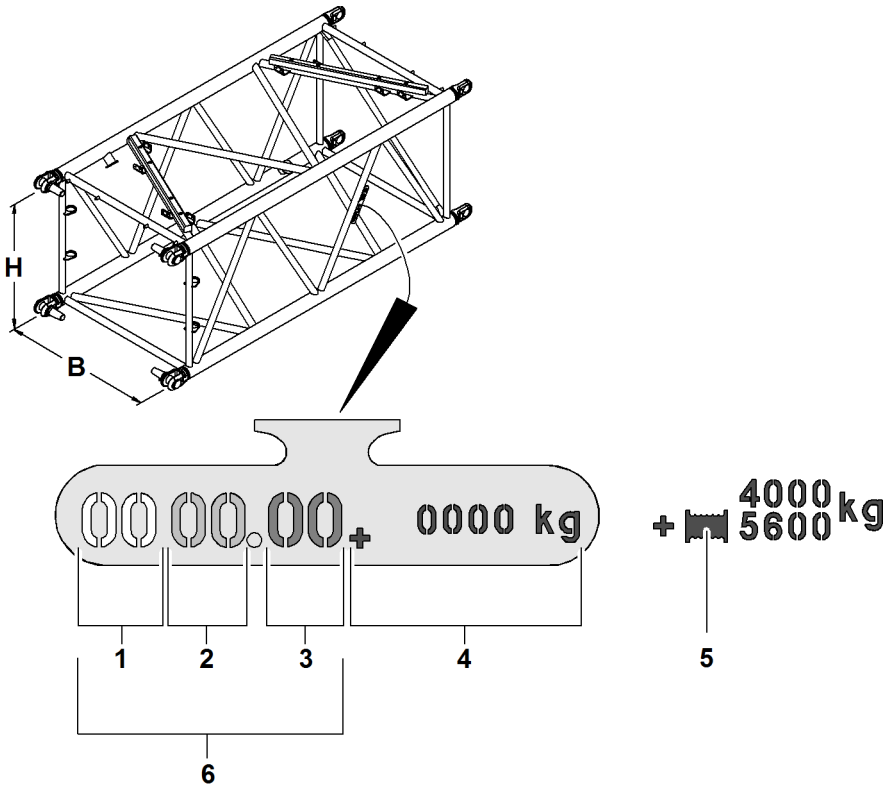

Fig. 149: Boom identification plate symbolic

1	System width of the part in [dm]	**5**	Weight of the part with and without jib luffing winch
2	System height of the part in [dm]	**6**	System number
3	Wall thickness code	**B**	System width
4	Weight of the part	**H**	System height

The **system number 6** marks boom components. The system number is used to distinguish between the different boom sections in the LR series.

Each boom section is marked with the system number.

The **system width B** indicates the width of the boom section.

The **system height H** refers to the height of the boom section.

The **wall thickness code 3** corresponds to a specific wall thickness.

LWN/LR.x/V03.01//Auslieferung/2015-06-03/en

copyright by
LIEBHERR

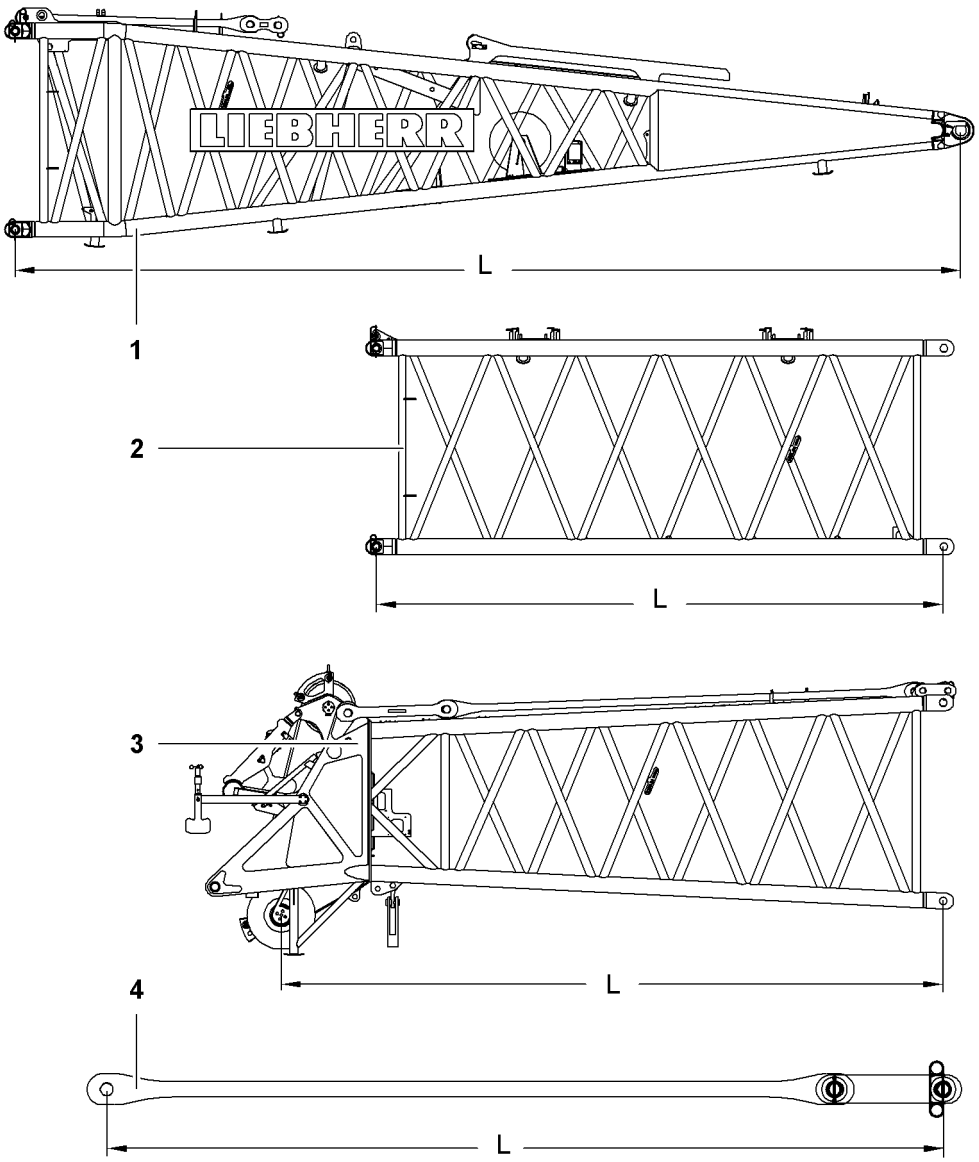

Fig. 150: System length of the boom sections

1	boom base section	**4**	Pendant strap (including connecting link)
2	Boom section	**L**	System length
3	Boom head		

The **system length L**:
– refers to the pin connection points for the boom sections or pendant straps
– is used to calculate the total length of the boom

LWN/LR.x/V03.01//Auslieferung/2015-06-03/en

1.9 Distinguishing features main boom sections LR 1300 and LR 1300 SX

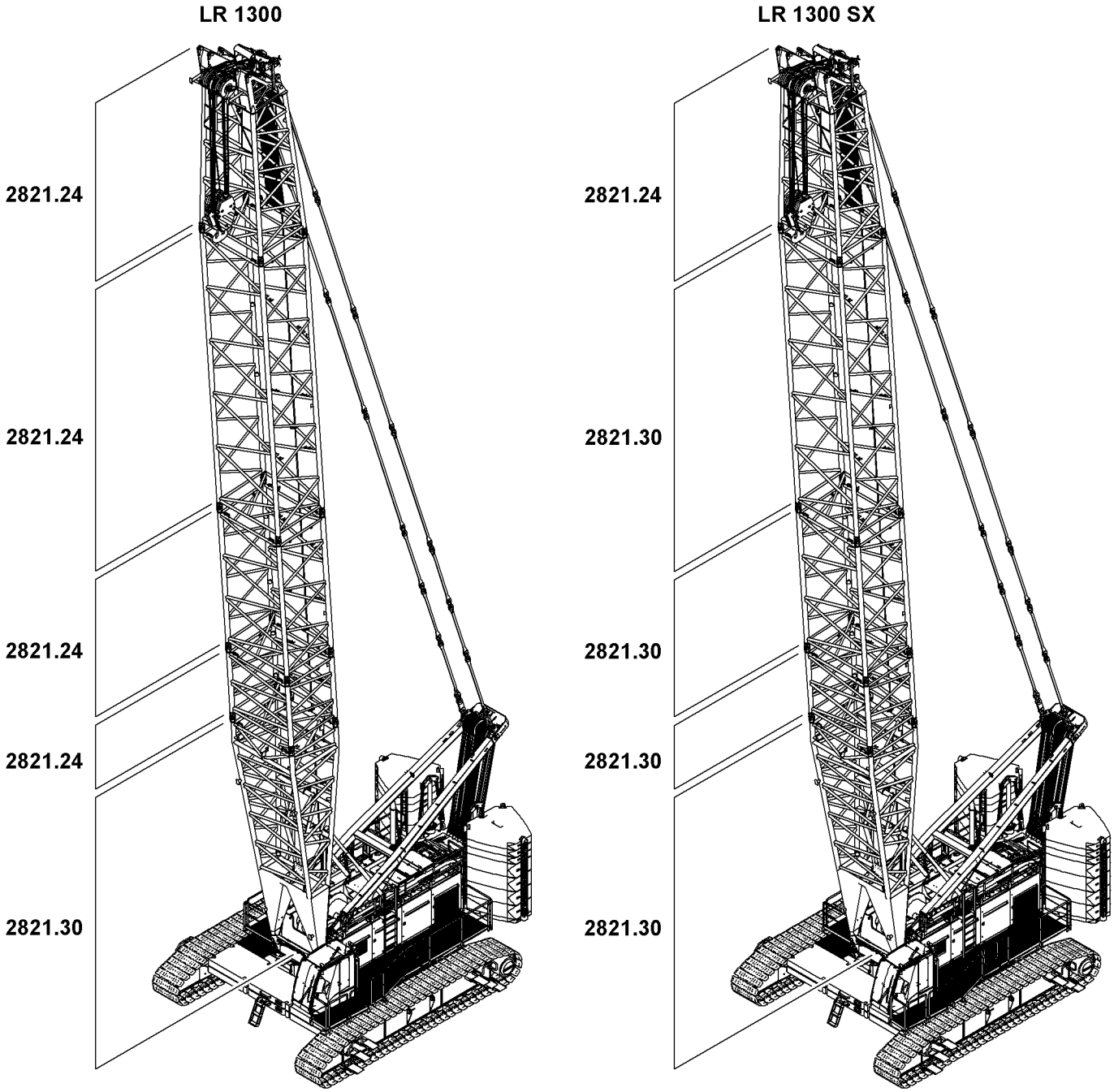

Fig. 151: Distinguishing features main boom sections LR 1300 and LR 1300 SX

The main boom sections differ with respect to wall thickness code and weight.

LWN/LR.x/V03.01//Auslieferung/2015-06-03/en

copyright by
LIEBHERR

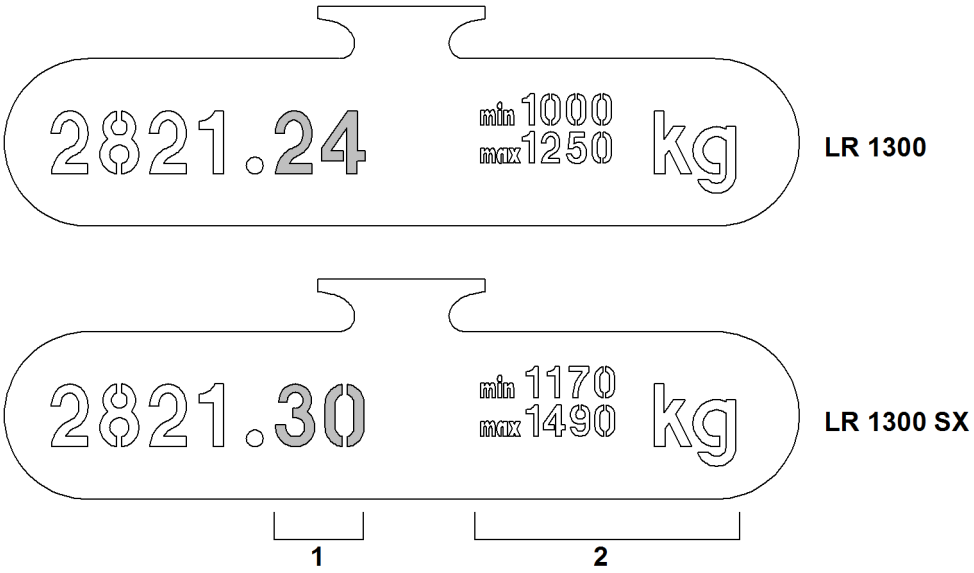

Fig. 152: Type plates of main boom sections LR 1300 and LR 1300 SX

1 Wall thickness code **2** Weight

LWN/LR.x/V03.01//Auslieferung/2015-06-03/en

1.10 Main boom - overview

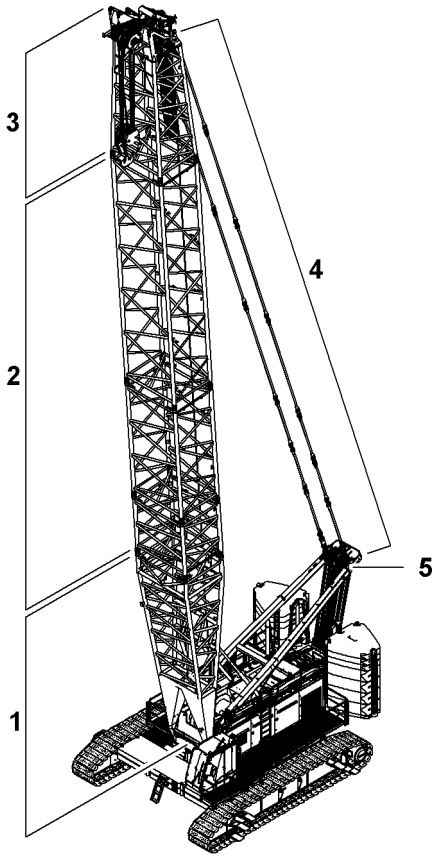

Fig. 153: Main boom - overview

1	Main boom base section	**4**	Main boom pendant straps
2	Main boom sections	**5**	A-frame1
3	Main boom head		

The main boom is composed of:
- Boom base section **1**
- Boom sections (3 m (10 ft), 6 m (20 ft), 12 m (40 ft)) **2**
- Boom head section **3**

The main boom pendant straps **4** connect A-frame 1 **5** to the boom head section **3**.

LWN/LR.x/V03.01//Auslieferung/2015-06-03/en

copyright by
LIEBHERR

1.11 2821 main boom

1.11.1 Main boom base section 2821.30

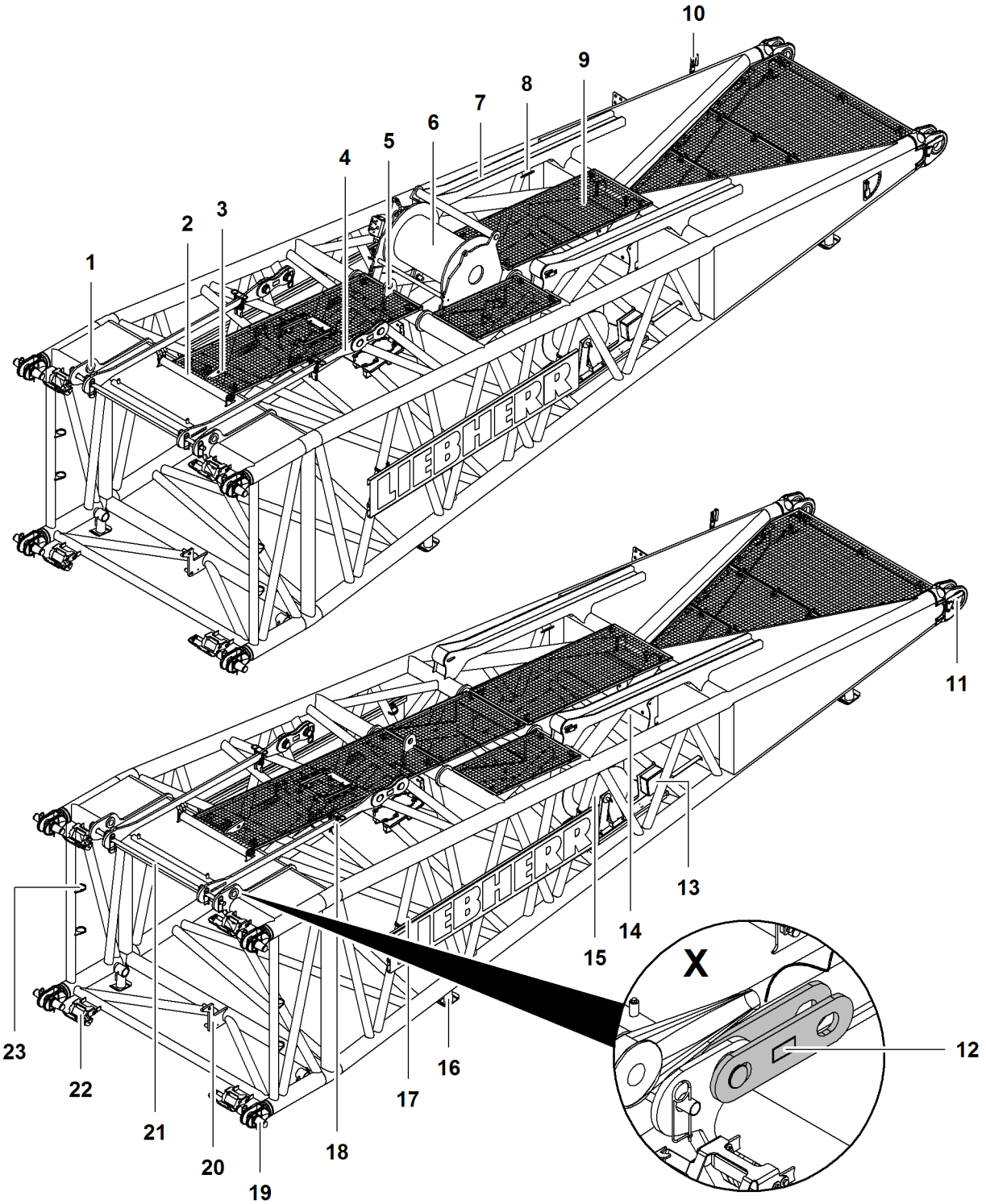

LWN/LR.x/V03.01//Auslieferung/2015-06-03/en

Fig. 154: Main boom base section 2821.30

copyright by
LIEBHERR

1 Pivot point (2x) for jib back-stay straps
2 Rope protection roller
3 Rope pulley for rope reeving winch
4 Transport position (2x) of main boom pendant straps
5 Pin connection point for assembly cylinder
6 Jib luffing winch
7 Guide rail (2x) for main boom tilting-back supports
8 Rigging point (4x)
9 Platform (4x)
10 Limit switch plate for main boom limit switch, top angle limiter
11 Pivot point (2x) on uppercar-riage
12 Connecting link (350 mm (1‘ 2“ ft-in)) (2x) for CF pendant straps
13 Rope reeving winch
14 Terminal box
15 Cable drum
16 Foot (6x, two of which hinged)
17 Boom identification plate
18 Transport bracket (2x) for main boom pendant straps
19 Pin connection point (4x) with double-taper pins (4x)
20 Rope pulley (2x) for rope of rope reeving winch
21 Transport bracket for main boom pendant straps
22 Catch (4x) for double-taper pins
23 Transport bracket (4x) for double-taper pins

Detail **X** shows the connecting links (350 mm (1‘ 2“ ft-in)) **12** installed on the machine with CF pendant straps on the main boom base section by the factory. The connecting links (350 mm (1‘ 2“ ft-in)) **12** are part of the jib backstay straps.

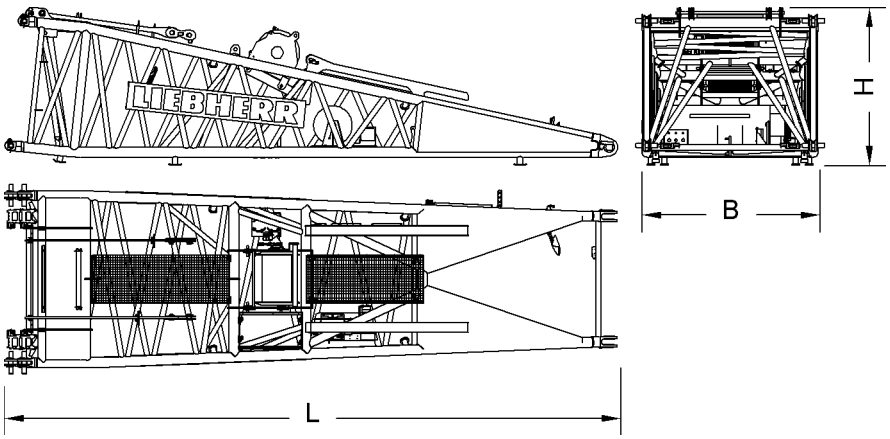

Fig. 155: Dimensions main boom base section 2821.30

Name		Value
System length		10000 mm 32‘ 10“ ft-in
System width		2800 mm 9‘ 2“ ft-in
System height		2100 mm 6‘ 11“ ft-in
L	Length	10300 mm 33‘ 10“ ft-in
W	Width	2970 mm 9‘ 9“ ft-in
H	Height	2650 mm 8‘ 8“ ft-in

LWN/LR.x/V03.01//Auslieferung/2015-06-03/en

copyright by
LIEBHERR

Name	Value
Weight (incl. pendant straps, jib luffing winch and rope)	7400 kg 16,314 lb
Weight (incl. pendant straps, without jib luffing winch)	5700 kg 12,566 lb
Double-taper pins Ø	80 mm 3.15“ in

Tab. 85: Technical data main boom base section 2821.30

1.11.2 Main boom section 2821 3 m (10 ft)

Main boom section 2821.30 3 m (10 ft) for LR 1300 SX

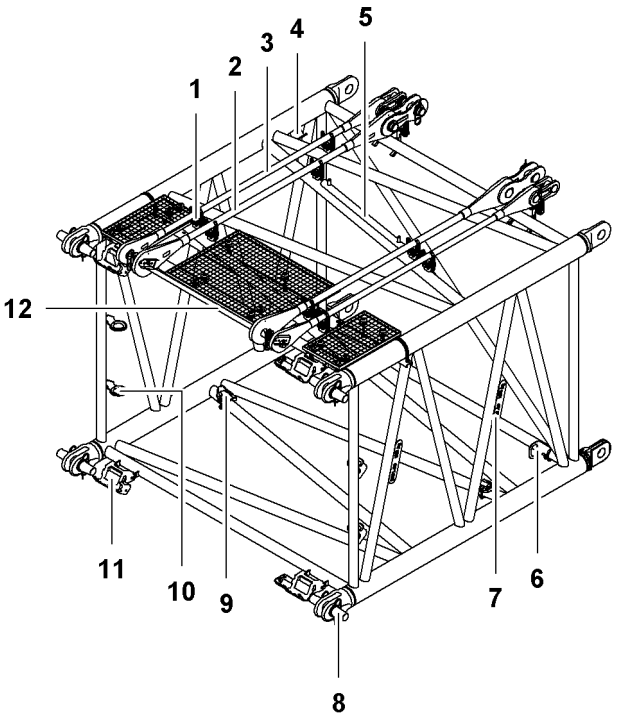

Fig. 156: Main boom section 2821.30 3 m (10 ft) for LR 1300 SX

1 Transport bracket (8x) for pendant straps
2 Transport position of main boom pendant straps 3 m (10 ft) (2x)
3 Transport position of jib backstay straps 3 m (10 ft) (2x)
4 Rigging point (4x)
5 Rope protection guard
6 Pin connection point (2x) for retracted jib section during transport
7 Boom identification plate (2x)
8 Pin connection point (8x) with double-taper pin (4x)
9 Support (4x) for retracted jib section during transport
10 Transport bracket (4x) for double taper pin
11 Catch (4x) for double-taper pins
12 Transport bracket for pendant straps

LWN/LR.x/V03.01/Auslieferung/2015-06-03/en

copyright by
LIEBHERR

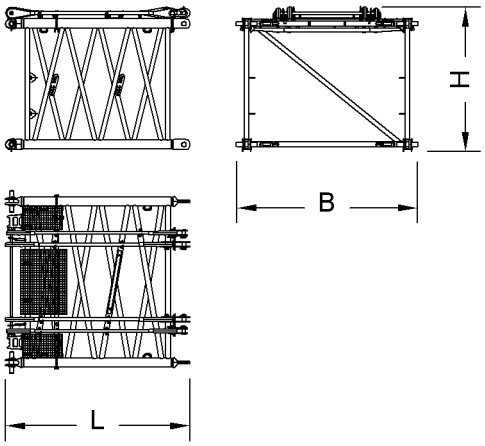

Fig. 157: Dimensions main boom section 2821.30 3 m (10 ft) for LR 1300 SX

Name		Value
System length		3000 mm 9‘ 10“ ft-in
System width		2800 mm 9‘ 2“ ft-in
System height		2100 mm 6‘ 11“ ft-in
L	Length	3220 mm 10‘ 7“ ft-in
B	Width	2970 mm 9‘ 9“ ft-in
H	Height (incl. pendant straps)	2420 mm 7‘ 11“ ft-in
Weight (incl. pendant straps)		1476 kg 3,254 lb
Double taper pin Ø		80 mm 3.15“ in

Tab. 86: Technical data main boom section 2821.30 3 m (10 ft) for LR 1300 SX

LWN/LR.x/V03.01//Auslieferung/2015-06-03/en

copyright by
LIEBHERR

Main boom section 2821.24 3 m (10 ft) for LR 1300

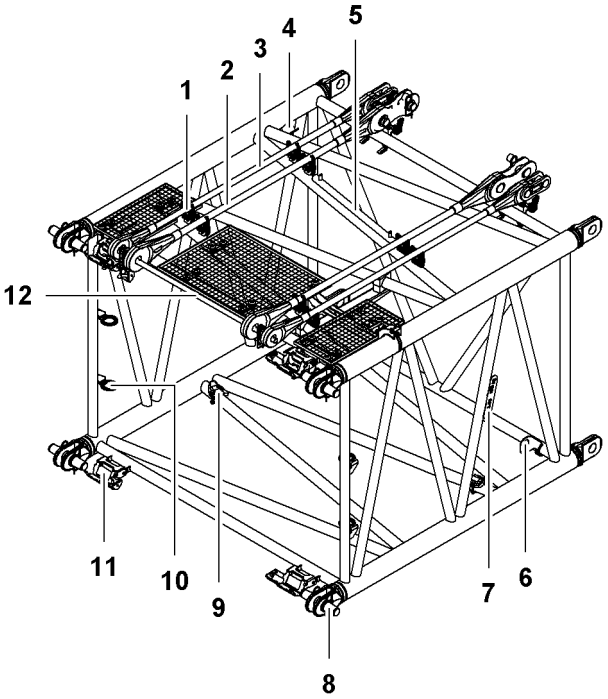

Fig. 158: Main boom section 2821.24 3 m (10 ft) for LR 1300

1 Transport bracket (8x) for pendant straps
2 Transport position of main boom pendant straps 3 m (10 ft) (2x)
3 Transport position of jib backstay straps 3 m (10 ft) (2x)
4 Rigging point (4x)
5 Rope protection guard
6 Pin connection point (2x) for retracted jib section during transport
7 Boom identification plate
8 Pin connection point (8x) with double-taper pin (4x)
9 Support (4x) for retracted jib section during transport
10 Transport bracket (4x) for double taper pin
11 Catch (4x) for double-taper pins
12 Transport bracket for pendant straps

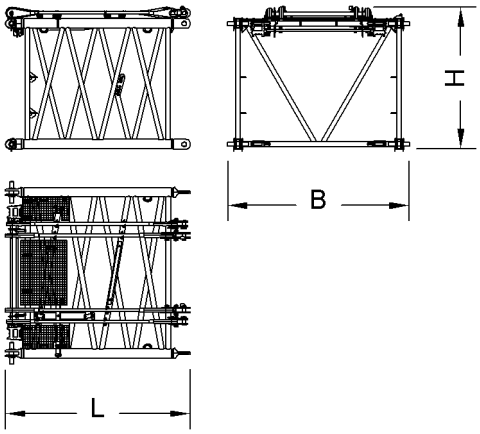

Fig. 159: Dimensions main boom section 2821.24 3 m (10 ft) for LR 1300

LWN/LR.x/V03.01//Auslieferung/2015-06-03/en

Name		Value
System length		3000 mm 9‘ 10“ ft-in
System width		2800 mm 9‘ 2“ ft-in
System height		2100 mm 6‘ 11“ ft-in
L	Length	3220 mm 10‘ 7“ ft-in
B	Width	2970 mm 9‘ 9“ ft-in
H	Height (incl. pendant straps)	2420 mm 7‘ 11“ ft-in
Weight (incl. pendant straps)		1284 kg 2,831 lb
Double taper pin Ø		80 mm 3.15“ in

Tab. 87: Technical data main boom section 2821.24 3 m (10 ft) for LR 1300

LWN/LR.x/V03.01//Auslieferung/2015-06-03/en

copyright by
LIEBHERR

1.11.3 Main boom section 2821 6 m (20 ft)

Main boom section 2821.30 6 m (20 ft) for LR 1300 SX

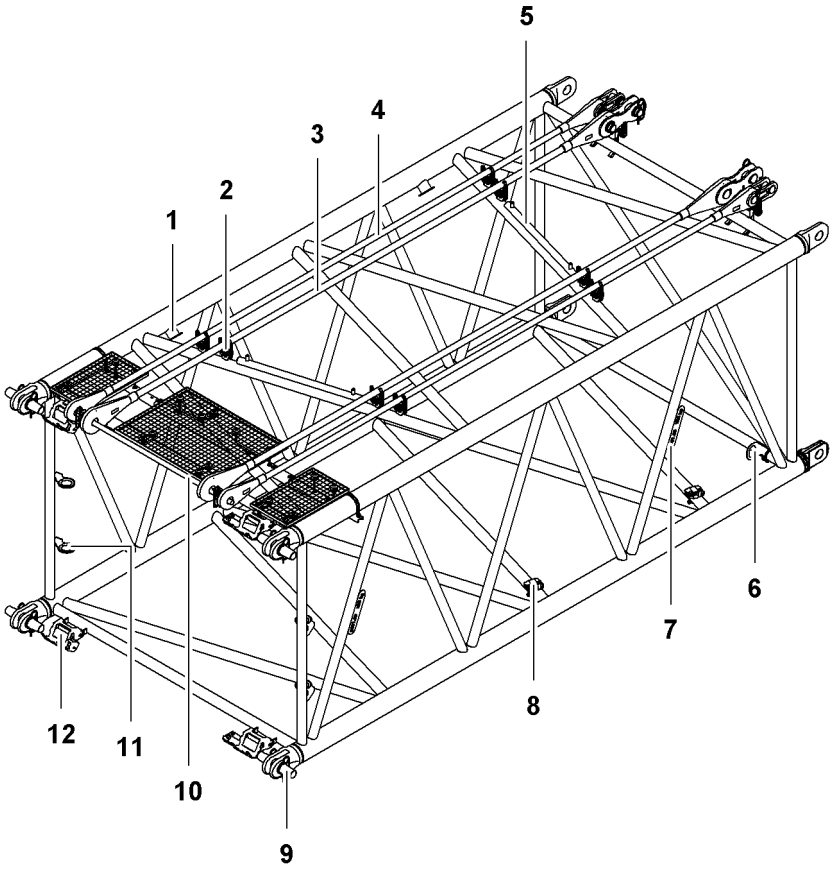

Fig. 160: Main boom section 2821.30 6 m (20 ft) for LR 1300 SX

1 Rigging point (4x)
2 Transport bracket (8x) for pendant straps
3 Transport position of main boom pendant straps 6 m (20 ft) (2x)
4 Transport position of jib backstay straps 6 m (20 ft) (2x)
5 Rope protection guard (2x)
6 Pin connection point (2x) for retracted jib section during transport
7 Boom identification plate (2x)
8 Support (4x) for retracted jib section during transport
9 Pin connection point (8x) with double-taper pin (4x)
10 Transport bracket for pendant straps
11 Transport bracket (4x) for double taper pin
12 Catch (4x) for double-taper pins

LWN/LR.x/V03.01//Auslieferung/2015-06-03/en

copyright by
LIEBHERR

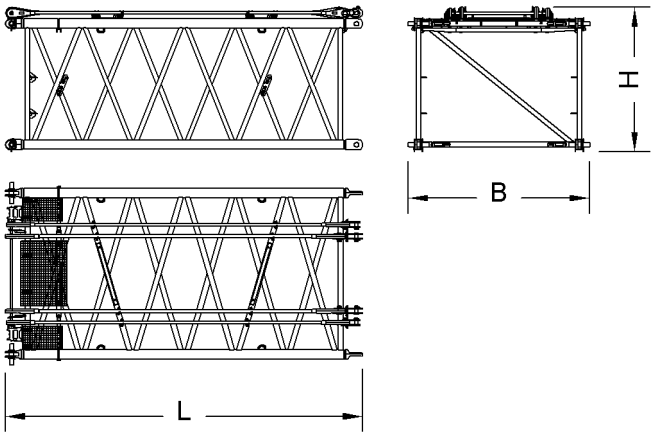

Fig. 161: Dimensions main boom section 2821.30 6 m (20 ft) for LR 1300 SX

Name		Value
System length		6000 mm 19‘ 8“ ft-in
System width		2800 mm 9‘ 2“ ft-in
System height		2100 mm 6‘ 11“ ft-in
L	Length	6220 mm 20‘ 5“ ft-in
B	Width	2970 mm 9‘ 9“ ft-in
H	Height (incl. pendant straps)	2420 mm 7‘ 11“ ft-in
Weight (incl. pendant straps)		2304 kg 5,079 lb
Double taper pin Ø		80 mm 3.15“ in

Tab. 88: Technical data main boom section 2821.30 6 m (20 ft) for LR 1300 SX

LWN/LR.x/V03.01//Auslieferung/2015-06-03/en

copyright by
LIEBHERR

Main boom section 2821.24 6 m (20 ft) for LR 1300

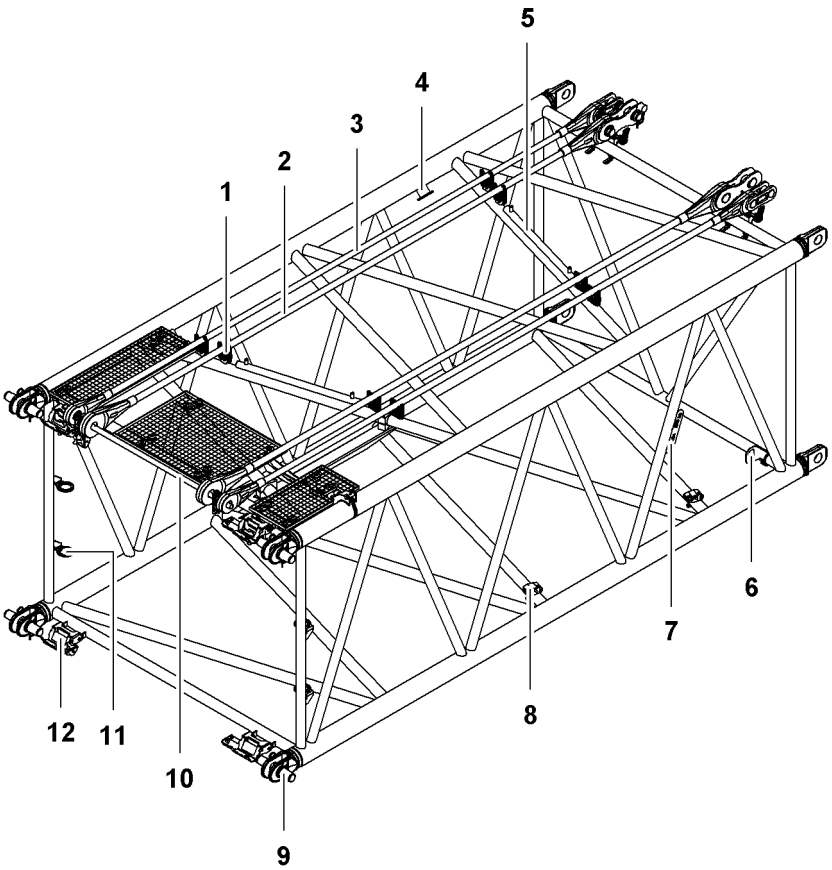

Fig. 162: Main boom section 2821.24 6 m (20 ft) for LR 1300

1	Transport bracket (8x) for pendant straps	**7**	Boom identification plate
2	Transport position of main boom pendant straps 6 m (20 ft) (2x)	**8**	Support (4x) for retracted jib section during transport
3	Transport position of jib backstay straps 6 m (20 ft) (2x)	**9**	Pin connection point (8x) with double-taper pin (4x)
4	Rigging point (4x)	**10**	Transport bracket for pendant straps
5	Rope protection guard (2x)	**11**	Transport bracket (4x) for double taper pin
6	Pin connection point (2x) for retracted jib section during transport	**12**	Catch (4x) for double-taper pins

LWN/LR.x/V03.01//Auslieferung/2015-06-03/en

copyright by
LIEBHERR

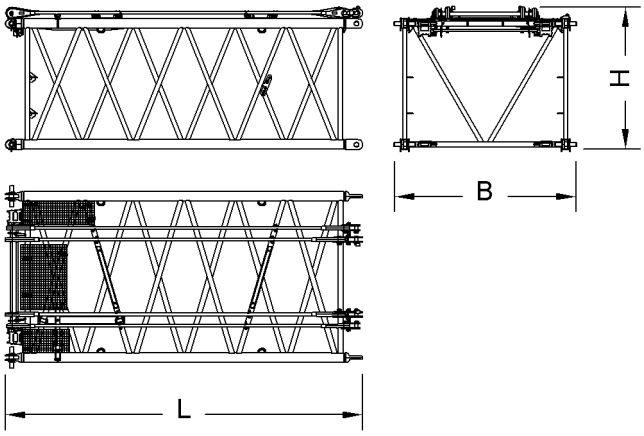

Fig. 163: Dimensions main boom section 2821.24 6 m (20 ft) for LR 1300

Name		Value
System length		6000 mm 19‘ 8“ ft-in
System width		2800 mm 9‘ 2“ ft-in
System height		2100 mm 6‘ 11“ ft-in
L	Length	6220 mm 20‘ 5“ ft-in
B	Width	2970 mm 9‘ 9“ ft-in
H	Height (incl. pendant straps)	2420 mm 7‘ 11“ ft-in
Weight (incl. pendant straps)		1977 kg 4,358 lb
Double taper pin Ø		80 mm 3.15“ in

Tab. 89: Technical data main boom section 2821.24 6 m (20 ft) for LR 1300

LWN/LR.x/V03.01//Auslieferung/2015-06-03/en

copyright by
LIEBHERR

1.11.4 Main boom section 2821 12 m (40 ft)

Main boom section 2821.30 12 m (40 ft) for LR 1300 SX

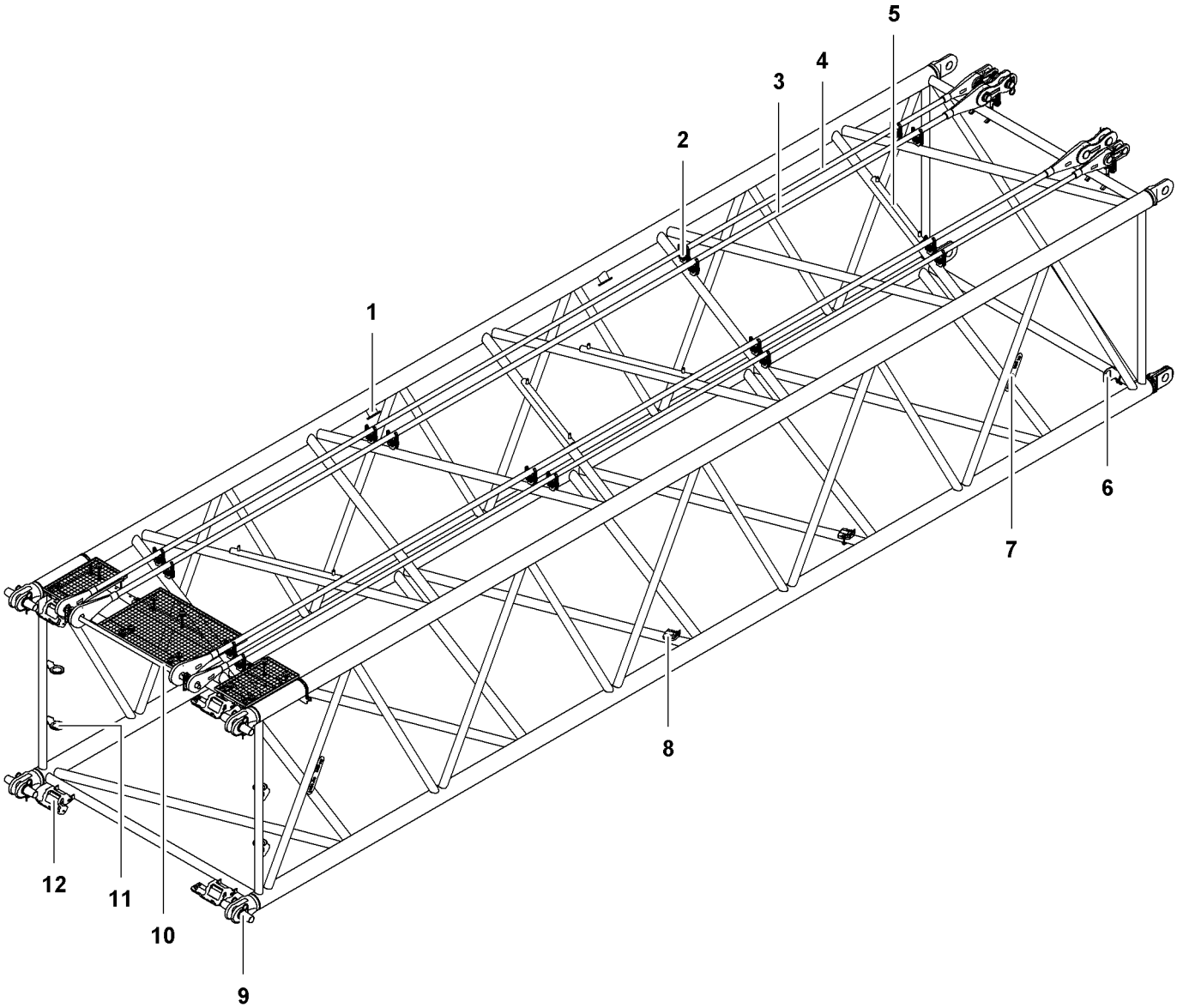

Fig. 164: Main boom section 2821.30 12 m (40 ft) for LR 1300 SX

1	Rigging point (4x)	**5**	Rope protection guard (3x)	**9**	Pin connection point (8x) with double-taper pin (4x)
2	Transport bracket (16x) for pendant straps	**6**	Pin connection point (2x) for retracted jib section during transport	**10**	Transport bracket for pendant straps
3	Transport position of main boom pendant straps 12 m (40 ft) (2x)	**7**	Boom identification plate (2x)	**11**	Transport bracket (4x) for double taper pin
4	Transport position of jib back-stay straps 12 m (40 ft) (2x)	**8**	Support (4x) for retracted jib section during transport	**12**	Catch (4x) for double-taper pins

LWN/LR.x/V03.01/Auslieferung/2015-06-03/en

copyright by
LIEBHERR

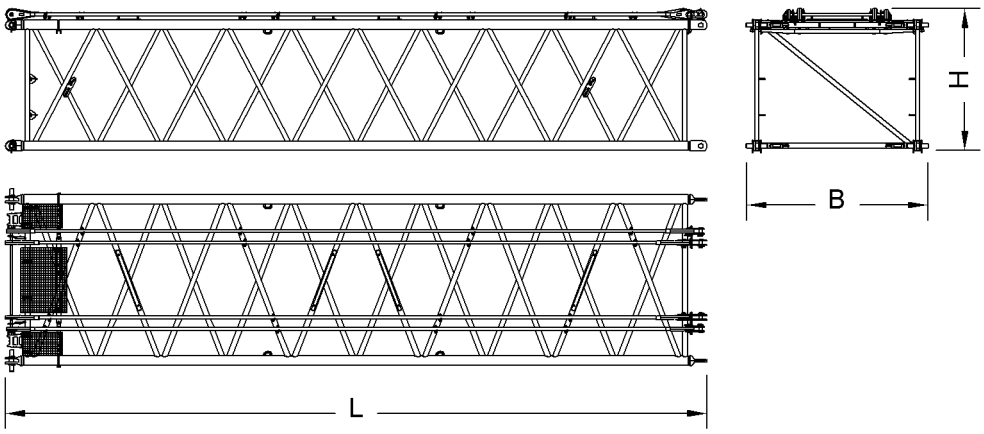

Fig. 165: Dimensions main boom section 2821.30 12 m (40 ft) for LR 1300 SX

Name		Value
System length		12000 mm 39‘ 4“ ft-in
System width		2800 mm 9‘ 2“ ft-in
System height		2100 mm 6‘ 11“ ft-in
L	Length	12220 mm 40‘ 1“ ft-in
B	Width	2970 mm 9‘ 9“ ft-in
H	Height (incl. pendant straps)	2420 mm 7‘ 11“ ft-in
Weight (incl. pendant straps)		4236 kg 9,339 lb
Double taper pin Ø		80 mm 3.15“ in

Tab. 90: Technical data main boom section 2821.30 12 m (40 ft) for LR 1300 SX

LWN/LR.x/V03.01//Auslieferung/2015-06-03/en

copyright by
LIEBHERR

Main boom section 2821.24 12 m (40 ft) for LR 1300

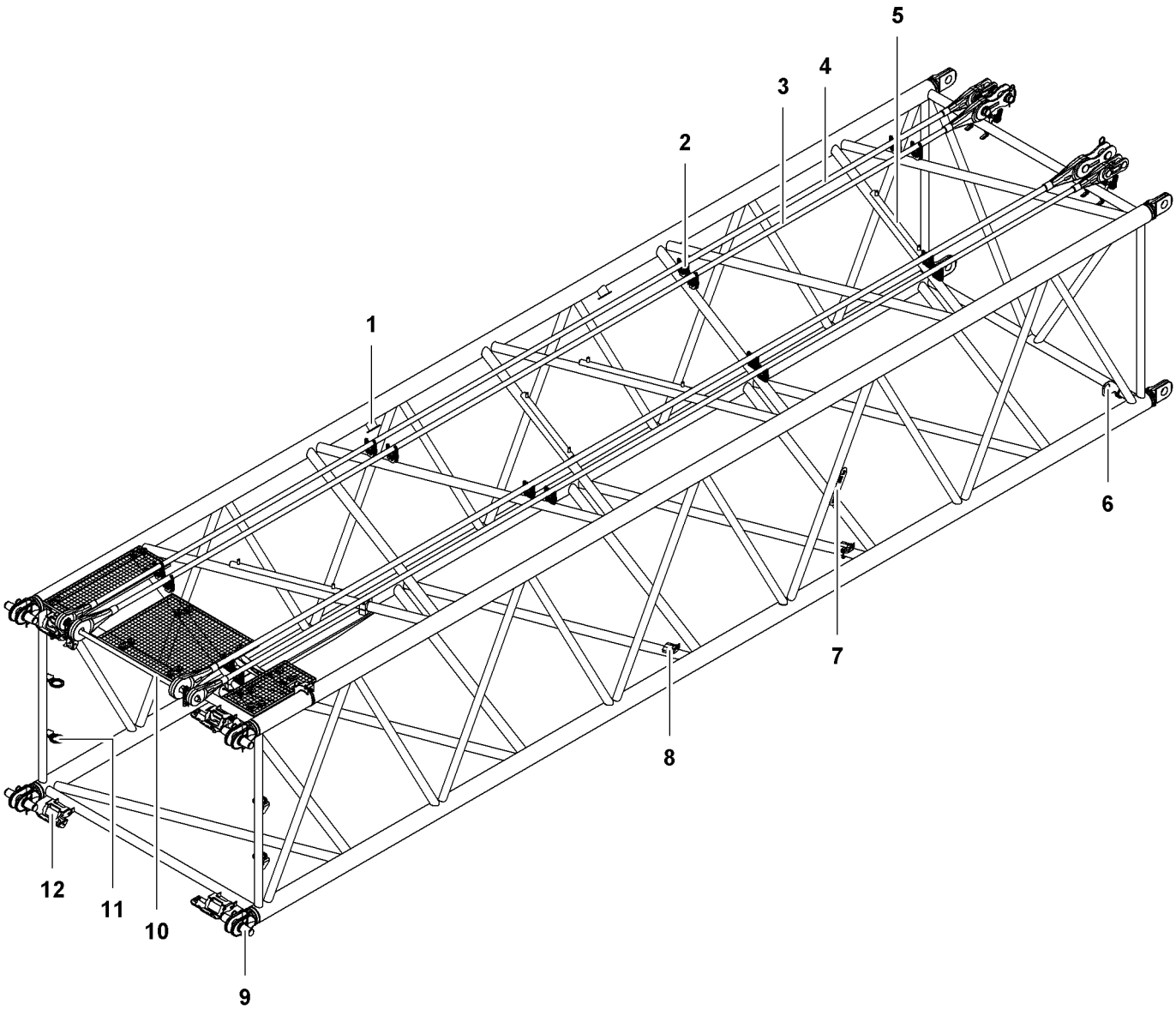

Fig. 166: Main boom section 2821.24 12 m (40 ft) for LR 1300

1	Rigging point (4x)	**5**	Rope protection guard (3x)	**9**	Pin connection point (8x) with double-taper pin (4x)
2	Transport bracket (16x) for pendant straps	**6**	Pin connection point (2x) for retracted jib section during transport	**10**	Transport bracket for pendant straps
3	Transport position of main boom pendant straps 12 m (40 ft) (2x)	**7**	Boom identification plate	**11**	Transport bracket (4x) for double taper pin
4	Transport position of jib back-stay straps 12 m (40 ft) (2x)	**8**	Support (4x) for retracted jib section during transport	**12**	Catch (4x) for double-taper pins

LWN/LR.x/V03.01/Auslieferung/2015-06-03/en

copyright by
LIEBHERR

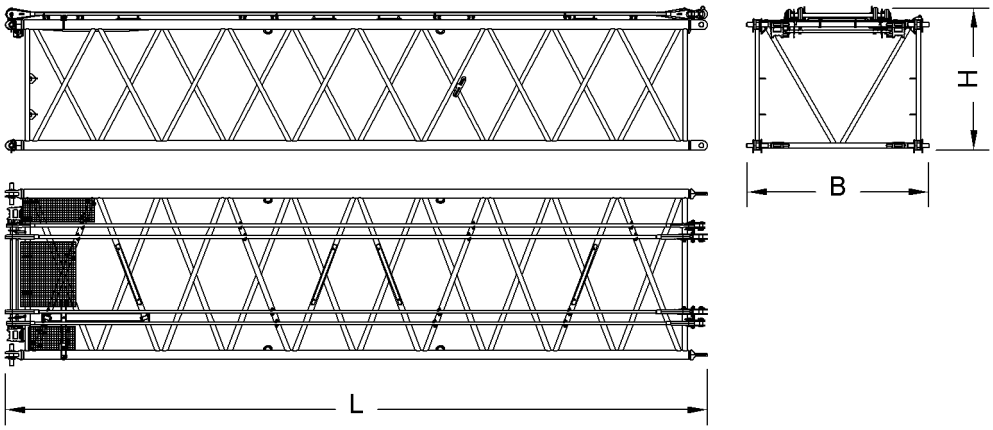

Fig. 167: Dimensions main boom section 2821.24 12 m (40 ft) for LR 1300

Name		Value
System length		12000 mm 39‘ 4“ ft-in
System width		2800 mm 9‘ 2“ ft-in
System height		2100 mm 6‘ 11“ ft-in
L	Length	12220 mm 40‘ 1“ ft-in
B	Width	2970 mm 9‘ 9“ ft-in
H	Height (incl. pendant straps)	2420 mm 7‘ 11“ ft-in
Weight (incl. pendant straps)		4091 kg 9,019 lb
Double taper pin Ø		80 mm 3.15“ in

Tab. 91: Technical data main boom section 2821.24 12 m (40 ft) for LR 1300

LWN/LR.x/V03.01//Auslieferung/2015-06-03/en

copyright by
LIEBHERR

1.11.5 Main boom head section 2821.24

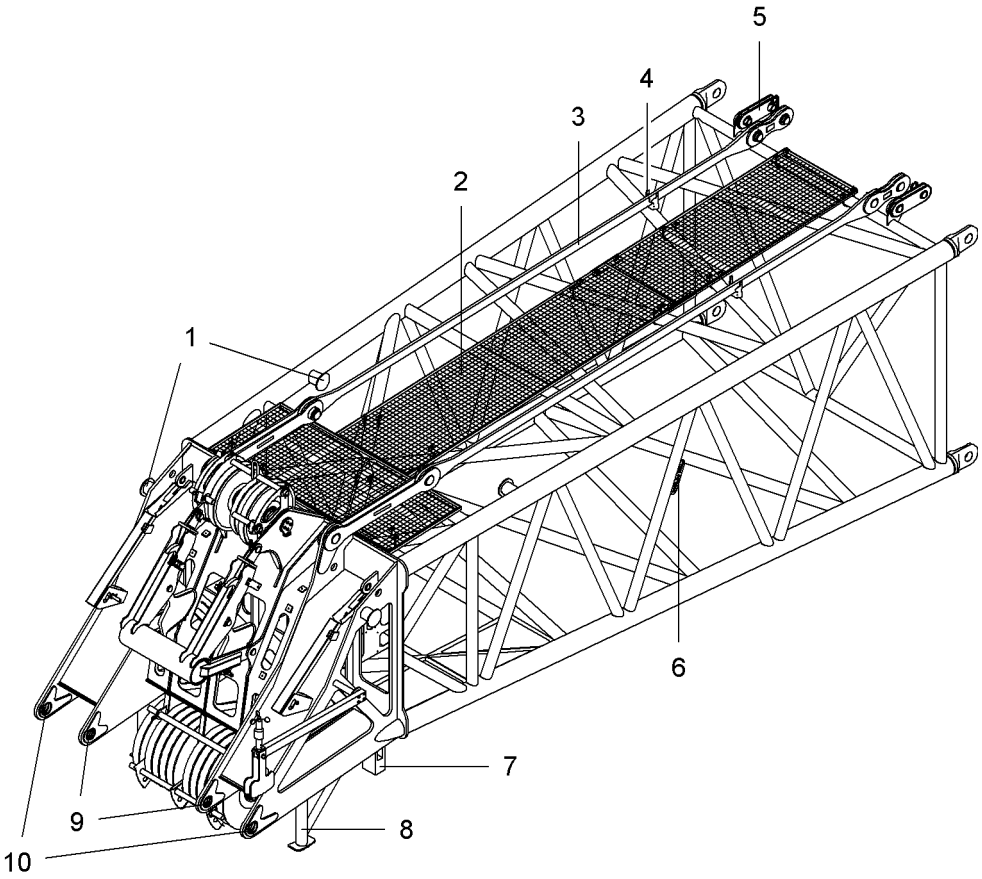

Fig. 168: Main boom head section 2821.24

1	Lifting point (4x)	**6**	Boom identification plate
2	Platform (3x)	**7**	Rope fixation
3	Transport position of main boom pendant straps (2x)	**8**	Base (2x)
4	Transport fixation (2x) for pendant straps	**9**	Pin connection point (2x) for jib or auxiliary jib
5	Connecting link (2x) for jib back-stay straps (if jib not attached)	**10**	Pin connection point (2x) for jib

The jib backstay straps that are not required are pinned to the connecting links **5** if no jib has been attached and the jib backstay straps remain on the main boom. Observe the guidelines regarding the location of the jib backstay straps on the main boom as outlined in the foreword to the load chart.

LWN/LR.x/V03.01//Auslieferung/2015-06-03/en

copyright by
LIEBHERR

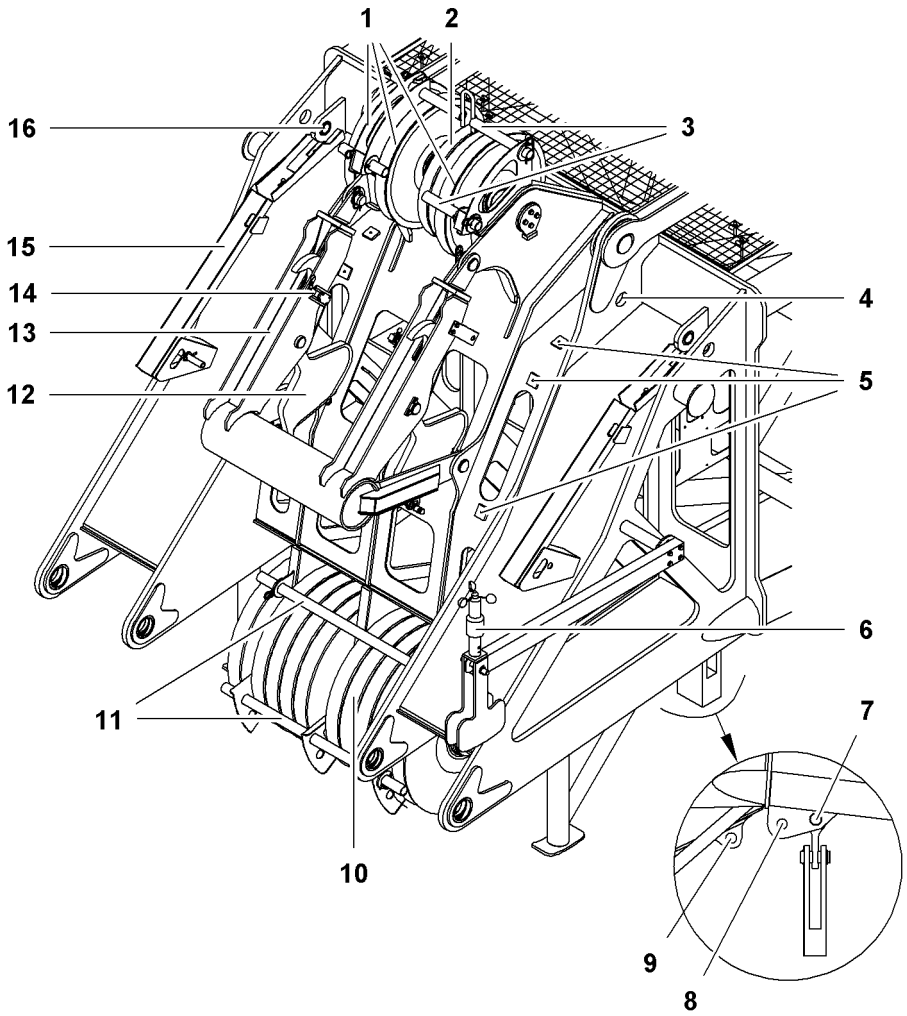

Fig. 169: Main boom head section 2821.24 detail

1	Gantry pulley (3x) for rope of winch 1/winch 2	**9**	Pivot point (2x) for the rope fixing point at low reevings
2	Small gantry pulley for rope of luffing jib luffing winch	**10**	Pulley (10x)
3	Rope protection pipe (3x)	**11**	Rope protection pipe (2x)
4	Pin connection point (2x) for hydraulic tilting-back supports of 1916 luffing jib	**12**	Locking flabs (2x) for rigid jib tilting-back supports
5	Fastening point (8x) of guide rails for hydraulic tilting-back supports of the 1916 luffing jib	**13**	Guide rail (2x) for rigid jib tilting-back supports
6	Anemometer	**14**	Upper jib limit switch (2x)
7	Pivot point (2x) for rope fixing point	**15**	Guide rail (2x) for hydraulic tilting-back supports of 2316 luffing jib
8	Pivot point (2x) for jib head member	**16**	Pin connection point (2x) for hydraulic tilting-back supports of 2316 luffing jib

NOTICE
Inadmissible reeving of the rope of winch1/winch2 via small gantry pulley!
Damage to small gantry pulley.

▶ Only guide rope of the luffing jib luffing winch across small gantry pulley **2**.

LWN/LR.x/V03.01//Auslieferung/2015-06-03/en

copyright by
LIEBHERR

For 21-fold and 22-fold reeving, an additional pulley (11th pulley) has to be fit to the 2821.24 boom head section.

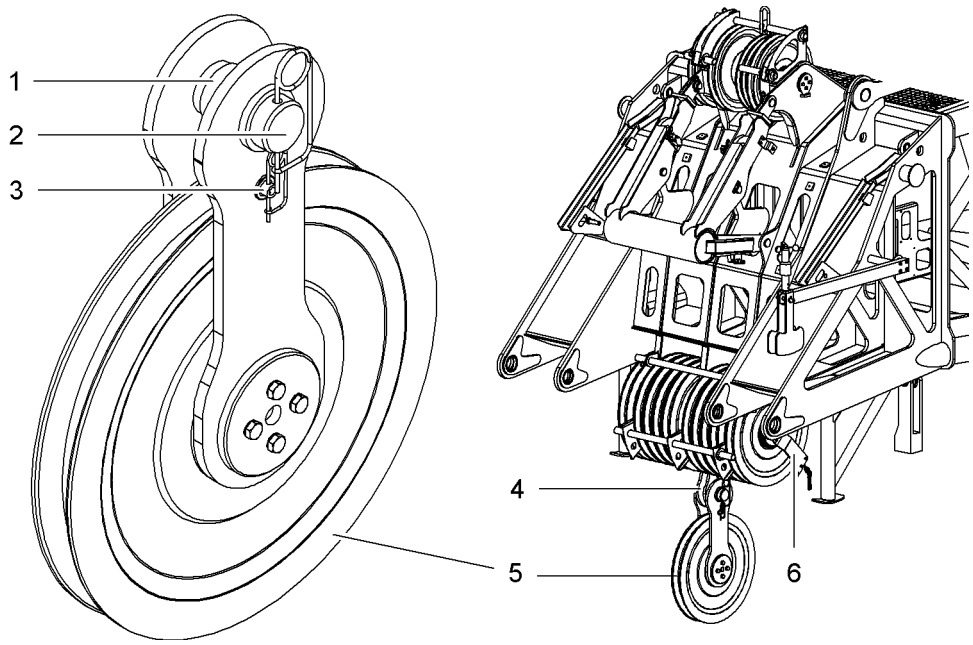

Fig. 170: 11th pulley for 21-fold and 22-fold reeving

1	Spacer (width = 45 mm (1.77“ in))	**4**	Bracket (2x) on main boom head section
2	Pin with washer and safety pin	**5**	11th pulley
3	Rope protection pipe	**6**	Hoist limit switch

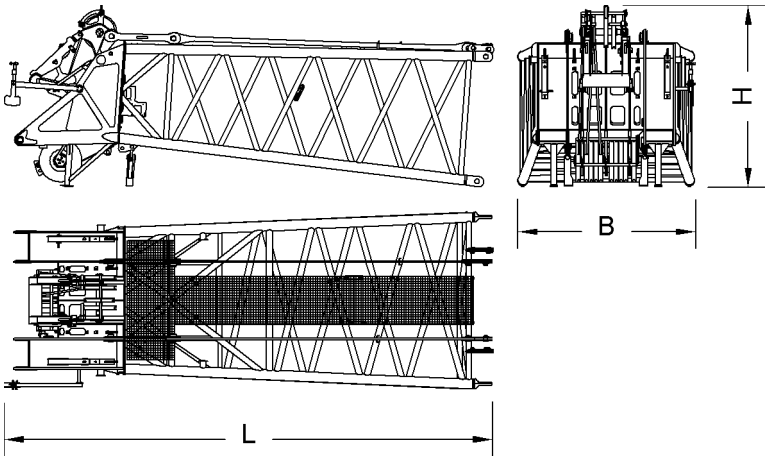

Fig. 171: Main boom head section 2821.24 dimensions

Name	Value
System length	7000 mm 23‘ ft-in
System width	2800 mm 9‘ 2“ ft-in
System height	2100 mm 6‘ 11“ ft-in

LWN/LR.x/V03.01//Auslieferung/2015-06-03/en

copyright by
LIEBHERR

Name		Value
L	Length	8055 mm 26‘ 5“ ft-in
B	Width	2970 mm 9‘ 9“ ft-in
H	Height	2960 mm 9‘ 9“ ft-in
Weight (incl. pendant straps)		5400 kg 11,905 lb

Tab. 92: Technical data main boom head section 2821.24

Name	Value
11th pulley Ø	720 mm 2‘ 4“ ft-in
Height (incl. brackets)	960 mm 3‘ 2“ ft-in
Weight (incl. brackets)	94 kg 207 lb
Pin Ø	80 mm 3.15“ in

Tab. 93: Technical data 11th pulley

1.11.6 Rope guide (type A/B) on main boom 2821

The rope guide:
– must be installed on a main boom with a specified length.
– improves the winding properties of the rope on the winches.
– prolongs the service life of the ropes.

Prescribed use of rope guide (type A) or rope guide (type B):

Boom configuration no.	Rope guide (type A)	Rope guide (type B)
1	x	
2	x	
3	x	
4	x	
5	x	
6		x
8		x
9		x

Tab. 94: Prescribed use of rope guide (type A) or rope guide (type B)

LWN/LR.x/V03.01//Auslieferung/2015-06-03/en

copyright by
LIEBHERR

Rope guide (type A)

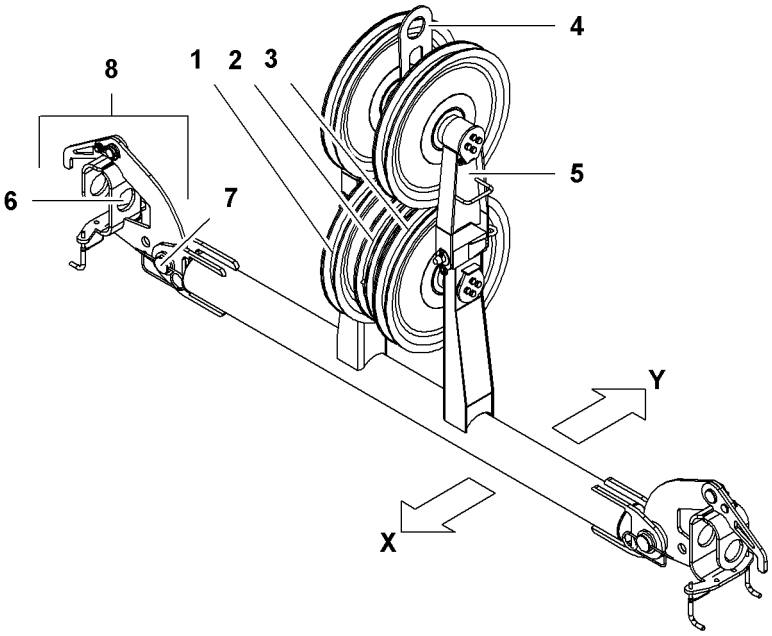

Fig. 172: Rope guide (type A)

1	Pulley for rope of winch1	**6**	Pin connection point (2x) for rope guide forks with main boom section
2	Pulley for rope of jib luffing winch	**7**	Pin connection point (2x) for rope guide forks with rope guide
3	Pulley for rope of winch2	**8**	Rope guide fork (2x)
4	Rigging point	**X**	Towards main boom head
5	Top part of rope guide (hinged)	**Y**	Towards uppercarriage

To enable rope reeving, the top part of the rope guide **5** can be unfolded.

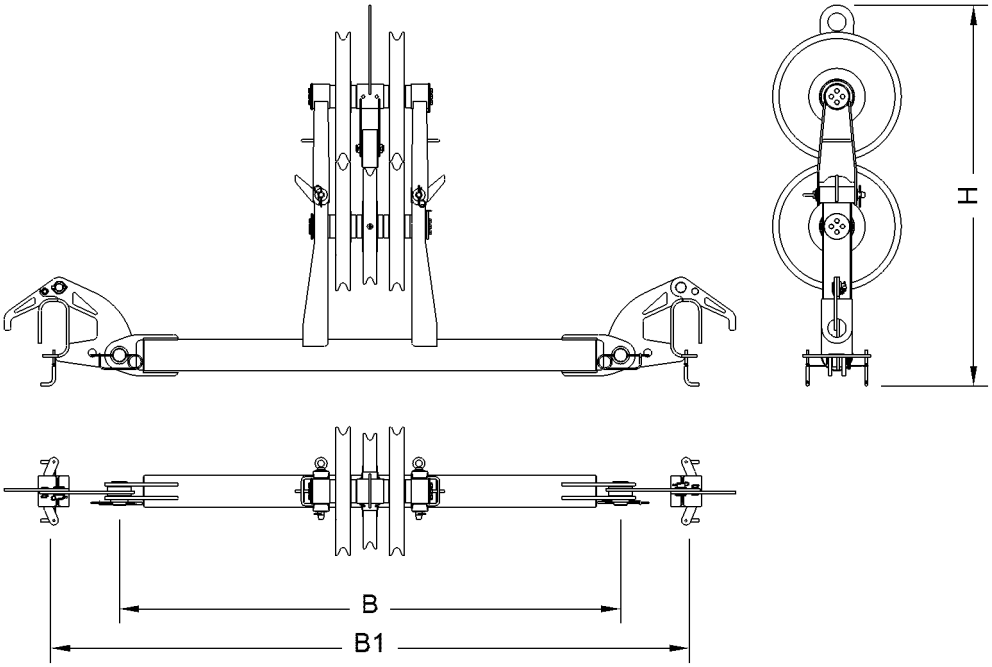

Fig. 173: Dimensions of rope guide (type A)

copyright by
LIEBHERR

Name		Value
1+3	Pulleys for rope of winch1 and rope of winch2	500 mm (1‘ 8“ ft-in) x 15 mm (0.59“ in) x 90 mm (3.54“ in)
2	Pulley for rope of jib luffing winch	450 mm (1‘ 6“ ft-in) x 11 mm (0.43“ in) x 90 mm (3.54“ in)
W	Width	2220 mm 7‘ 3“ ft-in
W1	Width (main boom section system dimension)	2800 mm 9‘ 2“ ft-in
H	Height	1650 mm 5‘ 5“ ft-in
Weight		251 kg 553 lb

Tab. 95: Rope guide (type A) technical data

Rope guide (type B)

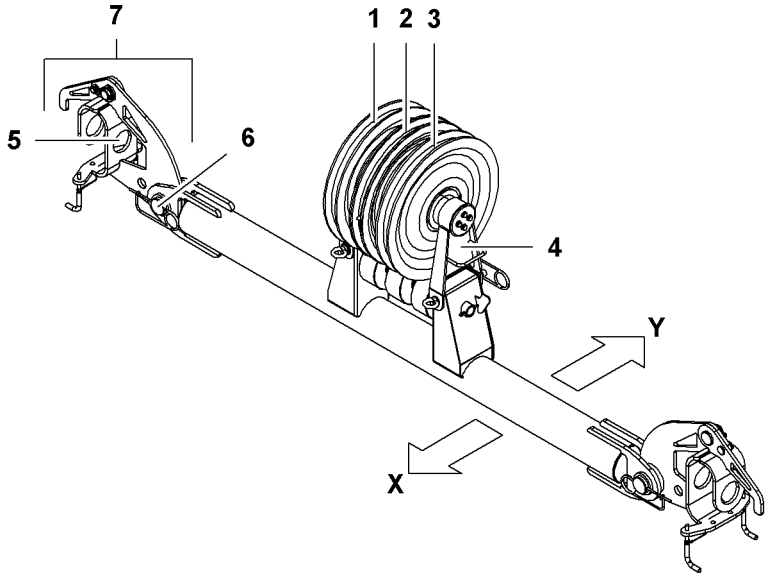

Fig. 174: Rope guide (type B)

1 Pulley for rope of winch1
2 Pulley for rope of jib luffing winch
3 Pulley for rope of winch2
4 Top part of rope guide (hinged)
5 Pin connection point (2x) for rope guide forks with main boom section
6 Pin connection point (2x) for rope guide forks with rope guide
7 Rope guide fork (2x)
X Towards main boom head
Y Towards uppercarriage

To enable rope reeving, the top part of the rope guide **4** can be unfolded.

LWN/LR.x/V03.01//Auslieferung/2015-06-03/en

copyright by
LIEBHERR

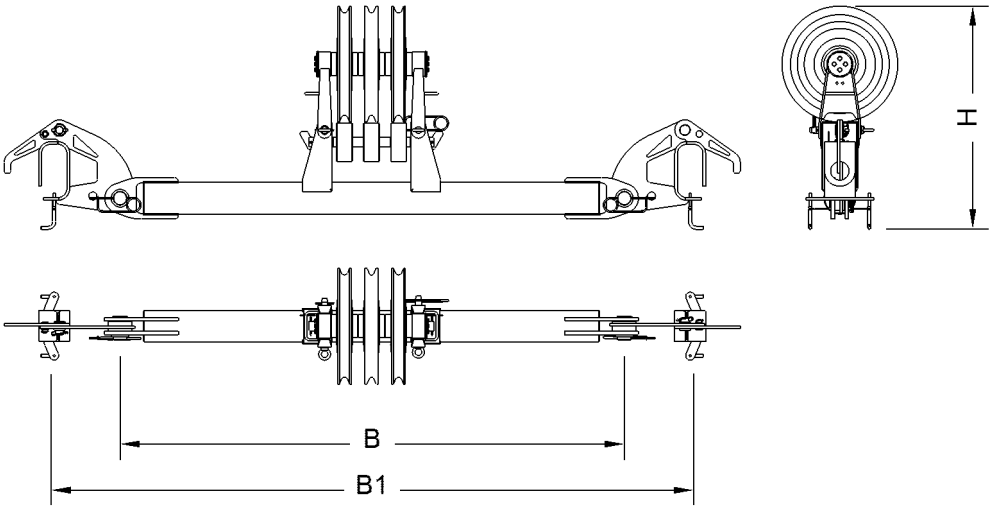

Fig. 175: Dimensions of rope guide (type B)

Name		Value
1+3	Pulleys for rope of winch1 and rope of winch2	450 mm (1‘ 6“ ft-in) x 15 mm (0.59“ in) x 90 mm (3.54“ in)
2	Pulley for rope of jib luffing winch	450 mm (1‘ 6“ ft-in) x 11 mm (0.43“ in) x 90 mm (3.54“ in)
W	Width	2220 mm 7‘ 3“ ft-in
W1	Width (main boom section system dimension)	2800 mm 9‘ 2“ ft-in
H	Height	940 mm 3‘ 1“ ft-in
Weight		180 kg 397 lb

Tab. 96: Rope guide (type B) technical data

1.11.7 Mid-point suspension on main boom 2821

The mid-point suspensions on main boom 2821 differ with steel pendant straps and CF pendant straps.

LWN/LR.x/V03.01//Auslieferung/2015-06-03/en

copyright by
LIEBHERR

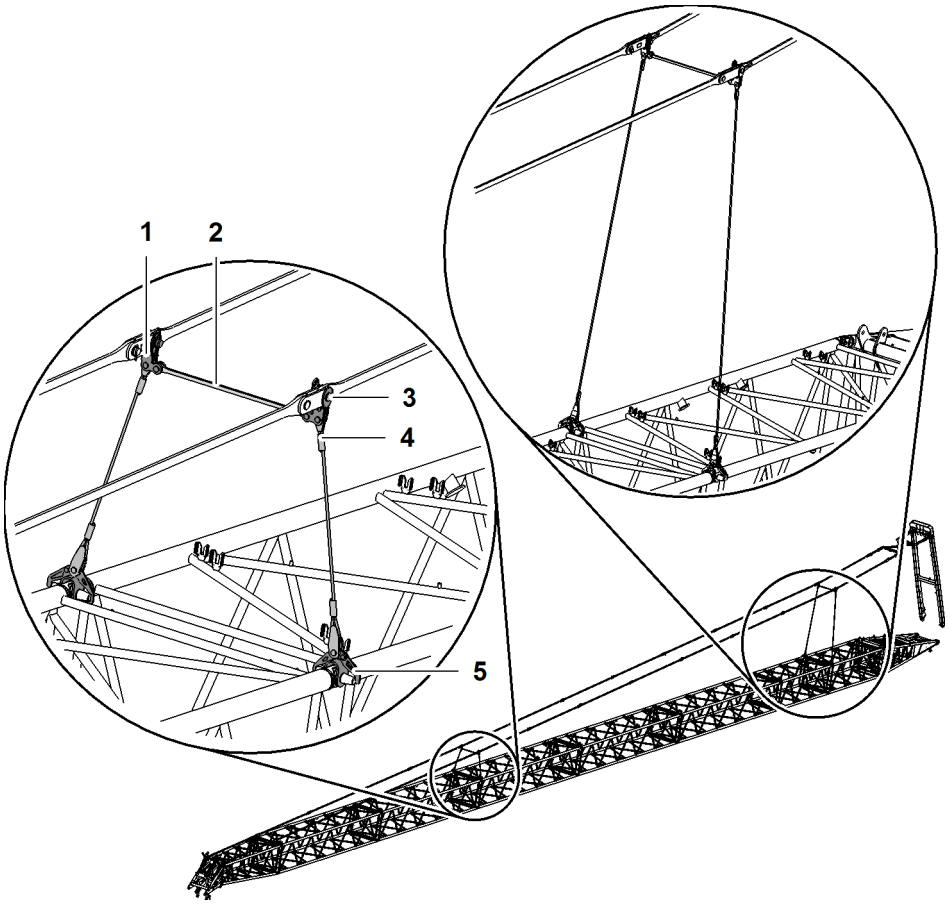

Fig. 176: Mid-point suspension on main boom 2821 (illustration of principle)

1 Connecting element (2x)
2 Spacer bracket
3 Pin (2x) for pendant straps
4 Stay ropes
5 Fork (2x)

LWN/LR.x/V03.01//Auslieferung/2015-06-03/en

copyright by
LIEBHERR

Connecting elements for steel pendant straps

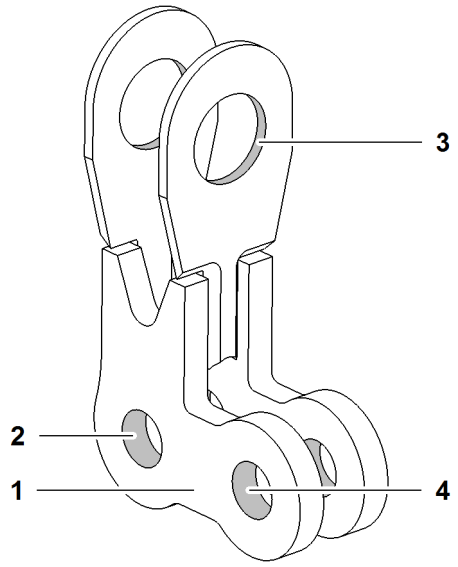

Fig. 177: Connecting elements for steel pendant straps (illustration of principle)

1	Connecting element	**3**	Pin connection point for pendant strap
2	Pin connection point for stay rope	**4**	Pin connection point for spacer bracket

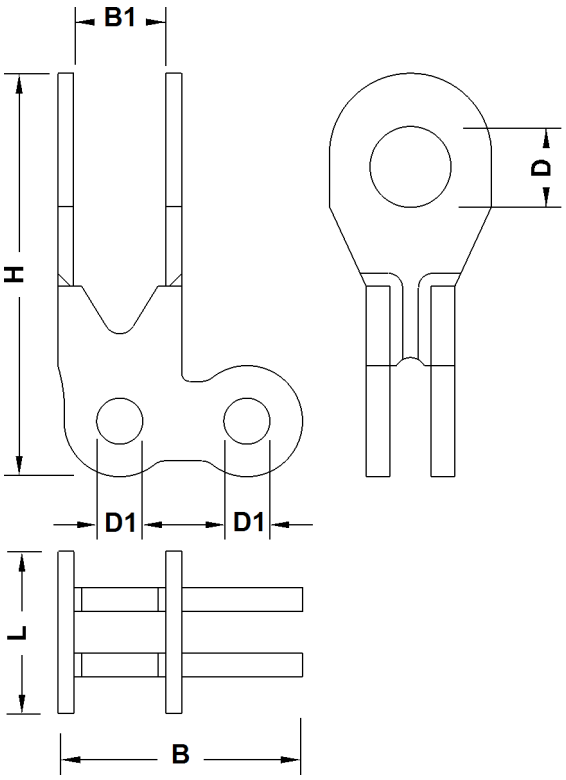

Fig. 178: Dimensions connecting elements for steel pendant straps

LWN/LR.x/V03.01//Auslieferung/2015-06-03/en

Name		Value
L	Length	112 mm 4.41“ in
H	Height	361 mm 1‘ 2“ ft-in
B	Width	190 mm 7.48“ in
B1	Width between link	58 mm 2.28“ in
D	Pin Ø	65 mm 2.56“ in
D1	Pin Ø	35 mm 1.38“ in

Tab. 97: Technical data connecting elements for steel pendant straps

Connecting elements for CF pendant straps

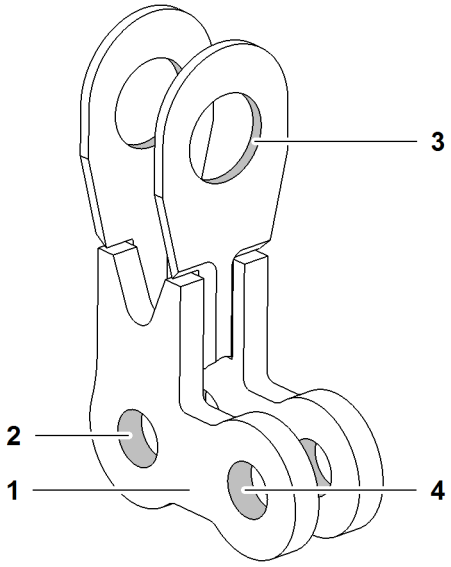

Fig. 179: Connecting elements for CF pendant straps (illustration of principle)

1 Connecting element

2 Pin connection point for stay rope

3 Pin connection point for pendant strap

4 Pin connection point for spacer bracket

LWN/LR.x/V03.01//Auslieferung/2015-06-03/en

copyright by
LIEBHERR

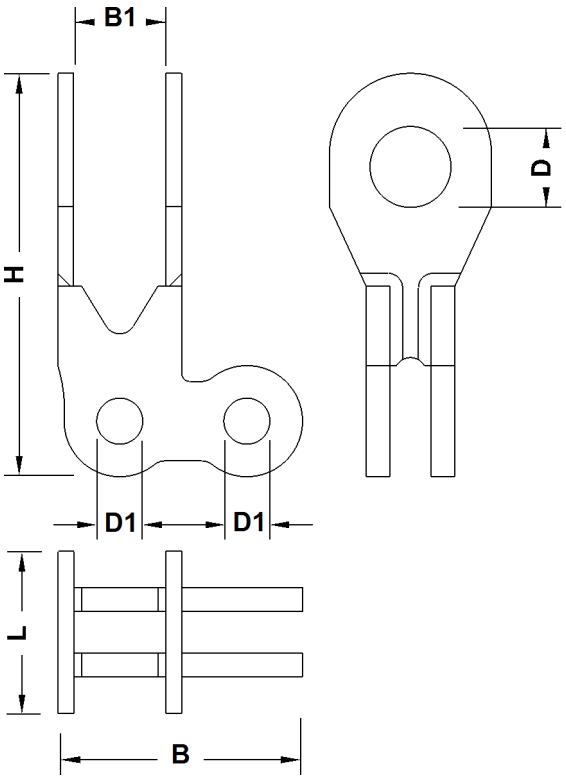

Fig. 180: Dimensions connecting elements for CF pendant straps

Name		Value
L	Length	110 mm 4.33“ in
H	Height	358 mm 1‘ 2“ ft-in
B	Width	207 mm 8.15“ in
B1	Width between link	104 mm 4.09“ in
D	Pin Ø	65 mm 2.56“ in
D1	Pin Ø	35 mm 1.38“ in

Tab. 98: Technical data connecting elements for CF pendant straps

LWN/LR.x/V03.01//Auslieferung/2015-06-03/en

copyright by
LIEBHERR

Fork

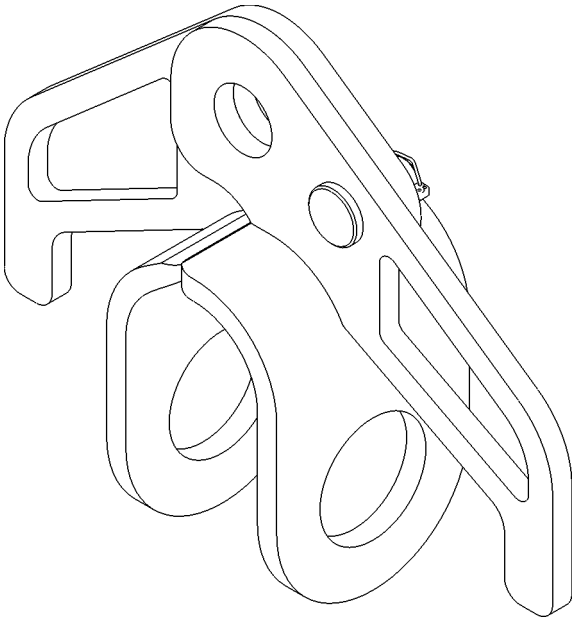

Fig. 181: Forks (illustration of principle)

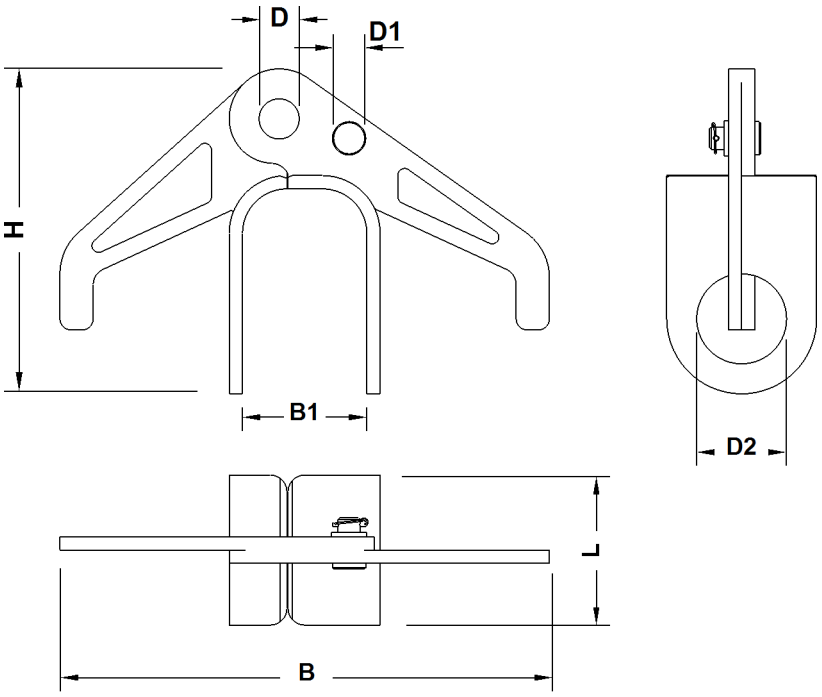

Fig. 182: Fork dimensions

Name		Value
L	Length of fork	135 mm 5.31“ in
B	Width	441 mm 1‘ 5“ ft-in

LWN/LR.x/V03.01//Auslieferung/2015-06-03/en

copyright by
LIEBHERR

Name		Value
B1	Width of fork	112 mm 4.41“ in
H	Height	293 mm 1‘ ft-in
D	Pin Ø	35 mm 1.38“ in
D1	Pin Ø	20 mm 0.79“ in
D2	Pin Ø	80 mm 3.15“ in

Tab. 99: Technical data forks

Spacer bracket

The spacer brackets are identical with steel pendant straps and CF pendant straps.

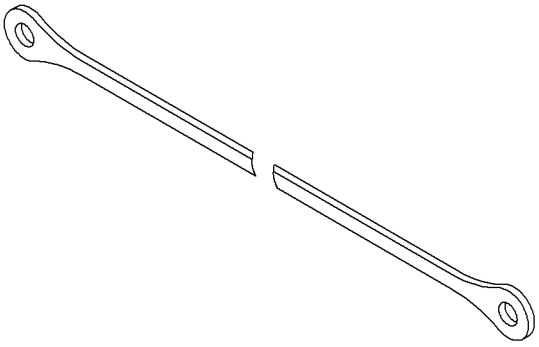

Fig. 183: Spacer brackets (illustration of principle)

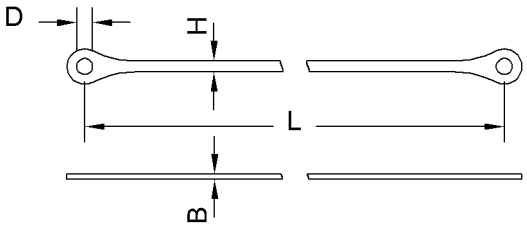

Fig. 184: Dimensions spacer brackets

Name		Value
L	Length	1100 mm 3‘ 7“ ft-in
B	Width	10 mm 0.39“ in
H	Height	40 mm 1.57“ in
D	Pin Ø	35 mm 1.38“ in

Tab. 100: Technical data spacer brackets

LWN/LR.x/V03.01//Auslieferung/2015-06-03/en

copyright by
LIEBHERR

Stay ropes

Several stay ropes are assembled to achieve defined rope lengths.

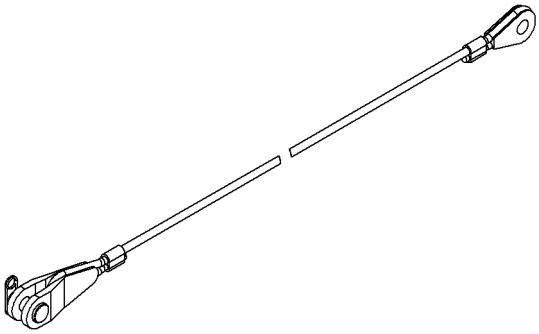

Fig. 185: Stay ropes (illustration of principle)

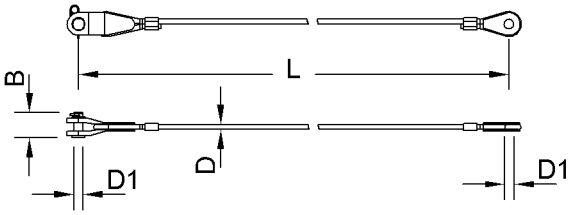

Fig. 186: Dimensions stay ropes

Name		Value
L	Length of stay rope	1100 mm 3‘ 7“ ft-in
		1300 mm 4‘ 3“ ft-in
		1600 mm 5‘ 3“ ft-in
		2100 mm 6‘ 11“ ft-in
		2600 mm 8‘ 6“ ft-in
		3000 mm 9‘ 10“ ft-in
D	Ø of stay rope	18 mm 0.71“ in
D1	Pin Ø	35 mm 1.38“ in
B	Length of pin	80 mm 3.15“ in

Tab. 101: Technical data stay ropes

Pins for steel pendant straps

The pins supplied with the pendant straps must be exchanged for longer pins.

LWN/LR.x/V03.01//Auslieferung/2015-06-03/en

copyright by
LIEBHERR

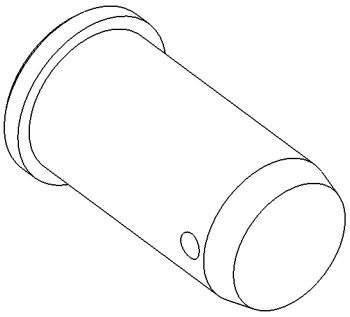

Fig. 187: Pins for steel pendant straps (illustration of principle)

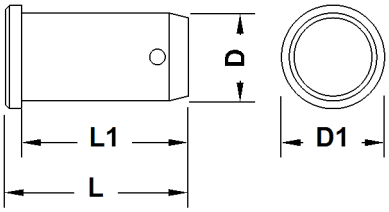

Fig. 188: Dimensions pins for steel pendant straps

Name		Value
L	Total length	140 mm 5.51“ in
L1	Length	128 mm 5.04“ in
D	Diameter	65 mm 2.56“ in
D1	Outer diameter	80 mm 3.15“ in

Tab. 102: Technical data pins for steel pendant straps

Pins for CF pendant straps

The pins supplied with the pendant straps must be exchanged for longer pins.

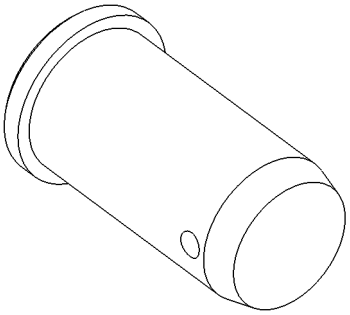

Fig. 189: Pins for CF pendant straps (illustration of principle)

LWN/LR.x/V03.01//Auslieferung/2015-06-03/en

copyright by
LIEBHERR

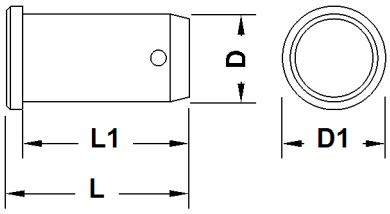

Fig. 190: Dimensions pins for CF pendant straps

Name		Value
L	Total length	170 mm 6.69“ in
L1	Length	160 mm 6.30“ in
D	Diameter	65 mm 2.56“ in
D1	Outer diameter	85 mm 3.35“ in

Tab. 103: Technical data pins for CF pendant straps

1.11.8 Steel pendant straps on main boom 2821

Steel pendant straps on main boom base section 2821.30

Equalizer of main boom base section 2821.30

Installation site in crane operation:
- Main boom 2821 (For more information see: Pendant straps A-frame1 to main boom head 2821, page 1233)
- Main boom 2821 + derrick boom 2220 (For more information see: 2821 main boom head to 2220 derrick boom head pendant straps, page 1317)
- Main boom 2821 + reducing adapter 2821/2316 (For more information see: Pendant straps A-frame1 to main boom head 2316, page 1459)

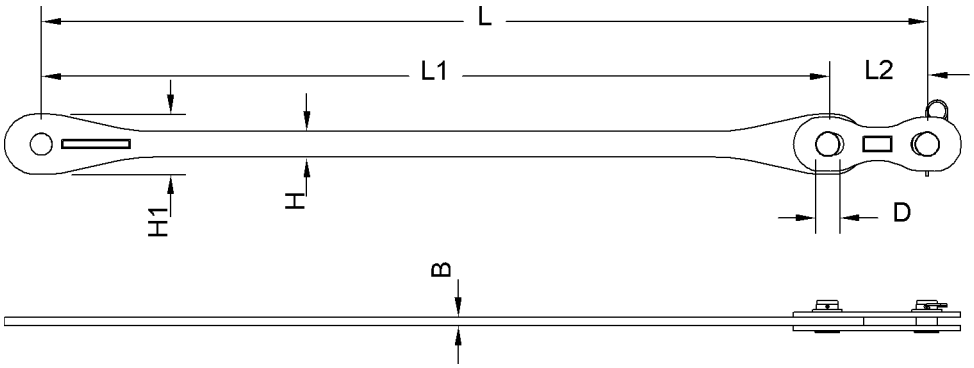

Fig. 191: Dimensions of equalizer of main boom base section 2821.30

LWN/LR.x/V03.01//Auslieferung/2015-06-03/en

copyright by
LIEBHERR

Name		Value
L	Length	2670 mm 8‘ 9“ ft-in
L1	Length of pendant strap	2370 mm 7‘ 9“ ft-in
L2	Length of connecting link	300 mm 1‘ ft-in
W	Width of pendant strap	25 mm 0.98“ in
H	Height of pendant strap	77 mm 3.03“ in
H1	Height of pendant strap	180 mm 7.09“ in
D	Pin Ø	65 mm 2.56“ in
Weight		67 kg 148 lb

Tab. 104: Technical data equalizer of main boom base section 2821.30

Steel pendant straps on main boom section 2821.30 3 m (10 ft)

Main boom pendant strap 3 m (10 ft)

Installation site in crane operation:
- Main boom 2821 (For more information see: Pendant straps A-frame1 to main boom head 2821, page 1233)
- Main boom 2821 + derrick boom 2220 (For more information see: 2821 main boom head to 2220 derrick boom head pendant straps, page 1317)
- Main boom 2821 + reducing adapter 2821/2316 (For more information see: Pendant straps A-frame1 to main boom head 2316, page 1459)

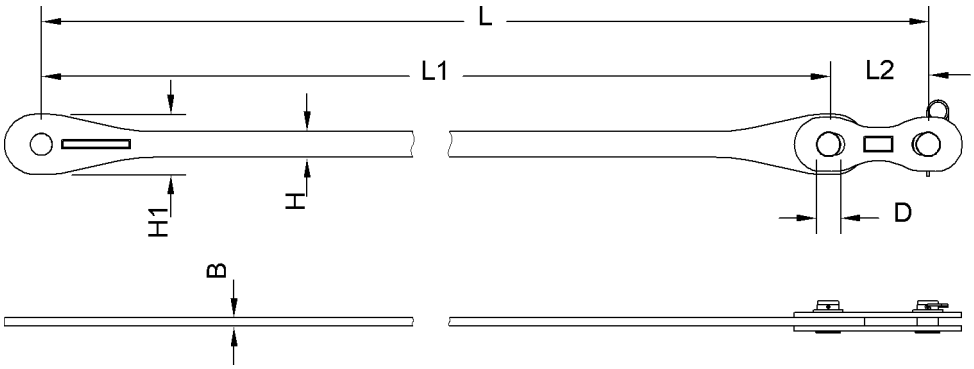

Fig. 192: Dimensions main boom pendant strap 3 m (10 ft)

Name		Value
L	Length	3000 mm 9‘ 10“ ft-in

LWN/LR.x/V03.01/Auslieferung/2015-06-03/en

Name		Value
L1	Length of pendant strap	2700 mm 8‘ 10“ ft-in
L2	Length of connecting link	300 mm 1‘ ft-in
H	Height of pendant strap	77 mm 3.03“ in
H1	Height of pendant strap	180 mm 7.09“ in
W	Width of pendant strap	25 mm 0.98“ in
D	Pin Ø	65 mm 2.56“ in
Weight		72 kg 159 lb

Tab. 105: Technical data main boom pendant strap 3 m (10 ft)

Jib backstay strap 3 m (10 ft)

Installation site in crane operation:
- Luffing jib 2316 (For more information see: Jib backstay straps A-frame2 to main boom base section 2821, page 1575)
- Luffing jib 1916 (For more information see: Jib backstay straps A-frame2 to main boom base section 2821, page 1594)
- Luffing jib 2316 + midfall 2316 (For more information see: Jib backstay straps A-frame2 to main boom base section 2821, page 1672)
- Luffing jib 1916 + midfall 1916 (For more information see: Jib backstay straps A-frame2 to main boom base section 2821, page 1685)

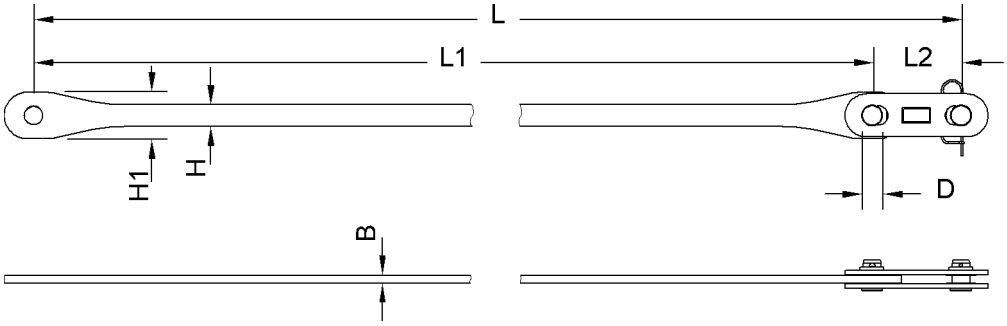

Fig. 193: Dimensions jib backstay strap 3 m (10 ft)

Name		Value
L	Length	3000 mm 9‘ 10“ ft-in
L1	Length of pendant strap	2730 mm 8‘ 11“ ft-in
L2	Length of connecting link	270 mm 10.63“ in

LWN/LR.x/V03.01//Auslieferung/2015-06-03/en

copyright by
LIEBHERR

Name		Value
W	Width of pendant strap	22 mm 0.87“ in
H	Height of pendant strap	66 mm 2.60“ in
H1	Height of pendant strap	140 mm 5.51“ in
D	Pin Ø	55 mm 2.17“ in
Weight		53 kg 117 lb

Tab. 106: Technical data jib backstay strap 3 m (10 ft)

Steel pendant straps on main boom section 2821.30 6 m (20 ft)

Main boom pendant strap 6 m (20 ft)

Installation site in crane operation:
- Main boom 2821 (For more information see: Pendant straps A-frame1 to main boom head 2821, page 1233)
- Main boom 2821 + derrick boom 2220 (For more information see: 2821 main boom head to 2220 derrick boom head pendant straps, page 1317)
- Main boom 2821 + reducing adapter 2821/2316 (For more information see: Pendant straps A-frame1 to main boom head 2316, page 1459)

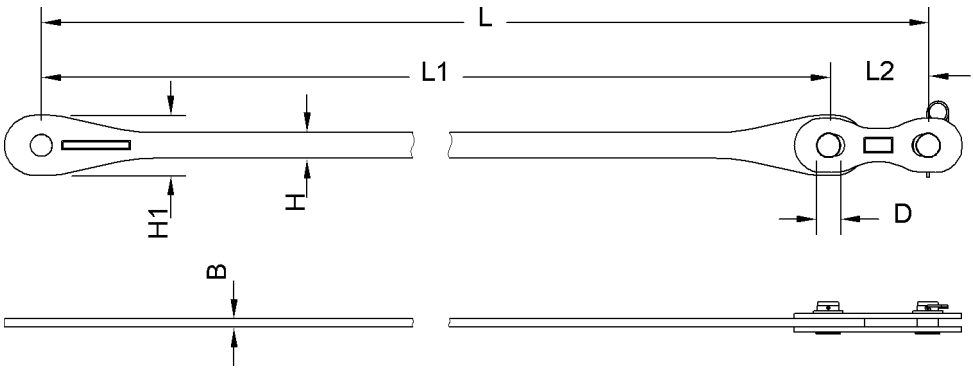

Fig. 194: Dimensions main boom pendant strap 6 m (20 ft)

Name		Value
L	Length	6000 mm 19‘ 8“ ft-in
L1	Length of pendant strap	5700 mm 18‘ 8“ ft-in
L2	Length of connecting link	300 mm 1‘ ft-in
H	Height of pendant strap	77 mm 3.03“ in

LWN/LR.x/V03.01//Auslieferung/2015-06-03/en

copyright by LIEBHERR

Name		Value
H1	Height of pendant strap	180 mm 7.09“ in
W	Width of pendant strap	25 mm 0.98“ in
D	Pin Ø	65 mm 2.56“ in
Weight		118 kg 260 lb

Tab. 107: Technical data main boom pendant strap 6 m (20 ft)

Jib backstay strap 6 m (20 ft)

Installation site in crane operation:
- Luffing jib 2316 (For more information see: Jib backstay straps A-frame2 to main boom base section 2821, page 1575)
- Luffing jib 1916 (For more information see: Jib backstay straps A-frame2 to main boom base section 2821, page 1594)
- Luffing jib 2316 + midfall 2316 (For more information see: Jib backstay straps A-frame2 to main boom base section 2821, page 1672)
- Luffing jib 1916 + midfall 1916 (For more information see: Jib backstay straps A-frame2 to main boom base section 2821, page 1685)

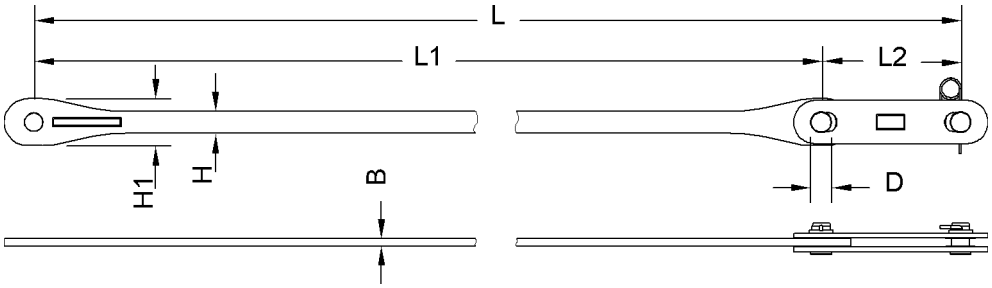

Fig. 195: Dimensions jib backstay strap 6 m (20 ft)

Name		Value
L	Length	6000 mm 19‘ 8“ ft-in
L1	Length of pendant strap	5580 mm 18‘ 4“ ft-in
L2	Length of connecting link	420 mm 1‘ 5“ ft-in
W	Width of pendant strap	22 mm 0.87“ in
H	Height of pendant strap	66 mm 2.60“ in
H1	Height of pendant strap	140 mm 5.51“ in
D	Pin Ø	55 mm 2.17“ in

LWN/LR.x/V03.01//Auslieferung/2015-06-03/en

copyright by
LIEBHERR

Name	Value
Weight	89 kg 196 lb

Tab. 108: Technical data jib backstay strap 6 m (20 ft)

Steel pendant straps on main boom section 2821.30 12 m (40 ft)

Main boom pendant strap 12 m (40 ft)

Installation site in crane operation:
- Main boom 2821 (For more information see: Pendant straps A-frame1 to main boom head 2821, page 1233)
- Main boom 2821 + derrick boom 2220 (For more information see: 2821 main boom head to 2220 derrick boom head pendant straps, page 1317)
- Main boom 2821 + reducing adapter 2821/2316 (For more information see: Pendant straps A-frame1 to main boom head 2316, page 1459)

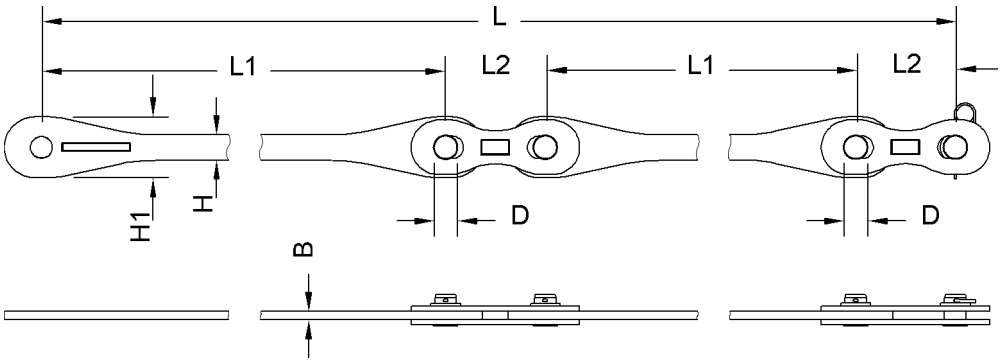

Fig. 196: Dimensions main boom pendant strap 12 m (40 ft)

Name		Value
L	Length	12000 mm 39‘ 4“ ft-in
L1	Length of pendant strap	5700 mm 18‘ 8“ ft-in
L2	Length of connecting link	300 mm 1‘ ft-in
W	Width of pendant strap	25 mm 0.98“ in
H	Height of pendant strap	77 mm 3.03“ in
H1	Height of pendant strap	180 mm 7.09“ in
D	Pin Ø	65 mm 2.56“ in
Weight		228 kg 503 lb

Tab. 109: Technical data main boom pendant strap 12 m (40 ft)

LWN/LR.x/V03.01//Auslieferung/2015-06-03/en

copyright by
LIEBHERR

Jib backstay strap 12 m (40 ft)

Installation site in crane operation:
- Luffing jib 2316 (For more information see: Jib backstay straps A-frame2 to main boom base section 2821, page 1575)
- Luffing jib 1916 (For more information see: Jib backstay straps A-frame2 to main boom base section 2821, page 1594)
- Luffing jib 2316 + midfall 2316 (For more information see: Jib backstay straps A-frame2 to main boom base section 2821, page 1672)
- Luffing jib 1916 + midfall 1916 (For more information see: Jib backstay straps A-frame2 to main boom base section 2821, page 1685)

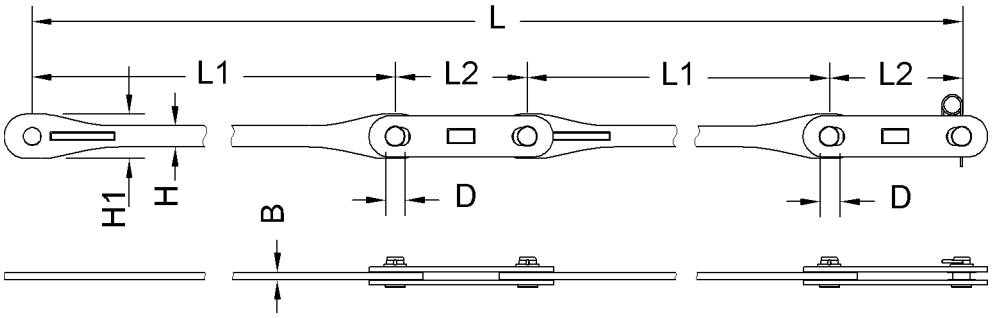

Fig. 197: Dimensions jib backstay strap 12 m (40 ft)

Name		Value
L	Length	12000 mm 39‘ 4“ ft-in
L1	Length of pendant strap	5580 mm 18‘ 4“ ft-in
L2	Length of connecting link	420 mm 1‘ 5“ ft-in
W	Width of pendant strap	22 mm 0.87“ in
H	Height of pendant strap	66 mm 2.60“ in
H1	Height of pendant strap	140 mm 5.51“ in
D	Pin Ø	55 mm 2.17“ in
Weight		178 kg 392 lb

Tab. 110: Technical data jib backstay strap 12 m (40 ft)

Steel pendant straps on main boom head 2821.24

Main boom pendant strap on main boom head 2821.24

Installation site in crane operation:
- Main boom 2821 (For more information see: Pendant straps A-frame1 to main boom head 2821, page 1233)

LWN/LR.x/V03.01//Auslieferung/2015-06-03/en

copyright by
LIEBHERR

– Main boom 2821 + derrick boom 2220 (For more information see: 2821 main boom head to 2220 derrick boom head pendant straps, page 1317)

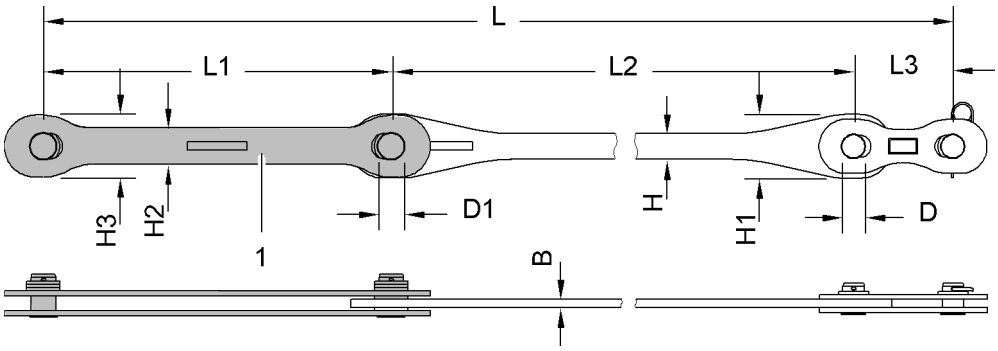

Fig. 198: Dimensions of main boom pendant strap on main boom head 2821.24

1 Connecting link (2x)

Note

If the machine is equipped with a derrick boom:

▶ Replace connecting links **1** on main boom head 2821.24 with connecting links with tension load cell (For more information see: Connecting links with tension load cell, page 197) .

Name		Value
L	Length	6300 mm 20‘ 8“ ft-in
L1	Length of connecting link	1050 mm 3‘ 5“ ft-in
L2	Length of pendant strap	4950 mm 16‘ 3“ ft-in
L3	Length of connecting link	300 mm 1‘ ft-in
W	Width of pendant strap	25 mm 0.98“ in
H	Height of pendant strap	77 mm 3.03“ in
H1	Height of pendant strap	180 mm 7.09“ in
H2	Height of connecting link	110 mm 4.33“ in
H3	Height of connecting link	185 mm 7.28“ in
D	Pin Ø	65 mm 2.56“ in
D1	Pin Ø	75 mm 2.95“ in

LWN/LR.x/V03.01//Auslieferung/2015-06-03/en

copyright by
LIEBHERR

Name	Value
Weight	154 kg 340 lb

Tab. 111: Technical data main boom pendant strap on main boom head 2821.24

Additional pendant straps/connecting links/tension load cells

Connecting links with tension load cell

Installation site in crane mode:
– Main boom 2821 + derrick boom 2220 (For more information see: 2821 main boom head to 2220 derrick boom head pendant straps, page 1317)

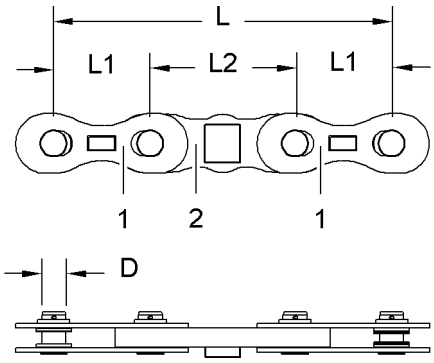

Fig. 199: Dimensions connecting links with tension load cell

1 Connecting links **2** Tension load cell

Name		Value
L	Length	1050 mm 3‘ 5“ ft-in
L1	Length of connecting link	300 mm 1‘ ft-in
L2	Length of tension load cell	450 mm 1‘ 6“ ft-in
D	Pin Ø	75 mm 2.95“ in
Weight		75 kg 165 lb

Tab. 112: Technical data connecting links with tension load cell

Pendant strap with connecting link

Installation site in crane mode:
– Main boom 2821 + derrick boom 2220 (For more information see: 2821 main boom head to 2220 derrick boom head pendant straps, page 1317)

LWN/LR.x/V03.01//Auslieferung/2015-06-03/en

copyright by LIEBHERR

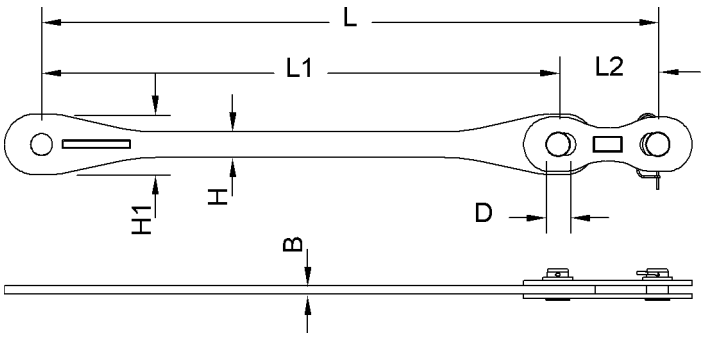

Fig. 200: Dimensions pendant strap with connecting link

Name		Value
L	Length	1855 mm 6‘ 1“ ft-in
L1	Length of pendant strap	1555 mm 5‘ 1“ ft-in
L2	Length of connecting link	300 mm 1‘ ft-in
B	Width of pendant strap	25 mm 0.98“ in
H	Height of pendant strap	77 mm 3.03“ in
H1	Height of pendant strap	180 mm 7.09“ in
D	Pin Ø	65 mm 2.56“ in
Weight		37 kg 81.57 lb

Tab. 113: Technical data pendant strap with connecting link

1.11.9 CF pendant straps on main boom 2821

CF pendant straps on main boom base section 2821.30

Equalizer of main boom base section 2821.30

Installation site in crane operation:
- Main boom 2821 (For more information see: Pendant straps A-frame1 to main boom head 2821, page 1234)
- Main boom 2821 + derrick boom 2220 (For more information see: 2821 main boom head to 2220 derrick boom head pendant straps, page 1320)
- Main boom 2821 + reducing adapter 2821/2316 (For more information see: Pendant straps A-frame1 to main boom head 2316, page 1461)

LWN/LR.x/V03.01//Auslieferung/2015-06-03/en

copyright by
LIEBHERR

Generation A of equalizer for main boom base section 2821.30

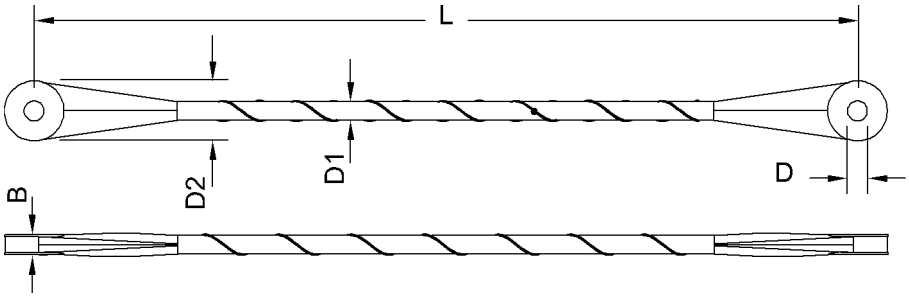

Fig. 201: Dimensions of equalizer of main boom base section 2821.30

Name		Value
L	Length of pendant strap	2700 mm 8‘ 10“ ft-in
W	Width	66 mm 2.60“ in
D	Pin Ø	65 mm 2.56“ in
D1	Pendant strap Ø	60 mm 2.36“ in
D2	Pendant strap Ø	196 mm 7.72“ in
Weight		29 kg 63.93 lb

Tab. 114: Technical data equalizer of main boom base section 2821.30

Generation B of equalizer for main boom base section 2821.30

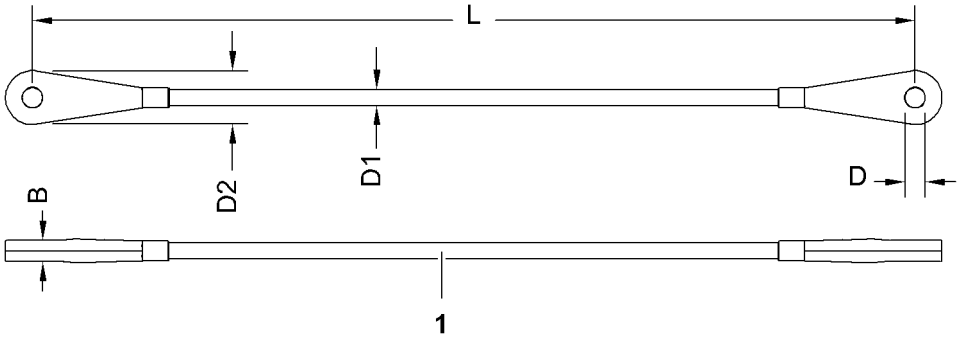

Fig. 202: Dimensions equalizer of main boom base section 2821.30

1 Wire mesh hose as protective sheath

Name		Value
L	Length of pendant strap	2700 mm 8‘ 10“ ft-in

LWN/LR.x/V03.01//Auslieferung/2015-06-03/en

copyright by
LIEBHERR

Name		Value
B	Width	63 mm 2.48“ in
D	Pin Ø	65 mm 2.56“ in
D1	Pendant strap Ø	52 mm 2.05“ in
D2	Pendant strap Ø	207 mm 8.15“ in
Weight		29 kg 63.93 lb

Tab. 115: Technical data equalizer of main boom base section 2821.30

Connecting link

Installation site in crane mode:
- Fixed jib 1507 (For more information see: Jib backstay straps A-frame2 to main boom base section 2821, page 1499)
- Luffing jib 2316 (For more information see: Jib backstay straps A-frame2 to main boom base section 2821, page 1577)
- Luffing jib 1916 (For more information see: Jib backstay straps A-frame2 to main boom base section 2821, page 1596)
- Luffing jib 2316 + midfall 2316 (For more information see: Jib backstay straps A-frame2 to main boom base section 2821, page 1674)
- Luffing jib 1916 + midfall 1916 (For more information see: Jib backstay straps A-frame2 to main boom base section 2821, page 1687)

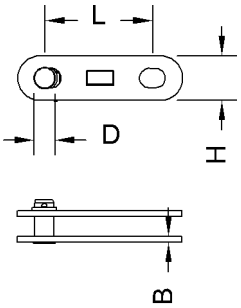

Fig. 203: Dimensions connecting link

Name		Value
L	Length of connecting link	350 mm 1‘ 2“ ft-in
W	Width of connecting link	18 mm 0.71“ in
H	Height of connecting link	140 mm 5.51“ in
D	Pin Ø	60 mm 2.36“ in

LWN/LR.x/V03.01//Auslieferung/2015-06-03/en

copyright by
LIEBHERR

Name	Value
Weight	6 kg 13.23 lb

Tab. 116: Technical data connecting link

CF pendant straps on main boom section 2821.30 3 m (10 ft)

Main boom pendant strap 3 m (10 ft)

Installation site in crane operation:
- Main boom 2821 (For more information see: Pendant straps A-frame1 to main boom head 2821, page 1234)
- Main boom 2821 + derrick boom 2220 (For more information see: 2821 main boom head to 2220 derrick boom head pendant straps, page 1320)
- Main boom 2821 + reducing adapter 2821/2316 (For more information see: Pendant straps A-frame1 to main boom head 2316, page 1461)

Generation A of main boom pendant strap 3 m (10 ft)

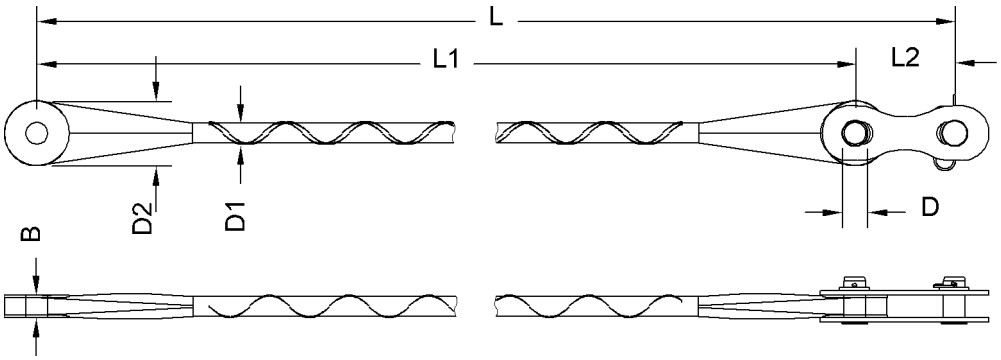

Fig. 204: Dimensions main boom pendant strap 3 m (10 ft)

Name		Value
L	Length	3000 mm 9‘ 10“ ft-in
L1	Length of pendant strap	2700 mm 8‘ 10“ ft-in
L2	Length of connecting link	300 mm 1‘ ft-in
W	Width	66 mm 2.60“ in
D	Pin Ø	65 mm 2.56“ in
D1	Pendant strap Ø	60 mm 2.36“ in
D2	Pendant strap Ø	196 mm 7.72“ in

LWN/LR.x/V03.01//Auslieferung/2015-06-03/en

copyright by
LIEBHERR

Name	Value
Weight	51 kg 112 lb

Tab. 117: Technical data main boom pendant strap 3 m (10 ft)

Generation B of main boom pendant strap 3 m (10 ft)

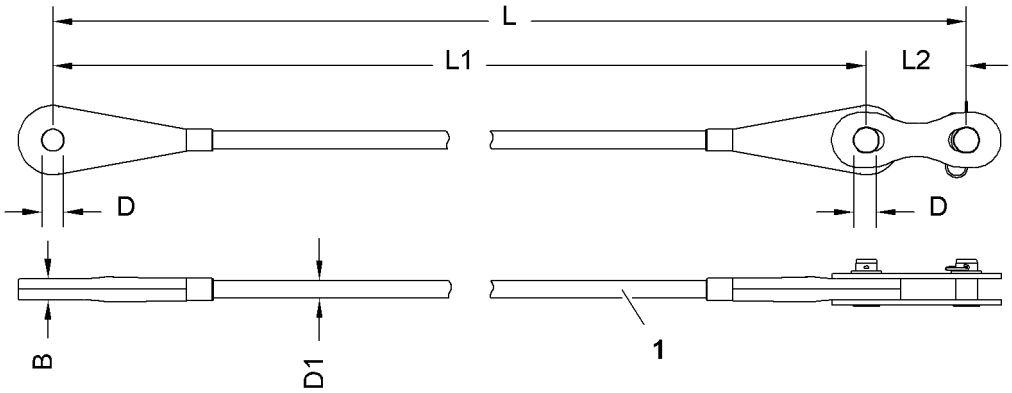

Fig. 205: Dimensions main boom pendant strap 3 m (10 ft)

1 Wire mesh hose as protective sheath

Name		Value
L	Length	3000 mm 9‘ 10“ ft-in
L1	Length of pendant strap	2700 mm 8‘ 10“ ft-in
L2	Length of connecting link	300 mm 1‘ ft-in
W	Width	63 mm 2.48“ in
D	Pin Ø	65 mm 2.56“ in
D1	Pendant strap Ø	52 mm 2.05“ in
Weight		51 kg 112 lb

Tab. 118: Technical data main boom pendant strap 3 m (10 ft)

Jib backstay strap 3 m (10 ft)

Installation site in crane mode:
- Fixed jib 1507 (For more information see: Jib backstay straps A-frame2 to main boom base section 2821, page 1499)
- Luffing jib 2316 (For more information see: Jib backstay straps A-frame2 to main boom base section 2821, page 1577)
- Luffing jib 1916 (For more information see: Jib backstay straps A-frame2 to main boom base section 2821, page 1596)

LWN/LR.x/V03.01//Auslieferung/2015-06-03/en

copyright by LIEBHERR

– Luffing jib 2316 + midfall 2316 (For more information see: Jib backstay straps A-frame2 to main boom base section 2821, page 1674)
– Luffing jib 1916 + midfall 1916 (For more information see: Jib backstay straps A-frame2 to main boom base section 2821, page 1687)

Generation A of jib backstay strap 3 m (10 ft)

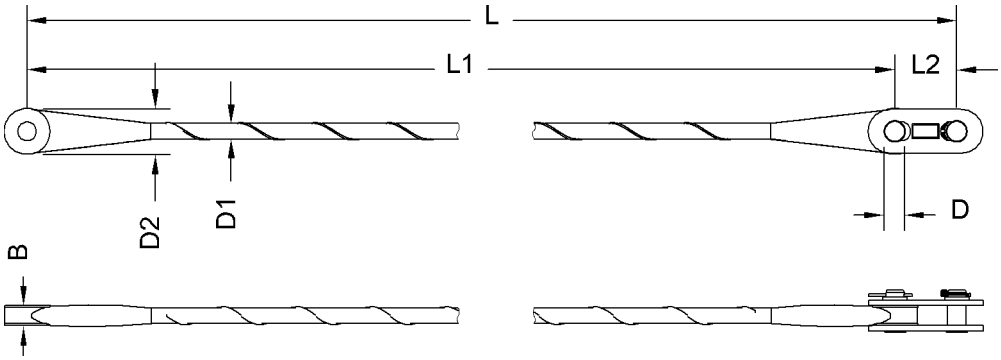

Fig. 206: Dimensions jib backstay strap 3 m (10 ft)

Name		Value
L	Length	3000 mm 9‘ 10“ ft-in
L1	Length of pendant strap	2800 mm 9‘ 2“ ft-in
L2	Length of connecting link	200 mm 7.87“ in
W	Width	64 mm 2.52“ in
D	Pin Ø	60 mm 2.36“ in
D1	Pendant strap Ø	50 mm 1.97“ in
D2	Pendant strap Ø	148 mm 5.83“ in
Weight		35 kg 77.16 lb

Tab. 119: Technical data jib backstay strap 3 m (10 ft)

LWN/LR.x/V03.01//Auslieferung/2015-06-03/en

copyright by
LIEBHERR

Generation B of jib backstay strap 3 m (10 ft)

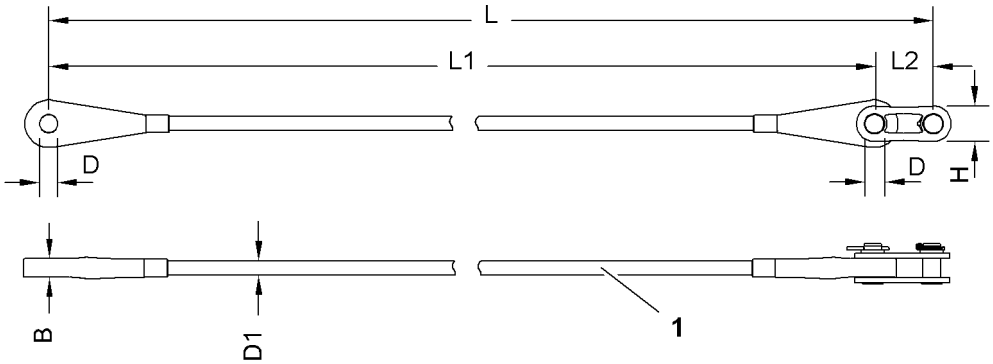

Fig. 207: Dimensions jib backstay strap 3 m (10 ft)

1 Wire mesh hose as protective sheath

Name		Value
L	Length	3000 mm 9‘ 10“ ft-in
L1	Length of pendant strap	2800 mm 9‘ 2“ ft-in
L2	Length of connecting link	200 mm 7.87“ in
W	Width	63 mm 2.48“ in
H	Height of connecting link	121 mm 4.76“ in
D	Pin Ø	60 mm 2.36“ in
D1	Pendant strap Ø	48 mm 1.89“ in
Weight		26 kg 57.32 lb

Tab. 120: Technical data jib backstay strap 3 m (10 ft)

CF pendant straps on main boom section 2821.30 6 m (20 ft)

Main boom pendant strap 6 m (20 ft)

Installation site in crane mode:
- Main boom 2821 (For more information see: Pendant straps A-frame1 to main boom head 2821, page 1234)
- Main boom 2821 + derrick boom 2220 (For more information see: 2821 main boom head to 2220 derrick boom head pendant straps, page 1320)
- Main boom 2821 + reducing adapter 2821/2316 (For more information see: Pendant straps A-frame1 to main boom head 2316, page 1461)

LWN/LR.x/V03.01//Auslieferung/2015-06-03/en

copyright by LIEBHERR

Generation A of main boom pendant strap 6 m (20 ft)

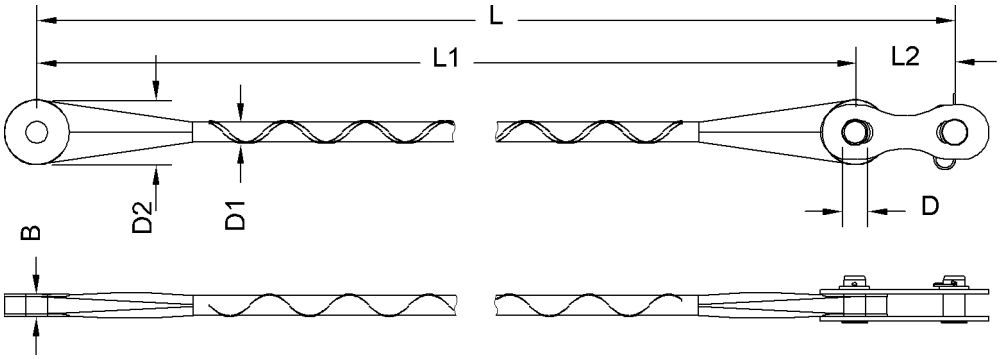

Fig. 208: Dimensions main boom pendant strap 6 m (20 ft)

Name		Value
L	Length	6000 mm 19‘ 8“ ft-in
L1	Length of pendant strap	5700 mm 18‘ 8“ ft-in
L2	Length of connecting link	300 mm 1‘ ft-in
W	Width	66 mm 2.60“ in
D	Pin Ø	65 mm 2.56“ in
D1	Pendant strap Ø	60 mm 2.36“ in
D2	Pendant strap Ø	196 mm 7.72“ in
Weight		62 kg 137 lb

Tab. 121: Technical data main boom pendant strap 6 m (20 ft)

LWN/LR.x/V03.01//Auslieferung/2015-06-03/en

copyright by
LIEBHERR

Generation B of main boom pendant strap 6 m (20 ft)

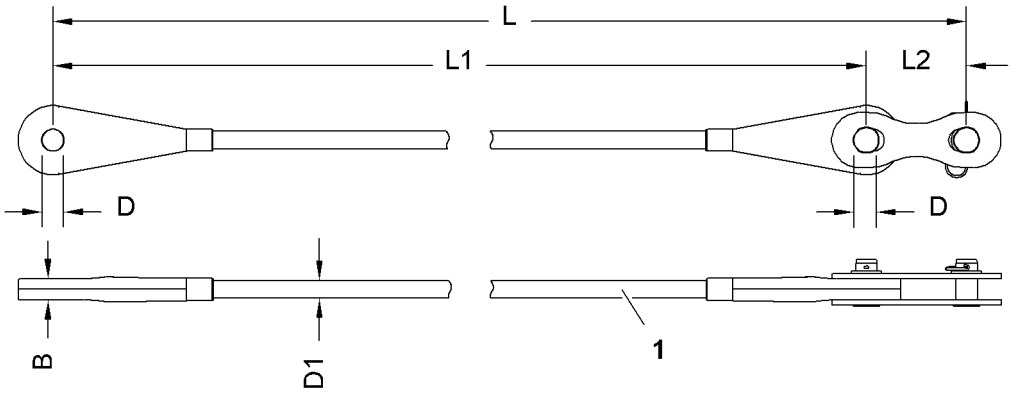

Fig. 209: Dimensions main boom pendant strap 6 m (20 ft)

1 Wire mesh hose as protective sheath

Name		Value
L	Length	6000 mm 19‘ 8“ ft-in
L1	Length of pendant strap	5700 mm 18‘ 8“ ft-in
L2	Length of connecting link	300 mm 1‘ ft-in
W	Width	63 mm 2.48“ in
D	Pin Ø	65 mm 2.56“ in
D1	Pendant strap Ø	52 mm 2.05“ in
Weight		62 kg 137 lb

Tab. 122: Technical data main boom pendant strap 6 m (20 ft)

Jib backstay strap 6 m (20 ft)

Installation site in crane mode:
- Fixed jib 1507 (For more information see: Jib backstay straps A-frame2 to main boom base section 2821, page 1499)
- Luffing jib 2316 (For more information see: Jib backstay straps A-frame2 to main boom base section 2821, page 1577)
- Luffing jib 1916 (For more information see: Jib backstay straps A-frame2 to main boom base section 2821, page 1596)
- Luffing jib 2316 + midfall 2316 (For more information see: Jib backstay straps A-frame2 to main boom base section 2821, page 1674)
- Luffing jib 1916 + midfall 1916 (For more information see: Jib backstay straps A-frame2 to main boom base section 2821, page 1687)

LWN/LR.x/V03.01/Auslieferung/2015-06-03/en

copyright by LIEBHERR

Generation A of jib backstay strap 6 m (20 ft)

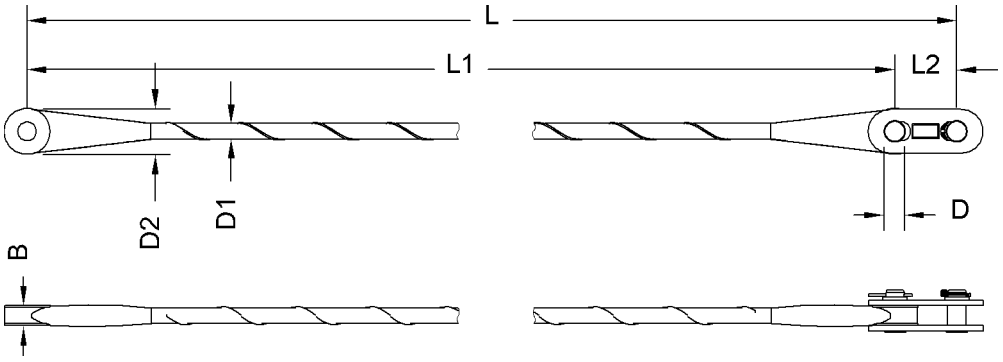

Fig. 210: Dimensions jib backstay strap 6 m (20 ft)

Name		Value
L	Length	6000 mm 19‘ 8“ ft-in
L1	Length of pendant strap	5800 mm 19‘ ft-in
L2	Length of connecting link	200 mm 7.87“ in
W	Width	64 mm 2.52“ in
D	Pin Ø	60 mm 2.36“ in
D1	Pendant strap Ø	50 mm 1.97“ in
D2	Pendant strap Ø	148 mm 5.83“ in
Weight		43 kg 94.80 lb

Tab. 123: Technical data jib backstay strap 6 m (20 ft)

Generation B of jib backstay strap 6 m (20 ft)

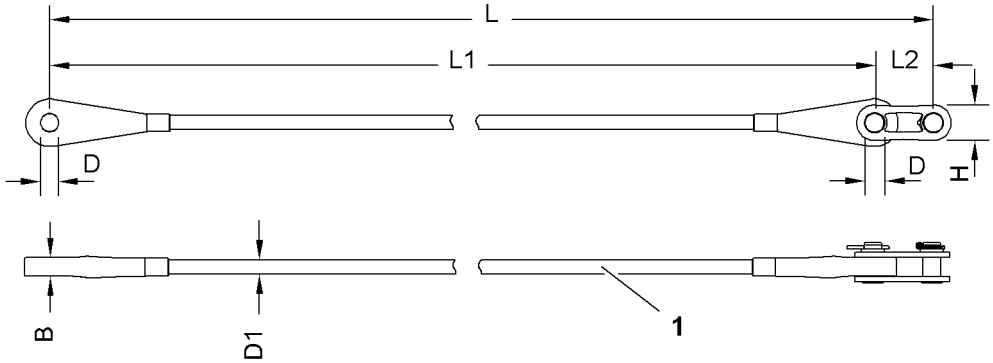

Fig. 211: Dimensions jib backstay strap 6 m (20 ft)

1 Wire mesh hose as protective sheath

LWN/LR.x/V03.01//Auslieferung/2015-06-03/en

copyright by
LIEBHERR

Name		Value
L	Length	6000 mm 19‘ 8“ ft-in
L1	Length of pendant strap	5800 mm 19‘ ft-in
L2	Length of connecting link	200 mm 7.87“ in
W	Width	63 mm 2.48“ in
H	Height of connecting link	121 mm 4.76“ in
D	Pin Ø	60 mm 2.36“ in
D1	Pendant strap Ø	48 mm 1.89“ in
Weight		32 kg 70.55 lb

Tab. 124: Technical data jib backstay strap 6 m (20 ft)

CF pendant straps on main boom section 2821.30 12 m (40 ft)

Main boom pendant strap 12 m (40 ft)

Installation site in crane operation:
- Main boom 2821 (For more information see: Pendant straps A-frame1 to main boom head 2821, page 1234)
- Main boom 2821 + derrick boom 2220 (For more information see: 2821 main boom head to 2220 derrick boom head pendant straps, page 1320)
- Main boom 2821 + reducing adapter 2821/2316 (For more information see: Pendant straps A-frame1 to main boom head 2316, page 1461)

Generation A of main boom pendant strap 12 m (40 ft)

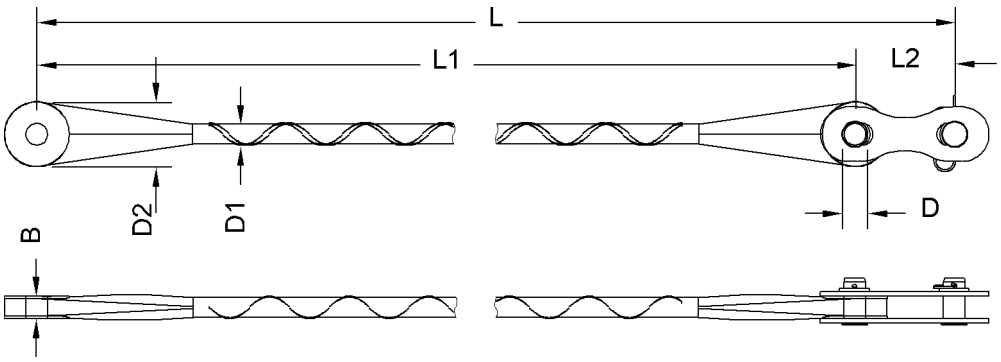

Fig. 212: Dimensions main boom pendant strap 12 m (40 ft)

LWN/LR.x/V03.01//Auslieferung/2015-06-03/en

copyright by LIEBHERR

Name		Value
L	Length	12000 mm 39‘ 4“ ft-in
L1	Length of pendant strap	11700 mm 38‘ 5“ ft-in
L2	Length of connecting link	300 mm 1‘ ft-in
W	Width	66 mm 2.60“ in
D	Pin Ø	65 mm 2.56“ in
D1	Pendant strap Ø	60 mm 2.36“ in
D2	Pendant strap Ø	196 mm 7.72“ in
Weight		85 kg 187 lb

Tab. 125: Technical data main boom pendant strap 12 m (40 ft)

Generation B of main boom pendant strap 12 m (40 ft)

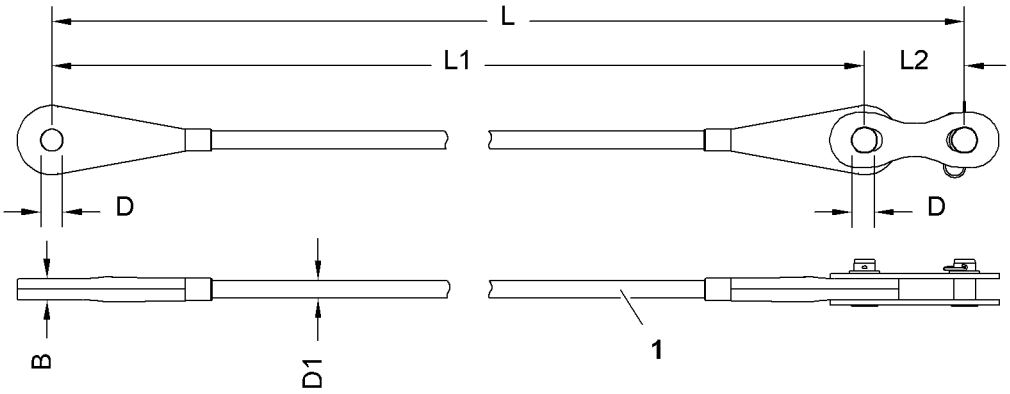

Fig. 213: Dimensions main boom pendant strap 12 m (40 ft)

1 Wire mesh hose as protective sheath

Name		Value
L	Length	12000 mm 39‘ 4“ ft-in
L1	Length of pendant strap	11700 mm 38‘ 5“ ft-in
L2	Length of connecting link	300 mm 1‘ ft-in
W	Width	63 mm 2.48“ in
D	Pin Ø	65 mm 2.56“ in

LWN/LR.x/V03.01//Auslieferung/2015-06-03/en

copyright by
LIEBHERR

Name		Value
D1	Pendant strap Ø	52 mm 2.05“ in
Weight		85 kg 187 lb

Tab. 126: Technical data main boom pendant strap 12 m (40 ft)

Jib backstay strap 12 m (40 ft)

Installation site in crane operation:
- Fixed jib 1507 (For more information see: Jib backstay straps A-frame2 to main boom base section 2821, page 1499)
- Luffing jib 2316 (For more information see: Jib backstay straps A-frame2 to main boom base section 2821, page 1577)
- Luffing jib 1916 (For more information see: Jib backstay straps A-frame2 to main boom base section 2821, page 1596)
- Luffing jib 2316 + midfall 2316 (For more information see: Jib backstay straps A-frame2 to main boom base section 2821, page 1674)
- Luffing jib 1916 + midfall 1916 (For more information see: Jib backstay straps A-frame2 to main boom base section 2821, page 1687)

Generation A of jib backstay strap 12 m (40 ft)

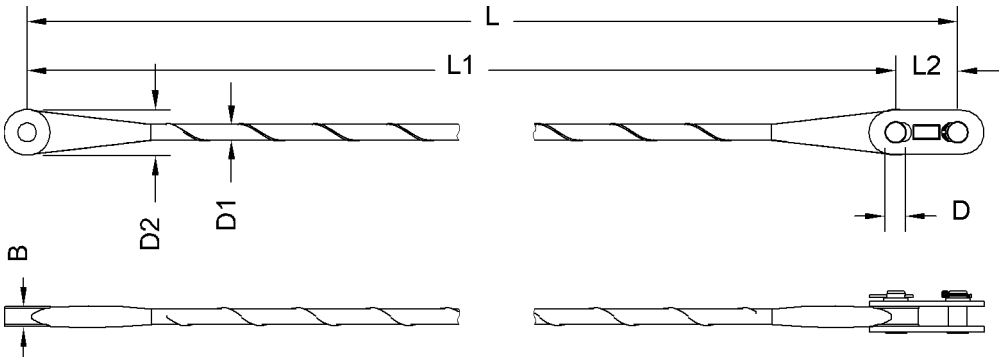

Fig. 214: Dimensions jib backstay strap 12 m (40 ft)

Name		Value
L	Length	12000 mm 39‘ 4“ ft-in
L1	Length of pendant strap	11800 mm 38‘ 9“ ft-in
L2	Length of connecting link	200 mm 7.87“ in
W	Width	64 mm 2.52“ in
D	Pin Ø	60 mm 2.36“ in
D1	Pendant strap Ø	50 mm 1.97“ in

LWN/LR.x/V03.01//Auslieferung/2015-06-03/en

copyright by
LIEBHERR

Name		Value
D2	Pendant strap Ø	148 mm 5.83“ in
Weight		60 kg 132 lb

Tab. 127: Technical data jib backstay strap 12 m (40 ft)

Generation B of jib backstay strap 12 m (40 ft)

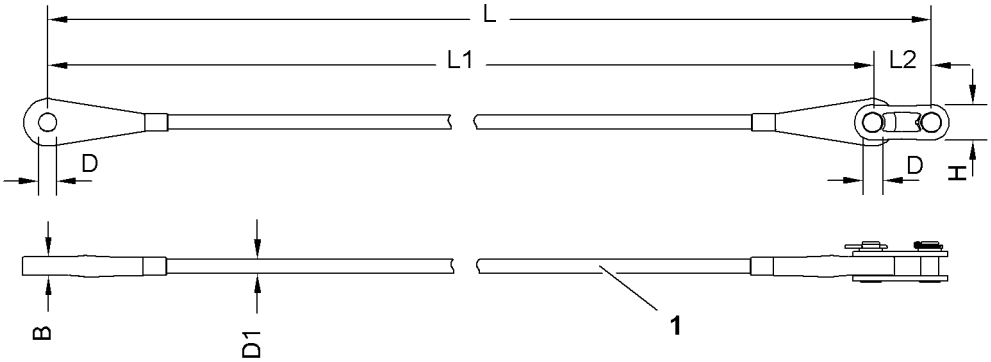

Fig. 215: Dimensions jib backstay strap 12 m (40 ft)

1 Wire mesh hose as protective sheath

Name		Value
L	Length	12000 mm 39‘ 4“ ft-in
L1	Length of pendant strap	11800 mm 38‘ 9“ ft-in
L2	Length of connecting link	200 mm 7.87“ in
W	Width	63 mm 2.48“ in
H	Height of connecting link	121 mm 4.76“ in
D	Pin Ø	60 mm 2.36“ in
D1	Pendant strap Ø	48 mm 1.89“ in
Weight		43 kg 94.80 lb

Tab. 128: Technical data jib backstay strap 12 m (40 ft)

LWN/LR.x/V03.01//Auslieferung/2015-06-03/en

copyright by
LIEBHERR

CF pendant straps on main boom head 2821.24

Main boom pendant strap on main boom head 2821.24

Installation site in crane operation:
– Main boom 2821 (For more information see: Pendant straps A-frame1 to main boom head 2821, page 1234)
– Main boom 2821 + derrick boom 2220 (For more information see: 2821 main boom head to 2220 derrick boom head pendant straps, page 1320)

Generation A of main boom pendant strap on main boom head 2821.24

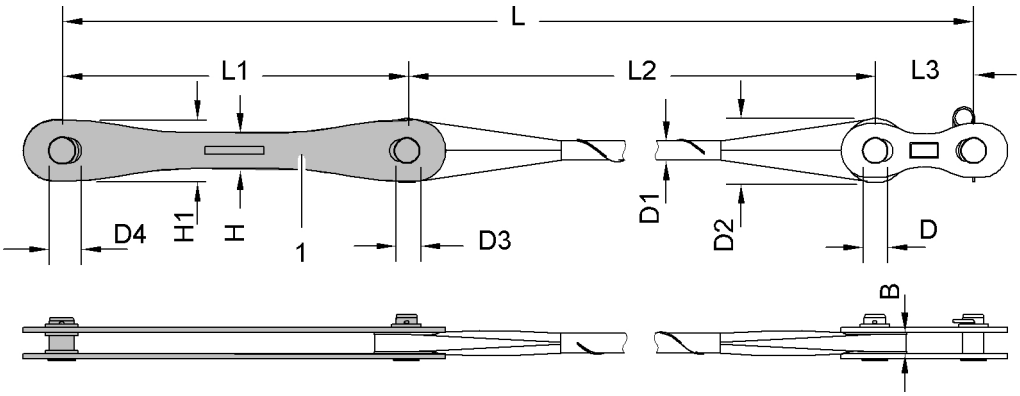

Fig. 216: Dimensions of main boom pendant strap on main boom head 2821.24

1 Connecting link (2x)

Note

If the machine is equipped with a derrick boom:
▶ Replace connecting links **1** on main boom head 2821.24 with connecting links with tension load cell (For more information see: Connecting links with tension load cell, page 214) .

Name		Value
L	Length	6300 mm 20‘ 8“ ft-in
L1	Length of connecting link	1050 mm 3‘ 5“ ft-in
L2	Length of pendant strap	4950 mm 16‘ 3“ ft-in
L3	Length of connecting link	300 mm 1‘ ft-in
W	Width of pendant strap	66 mm 2.60“ in
H	Height of connecting link	110 mm 4.33“ in
H1	Height of connecting link	185 mm 7.28“ in
D	Pin Ø	65 mm 2.56“ in

LWN/LR.x/V03.01//Auslieferung/2015-06-03/en

copyright by
LIEBHERR

Name		Value
D1	Pendant strap Ø	66 mm 2.60“ in
D2	Pendant strap Ø	195 mm 7.68“ in
D3	Pin Ø	65 mm 2.56“ in
D4	Pin Ø	75 mm 2.95“ in
Weight		109 kg 240 lb

Tab. 129: Technical data main boom pendant strap on main boom head 2821.24

Generation B of main boom pendant strap on main boom head 2821.24

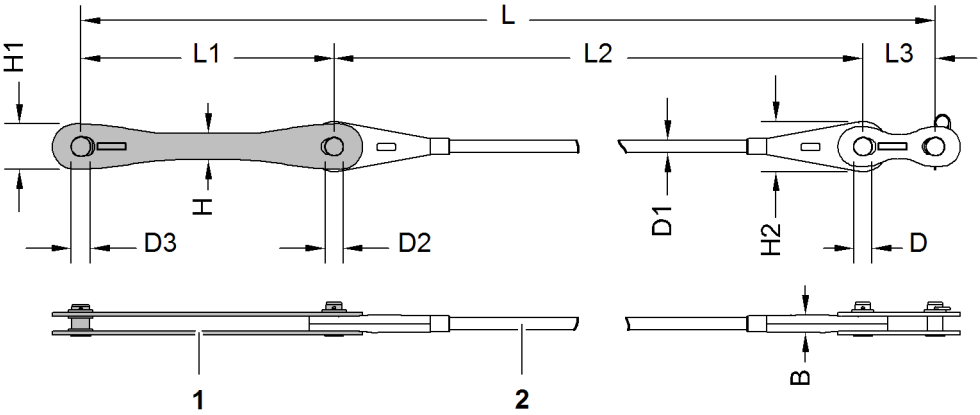

Fig. 217: Dimensions of main boom pendant strap on main boom head 2821.24

1 Connecting link (2x)

2 Wire mesh hose as protective sheath

Note

If the machine is equipped with a derrick boom:

▶ Replace connecting links **1** on main boom head 2821.24 with connecting links with tension load cell (For more information see: Connecting links with tension load cell, page 214) .

Name		Value
L	Length	6300 mm 20‘ 8“ ft-in
L1	Length of connecting link	1050 mm 3‘ 5“ ft-in
L2	Length of pendant strap	4950 mm 16‘ 3“ ft-in
L3	Length of connecting link	300 mm 1‘ ft-in

LWN/LR.x/V03.01//Auslieferung/2015-06-03/en

copyright by
LIEBHERR

Name		Value
B	Width of pendant strap	63 mm 2.48“ in
H	Height of connecting link	110 mm 4.33“ in
H1	Height of connecting link	187 mm 7.36“ in
H2	Height of pendant strap	207 mm 8.15“ in
D	Pin Ø	65 mm 2.56“ in
D1	Pendant strap Ø	52 mm 2.05“ in
D2	Pin Ø	65 mm 2.56“ in
D3	Pin Ø	75 mm 2.95“ in
Weight		108 kg 238 lb

Tab. 130: Technical data main boom pendant strap on main boom head 2821.24

Additional pendant straps/connecting links/tension load cells

Connecting links with tension load cell

Installation site in crane mode:
– Main boom 2821 + derrick boom 2220 (For more information see: 2821 main boom head to 2220 derrick boom head pendant straps, page 1320)

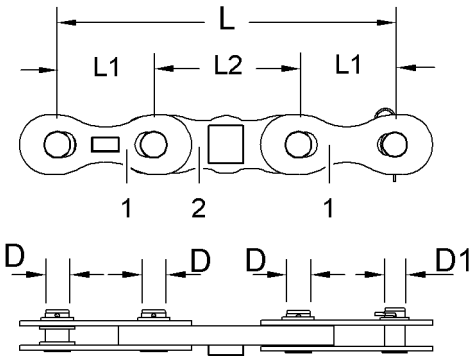

Fig. 218: Dimensions connecting links with tension load cell

1 Connecting links **2** Tension load cell

Name		Value
L	Length	1050 mm 3‘ 5“ ft-in

LWN/LR.x/V03.01/Auslieferung/2015-06-03/en

Name		Value
L1	Length of connecting link	300 mm 1‘ ft-in
L2	Length of tension load cell	450 mm 1‘ 6“ ft-in
D	Pin Ø	75 mm 2.95“ in
D1	Pin Ø	65 mm 2.56“ in
Weight		75 kg 165 lb

Tab. 131: Technical data connecting links with tension load cell

Connecting links

Installation site in crane mode:
– Main boom 2821 + derrick boom 2220 (For more information see: 2821 main boom head to 2220 derrick boom head pendant straps, page 1320)

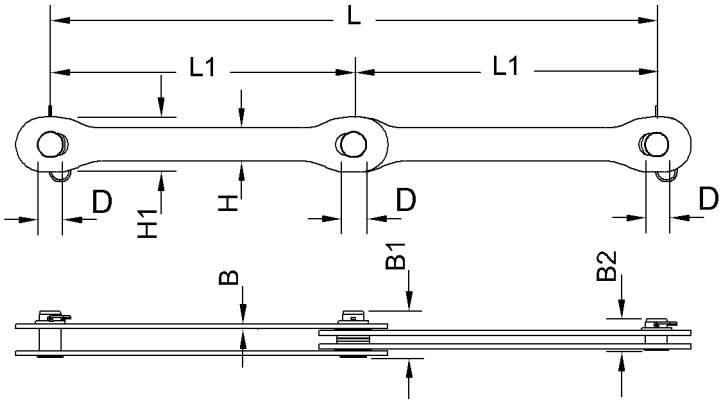

Fig. 219: Dimensions connecting links

Name		Value
L	Length	1825 mm 6‘ ft-in
L1	Length of connecting link	912.5 mm 3‘ ft-in
B	Width of connecting link	15 mm 0.59“ in
B1	Length of pin	140 mm 5.51“ in
B2	Length of pin	95 mm 3.74“ in
H	Height of pendant strap	100 mm 3.94“ in
H1	Height of pendant strap	165 mm 6.50“ in

copyright by
LIEBHERR

Name		Value
D	Pin Ø	65 mm 2.56“ in
Weight		53 kg 117 lb

Tab. 132: Technical data connecting links

LWN/LR.x/V03.01//Auslieferung/2015-06-03/en

copyright by
LIEBHERR

1.12 Reducing piece overview

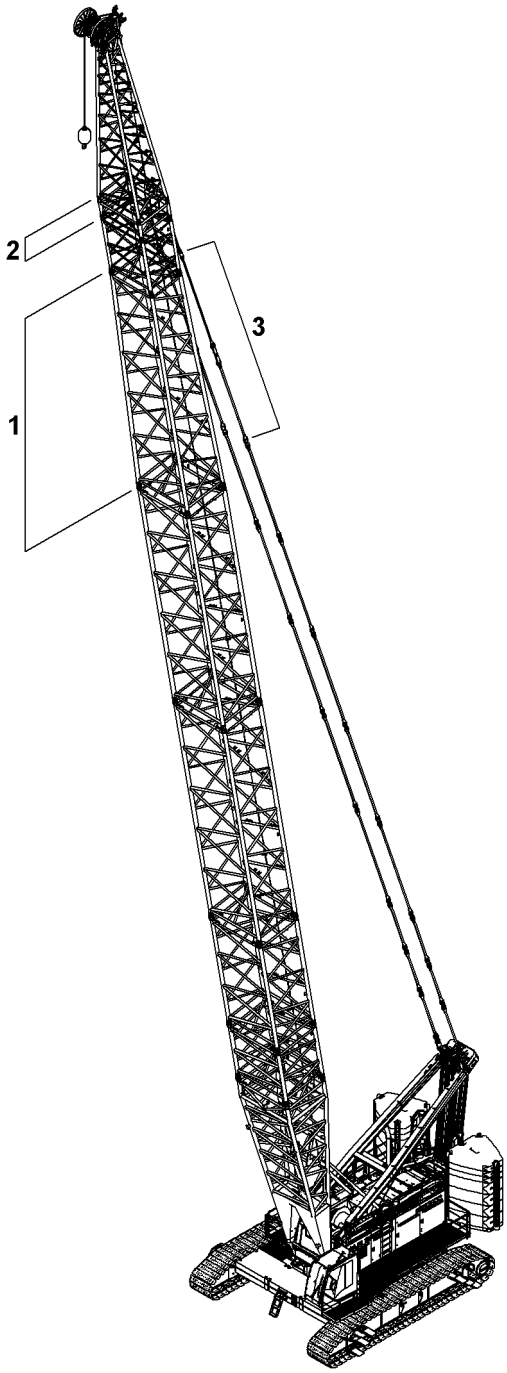

Fig. 220: Reducing adapter overview

1 Reducing adapter
2 Main boom section
3 Reducing adapter pendant strap

LWN/LR.x/V03.01//Auslieferung/2015-06-03/en

copyright by
LIEBHERR

1.13 2821/2316 reducing piece

1.13.1 2821/2316.24 reducing piece 12 m (40 ft)

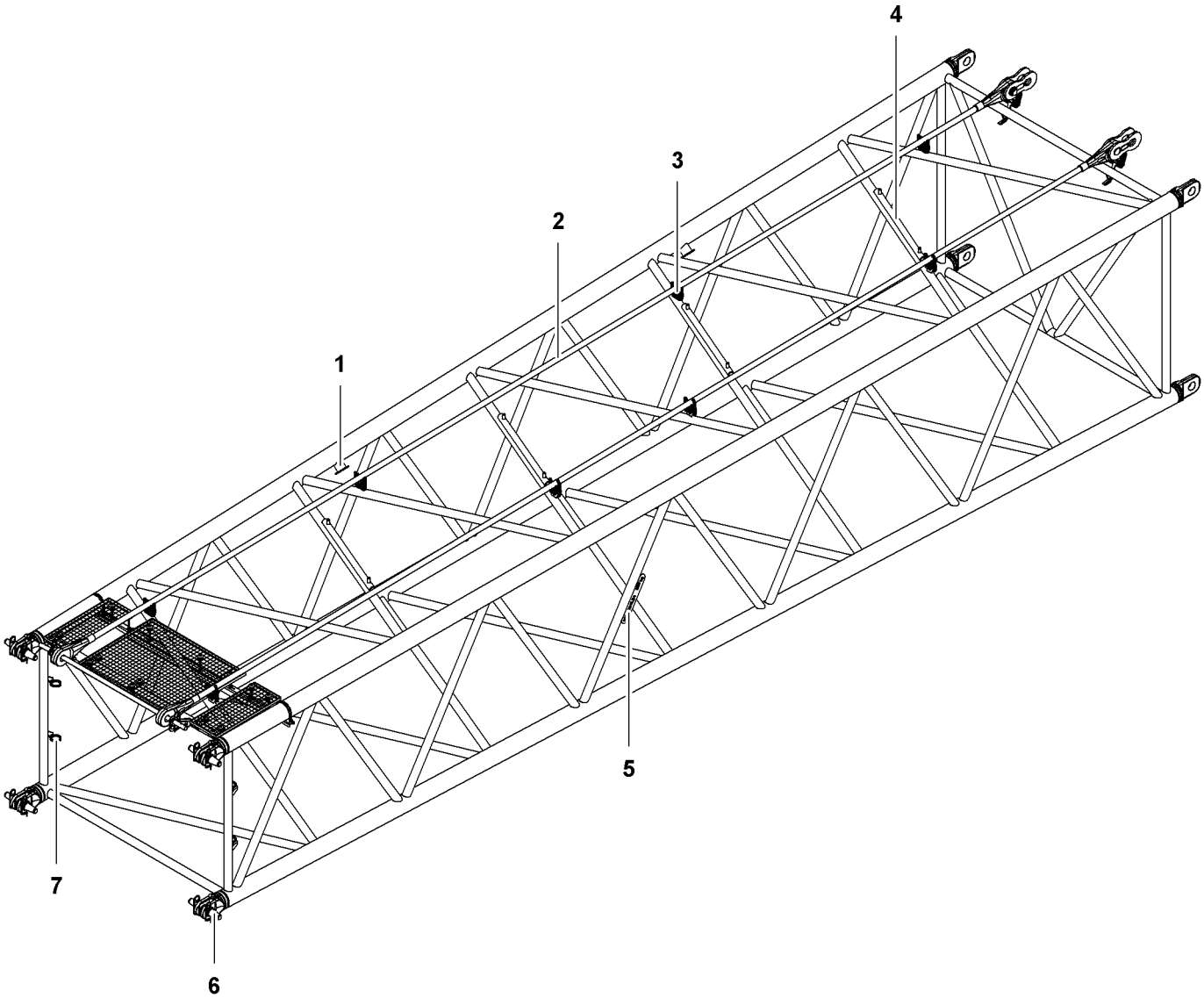

Fig. 221: Reducing adapter 2821/2316.24 12 m (40 ft)

1 Rigging point (4x)

2 Transport position of reducing adapter pendant straps 12 m (40 ft)

3 Transport bracket (6x) for pendant straps

4 Rope protection guard (6x)

5 Boom identification plate

6 Pin connection point (8x) with double-taper pin (4x)

7 Transport bracket (4x) for double taper pin

LWN/LR.x/V03.01//Auslieferung/2015-06-03/en

copyright by LIEBHERR

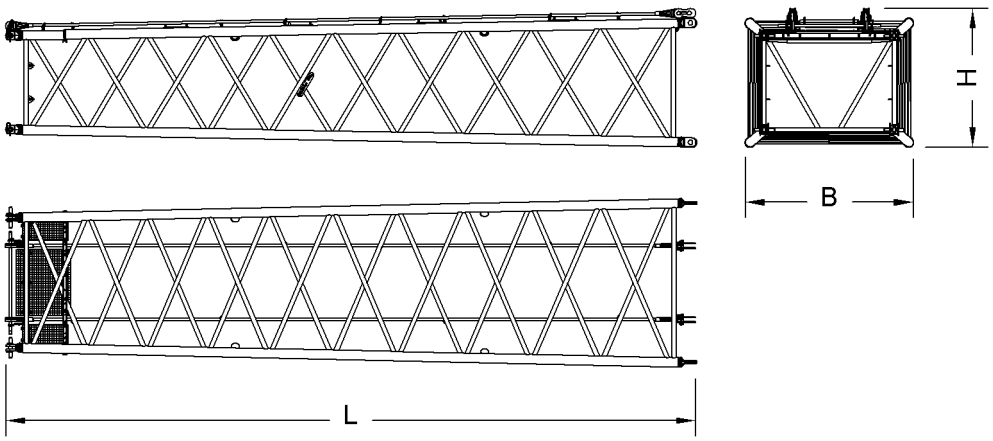

Fig. 222: Dimensions reducing adapter 2821/2316.24 12 m (40 ft)

Name		Value
System length		12000 mm 39‘ 4“ ft-in
System width		2800 mm (9‘ 2“ ft-in)/ 2290 mm (7‘ 6“ ft-in)
System height		2100 mm (6‘ 11“ ft-in)/ 1650 mm (5‘ 5“ ft-in)
L	Length	12180 mm 40‘ ft-in
B	Width	2970 mm 9‘ 9“ ft-in
H	Height (incl. pendant straps)	2470 mm 8‘ 1“ ft-in
Weight (incl. pendant straps)		3630 kg 8,003 lb
Double-taper pins Ø		80 mm (3.15“ in)/ 65 mm (2.56“ in)

Tab. 133: 2821/2316.24 reducing piece technical data 12 m (40 ft)

LWN/LR.x/V03.01//Auslieferung/2015-06-03/en

copyright by
LIEBHERR

1.13.2 Main boom section 2316.25 1 m (3 ft)

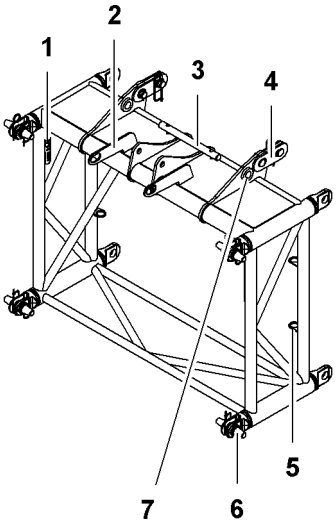

Fig. 223: Main boom section 2316.25 1 m (3 ft)

1 Boom identification plate

2 Link plate (2x) for main boom pendant straps

3 Rope protection support

4 Connecting link (2x) for main boom pendant straps

5 Transport bracket (4x) for double-taper pins

6 Pin connection point (8x) with double-taper pins (4x)

7 Pin connection point for CF pendant straps

Machine with steel pendant straps: Connecting links **4** have a length of 200 mm (7.87“ in) and a pin diameter of 55 mm (2.17“ in).

Machine with CF pendant straps: Connecting links **4** have a length of 350 mm (1‘ 2“ ft-in) and a pin diameter of 60 mm (2.36“ in). The connecting links must be pinned to the pin connection point **7**.

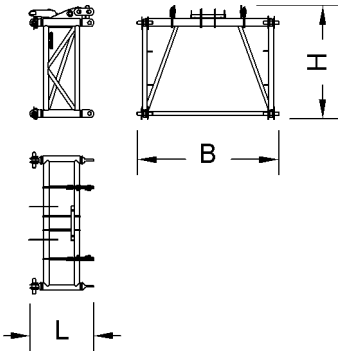

Fig. 224: Dimensions main boom section 2316.25 1 m (3 ft)

Name	Value
System length	1000 mm 3‘ 3“ ft-in
System width	2290 mm 7‘ 6“ ft-in

LWN/LR.x/V03.01//Auslieferung/2015-06-03/en

copyright by
LIEBHERR

Name		Value
System height		1650 mm 5‘ 5“ ft-in
L	Length	1150 mm 3‘ 9“ ft-in
W	Width	2430 mm 8‘ ft-in
H	Height	2010 mm 6‘ 7“ ft-in
Weight		642 kg 1,415 lb
Double-taper pins Ø		65 mm 2.56“ in

Tab. 134: Technical data main boom section 2316.25 1 m (3 ft)

1.13.3 Mid-point suspension on reducing adapter 2821/2316

The mid-point suspensions on reducing adapter 2821/2316 differ with steel pendant straps and CF pendant straps.

LWN/LR.x/V03.01//Auslieferung/2015-06-03/en

copyright by
LIEBHERR

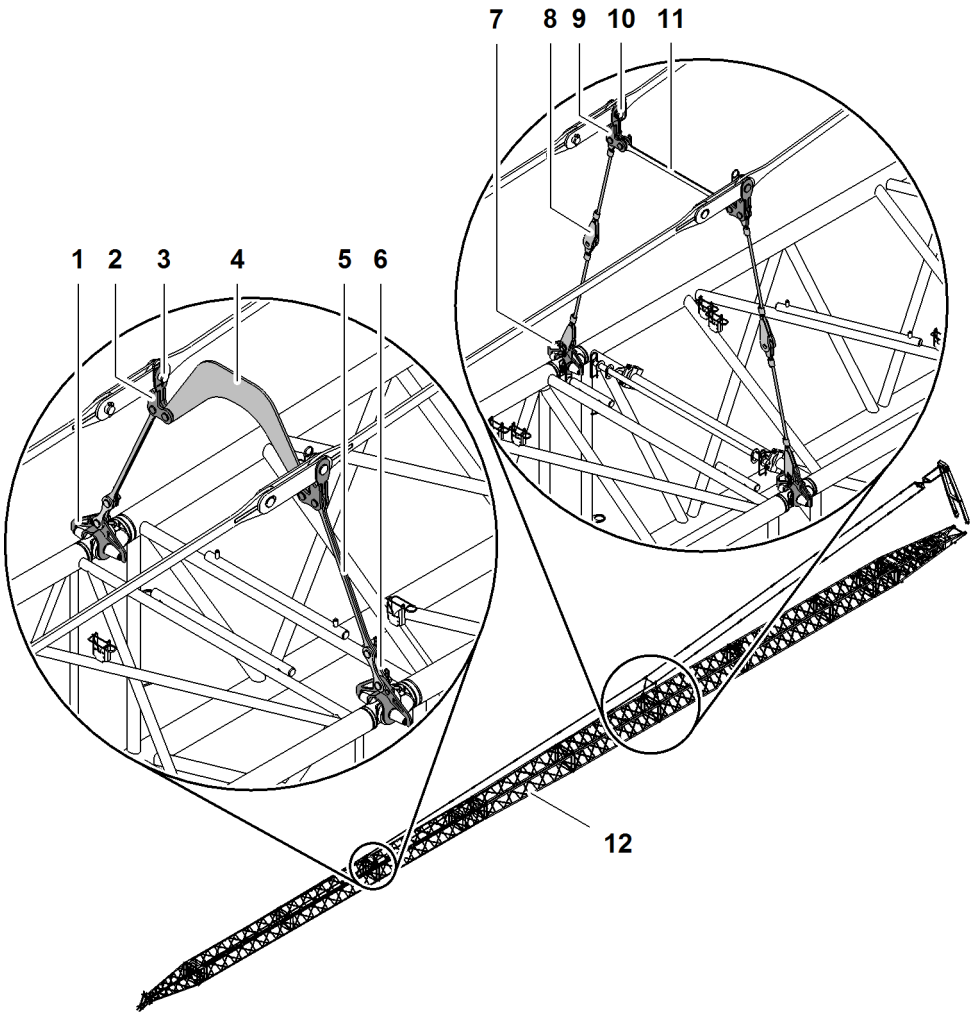

Fig. 225: Mid-point suspension on reducing adapter 2821/2316 (illustration of principle)

1	Fork (2x) behind reducing adapter	**7**	Fork (2x) in front of reducing adapter
2	Connecting element (2x) behind reducing adapter	**8**	Stay ropes
3	Pin (2x) for pendant straps behind reducing adapter	**9**	Connecting element (2x) in front of reducing adapter
4	Spacer bracket behind reducing adapter	**10**	Pin (2x) for pendant straps in front of reducing adapter
5	Top backstay shackles	**11**	Spacer bracket in front of reducing adapter
6	Bottom backstay shackles	**12**	Reducing adapter

LWN/LR.x/V03.01//Auslieferung/2015-06-03/en

copyright by
LIEBHERR

Connecting elements for steel pendant straps in front of reducing adapter

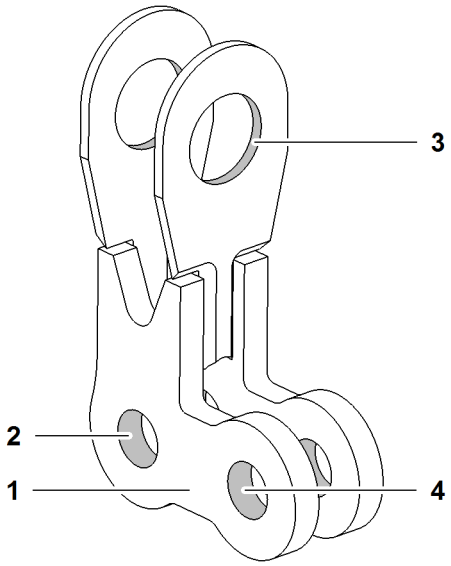

Fig. 226: Connecting elements for steel pendant straps in front of reducing adapter (illustration of principle)

1	Connecting element	**3**	Pin connection point for pendant strap
2	Pin connection point for stay rope	**4**	Pin connection point for spacer bracket

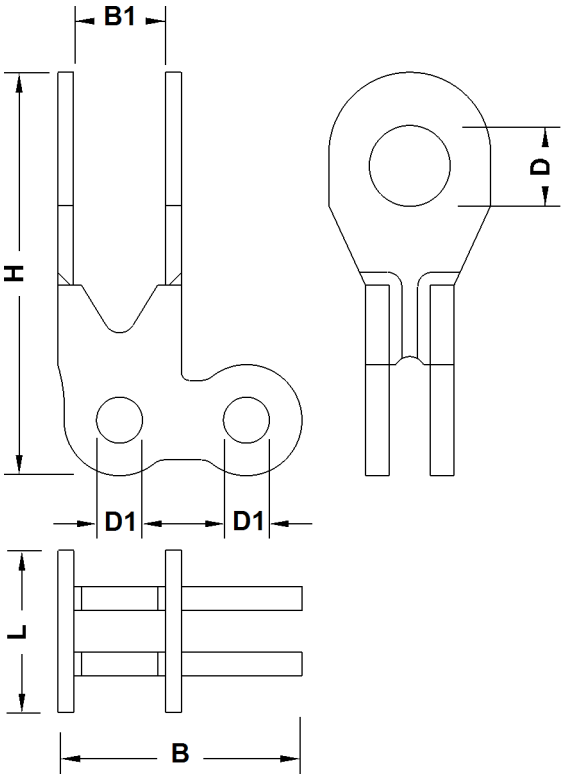

Fig. 227: Dimensions connecting elements for steel pendant straps in front of reducing adapter

LWN/LR.x/V03.01//Auslieferung/2015-06-03/en

copyright by
LIEBHERR

Name		Value
L	Length	112 mm 4.41“ in
H	Height	361 mm 1‘ 2“ ft-in
B	Width	190 mm 7.48“ in
B1	Width between links	58 mm 2.28“ in
D	Pin Ø	65 mm 2.56“ in
D1	Pin Ø	35 mm 1.38“ in

Tab. 135: Technical data connecting elements for steel pendant straps in front of reducing adapter

Connecting elements for CF pendant straps in front of reducing adapter

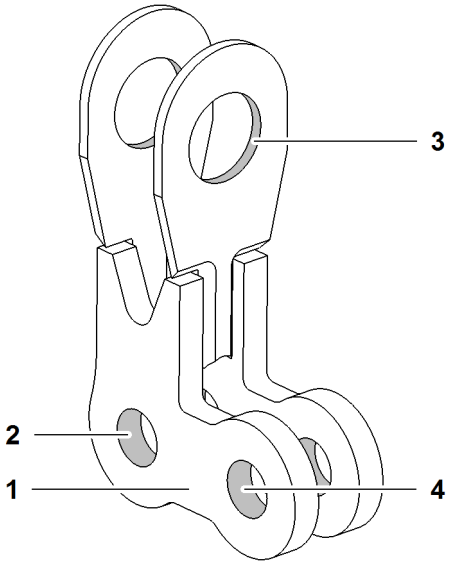

Fig. 228: Connecting elements for CF pendant straps in front of reducing adapter (illustration of principle)

1 Connecting element

2 Pin connection point for stay rope

3 Pin connection point for pendant strap

4 Pin connection point for spacer bracket

LWN/LR.x/V03.01//Auslieferung/2015-06-03/en

copyright by
LIEBHERR

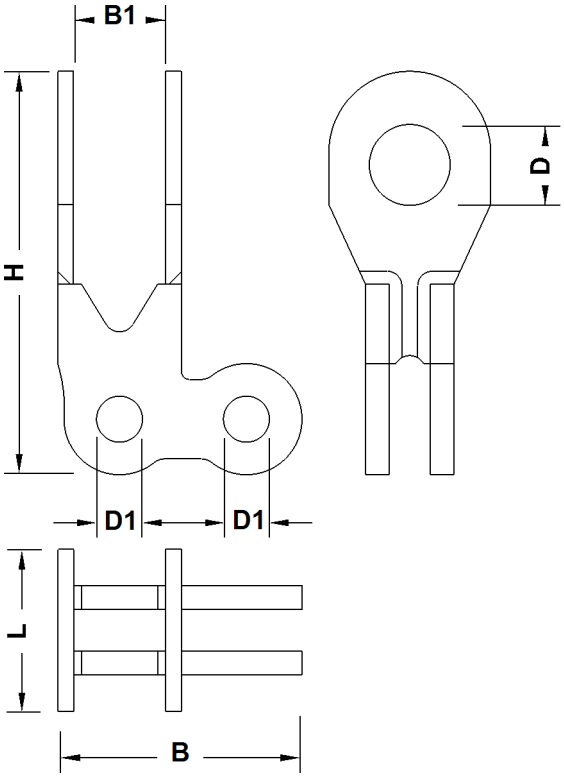

Fig. 229: Dimensions connecting elements for CF pendant straps in front of reducing adapter

Name		Value
L	Length	110 mm 4.33“ in
H	Height	358 mm 1‘ 2“ ft-in
B	Width	207 mm 8.15“ in
B1	Width between links	104 mm 4.09“ in
D	Pin Ø	65 mm 2.56“ in
D1	Pin Ø	35 mm 1.38“ in

Tab. 136: Technical data connecting elements for CF pendant straps in front of reducing adapter

LWN/LR.x/V03.01//Auslieferung/2015-06-03/en

copyright by
LIEBHERR

Connecting elements for steel pendant straps behind reducing adapter

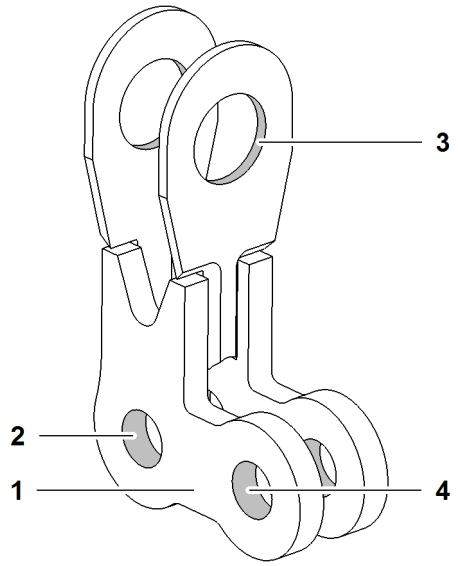

Fig. 230: Connecting elements for steel pendant straps behind reducing adapter (illustration of principle)

1	Connecting element	**3**	Pin connection point for pendant strap
2	Pin connection point for stay rope	**4**	Pin connection point for spacer bracket

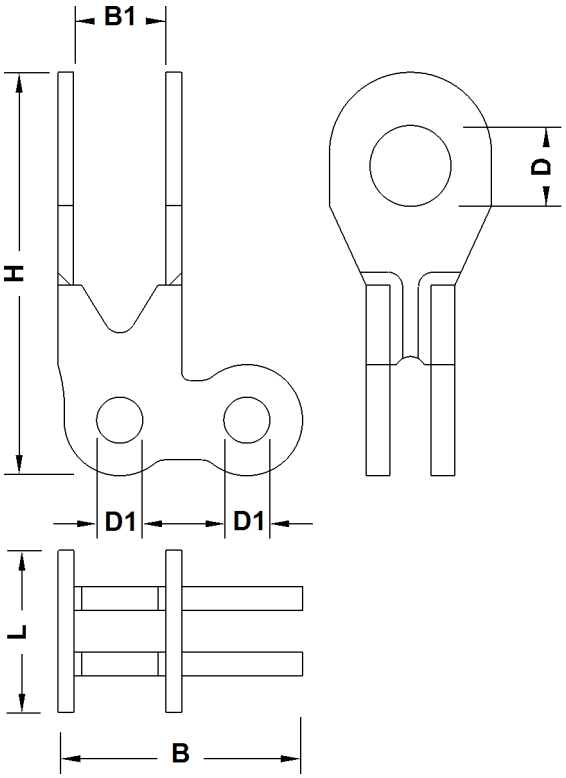

Fig. 231: Dimensions connecting elements for steel pendant straps behind reducing adapter

LWN/LR.x/V03.01//Auslieferung/2015-06-03/en

Name		Value
L	Length	102 mm 4.02“ in
H	Height	354 mm 1‘ 2“ ft-in
B	Width	190 mm 7.48“ in
B1	Width between links	58 mm 2.28“ in
D	Pin Ø	55 mm 2.17“ in
D1	Pin Ø	35 mm 1.38“ in

Tab. 137: Technical data connecting elements for steel pendant straps behind reducing adapter

Connecting elements for CF pendant straps behind reducing adapter

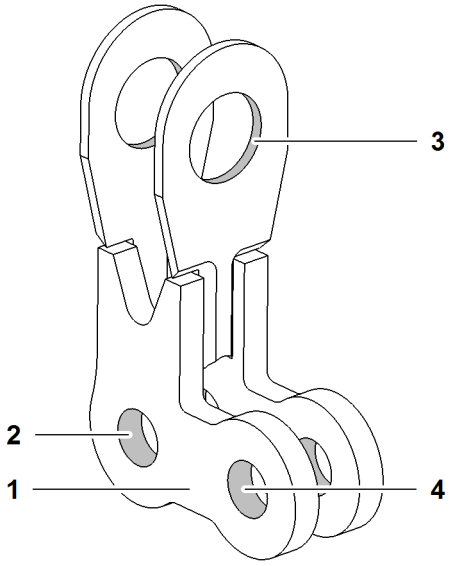

Fig. 232: Connecting elements for CF pendant straps behind reducing adapter (illustration of principle)

1 Connecting element

2 Pin connection point for stay rope

3 Pin connection point for pendant strap

4 Pin connection point for spacer bracket

LWN/LR.x/V03.01//Auslieferung/2015-06-03/en

copyright by
LIEBHERR

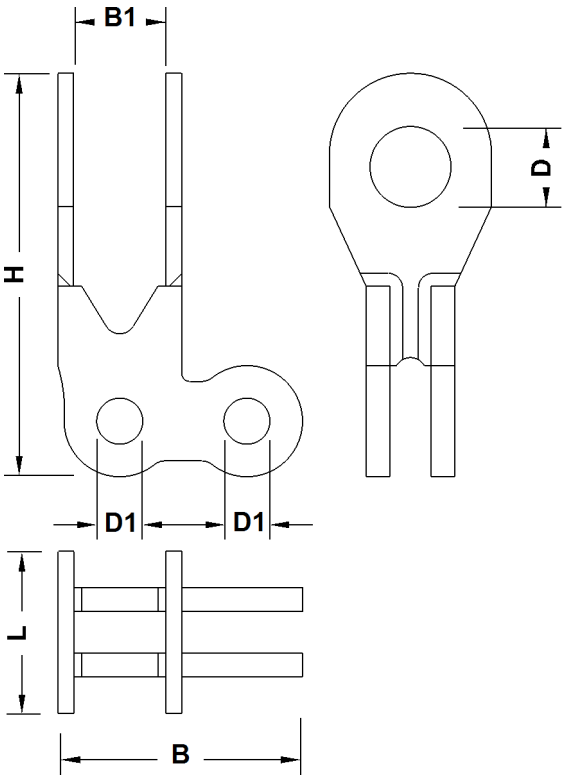

Fig. 233: Dimensions connecting elements for CF pendant straps behind reducing adapter

Name		Value
L	Length	110 mm 4.33“ in
H	Height	358 mm 1‘ 2“ ft-in
B	Width	207 mm 8.15“ in
B1	Width between links	104 mm 4.09“ in
D	Pin Ø	60 mm 2.36“ in
D1	Pin Ø	35 mm 1.38“ in

Tab. 138: Technical data connecting elements for CF pendant straps behind reducing adapter

LWN/LR.x/V03.01//Auslieferung/2015-06-03/en

copyright by
LIEBHERR

Forks in front of reducing adapter

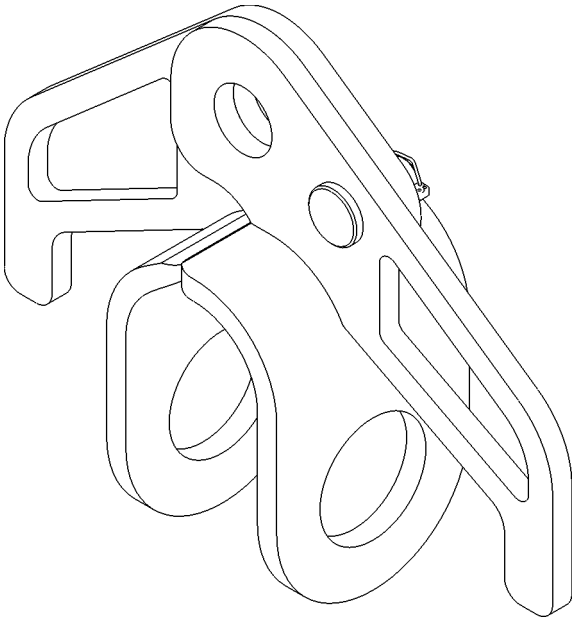

Fig. 234: Forks in front of reducing adapter (illustration of principle)

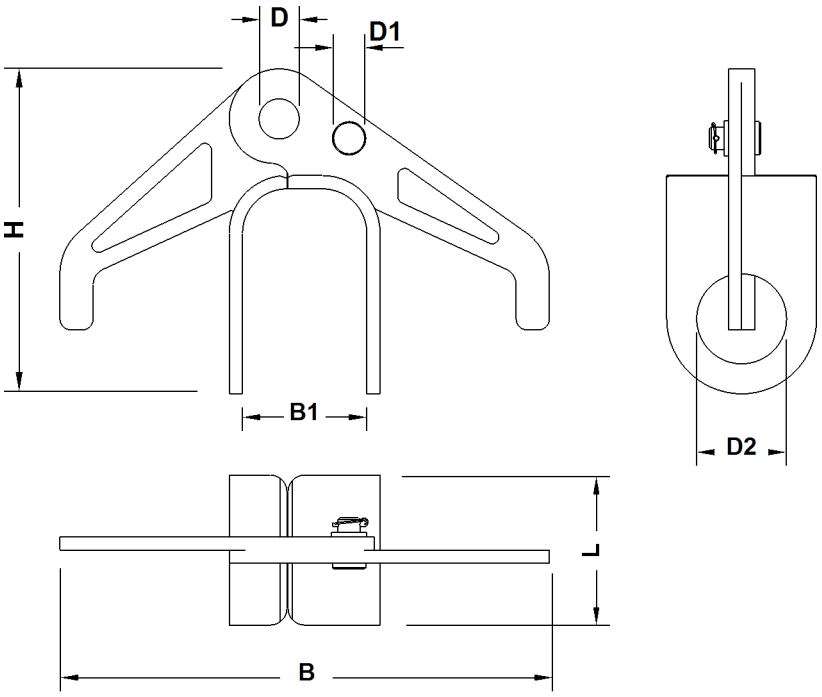

Fig. 235: Dimensions forks in front of reducing adapter

Name		Value
L	Length of fork	135 mm 5.31“ in
B	Width	441 mm 1‘ 5“ ft-in

LWN/LR.x/V03.01//Auslieferung/2015-06-03/en

copyright by
LIEBHERR

Name		Value
B1	Width of fork	112 mm 4.41“ in
H	Height	293 mm 1‘ ft-in
D	Pin Ø	35 mm 1.38“ in
D1	Pin Ø	20 mm 0.79“ in
D2	Pin Ø	80 mm 3.15“ in

Tab. 139: Technical data forks in front of reducing adapter

Forks behind reducing adapter

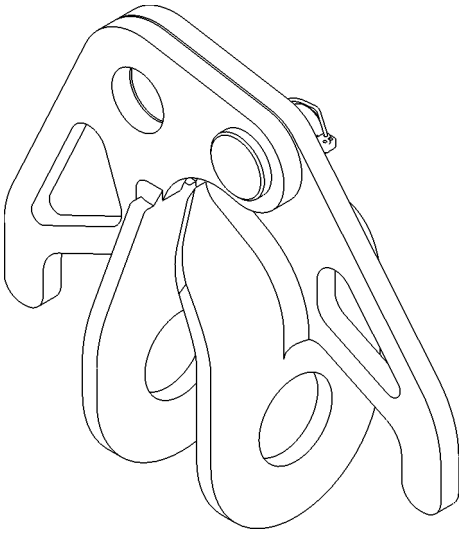

Fig. 236: Forks behind reducing adapter (illustration of principle)

LWN/LR.x/V03.01//Auslieferung/2015-06-03/en

copyright by
LIEBHERR

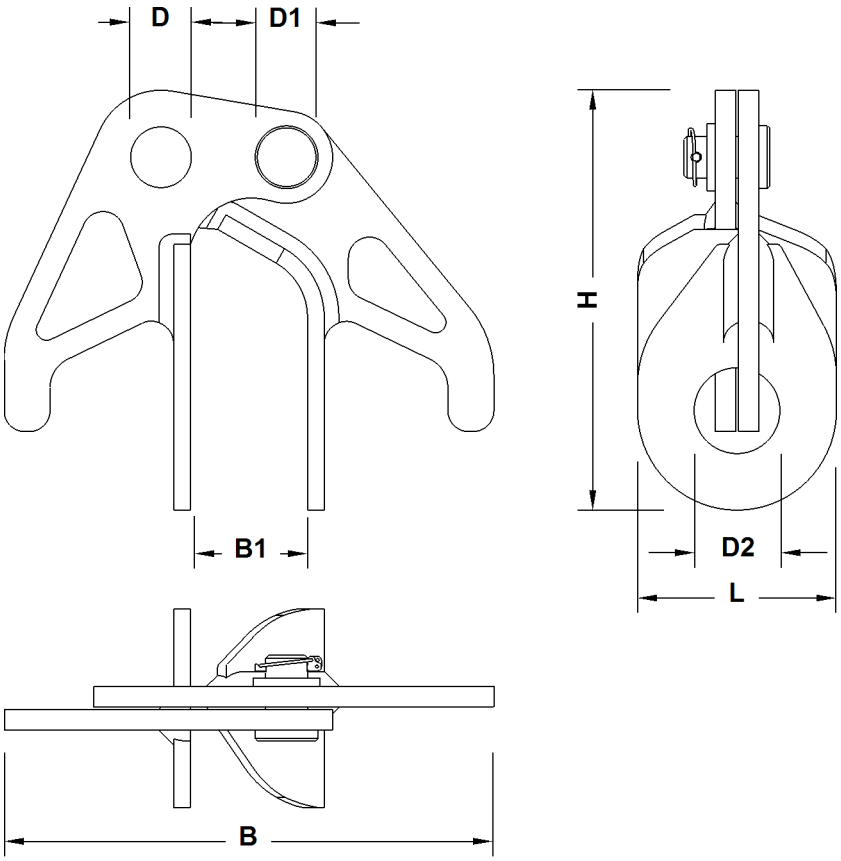

Fig. 237: Dimensions forks behind reducing adapter

Name		Value
L	Length of fork	120 mm 4.72“ in
B	Width	354 mm 1‘ 2“ ft-in
B1	Width of fork	82 mm 3.23“ in
H	Height	270 mm 10.63“ in
D	Pin Ø	35 mm 1.38“ in
D1	Pin Ø	20 mm 0.79“ in
D2	Pin Ø	65 mm 2.56“ in

Tab. 140: Technical data forks behind reducing adapter

LWN/LR.x/V03.01//Auslieferung/2015-06-03/en

copyright by
LIEBHERR

Spacer bracket in front of reducing adapter

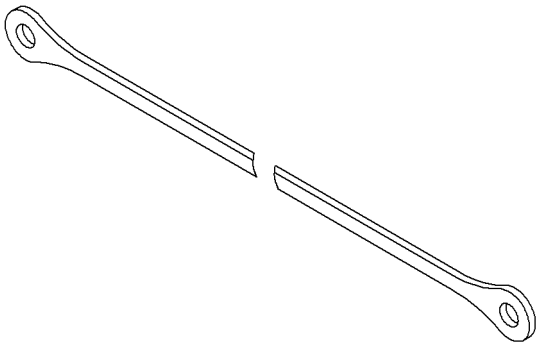

Fig. 238: Spacer bracket in front of reducing adapter (illustration of principle)

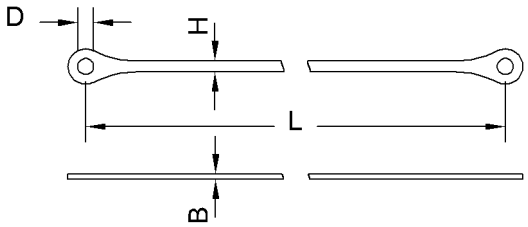

Fig. 239: Dimensions spacer bracket in front of reducing adapter

Name		Value
L	Length	1100 mm 3‘ 7“ ft-in
B	Width	10 mm 0.39“ in
H	Height	40 mm 1.57“ in
D	Pin Ø	35 mm 1.38“ in

Tab. 141: Technical data spacer bracket in front of reducing adapter

LWN/LR.x/V03.01//Auslieferung/2015-06-03/en

copyright by
LIEBHERR

Spacer bracket behind reducing adapter

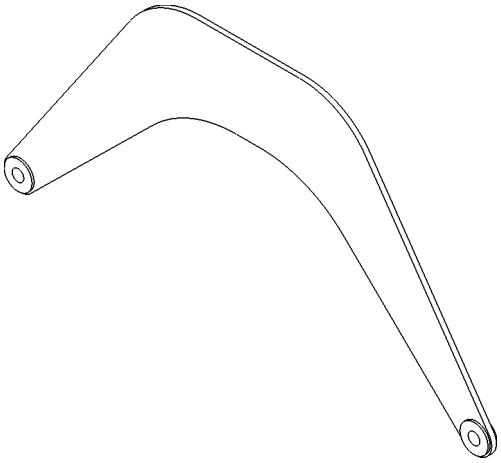

Fig. 240: Spacer bracket behind reducing adapter (illustration of principle)

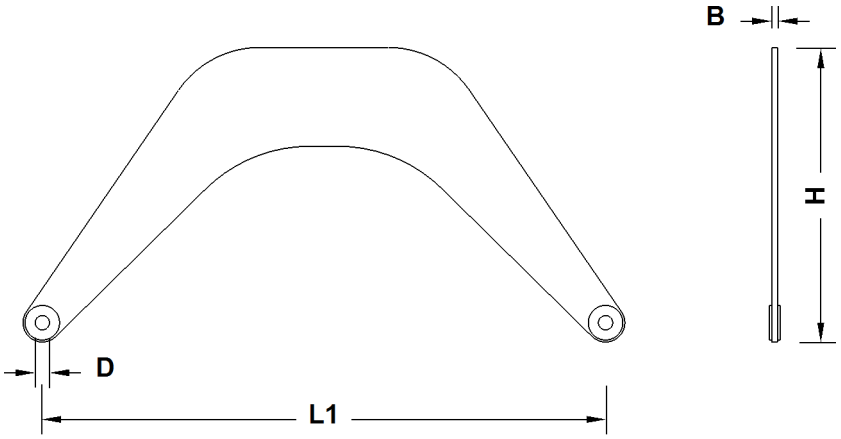

Fig. 241: Dimensions spacer bracket behind reducing adapter

Name		Value
L1	Length	1100 mm 3‘ 7“ ft-in
B	Width	15 mm 0.59“ in
H	Height	602 mm 2‘ ft-in
D	Pin Ø	35 mm 1.38“ in

Tab. 142: Technical data spacer bracket behind reducing adapter

LWN/LR.x/V03.01//Auslieferung/2015-06-03/en

copyright by
LIEBHERR

Backstay shackles

Top backstay shackle

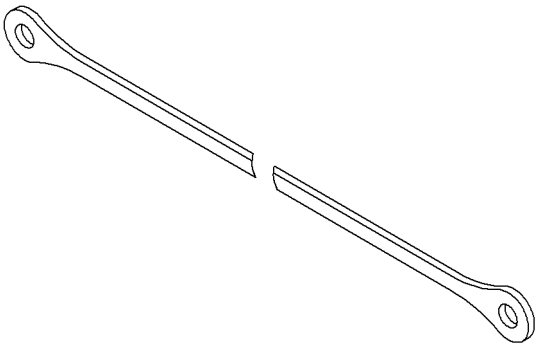

Fig. 242: Top backstay shackle (illustration of principle)

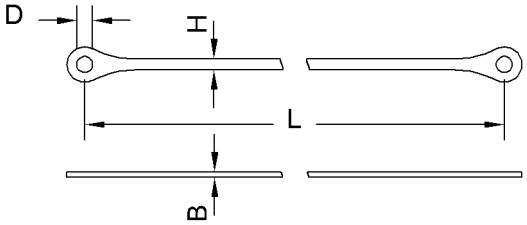

Fig. 243: Dimensions top backstay shackle

Name		Value
L	Length	420 mm 1‘ 5“ ft-in
		540 mm 1‘ 9“ ft-in
		730 mm 2‘ 5“ ft-in
		950 mm 3‘ 1“ ft-in
B	Width	12 mm 0.47“ in
H	Height	80 mm 3.15“ in
D	Pin Ø	35 mm 1.38“ in

Tab. 143: Technical data top backstay shackle

LWN/LR.x/V03.01//Auslieferung/2015-06-03/en

copyright by
LIEBHERR

Bottom backstay shackle

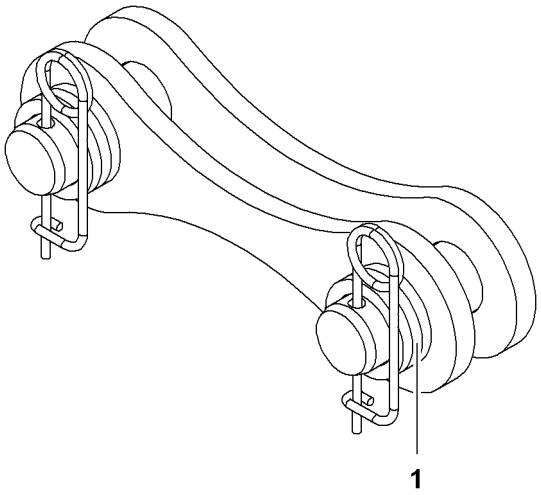

Fig. 244: Bottom backstay shackle (illustration of principle)

1 Washer (3x each)

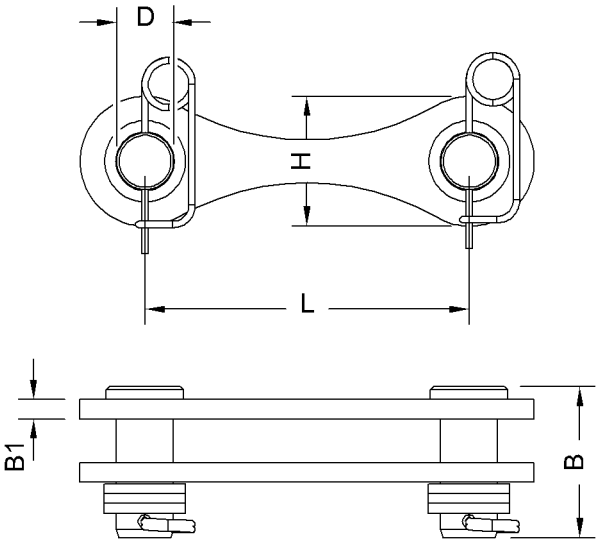

Fig. 245: Dimensions bottom backstay shackle

Name		Value
L	Length	200 mm 7.87“ in
B1	Width	12 mm 0.47“ in
H	Height	80 mm 3.15“ in
B	Length of pin	90 mm 3.54“ in
D	Pin Ø	35 mm 1.38“ in

Tab. 144: Technical data bottom backstay shackle

LWN/LR.x/V03.01//Auslieferung/2015-06-03/en

copyright by
LIEBHERR

Stay ropes

Several stay ropes are assembled to achieve defined rope lengths.

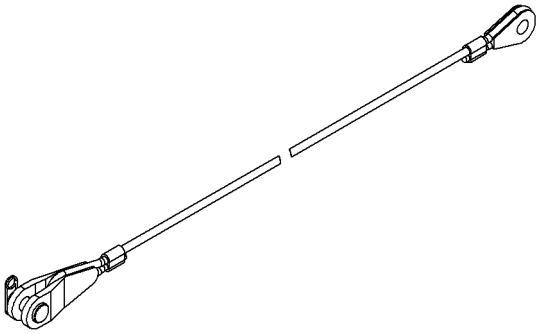

Fig. 246: Stay ropes (illustration of principle)

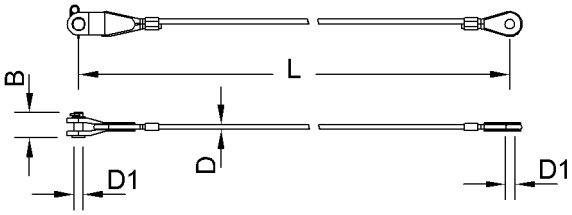

Fig. 247: Dimensions stay ropes

Name		Value
L	Length of stay rope	1100 mm 3‘ 7“ ft-in
		1300 mm 4‘ 3“ ft-in
		1600 mm 5‘ 3“ ft-in
		2100 mm 6‘ 11“ ft-in
		2600 mm 8‘ 6“ ft-in
		3000 mm 9‘ 10“ ft-in
D	Ø of stay rope	18 mm 0.71“ in
B	Length of pin	90 mm 3.54“ in
D1	Pin Ø	35 mm 1.38“ in

Tab. 145: Technical data stay ropes

LWN/LR.x/V03.01//Auslieferung/2015-06-03/en

copyright by
LIEBHERR

Pins for steel pendant straps in front of reducing adapter

The pins supplied with the pendant straps must be exchanged for longer pins.

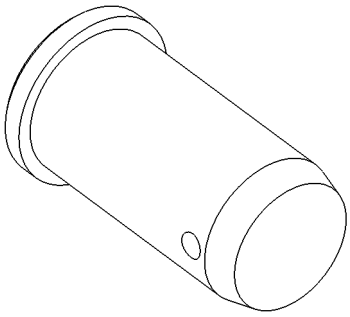

Fig. 248: Pins for steel pendant straps in front of reducing adapter (illustration of principle)

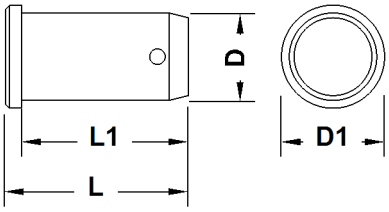

Fig. 249: Dimensions pins for steel pendant straps in front of reducing adapter

Name		Value
L	Total length	140 mm 5.51“ in
L1	Length	128 mm 5.04“ in
D	Diameter	65 mm 2.56“ in
D1	Outer diameter	80 mm 3.15“ in

Tab. 146: Technical data pins for steel pendant straps in front of reducing adapter

Pins for CF pendant straps in front of reducing adapter

The pins supplied with the pendant straps must be exchanged for longer pins.

LWN/LR.x/V03.01//Auslieferung/2015-06-03/en

copyright by
LIEBHERR

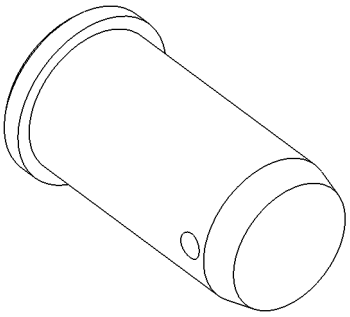

Fig. 250: Pins for CF pendant straps in front of reducing adapter (illustration of principle)

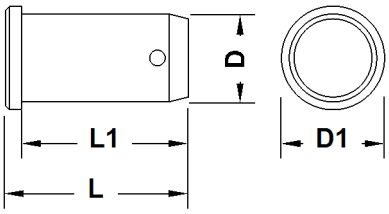

Fig. 251: Dimensions pins for CF pendant straps in front of reducing adapter

Name		Value
L	Total length	170 mm 6.69“ in
L1	Length	160 mm 6.30“ in
D	Diameter	65 mm 2.56“ in
D1	Outer diameter	85 mm 3.35“ in

Tab. 147: Technical data pins for CF pendant straps in front of reducing adapter

Pins for steel pendant straps behind reducing adapter

The pins supplied with the pendant straps must be exchanged for longer pins.

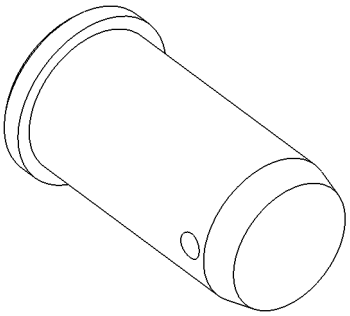

Fig. 252: Pins for steel pendant straps behind reducing adapter (illustration of principle)

LWN/LR.x/V03.01//Auslieferung/2015-06-03/en

copyright by
LIEBHERR

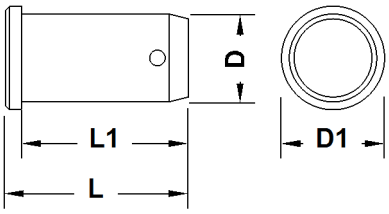

Fig. 253: Dimensions pins for steel pendant straps behind reducing adapter

Name		Value
L	Total length	120 mm 4.72“ in
L1	Length	112 mm 4.41“ in
D	Diameter	55 mm 2.17“ in
D1	Outer diameter	63 mm 2.48“ in

Tab. 148: Technical data pins for steel pendant straps behind reducing adapter

Pins for CF pendant straps behind reducing adapter

The pins supplied with the pendant straps must be exchanged for longer pins.

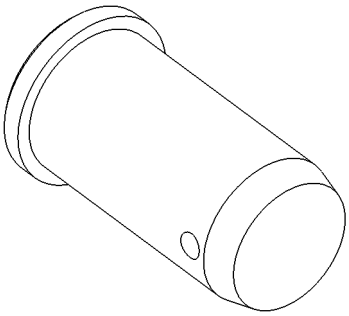

Fig. 254: Pins for CF pendant straps behind reducing adapter (illustration of principle)

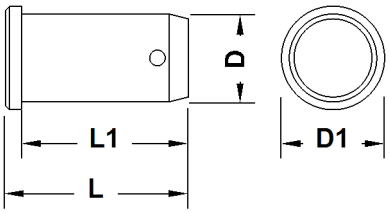

Fig. 255: Dimensions pins for CF pendant straps behind reducing adapter

Name		Value
L	Total length	158 mm 6.22“ in

LWN/LR.x/V03.01//Auslieferung/2015-06-03/en

copyright by
LIEBHERR

Name		Value
L1	Length	153 mm 6.02“ in
D	Diameter	60 mm 2.36“ in
D1	Outer diameter	68 mm 2.68“ in

Tab. 149: Technical data pins for CF pendant straps behind reducing adapter

1.13.4 Steel pendant straps on reducing adapter 2821/2316

Steel pendant straps on reducing adapter 2821/2316.24 12 m (40 ft)

Reducing adapter pendant strap 12 m (40 ft)

Installation site in crane operation:
– Main boom 2821 + reducing adapter 2821/2316 (For more information see: Pendant straps A-frame1 to main boom head 2316, page 1459)

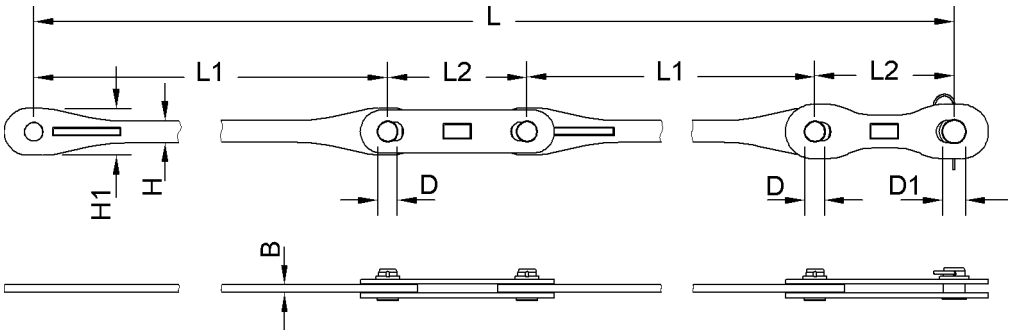

Fig. 256: Dimensions reducing adapter pendant strap 12 m (40 ft)

Name		Value
L	Length	12000 mm 39‘ 4“ ft-in
L1	Length of pendant strap	5580 mm 18‘ 4“ ft-in
L2	Length of connecting link	420 mm 1‘ 5“ ft-in
W	Width of pendant strap	22 mm 0.87“ in
H	Height of pendant strap	66 mm 2.60“ in
H1	Height of pendant strap	140 mm 5.51“ in
D	Pin Ø	55 mm 2.17“ in

LWN/LR.x/V03.01//Auslieferung/2015-06-03/en

copyright by LIEBHERR

Name		Value
D1	Pin Ø	65 mm 2.56“ in
Weight		181 kg 399 lb

Tab. 150: Technical data reducing adapter pendant strap 12 m (40 ft)

Steel pendant straps on main boom section 2316.25 1 m (3 ft)

Connecting link

Installation site in crane operation:
– Main boom 2821 + reducing adapter 2821/2316 (For more information see: Pendant straps A-frame1 to main boom head 2316, page 1459)

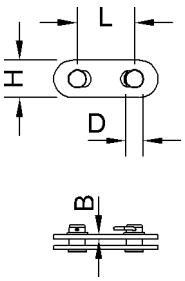

Fig. 257: Dimensions connecting link

Name		Value
L	Length of connecting link	200 mm 7.87“ in
W	Width of connecting link	15 mm 0.59“ in
H	Height of connecting link	130 mm 5.12“ in
D	Pin Ø	55 mm 2.17“ in
Weight		6 kg 13.23 lb

Tab. 151: Technical data connecting link

LWN/LR.x/V03.01//Auslieferung/2015-06-03/en

copyright by
LIEBHERR

1.13.5 CF pendant straps on reducing adapter 2821/2316

CF pendant straps on reducing adapter 2821/2316.24 12 m (40 ft)

Reducing adapter pendant strap 12 m (40 ft)

Installation site in crane operation:
– Main boom 2821 + reducing adapter 2821/2316 (For more information see: Pendant straps A-frame1 to main boom head 2316, page 1461)

Generation A of reducing adapter pendant strap 12 m (40 ft)

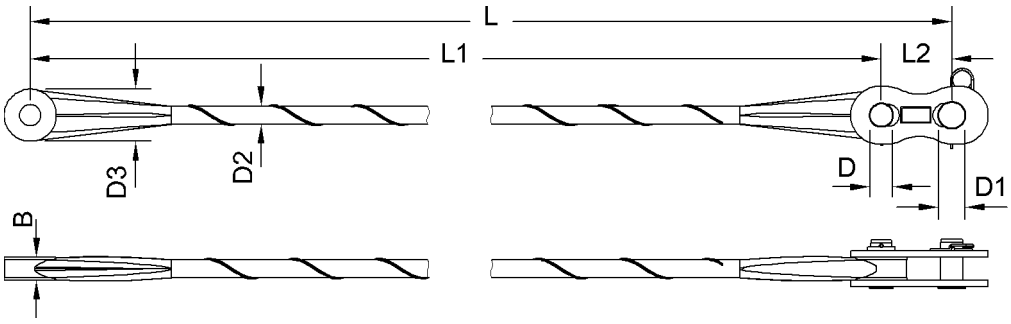

Fig. 258: Reducing adapter pendant strap 12 m (40 ft)

Name		Value
L	Length	12000 mm 39‘ 4“ ft-in
L1	Length of pendant strap	11800 mm 38‘ 9“ ft-in
L2	Length of connecting link	200 mm 7.87“ in
W	Width	64 mm 2.52“ in
D	Pin Ø	60 mm 2.36“ in
D1	Pin Ø	65 mm 2.56“ in
D2	Pendant strap Ø	50 mm 1.97“ in
D3	Pendant strap Ø	148 mm 5.83“ in
Weight		62 kg 137 lb

Tab. 152: Technical data reducing adapter pendant strap 12 m (40 ft)

LWN/LR.x/V03.01//Auslieferung/2015-06-03/en

copyright by
LIEBHERR

Generation B of reducing adapter pendant strap 12 m (40 ft)

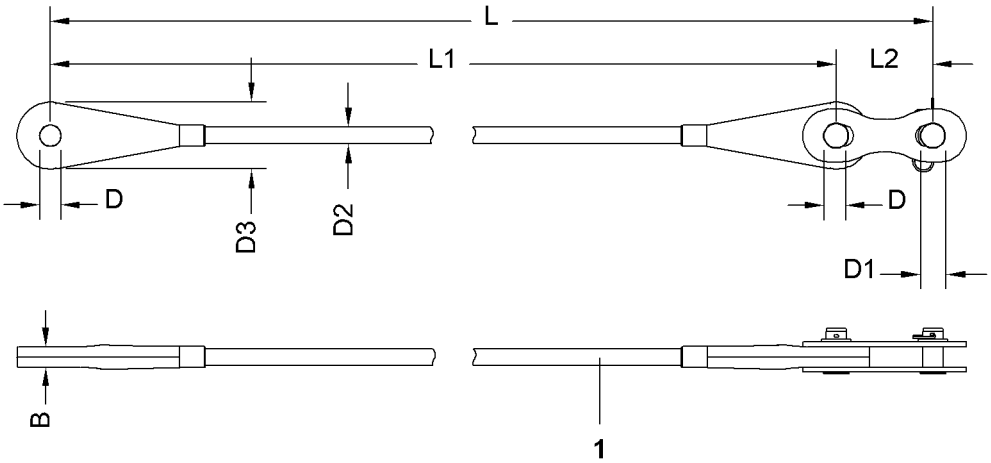

Fig. 259: Dimensions reducing adapter pendant strap 12 m (40 ft)

1 Wire mesh hose as protective sheath

Name		Value
L	Length	12000 mm 39‘ 4“ ft-in
L1	Length of pendant strap	11800 mm 38‘ 9“ ft-in
L2	Length of connecting link	200 mm 7.87“ in
B	Width	63 mm 2.48“ in
D	Pin Ø	60 mm 2.36“ in
D1	Pin Ø	65 mm 2.56“ in
D2	Pendant strap Ø	48 mm 1.89“ in
D3	Pendant strap Ø	161 mm 6.34“ in
Weight		51 kg 112 lb

Tab. 153: Technical data reducing adapter pendant strap 12 m (40 ft)

CF pendant straps on main boom section 2316.25 1 m (3 ft)

Connecting link

Installation site in crane operation:
– Main boom 2821 + reducing adapter 2821/2316 (For more information see: Pendant straps A-frame1 to main boom head 2316, page 1461)

LWN/LR.x/V03.01//Auslieferung/2015-06-03/en

copyright by LIEBHERR

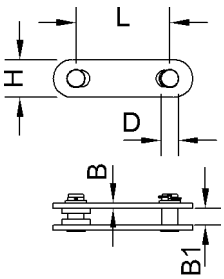

Fig. 260: Dimensions connecting link

Name		Value
L	Length of connecting link	350 mm 1‘ 2“ ft-in
W	Width of connecting link	18 mm 0.71“ in
H	Height of connecting link	140 mm 5.51“ in
D	Pin Ø	60 mm 2.36“ in
Weight		8 kg 17.64 lb

Tab. 154: Technical data connecting link

LWN/LR.x/V03.01//Auslieferung/2015-06-03/en

copyright by
LIEBHERR

1.14 Fixed jib - overview

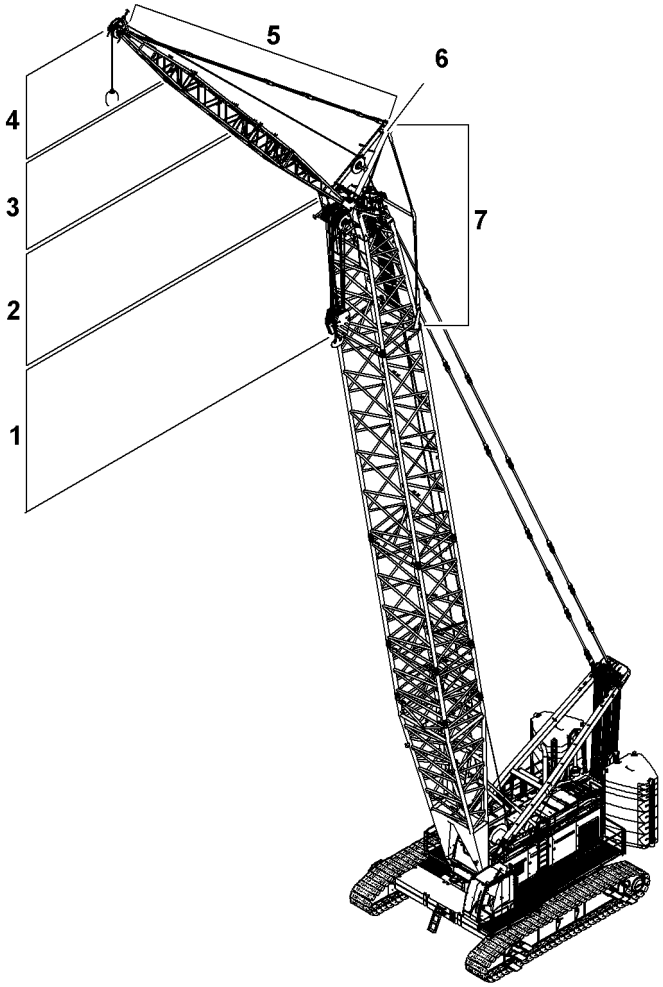

Fig. 261: Fixed jib - overview

1	Boom head section	**5**	Jib pendant straps
2	Jib base section	**6**	A-frame 2
3	Jib sections	**7**	Jib backstay straps
4	Jib head section		

The fixed jib is composed of:
– Jib base section **2**
– Jib sections (3 m (10 ft), 6 m (20 ft), 12 m (40 ft)) **3**
– Jib head section **4**

The jib pendant straps **5** connect A-frame 2 **6** to the jib head section **4**.

The jib backstay straps **7** connect A-frame 2 **6** to the boom head section **1**.

The fixed jib can be tensioned to 15° or 30°.

LWN/LR.x/V03.01//Auslieferung/2015-06-03/en

copyright by
LIEBHERR

1.15 1713 fixed jib

1.15.1 Jib base section 1713.22

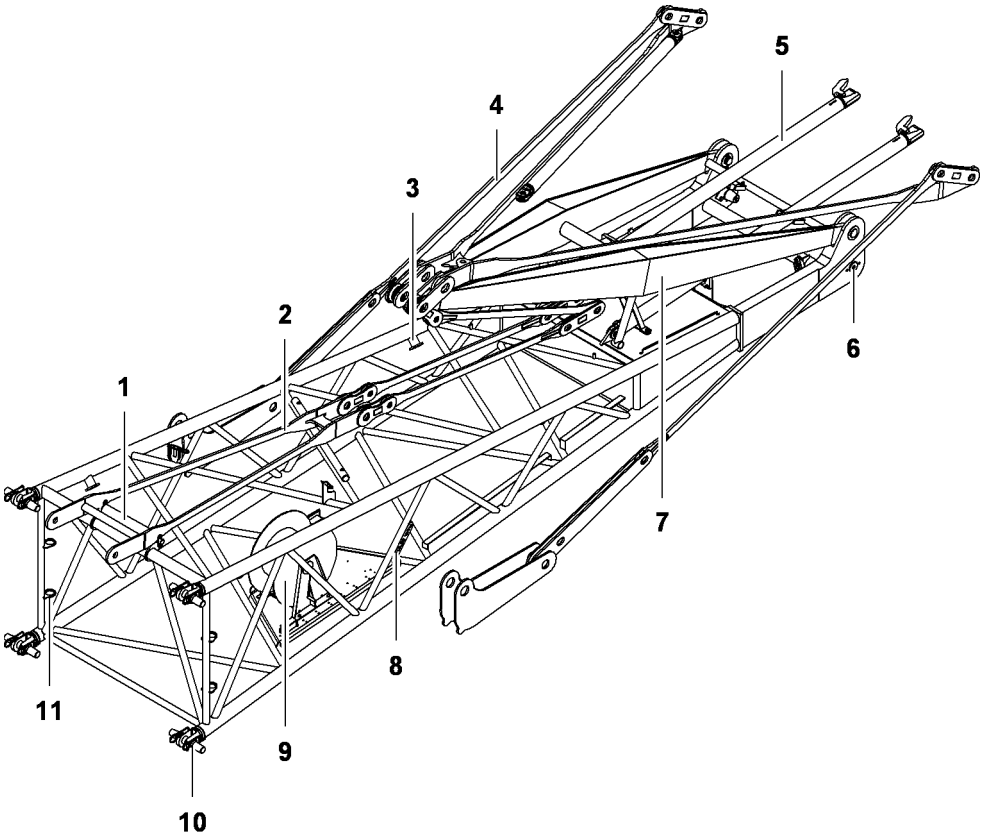

Fig. 262: Jib base section 1713.22

1 Rope protection roller
2 Transport position (2x) of jib pendant straps
3 Lifting point (4x)
4 Transport position of the equalizer on A-frame 2 (jib backstay strap)
5 Rigid tilting-back support (2x)
6 Pivot point (2x) for main boom head section
7 A-frame 2
8 Boom identification plate
9 Cable drum
10 Pin connection point (4x) with double-taper pins (4x)
11 Transport bracket (4x) for double-taper pins

LWN/LR.x/V03.01//Auslieferung/2015-06-03/en

copyright by LIEBHERR

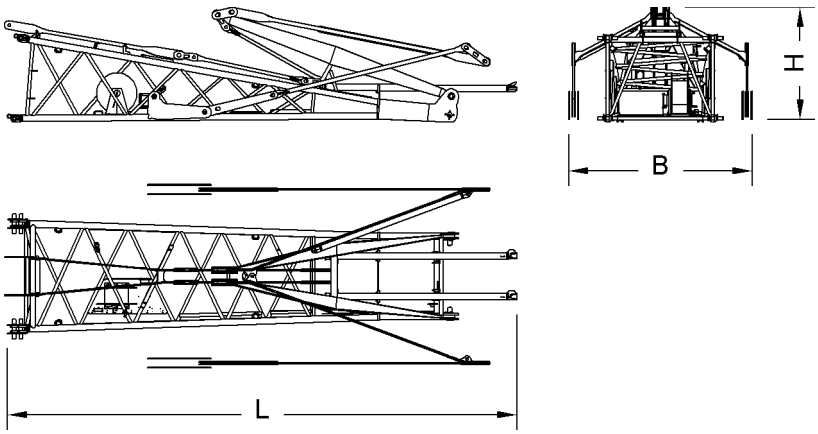

Fig. 263: Dimensions of jib base section 1713.22

Name		Value
System length		7000 mm 23‘ ft-in
System width		1700 mm 5‘ 7“ ft-in
System height		1300 mm 4‘ 3“ ft-in
L	Length	9550 mm 31‘ 4“ ft-in
B	Width	2450 mm 8‘ ft-in
H	Height	1900 mm 6‘ 3“ ft-in
Weight (incl. pendant straps, tilting-back supports and jib backstay straps)		2495 kg 5,500 lb
Double-taper pins Ø		60 mm 2.36“ in

Tab. 155: Technical data jib base section 1713.22

LWN/LR.x/V03.01//Auslieferung/2015-06-03/en

copyright by
LIEBHERR

1.15.2 1713.18 jib section 3 m (10 ft)

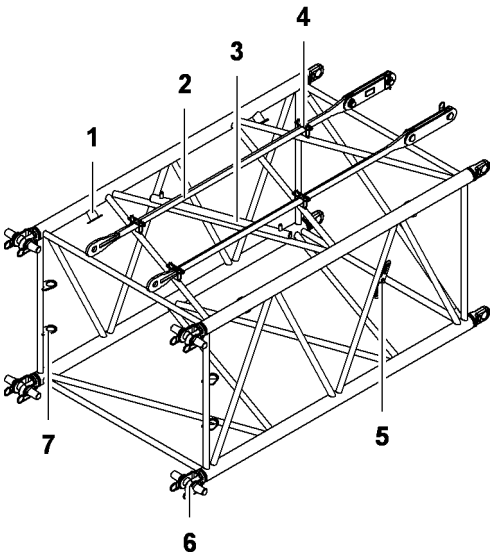

Fig. 264: 1713.18 jib section 3 m (10 ft)

1 Lifting point (4x)
2 Transport position (2x) of the jib pendant straps 3 m (10 ft)
3 Rope protection support
4 Transport brackets (4x) for pendant straps
5 Boom identification plate
6 Pin connection point (8x) with double-taper pins (4x)
7 Transport bracket (4x) for double-taper pins

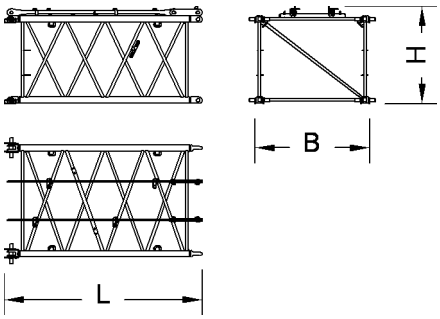

Fig. 265: Dimensions of 1713.18 jib section 3 m (10 ft)

Name		Value
System length		3000 mm 9‘ 10“ ft-in
System width		1700 mm 5‘ 7“ ft-in
System height		1300 mm 4‘ 3“ ft-in
L	Length	3150 mm 10‘ 4“ ft-in
B	Width	1820 mm 6‘ ft-in

LWN/LR.x/V03.01//Auslieferung/2015-06-03/en

copyright by
LIEBHERR

Name		Value
H	Height (incl. pendant straps)	1500 mm 4‘ 11“ ft-in
Weight (incl. pendant straps)		430 kg 948 lb
Double-taper pins Ø		60 mm 2.36“ in

Tab. 156: Technical data for 1713.18 jib section 3 m (10 ft)

1.15.3 1713.18 jib section 6 m (20 ft)

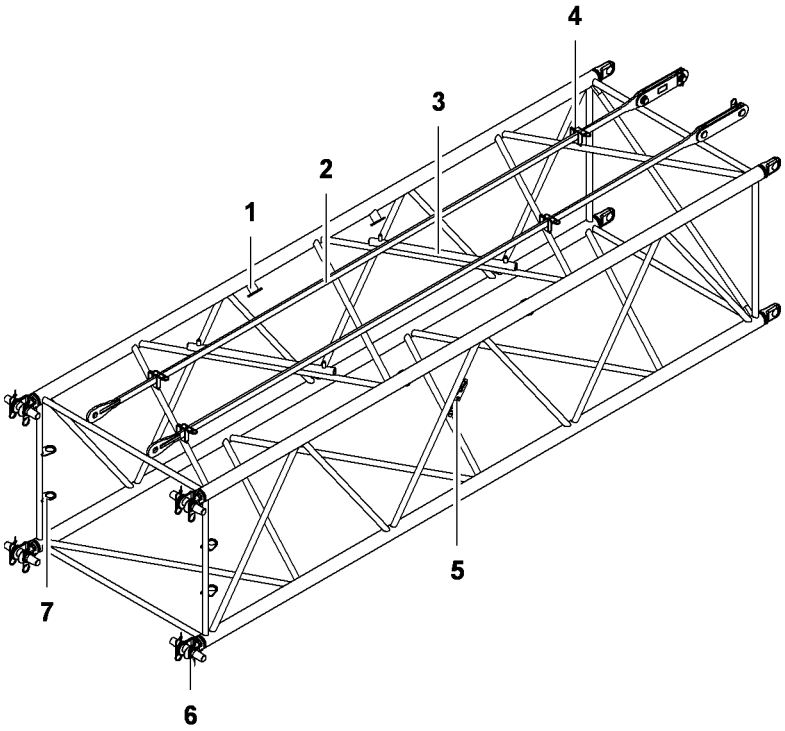

Fig. 266: 1713.18 jib section 6 m (20 ft)

1 Lifting point (4x)
2 Transport position (2x) of the jib pendant straps 6 m (20 ft)
3 Rope guard support (2x)
4 Transport brackets (4x) for pendant straps
5 Boom identification plate
6 Pin connection point (8x) with double-taper pins (4x)
7 Transport bracket (4x) for double-taper pins

LWN/LR.x/V03.01//Auslieferung/2015-06-03/en

copyright by
LIEBHERR

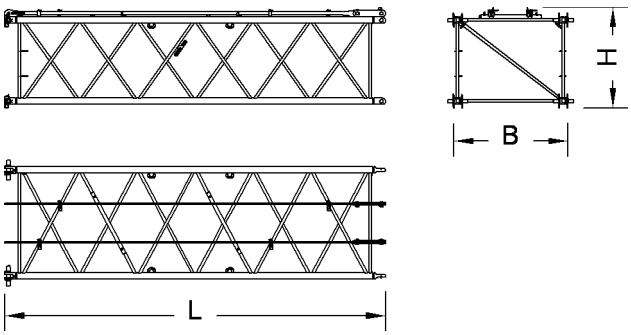

Fig. 267: Dimensions of 1713.18 jib section 6 m (20 ft)

Name		Value
System length		6000 mm 19‘ 8“ ft-in
System width		1700 mm 5‘ 7“ ft-in
System height		1300 mm 4‘ 3“ ft-in
L	Length	6150 mm 20‘ 2“ ft-in
B	Width	1820 mm 6‘ ft-in
H	Height (incl. pendant straps)	1500 mm 4‘ 11“ ft-in
Weight (incl. pendant straps)		630 kg 1,389 lb
Double-taper pins Ø		60 mm 2.36“ in

Tab. 157: Technical data for 1713.18 jib section 6 m (20 ft)

LWN/LR.x/V03.01//Auslieferung/2015-06-03/en

copyright by
LIEBHERR

1.15.4 1713.18 jib section 12 m (40 ft)

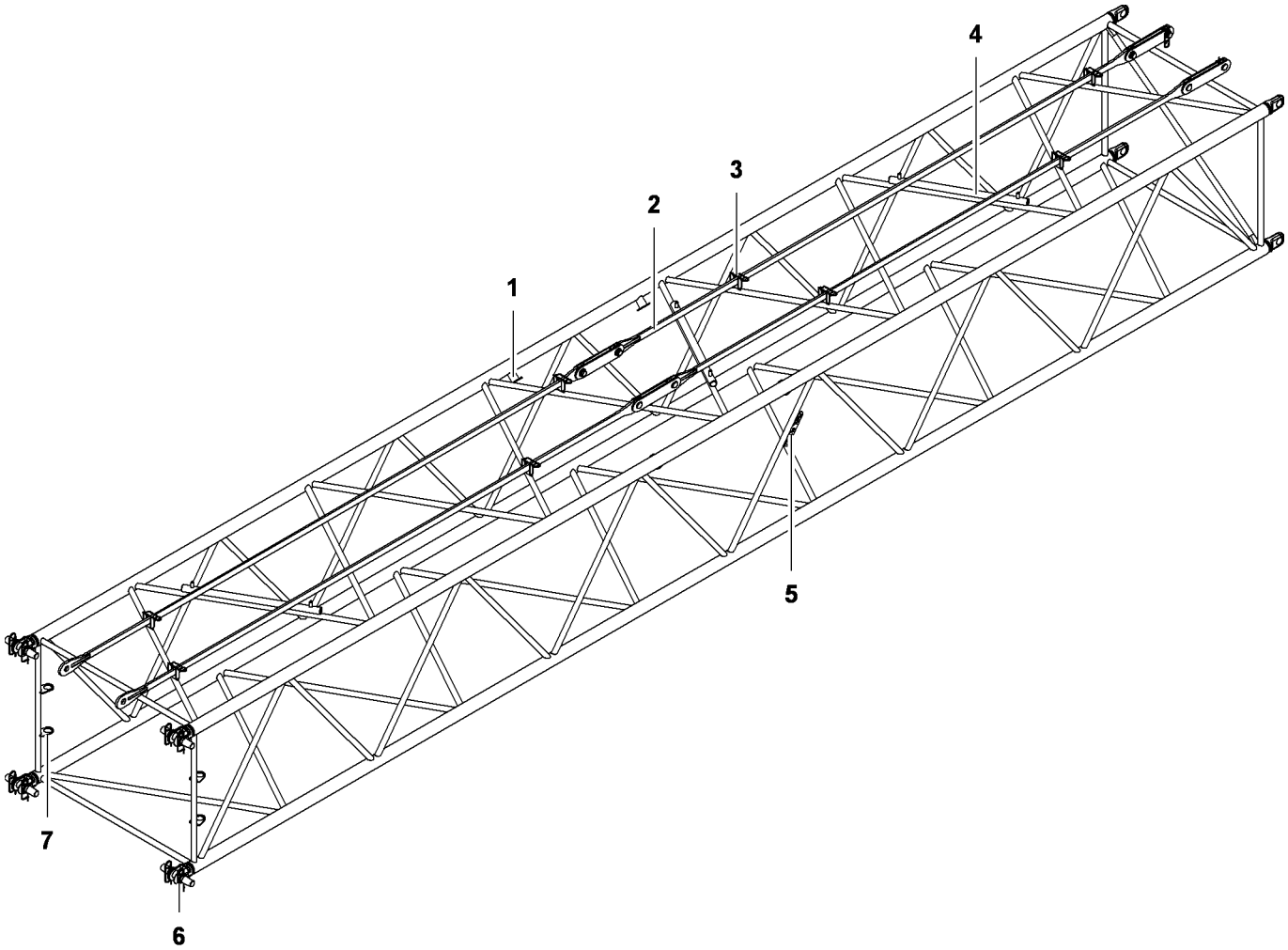

Fig. 268: 1713.18 jib section 12 m (40 ft)

1	Lifting point (4x)	**4**	Rope protection support (3x)	**7**	Transport bracket (4x) for double-taper pins
2	Transport position (2x) of the jib pendant straps 12 m (40 ft)	**5**	Boom identification plate		
3	Transport bracket (8x) for pendant straps	**6**	Pin connection point (8x) with double-taper pins (4x)		

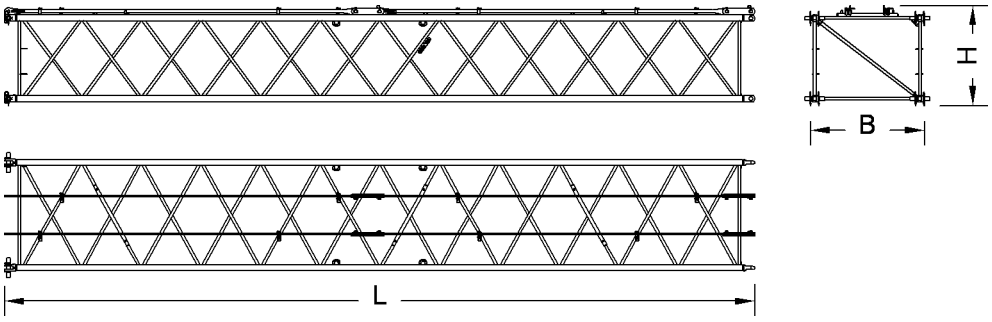

Fig. 269: Dimensions of 1713.18 jib section 12 m (40 ft)

LWN/LR.x/V03.01//Auslieferung/2015-06-03/en

copyright by
LIEBHERR

Name		Value
System length		12000 mm 39‘ 4“ ft-in
System width		1700 mm 5‘ 7“ ft-in
System height		1300 mm 4‘ 3“ ft-in
L	Length	12150 mm 39‘ 10“ ft-in
B	Width	1820 mm 6‘ ft-in
H	Height (incl. pendant straps)	1500 mm 4‘ 11“ ft-in
Weight (incl. pendant straps)		1140 kg 2,513 lb
Double-taper pins Ø		60 mm 2.36“ in

Tab. 158: Technical data for 1713.18 jib section 12 m (40 ft)

1.15.5 1713.21 jib head section

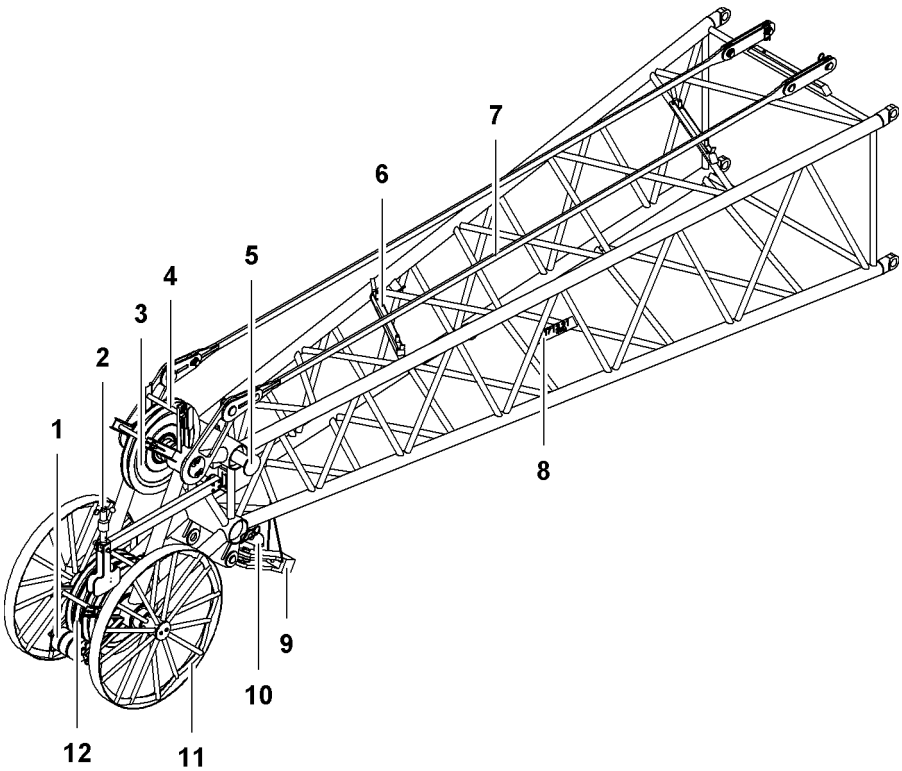

Fig. 270: 1713.21 jib head section

1 Rope protection roller (3x)
2 Anemometer
3 Pulley
7 Transport position (2x) of jib pendant straps
8 Boom identification plate
9 Rope fixation

See next page for continuation of the image legend

LWN/LR.x/V03.01//Auslieferung/2015-06-03/en

4	Rope protection pipe (2x)	**10**	Hoist limit switch (2x)
5	Lifting point (4x)	**11**	Wheel (2x)
6	Rope guard support (2x)	**12**	Pulley (3x)

This jib head section is designed to allow an auxiliary jib to be attached (For more information see: 1.27 Auxiliary jib* (15 t (33.000 lb)), page 377) .

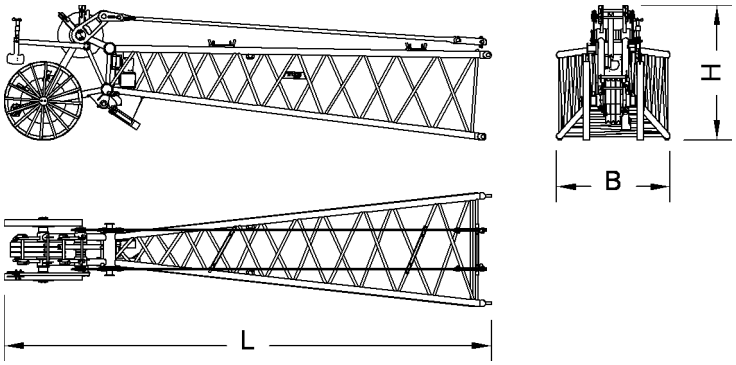

Fig. 271: 1713.21 jib head section dimensions

Name		Value
System length		7000 mm 23‘ ft-in
System width		1700 mm 5‘ 7“ ft-in
System height		1300 mm 4‘ 3“ ft-in
L	Length	7750 mm 25‘ 5“ ft-in
B	Width	1820 mm 6‘ ft-in
H	Height (incl. pendant straps)	2150 mm 7‘ 1“ ft-in
Weight (incl. pendant straps)		1353 kg 2,983 lb

Tab. 159: 1713.21 jib head section, technical data

1.15.6 Steel pendant straps on fixed jib 1713

Steel pendant straps on A-frame2

Equalizer A-frame2 (jib backstay strap)

Installation site in crane operation:
– Fixed jib 1713 (For more information see: Backstay straps A-frame2 to main boom head 2821, page 1485)

LWN/LR.x/V03.01//Auslieferung/2015-06-03/en

copyright by
LIEBHERR

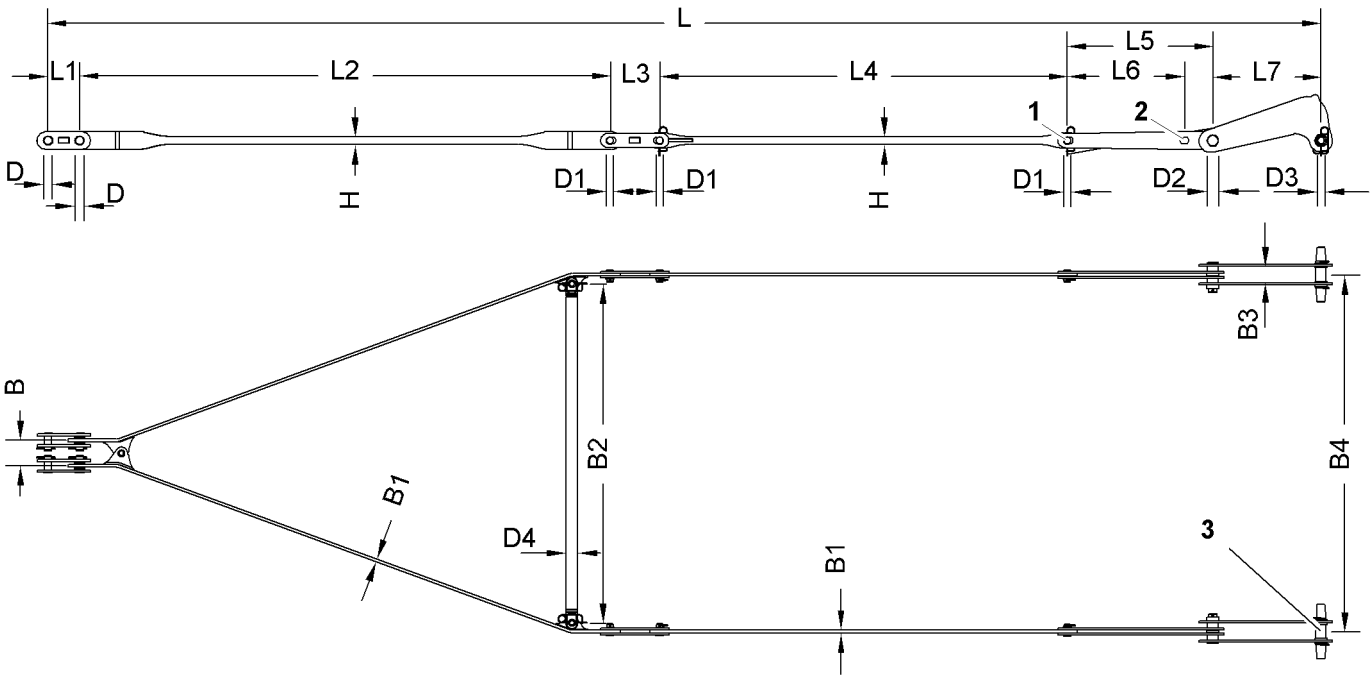

Fig. 272: Dimensions equalizer on A-frame2 (jib backstay strap)

1 Pin connection point 30° (30°) **2** Pin connection point 15° (15°) **3** Double-taper pins 431 mm (1‘ 5“ ft-in)/ Ø80 mm (3.15“ in) (2x)

The double-taper pins (431 mm (1‘ 5“ ft-in) x Ø80 mm (3.15“ in)) **3** replace the top double-taper pins on the main boom head.

Name		Value
L	Length	at 30° (30°) 10000 mm 32‘ 10“ ft-in
		at 15° (15°) 9090 mm 29‘ 10“ ft-in
L1	Length of connecting link	250 mm 9.84“ in
L2	Length of crossbar	4165 mm 13‘ 8“ ft-in
L3	Length of connecting link	390 mm 1‘ 3“ ft-in
L4	Length of pendant strap	3202 mm 10‘ 6“ ft-in
L5	Length of connecting link (30° (30°))	1143 mm 3‘ 9“ ft-in
L6	Length of connecting link (15° (15°))	910 mm 3‘ ft-in
L7	Length of connecting link	850 mm 2‘ 9“ ft-in

LWN/LR.x/V03.01//Auslieferung/2015-06-03/en

copyright by
LIEBHERR

Name		Value
W	Width	200 mm 7.87“ in
W1	Width of pendant strap	22 mm 0.87“ in
W2	Width	2660 mm 8‘ 9“ ft-in
W3	Width	132 mm 5.20“ in
W4	Width	2800 mm 9‘ 2“ ft-in
H	Height of pendant strap	62 mm 2.44“ in
D	Pin Ø	60 mm 2.36“ in
D1	Pin Ø	50 mm 1.97“ in
D2	Pin Ø	70 mm 2.76“ in
D3	Double-taper pins Ø	80 mm 3.15“ in
D4	Spacer bar Ø	90 mm 3.54“ in
Weight		582 kg 1,283 lb

Tab. 160: Technical data equalizer on A-frame2 (jib backstay strap)

Equalizer on A-frame2 (jib pendant strap)

Installation site in crane operation:
– Fixed jib 1713 (For more information see: Pendant straps A-frame2 to jib head 1713, page 1486)

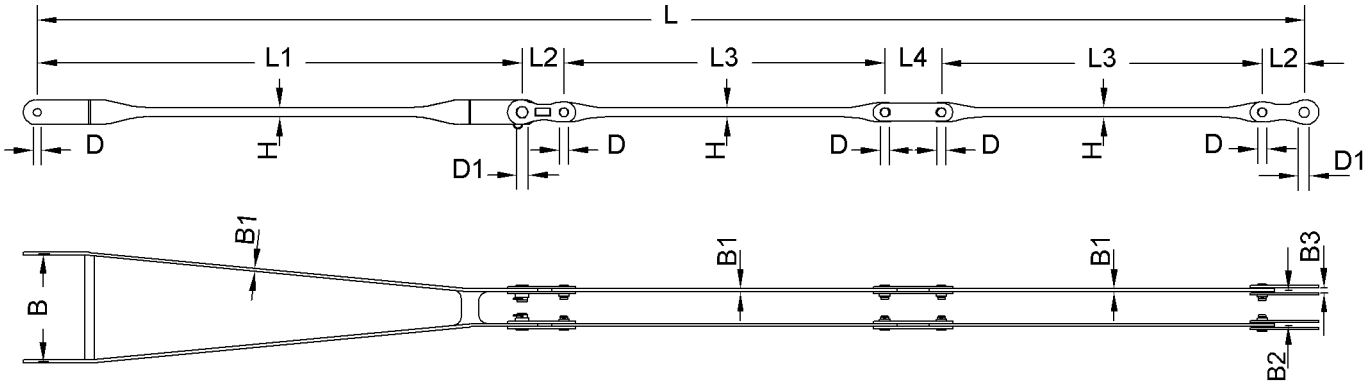

Fig. 273: Dimensions of equalizer on A-frame2 (jib pendant strap)

LWN/LR.x/V03.01//Auslieferung/2015-06-03/en

copyright by
LIEBHERR

Name		Value
L	Length	7275 mm 23‘ 10“ ft-in
L1	Length of crossbar	2785 mm 9‘ 2“ ft-in
L2	Length of connecting link	240 mm 9.45“ in
L3	Length of pendant strap	1842 mm 6‘ 1“ ft-in
L4	Length of connecting link	326 mm 1‘ 1“ ft-in
W	Width	618 mm 2‘ ft-in
W1	Width of pendant strap	18 mm 0.71“ in
W2	Width	200 mm 7.87“ in
W3	Width	30 mm 1.18“ in
H	Height of pendant strap	54 mm 2.13“ in
D	Pin Ø	45 mm 1.77“ in
D1	Pin Ø	60 mm 2.36“ in
Weight		198 kg 437 lb

Tab. 161: Technical data equalizer on A-frame2 (jib pendant strap)

Steel pendant straps on jib section 1713.18 3 m (10 ft)

Jib pendant strap 3 m (10 ft)

Installation site in crane operation:
– Fixed jib 1713 (For more information see: Pendant straps A-frame2 to jib head 1713, page 1486)

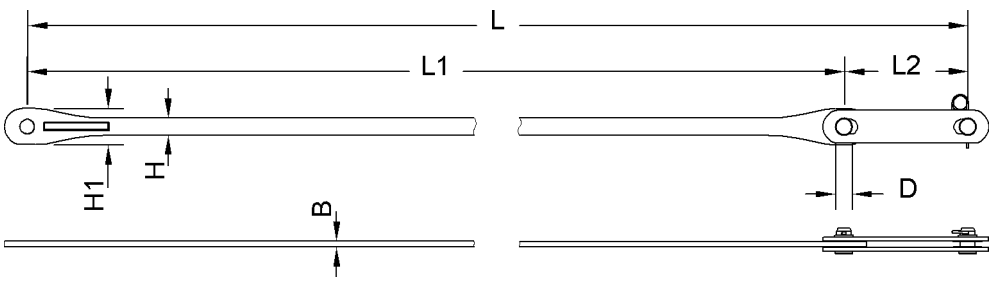

LWN/LR.x/V03.01//Auslieferung/2015-06-03/en

Fig. 274: Dimensions jib pendant strap 3 m (10 ft)

copyright by LIEBHERR

Name		Value
L	Length	3000 mm 9‘ 10“ ft-in
L1	Length of pendant strap	2610 mm 8‘ 7“ ft-in
L2	Length of connecting link	390 mm 1‘ 3“ ft-in
W	Width of pendant strap	18 mm 0.71“ in
H	Height of pendant strap	54 mm 2.13“ in
H1	Height of pendant strap	113 mm 4.45“ in
D	Pin Ø	45 mm 1.77“ in
Weight		48 kg 106 lb

Tab. 162: Technical data jib pendant strap 3 m (10 ft)

Steel pendant straps on jib section 1713.18 6 m (20 ft)

Jib pendant strap 6 m (20 ft)

Installation site in crane operation:
– Fixed jib 1713 (For more information see: Pendant straps A-frame2 to jib head 1713, page 1486)

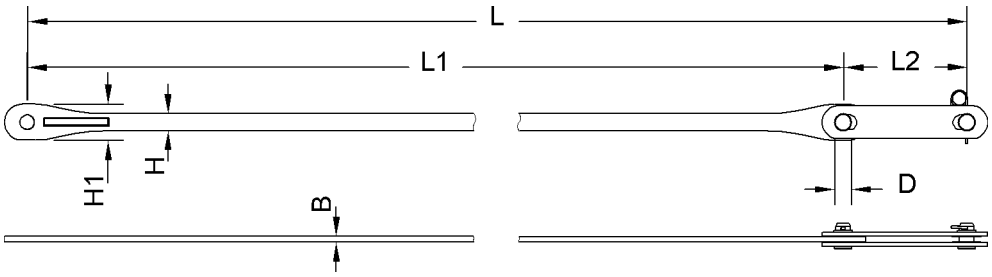

Fig. 275: Dimensions jib pendant strap 6 m (20 ft)

Name		Value
L	Length	6000 mm 19‘ 8“ ft-in
L1	Length of pendant strap	5610 mm 18‘ 5“ ft-in
L2	Length of connecting link	390 mm 1‘ 3“ ft-in
W	Width of pendant strap	18 mm 0.71“ in

LWN/LR.x/V03.01//Auslieferung/2015-06-03/en

copyright by
LIEBHERR

Name		Value
H	Height of pendant strap	54 mm 2.13“ in
H1	Height of pendant strap	113 mm 4.45“ in
D	Pin Ø	45 mm 1.77“ in
Weight		58 kg 128 lb

Tab. 163: Technical data jib pendant strap 6 m (20 ft)

Steel pendant straps on jib section 1713.18 12 m (40 ft)

Jib pendant strap 12 m (40 ft)

Installation site in crane mode:
– Fixed jib 1713 (For more information see: Pendant straps A-frame2 to jib head 1713, page 1486)

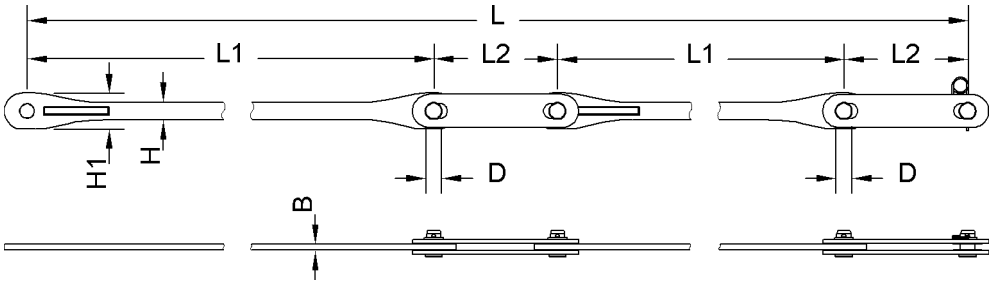

Fig. 276: Dimensions jib pendant strap 12 m (40 ft)

Name		Value
L	Length	12000 mm 39‘ 4“ ft-in
L1	Length of pendant strap	5610 mm 18‘ 5“ ft-in
L2	Length of connecting link	390 mm 1‘ 3“ ft-in
W	Width of pendant strap	18 mm 0.71“ in
H	Height of pendant strap	54 mm 2.13“ in
H1	Height of pendant strap	113 mm 4.45“ in
D	Pin Ø	45 mm 1.77“ in
Weight		58 kg 128 lb

Tab. 164: Technical data jib pendant strap 12 m (40 ft)

LWN/LR.x/V03.01//Auslieferung/2015-06-03/en

copyright by
LIEBHERR

Steel pendant straps on jib head 1713.21

Jib pendant strap on jib head 1713.21

Installation site in crane operation:
– Fixed jib 1713 (For more information see: Pendant straps A-frame2 to jib head 1713, page 1486)

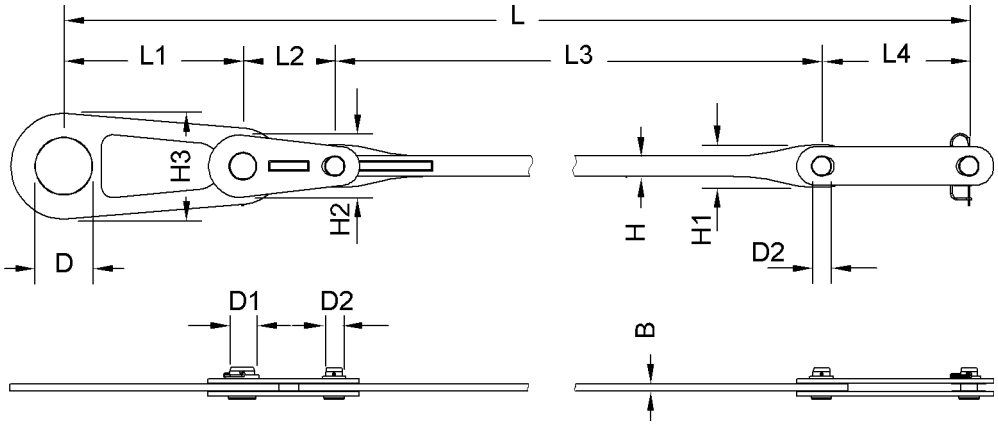

Fig. 277: Dimensions jib pendant strap on jib head 1713.21

Name		Value
L	Length	6500 mm 21‘ 4“ ft-in
L1	Length of connecting link	474 mm 1‘ 7“ ft-in
L2	Length of connecting link	243 mm 9.57“ in
L3	Length of pendant strap	5393 mm 17‘ 8“ ft-in
L4	Length of connecting link	390 mm 1‘ 3“ ft-in
W	Width of pendant strap	18 mm 0.71“ in
H	Height of pendant strap	54 mm 2.13“ in
H1	Height of pendant strap	113 mm 4.45“ in
H2	Height of connecting link	166 mm 6.54“ in
H3	Height of connecting link	280 mm 11.02“ in
D	Pin Ø	150 mm 5.91“ in
D1	Pin Ø	65 mm 2.56“ in

LWN/LR.x/V03.01//Auslieferung/2015-06-03/en

copyright by
LIEBHERR

Name		Value
D2	Pin Ø	45 mm 1.77“ in
Weight		75 kg 165 lb

Tab. 165: Technical data jib pendant strap on jib head 1713.21

1.15.7 CF pendant straps on fixed jib 1713

When installing the fixed jib 1713 on the machine with CF pendant straps, use the steel pendant straps and the steel backstay straps (For more information see: 1.15.6 Steel pendant straps on fixed jib 1713, page 253) .

LWN/LR.x/V03.01//Auslieferung/2015-06-03/en

copyright by
LIEBHERR

1.16 1507 fixed jib

1.16.1 Jib 1507.20

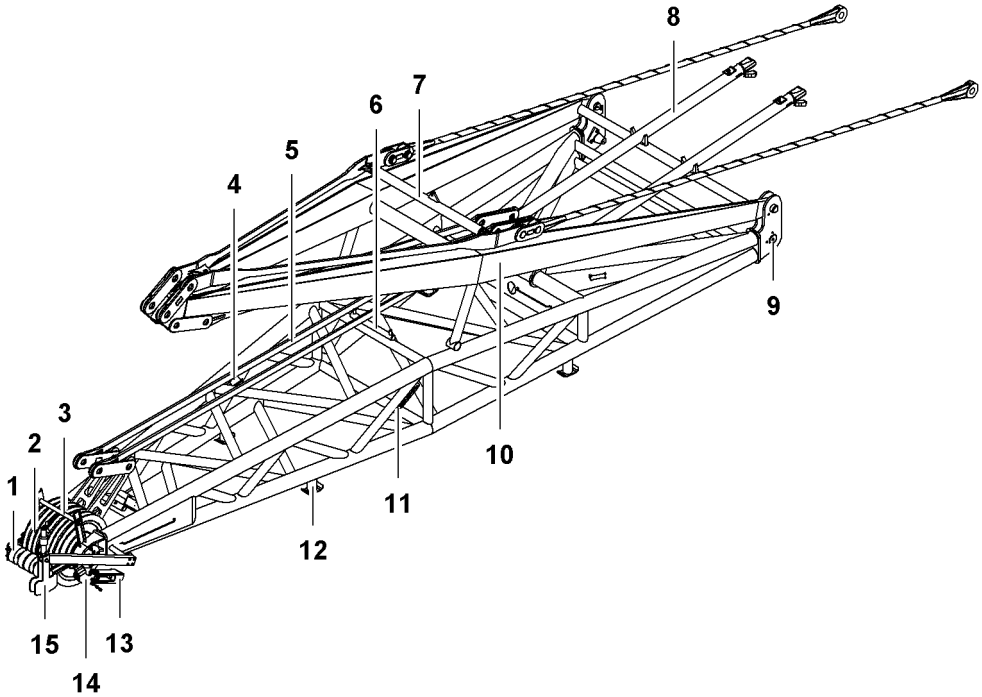

Fig. 278: Jib 1507.20

1	Rope protection roller (4x)	**9**	Pivot point (2x) for main boom head section
2	Pulley (4x)	**10**	A-frame 2
3	Rope protection pipe	**11**	Boom identification plate
4	Lifting point (4x)	**12**	Foot (4x)
5	Transport position (2x) of jib pendant straps	**13**	Rope fixation
6	Rope protection support (3x)	**14**	Hoist limit switch (2x)
7	Transport position of the equalizer on A-frame 2 (jib backstay strap)	**15**	Anemometer
8	Rigid tilting-back support (2x)		

LWN/LR.x/V03.01//Auslieferung/2015-06-03/en

copyright by
LIEBHERR

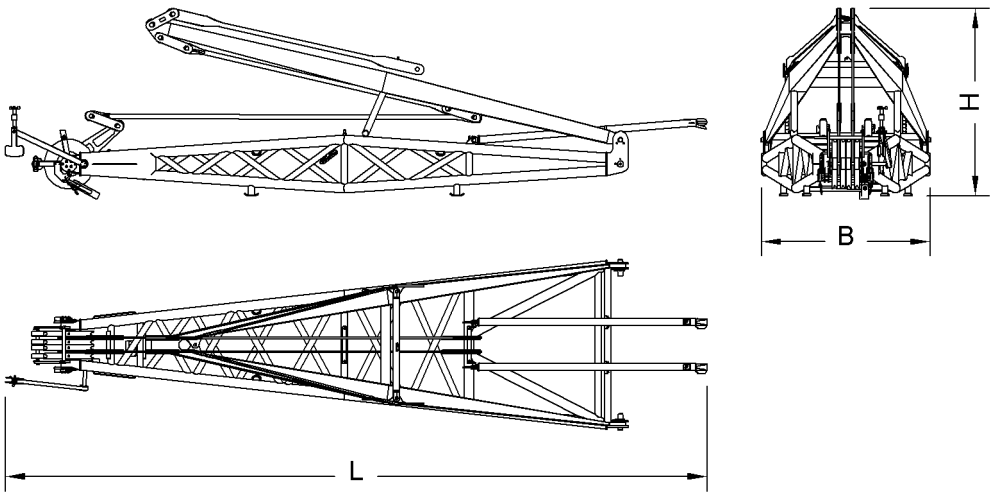

Fig. 279: Dimensions of 1507.20 jib

Name		Value
System length		8000 mm 26‘ 3“ ft-in
System width		1500 mm 4‘ 11“ ft-in
System height		700 mm 2‘ 4“ ft-in
L	Length	10178 mm 33‘ 5“ ft-in
B	Width	2470 mm 8‘ 1“ ft-in
H	Height	2712 mm 8‘ 11“ ft-in
Weight (incl. pendant straps, tilting-back supports and jib backstay straps)		3023 kg 6,664 lb

Tab. 166: Technical data fly jib 1507.20

1.16.2 Steel pendant straps on fixed jib 1507

Steel pendant straps on A-frame2

Equalizer A-frame2 (jib backstay strap)

Installation site in crane operation:
– Fixed jib 1507 (For more information see: Jib backstay straps A-frame2 to main boom base section 2821, page 1499)

LWN/LR.x/V03.01//Auslieferung/2015-06-03/en

copyright by
LIEBHERR

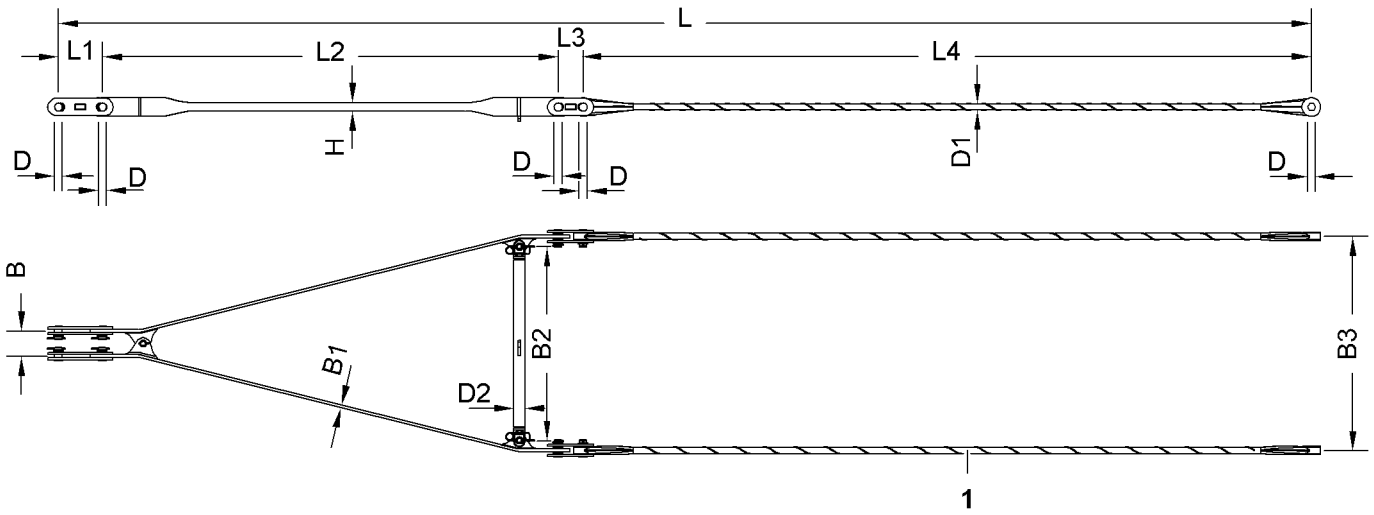

Fig. 280: Dimensions equalizer on A-frame2 (jib backstay strap)

1 CF pendant strap

Name		Value
L	Length	9980 mm 32‘ 9“ ft-in
L1	Length of connecting link	350 mm 1‘ 2“ ft-in
L2	Length of crossbar	3630 mm 11‘ 11“ ft-in
L3	Length of connecting link	200 mm 7.87“ in
L4	Length of pendant strap	5800 mm 19‘ ft-in
W	Width	200 mm 7.87“ in
W1	Width of pendant strap	22 mm 0.87“ in
W2	Width of spacer bar	1540 mm 5‘ 1“ ft-in
W3	Width	1700 mm 5‘ 7“ ft-in
H	Height of pendant strap	66 mm 2.60“ in
D	Pin Ø	60 mm 2.36“ in
D1	Pendant strap Ø	50 mm 1.97“ in
D2	Spacer bar Ø	89 mm 3.50“ in

LWN/LR.x/V03.01//Auslieferung/2015-06-03/en

copyright by
LIEBHERR

Name	Value
Weight	287 kg 633 lb

Tab. 167: Technical data equalizer on A-frame2 (jib backstay strap)

Jib pendant strap (A-frame2 to jib head 1507)

Installation site in crane operation:
– Fixed jib 1507 (For more information see: Pendant straps A-frame2 to jib head 1507, page 1500)

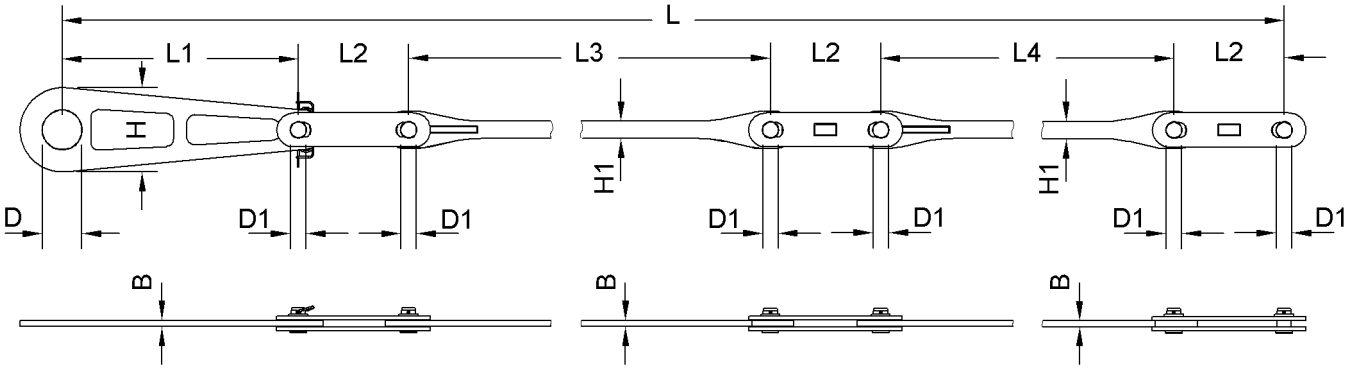

Fig. 281: Dimensions of jib pendant strap (A-frame2 to jib head 1507)

Name		Value
L	Length	11615 mm 38‘ 1“ ft-in
L1	Length of connecting link	900 mm 2‘ 11“ ft-in
L2	Length of connecting link	420 mm 1‘ 5“ ft-in
L3	Length of pendant strap	5580 mm 18‘ 4“ ft-in
L4	Length of connecting link	3875 mm 12‘ 9“ ft-in
W	Width of pendant strap	22 mm 0.87“ in
H	Height of connecting link	320 mm 1‘ 1“ ft-in
H1	Height of connecting link	66 mm 2.60“ in
D	Pin Ø	150 mm 5.91“ in
D1	Pin Ø	55 mm 2.17“ in
Weight		194 kg 428 lb

Tab. 168: Technical data jib pendant strap (A-frame2 to jib head 1507)

LWN/LR.x/V03.01//Auslieferung/2015-06-03/en

copyright by
LIEBHERR

Additional connecting elements/spacer brackets for fixed jib 1507

Backstay straps connecting element on fixed jib 1507

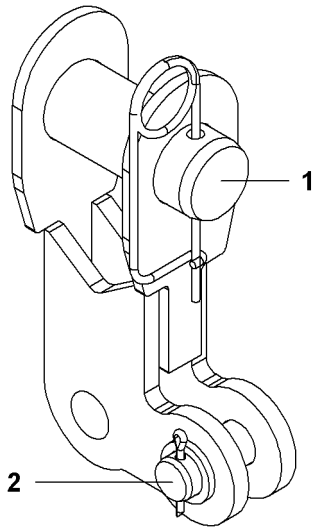

Fig. 282: Backstay straps connecting element on fixed jib 1507

1 Pin connection point with pendant strap

2 Pin connection point with spacer bracket

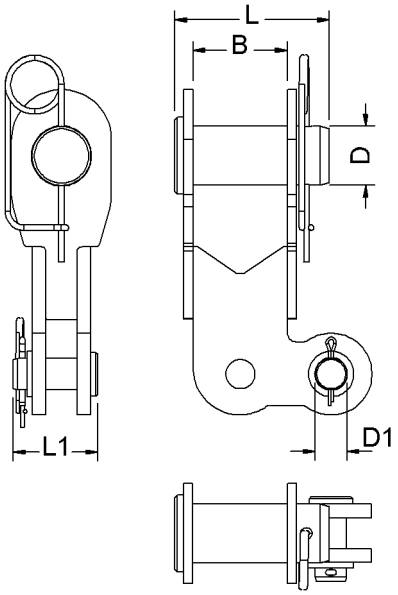

Fig. 283: Dimensions of backstay straps connecting element on fixed jib 1507

Name		Value
L	Length of pin	158 mm 6.22“ in
L1	Length of pins	85 mm 3.35“ in

LWN/LR.x/V03.01//Auslieferung/2015-06-03/en

copyright by
LIEBHERR

Name		Value
W	Width	104 mm 4.09“ in
D	Pin Ø	60 mm 2.36“ in
D1	Pin Ø	35 mm 1.38“ in

Tab. 169: Technical data backstay straps connecting elements on fixed jib 1507

Backstay straps spacer brackets on fixed jib 1507

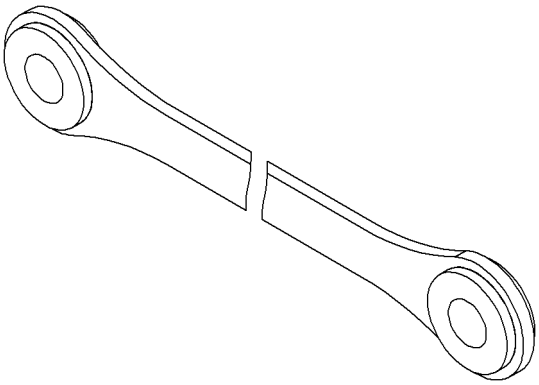

Fig. 284: Backstay straps spacer brackets on fixed jib 1507

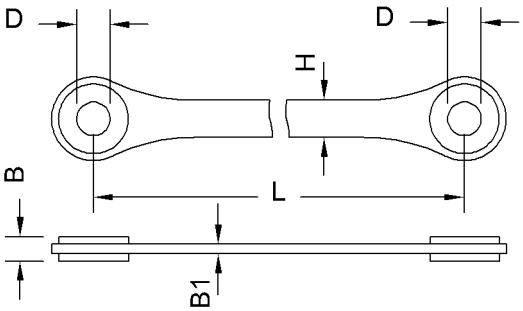

Fig. 285: Dimensions of backstay straps spacer brackets on fixed jib 1507

Name		Value
L	Length of spacer bracket	1500 mm 4‘ 11“ ft-in
W	Width	26 mm 1.02“ in
W1	Width	10 mm 0.39“ in
H	Height	40 mm 1.57“ in
D	Pin Ø	35 mm 1.38“ in

Tab. 170: Technical data backstay straps spacer brackets on fixed jib 1507

LWN/LR.x/V03.01//Auslieferung/2015-06-03/en

copyright by
LIEBHERR

1.16.3 CF pendant straps on fixed jib 1507

When installing the fixed jib 1507 on the machine with CF pendant straps, use the steel pendant straps and steel/CF backstay straps (For more information see: 1.16.2 Steel pendant straps on fixed jib 1507, page 262) .

LWN/LR.x/V03.01//Auslieferung/2015-06-03/en

copyright by
LIEBHERR

1.17 1008 fixed jib

1.17.1 Jib base section 1008.20

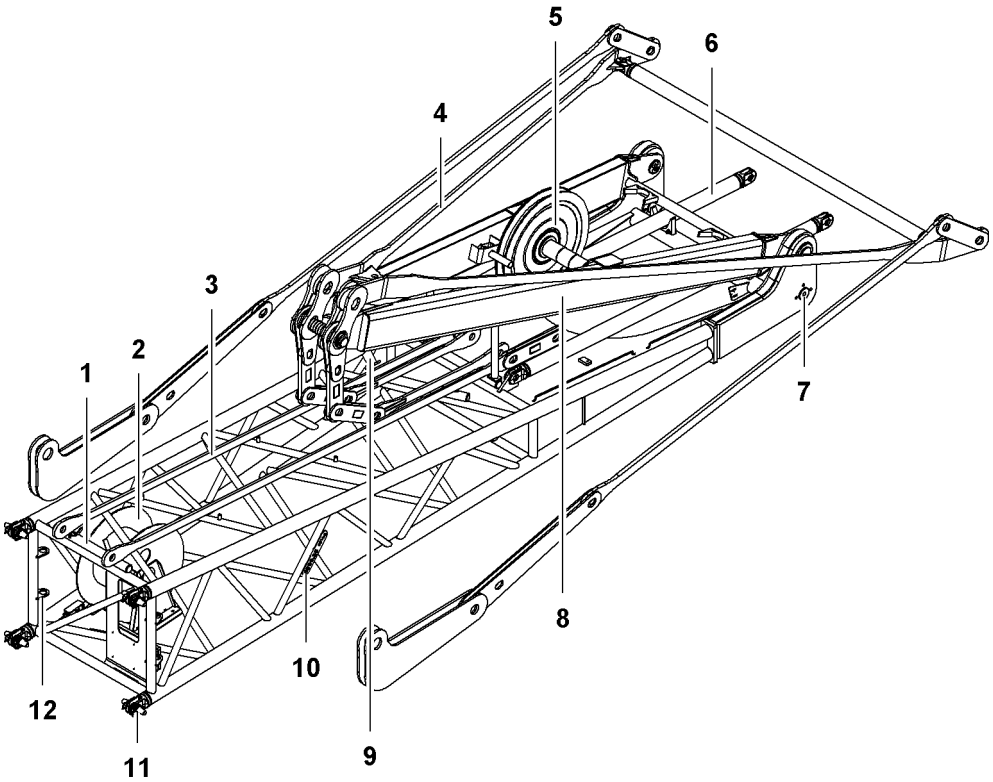

Fig. 286: Jib base section 1008.20

1	Rope guard support (2x)	**7**	Pivot point (2x) for main boom head section
2	Cable drum	**8**	A-frame 2
3	Transport position of jib pendant straps (2x)	**9**	Lifting point (6x)
4	Transport position of the equalizer on A-frame 2 (jib backstay strap)	**10**	Boom identification plate
5	Pulley for rope of winch1/winch2	**11**	Pin connection point (4x) with double-taper pins (4x)
6	Rigid tilting-back support (2x)	**12**	Transport bracket (4x) for double-taper pins

LWN/LR.x/V03.01//Auslieferung/2015-06-03/en

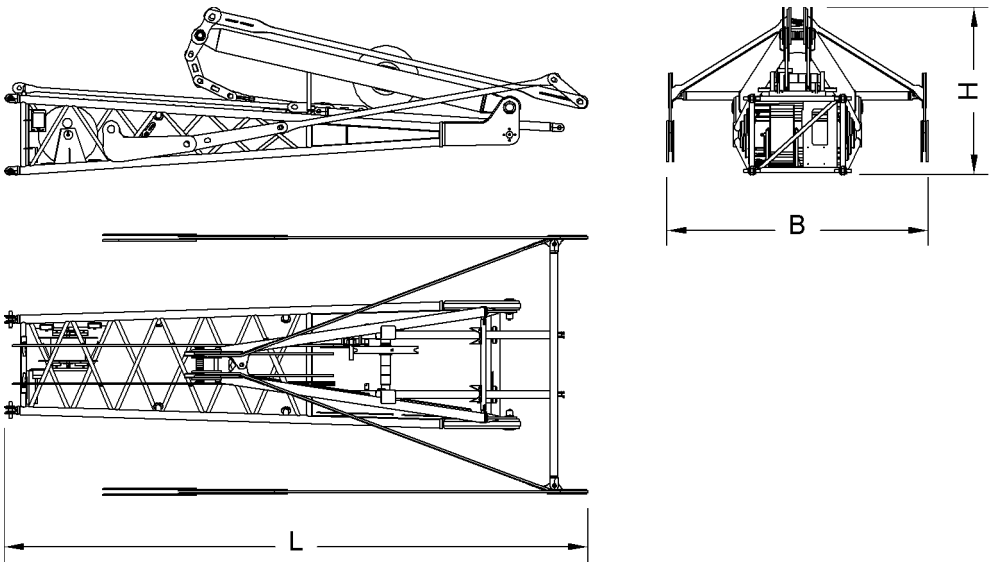

Fig. 287: Dimensions of jib base section 1008.20

Name		Value
System length		5500 mm 18‘ 1“ ft-in
System width		1000 mm 3‘ 3“ ft-in
System height		800 mm 2‘ 7“ ft-in
L	Length	6620 mm 21‘ 9“ ft-in
B	Width	2200 mm 7‘ 3“ ft-in
H	Height	1850 mm 6‘ 1“ ft-in
Weight (incl. pendant straps, tilting-back supports and jib backstay straps)		1950 kg 4,299 lb
Double-taper pins Ø		40 mm 1.57“ in

Tab. 171: Technical data jib base section 1008.20

LWN/LR.x/V03.01//Auslieferung/2015-06-03/en

copyright by
LIEBHERR

1.17.2 1008.17 jib section 3 m (10 ft)

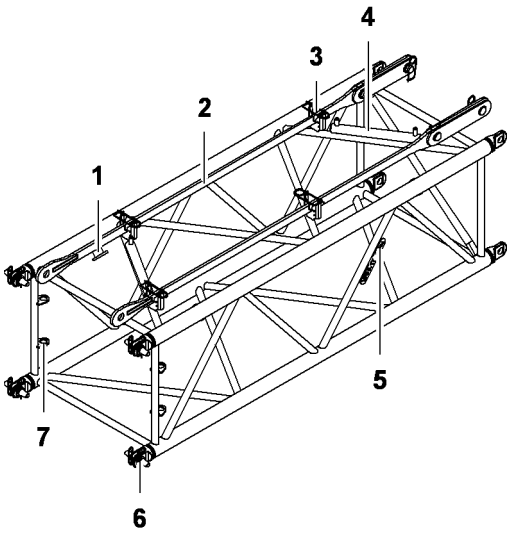

Fig. 288: 1008.17 jib section 3 m (10 ft)

1 Lifting point (4x)
2 Transport position (2x) of the jib pendant straps 3 m (10 ft)
3 Transport brackets (4x) for pendant straps
4 Rope guard support (2x)
5 Boom identification plate
6 Pin connection point (8x) with double-taper pins (4x)
7 Transport bracket (4x) for double-taper pins

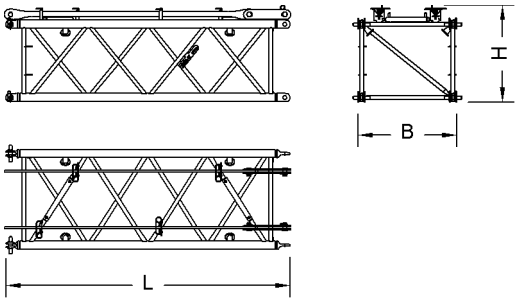

Fig. 289: Dimensions of 1008.17 jib section 3 m (10 ft)

Name		Value
System length		3000 mm 9‘ 10“ ft-in
System width		1000 mm 3‘ 3“ ft-in
System height		800 mm 2‘ 7“ ft-in
L	Length	3120 mm 10‘ 3“ ft-in
B	Width	1090 mm 3‘ 7“ ft-in
H	Height (incl. pendant straps)	1020 mm 3‘ 4“ ft-in

LWN/LR.x/V03.01//Auslieferung/2015-06-03/en

copyright by
LIEBHERR

Name	Value
Weight (incl. pendant straps)	300 kg 661 lb
Double-taper pins Ø	40 mm 1.57“ in

Tab. 172: Technical data for 1008.17 jib section 3 m (10 ft)

1.17.3 1008.17 jib section 6 m (20 ft)

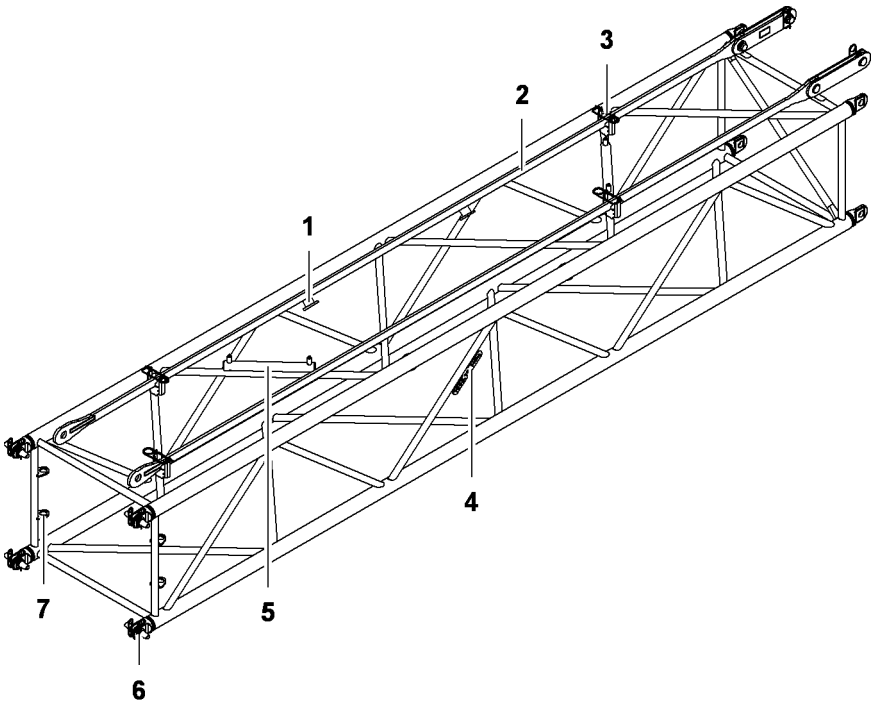

Fig. 290: 1008.17 jib section 6 m (20 ft)

1 Lifting point (4x)
2 Transport position (2x) of the jib pendant straps 6 m (20 ft)
3 Transport brackets (4x) for pendant straps
4 Boom identification plate
5 Rope guard support (2x)
6 Pin connection point (8x) with double-taper pins (4x)
7 Transport bracket (4x) for double-taper pins

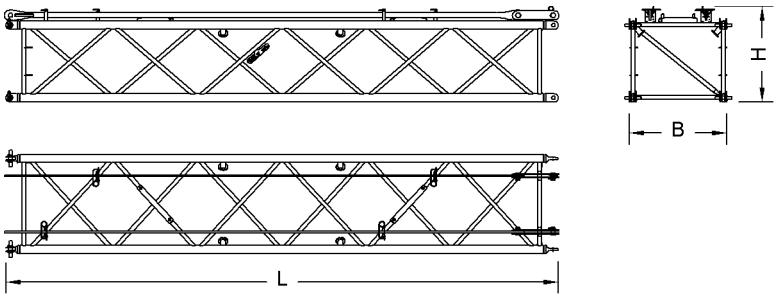

Fig. 291: Dimensions of 1008.17 jib section 6 m (20 ft)

LWN/LR.x/V03.01//Auslieferung/2015-06-03/en

copyright by
LIEBHERR

Name		Value
System length		6000 mm 19‘ 8“ ft-in
System width		1000 mm 3‘ 3“ ft-in
System height		800 mm 2‘ 7“ ft-in
L	Length	6120 mm 20‘ 1“ ft-in
B	Width	1090 mm 3‘ 7“ ft-in
H	Height (incl. pendant straps)	1020 mm 3‘ 4“ ft-in
Weight (incl. pendant straps)		455 kg 1,003 lb
Double-taper pins Ø		40 mm 1.57“ in

Tab. 173: Technical data for 1008.17 jib section 6 m (20 ft)

1.17.4 1008.20 jib head section

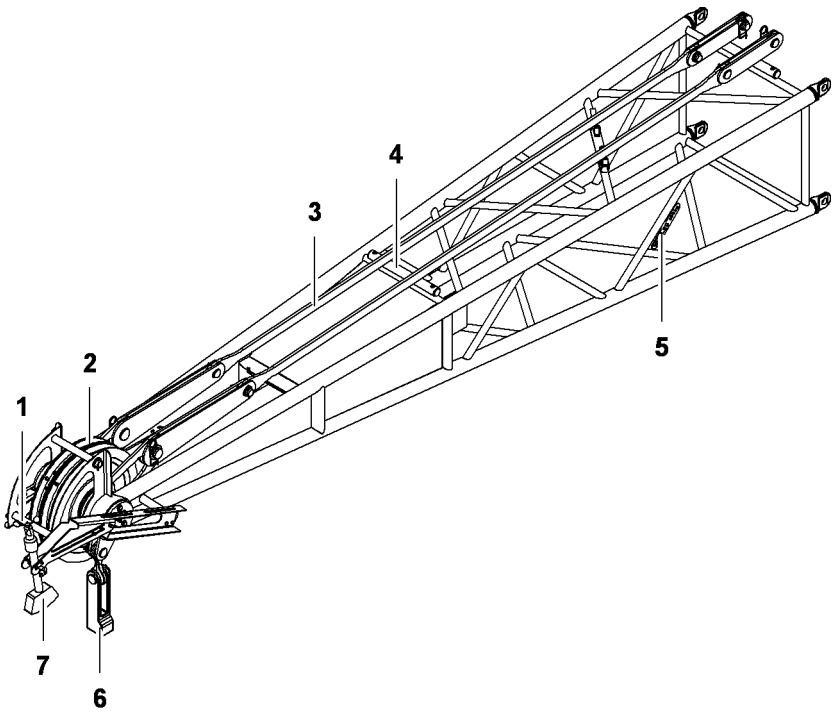

Fig. 292: 1008.20 jib head section

1 Rope protection pipe (2x)
2 Pulley (2x)
3 Transport position (2x) of jib pendant straps
4 Rope guard support (2x)
5 Boom identification plate
6 Rope fixation
7 Anemometer

LWN/LR.x/V03.01//Auslieferung/2015-06-03/en

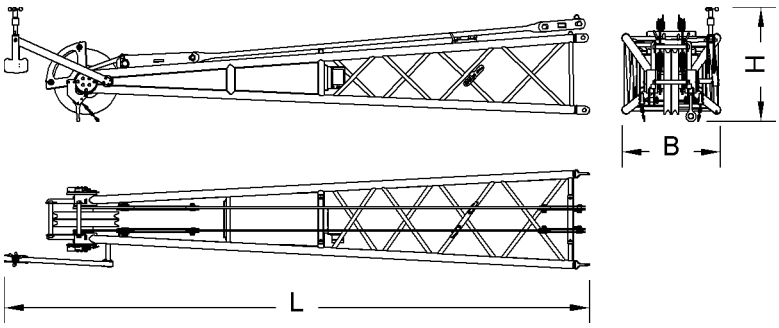

Fig. 293: 1008.20 jib head section dimensions

Name		Value
System length		5500 mm 18‘ 1“ ft-in
System width		1000 mm 3‘ 3“ ft-in
System height		800 mm 2‘ 7“ ft-in
L	Length	6500 mm 21‘ 4“ ft-in
B	Width	1090 mm 3‘ 7“ ft-in
H	Height	1020 mm 3‘ 4“ ft-in
Weight (incl. pendant straps)		920 kg 2,028 lb

Tab. 174: 1008.20 jib head section, technical data

1.17.5 Steel pendant straps on fixed jib 1008

Steel pendant straps on A-frame2

Equalizer A-frame2 (jib backstay strap)

Installation site in crane operation:
– Fixed jib 1008 (For more information see: Jib backstay straps A-frame2 to main boom head 2821, page 1510)

LWN/LR.x/V03.01//Auslieferung/2015-06-03/en

copyright by
LIEBHERR

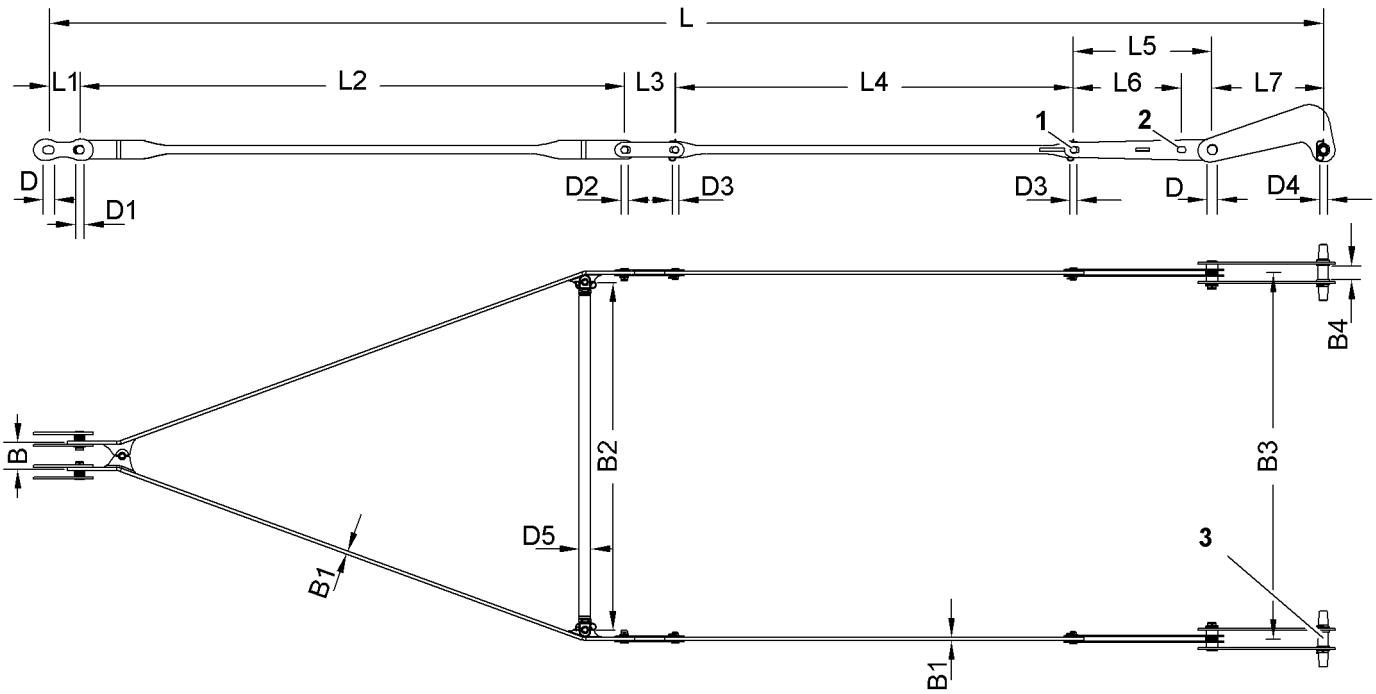

Fig. 294: Dimensions equalizer on A-frame2 (jib backstay strap)

1 Pin connection point 30° (30°) **2** Pin connection point 15° (15°) **3** Double-taper pins 431 mm (1‘ 5“ ft-in)/ Ø80 mm (3.15“ in) (2x)

The double-taper pins (431 mm (1‘ 5“ ft-in) x Ø80 mm (3.15“ in)) **3** replace the top double-taper pins on the main boom head.

Name		Value
L	Length	at 30° (30°) 9760 mm 32‘ ft-in
		at 15° (15°) 8943 mm 29‘ 4“ ft-in
L1	Length of connecting link	250 mm 9.84“ in
L2	Length of crossbar	4165 mm 13‘ 8“ ft-in
L3	Length of connecting link	390 mm 1‘ 3“ ft-in
L4	Length of pendant strap	3045 mm 10‘ ft-in
L5	Length of connecting link (30° (30°))	1060 mm 3‘ 6“ ft-in
L6	Length of connecting link (15° (15°))	817 mm 2‘ 8“ ft-in
L7	Length of connecting link	850 mm 2‘ 9“ ft-in

LWN/LR.x/V03.01//Auslieferung/2015-06-03/en

copyright by
LIEBHERR

Name		Value
W	Width	200 mm 7.87“ in
W1	Width of pendant strap	22 mm 0.87“ in
W2	Width	2660 mm 8‘ 9“ ft-in
W3	Width	108 mm 4.25“ in
W4	Width	2800 mm 9‘ 2“ ft-in
H	Height of pendant strap	62 mm 2.44“ in
D	Pin Ø	65 mm 2.56“ in
D1	Pin Ø	60 mm 2.36“ in
D2	Pin Ø	50 mm 1.97“ in
D3	Pin Ø	45 mm 1.77“ in
D4	Double-taper pins Ø	80 mm 3.15“ in
D5	Spacer bar Ø	90 mm 3.54“ in
Weight		548 kg 1,208 lb

Tab. 175: Technical data equalizer on A-frame2 (jib backstay strap)

Equalizer on A-frame2 (jib pendant strap)

Installation site in crane operation:
– Fixed jib 1008 (For more information see: Pendant straps A-frame2 to jib head 1008, page 1510)

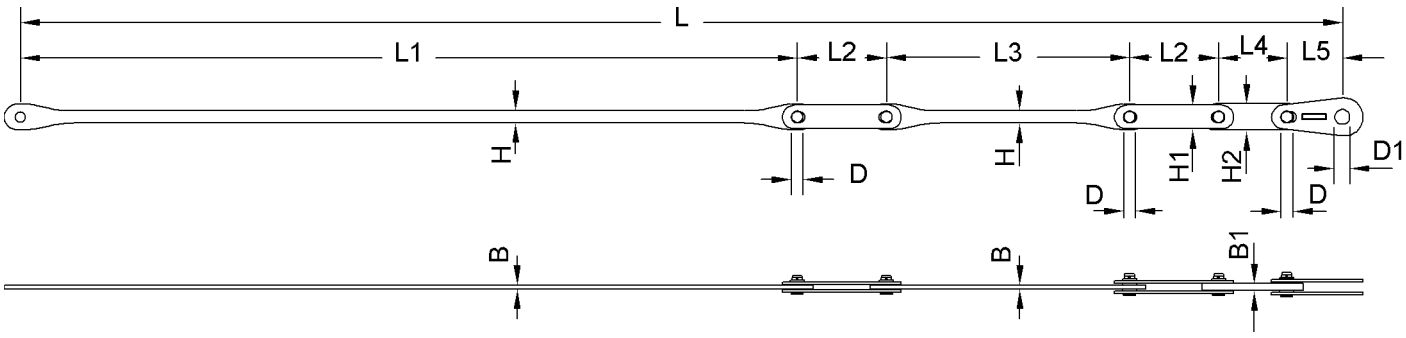

Fig. 295: Dimensions of equalizer on A-frame2 (jib pendant strap)

LWN/LR.x/V03.01//Auslieferung/2015-06-03/en

copyright by
LIEBHERR

Name		Value
L	Length	5785 mm 19‘ ft-in
L1	Length of pendant strap	3400 mm 11‘ 2“ ft-in
L2	Length of connecting link	390 mm 1‘ 3“ ft-in
L3	Length of pendant strap	1064 mm 3‘ 6“ ft-in
L4	Length of connecting link	298 mm 1‘ ft-in
L5	Length of connecting link	243 mm 9.57“ in
W	Width of pendant strap	18 mm 0.71“ in
W1	Width of connecting link	30 mm 1.18“ in
H	Height of pendant strap	54 mm 2.13“ in
H1	Height of connecting link	103 mm 4.06“ in
H2	Height of connecting link	116 mm 4.57“ in
D	Pin Ø	45 mm 1.77“ in
D1	Pin Ø	65 mm 2.56“ in
Weight		85 kg 187 lb

Tab. 176: Technical data equalizer on A-frame2 (jib pendant strap)

Steel pendant straps on jib section 1008.17 3 m (10 ft)

Jib pendant strap 3 m (10 ft)

Installation site in crane operation:
– Fixed jib 1008 (For more information see: Pendant straps A-frame2 to jib head 1008, page 1510)

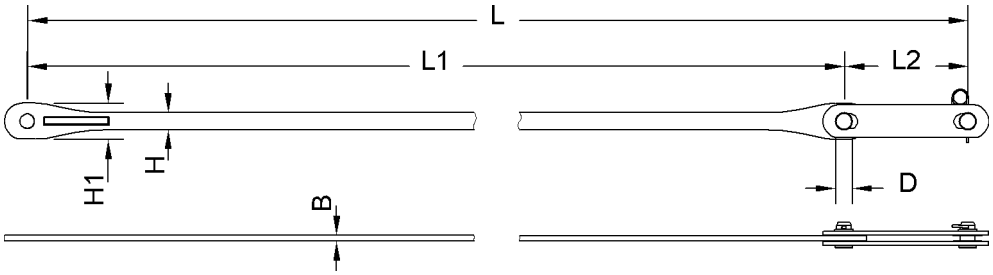

Fig. 296: Dimensions jib pendant strap 3 m (10 ft)

LWN/LR.x/V03.01//Auslieferung/2015-06-03/en

Name		Value
L	Length	3000 mm 9‘ 10“ ft-in
L1	Length of pendant strap	2610 mm 8‘ 7“ ft-in
L2	Length of connecting link	390 mm 1‘ 3“ ft-in
W	Width of pendant strap	18 mm 0.71“ in
H	Height of pendant strap	54 mm 2.13“ in
H1	Height of pendant strap	113 mm 4.45“ in
D	Pin Ø	45 mm 1.77“ in
Weight		48 kg 106 lb

Tab. 177: Technical data jib pendant strap 3 m (10 ft)

Steel pendant straps on jib section 1008.17 6 m (20 ft)

Jib pendant strap 6 m (20 ft)

Installation site in crane operation:
– Fixed jib 1008 (For more information see: Pendant straps A-frame2 to jib head 1008, page 1510)

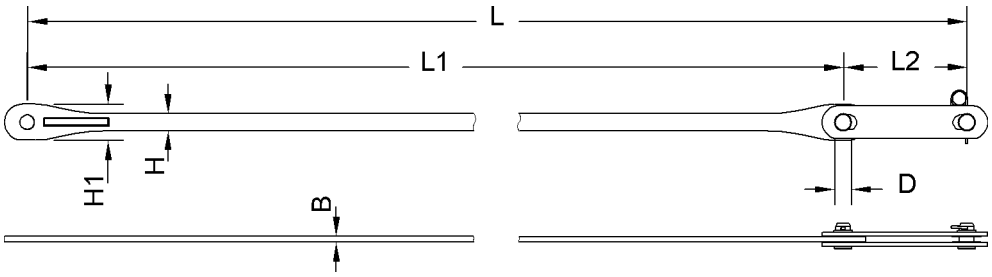

Fig. 297: Dimensions jib pendant strap 6 m (20 ft)

Name		Value
L	Length	6000 mm 19‘ 8“ ft-in
L1	Length of pendant strap	5610 mm 18‘ 5“ ft-in
L2	Length of connecting link	390 mm 1‘ 3“ ft-in
W	Width of pendant strap	18 mm 0.71“ in

LWN/LR.x/V03.01//Auslieferung/2015-06-03/en

copyright by
LIEBHERR

Name		Value
H	Height of pendant strap	54 mm 2.13“ in
H1	Height of pendant strap	113 mm 4.45“ in
D	Pin Ø	45 mm 1.77“ in
Weight		58 kg 128 lb

Tab. 178: Technical data jib pendant strap 6 m (20 ft)

Steel pendant straps on jib head 1008.20

Jib pendant strap on jib head 1008.20

Installation site in crane operation:
– Fixed jib 1008 (For more information see: Pendant straps A-frame2 to jib head 1008, page 1510)

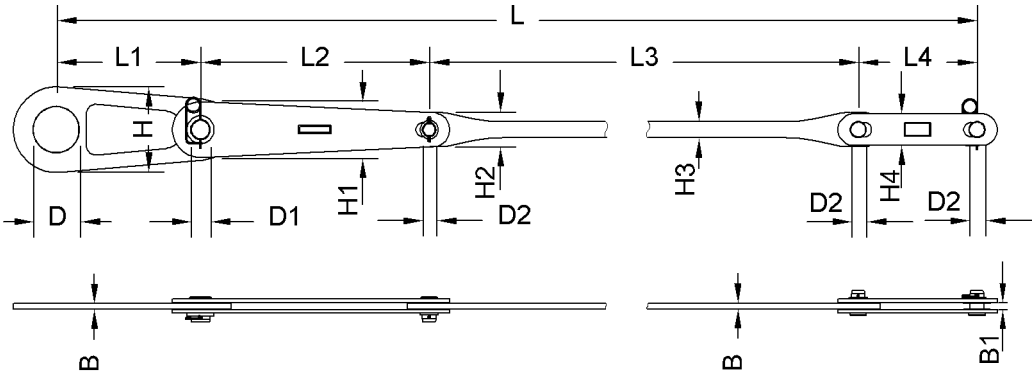

Fig. 298: Dimensions jib pendant strap on jib head 1008.20

Name		Value
L	Length	5515 mm 18‘ 1“ ft-in
L1	Length of connecting link	474 mm 1‘ 7“ ft-in
L2	Length of connecting link	751 mm 2‘ 6“ ft-in
L3	Length of pendant strap	3900 mm 12‘ 10“ ft-in
L4	Length of connecting link	390 mm 1‘ 3“ ft-in
W	Width of pendant strap	18 mm 0.71“ in
W1	Width	22 mm 0.87“ in

LWN/LR.x/V03.01//Auslieferung/2015-06-03/en

copyright by
LIEBHERR

Name		Value
H	Height of connecting link	280 mm 11.02“ in
H1	Height of connecting link	182 mm 7.17“ in
H2	Height of pendant strap	113 mm 4.45“ in
H3	Height of pendant strap	54 mm 2.13“ in
H4	Height of connecting link	103 mm 4.06“ in
D	Pin Ø	150 mm 5.91“ in
D1	Pin Ø	65 mm 2.56“ in
D2	Pin Ø	45 mm 1.77“ in
Weight		78 kg 172 lb

Tab. 179: Technical data jib pendant strap on jib head 1008.20

1.17.6 CF pendant straps on fixed jib 1008

When installing the fixed jib 1008 on the machine with CF pendant straps, use the steel pendant straps and the steel backstay straps (For more information see: 1.17.5 Steel pendant straps on fixed jib 1008, page 273) .

LWN/LR.x/V03.01//Auslieferung/2015-06-03/en

copyright by
LIEBHERR

1.18 0906 fixed jib

1.18.1 Jib 0906.21

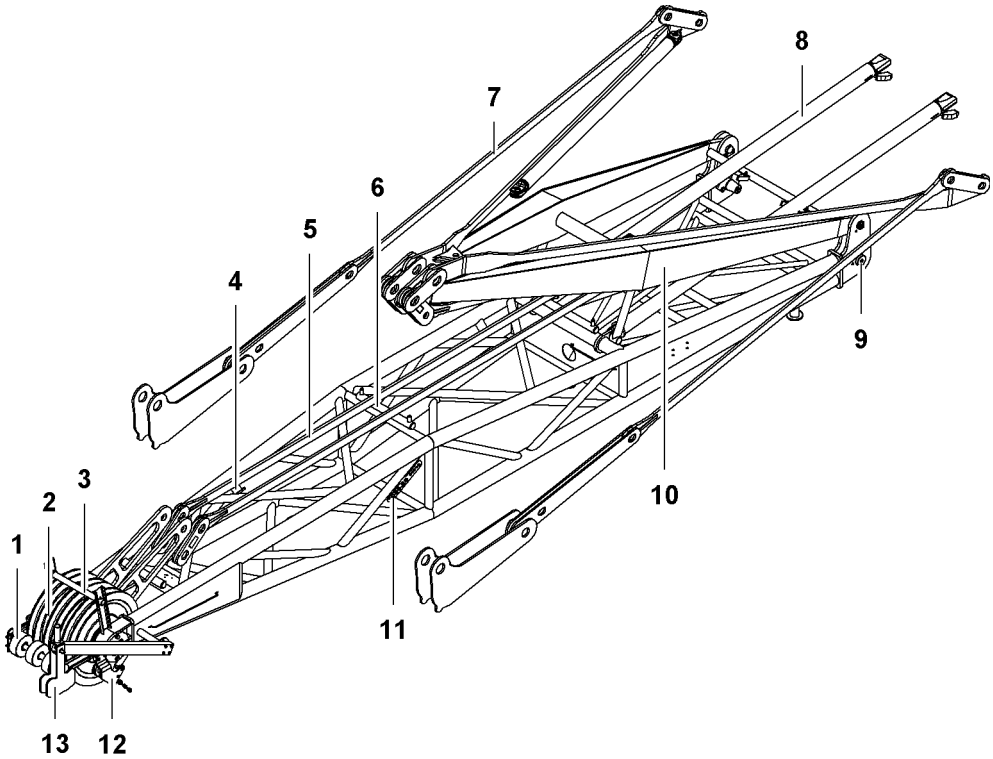

Fig. 299: Jib 0906.21

1	Rope protection roller (3x)	**8**	Rigid tilting-back support (2x)
2	Pulley (3x)	**9**	Pivot point (2x) for main boom head section
3	Rope protection pipe	**10**	A-frame 2
4	Lifting point (4x)	**11**	Boom identification plate
5	Transport position (2x) of jib pendant straps	**12**	Hoist limit switch
6	Rope protection support (3x)	**13**	Anemometer
7	Transport position of the equalizer on A-frame 2 (jib backstay strap)		

LWN/LR.x/V03.01//Auslieferung/2015-06-03/en

copyright by
LIEBHERR

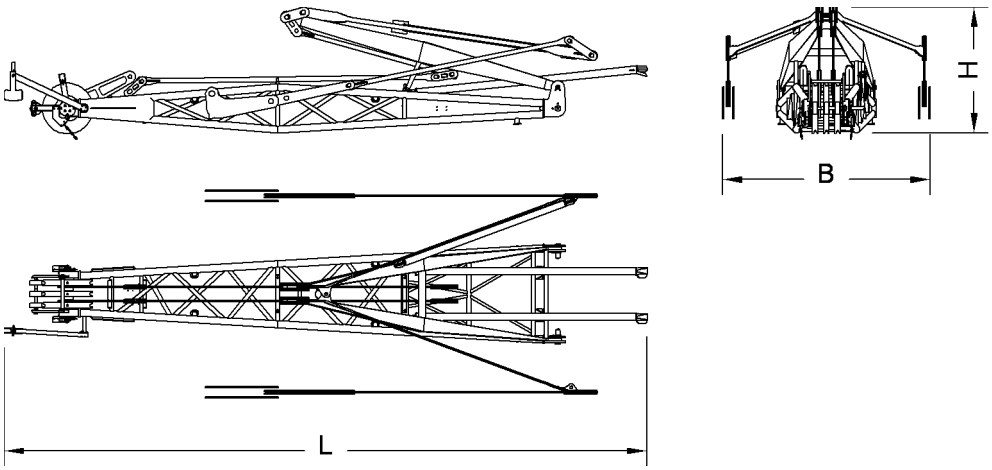

Fig. 300: Dimensions jib 0906.21

Name		Value
System length		7000 mm 23‘ ft-in
System width		900 mm 2‘ 11“ ft-in
System height		600 mm 2‘ ft-in
L	Length	9190 mm 30‘ 2“ ft-in
B	Width	2960 mm 9‘ 9“ ft-in
H	Height	1800 mm 5‘ 11“ ft-in
Weight (incl. pendant straps, tilting-back supports and jib backstay straps)		2388 kg 5,265 lb

Tab. 180: Technical data jib 0906.21

1.18.2 Steel pendant straps on fixed jib 0906

Steel pendant straps on A-frame2

Equalizer A-frame2 (jib backstay strap)

Installation site in crane operation:
– Fixed jib 0906 (For more information see: Jib backstay straps A-frame2 to main boom head 2821, page 1520)

LWN/LR.x/V03.01//Auslieferung/2015-06-03/en

copyright by
LIEBHERR

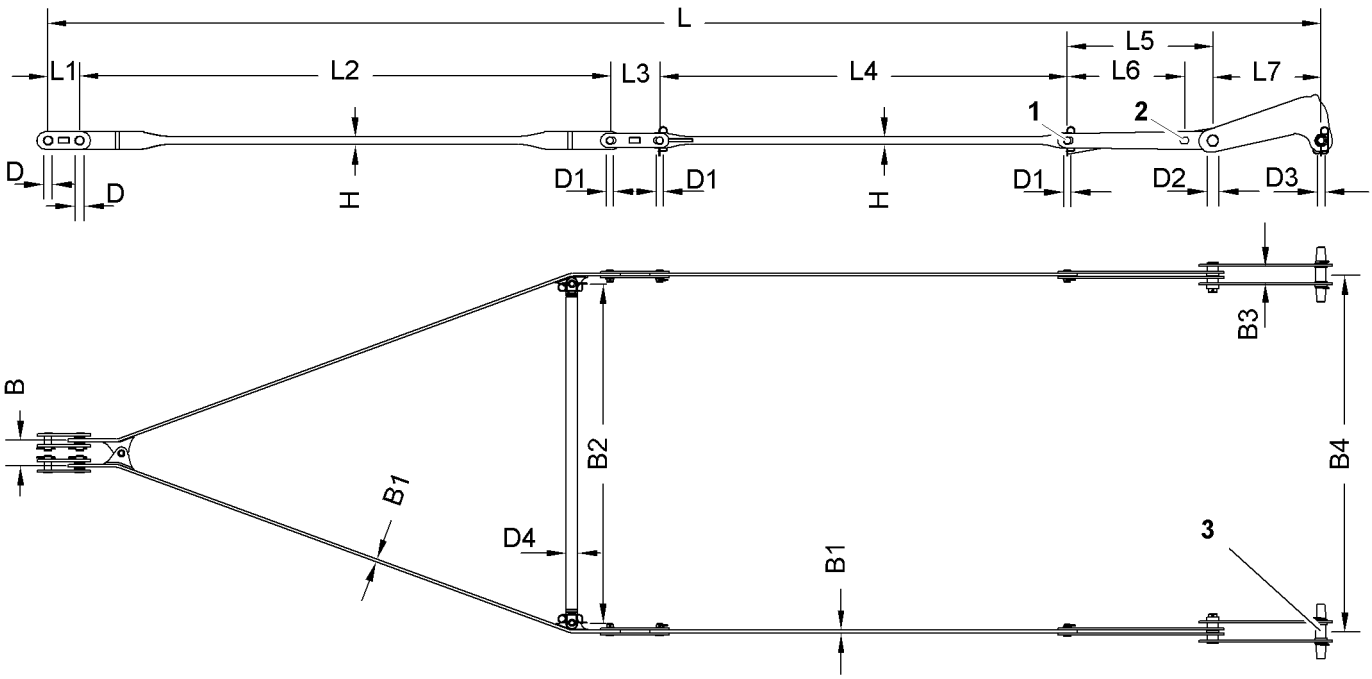

Fig. 301: Dimensions equalizer on A-frame2 (jib backstay strap)

1 Pin connection point 30° (30°)

2 DO NOT use pin connection point

3 Double-taper pins 431 mm (1‘ 5“ ft-in)/ Ø80 mm (3.15“ in) (2x)

The double-taper pins (431 mm (1‘ 5“ ft-in) x Ø80 mm (3.15“ in)) **3** replace the top double-taper pins on the main boom head.

Name		Value
L	Length	at 30° (30°) 10000 mm 32‘ 10“ ft-in
L1	Length of connecting link	250 mm 9.84“ in
L2	Length of crossbar	4165 mm 13‘ 8“ ft-in
L3	Length of connecting link	390 mm 1‘ 3“ ft-in
L4	Length of pendant strap	3202 mm 10‘ 6“ ft-in
L5	Length of connecting link (30° (30°))	1143 mm 3‘ 9“ ft-in
L6	Length of connecting link (DO NOT use pin connection point)	910 mm 3‘ ft-in
L7	Length of connecting link	850 mm 2‘ 9“ ft-in
W	Width	200 mm 7.87“ in
W1	Width of pendant strap	22 mm 0.87“ in

LWN/LR.x/V03.01//Auslieferung/2015-06-03/en

copyright by
LIEBHERR

Name		Value
W2	Width	2660 mm 8‘ 9“ ft-in
W3	Width	132 mm 5.20“ in
W4	Width	2800 mm 9‘ 2“ ft-in
H	Height of pendant strap	62 mm 2.44“ in
D	Pin Ø	60 mm 2.36“ in
D1	Pin Ø	50 mm 1.97“ in
D2	Pin Ø	70 mm 2.76“ in
D3	Double-taper pins Ø	80 mm 3.15“ in
D4	Spacer bar Ø	90 mm 3.54“ in
Weight		582 kg 1,283 lb

Tab. 181: Technical data equalizer on A-frame2 (jib backstay strap)

Jib pendant strap (A-frame2 to jib head 0906.21)

Installation site in crane operation:
– Fixed jib 0906 (For more information see: Pendant straps A-frame2 to jib head 0906, page 1520)

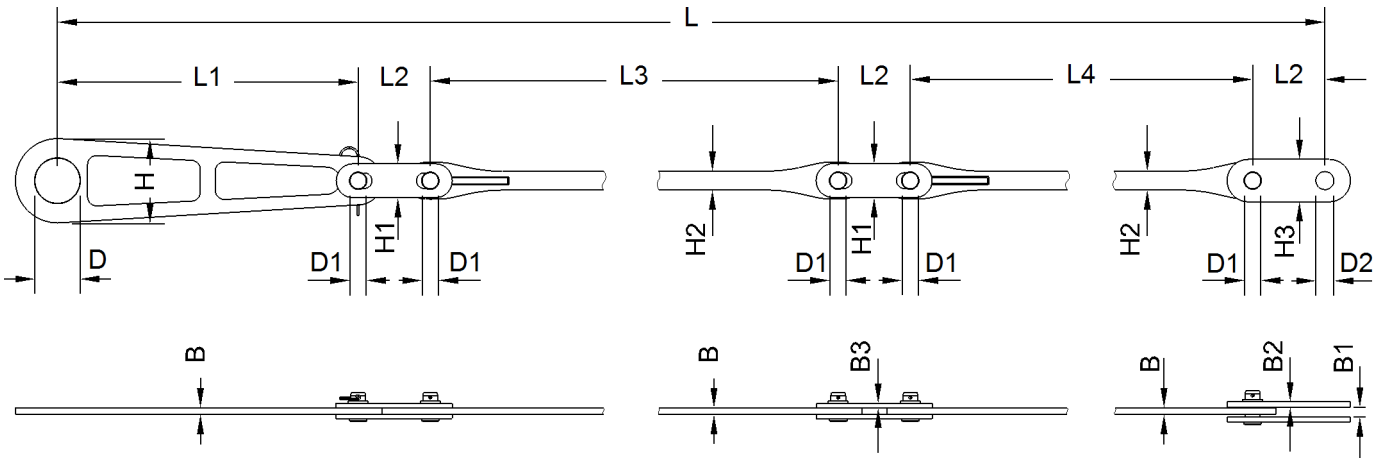

Fig. 302: Dimensions jib pendant strap (A-frame2 to jib head 0906.21)

Name		Value
L	Length	8235 mm 27‘ ft-in

LWN/LR.x/V03.01//Auslieferung/2015-06-03/en

copyright by
LIEBHERR

Name		Value
L1	Length of connecting link	1000 mm 3‘ 3“ ft-in
L2	Length of connecting link	240 mm 9.45“ in
L3	Length of pendant strap	4200 mm 13‘ 9“ ft-in
L4	Length of connecting link	2315 mm 7‘ 7“ ft-in
W	Width of pendant strap	22 mm 0.87“ in
W1	Width	30 mm 1.18“ in
H	Height of connecting link	280 mm 11.02“ in
H1	Height of connecting link	113 mm 4.45“ in
H2	Height of pendant strap	62 mm 2.44“ in
H3	Height of connecting link	141 mm 5.55“ in
D	Pin Ø	150 mm 5.91“ in
D1	Pin Ø	50 mm 1.97“ in
D2	Pin Ø	60 mm 2.36“ in
Weight		134 kg 295 lb

Tab. 182: Technical data jib pendant strap (A-frame2 to jib head 0906.21)

1.18.3 CF pendant straps on fixed jib 0906

When installing the fixed jib 0906 on the machine with CF pendant straps, use the steel pendant straps and the steel backstay straps (For more information see: 1.18.2 Steel pendant straps on fixed jib 0906, page 281) .

LWN/LR.x/V03.01//Auslieferung/2015-06-03/en

copyright by
LIEBHERR

1.19 Luffing jib - overview

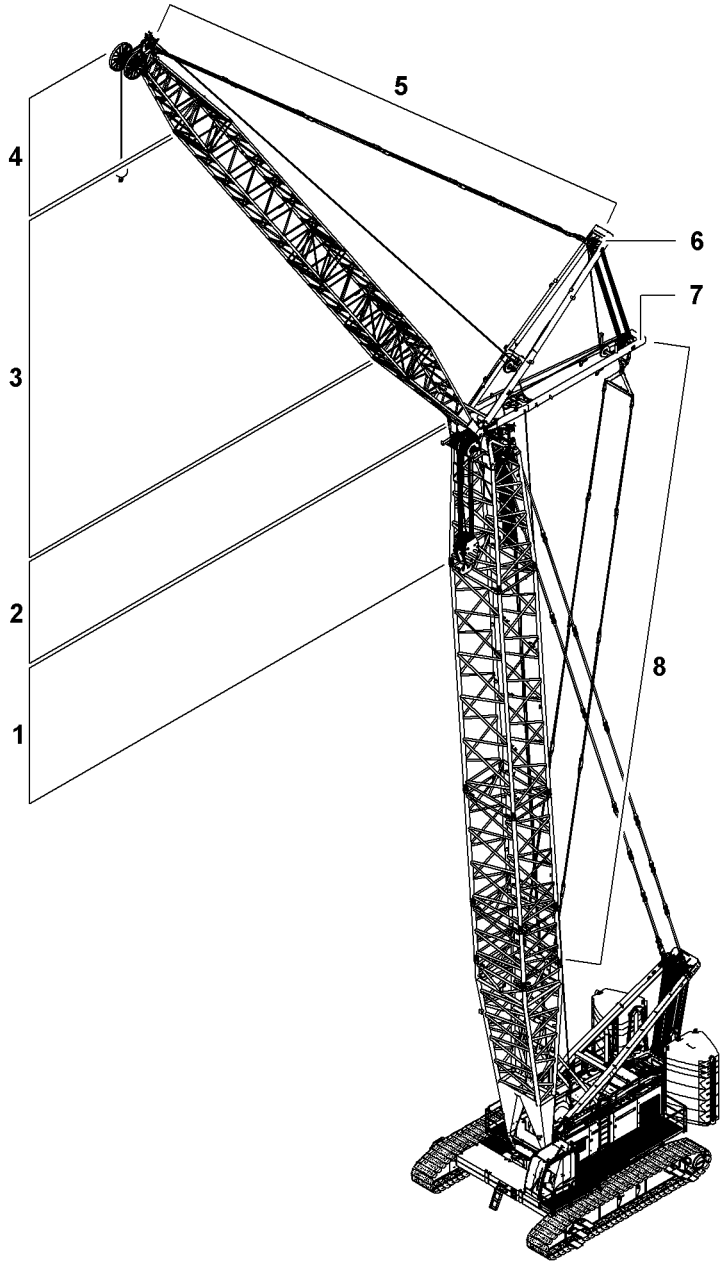

Fig. 303: Luffing jib - overview

1	Main boom head	**5**	Jib pendant straps
2	Jib base section	**6**	A-frame3
3	Jib sections	**7**	A-frame2
4	Jib head	**8**	Jib backstay straps

The luffing jib is composed of:
– Jib base section **2**
– Jib sections (3 m (10 ft), 6 m (20 ft), 12 m (40 ft)) **3**
– Jib head section **4**

The jib pendant straps **5** connect A-frame 3 **6** to the jib head section **4**.

The jib backstay straps **8** connect A-frame 2 **7** to the boom base section.

LWN/LR.x/V03.01//Auslieferung/2015-06-03/en

copyright by
LIEBHERR

1.20 2316 luffing jib

1.20.1 Jib base section 2316.22

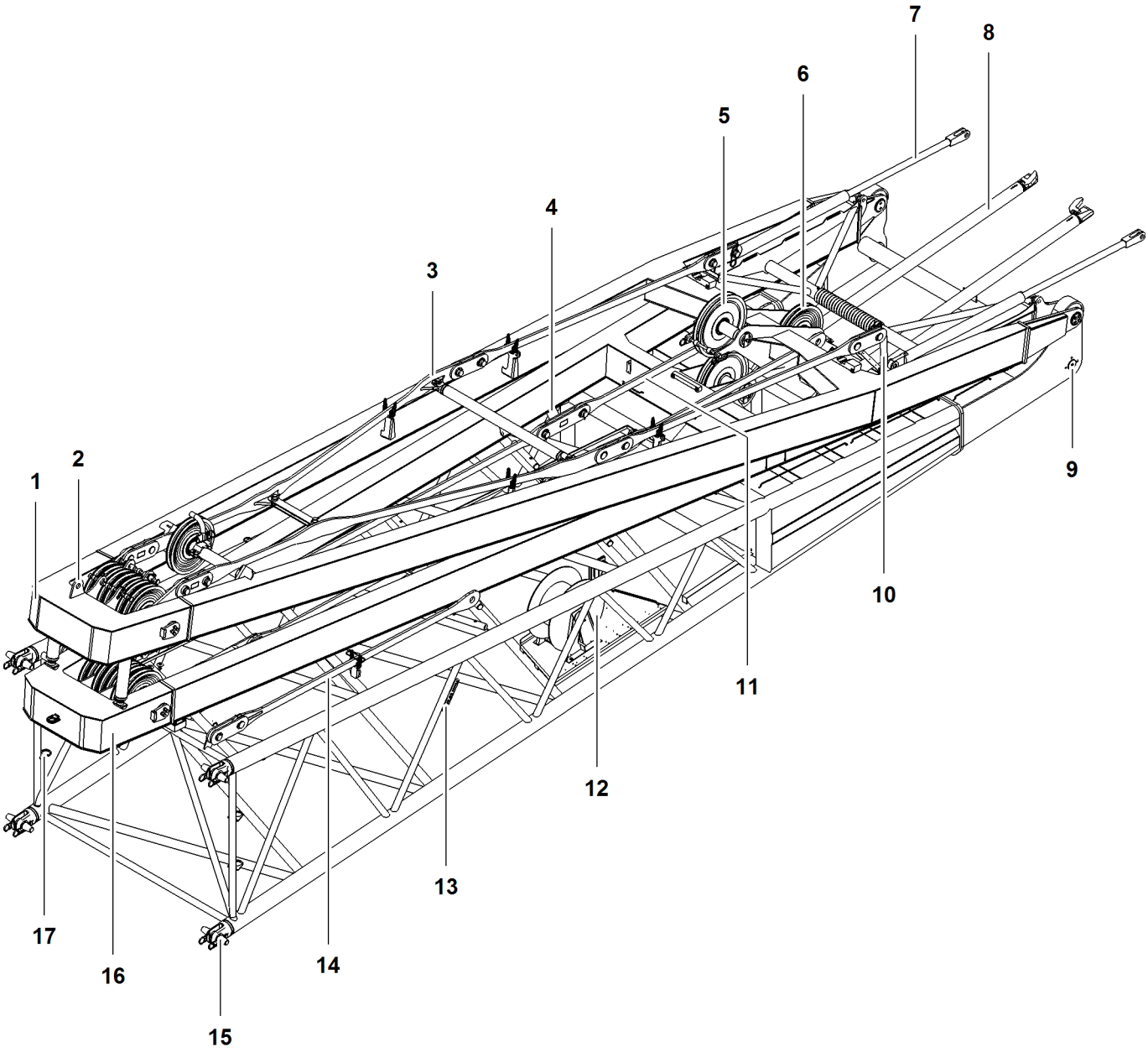

Fig. 304: Jib base section 2316.22

1	A-frame2	**7**	Rigid tilting-back support (2x)	**13**	Boom identification plate
2	Shackle	**8**	Hydraulic tilting-back support (2x)	**14**	Transport position (2x) for 3 m (10 ft) pendant strap
3	Transport position of A-frame2 equalizer (jib backstay straps)	**9**	Pivot point (2x) for main boom head	**15**	Pin connection point (4x) with double-taper pin (4x)
4	Rigging point (4x)	**10**	Transport brackets (2x) of A-frame2 equalizer	**16**	A-frame3

See next page for continuation of the image legend

LWN/LR.x/V03.01//Auslieferung/2015-06-03/en

copyright by
LIEBHERR

5 Pulley (2x) for rope of winch1/ winch2

6 Pulley (2x) for rope of jib luffing winch

11 Transport position of A-frame3 equalizer (jib pendant strap)

12 Cable drum

17 Transport bracket (4x) for double-taper pins

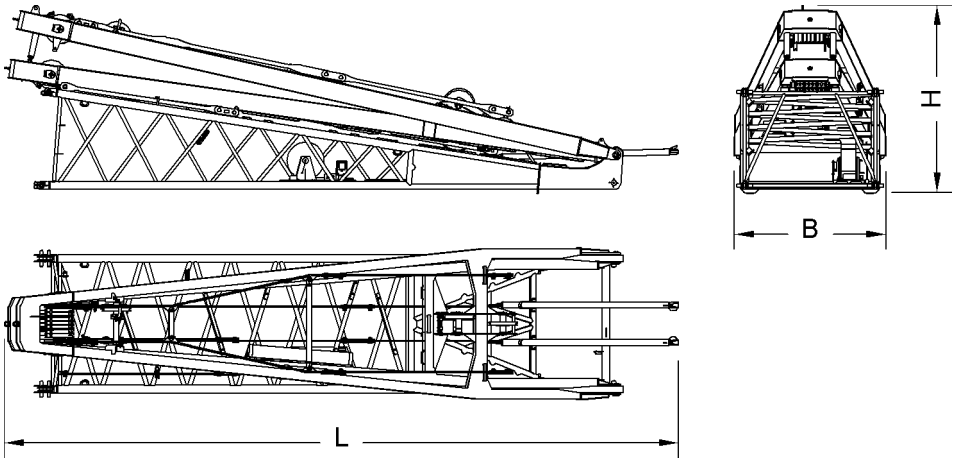

Fig. 305: Dimensions of jib base section 2316.22

Name		Value
System length		10000 mm 32‘ 10“ ft-in
System width		2290 mm 7‘ 6“ ft-in
System height		1650 mm 5‘ 5“ ft-in
L	Length	11720 mm 38‘ 5“ ft-in
B	Width	2670 mm 8‘ 9“ ft-in
H	Height	3300 mm 10‘ 10“ ft-in
Weight (incl. pendant straps, tilting-back supports and jib backstay straps)		8060 kg 17,769 lb
Double-taper pins Ø		65 mm 2.56“ in

Tab. 183: Technical data jib base section 2316.22

LWN/LR.x/V03.01//Auslieferung/2015-06-03/en

copyright by
LIEBHERR

1.20.2 2316.20 jib section 3 m (10 ft)

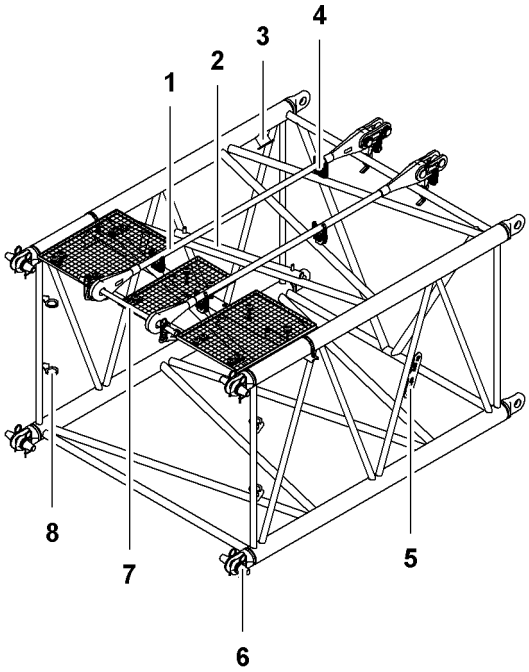

Fig. 306: Jib section 2316.20 3 m (10 ft)

1	Transport position (2x) of jib pendant straps 3 m (10 ft)	**5**	Boom identification plate
2	Rope protection guard	**6**	Pin connection point (8x) with double-taper pin (4x)
3	Rigging point (4x)	**7**	Transport bracket for pendant straps
4	Transport bracket (4x) for pendant straps	**8**	Transport bracket (4x) for double taper pin

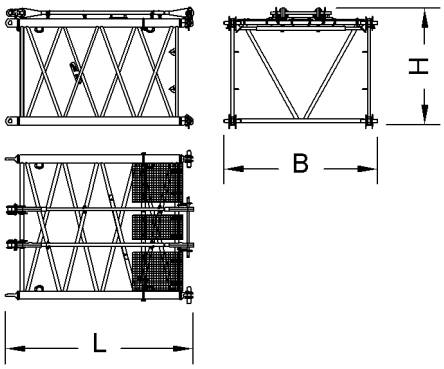

Fig. 307: Dimensions jib section 2316.20 3 m (10 ft)

Name	Value
System length	3000 mm 9‘ 10“ ft-in
System width	2290 mm 7‘ 6“ ft-in

LWN/LR.x/V03.01//Auslieferung/2015-06-03/en

Name		Value
System height		1650 mm 5‘ 5“ ft-in
L	Length	3150 mm 10‘ 4“ ft-in
B	Width	2430 mm 8‘ ft-in
H	Height (incl. pendant straps)	1910 mm 6‘ 3“ ft-in
Weight (incl. pendant straps)		600 kg 1,323 lb
Double-taper pins Ø		65 mm 2.56“ in

Tab. 184: Technical data for 2316.20 jib section 3 m (10 ft)

1.20.3 2316.20 jib section 6 m (20 ft)

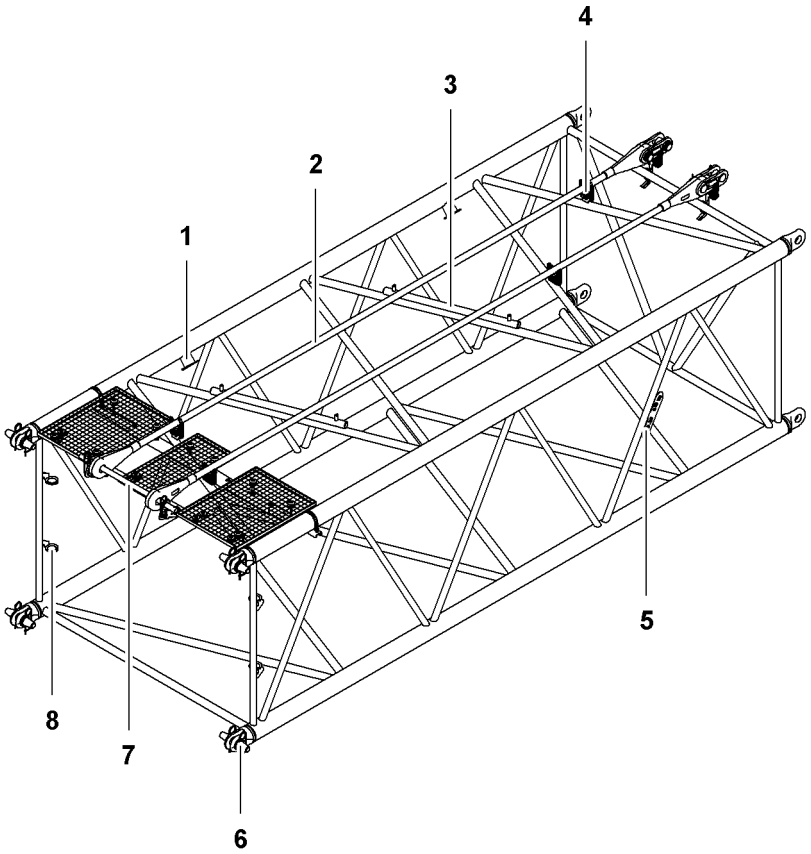

Fig. 308: Jib section 2316.20 6 m (20 ft)

1 Rigging point (4x)
2 Transport position (2x) of jib pendant straps 6 m (20 ft)
3 Rope protection guard (2x)
4 Transport bracket (4x) for pendant straps
5 Boom identification plate
6 Pin connection point (8x) with double-taper pin (4x)
7 Transport bracket for pendant straps
8 Transport bracket (4x) for double taper pin

LWN/LR.x/V03.01//Auslieferung/2015-06-03/en

copyright by
LIEBHERR

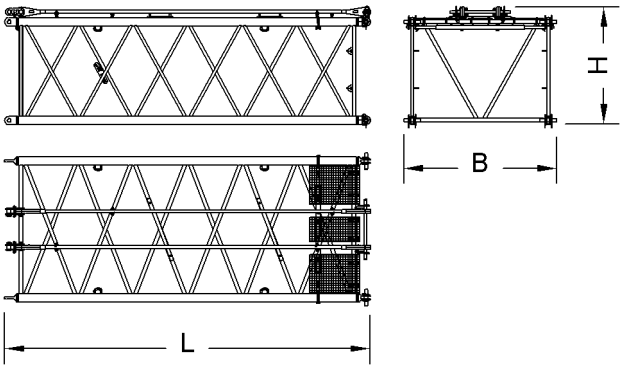

Fig. 309: Dimensions jib section 2316 6 m (20 ft)

Designation		Value
System length		6000 mm 19‘ 8“ ft-in
System width		2290 mm 7‘ 6“ ft-in
System height		1650 mm 5‘ 5“ ft-in
L	Length	6150 mm 20‘ 2“ ft-in
B	Width	2430 mm 8‘ ft-in
H	Height (incl. pendant straps)	1910 mm 6‘ 3“ ft-in
Weight (incl. pendant straps)		950 kg 2,094 lb
Double-taper pins Ø		65 mm 2.56“ in

Tab. 185: Technical data for 2316 jib section 6 m (20 ft)

LWN/LR.x/V03.01//Auslieferung/2015-06-03/en

copyright by
LIEBHERR

1.20.4 2316.20 jib section 12 m (40 ft)

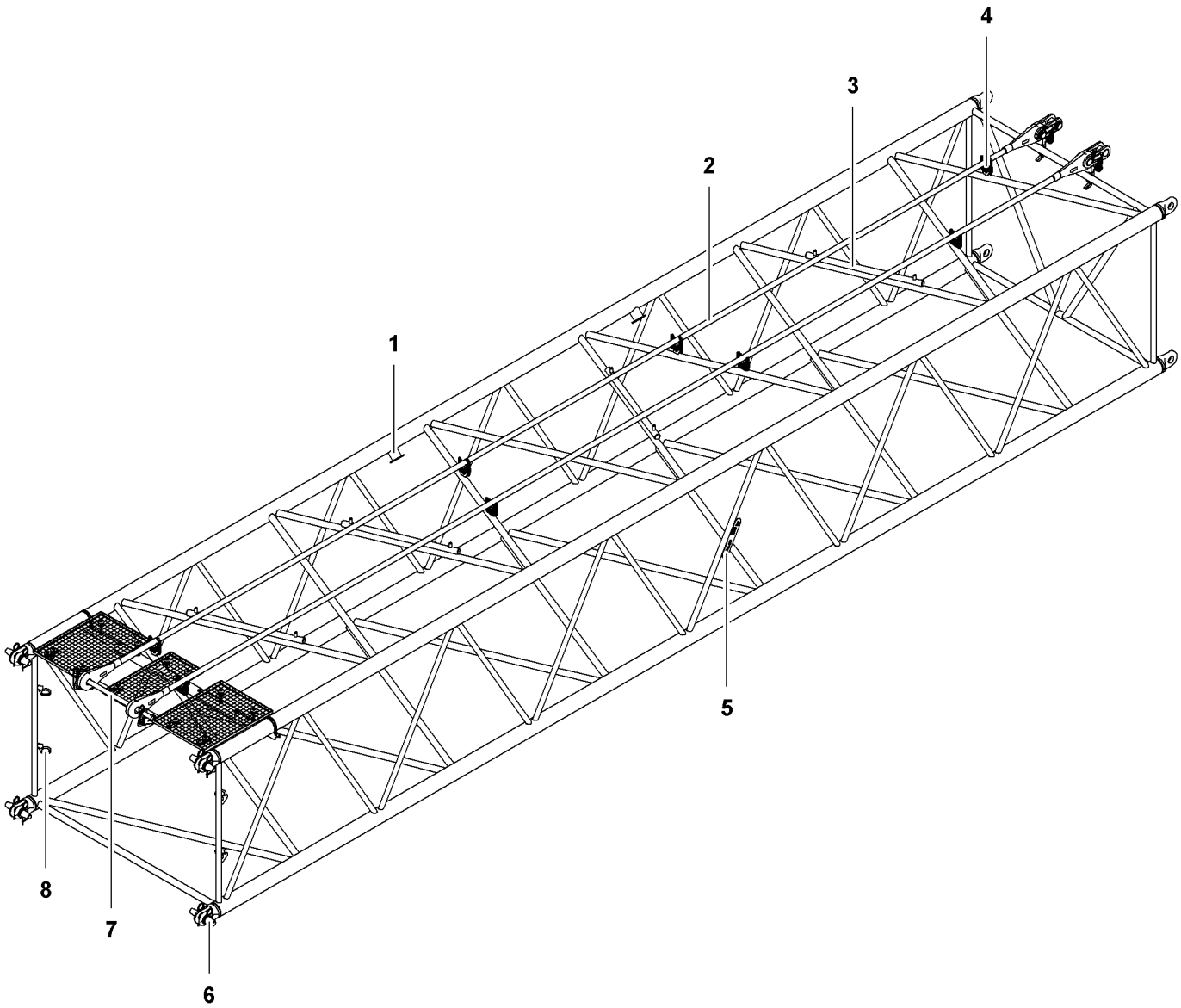

Fig. 310: Jib section 2316.20 12 m (40 ft)

1	Rigging point (4x)	**4**	Transport bracket (8x) for pendant straps	**7**	Transport bracket for pendant straps
2	Transport position (2x) of jib pendant straps 12 m (40 ft)	**5**	Boom identification plate	**8**	Transport bracket (4x) for double taper pin
3	Rope protection guard (3x)	**6**	Pin connection point (8x) with double-taper pin (4x)		

LWN/LR.x/V03.01//Auslieferung/2015-06-03/en

copyright by
LIEBHERR

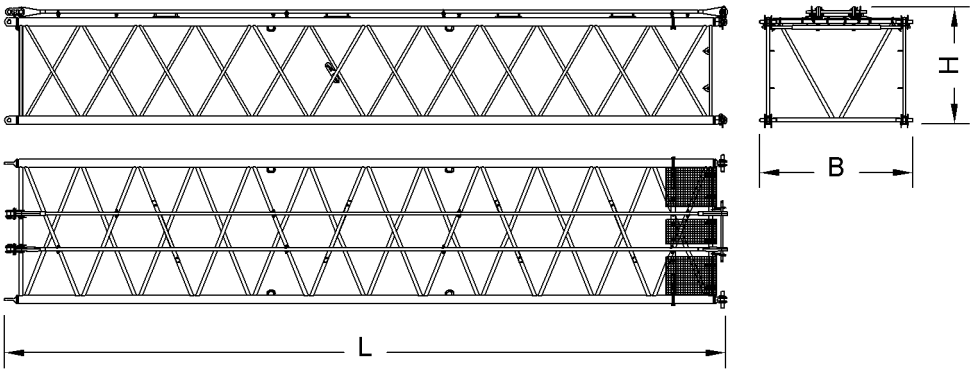

Fig. 311: Dimensions jib section 2316.20 12 m (40 ft)

Name		Value
System length		12000 mm 39‘ 4“ ft-in
System width		2290 mm 7‘ 6“ ft-in
System height		1650 mm 5‘ 5“ ft-in
L	Length	12150 mm 39‘ 10“ ft-in
B	Width	2430 mm 8‘ ft-in
H	Height (incl. pendant straps)	1910 mm 6‘ 3“ ft-in
Weight (incl. pendant straps)		1750 kg 3,858 lb
Double-taper pins Ø		65 mm 2.56“ in

Tab. 186: Technical data for 2316.20 jib section 12 m (40 ft)

LWN/LR.x/V03.01//Auslieferung/2015-06-03/en

copyright by
LIEBHERR

1.20.5 2316.20 jib head section

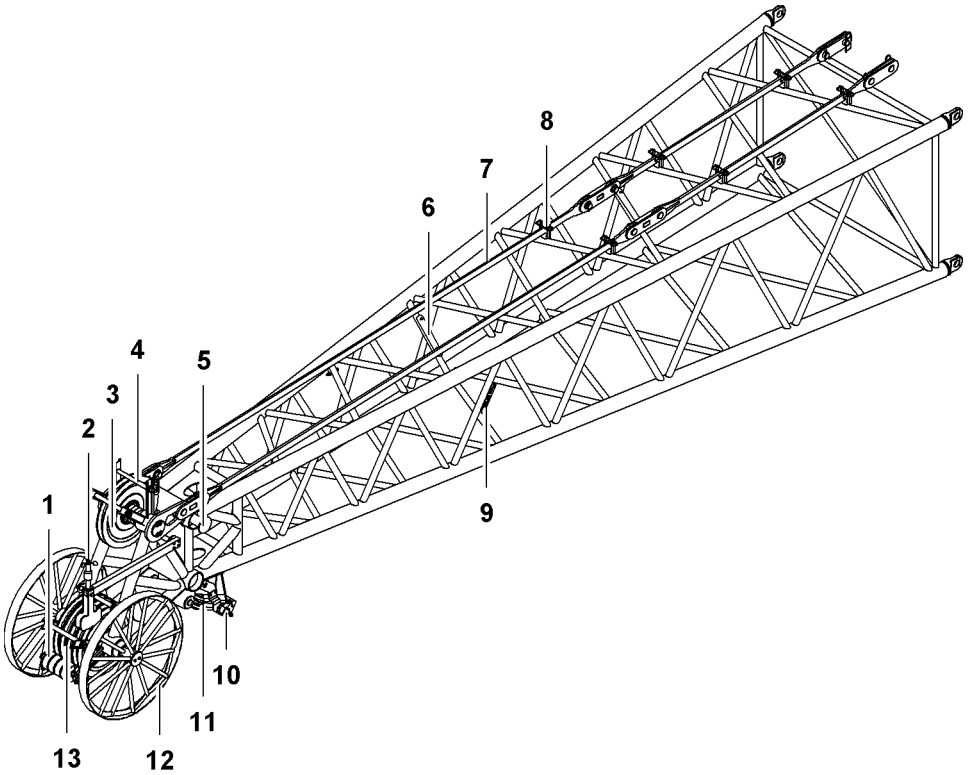

Fig. 312: 2316.20 jib head section

1	Rope protection roller (4x)	**8**	Transport bracket (6x) for pendant straps
2	Anemometer	**9**	Boom identification plate
3	Gantry pulley	**10**	Hoist limit switch (2x)
4	Rope protection pipe (2x)	**11**	Rope fixation
5	Lifting point (4x)	**12**	Wheel (2x)
6	Rope guard support (2x)	**13**	Pulley (4x)
7	Transport position (2x) of jib pendant straps		

This jib head section is designed to allow an auxiliary jib to be attached (For more information see: 1.26 Auxiliary jib* (30 t (66.000 lb)), page 375) .

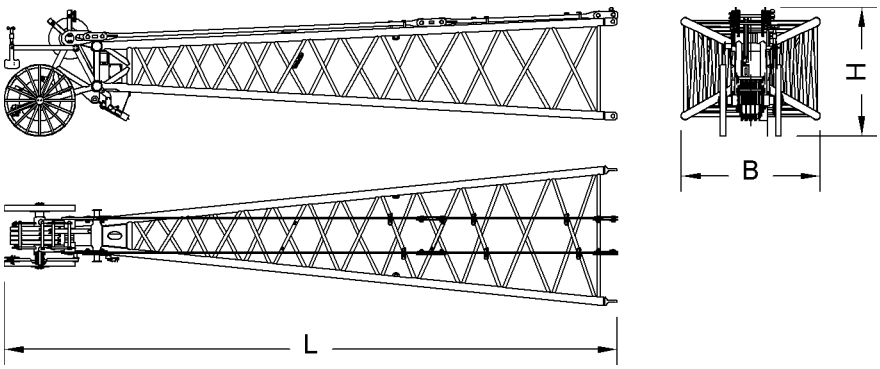

Fig. 313: 2316.20 jib head section dimensions

LWN/LR.x/V03.01//Auslieferung/2015-06-03/en

copyright by
LIEBHERR

Name		Value
System length		10000 mm 32‘ 10“ ft-in
System width		2290 mm 7‘ 6“ ft-in
System height		1650 mm 5‘ 5“ ft-in
L	Length	10750 mm 35‘ 3“ ft-in
B	Width	2430 mm 8‘ ft-in
H	Height	2180 mm 7‘ 2“ ft-in
Weight (incl. pendant straps)		2270 kg 5,004 lb

Tab. 187: 2316.20 jib head section, technical data

1.20.6 Mid-point suspension on luffing jib 2316

The mid-point suspensions on luffing jib 2316 differ with steel pendant straps and CF pendant straps.

LWN/LR.x/V03.01//Auslieferung/2015-06-03/en

copyright by
LIEBHERR

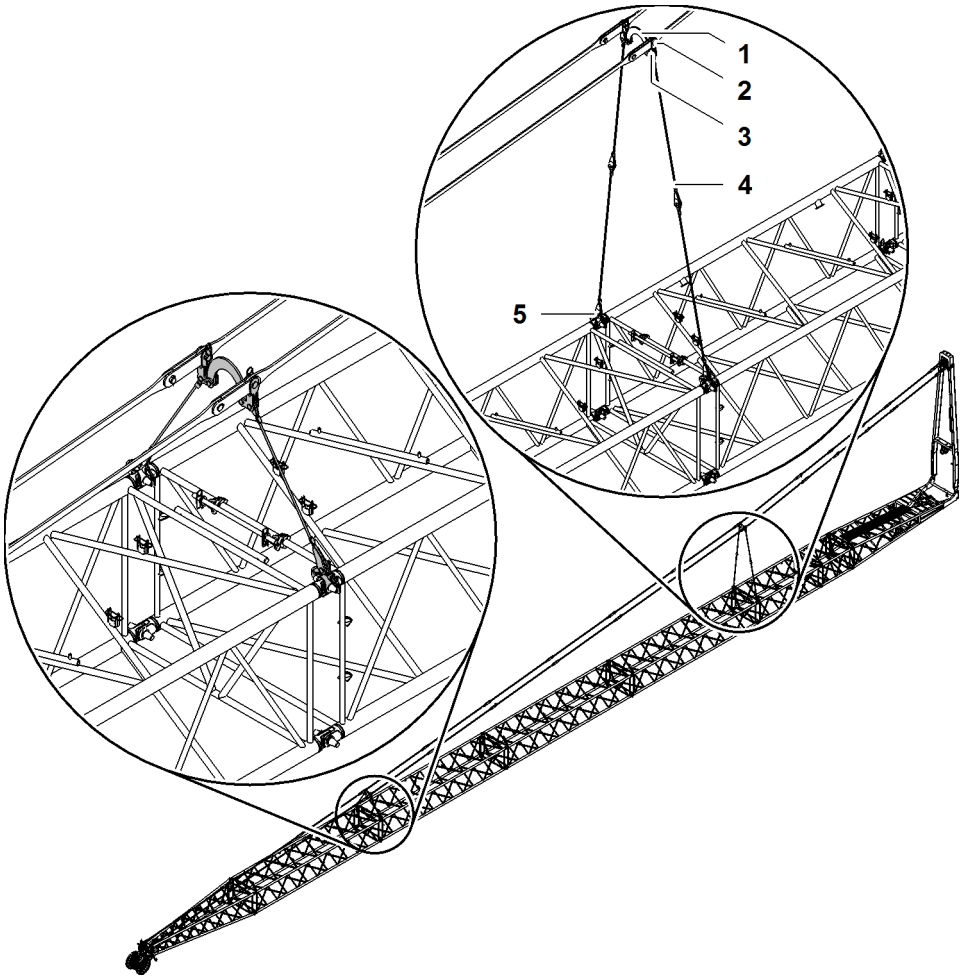

Fig. 314: Mid-point suspension on luffing jib 2316 (illustration of principle)

1 Connecting element (2x)
2 Spacer bracket
3 Pin (2x) for pendant straps
4 Stay ropes
5 Fork (2x)

LWN/LR.x/V03.01//Auslieferung/2015-06-03/en

copyright by
LIEBHERR

Connecting elements for steel pendant straps

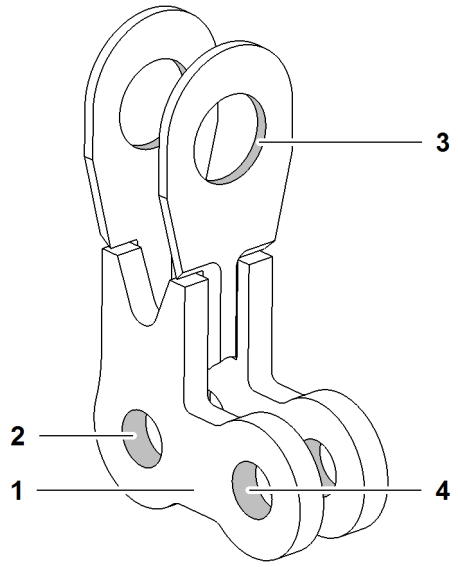

Fig. 315: Connecting elements for steel pendant straps (illustration of principle)

1	Connecting element	**3**	Pin connection point for pendant strap
2	Pin connection point for stay rope	**4**	Pin connection point for spacer bracket

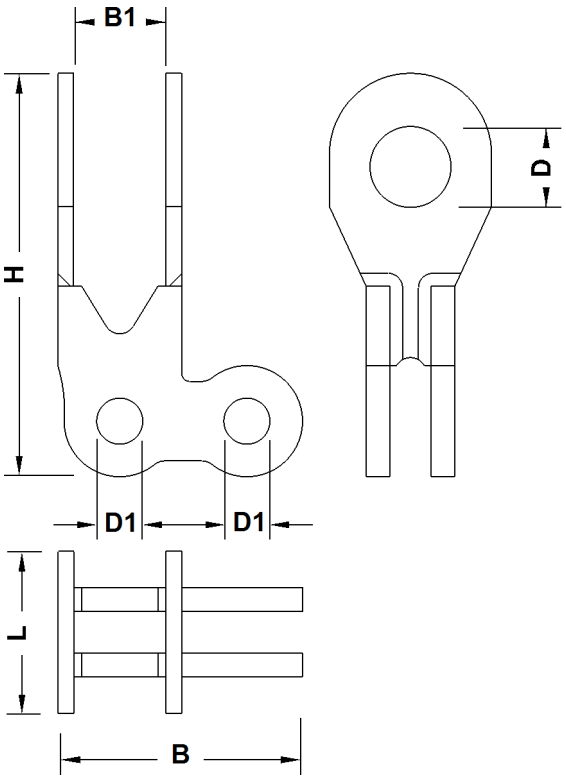

Fig. 316: Dimensions connecting elements for steel pendant straps

LWN/LR.x/V03.01//Auslieferung/2015-06-03/en

copyright by
LIEBHERR

Name		Value
L	Length	102 mm 4.02“ in
H	Height	354 mm 1‘ 2“ ft-in
B	Width	190 mm 7.48“ in
B1	Width between links	58 mm 2.28“ in
D	Pin Ø	55 mm 2.17“ in
D1	Pin Ø	35 mm 1.38“ in

Tab. 188: Technical data connecting elements for steel pendant straps

Connecting elements for CF pendant straps

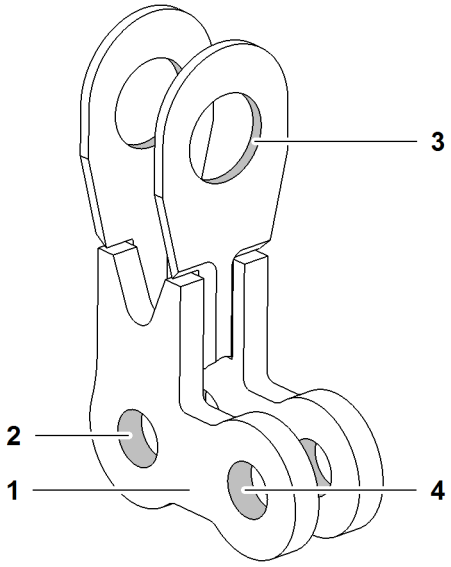

Fig. 317: Connecting elements for CF pendant straps (illustration of principle)

1 Connecting element

2 Pin connection point for stay rope

3 Pin connection point for pendant strap

4 Pin connection point for spacer bracket

LWN/LR.x/V03.01//Auslieferung/2015-06-03/en

copyright by
LIEBHERR

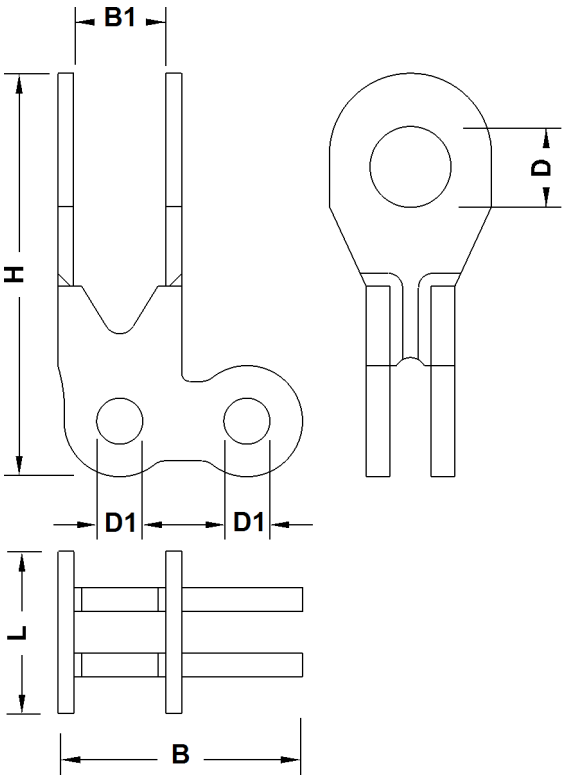

Fig. 318: Dimensions connecting elements for CF pendant straps

Name		Value
L	Length	110 mm 4.33“ in
H	Height	358 mm 1‘ 2“ ft-in
B	Width	207 mm 8.15“ in
B1	Width between link	104 mm 4.09“ in
D	Pin Ø	60 mm 2.36“ in
D1	Pin Ø	35 mm 1.38“ in

Tab. 189: Technical data connecting elements for CF pendant straps

LWN/LR.x/V03.01//Auslieferung/2015-06-03/en

copyright by
LIEBHERR

Forks

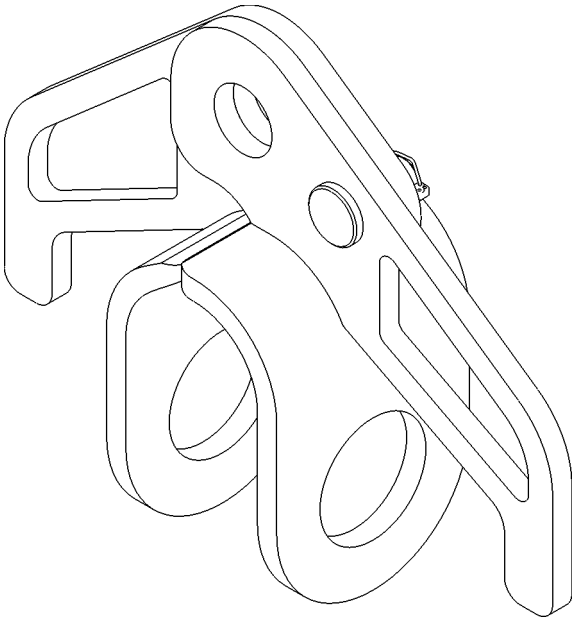

Fig. 319: Forks (illustration of principle)

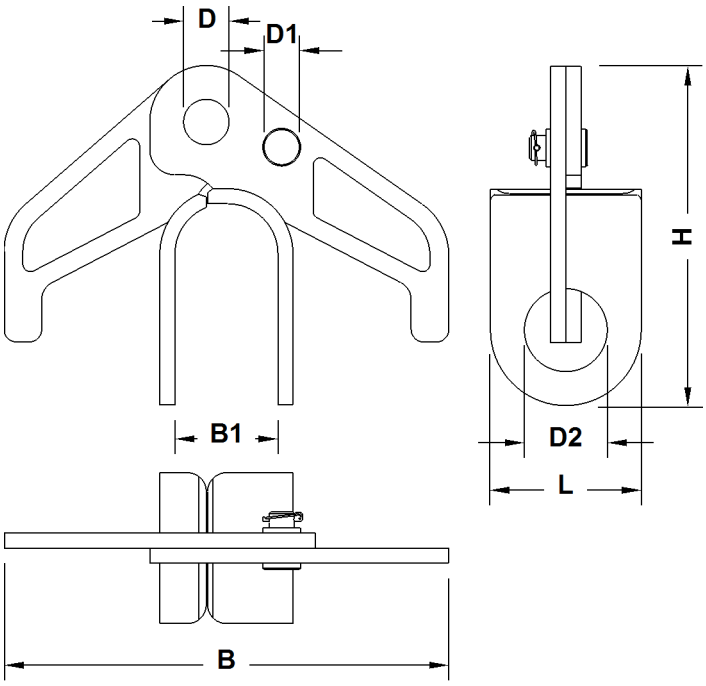

Fig. 320: Fork dimensions

Name		Value
L	Length	120 mm 4.72“ in
B	Width	354 mm 1‘ 2“ ft-in

LWN/LR.x/V03.01//Auslieferung/2015-06-03/en

copyright by
LIEBHERR

Name		Value
B1	Inner width	82 mm 3.23“ in
H	Height	270 mm 10.63“ in
D	Pin Ø	35 mm 1.38“ in
D1	Pin Ø	20 mm 0.79“ in
D2	Pin Ø	65 mm 2.56“ in

Tab. 190: Technical data forks

Spacer bracket

The spacer brackets are identical with steel pendant straps and CF pendant straps.

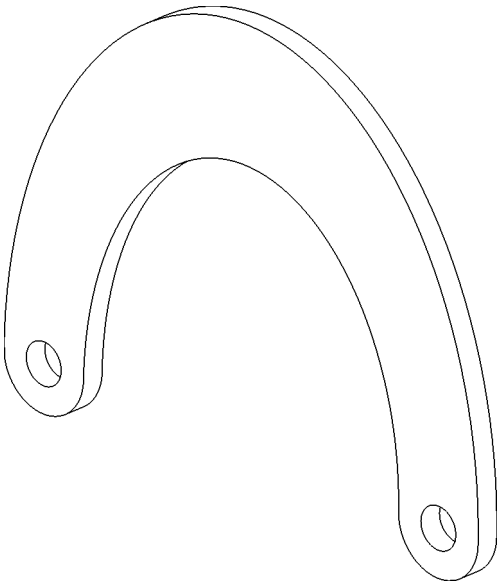

Fig. 321: Spacer brackets (illustration of principle)

LWN/LR.x/V03.01//Auslieferung/2015-06-03/en

copyright by
LIEBHERR

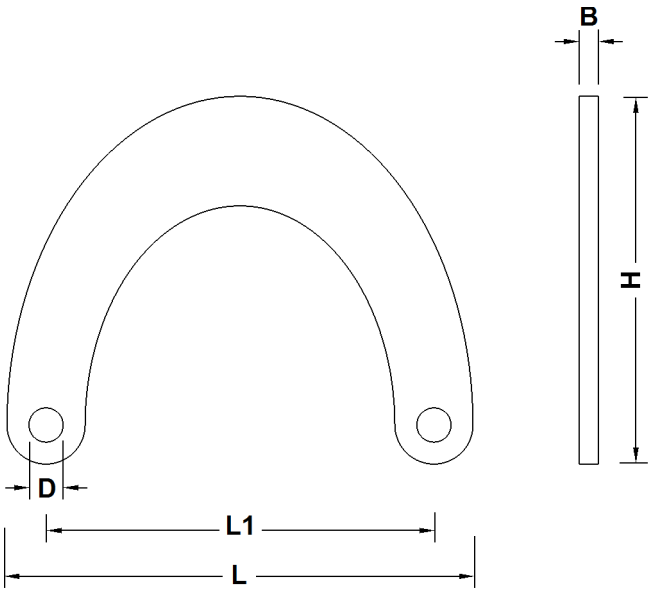

Fig. 322: Dimensions spacer brackets

Name		Value
L	Length	489 mm 1‘ 7“ ft-in
L1	Distance between pins	407 mm 1‘ 4“ ft-in
B	Width	20 mm 0.79“ in
H	Height	386 mm 1‘ 3“ ft-in
D	Pin Ø	35 mm 1.38“ in

Tab. 191: Technical data spacer brackets

Stay ropes

Several stay ropes are assembled to achieve defined rope lengths.

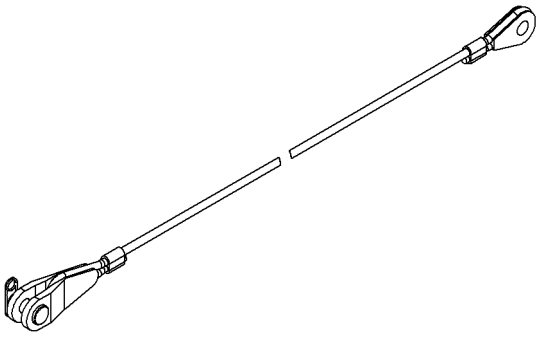

Fig. 323: Stay ropes (illustration of principle)

LWN/LR.x/V03.01//Auslieferung/2015-06-03/en

copyright by
LIEBHERR

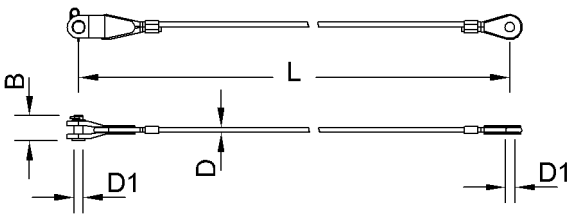

Fig. 324: Dimensions stay ropes

Name		Value
L	Length of stay rope	1100 mm 3‘ 7“ ft-in
		1300 mm 4‘ 3“ ft-in
		1600 mm 5‘ 3“ ft-in
		2100 mm 6‘ 11“ ft-in
		2600 mm 8‘ 6“ ft-in
		3000 mm 9‘ 10“ ft-in
D	Ø of stay rope	18 mm 0.71“ in
D1	Pin Ø	35 mm 1.38“ in
B	Length of pin	90 mm 3.54“ in

Tab. 192: Technical data stay ropes

Pins for steel pendant straps

The pins supplied with the pendant straps must be exchanged for longer pins.

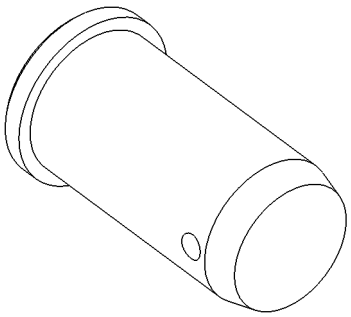

Fig. 325: Pins for steel pendant straps (illustration of principle)

LWN/LR.x/V03.01//Auslieferung/2015-06-03/en

copyright by
LIEBHERR

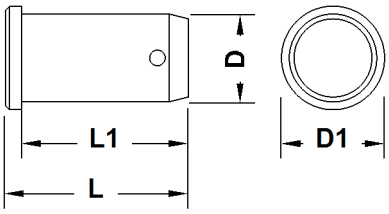

Fig. 326: Dimensions pins for steel pendant straps

Name		Value
L	Total length	120 mm 4.72“ in
L1	Length	112 mm 4.41“ in
D	Diameter	55 mm 2.17“ in
D1	Outer diameter	63 mm 2.48“ in

Tab. 193: Technical data pins for steel pendant straps

Pins for CF pendant straps

The pins supplied with the pendant straps must be exchanged for longer pins.

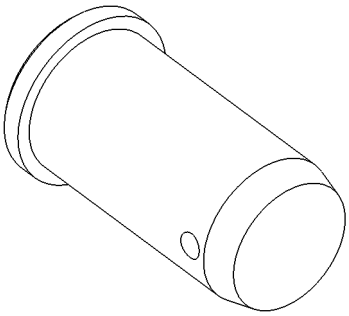

Fig. 327: Pins for CF pendant straps (illustration of principle)

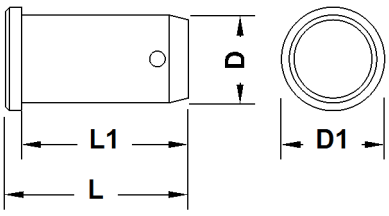

Fig. 328: Dimensions pins for CF pendant straps

Name		Value
L	Total length	158 mm 6.22“ in
L1	Length	153 mm 6.02“ in

LWN/LR.x/V03.01//Auslieferung/2015-06-03/en

copyright by
LIEBHERR

Name		Value
D	Diameter	60 mm 2.36“ in
D1	Outer diameter	68 mm 2.68“ in

Tab. 194: Technical data pins for CF pendant straps

1.20.7 Steel pendant straps on luffing jib 2316

Steel pendant straps on jib base section 2316.20

Jib pendant strap 3 m (10 ft)

Installation site in crane operation:
- Luffing jib 2316 (For more information see: Pendant straps A-frame3 to jib head 2316, page 1575)
- Luffing jib 2316 + midfall 2316 (For more information see: Pendant straps A-frame3 to jib head 2316, page 1673)

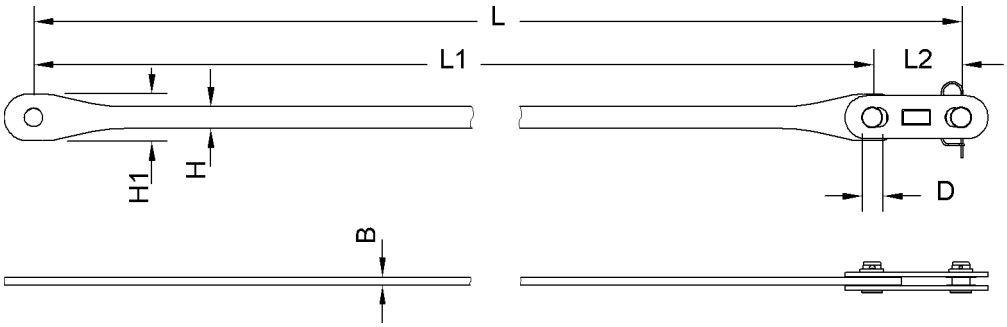

Fig. 329: Dimensions jib pendant strap 3 m (10 ft)

Name		Value
L	Length	3000 mm 9‘ 10“ ft-in
L1	Length of pendant strap	2730 mm 8‘ 11“ ft-in
L2	Length of connecting link	270 mm 10.63“ in
W	Width of pendant strap	22 mm 0.87“ in
H	Height of pendant strap	66 mm 2.60“ in
H1	Height of pendant strap	140 mm 5.51“ in
D	Pin Ø	55 mm 2.17“ in

LWN/LR.x/V03.01//Auslieferung/2015-06-03/en

copyright by
LIEBHERR

Name	Value
Weight	53 kg 117 lb

Tab. 195: Technical data jib pendant strap3 m (10 ft)

Steel pendant straps on A-frame2

Equalizer A-frame2 (jib backstay strap)

Installation site in crane operation:
- Luffing jib 2316 (For more information see: Jib backstay straps A-frame2 to main boom base section 2821, page 1575)
- Luffing jib 2316 + midfall 2316 (For more information see: Jib backstay straps A-frame2 to main boom base section 2821, page 1672)

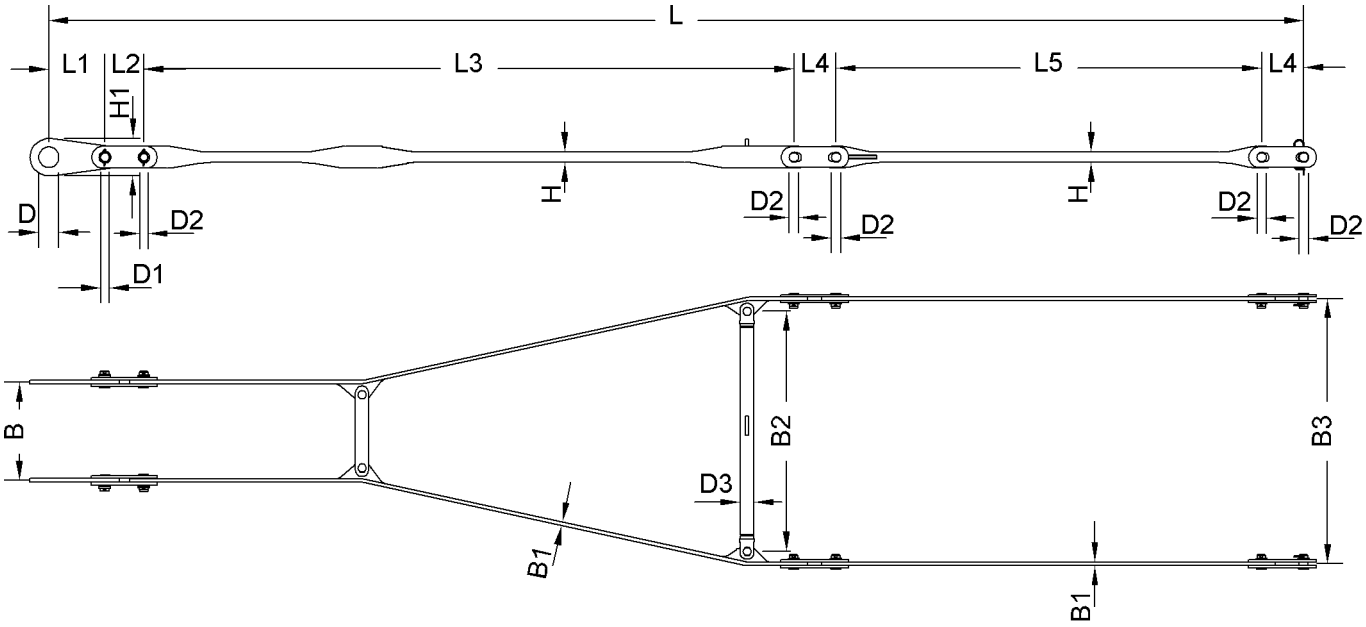

Fig. 330: Dimensions equalizer on A-frame2 (jib backstay strap)

Name		Value
L	Length	8050 mm 26‘ 5“ ft-in
L1	Length of connecting link	360 mm 1‘ 2“ ft-in
L2	Length of connecting link	250 mm 9.84“ in
L3	Length of crossbar	4170 mm 13‘ 8“ ft-in
L4	Length of connecting link	270 mm 10.63“ in
L5	Length of pendant strap	2730 mm 8‘ 11“ ft-in

LWN/LR.x/V03.01//Auslieferung/2015-06-03/en

copyright by
LIEBHERR

Name		Value
W	Width	630 mm 2‘ 1“ ft-in
W1	Width of pendant strap	22 mm 0.87“ in
W2	Width of spacer bar	1540 mm 5‘ 1“ ft-in
W3	Width	1700 mm 5‘ 7“ ft-in
H	Height of pendant strap	66 mm 2.60“ in
H1	Height of connecting link	281 mm 11.06“ in
D	Pin Ø	150 mm 5.91“ in
D1	Pin Ø	60 mm 2.36“ in
D2	Pin Ø	55 mm 2.17“ in
D3	Spacer bar Ø	89 mm 3.50“ in
Weight		343 kg 756 lb

Tab. 196: Technical data equalizer on A-frame2 (jib backstay strap)

Steel pendant straps on A-frame3

A-frame3 equalizer (jib pendant strap)

Installation site in crane operation:
- Luffing jib 2316 (For more information see: Pendant straps A-frame3 to jib head 2316, page 1575)
- Luffing jib 2316 + midfall 2316 (For more information see: Pendant straps A-frame3 to jib head 2316, page 1673)

LWN/LR.x/V03.01//Auslieferung/2015-06-03/en

copyright by
LIEBHERR

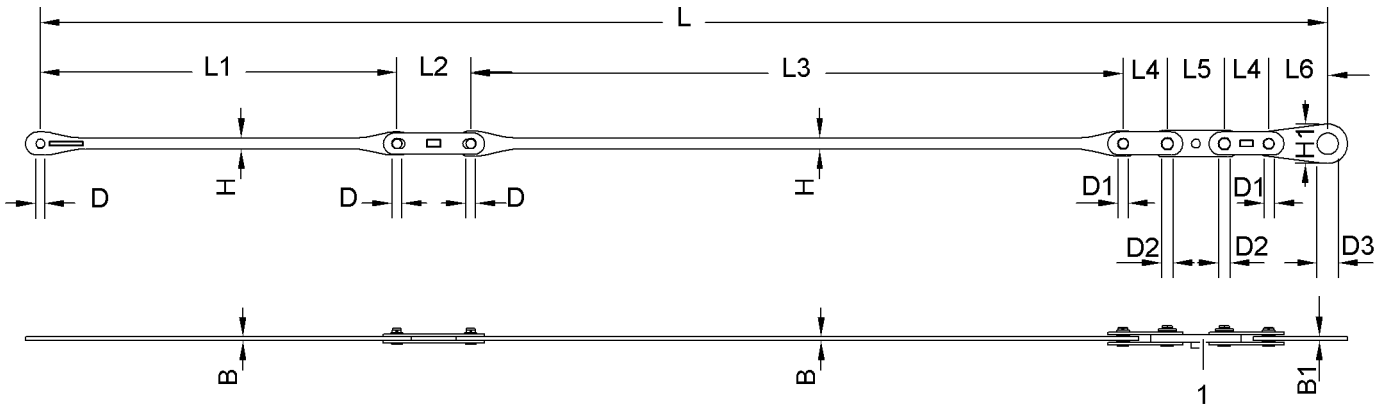

Fig. 331: Dimensions equalizer on A-frame3 (jib pendant strap)

1 Tension load cell

Name		Value
L	Length	7850 mm 25‘ 9“ ft-in
L1	Length of pendant strap	2175 mm 7‘ 2“ ft-in
L2	Length of connecting link	450 mm 1‘ 6“ ft-in
L3	Length of pendant strap	3977 mm 13‘ 1“ ft-in
L4	Length of connecting link	270 mm 10.63“ in
L5	Length of tension load cell	348 mm 1‘ 2“ ft-in
L6	Length of connecting link	360 mm 1‘ 2“ ft-in
W	Width of pendant strap	22 mm 0.87“ in
W1	Width of connecting link	25 mm 0.98“ in
H	Height of pendant strap	66 mm 2.60“ in
D	Pin Ø	55 mm 2.17“ in
D1	Pin Ø	60 mm 2.36“ in
D2	Pin Ø	62 mm 2.44“ in
D3	Pin Ø	150 mm 5.91“ in
Weight		167 kg 368 lb

Tab. 197: Technical data A-frame3 equalizer (jib pendant strap)

LWN/LR.x/V03.01//Auslieferung/2015-06-03/en

copyright by
LIEBHERR

Steel pendant straps on jib section 2316.20 3 m (10 ft)

Jib pendant strap 3 m (10 ft)

Installation site in crane operation:
- Luffing jib 2316 (For more information see: Pendant straps A-frame3 to jib head 2316, page 1575)
- Luffing jib 2316 + midfall 2316 (For more information see: Pendant straps A-frame3 to jib head 2316, page 1673)

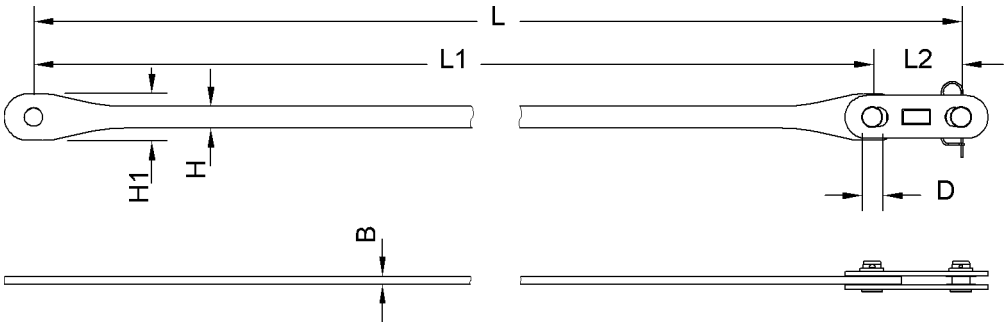

Fig. 332: Dimensions jib pendant strap 3 m (10 ft)

Name		Value
L	Length	3000 mm 9‘ 10“ ft-in
L1	Length of pendant strap	2730 mm 8‘ 11“ ft-in
L2	Length of connecting link	270 mm 10.63“ in
W	Width of pendant strap	22 mm 0.87“ in
H	Height of pendant strap	66 mm 2.60“ in
H1	Height of pendant strap	140 mm 5.51“ in
D	Pin Ø	55 mm 2.17“ in
Weight		53 kg 117 lb

Tab. 198: Technical data jib pendant strap3 m (10 ft)

Steel pendant straps on jib section 2316.20 6 m (20 ft)

Jib pendant strap 6 m (20 ft)

Installation site in crane operation:
- Luffing jib 2316 (For more information see: Pendant straps A-frame3 to jib head 2316, page 1575)
- Luffing jib 2316 + midfall 2316 (For more information see: Pendant straps A-frame3 to jib head 2316, page 1673)

LWN/LR.x/V03.01//Auslieferung/2015-06-03/en

copyright by
LIEBHERR

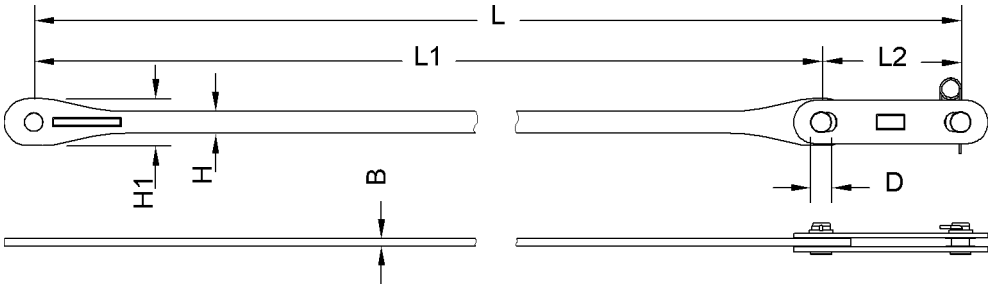

Fig. 333: Dimensions jib pendant strap 6 m (20 ft)

Name		Value
L	Length	6000 mm 19‘ 8“ ft-in
L1	Length of pendant strap	5580 mm 18‘ 4“ ft-in
L2	Length of connecting link	420 mm 1‘ 5“ ft-in
W	Width of pendant strap	22 mm 0.87“ in
H	Height of pendant strap	66 mm 2.60“ in
H1	Height of pendant strap	140 mm 5.51“ in
D	Pin Ø	55 mm 2.17“ in
Weight		89 kg 196 lb

Tab. 199: Technical data jib pendant strap 6 m (20 ft)

Steel pendant straps on jib section 2316.20 12 m (40 ft)

Jib pendant strap 12 m (40 ft)

Installation site in crane operation:
- Luffing jib 2316 (For more information see: Pendant straps A-frame3 to jib head 2316, page 1575)
- Luffing jib 2316 + midfall 2316 (For more information see: Pendant straps A-frame3 to jib head 2316, page 1673)

LWN/LR.x/V03.01//Auslieferung/2015-06-03/en

copyright by
LIEBHERR

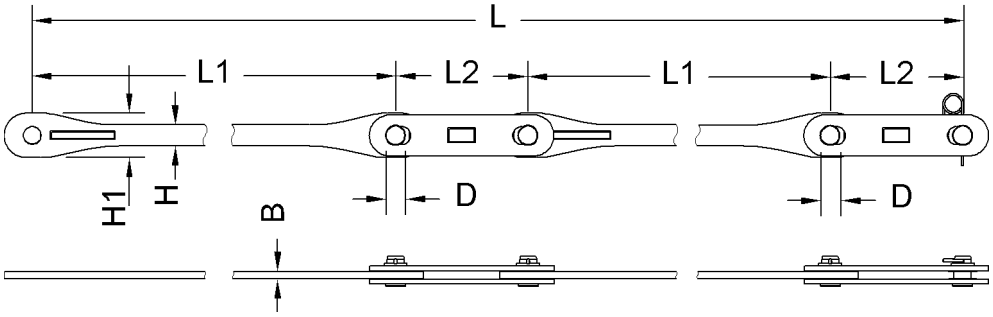

Fig. 334: Dimensions jib pendant strap 12 m (40 ft)

Name		Value
L	Length	12000 mm 39‘ 4“ ft-in
L1	Length of pendant strap	5580 mm 18‘ 4“ ft-in
L2	Length of connecting link	420 mm 1‘ 5“ ft-in
W	Width of pendant strap	22 mm 0.87“ in
H	Height of pendant strap	66 mm 2.60“ in
H1	Height of pendant strap	140 mm 5.51“ in
D	Pin Ø	55 mm 2.17“ in
Weight		178 kg 392 lb

Tab. 200: Technical data jib pendant strap 12 m (40 ft)

Steel pendant straps on jib head 2316.20

Jib pendant strap on jib head 2316.20

Installation site in crane operation:
- Luffing jib 2316 (For more information see: Pendant straps A-frame3 to jib head 2316, page 1575)
- Luffing jib 2316 + midfall 2316 (For more information see: Pendant straps A-frame3 to jib head 2316, page 1673)

LWN/LR.x/V03.01//Auslieferung/2015-06-03/en

copyright by
LIEBHERR

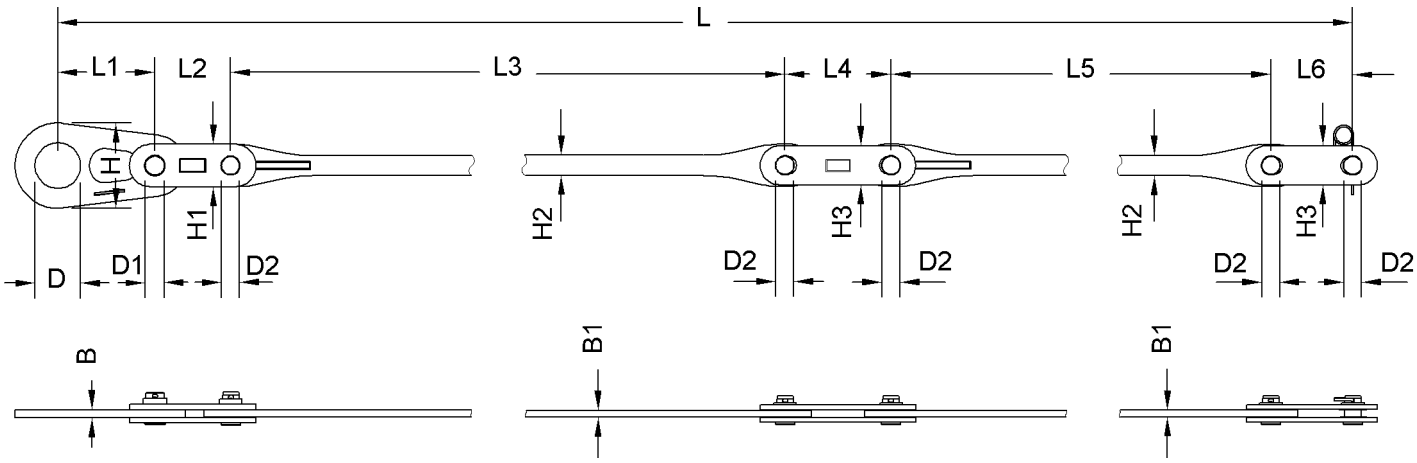

Fig. 335: Dimensions jib pendant strap on jib head 2316.20

Name		Value
L	Length	9500 mm 31‘ 2“ ft-in
L1	Length of connecting link	320 mm 1‘ 1“ ft-in
L2	Length of connecting link	250 mm 9.84“ in
L3	Length of pendant strap	5580 mm 18‘ 4“ ft-in
L4	Length of connecting link	350 mm 1‘ 2“ ft-in
L5	Length of pendant strap	2730 mm 8‘ 11“ ft-in
L6	Length of connecting link	270 mm 10.63“ in
W	Width of connecting link	25 mm 0.98“ in
W1	Width of pendant strap	22 mm 0.87“ in
H	Height of connecting link	280 mm 11.02“ in
H1	Height of connecting link	130 mm 5.12“ in
H2	Height of pendant strap	66 mm 2.60“ in
H3	Height of connecting link	140 mm 5.51“ in
D	Pin Ø	150 mm 5.91“ in
D1	Pin Ø	60 mm 2.36“ in

copyright by
LIEBHERR

Name		Value
D2	Pin Ø	55 mm 2.17“ in
Weight		325 kg 716 lb

Tab. 201: Technical data jib pendant strap on jib head 2316.20

1.20.8 CF pendant straps on luffing jib 2316

CF pendant straps on jib base section 2316.22

Jib pendant strap 3 m (10 ft)

Installation site in crane mode:
- Luffing jib 2316 (For more information see: Pendant straps A-frame3 to jib head 2316, page 1578)
- Luffing jib 2316 + midfall 2316 (For more information see: Pendant straps A-frame3 to jib head 2316, page 1675)

Generation A of jib pendant strap 3 m (10 ft)

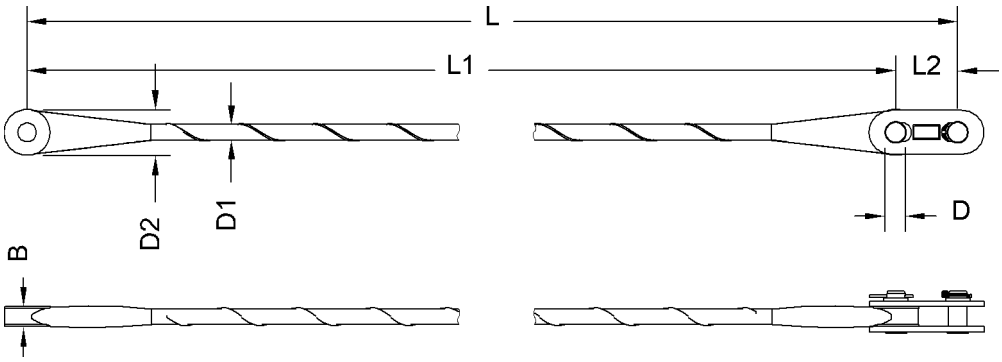

Fig. 336: Dimensions jib pendant strap 3 m (10 ft)

Name		Value
L	Length	3000 mm 9‘ 10“ ft-in
L1	Length of pendant strap	2800 mm 9‘ 2“ ft-in
L2	Length of connecting link	200 mm 7.87“ in
W	Width	64 mm 2.52“ in
D	Pin Ø	60 mm 2.36“ in
D1	Pendant strap Ø	50 mm 1.97“ in
D2	Pendant strap Ø	148 mm 5.83“ in

LWN/LR.x/V03.01//Auslieferung/2015-06-03/en

copyright by
LIEBHERR

Name	Value
Weight	35 kg 77.16 lb

Tab. 202: Technical data jib pendant strap 3 m (10 ft)

Generation B of jib pendant strap 3 m (10 ft)

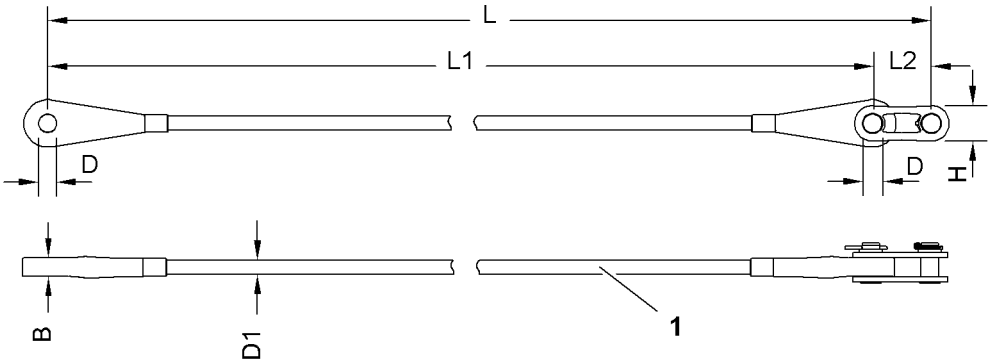

Fig. 337: Dimensions jib pendant strap 3 m (10 ft)

1 Wire mesh hose as protective sheath

Name		Value
L	Length	3000 mm 9‘ 10“ ft-in
L1	Length of pendant strap	2800 mm 9‘ 2“ ft-in
L2	Length of connecting link	200 mm 7.87“ in
B	Width	63 mm 2.48“ in
H	Height of connecting link	121 mm 4.76“ in
D	Pin Ø	60 mm 2.36“ in
D1	Pendant strap Ø	48 mm 1.89“ in
Weight		26 kg 57.32 lb

Tab. 203: Technical data jib pendant strap 3 m (10 ft)

CF pendant straps on A-frame2

Equalizer A-frame2 (jib backstay strap)

Installation site in crane operation:
– Luffing jib 2316 (For more information see: Jib backstay straps A-frame2 to main boom base section 2821, page 1577)

LWN/LR.x/V03.01//Auslieferung/2015-06-03/en

copyright by LIEBHERR

– Luffing jib 2316 + midfall 2316 (For more information see: Jib backstay straps A-frame2 to main boom base section 2821, page 1674)

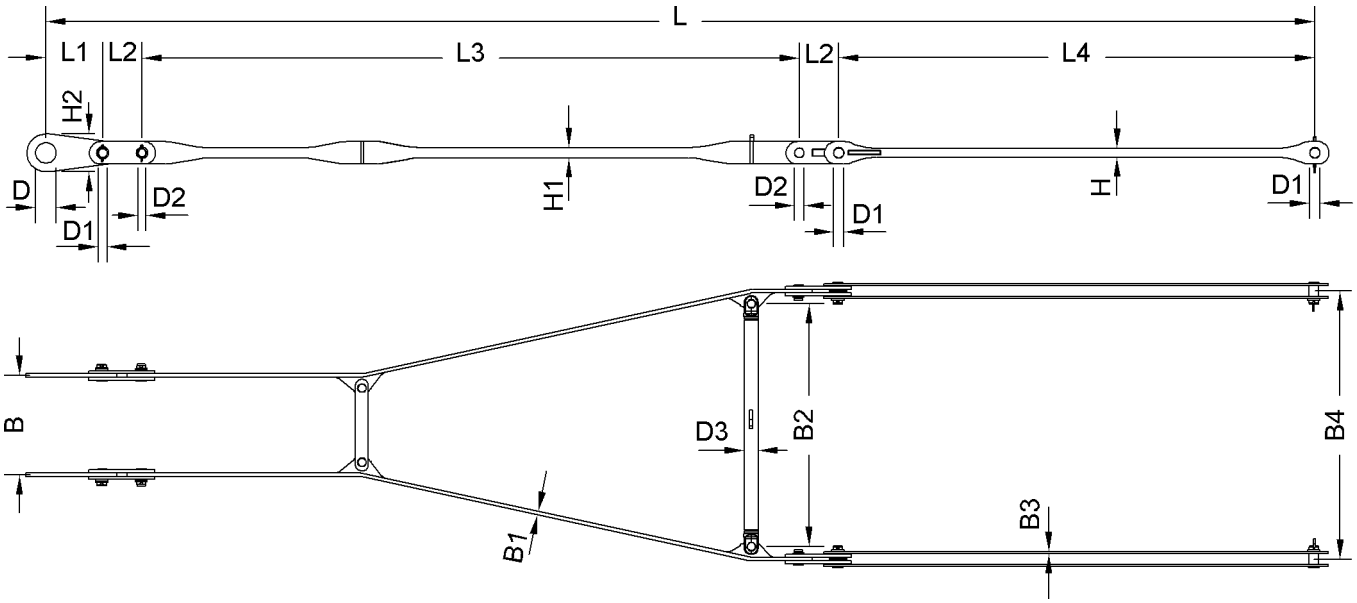

Fig. 338: Dimensions equalizer on A-frame2 (jib backstay strap)

Name		Value
L	Length	8050 mm 26‘ 5“ ft-in
L1	Length of connecting link	360 mm 1‘ 2“ ft-in
L2	Length of connecting link	250 mm 9.84“ in
L3	Length of crossbar	4170 mm 13‘ 8“ ft-in
L4	Length of pendant strap	3020 mm 9‘ 11“ ft-in
W	Width	630 mm 2‘ 1“ ft-in
W1	Width of pendant strap	22 mm 0.87“ in
W2	Width of spacer bar	1540 mm 5‘ 1“ ft-in
W3	Width of pendant strap	15 mm 0.59“ in
W4	Width	1700 mm 5‘ 7“ ft-in
H	Height of pendant strap	55 mm 2.17“ in
H1	Height of pendant strap	64 mm 2.52“ in

LWN/LR.x/V03.01//Auslieferung/2015-06-03/en

copyright by
LIEBHERR

Name		Value
H2	Height of connecting link	240 mm 9.45“ in
D	Pin Ø	130 mm 5.12“ in
D1	Pin Ø	60 mm 2.36“ in
D2	Pin Ø	55 mm 2.17“ in
D3	Spacer bar Ø	89 mm 3.50“ in
Weight		358 kg 789 lb

Tab. 204: Technical data equalizer on A-frame2 (jib backstay strap)

CF pendant straps on A-frame3

A-frame3 equalizer (jib pendant strap)

Installation site in crane operation:
- Luffing jib 2316 (For more information see: Pendant straps A-frame3 to jib head 2316, page 1578)
- Luffing jib 2316 + midfall 2316 (For more information see: Pendant straps A-frame3 to jib head 2316, page 1675)

Generation A of A-frame3 equalizer (jib pendant strap)

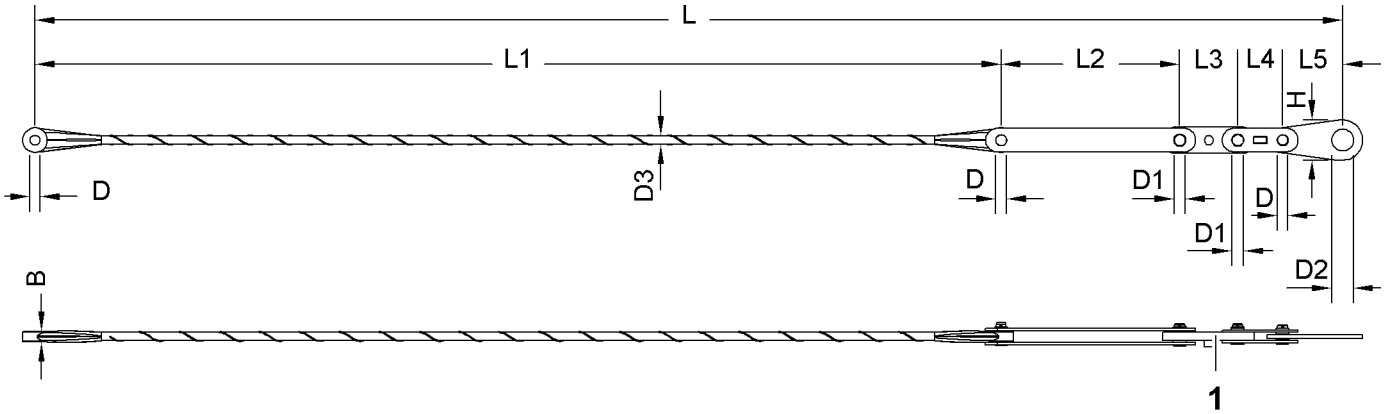

Fig. 339: Dimensions equalizer on A-frame3 (jib pendant strap)

1 Tension load cell

Name		Value
L	Length	7850 mm 25‘ 9“ ft-in
L1	Length of pendant strap	5800 mm 19‘ ft-in

LWN/LR.x/V03.01//Auslieferung/2015-06-03/en

copyright by LIEBHERR

Name		Value
L2	Length of connecting link	1072 mm 3‘ 6“ ft-in
L3	Length of tension load cell	348 mm 1‘ 2“ ft-in
L4	Length of connecting link	270 mm 10.63“ in
L5	Length of connecting link	360 mm 1‘ 2“ ft-in
W	Width of pendant strap	64 mm 2.52“ in
H	Height of connecting link	240 mm 9.45“ in
D	Pin Ø	60 mm 2.36“ in
D1	Pin Ø	62 mm 2.44“ in
D2	Pin Ø	130 mm 5.12“ in
D3	Pendant strap Ø	50 mm 1.97“ in
Weight		129 kg 284 lb

Tab. 205: Technical data A-frame3 equalizer (jib pendant strap)

Generation B of A-frame3 equalizer (jib pendant strap)

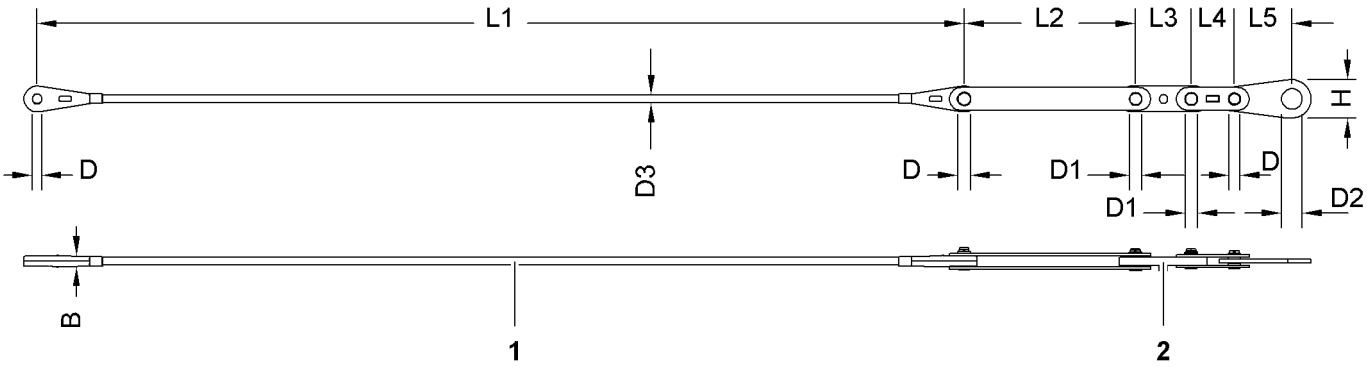

Fig. 340: Dimensions equalizer on A-frame3 (jib pendant strap)

1 Wire mesh hose as protective sheath

2 Tension load cell

Name		Value
L	Length	7850 mm 25‘ 9“ ft-in
L1	Length of pendant strap	5800 mm 19‘ ft-in

LWN/LR.x/V03.01//Auslieferung/2015-06-03/en

copyright by
LIEBHERR

Name		Value
L2	Length of connecting link	1072 mm 3‘ 6“ ft-in
L3	Length of tension load cell	348 mm 1‘ 2“ ft-in
L4	Length of connecting link	270 mm 10.63“ in
L5	Length of connecting link	360 mm 1‘ 2“ ft-in
B	Width of pendant strap	63 mm 2.48“ in
H	Height of connecting link	240 mm 9.45“ in
D	Pin Ø	60 mm 2.36“ in
D1	Pin Ø	62 mm 2.44“ in
D2	Pin Ø	130 mm 5.12“ in
D3	Pendant strap Ø	48 mm 1.89“ in
Weight		85 kg 187 lb

Tab. 206: Technical data A-frame3 equalizer (jib pendant strap)

CF pendant straps on jib section 2316.20 3 m (10 ft)

Jib pendant strap 3 m (10 ft)

Installation site in crane mode:
- Luffing jib 2316 (For more information see: Pendant straps A-frame3 to jib head 2316, page 1578)
- Luffing jib 2316 + midfall 2316 (For more information see: Pendant straps A-frame3 to jib head 2316, page 1675)

Generation A of jib pendant strap 3 m (10 ft)

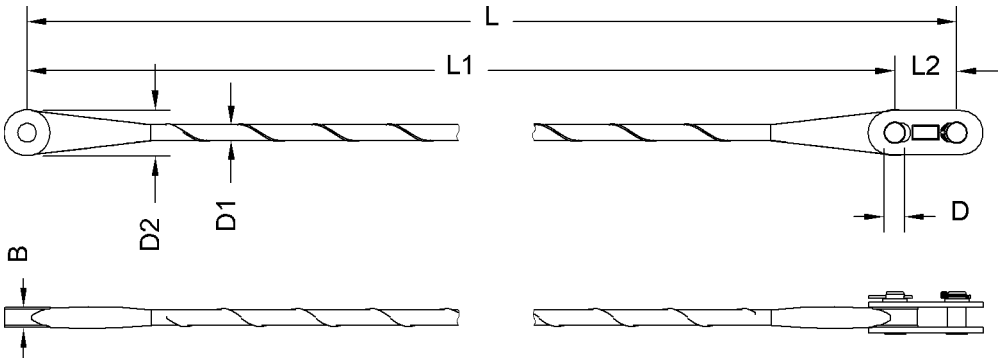

Fig. 341: Dimensions jib pendant strap 3 m (10 ft)

LWN/LR.x/V03.01//Auslieferung/2015-06-03/en

copyright by
LIEBHERR

Name		Value
L	Length	3000 mm 9‘ 10“ ft-in
L1	Length of pendant strap	2800 mm 9‘ 2“ ft-in
L2	Length of connecting link	200 mm 7.87“ in
B	Width	64 mm 2.52“ in
D	Pin Ø	60 mm 2.36“ in
D1	Pendant strap Ø	50 mm 1.97“ in
D2	Pendant strap Ø	148 mm 5.83“ in
Weight		35 kg 77.16 lb

Tab. 207: Technical data jib pendant strap 3 m (10 ft)

Generation B of jib pendant strap 3 m (10 ft)

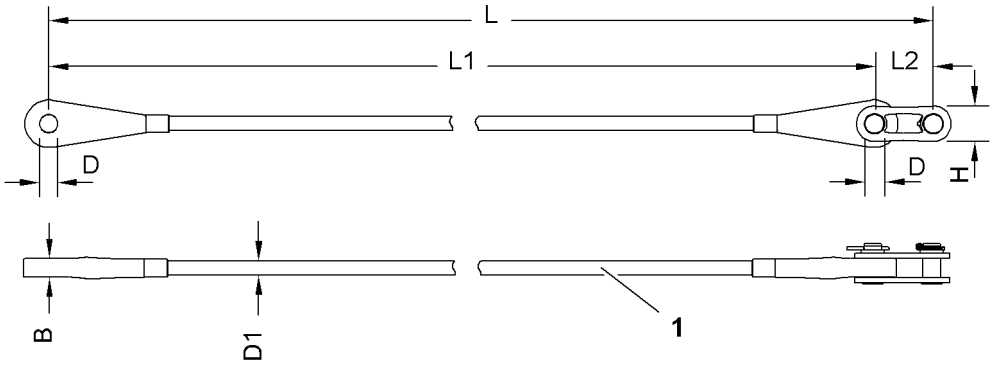

Fig. 342: Dimensions jib pendant strap 3 m (10 ft)

1 Wire mesh hose as protective sheath

Name		Value
L	Length	3000 mm 9‘ 10“ ft-in
L1	Length of pendant strap	2800 mm 9‘ 2“ ft-in
L2	Length of connecting link	200 mm 7.87“ in
B	Width	63 mm 2.48“ in
H	Height of connecting link	121 mm 4.76“ in

LWN/LR.x/V03.01//Auslieferung/2015-06-03/en

copyright by
LIEBHERR

Name		Value
D	Pin Ø	60 mm 2.36“ in
D1	Pendant strap Ø	48 mm 1.89“ in
Weight		26 kg 57.32 lb

Tab. 208: Technical data jib pendant strap 3 m (10 ft)

CF pendant straps on jib section 2316.20 6 m (20 ft)

Jib pendant strap 6 m (20 ft)

Installation site in crane mode:
- Luffing jib 2316 (For more information see: Pendant straps A-frame3 to jib head 2316, page 1578)
- Luffing jib 2316 + midfall 2316 (For more information see: Pendant straps A-frame3 to jib head 2316, page 1675)

Generation A of jib pendant strap 6 m (20 ft)

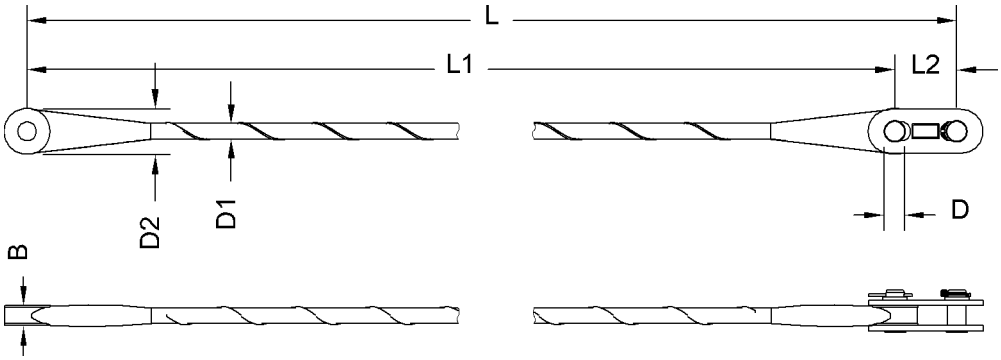

Fig. 343: Dimensions jib pendant strap 6 m (20 ft)

Name		Value
L	Length	6000 mm 19‘ 8“ ft-in
L1	Length of pendant strap	5800 mm 19‘ ft-in
L2	Length of connecting link	200 mm 7.87“ in
B	Width	64 mm 2.52“ in
D	Pin Ø	60 mm 2.36“ in
D1	Pendant strap Ø	50 mm 1.97“ in
D2	Pendant strap Ø	148 mm 5.83“ in

LWN/LR.x/V03.01//Auslieferung/2015-06-03/en

copyright by
LIEBHERR

Name	Value
Weight	43 kg 94.80 lb

Tab. 209: Technical data jib pendant strap 6 m (20 ft)

Generation B of jib pendant strap 6 m (20 ft)

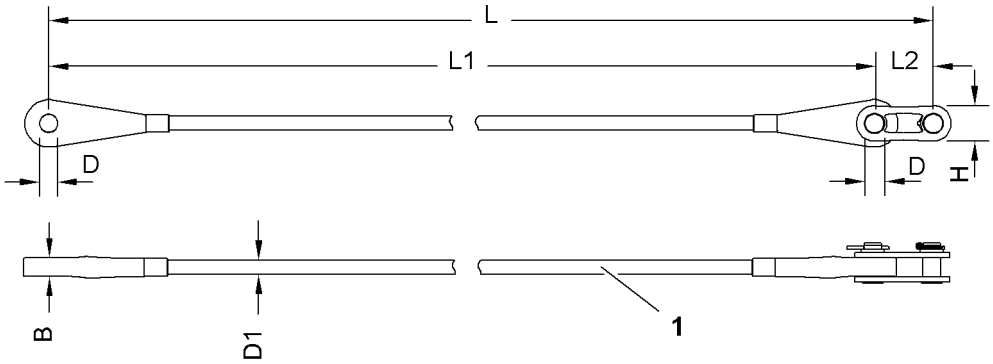

Fig. 344: Dimensions jib pendant strap 6 m (20 ft)

1 Wire mesh hose as protective sheath

Name		Value
L	Length	6000 mm 19‘ 8“ ft-in
L1	Length of pendant strap	5800 mm 19‘ ft-in
L2	Length of connecting link	200 mm 7.87“ in
B	Width	63 mm 2.48“ in
H	Height of connecting link	121 mm 4.76“ in
D	Pin Ø	60 mm 2.36“ in
D1	Pendant strap Ø	48 mm 1.89“ in
Weight		32 kg 70.55 lb

Tab. 210: Technical data jib pendant strap 6 m (20 ft)

CF pendant straps on jib section 2316.20 12 m (40 ft)

Jib pendant strap 12 m (40 ft)

Installation site in crane mode:
– Luffing jib 2316 (For more information see: Pendant straps A-frame3 to jib head 2316, page 1578)

LWN/LR.x/V03.01//Auslieferung/2015-06-03/en

copyright by
LIEBHERR

– Luffing jib 2316 + midfall 2316 (For more information see: Pendant straps A-frame3 to jib head 2316, page 1675)

Generation A of jib pendant strap 12 m (40 ft)

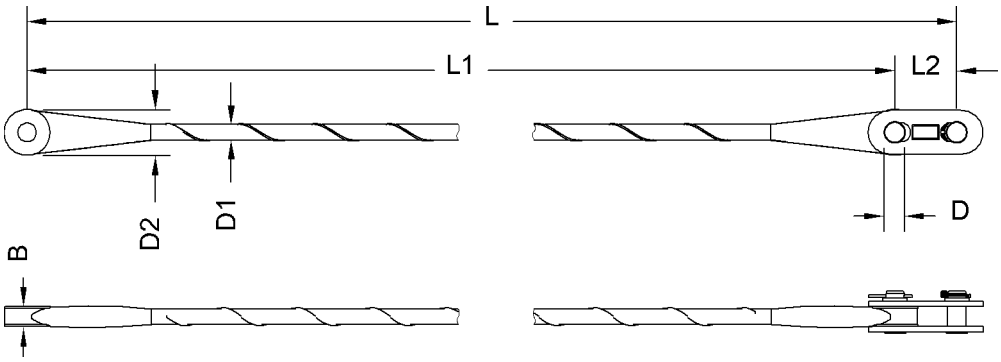

Fig. 345: Dimensions jib pendant strap 12 m (40 ft)

Name		Value
L	Length	12000 mm 39‘ 4“ ft-in
L1	Length of pendant strap	11800 mm 38‘ 9“ ft-in
L2	Length of connecting link	200 mm 7.87“ in
B	Width	64 mm 2.52“ in
D	Pin Ø	60 mm 2.36“ in
D1	Pendant strap Ø	50 mm 1.97“ in
D2	Pendant strap Ø	148 mm 5.83“ in
Weight		60 kg 132 lb

Tab. 211: Technical data jib pendant strap 12 m (40 ft)

LWN/LR.x/V03.01//Auslieferung/2015-06-03/en

copyright by
LIEBHERR

Generation B of jib pendant strap 12 m (40 ft)

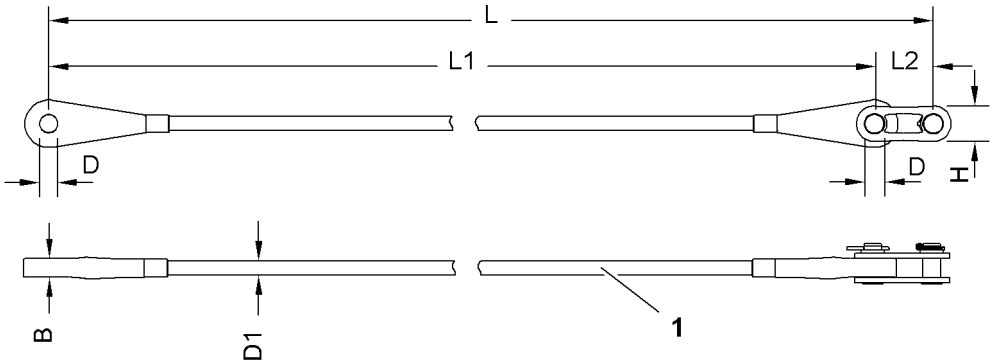

Fig. 346: Dimensions jib pendant strap 12 m (40 ft)

1 Wire mesh hose as protective sheath

Name		Value
L	Length	12000 mm 39‘ 4“ ft-in
L1	Length of pendant strap	11800 mm 38‘ 9“ ft-in
L2	Length of connecting link	200 mm 7.87“ in
B	Width	63 mm 2.48“ in
H	Height of connecting link	121 mm 4.76“ in
D	Pin Ø	60 mm 2.36“ in
D1	Pendant strap Ø	48 mm 1.89“ in
Weight		43 kg 94.80 lb

Tab. 212: Technical data jib pendant strap 12 m (40 ft)

CF pendant straps on jib head 2316.20

Jib pendant strap on jib head 2316.20

Installation site in crane operation:
- Luffing jib 2316 (For more information see: Pendant straps A-frame3 to jib head 2316, page 1578)
- Luffing jib 2316 + midfall 2316 (For more information see: Pendant straps A-frame3 to jib head 2316, page 1675)

LWN/LR.x/V03.01//Auslieferung/2015-06-03/en

copyright by
LIEBHERR

Generation A of jib pendant strap on jib head 2316.20

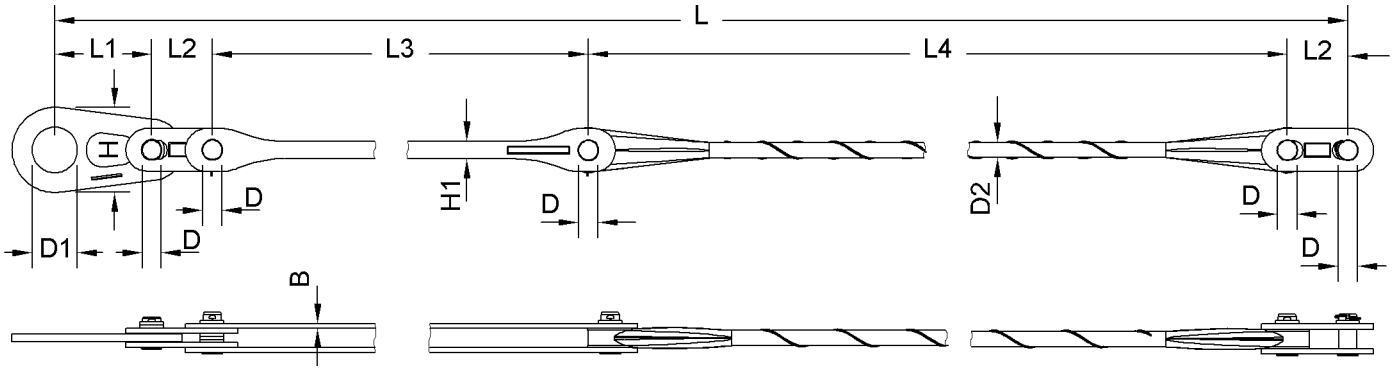

Fig. 347: Dimensions jib pendant strap on jib head 2316.20

Name		Value
L	Length	9540 mm 31‘ 4“ ft-in
L1	Length of connecting link	320 mm 1‘ 1“ ft-in
L2	Length of connecting link	200 mm 7.87“ in
L3	Length of pendant strap	3020 mm 9‘ 11“ ft-in
L4	Length of pendant strap	6000 mm 19‘ 8“ ft-in
W	Width of pendant strap	15 mm 0.59“ in
H	Height of connecting link	280 mm 11.02“ in
H1	Height of connecting link	55 mm 2.17“ in
D	Pin Ø	60 mm 2.36“ in
D1	Pin Ø	150 mm 5.91“ in
D2	Pendant strap Ø	50 mm 1.97“ in
Weight		119 kg 262 lb

Tab. 213: Technical data jib pendant strap on jib head 2316.20

LWN/LR.x/V03.01//Auslieferung/2015-06-03/en

copyright by
LIEBHERR

Generation B of jib pendant strap on jib head 2316.20

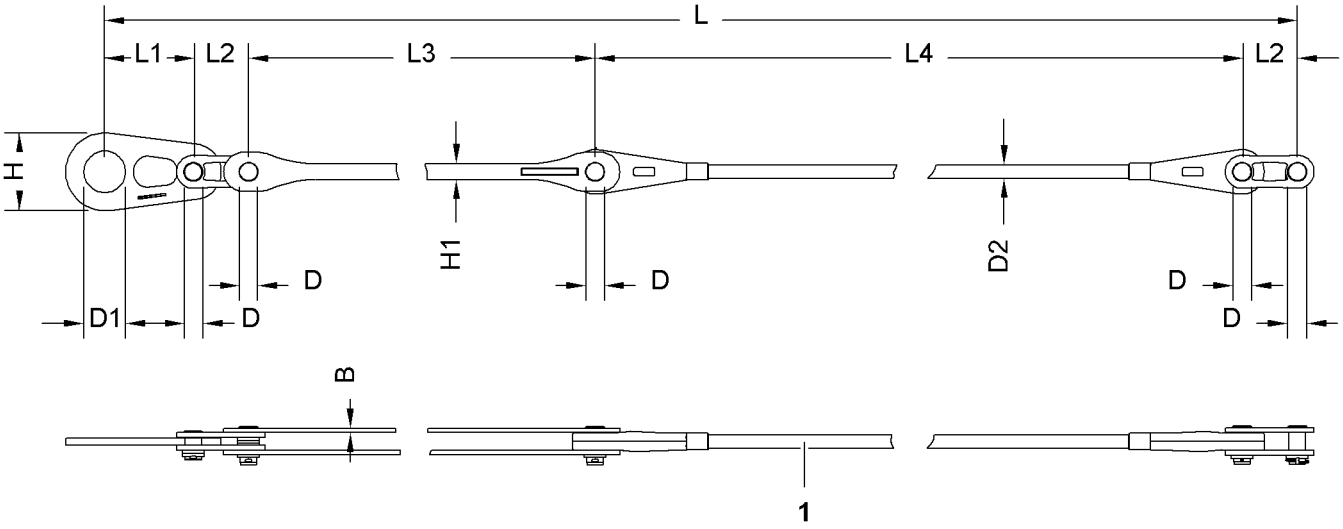

Fig. 348: Dimensions jib pendant strap on jib head 2316.20

1 Wire mesh hose as protective sheath

Name		Value
L	Length	9540 mm 31‘ 4“ ft-in
L1	Length of connecting link	320 mm 1‘ 1“ ft-in
L2	Length of connecting link	200 mm 7.87“ in
L3	Length of pendant strap	3020 mm 9‘ 11“ ft-in
L4	Length of pendant strap	6000 mm 19‘ 8“ ft-in
B	Width of pendant strap	15 mm 0.59“ in
H	Height of connecting link	280 mm 11.02“ in
H1	Height of pendant strap	57 mm 2.24“ in
D	Pin Ø	60 mm 2.36“ in
D1	Pin Ø	150 mm 5.91“ in
D2	Pendant strap Ø	48 mm 1.89“ in
Weight		111 kg 245 lb

Tab. 214: Technical data jib pendant strap on jib head 2316.20

LWN/LR.x/V03.01//Auslieferung/2015-06-03/en

copyright by
LIEBHERR

1.21 1916 luffing jib

1.21.1 Jib base section 1916.22

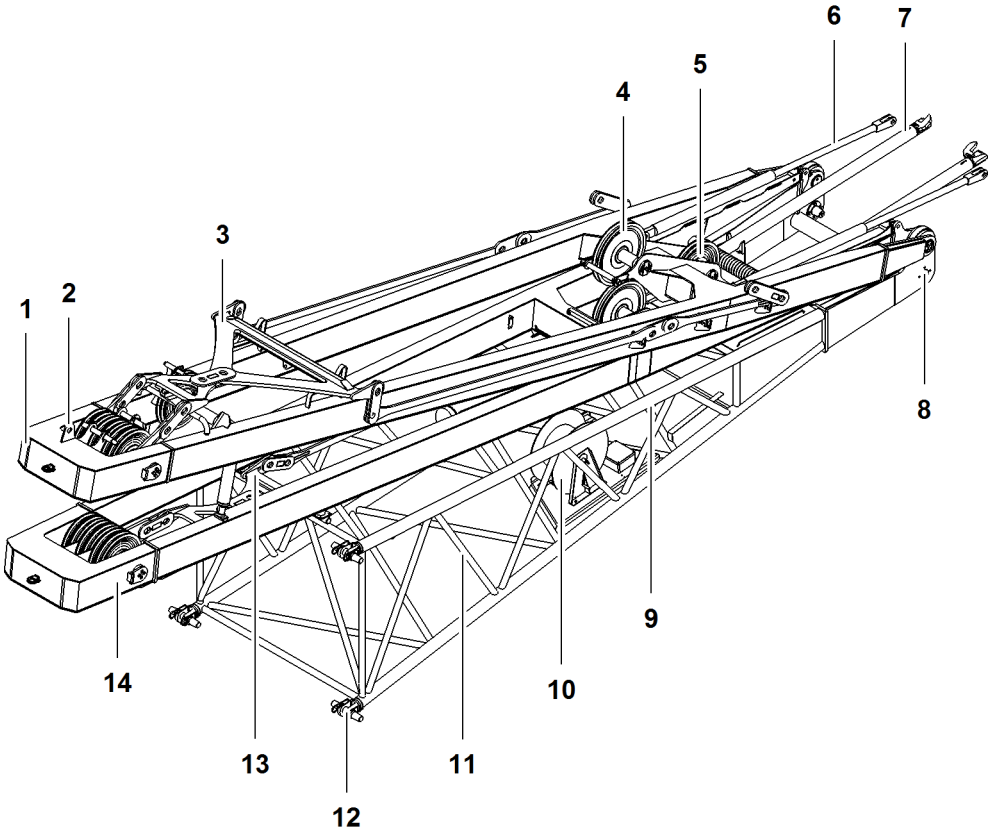

Fig. 349: Jib base section 1916.22

1	A-frame2	**8**	Pivot point (2x) for main boom head
2	Shackle	**9**	Rigging point (4x)
3	Transport position of A-frame2 equalizer (jib backstay straps)	**10**	Cable drum
4	Pulley (2x) for rope of winch1/ winch2	**11**	Boom identification plate
5	Pulley (2x) for rope of jib luffing winch	**12**	Pin connection point (4x) with double-taper pin (4x)
6	Rigid tilting-back support (2x)	**13**	Transport position of A-frame3 equalizer (jib pendant strap)
7	Hydraulic tilting-back support (2x)	**14**	A-frame3

LWN/LR.x/V03.01//Auslieferung/2015-06-03/en

copyright by
LIEBHERR

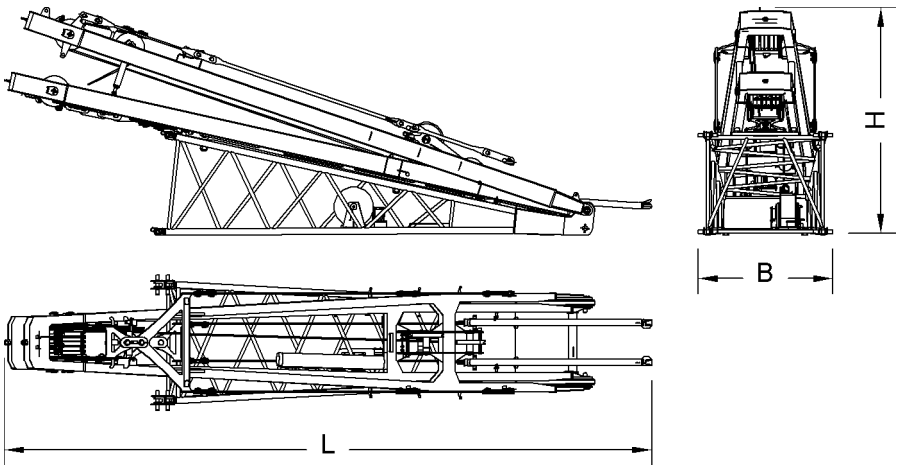

Fig. 350: Dimensions of jib base section 1916.22

Name		Value
System length		7000 mm 23‘ ft-in
System width		1900 mm 6‘ 3“ ft-in
System height		1600 mm 5‘ 3“ ft-in
L	Length	10850 mm 35‘ 7“ ft-in
B	Width	2010 mm 6‘ 7“ ft-in
H	Height	3150 mm 10‘ 4“ ft-in
Weight (incl. pendant straps, tilting-back supports and jib backstay straps)		6000 kg 13,228 lb
Double-taper pins Ø		60 mm 2.36“ in

Tab. 215: Technical data jib base section 1916.22

LWN/LR.x/V03.01//Auslieferung/2015-06-03/en

copyright by
LIEBHERR

1.21.2 1916.18 jib section 3 m (10 ft)

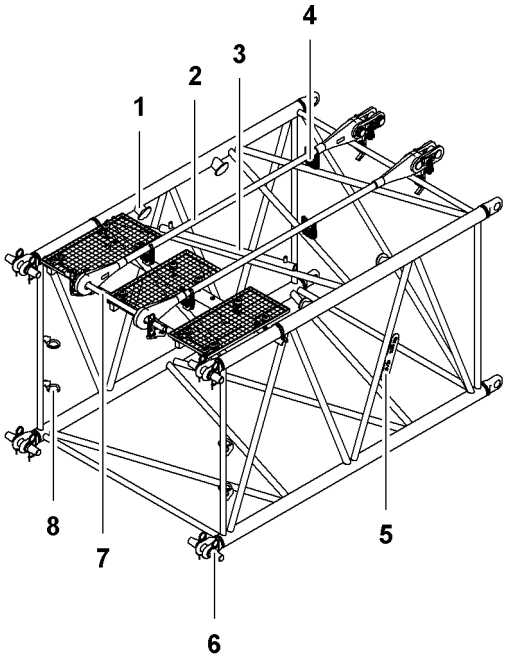

Fig. 351: Jib section 1916.18 3 m (10 ft)

1	Rigging point (4x)	**5**	Boom identification plate
2	Transport position (2x) of jib pendant straps 3 m (10 ft)	**6**	Pin connection point (8x) with double-taper pin (4x)
3	Rope protection guard	**7**	Transport bracket for pendant straps
4	Transport bracket (4x) for pendant straps	**8**	Transport bracket (4x) for double taper pin

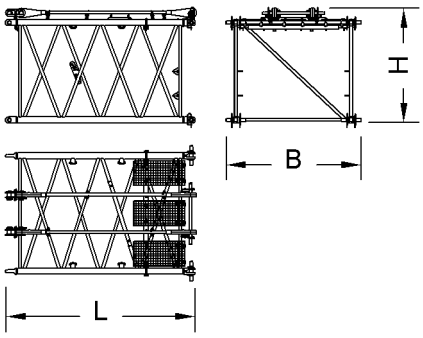

Fig. 352: Dimensions of 1916.18 jib section 3 m (10 ft)

Name	Value
System length	3000 mm 9‘ 10“ ft-in
System width	1900 mm 6‘ 3“ ft-in
System height	1600 mm 5‘ 3“ ft-in

LWN/LR.x/V03.01//Auslieferung/2015-06-03/en

copyright by
LIEBHERR

Name		Value
L	Length	3150 mm 10‘ 4“ ft-in
B	Width	2010 mm 6‘ 7“ ft-in
H	Height (incl. pendant straps)	1850 mm 6‘ 1“ ft-in
Weight (incl. pendant straps)		475 kg 1,047 lb
Double-taper pins Ø		60 mm 2.36“ in

Tab. 216: Technical data for 1916.18 jib section 3 m (10 ft)

1.21.3 1916.18 jib section 6 m (20 ft)

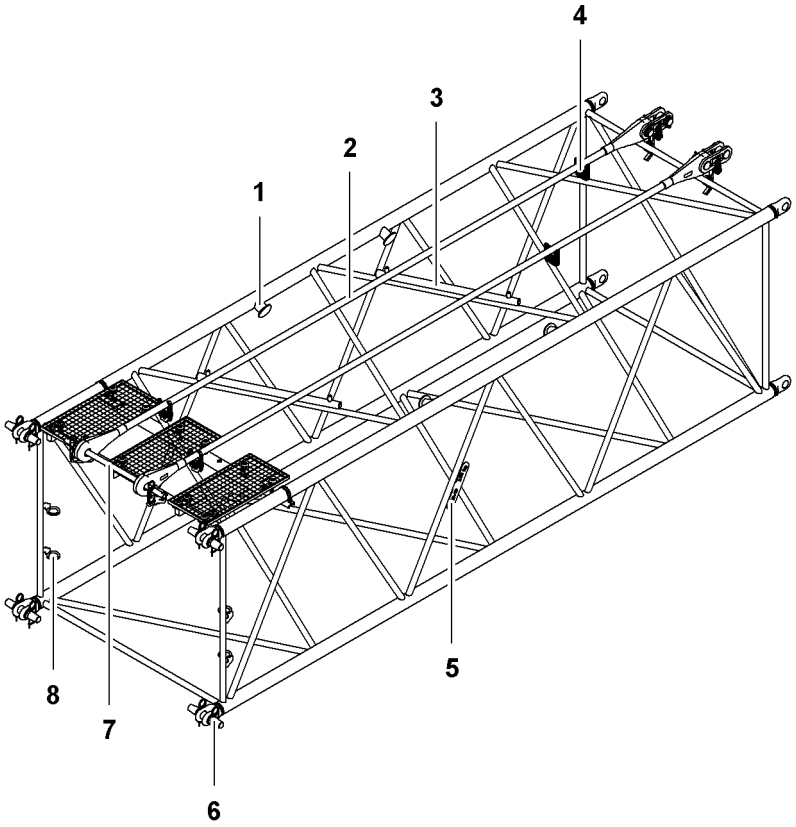

Fig. 353: Jib section 1916.18 6 m (20 ft)

1 Rigging point (4x)
2 Transport position (2x) of jib pendant straps 6 m (20 ft)
3 Rope protection guard (2x)
4 Transport bracket (4x) for pendant straps
5 Boom identification plate
6 Pin connection point (8x) with double-taper pin (4x)
7 Transport bracket for pendant straps
8 Transport bracket (4x) for double taper pin

LWN/LR.x/V03.01//Auslieferung/2015-06-03/en

copyright by
LIEBHERR

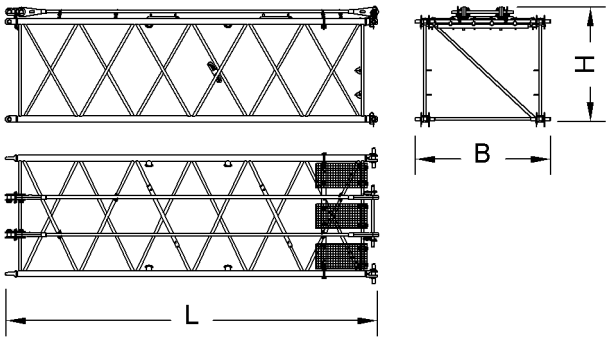

Fig. 354: Dimensions jib section 1916.18 6 m (20 ft)

Name		Value
System length		6000 mm 19‘ 8“ ft-in
System width		1900 mm 6‘ 3“ ft-in
System height		1600 mm 5‘ 3“ ft-in
L	Length	6150 mm 20‘ 2“ ft-in
B	Width	2010 mm 6‘ 7“ ft-in
H	Height (incl. pendant straps)	1850 mm 6‘ 1“ ft-in
Weight (incl. pendant straps)		690 kg 1,521 lb
Double-taper pins Ø		60 mm 2.36“ in

Tab. 217: Technical data for 1916.18 jib section 6 m (20 ft)

LWN/LR.x/V03.01//Auslieferung/2015-06-03/en

copyright by
LIEBHERR

1.21.4 1916.18 jib section 12 m (40 ft)

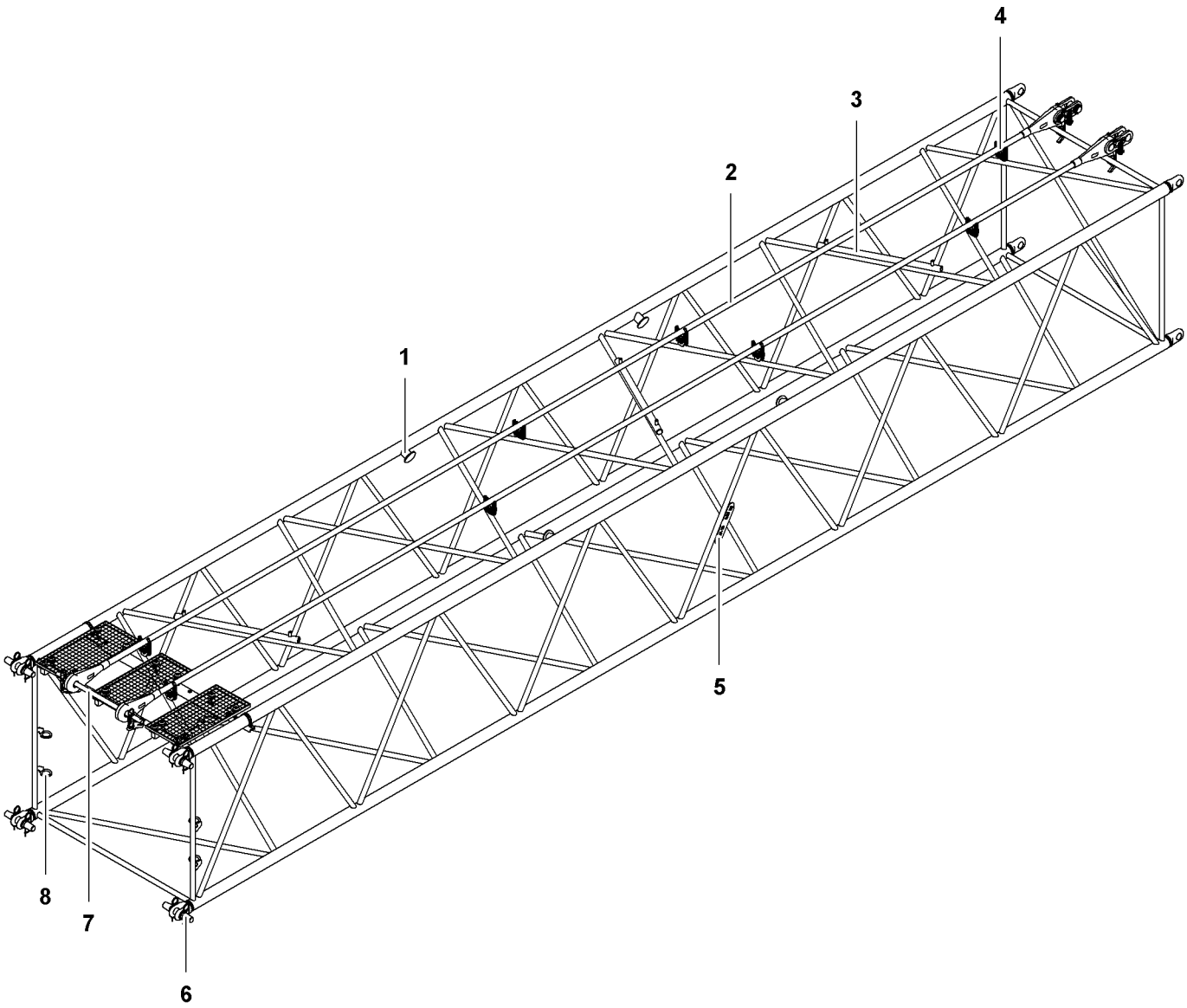

Fig. 355: Jib section 1916.18 12 m (40 ft)

1 Rigging point (4x)

2 Transport position (2x) of jib pendant straps 12 m (40 ft)

3 Rope protection guard (3x)

4 Transport bracket (8x) for pendant straps

5 Boom identification plate

6 Pin connection point (8x) with double-taper pin (4x)

7 Transport bracket for pendant straps

8 Transport bracket (4x) for double taper pin

LWN/LR.x/V03.01//Auslieferung/2015-06-03/en

copyright by LIEBHERR

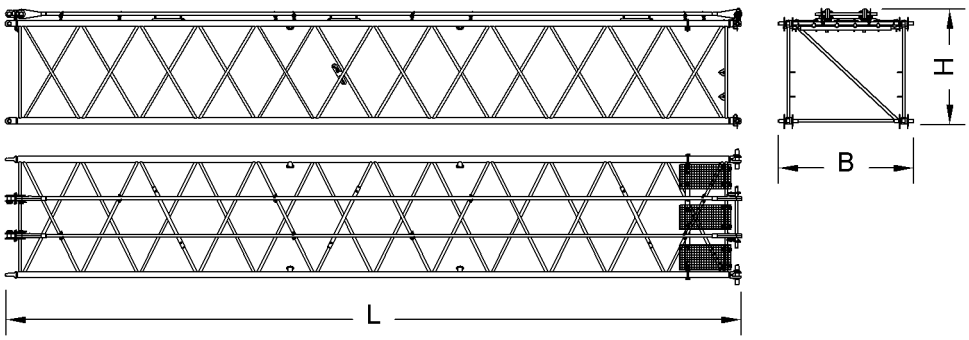

Fig. 356: Dimensions jib section 1916.18 12 m (40 ft)

Name		Value
System length		12000 mm 39‘ 4“ ft-in
System width		1900 mm 6‘ 3“ ft-in
System height		1600 mm 5‘ 3“ ft-in
L	Length	12150 mm 39‘ 10“ ft-in
B	Width	2010 mm 6‘ 7“ ft-in
H	Height (incl. pendant straps)	1850 mm 6‘ 1“ ft-in
Weight (incl. pendant straps)		1250 kg 2,756 lb
Double-taper pins Ø		60 mm 2.36“ in

Tab. 218: Technical data for 1916.18 jib section 12 m (40 ft)

LWN/LR.x/V03.01//Auslieferung/2015-06-03/en

copyright by
LIEBHERR

1.21.5 1916.21 jib head section

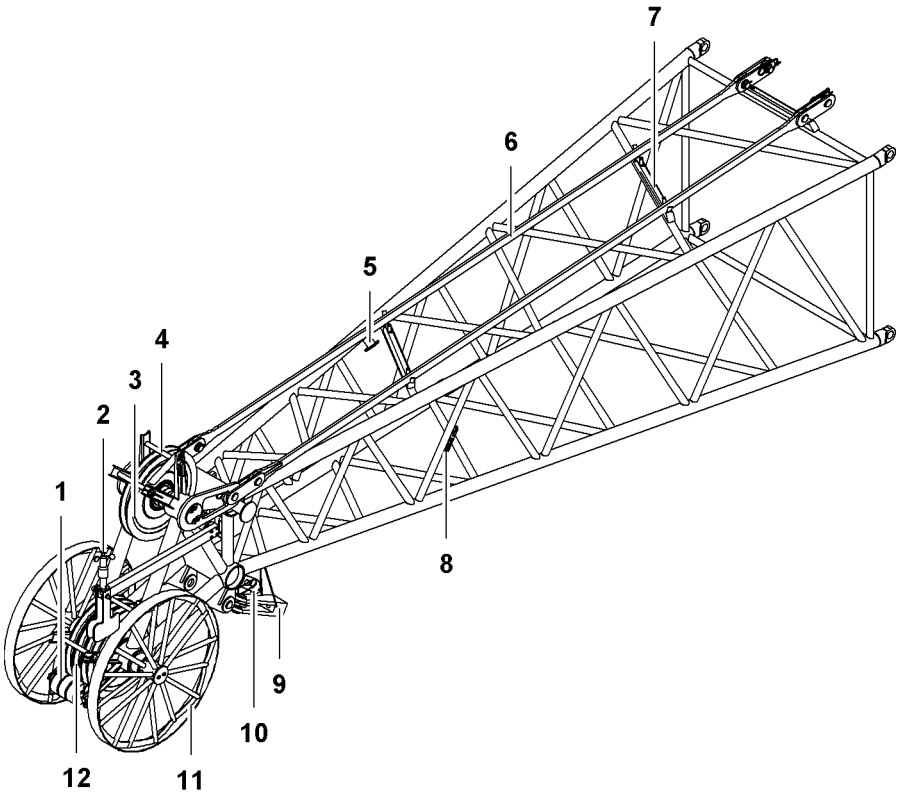

Fig. 357: 1916.21 jib head section

1	Rope protection roller (3x)	**7**	Rope guard support (2x)
2	Anemometer	**8**	Boom identification plate
3	Pulley	**9**	Rope fixation
4	Rope protection pipe (2x)	**10**	Hoist limit switch (2x)
5	Lifting point (4x)	**11**	Wheel (2x)
6	Transport position (2x) of jib pendant straps	**12**	Pulley (3x)

This jib head section is designed to allow an auxiliary jib to be attached (For more information see: 1.27 Auxiliary jib* (15 t (33.000 lb)), page 377) .

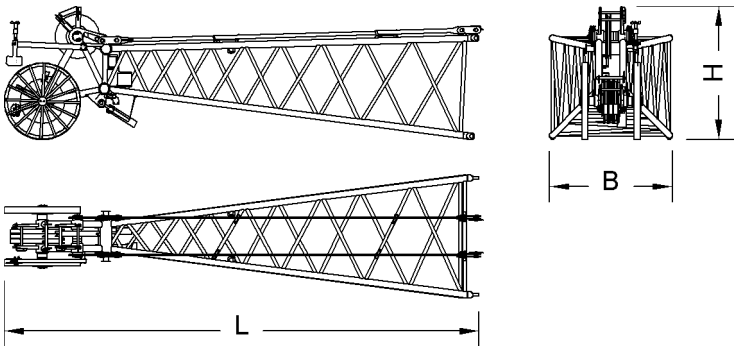

Fig. 358: 1916.21 jib head section dimensions

LWN/LR.x/V03.01//Auslieferung/2015-06-03/en

Name		Value
System length		7000 mm 23‘ ft-in
System width		1900 mm 6‘ 3“ ft-in
System height		1600 mm 5‘ 3“ ft-in
L	Length	7750 mm 25‘ 5“ ft-in
B	Width	2010 mm 6‘ 7“ ft-in
H	Height	2200 mm 7‘ 3“ ft-in
Weight (incl. pendant straps)		1420 kg 3,131 lb

Tab. 219: 1916.21 jib head section, technical data

1.21.6 Mid-point suspension on luffing jib 1916

The mid-point suspensions on luffing jib 1916 differ with steel pendant straps and CF pendant straps.

LWN/LR.x/V03.01//Auslieferung/2015-06-03/en

copyright by
LIEBHERR

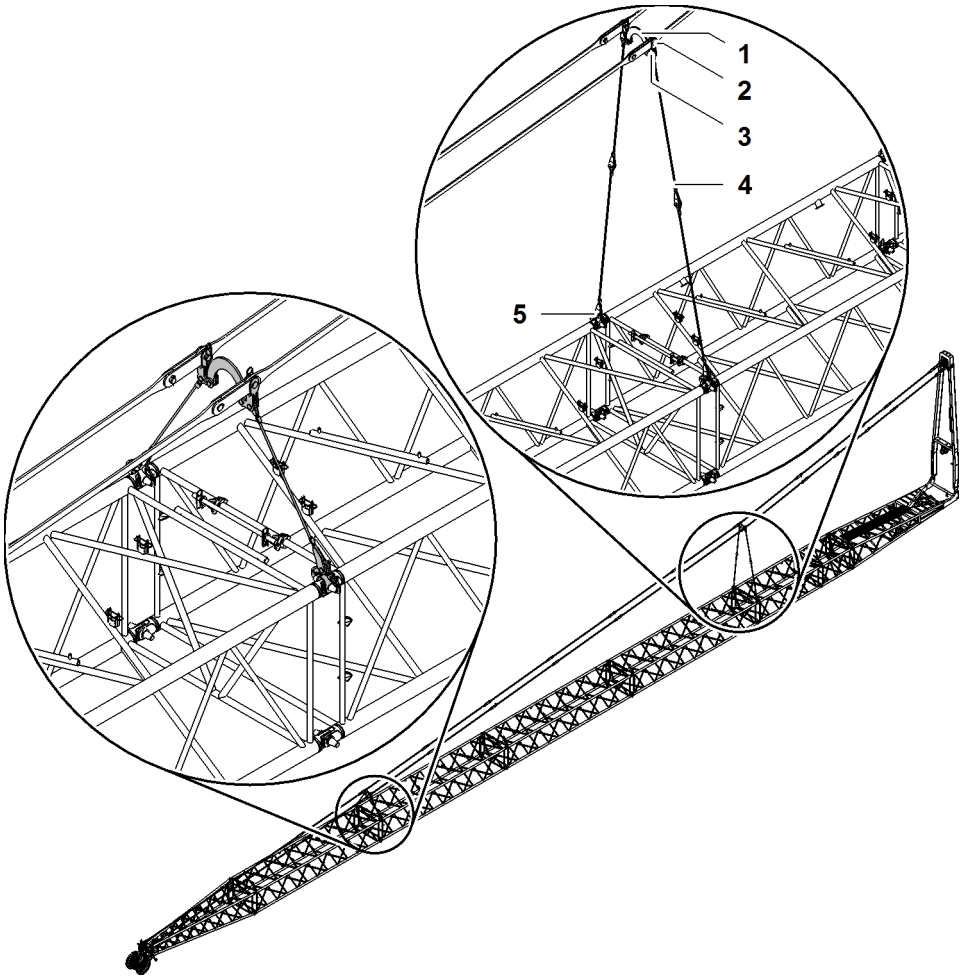

Fig. 359: Mid-point suspension on luffing jib 1916 (illustration of principle)

1 Connecting element (2x)
2 Spacer bracket
3 Pin (2x) for pendant straps
4 Stay ropes
5 Fork (2x)

LWN/LR.x/V03.01//Auslieferung/2015-06-03/en

copyright by
LIEBHERR

Connecting elements for steel pendant straps

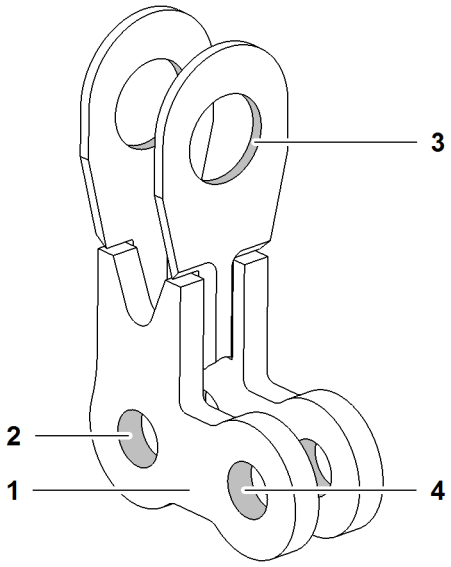

Fig. 360: Connecting elements for steel pendant straps (illustration of principle)

1	Connecting element	**3**	Pin connection point for pendant strap
2	Pin connection point for stay rope	**4**	Pin connection point for spacer bracket

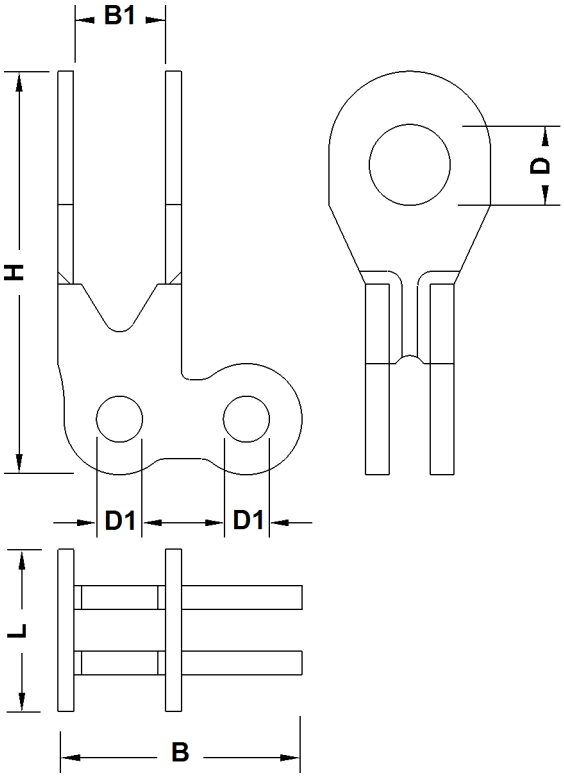

Fig. 361: Dimensions connecting elements for steel pendant straps

LWN/LR.x/V03.01//Auslieferung/2015-06-03/en

copyright by
LIEBHERR

Name		Value
L	Length	102 mm 4.02“ in
H	Height	354 mm 1‘ 2“ ft-in
B	Width	190 mm 7.48“ in
B1	Width between links	58 mm 2.28“ in
D	Pin Ø	50 mm 1.97“ in
D1	Pin Ø	35 mm 1.38“ in

Tab. 220: Technical data connecting elements for steel pendant straps

Connecting elements for CF pendant straps

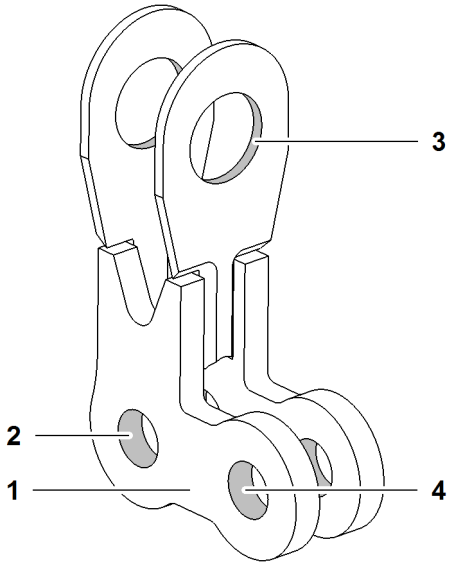

Fig. 362: Connecting elements for CF pendant straps (illustration of principle)

1 Connecting element

2 Pin connection point for stay rope

3 Pin connection point for pendant strap

4 Pin connection point for spacer bracket

LWN/LR.x/V03.01//Auslieferung/2015-06-03/en

copyright by
LIEBHERR

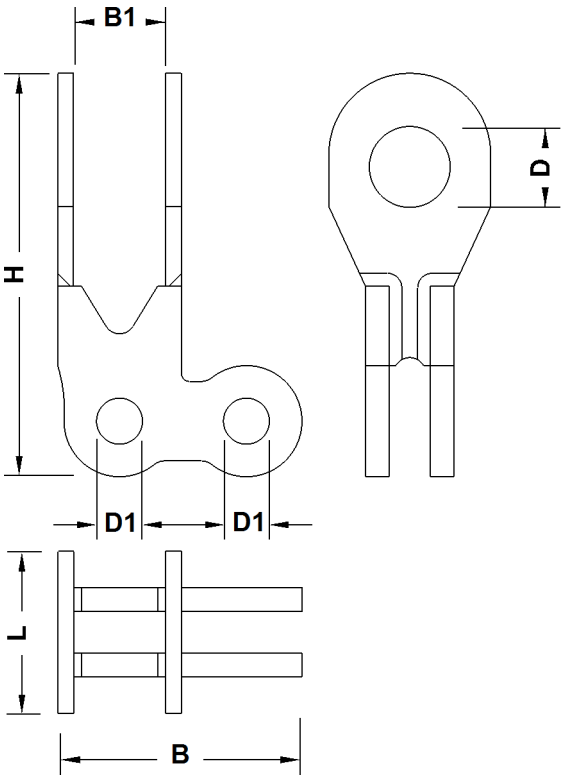

Fig. 363: Dimensions connecting elements for CF pendant straps

Name		Value
L	Length	110 mm 4.33“ in
H	Height	358 mm 1‘ 2“ ft-in
B	Width	207 mm 8.15“ in
B1	Width between link	104 mm 4.09“ in
D	Pin Ø	60 mm 2.36“ in
D1	Pin Ø	35 mm 1.38“ in

Tab. 221: Technical data connecting elements for CF pendant straps

LWN/LR.x/V03.01//Auslieferung/2015-06-03/en

copyright by
LIEBHERR

Forks

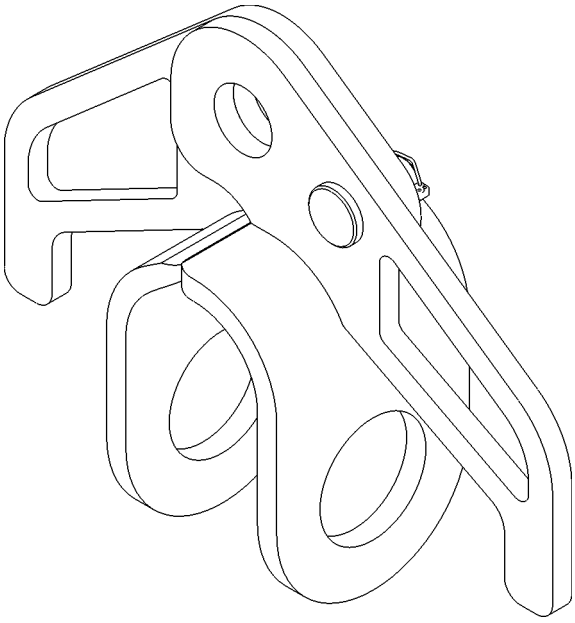

Fig. 364: Forks (illustration of principle)

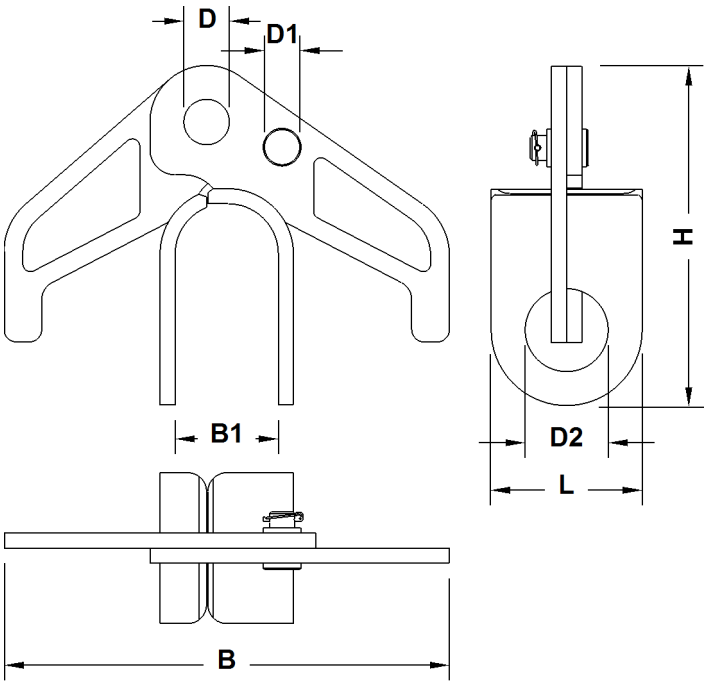

Fig. 365: Fork dimensions

Name		Value
L	Length	100 mm 3.94“ in
B	Width	395 mm 1‘ 4“ ft-in

LWN/LR.x/V03.01//Auslieferung/2015-06-03/en

copyright by
LIEBHERR

Name		Value
B1	Inner width	106 mm 4.17“ in
H	Height	260 mm 10.24“ in
D	Pin Ø	35 mm 1.38“ in
D1	Pin Ø	20 mm 0.79“ in
D2	Pin Ø	60 mm 2.36“ in

Tab. 222: Technical data forks

Spacer bracket

The spacer brackets are identical with steel pendant straps and CF pendant straps.

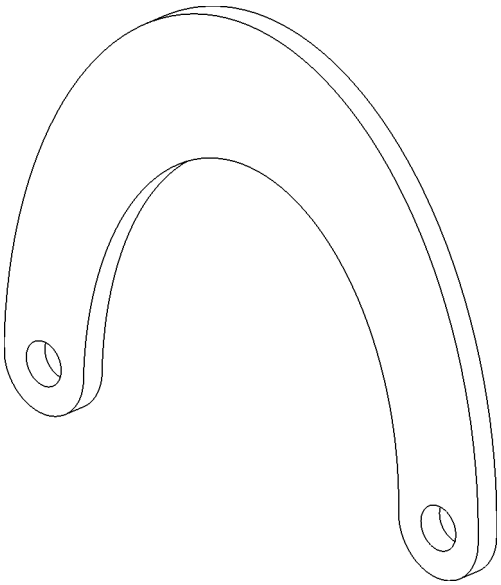

Fig. 366: Spacer brackets (illustration of principle)

LWN/LR.x/V03.01//Auslieferung/2015-06-03/en

copyright by
LIEBHERR

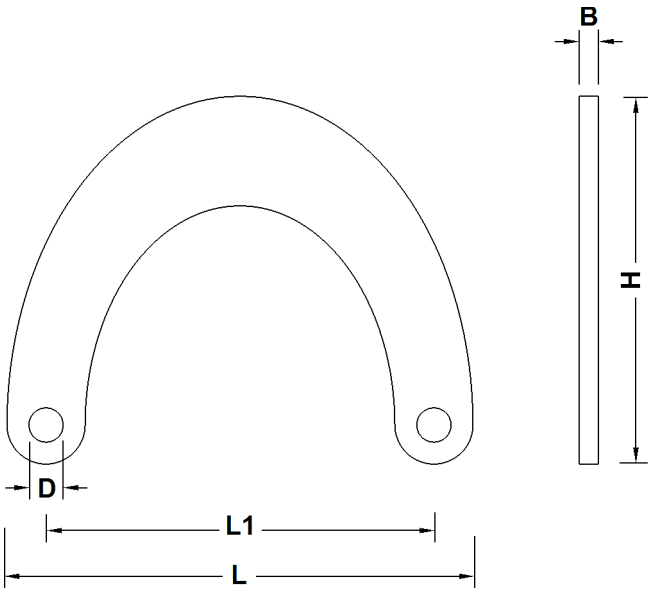

Fig. 367: Dimensions spacer brackets

Name		Value
L	Length	489 mm 1‘ 7“ ft-in
L1	Distance between pins	407 mm 1‘ 4“ ft-in
B	Width	20 mm 0.79“ in
H	Height	386 mm 1‘ 3“ ft-in
D	Pin Ø	35 mm 1.38“ in

Tab. 223: Technical data spacer brackets

Stay ropes

Several stay ropes are assembled to achieve defined rope lengths.

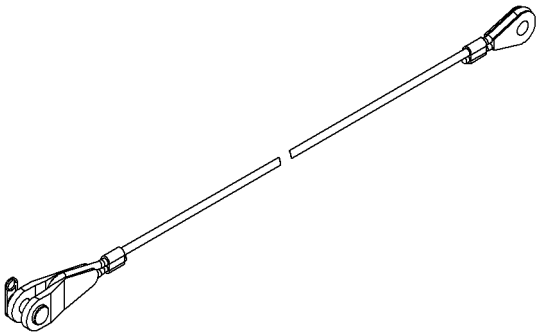

Fig. 368: Stay ropes (illustration of principle)

LWN/LR.x/V03.01//Auslieferung/2015-06-03/en

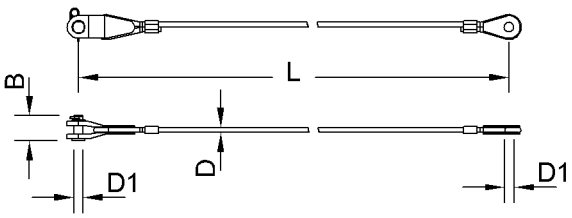

Fig. 369: Dimensions stay ropes

Name		Value
L	Length of stay rope	1100 mm 3‘ 7“ ft-in
		1300 mm 4‘ 3“ ft-in
		1600 mm 5‘ 3“ ft-in
		2100 mm 6‘ 11“ ft-in
		2600 mm 8‘ 6“ ft-in
		3000 mm 9‘ 10“ ft-in
D	Ø of stay rope	18 mm 0.71“ in
D1	Pin Ø	35 mm 1.38“ in
B	Length of pin	90 mm 3.54“ in

Tab. 224: Technical data stay ropes

Pins for steel pendant straps

The pins supplied with the pendant straps must be exchanged for longer pins.

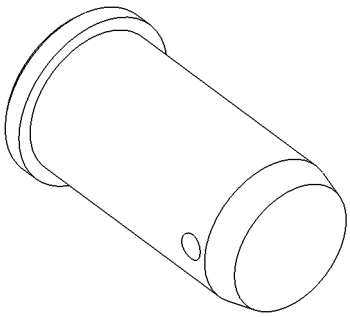

Fig. 370: Pins for steel pendant straps (illustration of principle)

LWN/LR.x/V03.01//Auslieferung/2015-06-03/en

copyright by
LIEBHERR

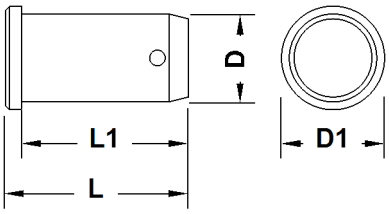

Fig. 371: Dimensions pins for steel pendant straps

Name		Value
L	Total length	120 mm 4.72“ in
L1	Length	112 mm 4.41“ in
D	Pin Ø	50 mm 1.97“ in
D1	Collar Ø	58 mm 2.28“ in

Tab. 225: Technical data pins for steel pendant straps

Pins for CF pendant straps

The pins supplied with the pendant straps must be exchanged for longer pins.

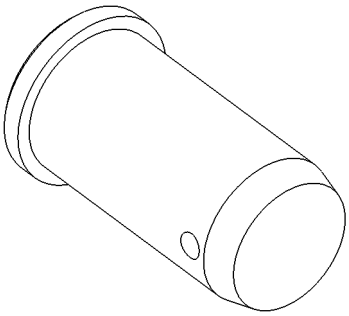

Fig. 372: Pins for CF pendant straps (illustration of principle)

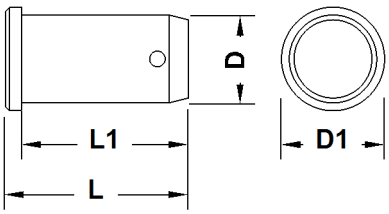

Fig. 373: Dimensions pins for CF pendant straps

Name		Value
L	Total length	158 mm 6.22“ in
L1	Length	153 mm 6.02“ in

LWN/LR.x/V03.01//Auslieferung/2015-06-03/en

Name		Value
D	Pin Ø	60 mm 2.36“ in
D1	Collar Ø	68 mm 2.68“ in

Tab. 226: Technical data pins for CF pendant straps

1.21.7 Steel pendant straps on luffing jib 1916

Steel pendant straps on A-frame2

Equalizer A-frame2 (jib backstay strap)

Installation site in crane operation:
- Luffing jib 1916 (For more information see: Jib backstay straps A-frame2 to main boom base section 2821, page 1594)
- Luffing jib 1916 + midfall 1916 (For more information see: Jib backstay straps A-frame2 to main boom base section 2821, page 1685)

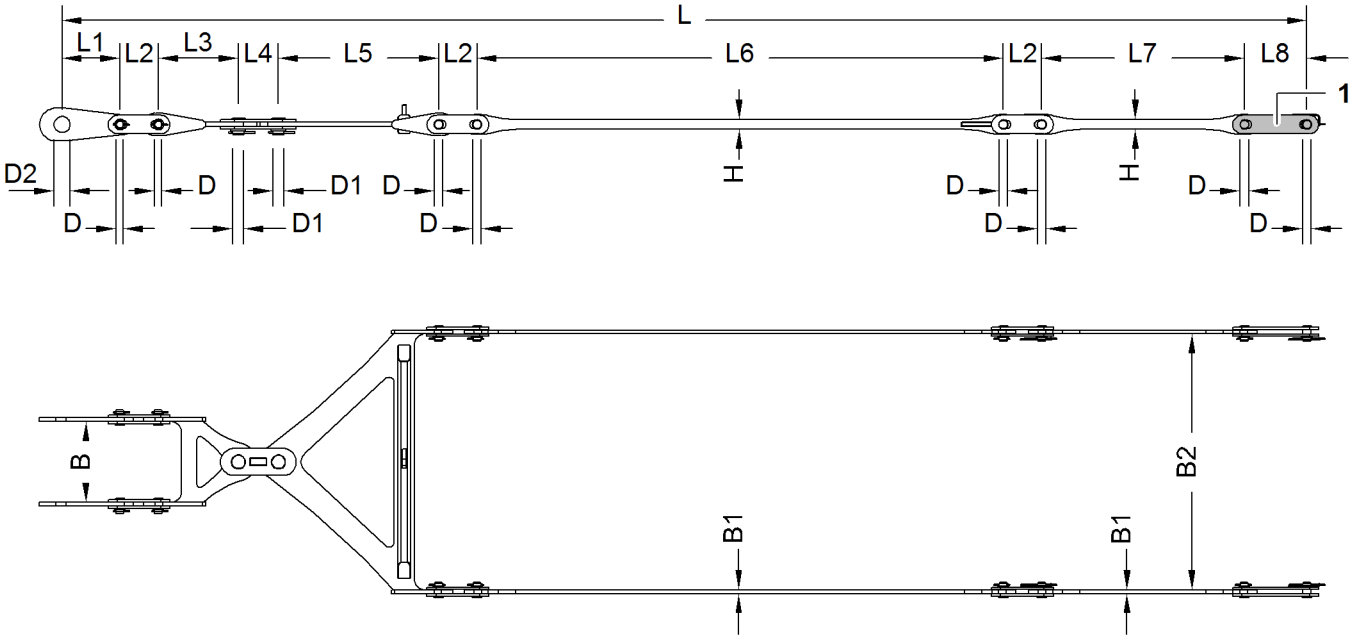

Fig. 374: Dimensions equalizer on A-frame2 (jib backstay strap)

1 Connecting link (4x)

When attaching the luffing jib 1916 to the machine, replace the connecting link **1** with a “connecting link (conversion kit)” (For more information see: Connecting link (conversion kit), page 349) .

Name		Value
L	Length	7769 mm 25‘ 6“ ft-in
L1	Length of connecting link	360 mm 1‘ 2“ ft-in

LWN/LR.x/V03.01//Auslieferung/2015-06-03/en

copyright by
LIEBHERR

Name		Value
L2	Length of connecting link	240 mm 9.45“ in
L3	Length of rocker	500 mm 1‘ 8“ ft-in
L4	Length of connecting link	250 mm 9.84“ in
L5	Length of rocker	1000 mm 3‘ 3“ ft-in
L6	Length of pendant strap	3284 mm 10‘ 9“ ft-in
L7	Length of pendant strap	1265 mm 4‘ 2“ ft-in
L8	Length of connecting link	390 mm 1‘ 3“ ft-in
B	Width	527 mm 1‘ 9“ ft-in
B1	Width of pendant strap	22 mm 0.87“ in
B2	Width of spacer bar	1620 mm 5‘ 4“ ft-in
H	Height of pendant strap	62 mm 2.44“ in
D	Pin Ø	50 mm 1.97“ in
D1	Pin Ø	70 mm 2.76“ in
D2	Pin Ø	100 mm 3.94“ in
Weight		462 kg 1,019 lb

Tab. 227: Technical data equalizer on A-frame2 (jib backstay strap)

Steel pendant straps on A-frame3

A-frame3 equalizer (jib pendant strap)

Installation site in crane operation:
- Luffing jib 1916 (For more information see: Pendant straps A-frame3 to jib head 1916, page 1595)
- Luffing jib 1916 + midfall 1916 (For more information see: Pendant straps A-frame3 to jib head 1916, page 1686)

LWN/LR.x/V03.01//Auslieferung/2015-06-03/en

copyright by
LIEBHERR

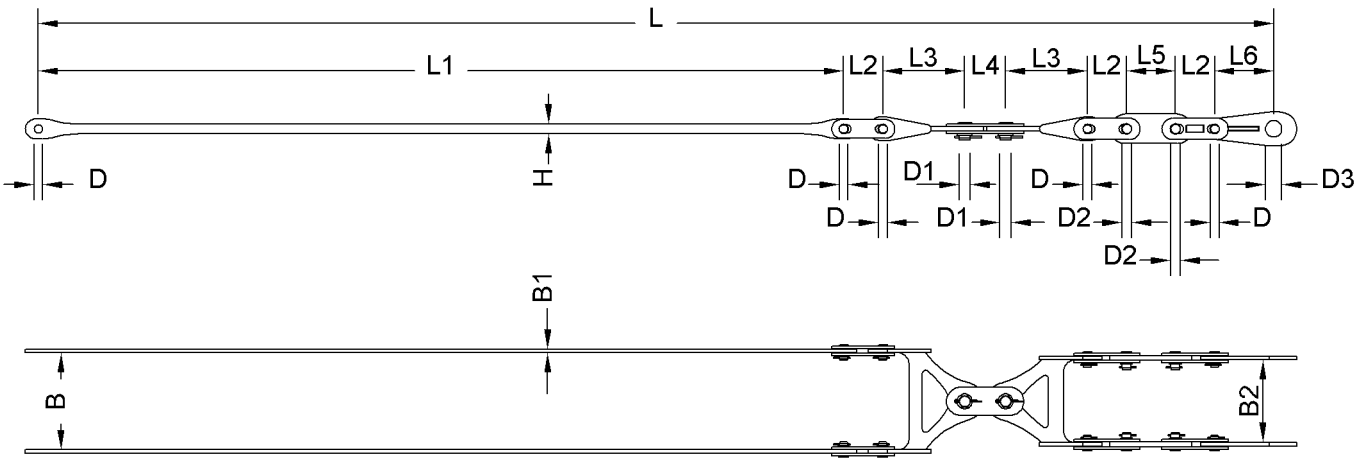

Fig. 375: Dimensions equalizer on A-frame3 (jib pendant strap)

Name		Value
L	Length	7550 mm 24‘ 9“ ft-in
L1	Length of pendant strap	4922 mm 16‘ 2“ ft-in
L2	Length of connecting link	240 mm 9.45“ in
L3	Length of rocker	500 mm 1‘ 8“ ft-in
L4	Length of connecting link	250 mm 9.84“ in
L5	Length of tension load cell	298 mm 1‘ ft-in
L6	Length of connecting link	360 mm 1‘ 2“ ft-in
B	Width	614 mm 2‘ ft-in
B1	Width of pendant strap	22 mm 0.87“ in
B2	Width	527 mm 1‘ 9“ ft-in
H	Height of pendant strap	62 mm 2.44“ in
D	Pin Ø	50 mm 1.97“ in
D1	Pin Ø	70 mm 2.76“ in
D2	Pin Ø	55 mm 2.17“ in
D3	Pin Ø	100 mm 3.94“ in

LWN/LR.x/V03.01//Auslieferung/2015-06-03/en

copyright by
LIEBHERR

Name	Value
Weight	332 kg 732 lb

Tab. 228: Technical data A-frame3 equalizer (jib pendant strap)

Steel pendant straps on jib section 1916.18 3 m (10 ft)

Jib pendant strap 3 m (10 ft)

Installation site in crane operation:
- Luffing jib 1916 (For more information see: Pendant straps A-frame3 to jib head 1916, page 1595)
- Luffing jib 1916 + midfall 1916 (For more information see: Pendant straps A-frame3 to jib head 1916, page 1686)

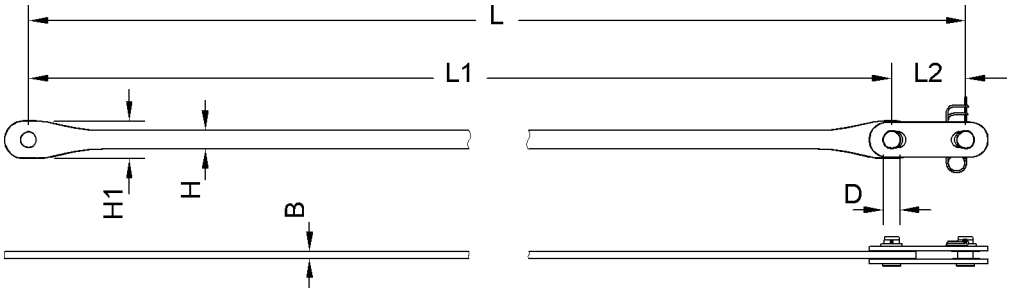

Fig. 376: Dimensions jib pendant strap 3 m (10 ft)

Name		Value
L	Length	3000 mm 9‘ 10“ ft-in
L1	Length of pendant strap	2760 mm 9‘ 1“ ft-in
L2	Length of connecting link	240 mm 9.45“ in
W	Width of pendant strap	22 mm 0.87“ in
H	Height of pendant strap	62 mm 2.44“ in
H1	Height of pendant strap	120 mm 4.72“ in
D	Pin Ø	50 mm 1.97“ in
Weight		46 kg 101 lb

Tab. 229: Technical data jib pendant strap3 m (10 ft)

LWN/LR.x/V03.01//Auslieferung/2015-06-03/en

copyright by
LIEBHERR

Steel pendant straps on jib section 1916.18 6 m (20 ft)

Jib pendant strap 6 m (20 ft)

Installation site in crane operation:
- Luffing jib 1916 (For more information see: Pendant straps A-frame3 to jib head 1916, page 1595)
- Luffing jib 1916 + midfall 1916 (For more information see: Pendant straps A-frame3 to jib head 1916, page 1686)

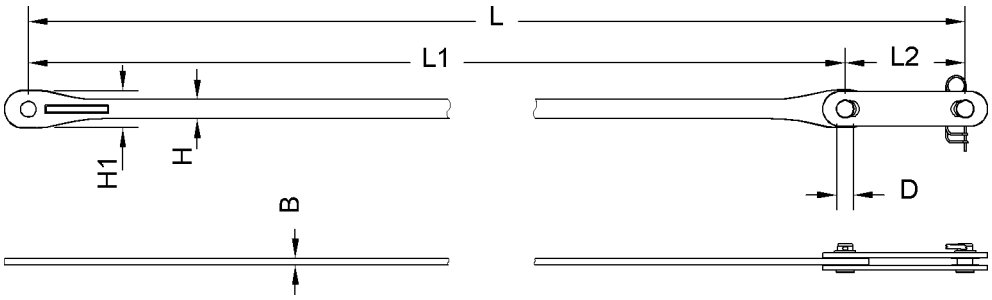

Fig. 377: Dimensions jib pendant strap 6 m (20 ft)

Name		Value
L	Length	6000 mm 19‘ 8“ ft-in
L1	Length of pendant strap	5610 mm 18‘ 5“ ft-in
L2	Length of connecting link	390 mm 1‘ 3“ ft-in
W	Width of pendant strap	22 mm 0.87“ in
H	Height of pendant strap	62 mm 2.44“ in
H1	Height of pendant strap	120 mm 4.72“ in
D	Pin Ø	50 mm 1.97“ in
Weight		80 kg 176 lb

Tab. 230: Technical data jib pendant strap 6 m (20 ft)

Steel pendant straps on jib section 1916.18 12 m (40 ft)

Jib pendant strap 12 m (40 ft)

Installation site in crane operation:
- Luffing jib 1916 (For more information see: Pendant straps A-frame3 to jib head 1916, page 1595)
- Luffing jib 1916 + midfall 1916 (For more information see: Pendant straps A-frame3 to jib head 1916, page 1686)

LWN/LR.x/V03.01//Auslieferung/2015-06-03/en

copyright by
LIEBHERR

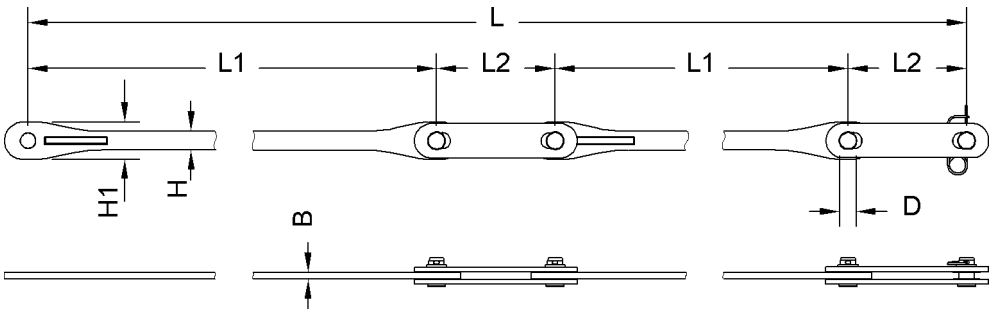

Fig. 378: Dimensions jib pendant strap 12 m (40 ft)

Name		Value
L	Length	12000 mm 39‘ 4“ ft-in
L1	Length of pendant strap	5610 mm 18‘ 5“ ft-in
L2	Length of connecting link	390 mm 1‘ 3“ ft-in
W	Width of pendant strap	22 mm 0.87“ in
H	Height of pendant strap	62 mm 2.44“ in
H1	Height of pendant strap	120 mm 4.72“ in
D	Pin Ø	50 mm 1.97“ in
Weight		160 kg 353 lb

Tab. 231: Technical data jib pendant strap 12 m (40 ft)

Steel pendant straps on jib head 1916.21

Jib pendant strap on jib head 1916.21

Installation site in crane operation:
- Luffing jib 1916 (For more information see: Pendant straps A-frame3 to jib head 1916, page 1595)
- Luffing jib 1916 + midfall 1916 (For more information see: Pendant straps A-frame3 to jib head 1916, page 1686)

LWN/LR.x/V03.01//Auslieferung/2015-06-03/en

copyright by
LIEBHERR

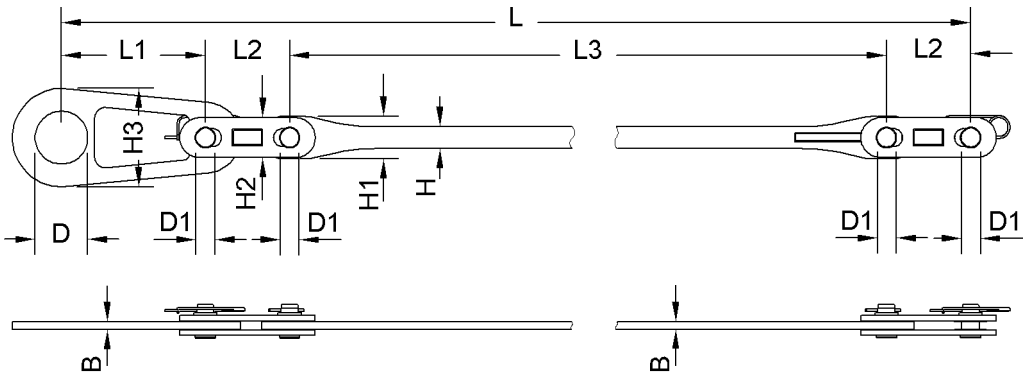

Fig. 379: Dimensions jib pendant strap on jib head 1916.21

Name		Value
L	Length	6500 mm 21‘ 4“ ft-in
L1	Length of connecting link	410 mm 1‘ 4“ ft-in
L2	Length of connecting link	240 mm 9.45“ in
L3	Length of pendant strap	6090 mm 20‘ ft-in
W	Width of pendant strap	22 mm 0.87“ in
H	Height of pendant strap	62 mm 2.44“ in
H1	Height of pendant strap	122 mm 4.80“ in
H2	Height of connecting link	113 mm 4.45“ in
H3	Height of connecting link	240 mm 9.45“ in
D	Pin Ø	150 mm 5.91“ in
D1	Pin Ø	50 mm 1.97“ in
Weight		95 kg 209 lb

Tab. 232: Technical data jib pendant strap on jib head 1916.21

Additional pendant straps/connecting links for luffing jib 1916

Connecting link (conversion kit)

Installation site in crane operation:
– Luffing jib 1916 (For more information see: Pendant straps A-frame3 to jib head 1916, page 1595)

LWN/LR.x/V03.01//Auslieferung/2015-06-03/en

copyright by
LIEBHERR

– Luffing jib 1916 + midfall 1916 (For more information see: Pendant straps A-frame3 to jib head 1916, page 1686)

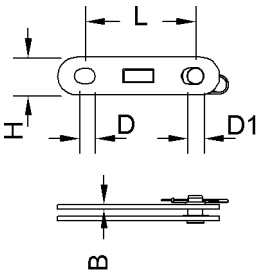

Fig. 380: Dimensions connecting link (conversion kit)

Name		Value
L	Length of connecting link	390 mm 1‘ 3“ ft-in
W	Width of connecting link	15 mm 0.59“ in
H	Height of connecting link	130 mm 5.12“ in
D	Pin Ø	50 mm 1.97“ in
D1	Pin Ø	55 mm 2.17“ in
Weight		16.5 kg 36.38 lb

Tab. 233: Technical data connecting link (conversion kit)

1.21.8 CF pendant straps on luffing jib 1916

CF pendant straps on A-frame2

Equalizer A-frame2 (jib backstay strap)

Installation site in crane operation:
– Luffing jib 1916 (For more information see: Jib backstay straps A-frame2 to main boom base section 2821, page 1596)
– Luffing jib 1916 + midfall 1916 (For more information see: Jib backstay straps A-frame2 to main boom base section 2821, page 1687)

LWN/LR.x/V03.01//Auslieferung/2015-06-03/en

copyright by
LIEBHERR

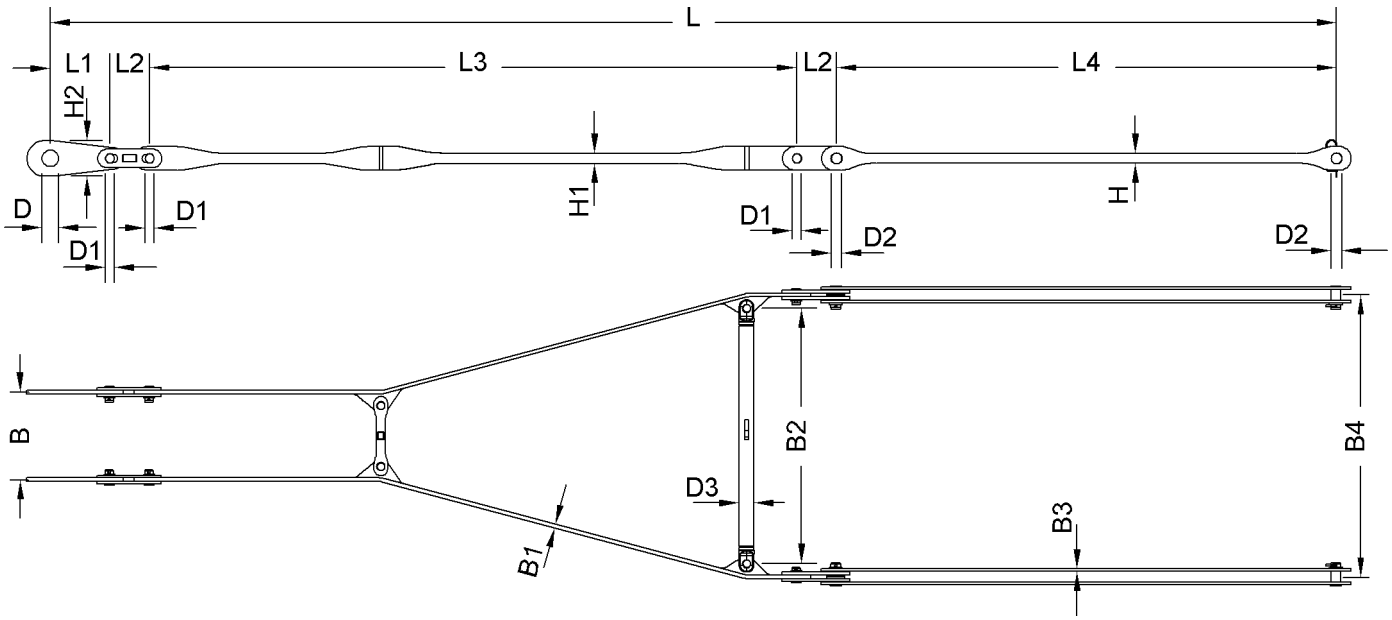

Fig. 381: Dimensions equalizer on A-frame2 (jib backstay strap)

Name		Value
L	Length	7769 mm 25‘ 6“ ft-in
L1	Length of connecting link	360 mm 1‘ 2“ ft-in
L2	Length of connecting link	240 mm 9.45“ in
L3	Length of pendant strap	3909 mm 12‘ 10“ ft-in
L4	Length of pendant strap	3020 mm 9‘ 11“ ft-in
W	Width	527 mm 1‘ 9“ ft-in
W1	Width of pendant strap	22 mm 0.87“ in
W2	Width of spacer bar	1540 mm 5‘ 1“ ft-in
W3	Width of pendant strap	15 mm 0.59“ in
W4	Width	1700 mm 5‘ 7“ ft-in
H	Height of pendant strap	55 mm 2.17“ in
H1	Height of pendant strap	62 mm 2.44“ in
H2	Height of connecting link	280 mm 11.02“ in

copyright by

Name		Value
D	Pin Ø	140 mm 5.51“ in
D1	Pin Ø	50 mm 1.97“ in
D2	Pin Ø	60 mm 2.36“ in
D2	Spacer bar Ø	90 mm 3.54“ in
Weight		191 kg 421 lb

Tab. 234: Technical data equalizer on A-frame2 (jib backstay strap)

CF pendant straps on A-frame3

A-frame3 equalizer (jib pendant strap)

Installation site in crane mode:
- Luffing jib 1916 (For more information see: Pendant straps A-frame3 to jib head 1916, page 1597)
- Luffing jib 1916 + midfall 1916 (For more information see: Pendant straps A-frame3 to jib head 1916, page 1688)

Generation A of A-frame3 equalizer (jib pendant strap)

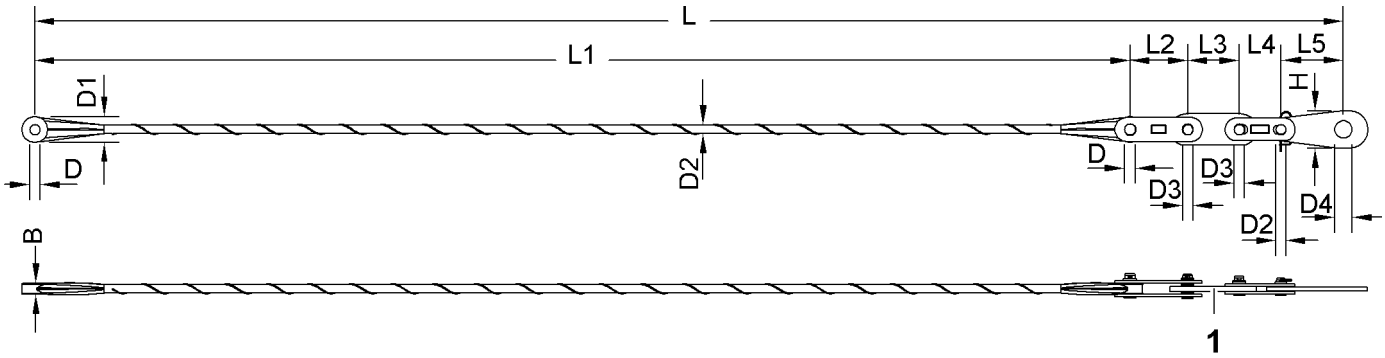

Fig. 382: Dimensions equalizer on A-frame3 (jib pendant strap)

1 Tension load cell

Name		Value
L	Length	7550 mm 24‘ 9“ ft-in
L1	Length of pendant strap	6320 mm 20‘ 9“ ft-in
L2	Length of connecting link	332 mm 1‘ 1“ ft-in
L3	Length of tension load cell	298 mm 1‘ ft-in

LWN/LR.x/V03.01//Auslieferung/2015-06-03/en

copyright by
LIEBHERR

Name		Value
L4	Length of connecting link	240 mm 9.45“ in
L5	Length of connecting link	360 mm 1‘ 2“ ft-in
W	Width	64 mm 2.52“ in
H	Height of connecting link	216 mm 8.50“ in
D	Pin Ø	60 mm 2.36“ in
D1	Pendant strap Ø	148 mm 5.83“ in
D2	Pendant strap Ø	50 mm 1.97“ in
D3	Pin Ø	55 mm 2.17“ in
D4	Pin Ø	100 mm 3.94“ in
Weight		205 kg 452 lb

Tab. 235: Technical data A-frame3 equalizer (jib pendant strap)

Generation B of A-frame3 equalizer (jib pendant strap)

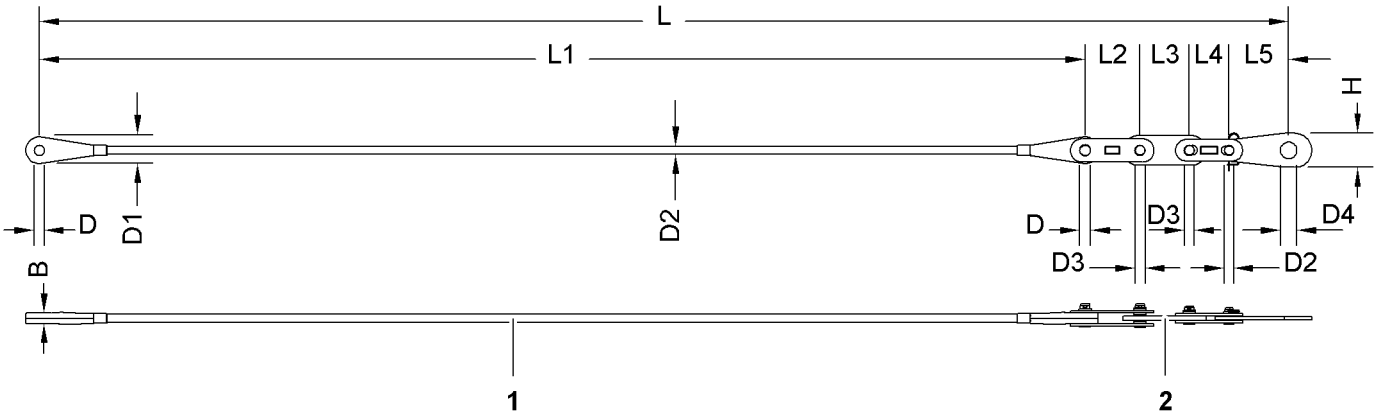

Fig. 383: Dimensions equalizer on A-frame3 (jib pendant strap)

1 Wire mesh hose as protective sheath

2 Tension load cell

Name		Value
L	Length	7550 mm 24‘ 9“ ft-in
L1	Length of pendant strap	6320 mm 20‘ 9“ ft-in

LWN/LR.x/V03.01//Auslieferung/2015-06-03/en

copyright by
LIEBHERR

Name		Value
L2	Length of connecting link	332 mm 1‘ 1“ ft-in
L3	Length of tension load cell	298 mm 1‘ ft-in
L4	Length of connecting link	240 mm 9.45“ in
L5	Length of connecting link	360 mm 1‘ 2“ ft-in
B	Width	63 mm 2.48“ in
H	Height of connecting link	216 mm 8.50“ in
D	Pin Ø	60 mm 2.36“ in
D1	Pendant strap Ø	161 mm 6.34“ in
D2	Pendant strap Ø	48 mm 1.89“ in
D3	Pin Ø	55 mm 2.17“ in
D4	Pin Ø	100 mm 3.94“ in
Weight		125 kg 276 lb

Tab. 236: Technical data A-frame3 equalizer (jib pendant strap)

CF pendant straps on jib section 1916.18 3 m (10 ft)

Jib pendant strap 3 m (10 ft)

Installation site in crane operation:
- Luffing jib 1916 (For more information see: Pendant straps A-frame3 to jib head 1916, page 1597)
- Luffing jib 1916 + midfall 1916 (For more information see: Pendant straps A-frame3 to jib head 1916, page 1688)

LWN/LR.x/V03.01//Auslieferung/2015-06-03/en

copyright by
LIEBHERR

Generation A of jib pendant strap 3 m (10 ft)

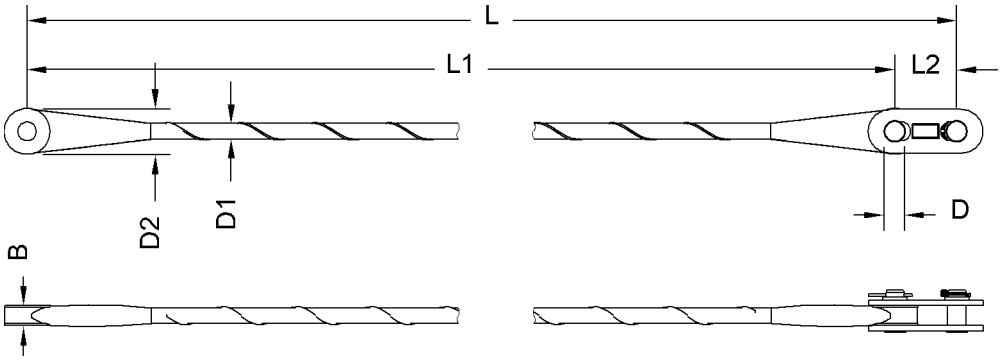

Fig. 384: Dimensions jib pendant strap 3 m (10 ft)

Name		Value
L	Length	3000 mm 9‘ 10“ ft-in
L1	Length of pendant strap	2800 mm 9‘ 2“ ft-in
L2	Length of connecting link	200 mm 7.87“ in
B	Width	64 mm 2.52“ in
D	Pin Ø	60 mm 2.36“ in
D1	Pendant strap Ø	50 mm 1.97“ in
D2	Pendant strap Ø	148 mm 5.83“ in
Weight		35 kg 77.16 lb

Tab. 237: Technical data jib pendant strap 3 m (10 ft)

Generation B of jib pendant strap 3 m (10 ft)

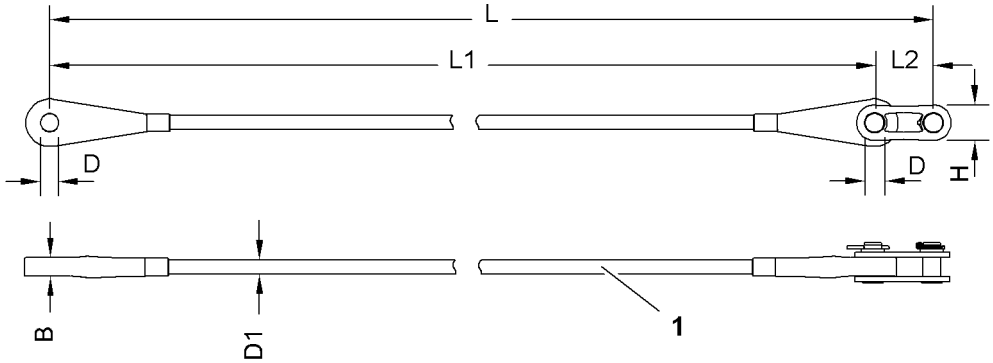

Fig. 385: Dimensions jib pendant strap 3 m (10 ft)

1 Wire mesh hose as protective sheath

LWN/LR.x/V03.01//Auslieferung/2015-06-03/en

copyright by
LIEBHERR

Name		Value
L	Length	3000 mm 9‘ 10“ ft-in
L1	Length of pendant strap	2800 mm 9‘ 2“ ft-in
L2	Length of connecting link	200 mm 7.87“ in
B	Width	63 mm 2.48“ in
H	Height of connecting link	121 mm 4.76“ in
D	Pin Ø	60 mm 2.36“ in
D1	Pendant strap Ø	48 mm 1.89“ in
Weight		26 kg 57.32 lb

Tab. 238: Technical data jib pendant strap 3 m (10 ft)

CF pendant straps on jib section 1916.18 6 m (20 ft)

Jib pendant strap 6 m (20 ft)

Installation site in crane mode:
- Luffing jib 1916 (For more information see: Pendant straps A-frame3 to jib head 1916, page 1597)
- Luffing jib 1916 + midfall 1916 (For more information see: Pendant straps A-frame3 to jib head 1916, page 1688)

Generation A of jib pendant strap 6 m (20 ft)

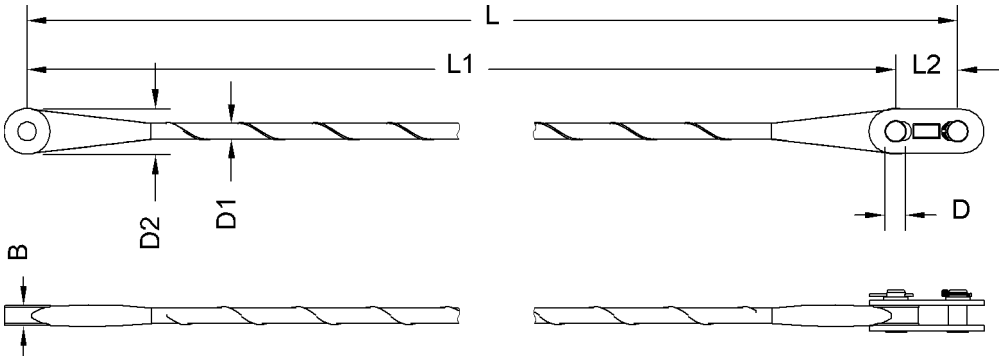

Fig. 386: Dimensions jib pendant strap 6 m (20 ft)

Name		Value
L	Length	6000 mm 19‘ 8“ ft-in
L1	Length of pendant strap	5800 mm 19‘ ft-in

LWN/LR.x/V03.01/Auslieferung/2015-06-03/en

Name		Value
L2	Length of connecting link	200 mm 7.87“ in
B	Width	64 mm 2.52“ in
D	Pin Ø	60 mm 2.36“ in
D1	Pendant strap Ø	50 mm 1.97“ in
D2	Pendant strap Ø	148 mm 5.83“ in
Weight		43 kg 94.80 lb

Tab. 239: Technical data jib pendant strap 6 m (20 ft)

Generation B of jib pendant strap 6 m (20 ft)

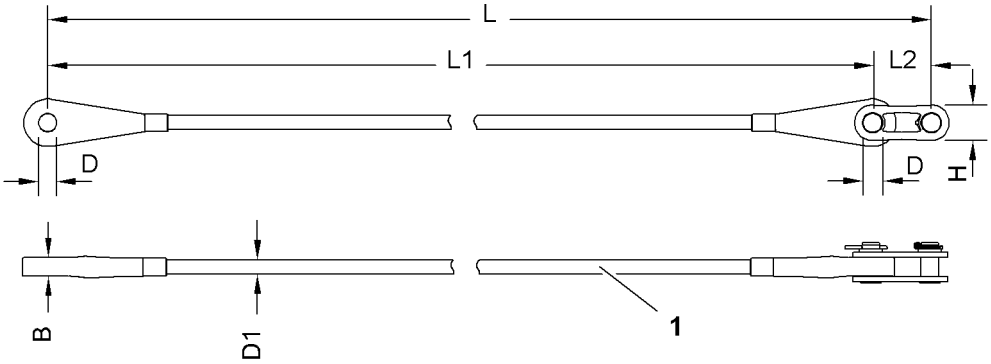

Fig. 387: Dimensions jib pendant strap 6 m (20 ft)

1 Wire mesh hose as protective sheath

Name		Value
L	Length	6000 mm 19‘ 8“ ft-in
L1	Length of pendant strap	5800 mm 19‘ ft-in
L2	Length of connecting link	200 mm 7.87“ in
B	Width	63 mm 2.48“ in
H	Height of connecting link	121 mm 4.76“ in
D	Pin Ø	60 mm 2.36“ in
D1	Pendant strap Ø	48 mm 1.89“ in

LWN/LR.x/V03.01//Auslieferung/2015-06-03/en

copyright by
LIEBHERR

Name	Value
Weight	32 kg 70.55 lb

Tab. 240: Technical data jib pendant strap 6 m (20 ft)

CF pendant straps on jib section 1916.18 12 m (40 ft)

Jib pendant strap 12 m (40 ft)

Installation site in crane mode:
- Luffing jib 1916 (For more information see: Pendant straps A-frame3 to jib head 1916, page 1597)
- Luffing jib 1916 + midfall 1916 (For more information see: Pendant straps A-frame3 to jib head 1916, page 1688)

Generation A of jib pendant strap 12 m (40 ft)

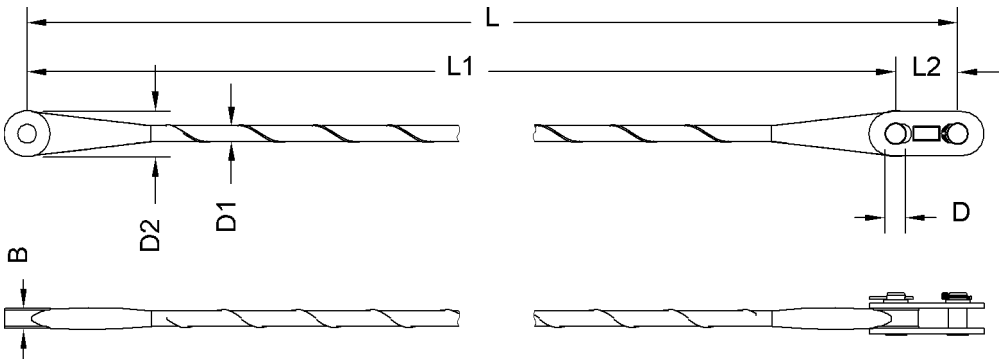

Fig. 388: Dimensions jib pendant strap 12 m (40 ft)

Name		Value
L	Length	12000 mm 39‘ 4“ ft-in
L1	Length of pendant strap	11800 mm 38‘ 9“ ft-in
L2	Length of connecting link	200 mm 7.87“ in
B	Width	64 mm 2.52“ in
D	Pin Ø	60 mm 2.36“ in
D1	Pendant strap Ø	50 mm 1.97“ in
D2	Pendant strap Ø	148 mm 5.83“ in
Weight		60 kg 132 lb

Tab. 241: Technical data jib pendant strap 12 m (40 ft)

LWN/LR.x/V03.01//Auslieferung/2015-06-03/en

copyright by
LIEBHERR

Generation B of jib pendant strap 12 m (40 ft)

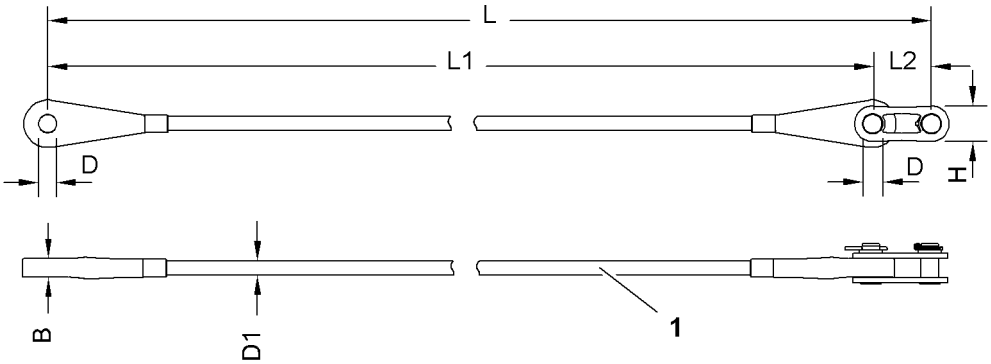

Fig. 389: Dimensions jib pendant strap 12 m (40 ft)

1 Wire mesh hose as protective sheath

Name		Value
L	Length	12000 mm 39‘ 4“ ft-in
L1	Length of pendant strap	11800 mm 38‘ 9“ ft-in
L2	Length of connecting link	200 mm 7.87“ in
B	Width	63 mm 2.48“ in
H	Height of connecting link	121 mm 4.76“ in
D	Pin Ø	60 mm 2.36“ in
D1	Pendant strap Ø	48 mm 1.89“ in
Weight		43 kg 94.80 lb

Tab. 242: Technical data jib pendant strap 12 m (40 ft)

CF pendant straps on jib head 1916.21

Jib pendant strap on jib head 1916.21

Installation site in crane operation:
- Luffing jib 1916 (For more information see: Pendant straps A-frame3 to jib head 1916, page 1597)
- Luffing jib 1916 + midfall 1916 (For more information see: Pendant straps A-frame3 to jib head 1916, page 1688)

LWN/LR.x/V03.01//Auslieferung/2015-06-03/en

copyright by LIEBHERR

Generation A of jib pendant strap on jib head 1916.21

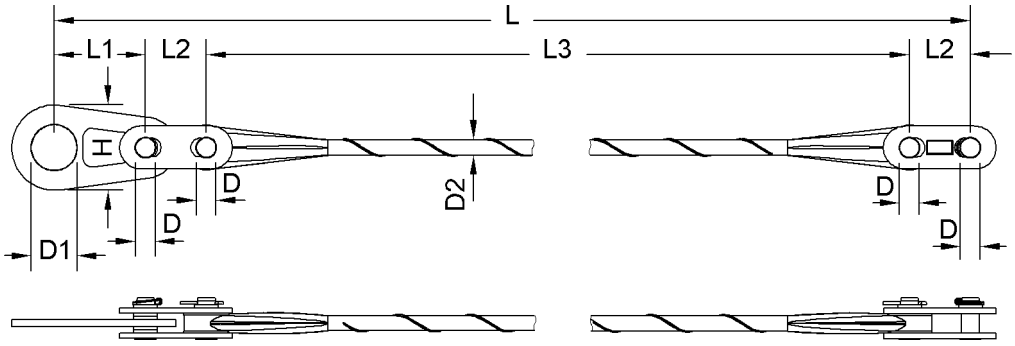

Fig. 390: Dimensions jib pendant strap on jib head 1916.21

Name		Value
L	Length	6500 mm 21‘ 4“ ft-in
L1	Length of connecting link	300 mm 1‘ ft-in
L2	Length of connecting link	200 mm 7.87“ in
L3	Length of pendant strap	5800 mm 19‘ ft-in
H	Height of connecting link	280 mm 11.02“ in
D	Pin Ø	60 mm 2.36“ in
D1	Pin Ø	150 mm 5.91“ in
D2	Pendant strap Ø	50 mm 1.97“ in
Weight		69 kg 152 lb

Tab. 243: Technical data jib pendant strap on jib head 1916.21

LWN/LR.x/V03.01//Auslieferung/2015-06-03/en

copyright by
LIEBHERR

Generation B of jib pendant strap on jib head 1916.21

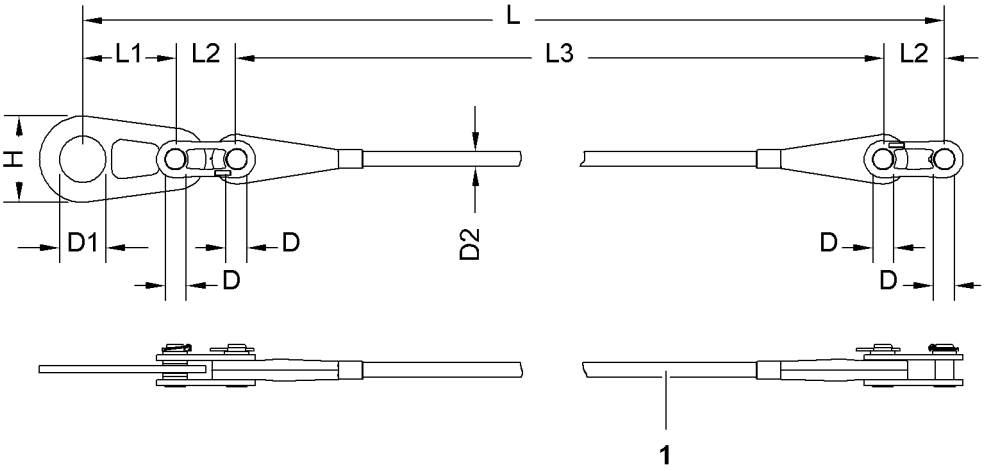

Fig. 391: Dimensions jib pendant strap on jib head 1916.21

1 Wire mesh hose as protective sheath

Name		Value
L	Length	6500 mm 21‘ 4“ ft-in
L1	Length of connecting link	300 mm 1‘ ft-in
L2	Length of connecting link	200 mm 7.87“ in
L3	Length of pendant strap	5800 mm 19‘ ft-in
H	Height of connecting link	280 mm 11.02“ in
D	Pin Ø	60 mm 2.36“ in
D1	Pin Ø	150 mm 5.91“ in
D2	Pendant strap Ø	48 mm 1.89“ in
Weight		69 kg 152 lb

Tab. 244: Technical data jib pendant strap on jib head 1916.21

LWN/LR.x/V03.01//Auslieferung/2015-06-03/en

copyright by
LIEBHERR

1.22 Midfall overview

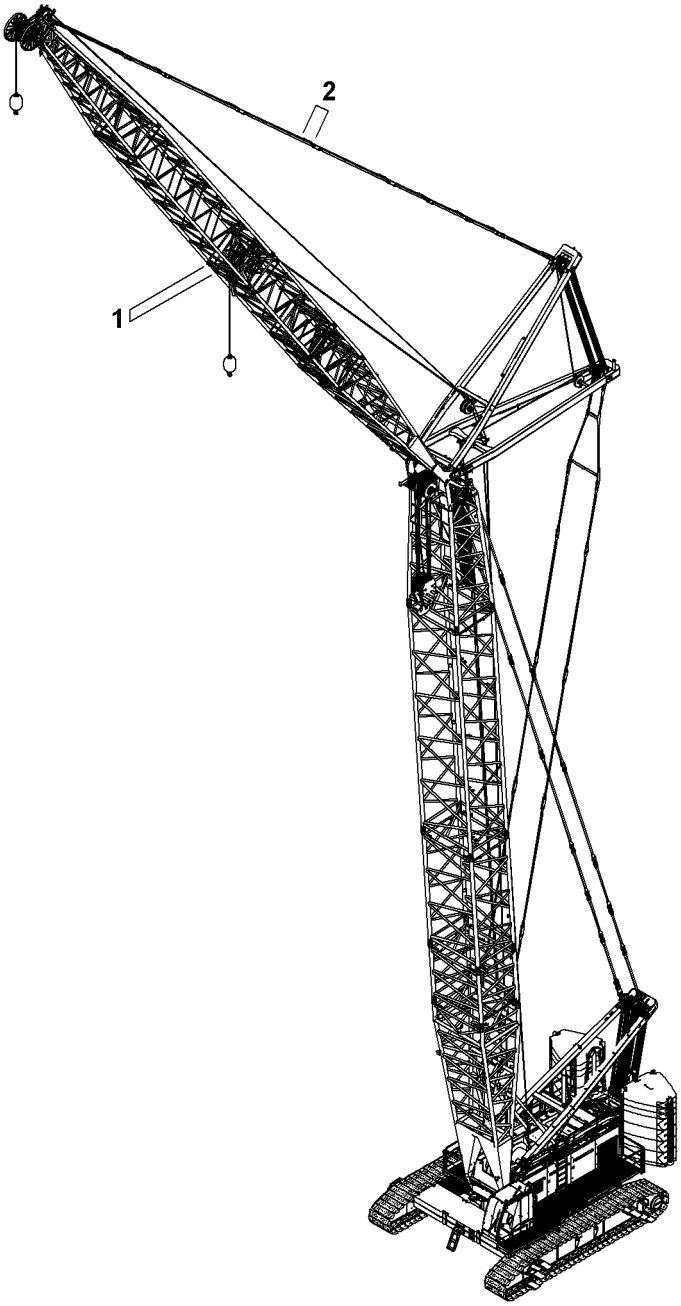

Fig. 392: Midfall overview

1 Midfall **2** Midfall connecting link

The Midfall connecting link **2** replaces the first connecting link of the first jib pendant strap 12 m (40 ft) beyond the Midfall assembly position.

LWN/LR.x/V03.01//Auslieferung/2015-06-03/en

copyright by
LIEBHERR

1.23 2316.25 Midfall

1.23.1 Midfall 2316.25

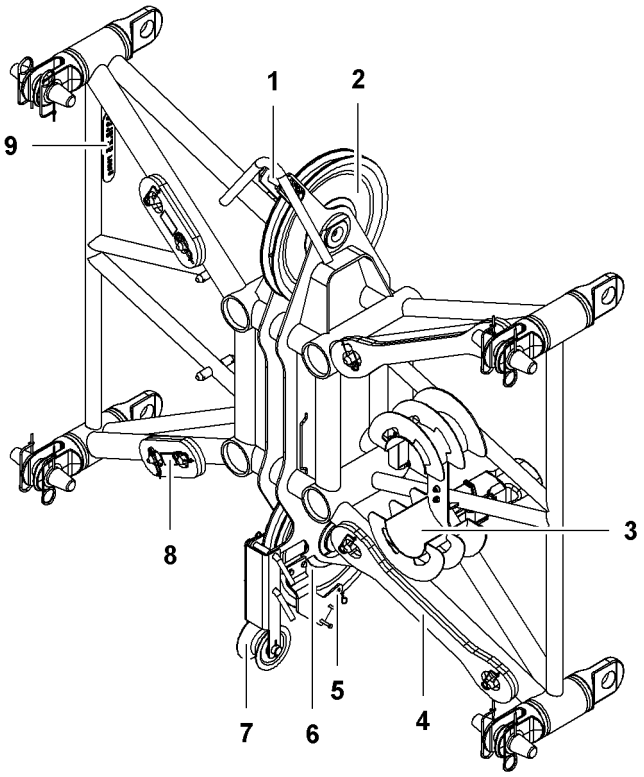

Fig. 393: Midfall 2316.25

1 Rope protection pipe
2 Top pulley
3 Cable bracket
4 Transport position of connecting links 920 mm (3‘ ft-in) or of connecting links 700 mm (2‘ 4“ ft-in) (4x)
5 Hoist limit switch
6 Bottom pulley
7 Rope pulley
8 Storage position of connecting links 420 mm (1‘ 5“ ft-in) or of connecting links 200 mm (7.87“ in) (4x)
9 Boom identification plate

LWN/LR.x/V03.01//Auslieferung/2015-06-03/en

copyright by
LIEBHERR

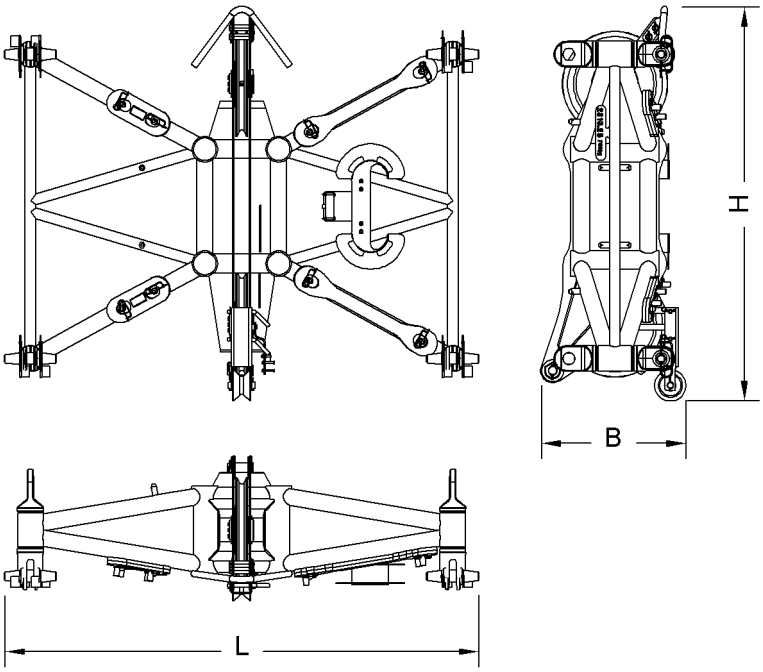

Fig. 394: Midfall 2316.25 dimensions

Name		Value
System length		500 mm 1‘ 8“ ft-in
System width		2290 mm 7‘ 6“ ft-in
System height		1650 mm 5‘ 5“ ft-in
L	Length	2600 mm 8‘ 6“ ft-in
W	Width	800 mm 2‘ 7“ ft-in
H	Height	2100 mm 6‘ 11“ ft-in
Weight (incl. connecting links)		690 kg 1,521 lb
Double-taper pins Ø		65 mm 2.56“ in

Tab. 245: Midfall 2316.25 technical data

1.23.2 Mid-point suspension on midfall 2316.25

The mid-point suspensions on midfall 2316.25 differ with steel pendant straps and CF pendant straps.

LWN/LR.x/V03.01//Auslieferung/2015-06-03/en

copyright by
LIEBHERR

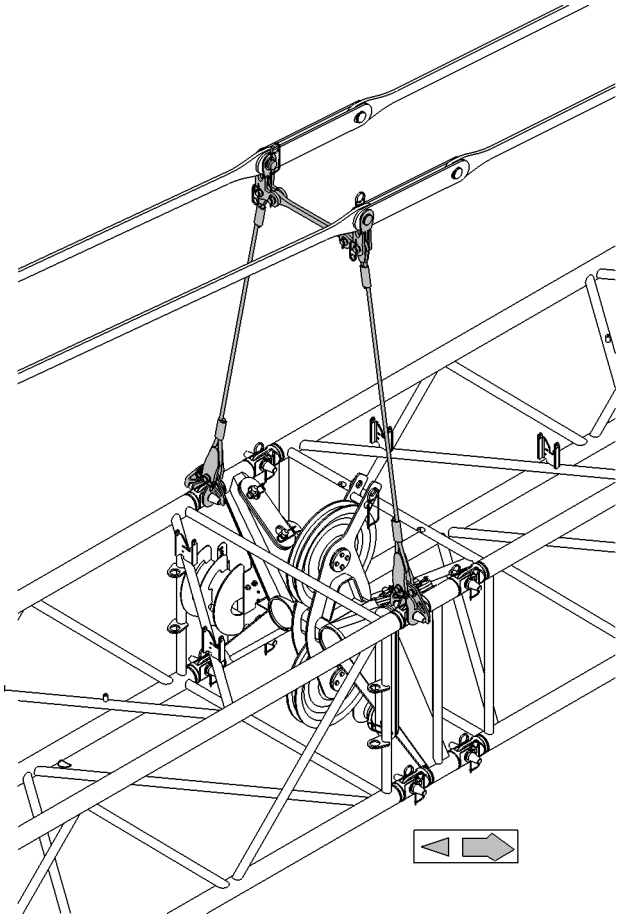

Fig. 395: Mid-point suspension on midfall 2316.25 (illustration of principle)

The mid-point suspension on midfall 2316.25 is identical with the mid-point suspension on luffing jib 2316 (For more information see: 1.20.6 Mid-point suspension on luffing jib 2316, page 294) .

1.23.3 Steel pendant straps on midfall 2316.25

Midfall connecting link

Installation site in crane operation:
– Luffing jib 2316 + midfall 2316 (For more information see: Pendant straps A-frame3 to jib head 2316, page 1673)

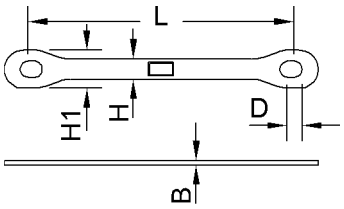

Fig. 396: Dimensions midfall connecting link

The midfall connecting link replaces the first connecting link of the first jib pendant strap 12 m (40 ft) behind the midfall installation position.

LWN/LR.x/V03.01//Auslieferung/2015-06-03/en

copyright by
LIEBHERR

Name		Value
L	Length of connecting link	920 mm 3‘ ft-in
W	Width of connecting link	15 mm 0.59“ in
H	Height of connecting link	70 mm 2.76“ in
H1	Height of connecting link	130 mm 5.12“ in
D	Pin Ø	55 mm 2.17“ in
Weight		10.1 kg 22.27 lb

Tab. 246: Technical data midfall connecting link

1.23.4 CF pendant straps on midfall 2316.25

Midfall connecting link

Installation site in crane operation:
– Luffing jib 2316 + midfall 2316 (For more information see: Pendant straps A-frame3 to jib head 2316, page 1675)

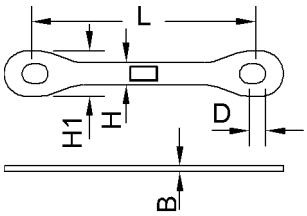

Fig. 397: Dimensions midfall connecting link

The midfall connecting link replaces the first connecting link of the first jib pendant strap 12 m (40 ft) behind the midfall installation position.

Name		Value
L	Length of connecting link	700 mm 2‘ 4“ ft-in
W	Width of connecting link	18 mm 0.71“ in
H	Height of connecting link	70 mm 2.76“ in
H1	Height of connecting link	142 mm 5.59“ in
D	Pin Ø	60 mm 2.36“ in

LWN/LR.x/V03.01//Auslieferung/2015-06-03/en

copyright by
LIEBHERR

Name	Value
Weight	2.6 kg 5.73 lb

Tab. 247: Technical data midfall connecting link

LWN/LR.x/V03.01//Auslieferung/2015-06-03/en

copyright by
LIEBHERR

1.24 1916.32 Midfall

1.24.1 Midfall 1916.32

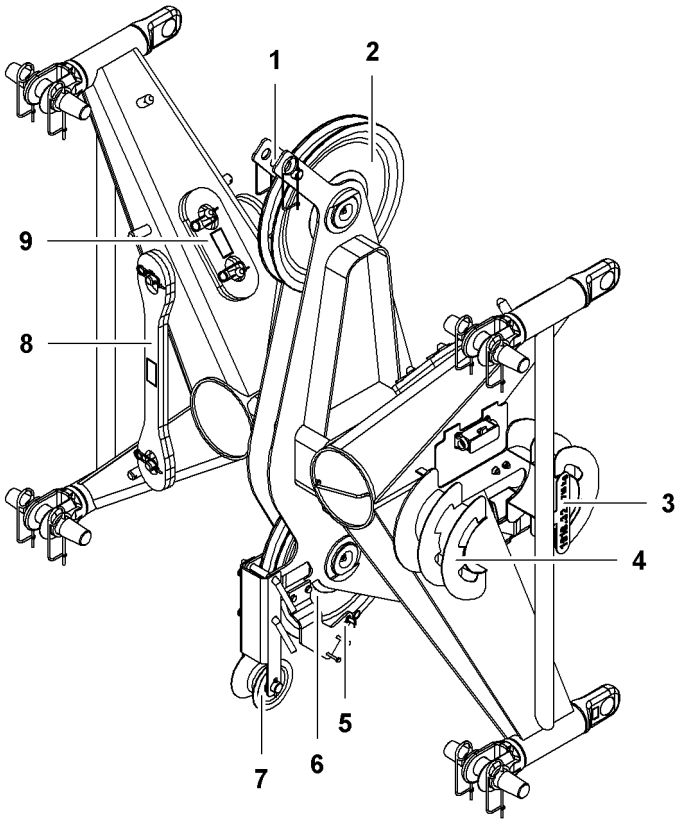

Fig. 398: 1916.32 Midfall

1	Rope protection pipe	**6**	Lower pulley
2	Upper pulley	**7**	Rope pulley
3	Boom identification plate	**8**	Transport position of connecting links 890 mm (2‘ 11“ ft-in) or of connecting links 700 mm (2‘ 4“ ft-in) (4x)
4	Wire bracket	**9**	Storage position (4x) of connecting links 390 mm (1‘ 3“ ft-in) or of connecting links 200 mm (7.87“ in)
5	Hoist limit switch		

LWN/LR.x/V03.01//Auslieferung/2015-06-03/en

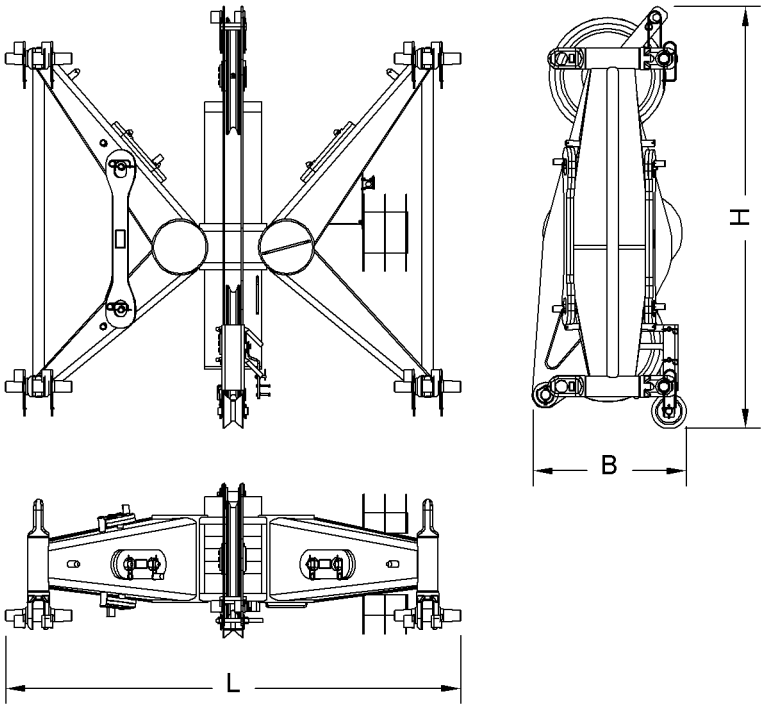

Fig. 399: Midfall 1916.32 dimensions

Name		Value
System length		500 mm 1‘ 8“ ft-in
System width		1900 mm 6‘ 3“ ft-in
System height		1600 mm 5‘ 3“ ft-in
L	Length	2000 mm 6‘ 7“ ft-in
B	Width	750 mm 2‘ 6“ ft-in
H	Height	2060 mm 6‘ 9“ ft-in
Weight (incl. connecting links)		670 kg 1,477 lb
Double-taper pins Ø		60 mm 2.36“ in

Tab. 248: Technical data 1916.32 Midfall

1.24.2 Mid-point suspension on midfall 1916.32

The mid-point suspensions on midfall 1916.32 differ with steel pendant straps and CF pendant straps.

LWN/LR.x/V03.01//Auslieferung/2015-06-03/en

copyright by
LIEBHERR

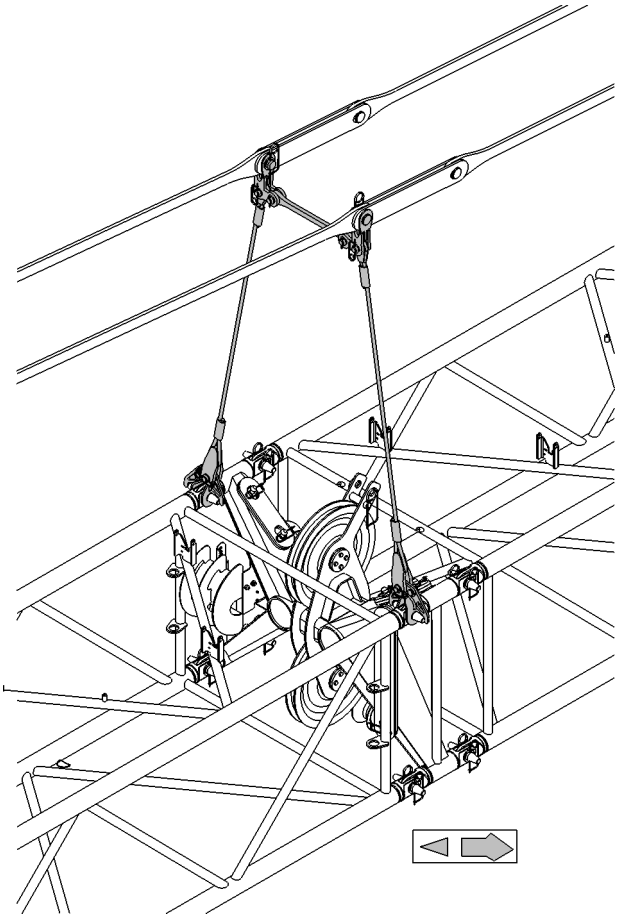

Fig. 400: Mid-point suspension on midfall 1916.32 (illustration of principle)

The mid-point suspension on midfall 1916.32 is identical with the mid-point suspension on luffing jib 1916 (For more information see: 1.21.6 Mid-point suspension on luffing jib 1916, page 333) .

1.24.3 Steel pendant straps on midfall 1916.32

Midfall connecting link

Installation site in crane operation:
– Luffing jib 1916 + midfall 1916 (For more information see: Pendant straps A-frame3 to jib head 1916, page 1686)

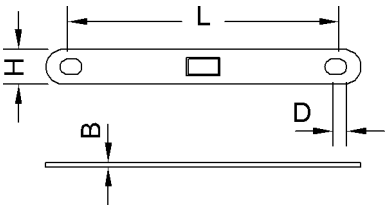

Fig. 401: Dimensions midfall connecting link

The midfall connecting link replaces the first connecting link of the first jib pendant strap 12 m (40 ft) behind the midfall installation position.

LWN/LR.x/V03.01//Auslieferung/2015-06-03/en

Name		Value
L	Length of connecting link	890 mm 2‘ 11“ ft-in
W	Width of connecting link	15 mm 0.59“ in
H	Height of connecting link	114 mm 4.49“ in
D	Pin Ø	50 mm 1.97“ in
Weight		12.8 kg 28.22 lb

Tab. 249: Technical data midfall connecting link

1.24.4 CF pendant straps on midfall 1916.32

Midfall connecting link

Installation site in crane operation:
– Luffing jib 1916 + midfall 1916 (For more information see: Pendant straps A-frame3 to jib head 1916, page 1688)

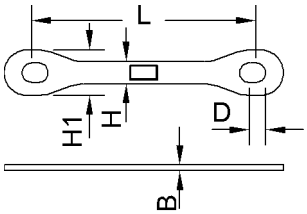

Fig. 402: Dimensions midfall connecting link

The midfall connecting link replaces the first connecting link of the first jib pendant strap 12 m (40 ft) behind the midfall installation position.

Name		Value
L	Length of connecting link	700 mm 2‘ 4“ ft-in
W	Width of connecting link	18 mm 0.71“ in
H	Height of connecting link	70 mm 2.76“ in
H1	Height of connecting link	142 mm 5.59“ in
D	Pin Ø	60 mm 2.36“ in
Weight		2.6 kg 5.73 lb

Tab. 250: Technical data midfall connecting link

LWN/LR.x/V03.01//Auslieferung/2015-06-03/en

copyright by
LIEBHERR

1.25 Auxiliary jib* (36 t (79.300 lb))

This auxiliary jib can be attached to any boom head section.

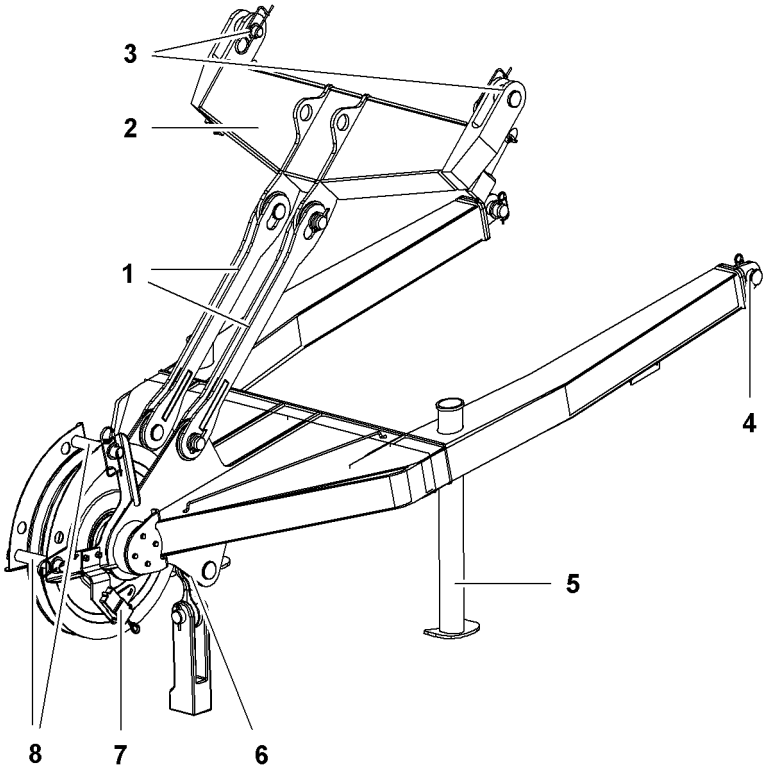

Fig. 403: Auxiliary jib (36 t (79.300 lb)) for the boom head section

1 Pendant strap (2x)
2 Crossbar
3 Top pin connection point (2x) on main boom head
4 Bottom pin connection point (2x) on main boom head
5 Support base (2x)
6 Rope fixation
7 Hoist limit switch
8 Rope protection pipe (2x)

The auxiliary jib is designed for a maximum load of 36 t (79.300 lb). A second, optional pulley (3-fold reeving) is required if the maximum lifting capacity is to be achieved.

The radius change and the weight increase of the main boom head due to the auxiliary jib are taken into account by the Load moment limiter. Due to this weight increase, it is not possible to erect the main boom to all possible heights.

Recommended values for radius enlargement using the auxiliary jib:

Machine type	Main boom angle			
	15°	20°	45°	86°
LR 1001	1380 mm 4‘ 6“ ft-in	-	1900 mm 6‘ 3“ ft-in	1760 mm 5‘ 9“ ft-in
LR 1002	1210 mm 4‘ ft-in	-	1890 mm 6‘ 2“ ft-in	2000 mm 6‘ 7“ ft-in

LWN/LR.x/V03.01//Auslieferung/2015-06-03/en

copyright by
LIEBHERR

Machine type	Main boom angle			
	15°	20°	45°	86°
LR 1003	1210 mm 4‘ ft-in	-	1890 mm 6‘ 2“ ft-in	2000 mm 6‘ 7“ ft-in
LR 1004	1210 mm 4‘ ft-in	-	1780 mm 5‘ 10“ ft-in	1800 mm 5‘ 11“ ft-in
LR 1006	-	1320 mm 4‘ 4“ ft-in	1780 mm 5‘ 10“ ft-in	1790 mm 5‘ 10“ ft-in

Tab. 251: Guideline values for radius enlargement through auxiliary jib (36 t (79.300 lb)) for main boom head

NOTICE
Incorrectly hoisted load with the 2821 main boom and an auxiliary jib attached (**L** = 1034 mm (3‘ 5“ ft-in)) and main boom angle less than 20°!
Risk of damage to the rope.

▶ Hoist a load with the main boom exclusively when the main boom angle is greater than 20°.

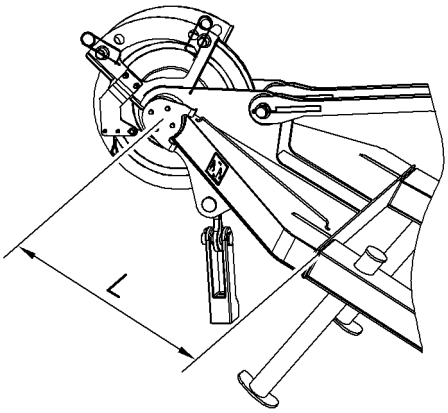

Fig. 404: Dimension L on auxiliary jib (36 t (79.300 lb))

Dimension L on auxiliary jib	Is a load allowed to be hoisted with a 2821 main boom when an auxiliary jib is fit and the main boom angle is less than 20°?
1034 mm 3‘ 5“ ft-in	NO
954 mm 3‘ 2“ ft-in	YES

Tab. 252: Dimension L on auxiliary jib (36 t (79.300 lb))

LWN/LR.x/V03.01//Auslieferung/2015-06-03/en

copyright by
LIEBHERR

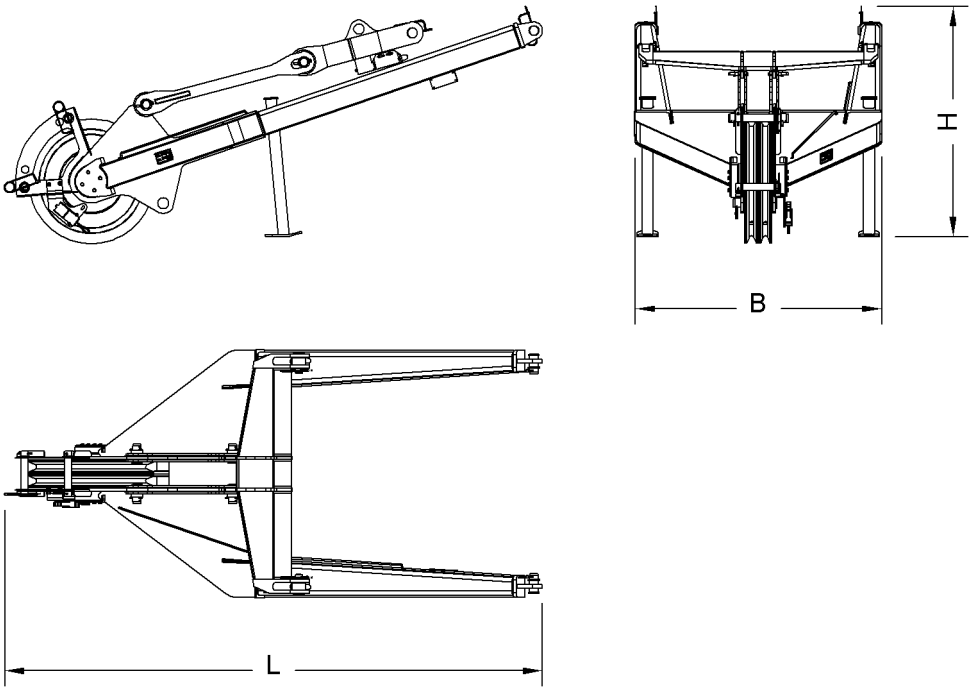

Fig. 405: Dimensions of auxiliary jib (36 t (79.300 lb)) for the boom head section

Designation		Value
L	Length	3190 mm 10‘ 6“ ft-in
B	Width	1520 mm 5‘ ft-in
H	Height	1400 mm 4‘ 7“ ft-in
Weight		590 kg 1,301 lb

Tab. 253: Technical data for auxiliary jib (36 t (79.300 lb)) for the boom head section

LWN/LR.x/V03.01//Auslieferung/2015-06-03/en

copyright by
LIEBHERR

1.26 Auxiliary jib* (30 t (66.000 lb))

This auxiliary jib can be attached to the 2316 luffing jib head section.

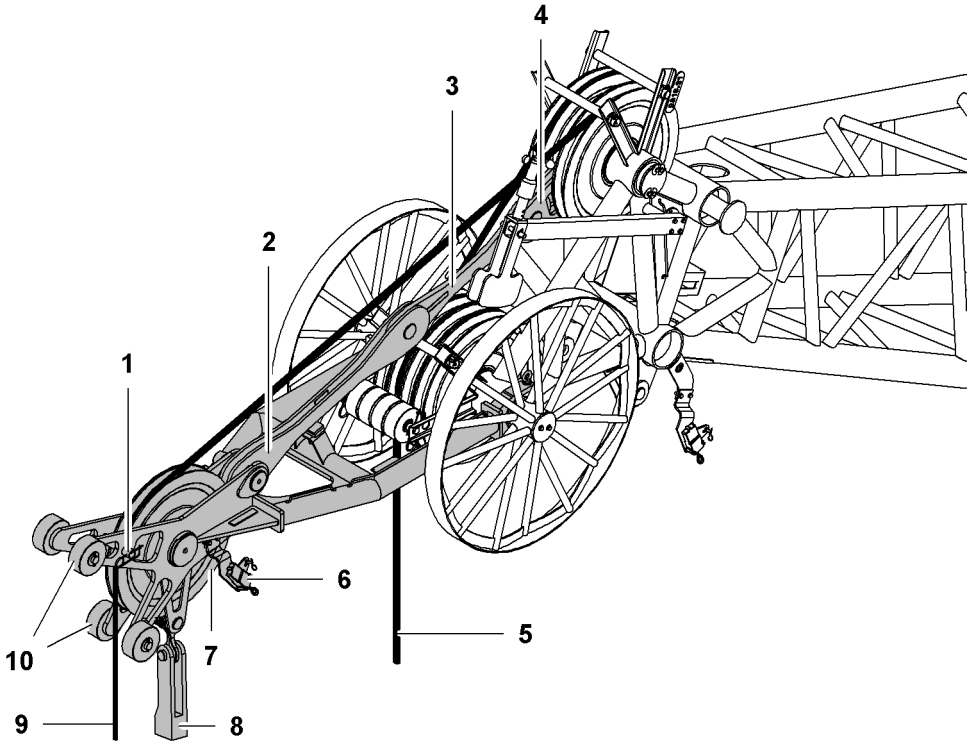

Fig. 406: Auxiliary jib (30 t (66.000 lb)) for luffing jib head 2316

1	Rope protection pipes (2x)	**6**	Hoist limit switch
2	Connecting links (2x)	**7**	Pulley
3	Pendant strap	**8**	Rope fixation
4	Connecting links (2x)	**9**	Winch 2 hoist rope
5	Winch 1 hoist rope	**10**	Running rollers (4x)

The auxiliary jib is designed with a maximum lifting capacity of 30 t (66,138 lb).

The increase in weight of the jib head section caused by the auxiliary jib has been taken into account in the Load Moment Limiter (LML).

Recommended values for radius enlargement using the auxiliary jib:

Jib angle	Radius enlargement
15° 15°	1773 mm 5‘ 10“ ft-in
45° 45°	1692 mm 5‘ 7“ ft-in
78° 78°	1083 mm 3‘ 7“ ft-in

Tab. 254: Guideline values for radius enlargement by the auxiliary jib (30 t (66.000 lb)) for luffing jib head 2316

LWN/LR.x/V03.01//Auslieferung/2015-06-03/en

copyright by
LIEBHERR

Designation		Value
L	Length	2600 mm 8‘ 6“ ft-in
B	Width	850 mm 2‘ 9“ ft-in
H	Height	750 mm 2‘ 6“ ft-in
Weight		408 kg 899 lb

Tab. 255: Technical data: auxiliary jib for 2316 luffing jib head section

LWN/LR.x/V03.01//Auslieferung/2015-06-03/en

copyright by
LIEBHERR

1.27 Auxiliary jib* (15 t (33.000 lb))

This auxiliary jib can be attached to the 1916, 1713, 1309, 1008 luffing jib head sections.

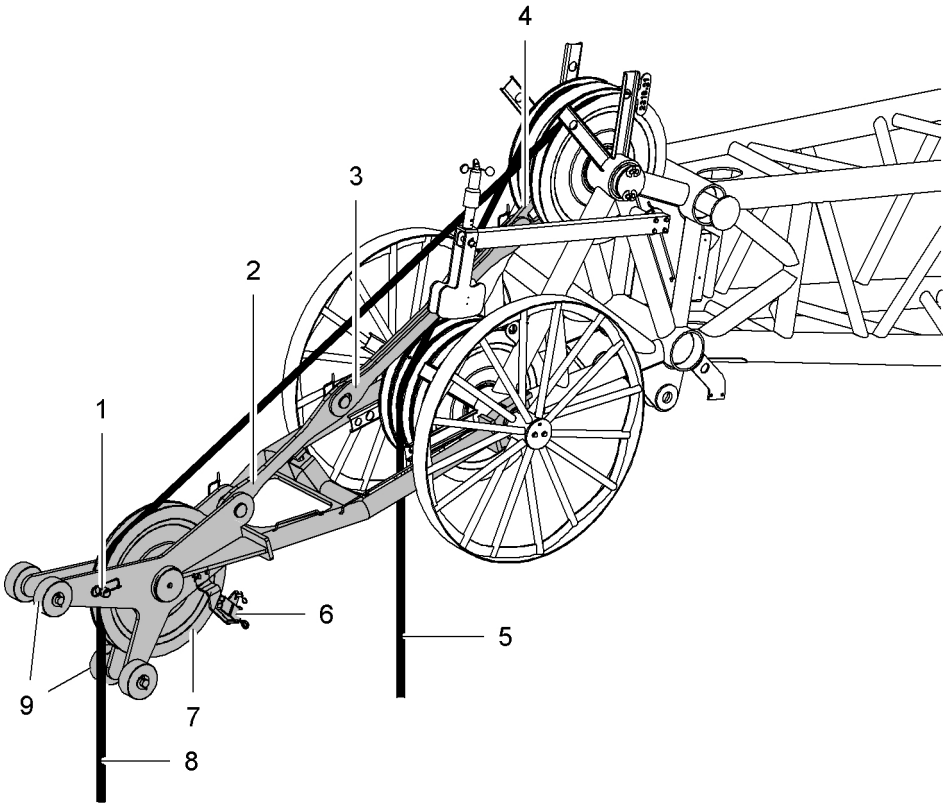

Fig. 407: Auxiliary jib (15 t (33.000 lb)) for luffing jib head 1916, 1713, 1309, 1008

1 Rope protection pipe
2 Pendant strap
3 Connecting link (2x)
4 Connecting link
5 Winch 1 rope
6 Hoist limit switch
7 Pulley
8 Winch 2 rope
9 Running roller (4x)

The auxiliary jib is designed with a maximum lifting capacity of 15 t (33,069 lb).

The increase in weight of the jib head section caused by the auxiliary jib has been taken into account in the Load Moment Limiter.

Recommended values for radius enlargement using the auxiliary jib:

Jib angle	Radius enlargement
15° 15°	1773 mm 5‘ 10“ ft-in
45° 45°	1691 mm 5‘ 7“ ft-in
78° 78°	1083 mm 3‘ 7“ ft-in

Tab. 256: Guideline values for radius enlargement by the auxiliary jib (15 t (33.000 lb)) for luffing jib head 1916, 1713, 1309, 1008

LWN/LR.x/V03.01//Auslieferung/2015-06-03/en

copyright by
LIEBHERR

Designation		Value
L	Length	2600 mm 8‘ 6“ ft-in
B	Width	720 mm 2‘ 4“ ft-in
H	Height	750 mm 2‘ 6“ ft-in
Weight		350 kg 772 lb

Tab. 257: Technical data: auxiliary jib for 1916, 1713, 1309, 1008 luffing jib head sections

LWN/LR.x/V03.01//Auslieferung/2015-06-03/en

copyright by
LIEBHERR

1.28 Derrick equipment*

1.28.1 Overview of derrick equipment

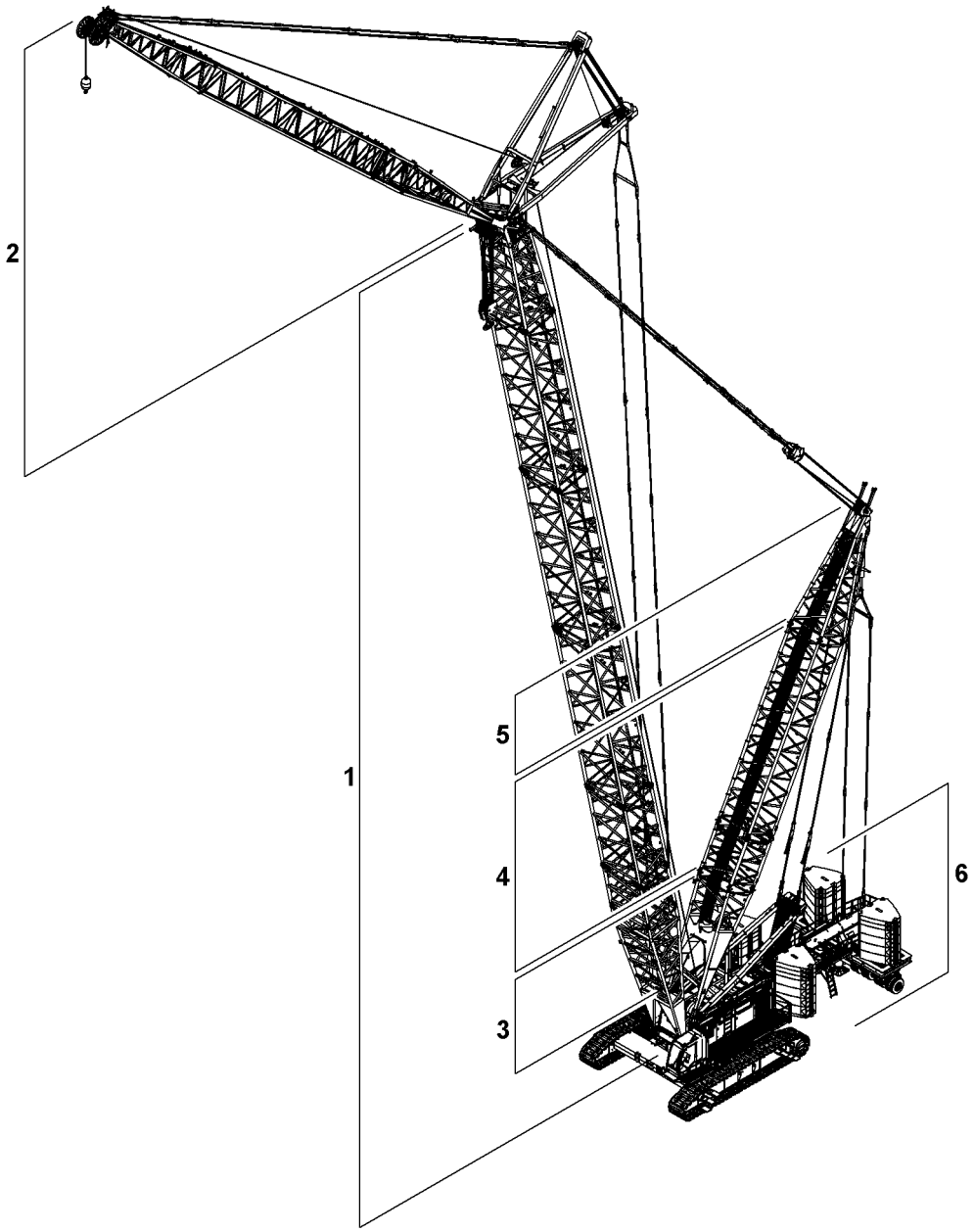

Fig. 408: Overview of derrick equipment

1	Main boom	**4**	Derrick boom sections
2	Fixed jib or luffing jib	**5**	Derrick boom head
3	Derrick boom base section	**6**	Suspended counterweight or counterweight carriage

LWN/LR.x/V03.01//Auslieferung/2015-06-03/en

copyright by
LIEBHERR

1.28.2 Derrick boom 2220

Derrick boom base section 2220.24

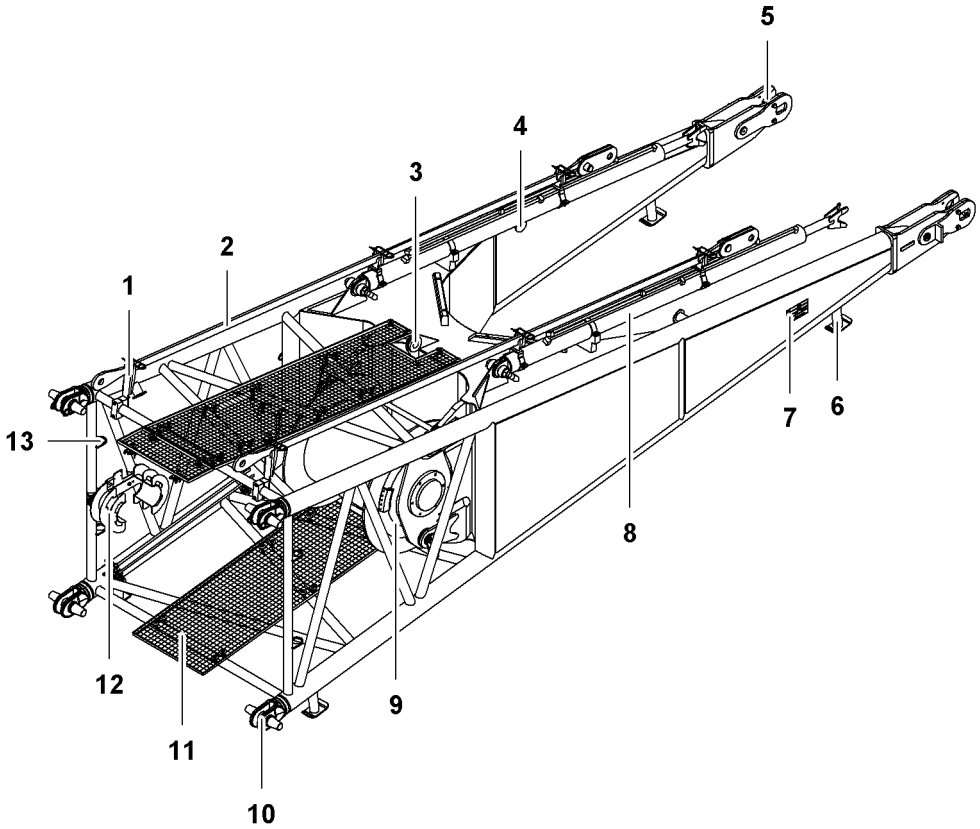

Fig. 409: Derrick boom base section 2220.24

1	Transport bracket (6x) for main boom pendant straps	**8**	Derrick tilting-back support (2x)
2	Transport position (2x) of main boom pendant straps for main boom head 2220.24 (LR 1005.xx.xx)	**9**	Derrick winch
3	Pin connection point for assembly cylinder	**10**	Pin connection point (4x) with double-taper pin (4x)
4	Rigging point (4x)	**11**	Catwalk (2x)
5	Pivot point (2x) for uppercarriage	**12**	Cable bracket for electric cable
6	Foot (4x)	**13**	Transport bracket (4x) for double taper pin
7	Derrick type plate		

LWN/LR.x/V03.01//Auslieferung/2015-06-03/en

copyright by
LIEBHERR

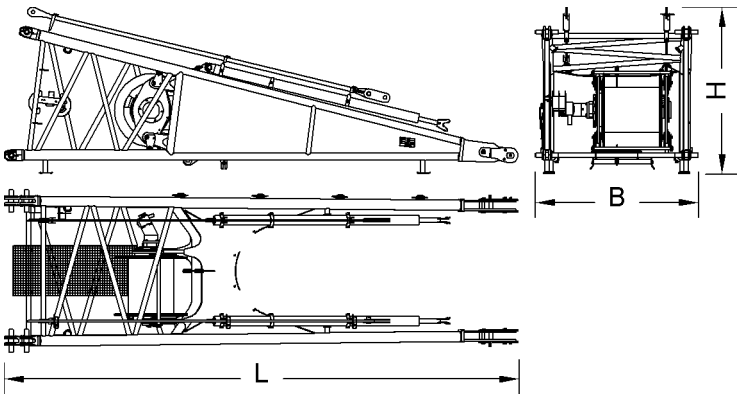

Fig. 410: Dimensions of derrick boom base section 2220.24

Name		Value
System length		8000 mm 26‘ 3“ ft-in
System width		2250 mm 7‘ 5“ ft-in
System height		2000 mm 6‘ 7“ ft-in
L	Length	8290 mm 27‘ 2“ ft-in
B	Width	2450 mm 8‘ ft-in
H	Height (incl. pendant straps)	2680 mm 8‘ 10“ ft-in
Weight (incl. derrick tilting-back supports, derrick pendant straps, derrick winch, rope of derrick winch)		8100 kg 17,857 lb
Double taper pin Ø		80 mm 3.15“ in

Tab. 258: Technical data derrick boom base section 2220.24

LWN/LR.x/V03.01//Auslieferung/2015-06-03/en

copyright by
LIEBHERR

Derrick boom section 2220.24 3 m (10 ft)

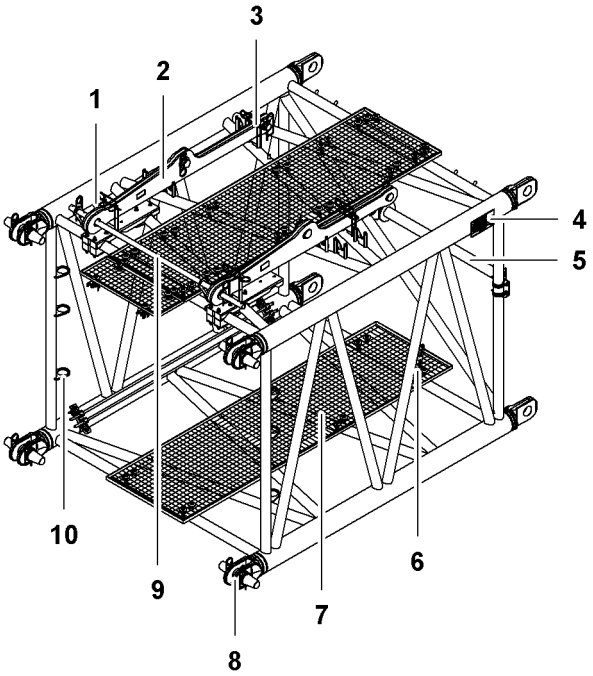

Fig. 411: Derrick boom section 2220.24 3 m (10 ft)

1	Rigging point (4x)	**6**	Boom identification plate
2	Transport position (2x) of adapter connecting links	**7**	Catwalk (2x)
3	Transport bracket (4x) for adapter connecting links	**8**	Pin connection point (8x) with double-taper pin (4x)
4	Derrick type plate	**9**	Transport bracket for adapter connecting links
5	Rope protection roller	**10**	Transport bracket (4x) for double taper pin

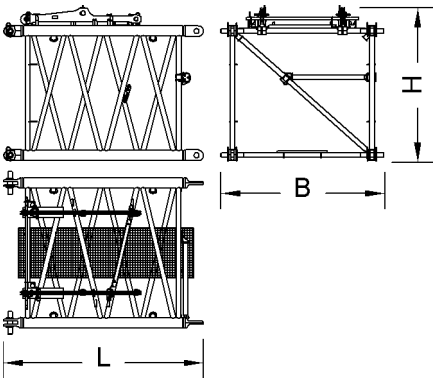

Fig. 412: Dimensions of derrick boom section 2220.24 3 m (10 ft)

Name	Value
System length	3000 mm 9‘ 10“ ft-in

LWN/LR.x/V03.01//Auslieferung/2015-06-03/en

Name		Value
System width		2250 mm 7‘ 5“ ft-in
System height		2000 mm 6‘ 7“ ft-in
L	Length	3220 mm 10‘ 7“ ft-in
B	Width	2420 mm 7‘ 11“ ft-in
H	Height (incl. connecting link adapters)	2460 mm 8‘ 1“ ft-in
Weight (incl. connecting link adapters)		1100 kg 2,425 lb
Double taper pin Ø		80 mm 3.15“ in

Tab. 259: Technical data derrick boom section 2220.24 3 m (10 ft)

LWN/LR.x/V03.01//Auslieferung/2015-06-03/en

copyright by
LIEBHERR

Derrick boom section 2220.22 11.7 m (38 ft)

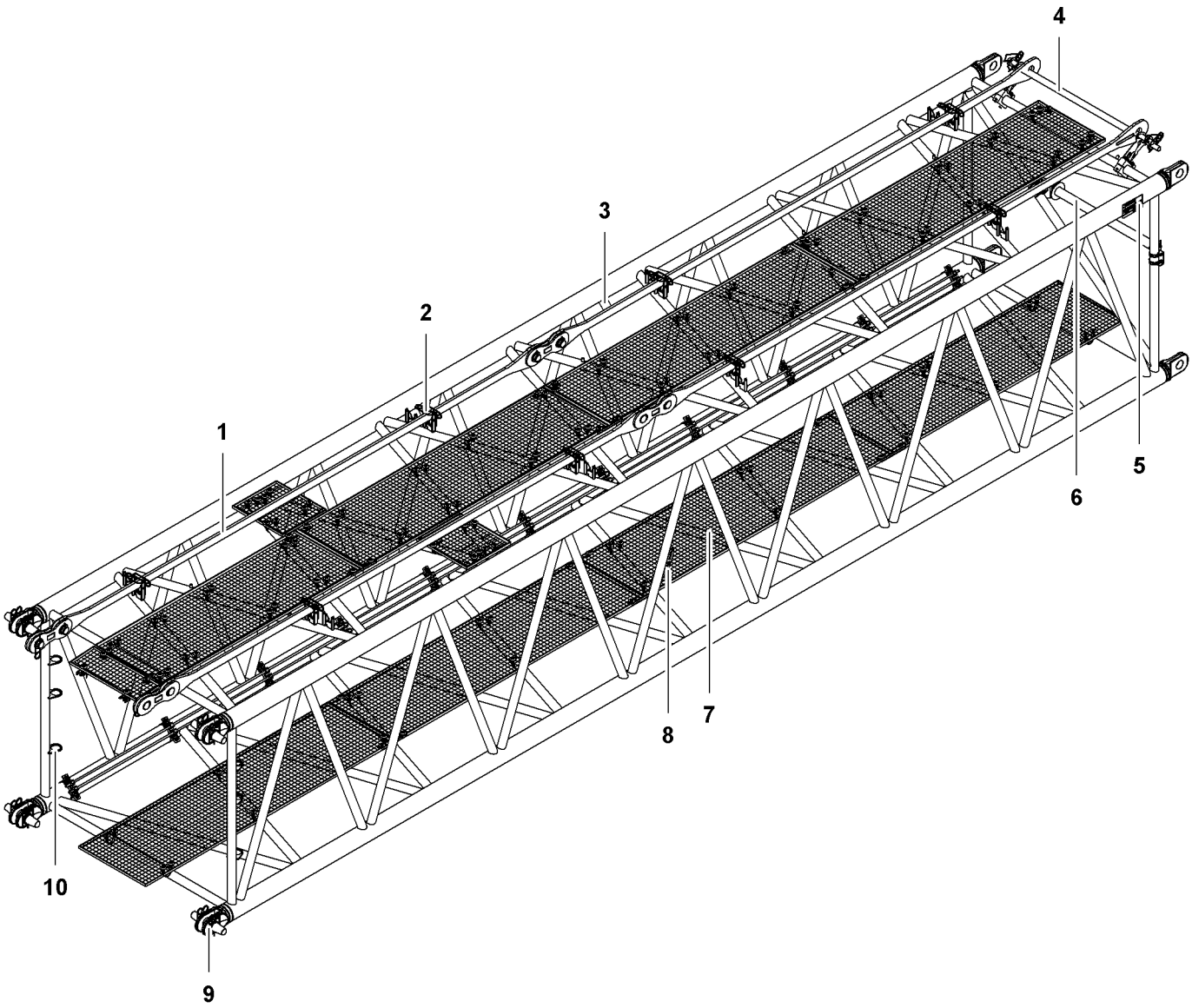

Fig. 413: Derrick boom section 2220.22 11.7 m (38 ft)

1 Transport position (2x) of derrick boom pendant straps 12 m (40 ft)
2 Transport bracket (8x) for derrick boom pendant straps 12 m (40 ft)
3 Rigging point (4x)
4 Transport bracket derrick boom pendant straps
5 Derrick type plate
6 Rope protection roller
7 Catwalk (8x)
8 Boom identification plate
9 Pin connection point (8x) with double-taper pin (4x)
10 Transport bracket (4x) for double taper pin

LWN/LR.x/V03.01//Auslieferung/2015-06-03/en

copyright by
LIEBHERR

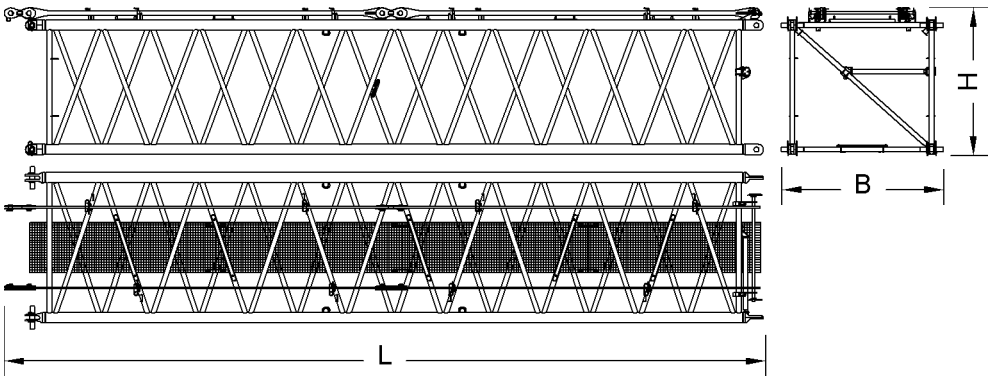

Fig. 414: Dimensions of derrick boom section 2220.22 11.7 m (38 ft)

Name		Value
System length		11700 mm 38‘ 5“ ft-in
System width		2250 mm 7‘ 5“ ft-in
System height		2000 mm 6‘ 7“ ft-in
L	Length	11920 mm 39‘ 1“ ft-in
B	Width	2420 mm 7‘ 11“ ft-in
H	Height (incl. pendant straps)	2370 mm 7‘ 9“ ft-in
Weight (incl. pendant straps)		3604 kg 7,945 lb
Double taper pin Ø		80 mm 3.15“ in

Tab. 260: Technical data derrick boom section 2220.22 11.7 m (38 ft)

LWN/LR.x/V03.01//Auslieferung/2015-06-03/en

copyright by
LIEBHERR

Derrick boom head 2220.22

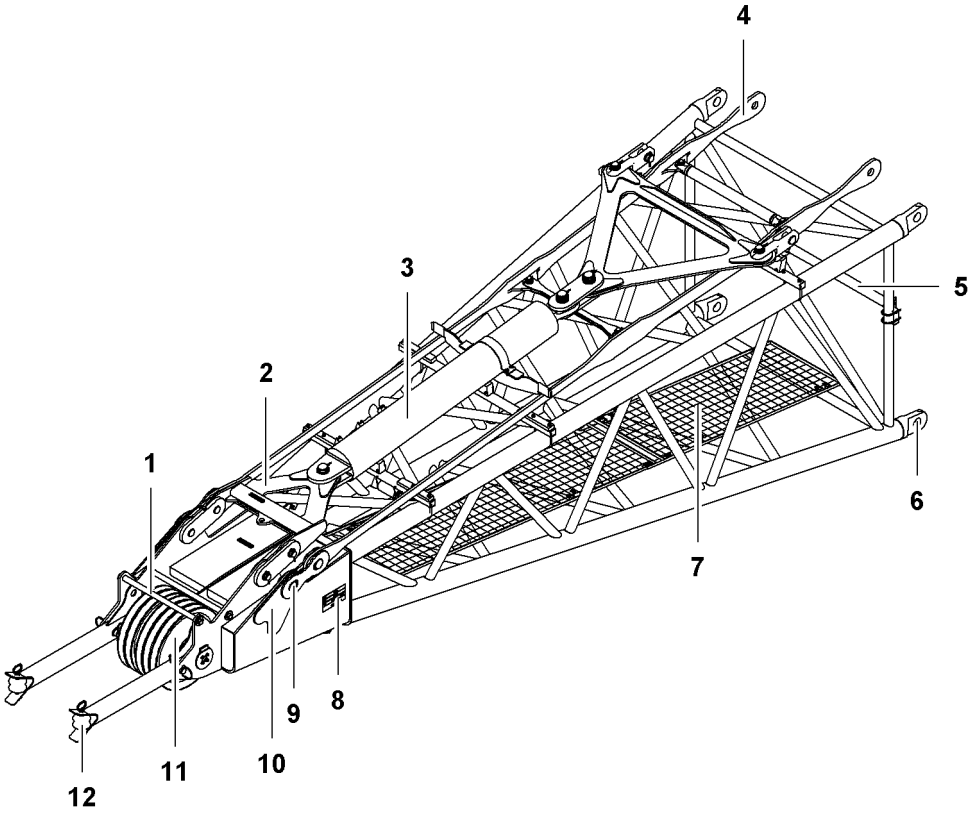

Fig. 415: Derrick boom head 2220.22

1	Rope protection pipe (2x)	**7**	Catwalk (2x)
2	Crossbar for derrick hoist cylinder	**8**	Derrick type plate
3	Derrick hoist cylinder	**9**	Crossbar pin connection (2x) with derrick boom head
4	Crossbar with connecting link	**10**	Reinforcement (4x) on the derrick boom head
5	Rope protection roller	**11**	Pulley (5x)
6	Pin connection point (4x)	**12**	Transport bracket (2x) for derrick rope rigging

The crossbar **2** for the derrick hoist cylinder **3** is bolted onto a side of the derrick boom head with tension load cells.

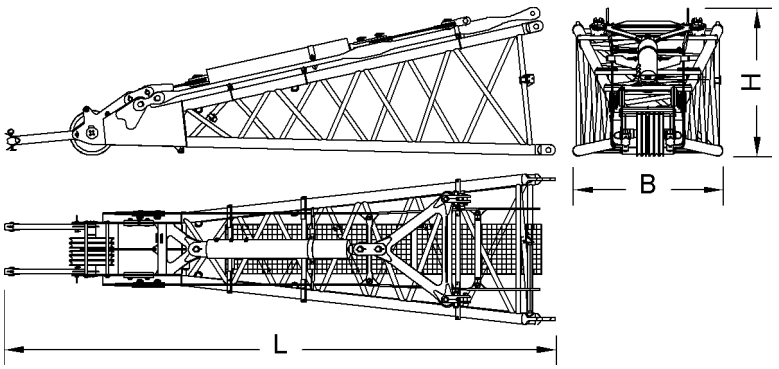

Fig. 416: Dimensions of the derrick boom head 2220.22

LWN/LR.x/V03.01//Auslieferung/2015-06-03/en

Name		Value
System length		7300 mm 23‘ 11“ ft-in
System width		2250 mm 7‘ 5“ ft-in
System height		2000 mm 6‘ 7“ ft-in
L	Length	8880 mm 29‘ 2“ ft-in
B	Width	2420 mm 7‘ 11“ ft-in
H	Height (incl. pendant straps)	2380 mm 7‘ 10“ ft-in
Weight (incl. pendant straps, crossbars, derrick hoist cylinder)		4490 kg 9,899 lb

Tab. 261: Technical data derrick boom head 2220.22

Derrick rope rigging with crossbar

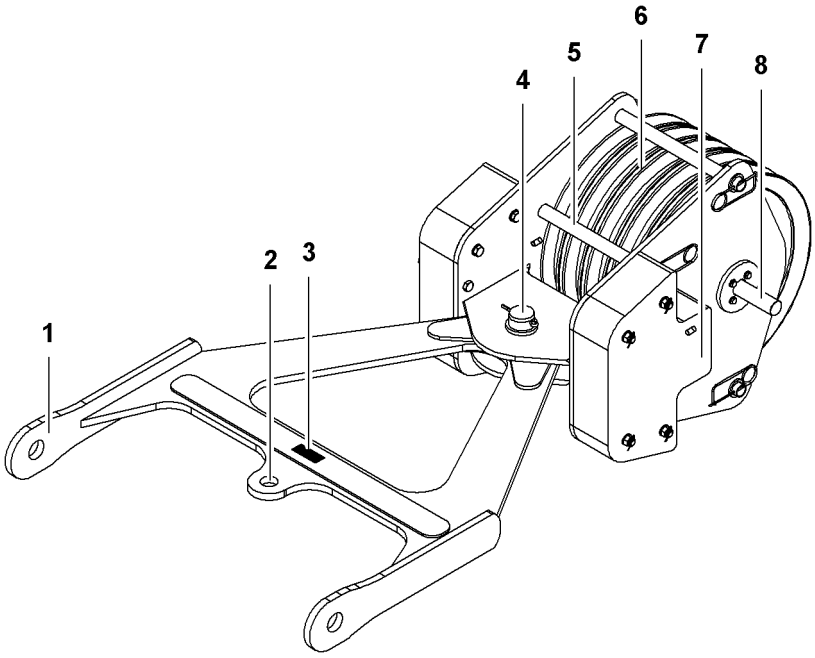

Fig. 417: Derrick rope rigging with crossbar

1	Crossbar	**5**	Rope protection pipe (4x)
2	Pivot point (max. 16 t (35,273 lb)) for hoist work during assembly	**6**	Pulley (5x)
3	Type designation LR 1300	**7**	Counterweight weight (2x)
4	Pin Ø80 mm (3.15“ in)	**8**	Axis

For assembly work with the derrick rope rigging, a shackle or a swivel is attached to the pivot point **2** on the crossbar **1**.

For transport, the derrick rope rigging with the axis **8** is attached on both sides on the transport bracket on the derrick boom head.

LWN/LR.x/V03.01//Auslieferung/2015-06-03/en

copyright by
LIEBHERR

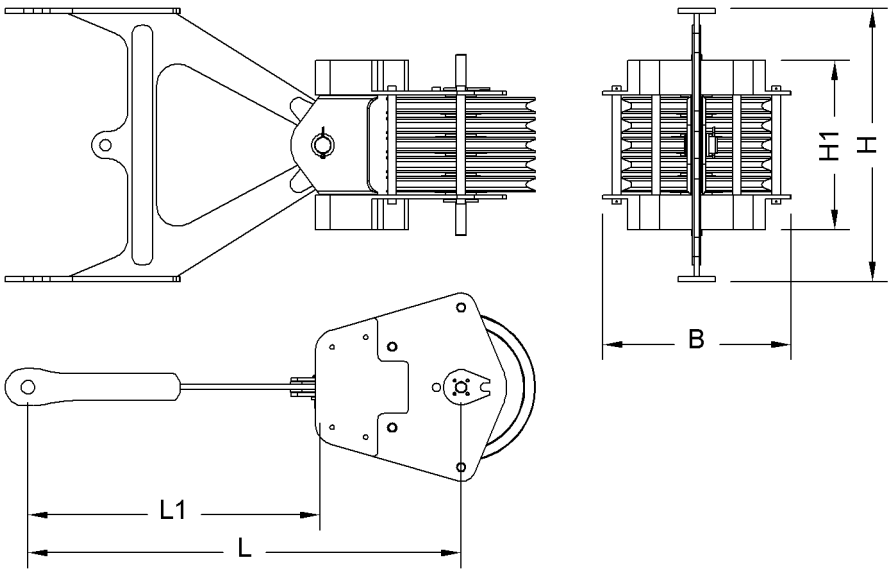

Fig. 418: Dimensions derrick rope rigging with crossbar

Name		Value
L	Length	2145 mm 7‘ ft-in
L1	Length of crossbar	1475 mm 4‘ 10“ ft-in
B	Width of derrick rope rigging	914 mm 3‘ ft-in
H	Height of crossbar	1300 mm 4‘ 3“ ft-in
H1	Height of derrick rope rigging	821 mm 2‘ 8“ ft-in
Pulleys Ø		630 mm 2‘ 1“ ft-in
Weight		1781 kg 3,926 lb

Tab. 262: Technical data derrick rope rigging with crossbar

Pendant straps on derrick boom 2220

Pendant straps on derrick boom section 2220.24 3 m (10 ft)

Adapter connecting link

Installation site in crane mode:
- Main boom 2821 + derrick boom 2220 (steel pendant straps) (For more information see: A-frame1 to 2220 derrick boom head pendant straps, page 1316)
- Main boom 2821 + derrick boom 2220 (CF pendant straps) (For more information see: A-frame1 to 2220 derrick boom head pendant straps, page 1320)

LWN/LR.x/V03.01/Auslieferung/2015-06-03/en

copyright by
LIEBHERR

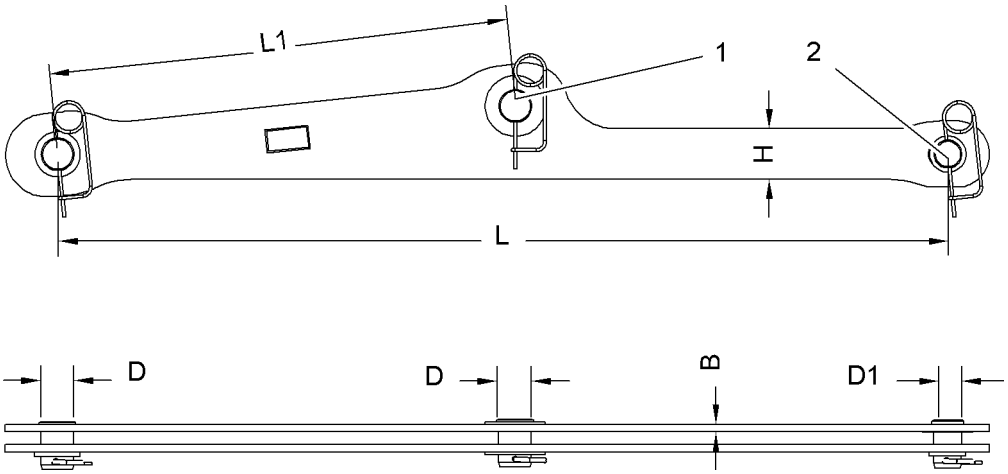

Fig. 419: Dimensions adapter connecting link

1 Pin connection point of A-frame1 equalizer - LR 1006

2 Pin connection point of A-frame1 equalizer - LR 1005

Name		Value
L	Length	1765 mm 5‘ 9“ ft-in
L1	Length	913 mm 3‘ ft-in
B	Width	15 mm 0.59“ in
H	Height	100 mm 3.94“ in
D	Pin Ø	65 mm 2.56“ in
D1	Pin Ø	55 mm 2.17“ in
Weight		15 kg 33.07 lb

Tab. 263: Technical data adapter connecting links

Pendant straps on derrick boom section 2220.22 11.7 m (38 ft)

Derrick boom pendant strap 12 m (40 ft)

Installation site in crane mode:
- Main boom 2821 + derrick boom 2220 (steel pendant straps) (For more information see: A-frame1 to 2220 derrick boom head pendant straps, page 1316)
- Main boom 2821 + derrick boom 2220 (CF pendant straps) (For more information see: A-frame1 to 2220 derrick boom head pendant straps, page 1320)

LWN/LR.x/V03.01//Auslieferung/2015-06-03/en

copyright by
LIEBHERR

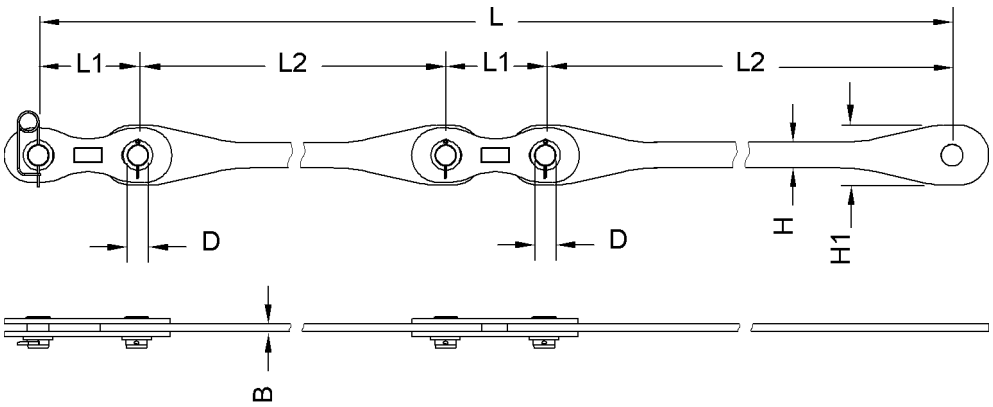

Fig. 420: Dimensions derrick boom pendant strap 12 m (40 ft)

Name		Value
L	Length	12000 mm 39‘ 4“ ft-in
L1	Length of connecting link	300 mm 1‘ ft-in
L2	Length of pendant strap	5700 mm 18‘ 8“ ft-in
B	Width of pendant strap	25 mm 0.98“ in
H	Height of pendant strap	77 mm 3.03“ in
H1	Height of pendant strap	180 mm 7.09“ in
D	Pin Ø	65 mm 2.56“ in
Weight		228 kg 503 lb

Tab. 264: Technical data derrick boom pendant strap 12 m (40 ft)

Pendant straps on derrick boom head 2220.22

Derrick boom pendant strap (crossbar)

Installation site in crane mode:
– Main boom 2821 + derrick boom 2220 (steel pendant straps) (For more information see: A-frame1 to 2220 derrick boom head pendant straps, page 1316)
– Main boom 2821 + derrick boom 2220 (CF pendant straps) (For more information see: A-frame1 to 2220 derrick boom head pendant straps, page 1320)

LWN/LR.x/V03.01//Auslieferung/2015-06-03/en

copyright by
LIEBHERR

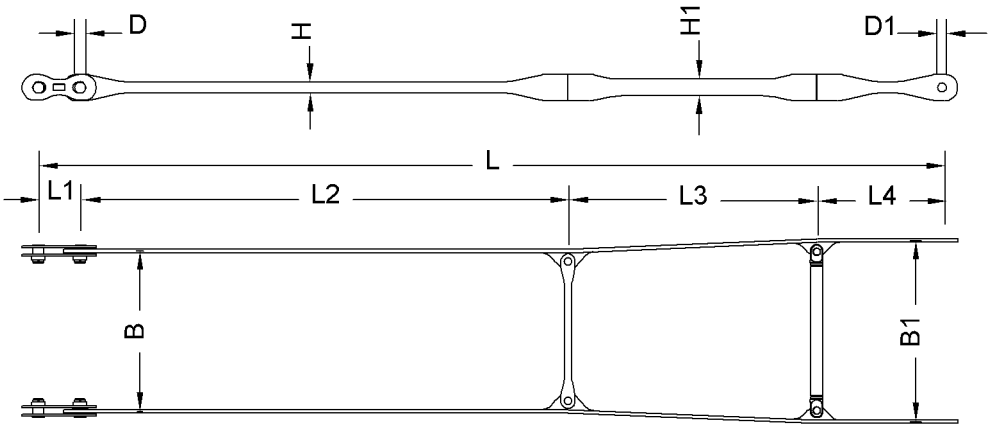

Fig. 421: Dimensions derrick boom pendant strap (crossbar)

Name		Value
L	Length	6500 mm 21‘ 4“ ft-in
L1	Length of connecting link	300 mm 1‘ ft-in
L2	Length	3510 mm 11‘ 6“ ft-in
L3	Length	1790 mm 5‘ 10“ ft-in
L4	Length	900 mm 2‘ 11“ ft-in
B	Width of crossbar	1150 mm 3‘ 9“ ft-in
B1	Width of crossbar	1300 mm 4‘ 3“ ft-in
H	Height of pendant strap	77 mm 3.03“ in
H1	Height of pendant strap	120 mm 4.72“ in
D	Pin Ø	75 mm 2.95“ in
D1	Pin Ø	65 mm 2.56“ in
Weight		175 kg 386 lb

Tab. 265: Technical data derrick boom pendant strap (crossbar)

LWN/LR.x/V03.01//Auslieferung/2015-06-03/en

copyright by
LIEBHERR

1.28.3 Suspended counterweight

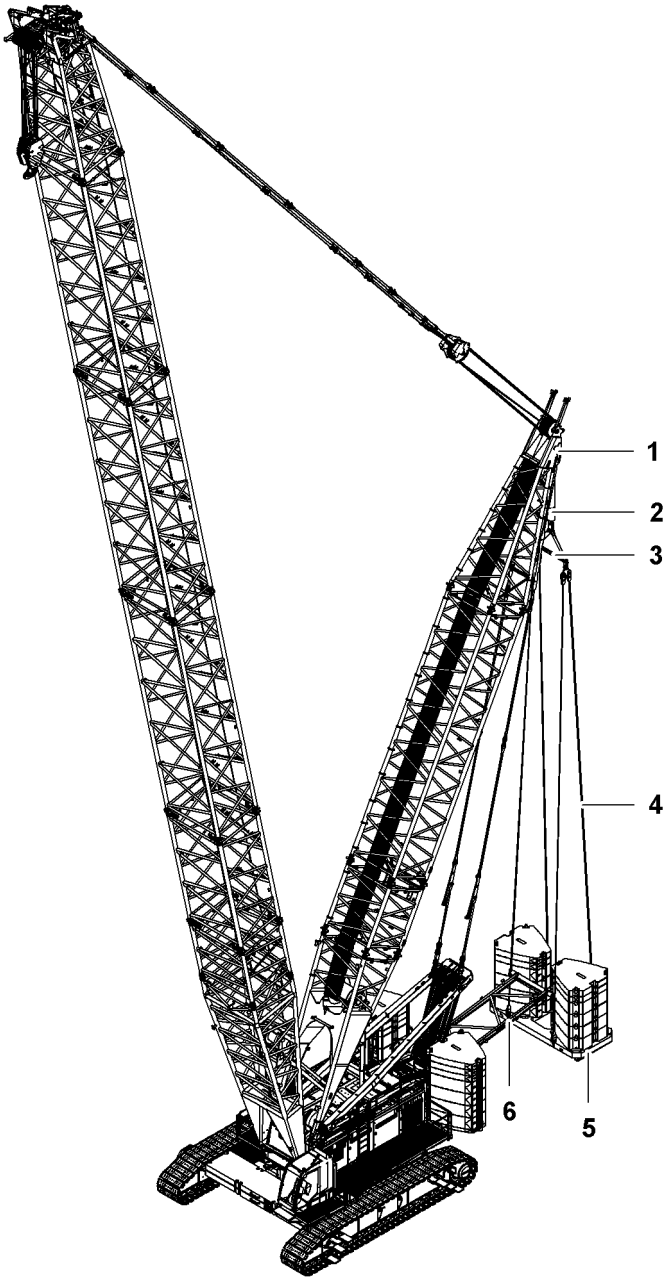

Fig. 422: Overview suspended counterweight

1	Derrick boom	**4**	Suspended counterweight pendant ropes
2	Derrick hoist cylinder	**5**	Counterweight frame
3	Crossbar	**6**	Spacer frame

The spacer frame **6** defines the radius of the suspended counterweight during rotating and moving. It is installed between the uppercarriage and the suspended counterweight **4** pendant ropes. To ensure correct positioning of the spacer frame **6**, it is installed with folding brackets and rope clamps on the front suspended counterweight pendant ropes **4**.

The four suspended counterweight pendant ropes **4** have a diameter of 34 mm (1.34“ in) and a length of 21.5 m (70‘ 6“ ft-in). They are installed between the spacer frame **6** and the crossbar **3**.

LWN/LR.x/V03.01//Auslieferung/2015-06-03/en

The derrick hoist cylinder **1** installed on the derrick boom **2** allows lifting of the suspended counterweight by up to 2 m (6‘ 7“ ft-in).

By placing counterweight slabs on the counterweight frame **5**, a maximum counterweight of 120 t (264,551 lb) can be realized.

Spacer frame

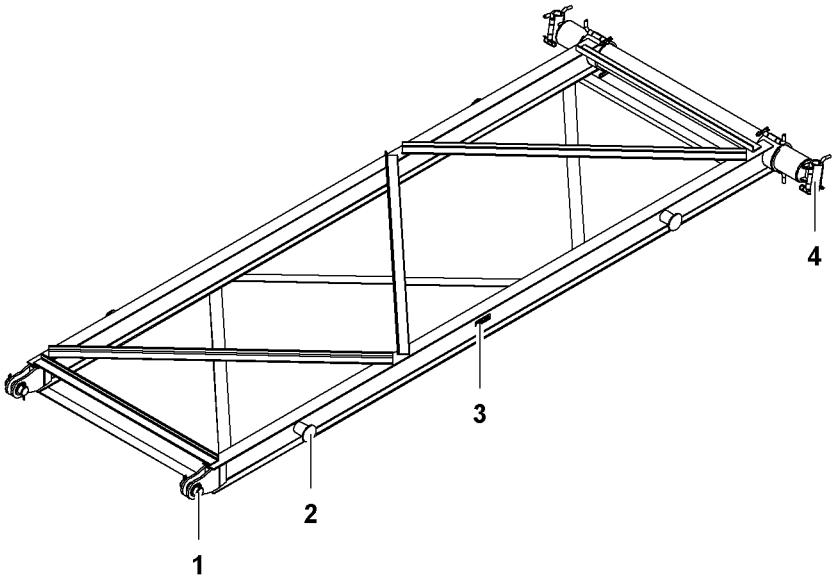

Fig. 423: Spacer frame

1	Pivot point (2x) for uppercarriage	**3**	Type designation LR 1300
2	Rigging point (4x)	**4**	Rope attachment (2x)

The pendant ropes are connected with the spacer frame on the two rope attachments **4**.

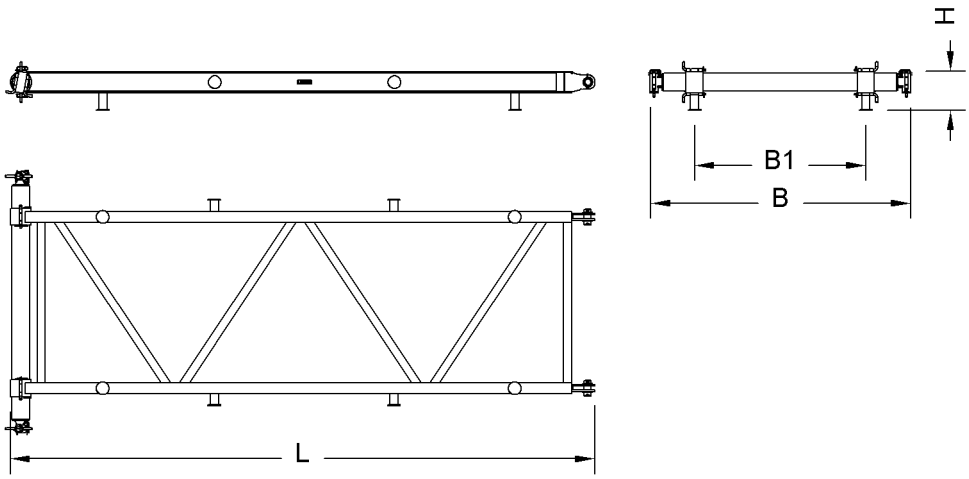

Fig. 424: Dimensions of spacer frame

Name		Value
L	Length	5533 mm 18‘ 2“ ft-in

LWN/LR.x/V03.01//Auslieferung/2015-06-03/en

copyright by
LIEBHERR

Name		Value
B	Width	2469 mm 8‘ 1“ ft-in
B1	Width	1620 mm 5‘ 4“ ft-in
H	Height	368 mm 1‘ 2“ ft-in
Weight		484 kg 1,067 lb

Tab. 266: Technical data spacer frame

Counterweight frame

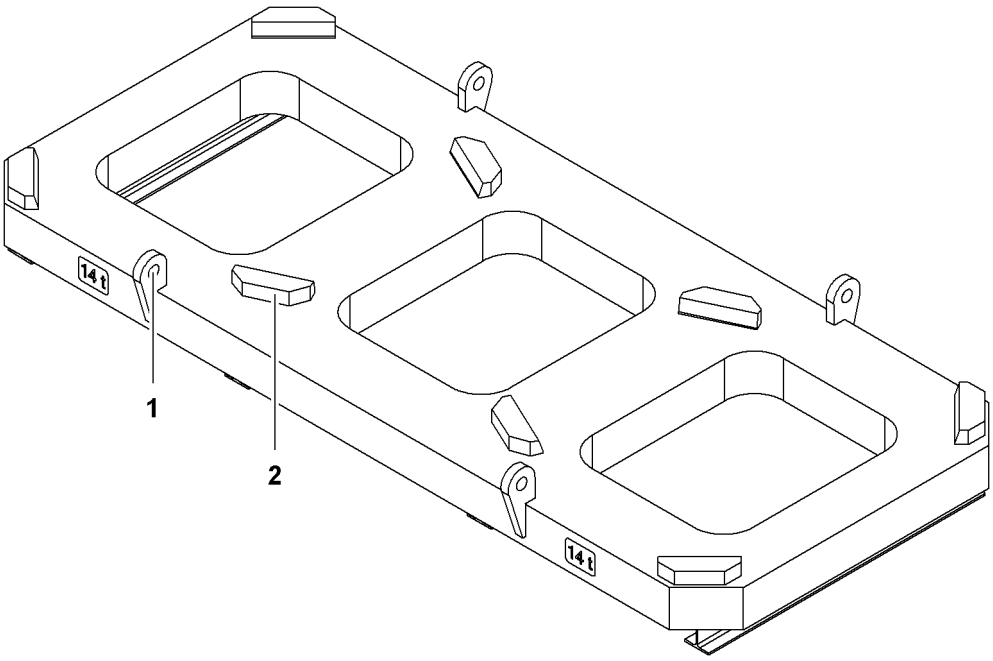

Fig. 425: Counterweight frame

1 Pin connection point (4x) for pendant ropes

2 Locking device (8x)

The Locking devices **2** prevent sliding of the counterweight slabs.

LWN/LR.x/V03.01//Auslieferung/2015-06-03/en

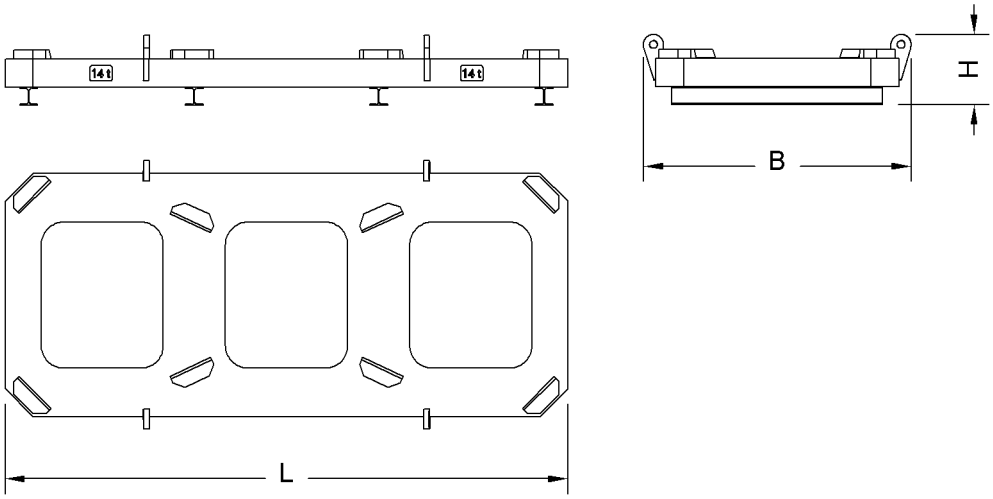

Fig. 426: Dimensions counterweight frames

Name		Value
L	Length	2170 mm 7‘ 1“ ft-in
B	Width	5020 mm 16‘ 6“ ft-in
H	Height	626 mm 2‘ 1“ ft-in
Weight		13700 kg 30,203 lb

Tab. 267: Technical data counterweight frame

Counterweight slab 10 t (22,046 lb)

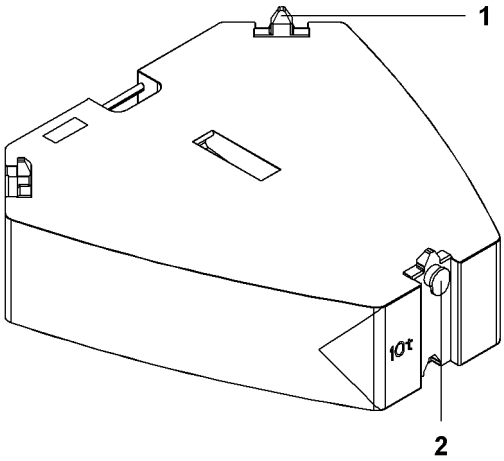

Fig. 427: Counterweight slab 10 t (22,046 lb)

1 Locking device (3x) **2** Rigging point (3x)

LWN/LR.x/V03.01//Auslieferung/2015-06-03/en

copyright by
LIEBHERR

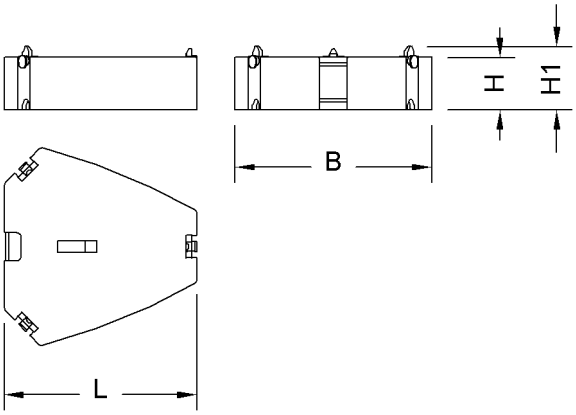

Fig. 428: Dimensions counterweight slab 10 t (22,046 lb)

Name		Value
L	Length	2050 mm 6‘ 9“ ft-in
B	Width	2117 mm 6‘ 11“ ft-in
H	Height	560 mm 1‘ 10“ ft-in
H1	Height incl. locking devices	680 mm 2‘ 3“ ft-in
Weight		10000 kg 22,046 lb

Tab. 268: Technical data counterweight slab 10 t (22,046 lb)

Counterweight slab 5 t (11,023 lb)

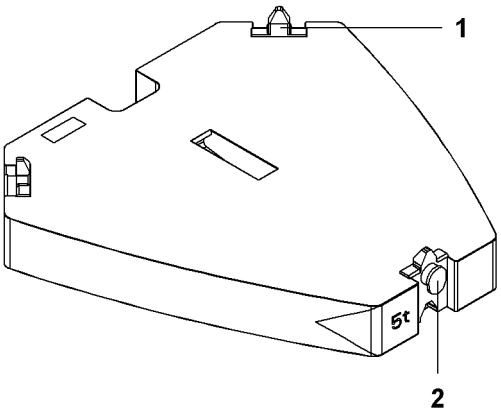

Fig. 429: Counterweight slab 5 t (11,023 lb)

1 Locking device (3x)

2 Rigging point (3x)

LWN/LR.x/V03.01//Auslieferung/2015-06-03/en

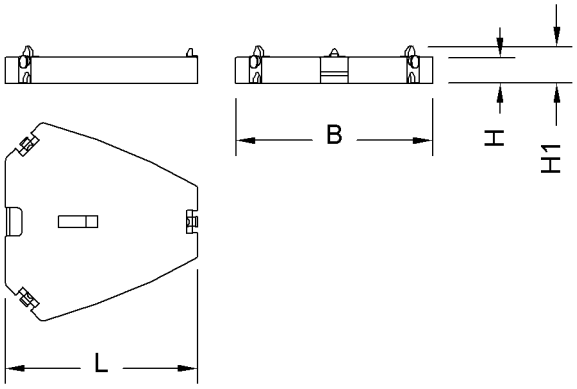

Fig. 430: Dimensions counterweight slab 5 t (11,023 lb)

Name		Value
L	Length	2050 mm 6‘ 9“ ft-in
B	Width	2117 mm 6‘ 11“ ft-in
H	Height	275 mm 10.83“ in
H1	Height incl. locking devices	395 mm 1‘ 4“ ft-in
Weight		5000 kg 11,023 lb

Tab. 269: Technical data counterweight slab 5 t (11,023 lb)

LWN/LR.x/V03.01//Auslieferung/2015-06-03/en

copyright by
LIEBHERR

1.28.4 Counterweight carriage

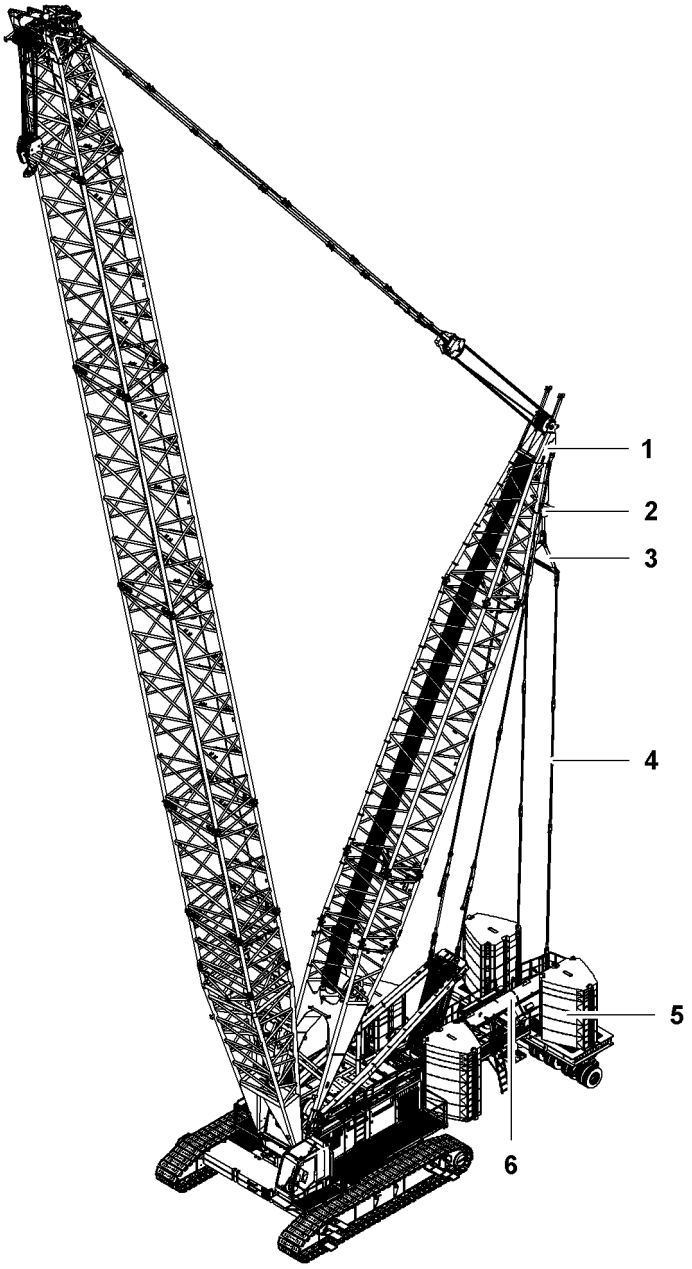

Fig. 431: Overview of counterweight carriage

1	Derrick boom	**4**	Counterweight carriage pendant straps
2	Derrick hoist cylinder	**5**	Counterweight carriage
3	Crossbar	**6**	Extension device

The counterweight carriage **5** is permanently pinned to the uppercarriage.

The wheel sets allow the counterweight to the pulled along and turned, even when the counterweight carriage pendant straps **4** are slack.

The counterweight carriage pendant straps **4** are installed with the connecting links between the counterweight carriage **5** and the crossbar **3**.

The derrick hoist cylinder **1** installed on the derrick boom **2** allows lifting the counterweight carriage **5** and/or careful addition of counterweight to the derrick boom **1**.

LWN/LR.x/V03.01//Auslieferung/2015-06-03/en

copyright by
LIEBHERR

The hydraulic telescopic extension device **5** of the counterweight carriage **5** allows adjusting the radius between rotation axis and counterweight from 12.15 m (39‘ 10“ ft-in) to 15.75 m (51‘ 8“ ft-in).

By placing counterweight slabs on the counterweight carriage **6**, a maximum counterweight of 120 t (264,551 lb) can be realized.

Extension device

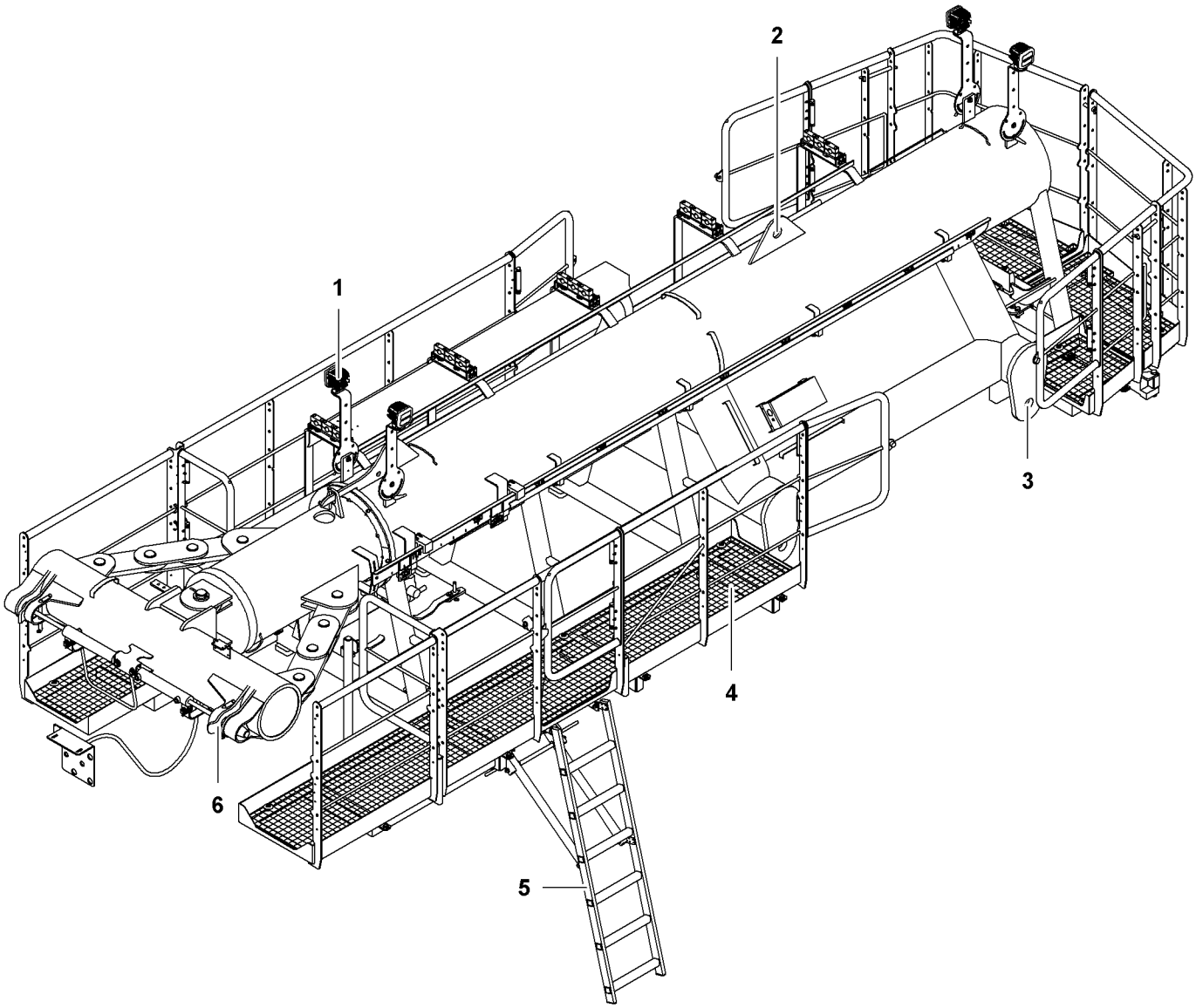

Fig. 432: Extension device

1	Floodlight (4x)	**3**	Pin connection point (4x) for counterweight carriage	**5**	Ladder
2	Rigging point (2x)	**4**	Platform and catwalks	**6**	Pin connection point (2x) for basic machine

LWN/LR.x/V03.01//Auslieferung/2015-06-03/en

copyright by
LIEBHERR

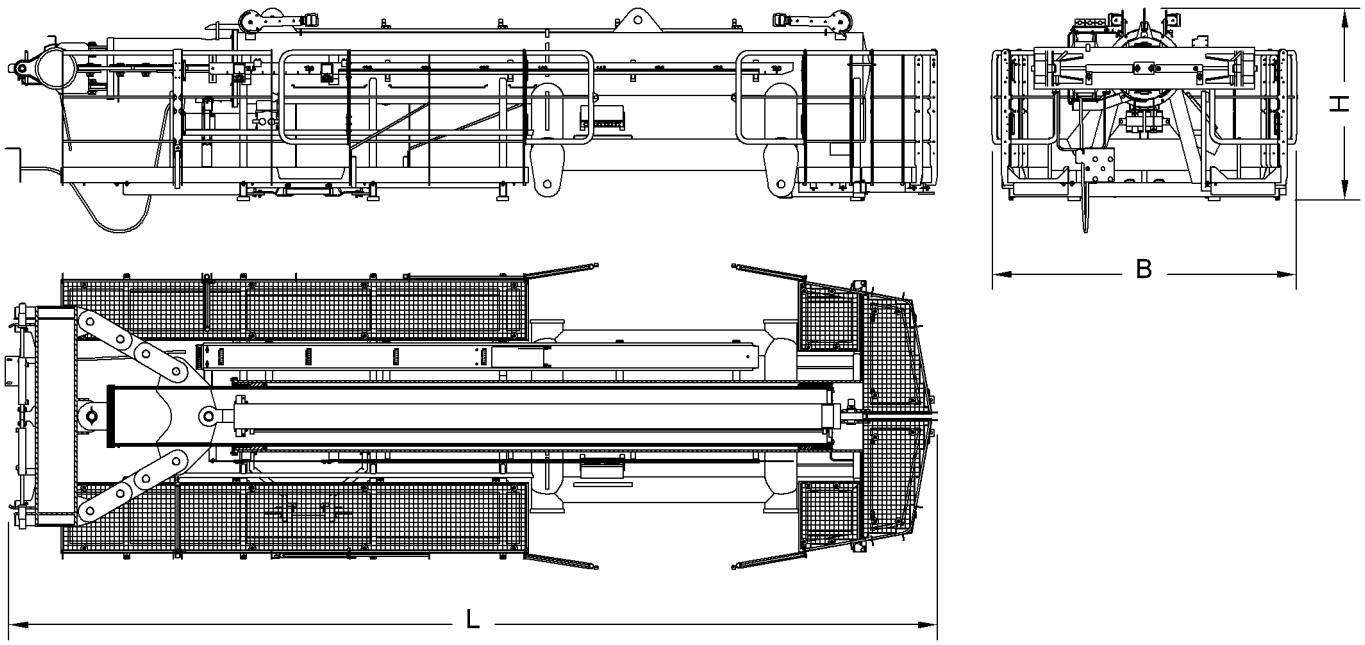

Fig. 433: Dimensions extension device

Name		Value
L	Length	7950 mm 26‘ 1“ ft-in
B	Width	2620 mm 8‘ 7“ ft-in
H	Height	1645 mm 5‘ 5“ ft-in
Weight		6700 kg 14,771 lb

Tab. 270: Technical data extension device

LWN/LR.x/V03.01//Auslieferung/2015-06-03/en

Counterweight carriage

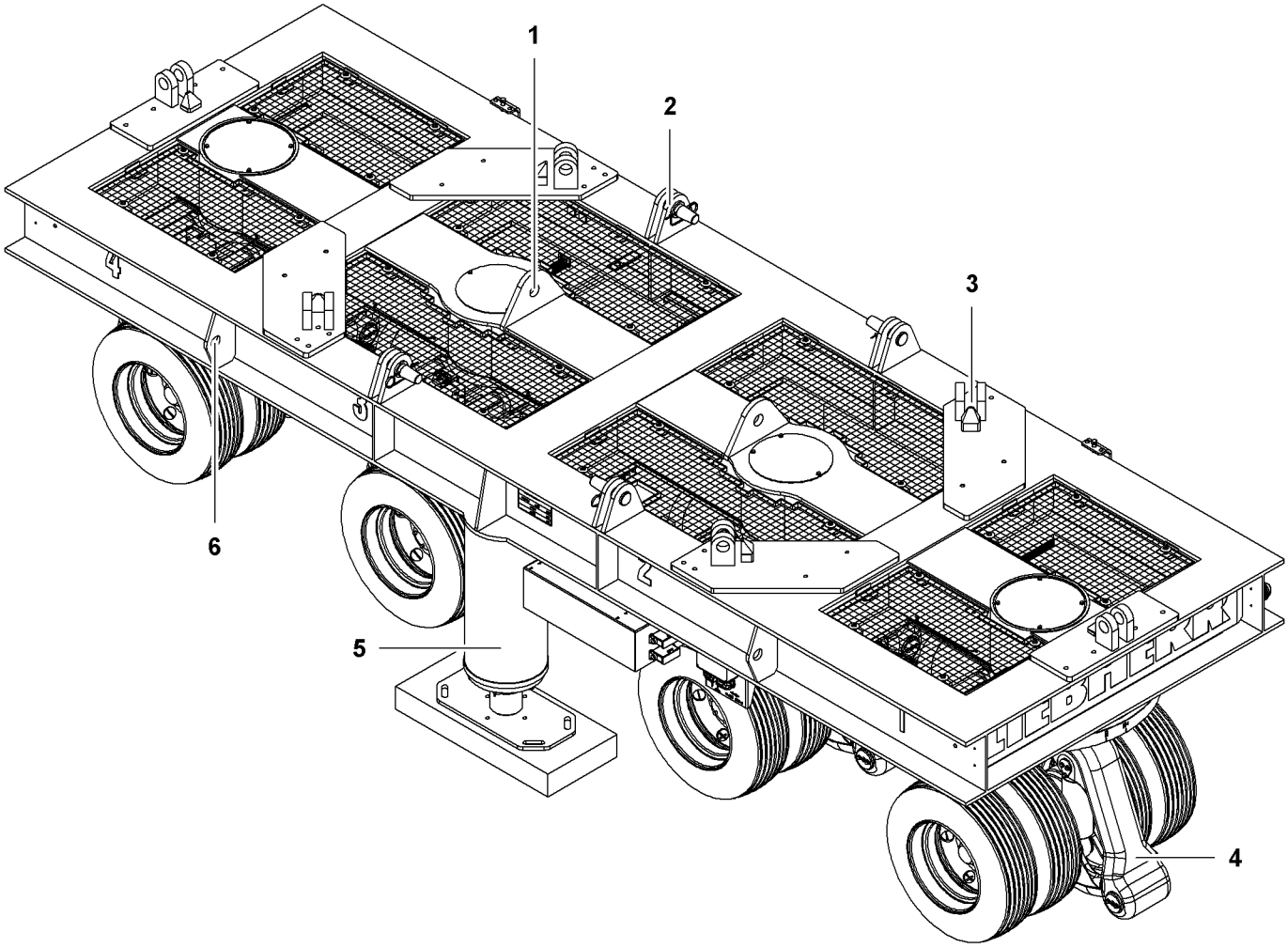

Fig. 434: Counterweight carriage

1	Pin connection point (2x) for counterweight carriage pendant straps	**3**	Locking device aid and back-stay shackle (6x)	**5**	Jack (2x)
2	Pin connection point (4x) for extension device	**4**	Wheel set (4x)	**6**	Rigging point (4x)

The counterweight carriage is equipped with four turning wheel sets **4**, which enable the uppercarriage to be moved and turned.

In order to also be able to align the wheel sets **4** when fully ballasted, all wheel sets **4** must be suspended using both jacks **5**.

The Locking device aids **3** prevent the counterweight slabs from sliding to the side. The counterweight slabs are additionally lashed on the backstay shackles **3**.

LWN/LR.x/V03.01//Auslieferung/2015-06-03/en

copyright by
LIEBHERR

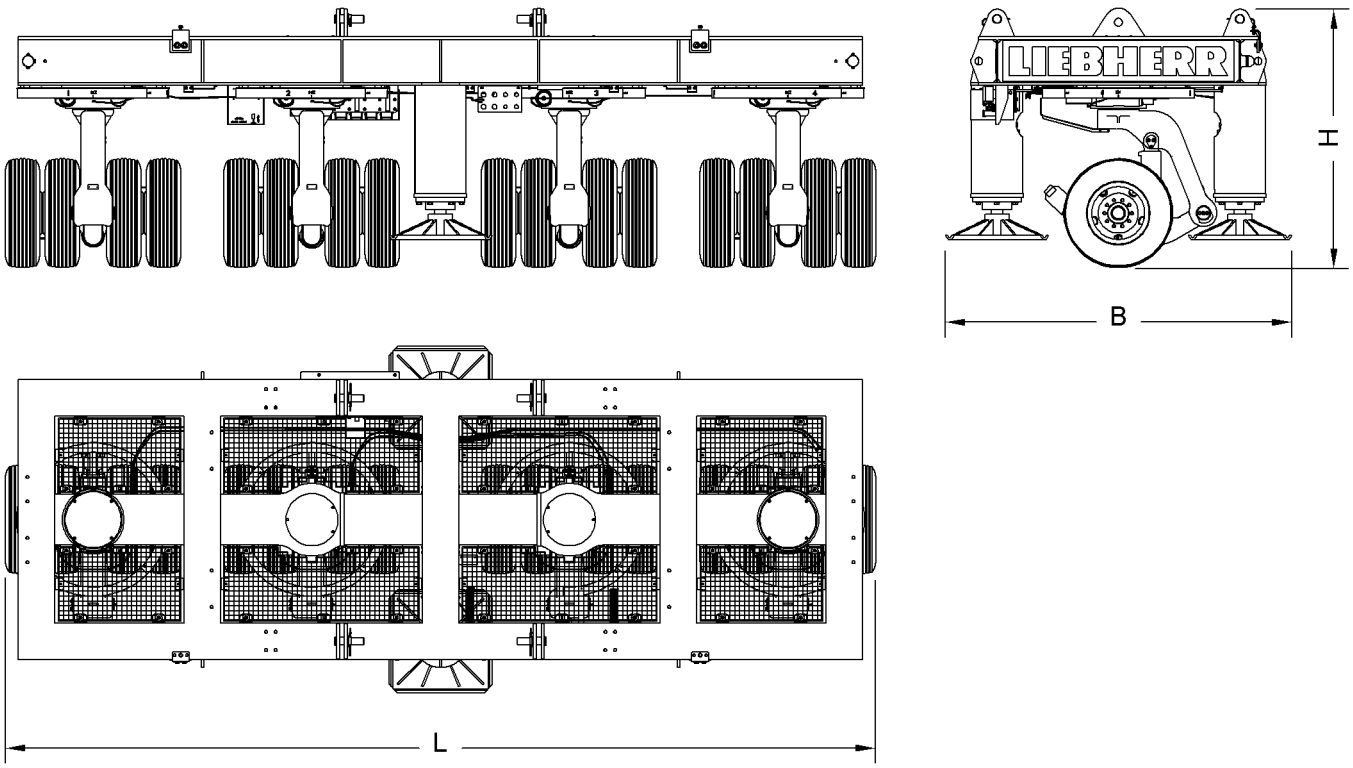

Fig. 435: Dimensions counterweight carriage

Name		Value
L	Length	7167 mm 23‘ 6“ ft-in
B	Width	2850 mm 9‘ 4“ ft-in
H	Height	2130 mm 7‘ ft-in
Weight		12187 kg 26,867 lb

Tab. 271: Technical data counterweight carriage

LWN/LR.x/V03.01//Auslieferung/2015-06-03/en

Counterweight slab 10 t (22,046 lb)

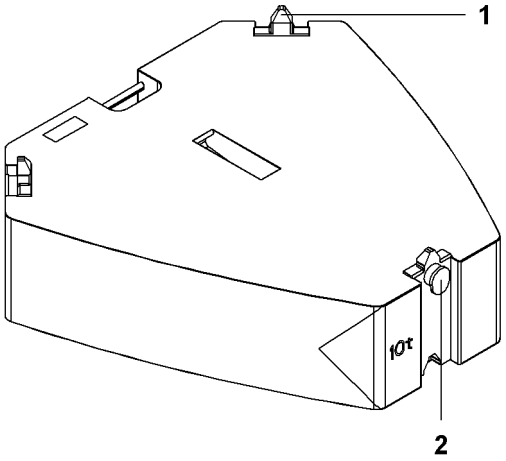

Fig. 436: Counterweight slab 10 t (22,046 lb)

1 Locking device (3x) **2** Rigging point (3x)

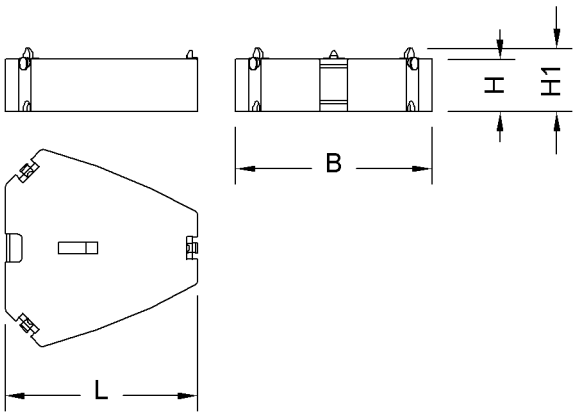

Fig. 437: Dimensions counterweight slab 10 t (22,046 lb)

Name		Value
L	Length	2050 mm 6‘ 9“ ft-in
B	Width	2117 mm 6‘ 11“ ft-in
H	Height	560 mm 1‘ 10“ ft-in
H1	Height incl. locking devices	680 mm 2‘ 3“ ft-in
Weight		10000 kg 22,046 lb

Tab. 272: Technical data counterweight slab 10 t (22,046 lb)

LWN/LR.x/V03.01//Auslieferung/2015-06-03/en

copyright by
LIEBHERR

Counterweight slab 5 t (11,023 lb)

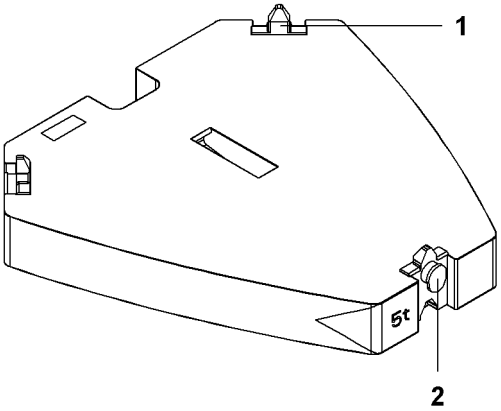

Fig. 438: Counterweight slab 5 t (11,023 lb)

1 Locking device (3x) **2** Rigging point (3x)

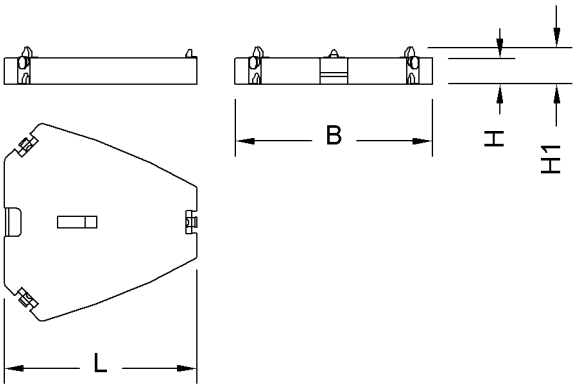

Fig. 439: Dimensions counterweight slab 5 t (11,023 lb)

Name		Value
L	Length	2050 mm 6‘ 9“ ft-in
B	Width	2117 mm 6‘ 11“ ft-in
H	Height	275 mm 10.83“ in
H1	Height incl. locking devices	395 mm 1‘ 4“ ft-in
Weight		5000 kg 11,023 lb

Tab. 273: Technical data counterweight slab 5 t (11,023 lb)

LWN/LR.x/V03.01//Auslieferung/2015-06-03/en

copyright by
LIEBHERR

1.29 Rope fixation

1.29.1 Main boom head

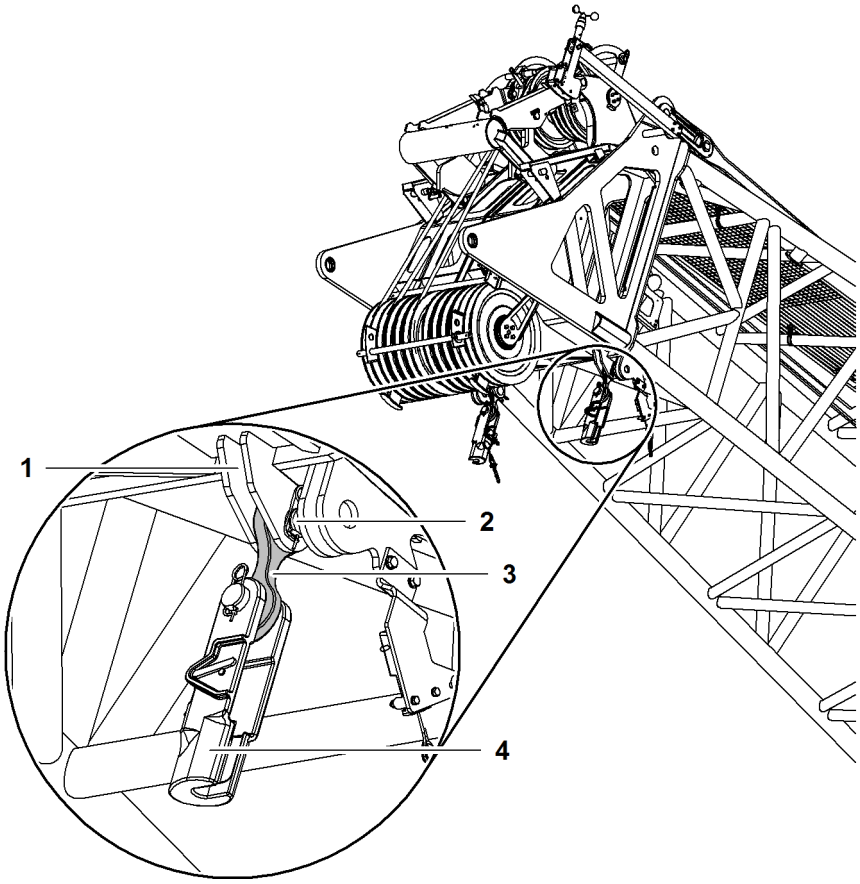

Fig. 440: Rope fixing point on main boom head (illustration of principle)

1	Pivot point (4x) for rope fixing point	**3**	Cross link
2	Pin for rope fixing point	**4**	Pocket lock

LWN/LR.x/V03.01//Auslieferung/2015-06-03/en

copyright by
LIEBHERR

1.29.2 Fixed jib head

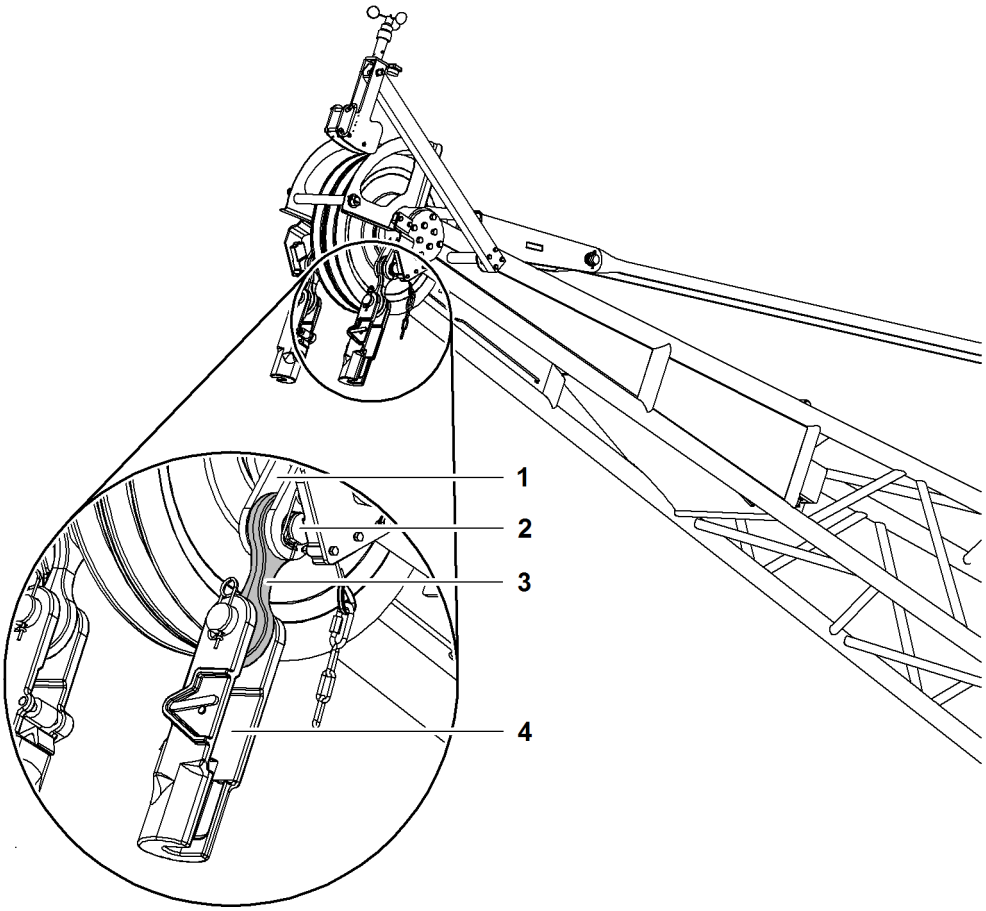

Fig. 441: Rope fixing point on fixed jib head (illustration of principle)

1	Pivot point (2x) for rope fixing point	**3**	Cross link
2	Pin for rope fixing point	**4**	Pocket lock

The components of the rope fixing point are identical for the main boom head and the jib head.

LWN/LR.x/V03.01//Auslieferung/2015-06-03/en

1.29.3 Luffing jib head

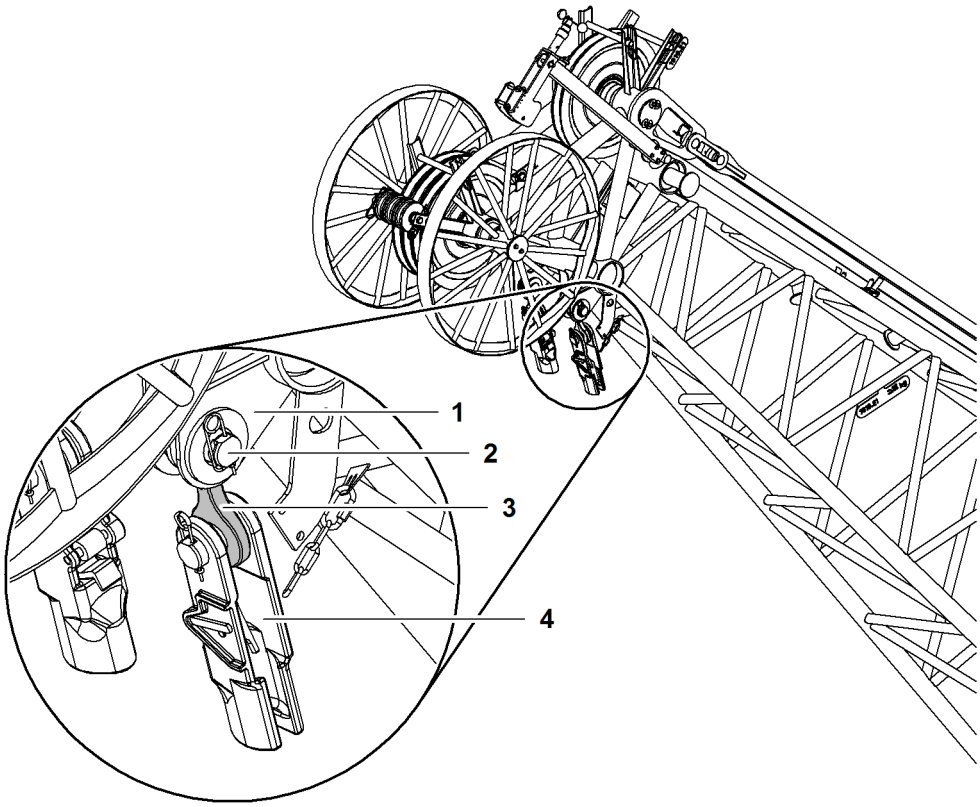

Fig. 442: Rope fixing point on luffing jib head (illustration of principle)

1	Pivot point (2x) for rope fixing point	**3**	Cross link
2	Pin for rope fixing point	**4**	Pocket lock

The components of the rope fixing point are identical for the main boom head and the jib head.

LWN/LR.x/V03.01//Auslieferung/2015-06-03/en

copyright by
LIEBHERR

1.29.4 Auxiliary jib (36 t (79.300 lb)) on main boom head

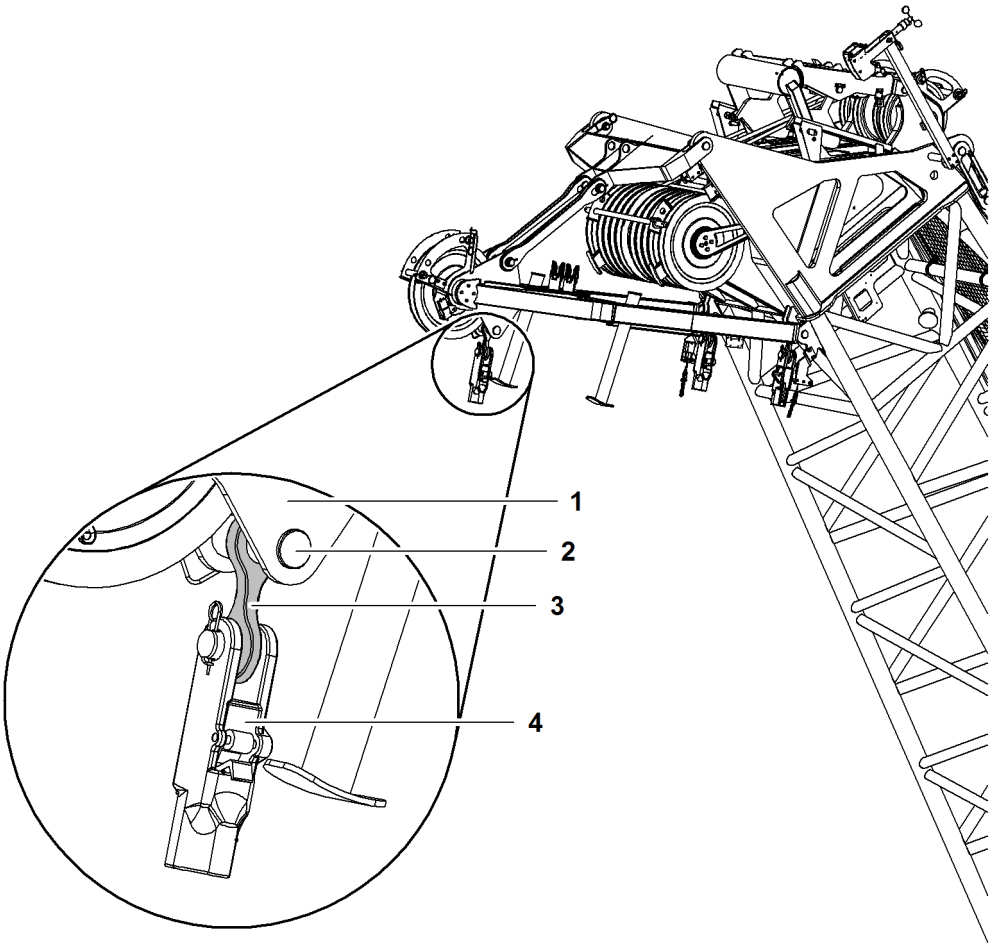

Fig. 443: Rope fixing point on auxiliary jib (36 t (79.300 lb)) (illustration of principle)

1	Pivot point for rope fixing point	**3**	Cross link
2	Pin for rope fixing point	**4**	Pocket lock

The components of the rope fixing point are identical for the main boom head and the auxiliary jib (36 t (79.300 lb)).

1.29.5 Auxiliary jib (15 t (33.000 lb)) on jib head

There is no rope fixing point on the auxiliary jib (15 t (33.000 lb)) because reeving is only done once.

LWN/LR.x/V03.01//Auslieferung/2015-06-03/en

copyright by
LIEBHERR

1.29.6 Midfall

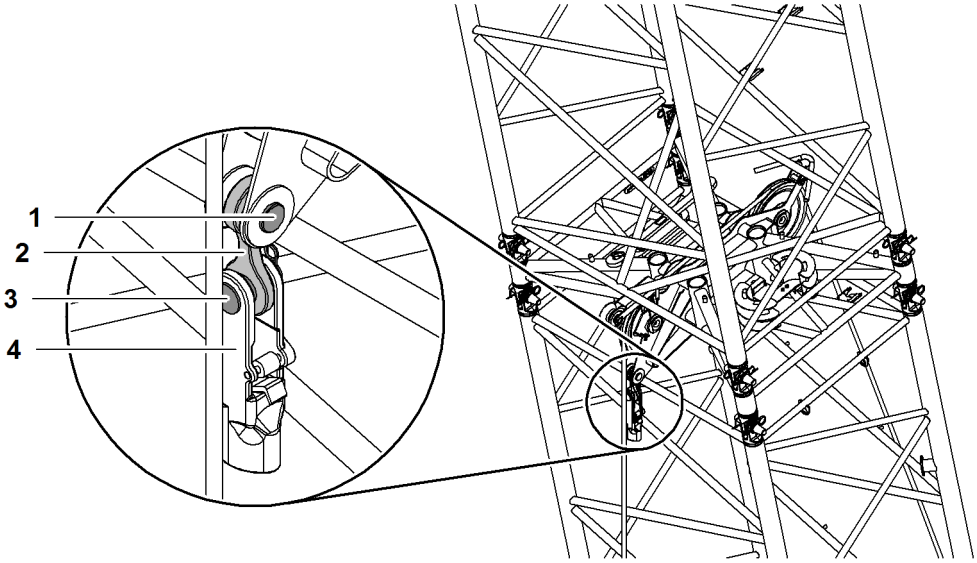

Fig. 444: Rope fixing point on midfall (illustration of principle)

1	Pin for rope fixing point	**3**	Pins for pocket lock
2	Cross link	**4**	Pocket lock

The components of the rope fixing point are identical for the jib head and the midfall.

1.29.7 Pocket lock

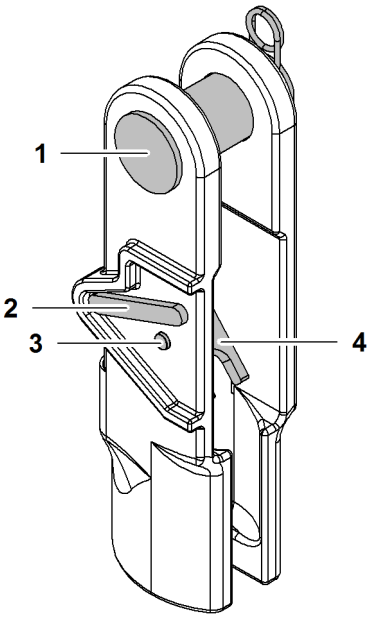

Fig. 445: Pocket lock

1	Pin	**3**	Safety button
2	Safety latch	**4**	Locking device

LWN/LR.x/V03.01//Auslieferung/2015-06-03/en

copyright by
LIEBHERR

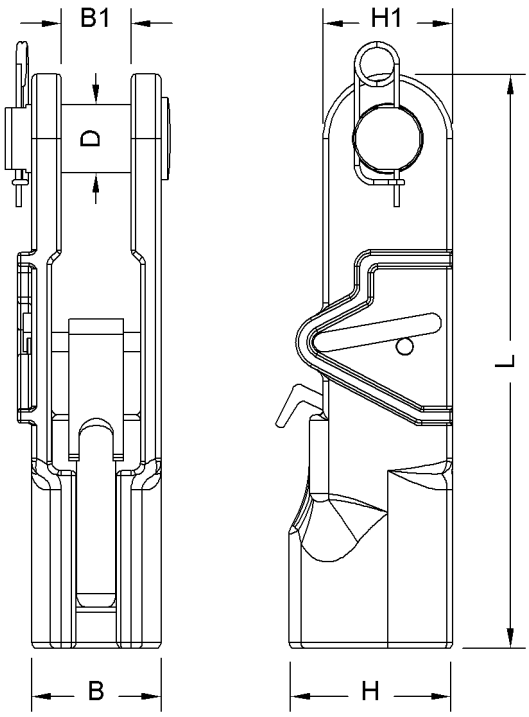

Fig. 446: Pocket lock dimensions

Designation		Value
L	Length	533 mm 1‘ 9“ ft-in
B	Width	107 mm 4.21“ in
B1	Width	57 mm 2.24“ in
H	Height	142 mm 5.59“ in
H1	Height	95 mm 3.74“ in
D	Pin Ø	57 mm 2.24“ in
Weight		28.8 kg 63.49 lb
Rope Ø		27 mm (1.06“ in) to 29 mm (1.14“ in)

Tab. 274: Pocket lock technical data

LWN/LR.x/V03.01//Auslieferung/2015-06-03/en

1.29.8 Cross strap

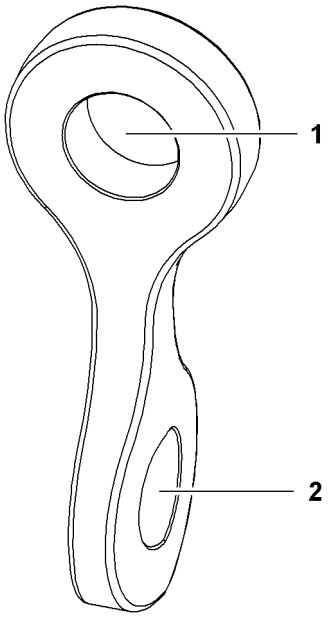

Fig. 447: Cross strap

1 Pivot point on boom head (Ø 52 mm (2.05“ in))

2 Pivot point on pocket lock (Ø 58 mm (2.28“ in))

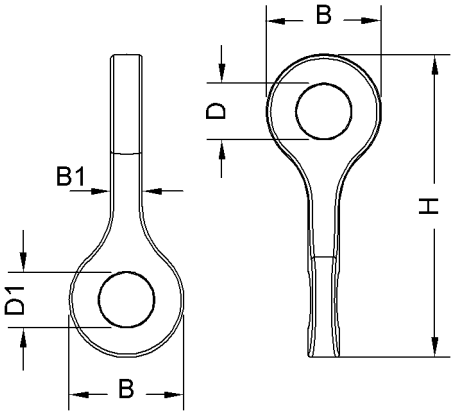

Fig. 448: Cross strap dimensions

Designation		Value
B	Width	110 mm 4.33“ in
B1	Width	30 mm 1.18“ in
H	Height	290 mm 11.42“ in
D	Pin Ø	52 mm 2.05“ in
D1	Pin Ø	58 mm 2.28“ in

LWN/LR.x/V03.01//Auslieferung/2015-06-03/en

copyright by
LIEBHERR

Designation	Value
Weight	4.7 kg 10.36 lb

Tab. 275: Cross strap technical data

1.29.9 Pins for the rope fixing point

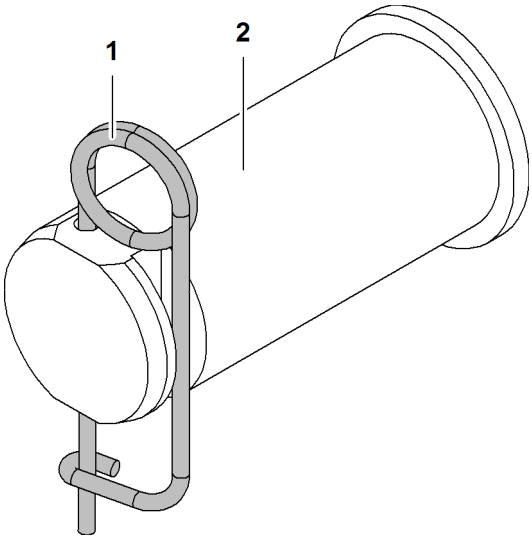

Fig. 449: Pins for the rope fixing point

1 Locking spring
2 Pin
3 Pin collar

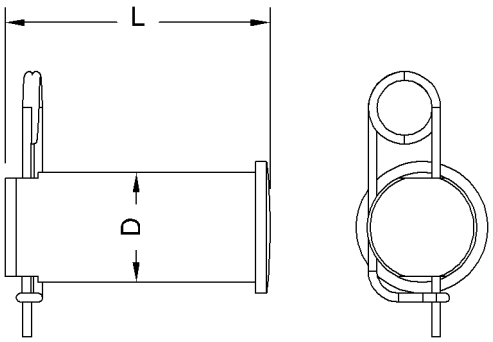

Fig. 450: Dimensions of the pins for the rope fixing point

Designation		Value
L	Length	115 mm 4.53“ in
D	Pin Ø	50 mm 1.97“ in
Weight		2 kg 4.41 lb

Tab. 276: Technical data: rope fixing point pins

LWN/LR.x/V03.01//Auslieferung/2015-06-03/en

1.30 Pulley block/hook*

1.30.1 Pulley block (300 t (661,377 lb))

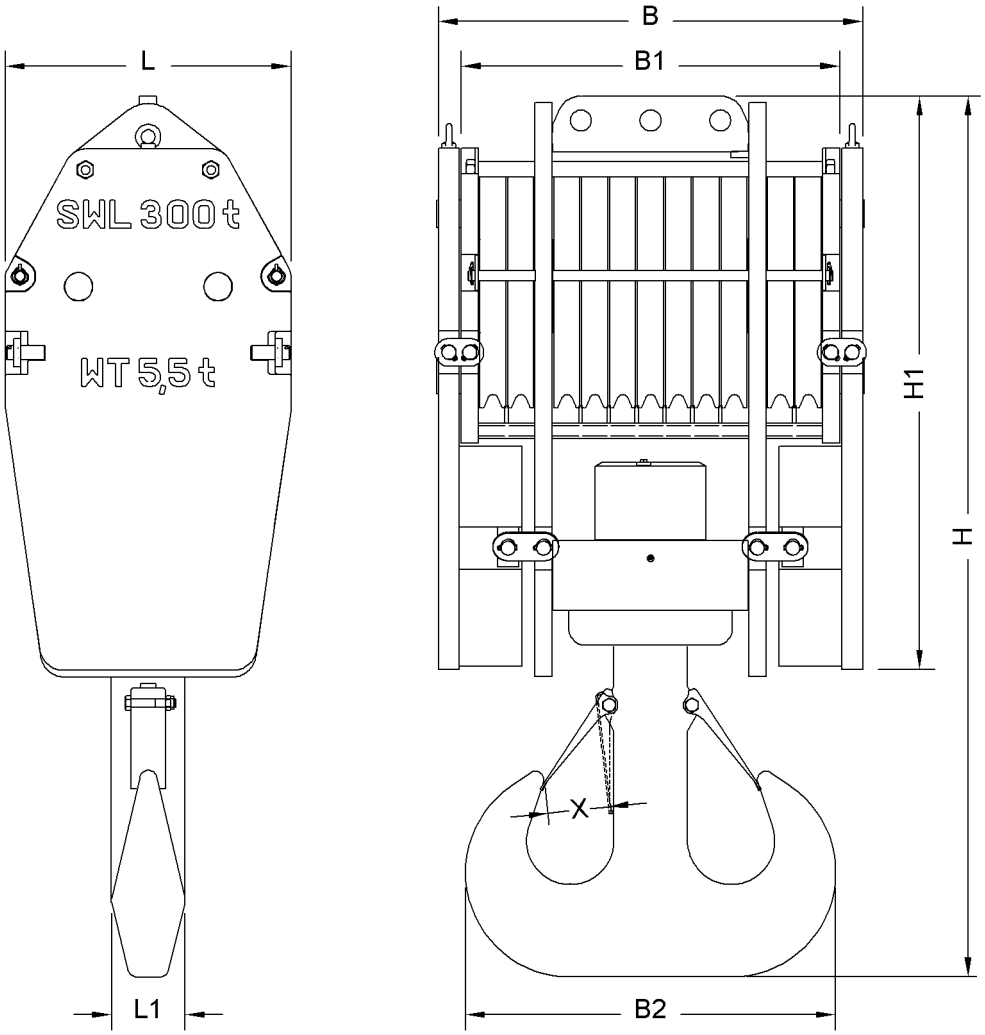

Fig. 451: Pulley block dimensions (300 t (661,377 lb))

Name		Value
L	Pulley block length	820 mm 2‘ 8“ ft-in
L1	Hook length	212 mm 8.35“ in
B	Pulley block width with additional weights	1227 mm 4‘ ft-in
B1	Width of pulley block without additional weights	1097 mm 3‘ 7“ ft-in
B2	Hook width	1062 mm 3‘ 6“ ft-in

LWN/LR.x/V03.01//Auslieferung/2015-06-03/en

copyright by
LIEBHERR

Name		Value
H	Height of pulley block with hook	2523 mm 8‘ 3“ ft-in
H1	Height of pulley block without hook	1665 mm 5‘ 6“ ft-in
X	Jaw width	175 mm 6.89“ in
Weight with additional weights		5500 kg 12,125 lb
Weight without additional weights		3200 kg 7,055 lb
Maximum reeving		23
Rope Ø		28 mm 1.10“ in

Tab. 277: Technical data pulley block (300 t (661,377 lb))

1.30.2 Pulley block (160 t (352,734 lb))

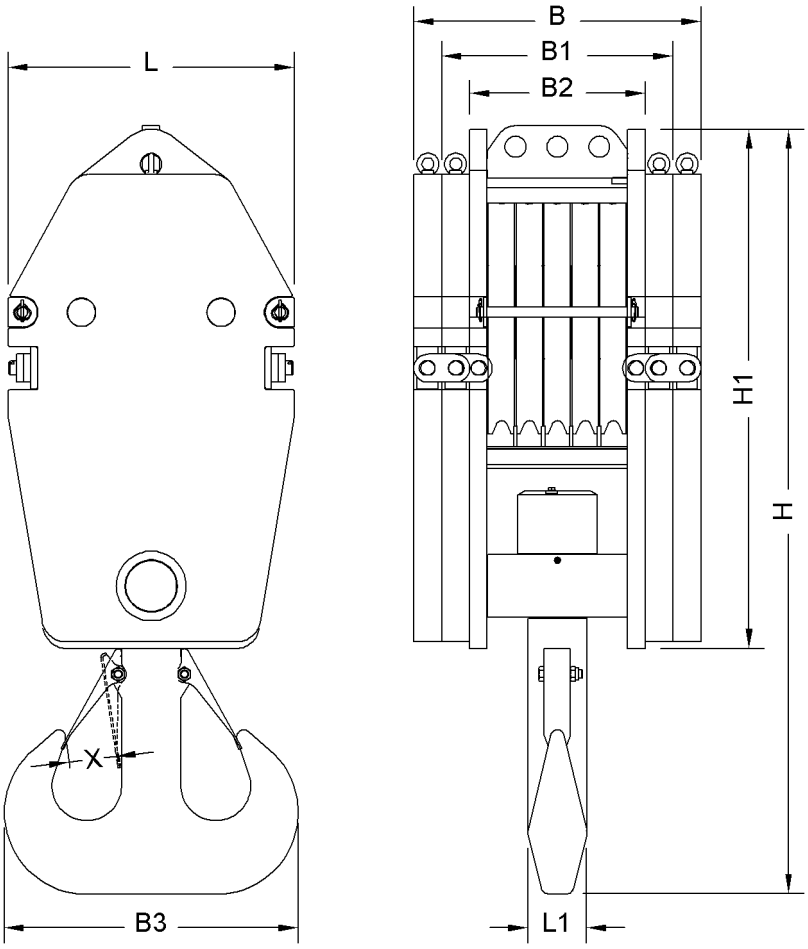

Fig. 452: Pulley block dimensions (160 t (352,734 lb))

LWN/LR.x/V03.01//Auslieferung/2015-06-03/en

Name		Value
L	Pulley block length	820 mm 2‘ 8“ ft-in
L1	Hook length	170 mm 6.69“ in
B	Pulley block width with four additional weights	823 mm 2‘ 8“ ft-in
B1	Pulley block width with two additional weights	663 mm 2‘ 2“ ft-in
B2	Width of pulley block without additional weights	503 mm 1‘ 8“ ft-in
B3	Hook width	842 mm 2‘ 9“ ft-in
H	Height of pulley block with hook	2205 mm 7‘ 3“ ft-in
H1	Height of pulley block without hook	1490 mm 4‘ 11“ ft-in
X	Jaw width	135 mm 5.31“ in
Weight with four additional weights		4000 kg 8,818 lb
Weight with two additional weights		2800 kg 6,173 lb
Weight without additional weights		1600 kg 3,527 lb
Maximum reeving		11
Rope Ø		28 mm 1.10“ in

Tab. 278: Technical data pulley block (160 t (352,734 lb))

LWN/LR.x/V03.01//Auslieferung/2015-06-03/en

copyright by
LIEBHERR

1.30.3 Pulley block (100 t (220,459 lb))

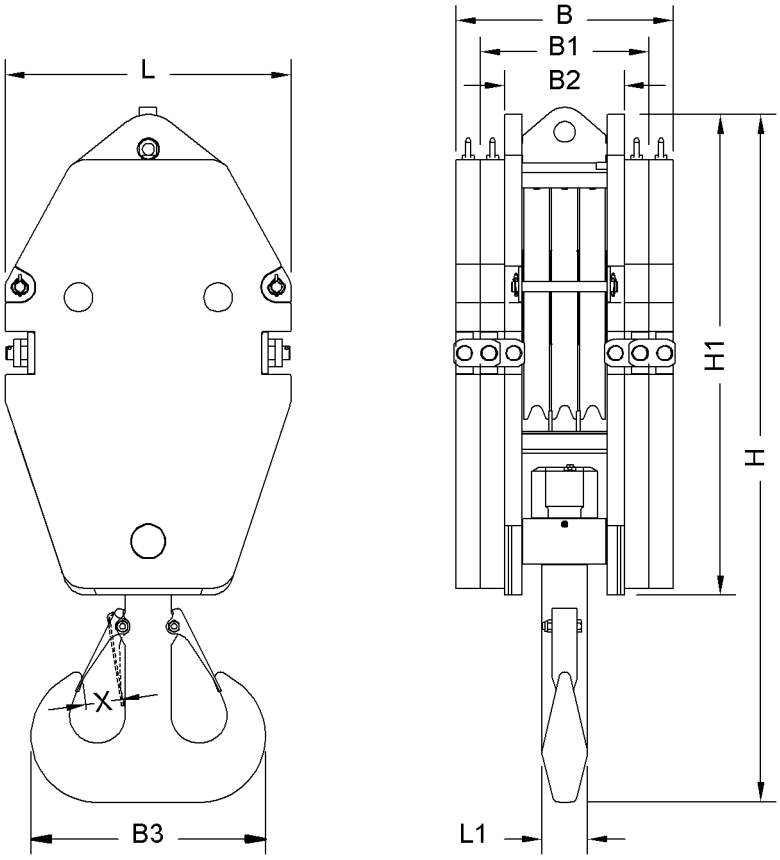

Fig. 453: Pulley block dimensions (100 t (220,459 lb))

Name		Value
L	Pulley block length	820 mm 2‘ 8“ ft-in
L1	Hook length	132 mm 5.20“ in
B	Pulley block width with four additional weights	623 mm 2‘ 1“ ft-in
B1	Pulley block width with two additional weights	483 mm 1‘ 7“ ft-in
B2	Width of pulley block without additional weights	343 mm 1‘ 2“ ft-in
B3	Hook width	672 mm 2‘ 2“ ft-in
H	Height of pulley block with hook	1994 mm 6‘ 7“ ft-in
H1	Height of pulley block without hook	1380 mm 4‘ 6“ ft-in
X	Jaw width	100 mm 3.94“ in

LWN/LR.x/V03.01//Auslieferung/2015-06-03/en

copyright by
LIEBHERR

Name	Value
Weight with four additional weights	3000 kg 6,614 lb
Weight with two additional weights	2050 kg 4,519 lb
Weight without additional weights	1100 kg 2,425 lb
Maximum reeving	7
Rope Ø	28 mm 1.10“ in

Tab. 279: Technical data pulley block (100 t (220,459 lb))

1.30.4 Pulley block (50 t (110,230 lb))

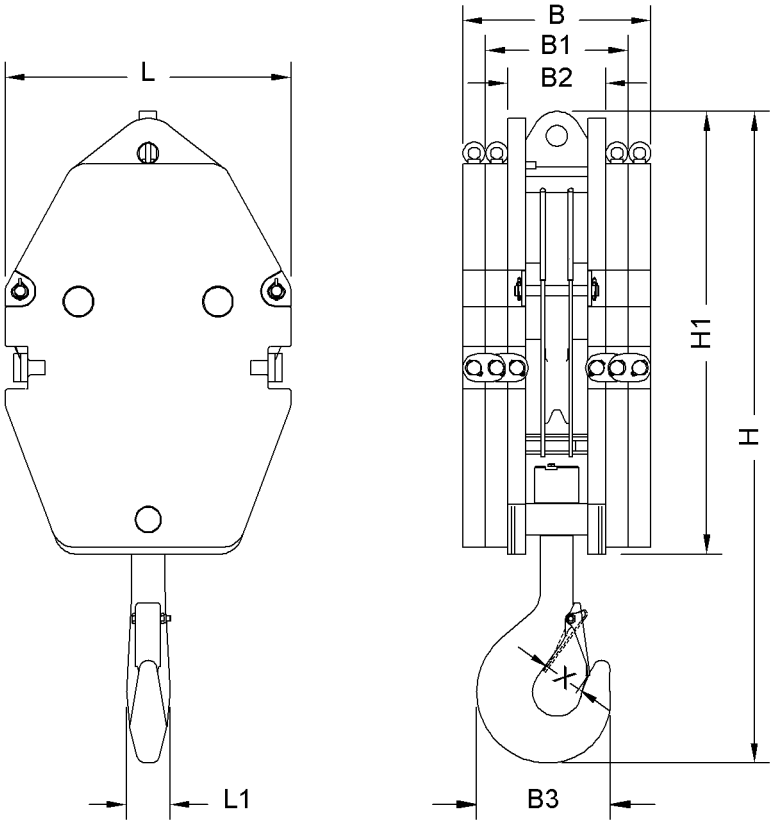

Fig. 454: Pulley block dimensions (50 t (110,230 lb))

Name		Value
L	Pulley block length	820 mm 2‘ 8“ ft-in
L1	Hook length	125 mm 4.92“ in
B	Pulley block width with four additional weights	540 mm 1‘ 9“ ft-in

LWN/LR.x/V03.01//Auslieferung/2015-06-03/en

copyright by
LIEBHERR

Name		Value
B1	Pulley block width with two additional weights	410 mm 1‘ 4“ ft-in
B2	Width of pulley block without additional weights	280 mm 11.02“ in
B3	Hook width	384 mm 1‘ 3“ ft-in
H	Height of pulley block with hook	1852 mm 6‘ 1“ ft-in
H1	Height of pulley block without hook	1270 mm 4‘ 2“ ft-in
X	Jaw width	100 mm 3.94“ in
Weight with four additional weights		2400 kg 5,291 lb
Weight with two additional weights		1600 kg 3,527 lb
Weight without additional weights		800 kg 1,764 lb
Maximum reeving		3
Rope Ø		28 mm 1.10“ in

Tab. 280: Technical data pulley block (50 t (110,230 lb))

1.30.5 Hook (16 t (35,273 lb))

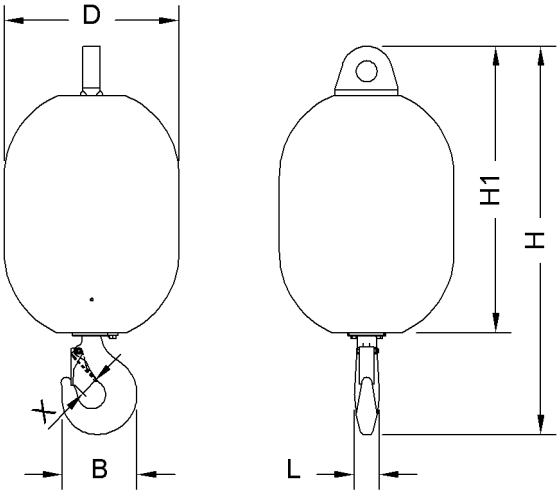

Fig. 455: Hook dimensions (16 t (35,273 lb))

Name		Value
L	Hook length	71 mm 2.80“ in

LWN/LR.x/V03.01//Auslieferung/2015-06-03/en

Name		Value
B	Hook width	217 mm 8.54“ in
H	Height of pulley block with hook	1115 mm 3‘ 8“ ft-in
H1	Height of pulley block without hook	822 mm 2‘ 8“ ft-in
D	Hook Ø	500 mm 1‘ 8“ ft-in
X	Jaw width	50 mm 1.97“ in
Weight		900 kg 1,984 lb
Maximum reeving		1
Suitable for pocket lock for rope Ø		27 mm (1.06“ in) to 29 mm (1.14“ in)

Tab. 281: Technical data hook (16 t (35,273 lb))

LWN/LR.x/V03.01//Auslieferung/2015-06-03/en

copyright by
LIEBHERR

1.31 Abseil rescue equipment*

The abseil rescue equipment BORNACK KE 10 St crane is behind the driver's seat in the cab.

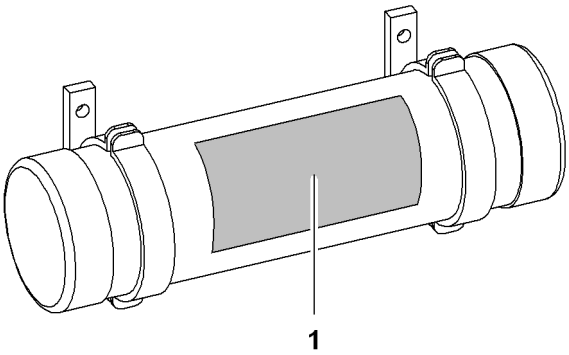

Fig. 456: Abseil rescue equipment

1 Operating instructions

LWN/LR.x/V03.01//Auslieferung/2015-06-03/en

copyright by
LIEBHERR

1.32 Safety barrier*

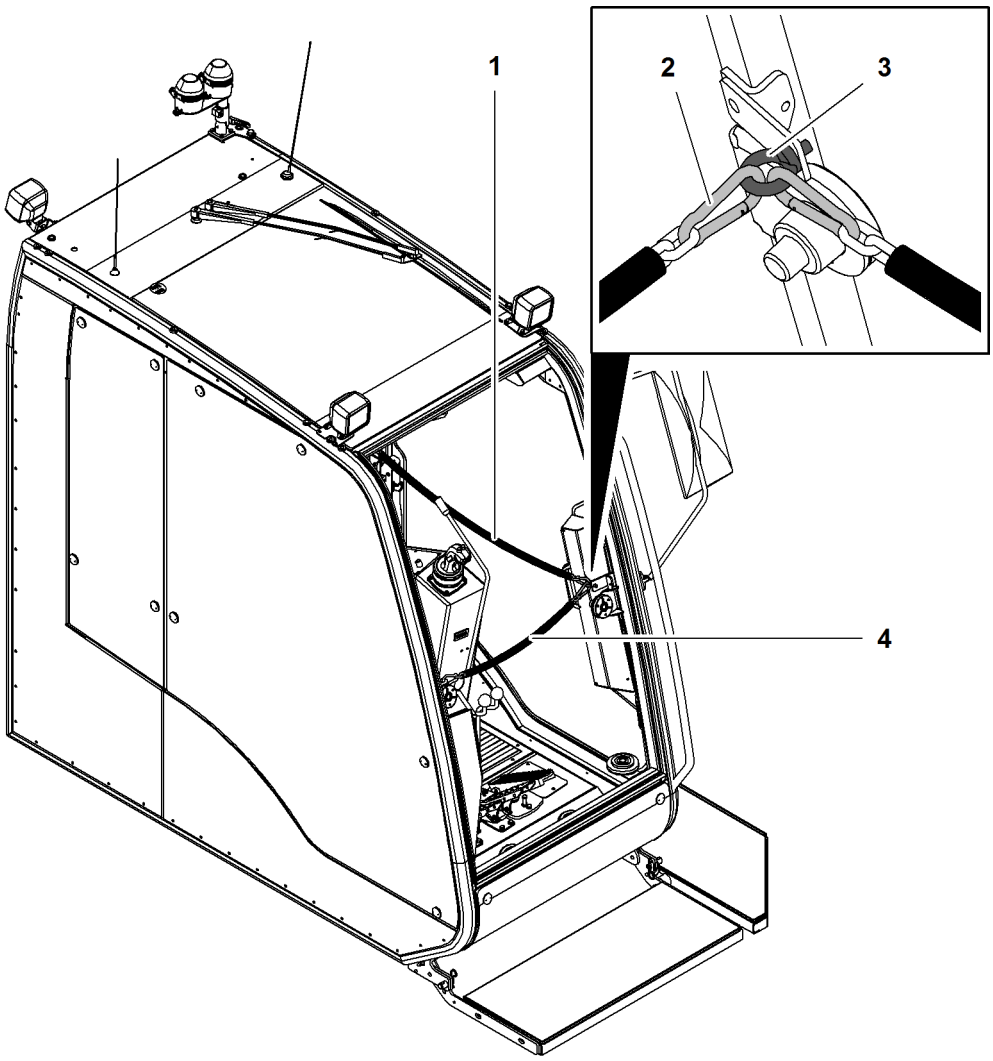

Fig. 457: Fall arrest

1	Chain	**3**	Eye bolt (3x)
2	Carabiner (4x)	**4**	Chain

WARNING
No safety barrier on the operator's platform!
risk of falling from the cab.

▶ Ensure that the chains are attached properly when entering the cab.

The safety barrier consists of 2 chains:

– Chain **1** is fitted in front of the cab door.
– Chain **4** is fitted in front of the front windscreen.

LWN/LR.x/V03.01//Auslieferung/2015-06-03/en

copyright by
LIEBHERR

1.33 Slinging plates on uppercarriage*

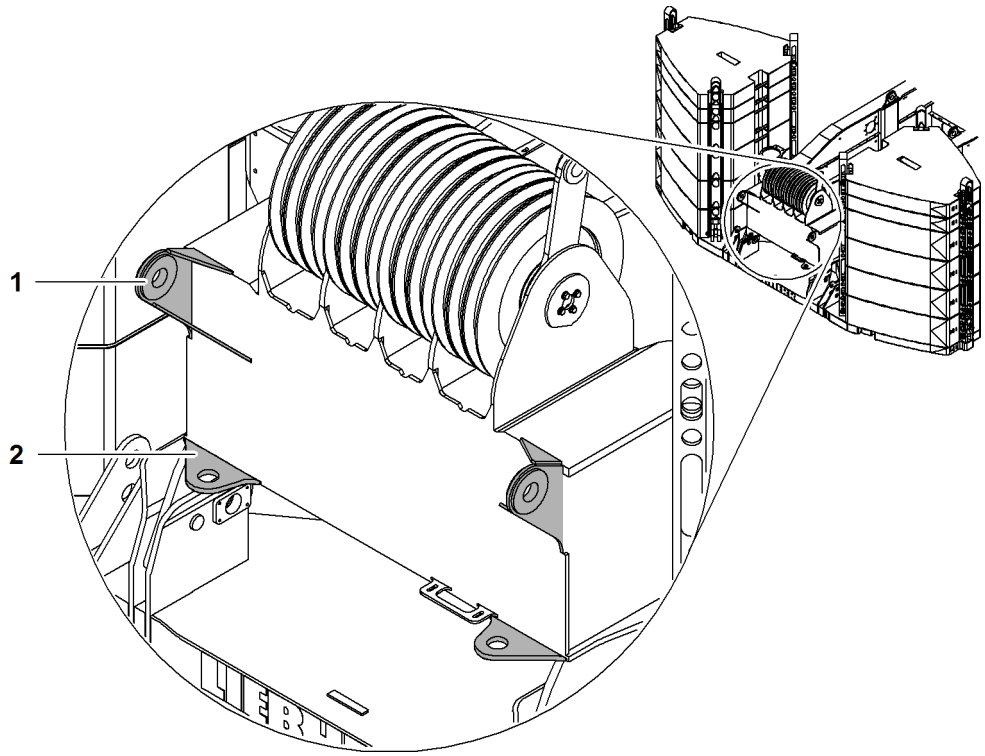

Fig. 458: Uppercarriage rear

1 Slinging plate (2x) **2** Limit stop (2x)

WARNING
Incorrect use of slinging plates!
Serious injury.
Damage to machine.

▶ Only use slinging plates to install a power pack.

▶ When installing a power pack: Contact Liebherr customer service.

WARNING
Inadmissible stress of the limit stops with tensile and vertical forces!
Serious injury.
Damage to machine.

▶ Only stress limit stop with slinging plates with compression forces.

WARNING
Inadmissible pin strength!
Serious injury.
Damage to machine.

▶ Only use pins made of 34 CrNiMo6 material.

LWN/LR.x/V03.01//Auslieferung/2015-06-03/en

copyright by
LIEBHERR

1.34 Suction flap*

The suction flap closes the suction pipe when the ignition is switched off. This prevents the undesired effect of the diesel engine 'running on'.

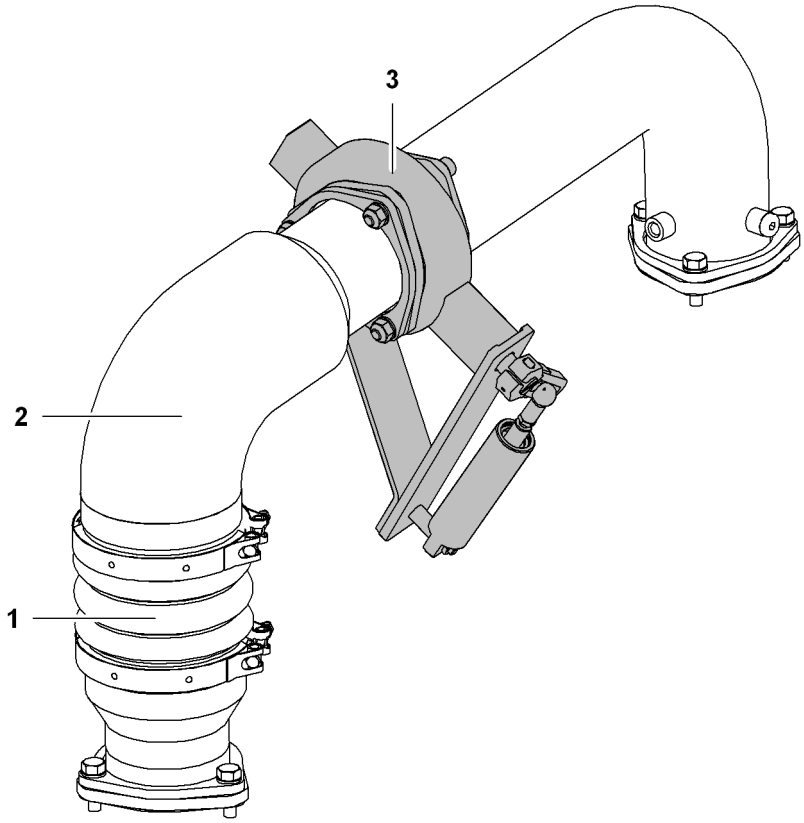

Fig. 459: Suction flap

1 Charge air hose
2 Charge air pipe
3 Shut-off device

LWN/LR.x/V03.01//Auslieferung/2015-06-03/en

copyright by
LIEBHERR

1.35 Armrests* for operator's seat

The armrests in the optional special equipment are movable and can be adjusted to match the machine operator's exact needs.

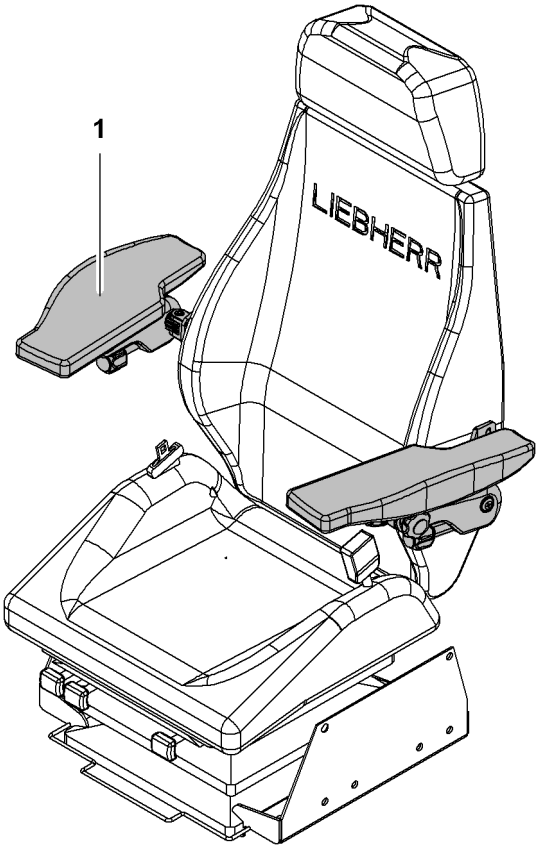

Fig. 460: Armrests for operator's seat

1 Armrests (2x)

LWN/LR.x/V03.01//Auslieferung/2015-06-03/en

1.36 Outside mirror*

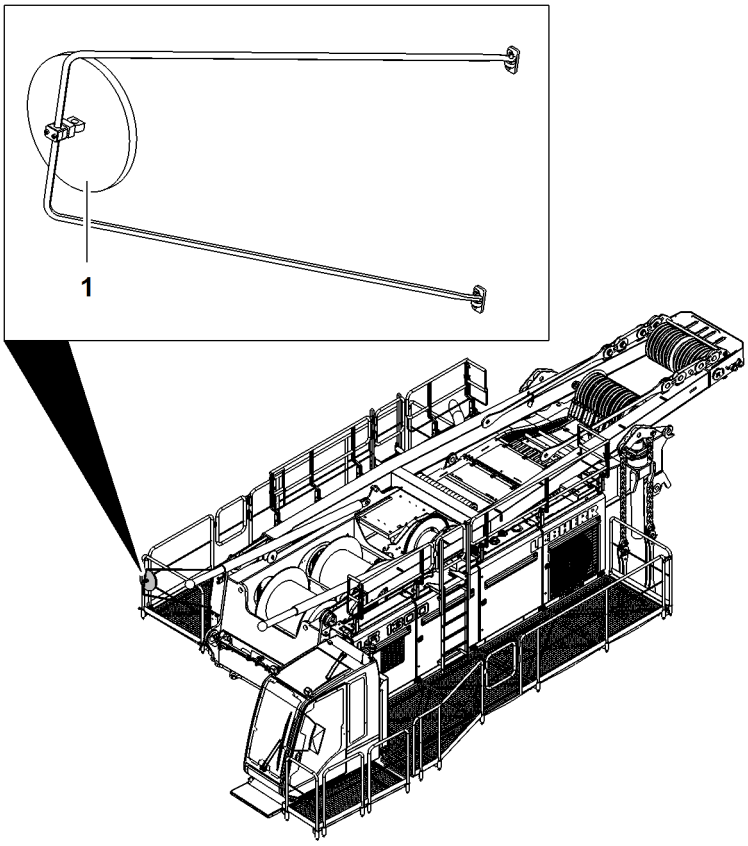

Fig. 461: Outside mirror (illustration of principle)

1 Outside mirror

The outside mirror **1** is installed on the right side of the uppercarriage.

The outside mirror **1** is folded in or deinstalled for transport.

LWN/LR.x/V03.01//Auslieferung/2015-06-03/en

copyright by
LIEBHERR

1.37 Counterweight carriage preparation unit*

In order to transport the counterweight carriage from one basic machine to another basic machine, the machine is equipped with a counterweight carriage preparation unit.

The counterweight carriage preparation unit consists of:
– Hydraulic connections and electricity connections for the rear counterweight carriage on the uppercarriage
– Control panel *X26* with mount

1.37.1 Hydraulic connections and electricity connections for the counterweight carriage

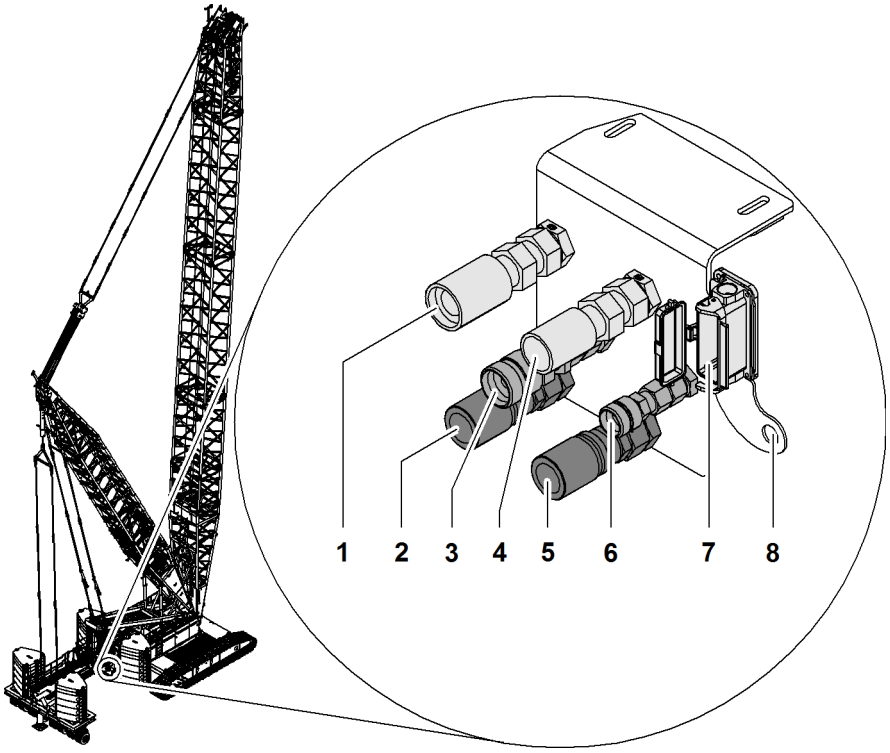

Fig. 462: Counterweight carriage preparation unit

1	Lower (red)	**5**	Leak oil (blue)
2	Leak oil (blue)	**6**	Control pressure (black)
3	High pressure (green)	**7**	Electric plug
4	Lift (yellow)	**8**	CAN bus plug

LWN/LR.x/V03.01//Auslieferung/2015-06-03/en

1.37.2 Control panel X26 and mount

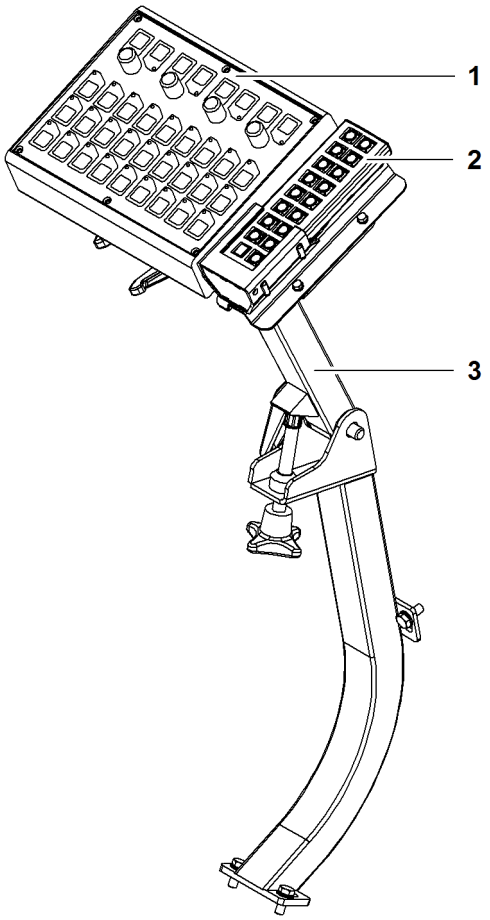

Fig. 463: Control panel X26 with mount

1 Control panel *X26*
2 Remote control panel (not part of the delivery)
3 Mount

LWN/LR.x/V03.01//Auslieferung/2015-06-03/en

copyright by
LIEBHERR

1.38 Tagline winch*

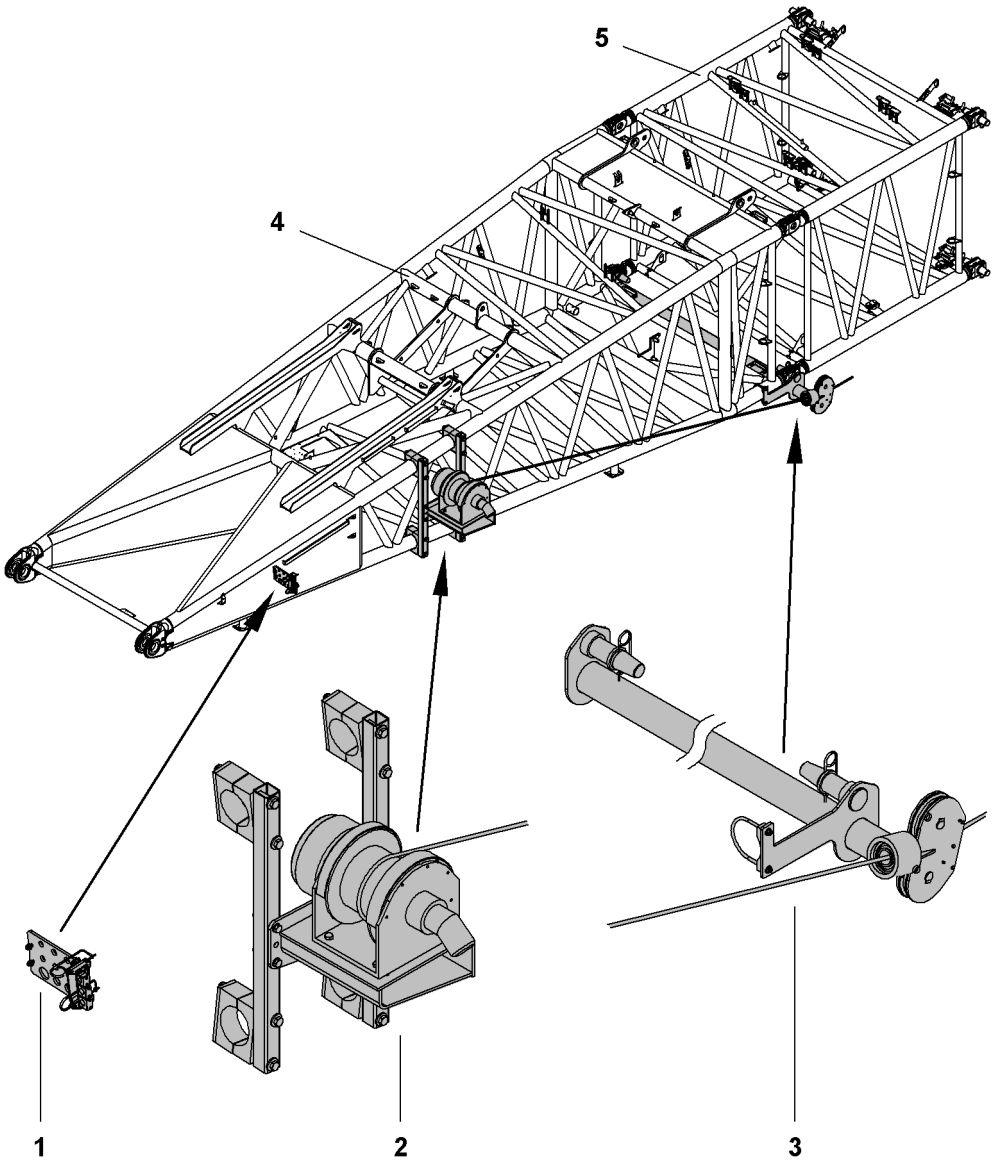

Fig. 464: Tagline winch

1 Bulkhead plate
2 Tagline winch
3 Rope bracket
4 Boom base section
5 Main boom section

The tagline winch:
– is driven by a hydraulic motor via a planetary gearbox.
– is equipped with a fixed-caliper disc brake.

The tagline is attached to the rigging material with an adjustable pull force. The tagline winch **2** dampens the swinging movements of the rigging material by winding and unwinding the tagline.

The rotatable rope bracket **3** prevents the tagline from being damaged if the rope runs unevenly.

LWN/LR.x/V03.01//Auslieferung/2015-06-03/en

copyright by
LIEBHERR

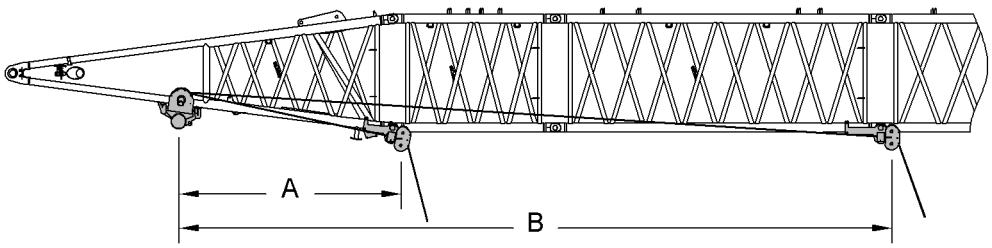

Fig. 465: Assembly position of the rope bracket (schematic diagram)

A Minimum distance **B** Maximum distance

Because of the special way the winch unwinds, there is a minimum distance **A** of 3700 mm (12‘ 2“ ft-in) and a maximum distance **B** of 13000 mm (42‘ 8“ ft-in) between the winch and rope bracket.

The rope bracket may be mounted in the following positions:
– after the boom base section
– after the 3 m (10 ft) boom section
– after the first 6 m (20 ft) boom section
– after the 3 m (10 ft) boom section and the first 6 m (20 ft) boom section

Name	Winch with one caliper	Winch with two calipers
Maximum winch line pull	15 kN 3,370 lb_f	28 kN 6,290 lb_f
Minimum constant tension	2 kN 450 lb_f	2 kN 450 lb_f
Rope ∅	14 mm 0.55“ in	14 mm 0.55“ in
Drum ∅	270 mm 10.63“ in	270 mm 10.63“ in
Maximum rope speed (full load)	110 m/min 360‘ 11“ ft-in/min	110 m/min 360‘ 11“ ft-in/min
Maximum rope speed (empty hook)	124 m/min 406‘ 10“ ft-in/min	124 m/min 406‘ 10“ ft-in/min
Rope length	80 m 262‘ 6“ ft-in	80 m 262‘ 6“ ft-in

Tab. 282: Technical data tagline winch

LWN/LR.x/V03.01//Auslieferung/2015-06-03/en

copyright by LIEBHERR

1.39 Refueling pump*

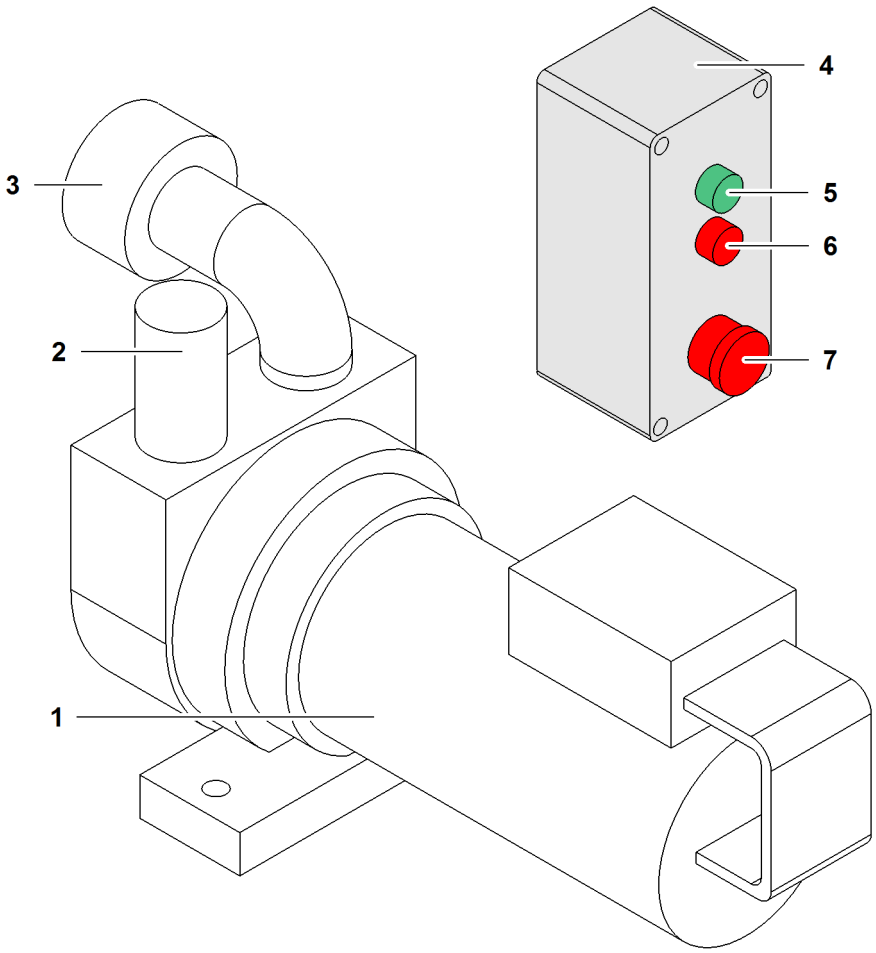

Fig. 466: Refuelling pump

1 Motor
2 Supply line to fuel tank
3 Connection for suction hose
4 Control panel
5 *"Pump on"* button (green)
6 *"Pump off"* button (red)
7 Emergency stop

The refueling pump is fitted to the right-hand side of the uppercarriage, next to the fuel tank.

Designation	Value
Suction height	max. 4 m (13‘ 1“ ft-in)
Delivery rate	50 l/min 13.21 gal/min
Operating time	max. 20 min (20 min)
Idling time	max. 30 s (30 sec)

Tab. 283: Refueling pump technical data

LWN/LR.x/V03.01//Auslieferung/2015-06-03/en

copyright by
LIEBHERR

1.40 Cab roof protection guard*

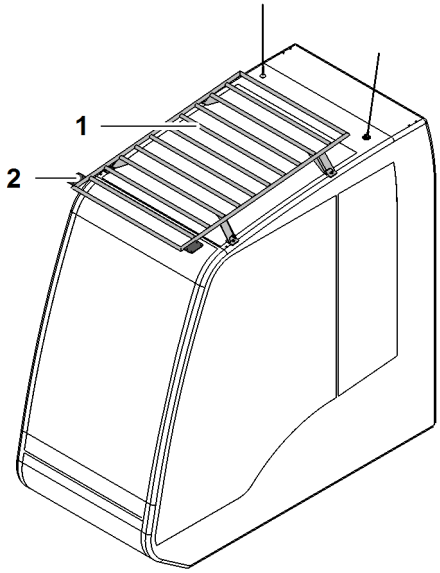

Fig. 467: Cab roof protection guard

1 Cab roof protection guard **2** Mountings (2x) for floodlights

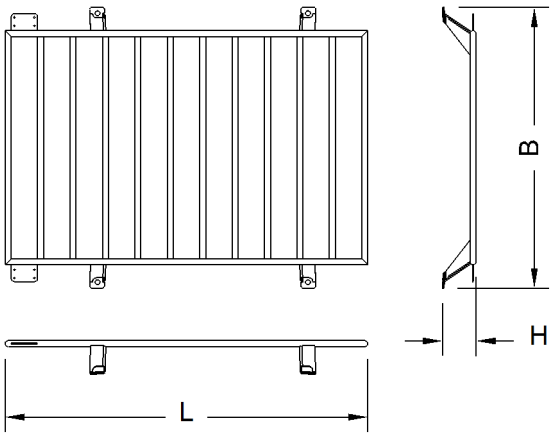

Fig. 468: Dimensions of cab roof protection guard

Designation		Value
L	Length	1208 mm 4‘ ft-in
B	Width	936 mm 3‘ 1“ ft-in
H	Height	112 mm 4.41“ in
Weight		30 kg 66.14 lb

Tab. 284: Technical data: cab roof protection guard

LWN/LR.x/V03.01//Auslieferung/2015-06-03/en

copyright by
LIEBHERR

1.41 Derrick preparation unit

In order to transport the derrick from one basic machine to another basic machine, the machine is equipped with a derrick preparation unit.

The derrick preparation unit consists of hydraulic connections and electricity connections for the derrick.

The connections are located on the front right of the uppercarriage.

1.41.1 Hydraulic connections and electricity connections for the derrick

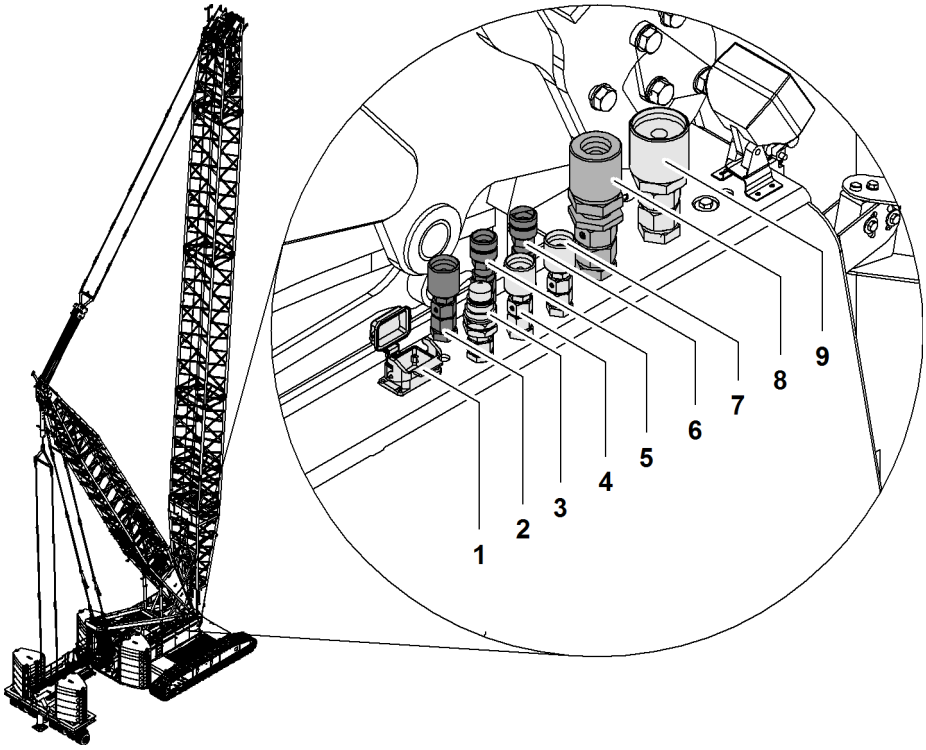

Fig. 469: Derrick preparation unit

1 Electric plug
2 Feed pressure
3 Leakage oil
4 Derrick tilting-back supports (red)
5 Derrick tilting-back supports (red)
6 Lift derrick hoist cylinder (green)
7 Lower derrick hoist cylinder (green)
8 Lower derrick winch
9 Lift derrick winch

LWN/LR.x/V03.01//Auslieferung/2015-06-03/en

copyright by
LIEBHERR

1.42 Lightning rods*

The lightning rods facilitate directed conduction of lightning flashes through the steel structure of the machine.

Depending on the machine configuration, the lightning rods are installed in the following positions:
– Main boom head
– Jib head
– A-frame2
– A-frame3
– Derrick boom head

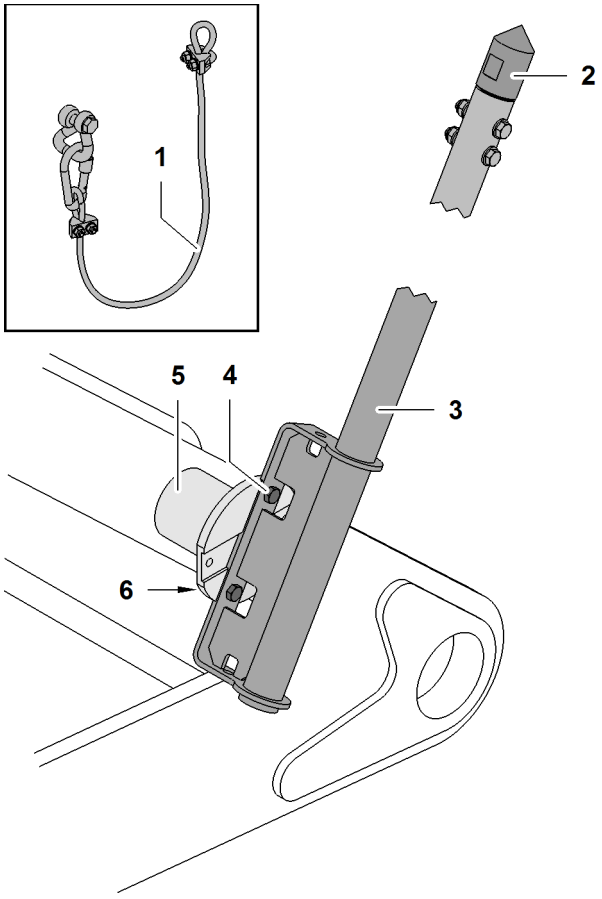

Fig. 470: Lightning rod

1	Safety rope with shackle and carabiner	**4**	Screw (2x)
2	Tip	**5**	Mounting plate
3	Lightning rod	**6**	Nut (2x)

The lightning rod **3** is attached with screws **4** on the mounting plate **5** and locked with nuts **6**.

The safety rope **1** prevents dropping of the lightning rod **3**.

The tip **2** is made of bronze.

LWN/LR.x/V03.01//Auslieferung/2015-06-03/en

copyright by
LIEBHERR

1.43 External power supply*

The external supply is required for the following components:
– Obstacle warning light
– Cold weather kit

A power unit may also ensure external supply.

1.43.1 External power supply obstacle warning light

The role of the external power supply is to charge, trickle charge or support the batteries when the machine is switched off. The supply voltage is 230 V or 115 V.

The “external power supply obstacle warning light” operates the obstacle warning light (For more information see: 1.49 Obstacle warning light*, page 447) .

NOTICE
Main battery switch is OFF, batteries will not be charged!
Damage to batteries.

▶ Do not turn off the battery main switch whilst charging is in progress.

The obstacle warning light is supplied with power via the batteries and the generator of the machine. With the “external power supply obstacle warning light”, the obstacle warning light can be operated overnight when the ignition is off as well as over longer periods, e.g. during the weekend.

LWN/LR.x/V03.01//Auslieferung/2015-06-03/en

copyright by
LIEBHERR

Supply

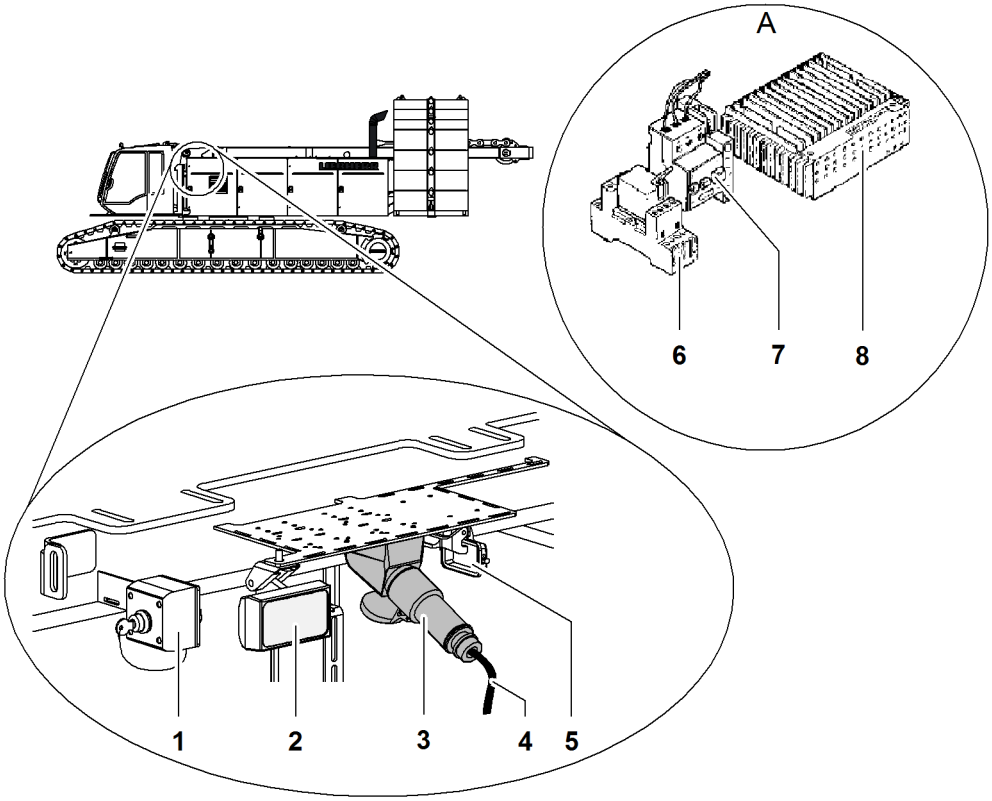

Fig. 471: External power supply

1	Key switch *load moment limiter shut-down*	**5**	Anschlussstecker des Bedienpults Notbetriebssteuerung
2	Floodlight	**6**	Circuit breaker
3	External supply connection plug	**7**	Engine protection switch
4	Mains cable	**8**	Charger

Detail **A** is located in the switching cabinet behind the cabin.

Charger

Name	Value
Nominal voltage	115/230 V, 50/60 Hz
Output voltage	28.8 V / 27.6 V
Maximum output current	25 A

Tab. 285: Technical data charger

LWN/LR.x/V03.01//Auslieferung/2015-06-03/en

copyright by
LIEBHERR

Power cable

WARNING
Faulty power cable!
risk of electric shock.

- ▶ Arrange for a qualified electrician to manufacture the mains cable.
- ▶ Make sure that the power cable complies with national safety regulations.
- ▶ Make sure that the power cable is suitable for use on a construction site.

WARNING
Damaged mains cable!
Electric shock.

- ▶ Make sure that the mains cable is installed in such a way that no damage occurs.

The requisite mains cable for external connection is not supplied with the machine. A matching plug is situated in the outlet in the uppercarriage.

Mains cable:
– One phase
– One neutral conductor
– One protective conductor

1.43.2 External supply low temperature package

The external supply serves to charge, trickle-charge or support the batteries. Some components of the cold weather kit are supplied directly. The supply voltage is 3 x 230 V.

The “external cold weather kit supply” operates the following:
– Obstacle warning light (For more information see: 1.49 Obstacle warning light*, page 447)
– Low temperature package
– Socket in cabin (For more information see: 1.67 Socket* in cab, page 490)

NOTICE
Main battery switch is OFF, batteries will not be charged!
Damage to batteries.

- ▶ Do not turn off the battery main switch whilst charging is in progress.

The obstacle warning light and the auxiliary heating are supplied with power via the batteries and the generator of the machine. With the “external power supply low temperature package”, the obstacle warning light and the auxiliary heating can be operated overnight when the ignition is off and even for longer periods, e.g. over weekends.

The socket in the cabin and other components of the low temperature package (e.g. engine pre-heater, ...) are only supplied with power if the “external supply low temperature package” is plugged in.

LWN/LR.x/V03.01/Auslieferung/2015-06-03/en

copyright by
LIEBHERR

Supply

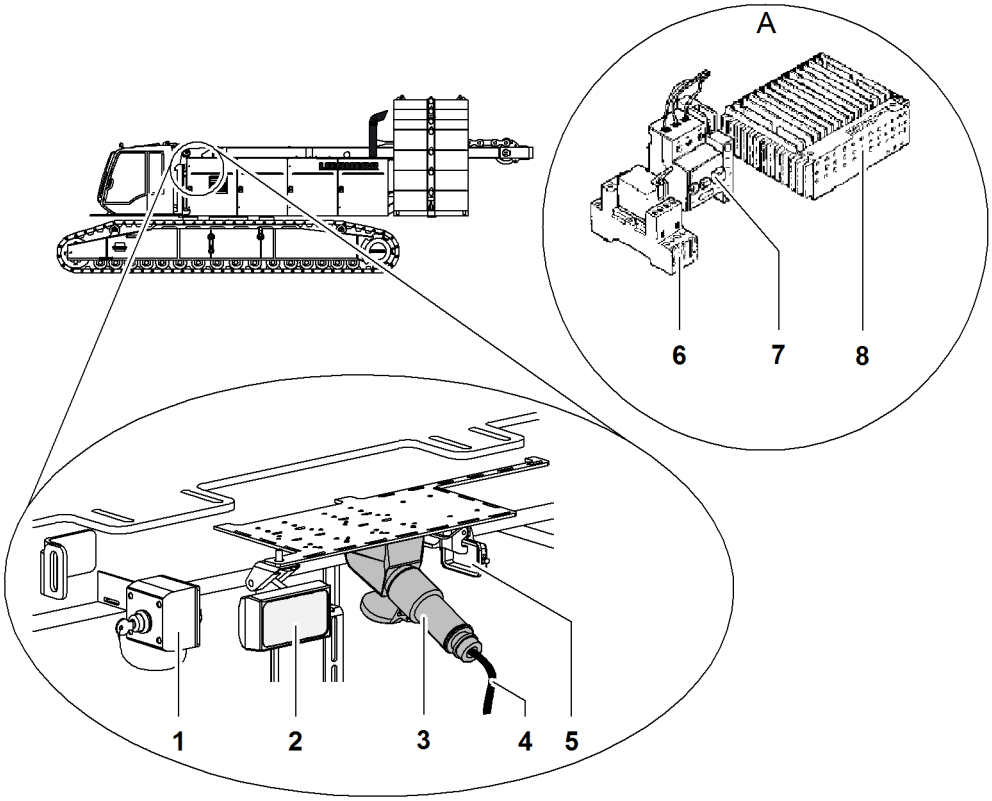

Fig. 472: External power supply

1	Key switch *load moment limiter shut-down*	**5**	Control panel emergency control system connection plug
2	Floodlight	**6**	Circuit breaker
3	External supply connection plug	**7**	Engine protection switch
4	Mains cable	**8**	Charger

Detail **A** is located in the switching cabinet behind the cabin.

Charger

Name	Value
Nominal voltage	115/230 V, 50/60 Hz
Output voltage	28.8 V / 27.6 V
Maximum output current	25 A

Tab. 286: Technical data charger

LWN/LR.x/V03.01//Auslieferung/2015-06-03/en

copyright by
LIEBHERR

Mains cable

WARNING
Faulty mains cable!
Electric shock.

- ▶ Arrange for a qualified electrician to manufacture the mains cable.
- ▶ Make sure that the mains cable complies with national safety regulations.
- ▶ Make sure that the mains cable is suitable for use on a construction site.

WARNING
Damaged mains cable!
Electric shock.

- ▶ Make sure that the mains cable is installed in such a way that no damage occurs.

The requisite mains cable for external connection is not supplied with the machine. A matching plug is situated in the outlet in the uppercarriage.

Mains cable:
– Three phases
– One neutral conductor
– One protective conductor

LWN/LR.x/V03.01//Auslieferung/2015-06-03/en

copyright by
LIEBHERR

1.44 Radio remote control*

The radio transmitter is manufactured in conformance with regulations and rules laid down by BGV D6 for cranes, ZH 1/547 “Directives for operating cranes by remote control” and DIN EN 13557. The radio transmitter conforms to EMC guidelines and meets the relevant standards regarding emitted interference and interference immunity in industry.

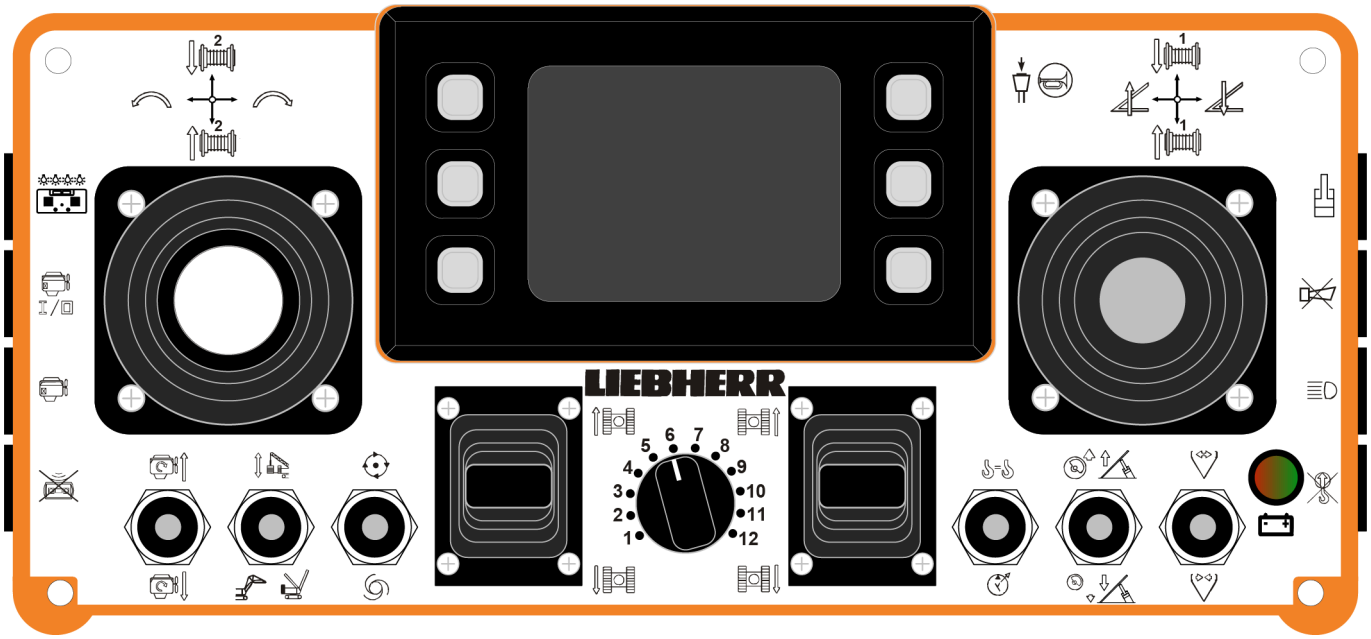

Fig. 473: Radio remote control (view from top)

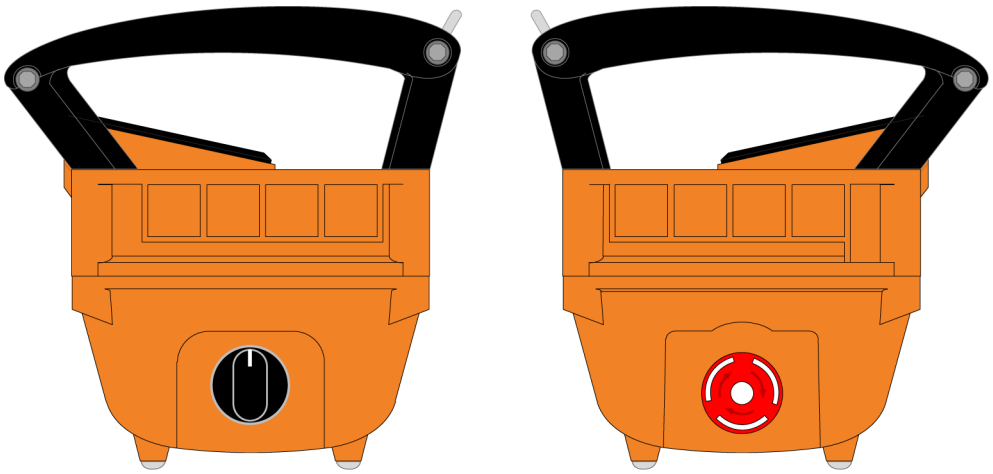

Fig. 474: Radio remote control (view from side)

Name	Value
Length	358 mm 1‘ 2“ ft-in
Width	182 mm 7.17“ in

LWN/LR.x/V03.01//Auslieferung/2015-06-03/en

copyright by
LIEBHERR

Name	Value
Height	178 mm 7.01“ in
Frequency range	1790 MHz (1790 MHz) to 1930 MHz (1930 MHz)
Transmission power	< 10 mW
Operating temperature	-20 °C (-4 °F) to 70 °C (158 °F)
Battery charging time	maximum 4 hours
Operating time	approx. 9 hours in constant operation
Weight	3 kg 6.61 lb

Tab. 287: Technical data radio remote control

Name	Value
Length	270 mm 10.63“ in
Width	160 mm 6.30“ in
Height	115 mm 4.53“ in
Operating temperature	-20 °C (-4 °F) to 70 °C (158 °F)
Weight	3.5 kg 7.72 lb

Tab. 288: Technical data receiver module (radio receiver on machine)

Name	Value
Length	42 mm 1.65“ in
Width	140 mm 5.51“ in
Height	186 mm 7.32“ in
Weight	0.85 kg 1.87 lb
Operating voltage	100 V to 240 V
Power consumption	12 W
Output voltage	< 10 V
Output current	0.4 A

LWN/LR.x/V03.01//Auslieferung/2015-06-03/en

copyright by
LIEBHERR

Name	Value
Compatible batteries	NiCd batteries type FuB 10 AA and FuB 10 XL
	NiMh batteries type BA214061

Tab. 289: Technical data battery charger

LWN/LR.x/V03.01//Auslieferung/2015-06-03/en

copyright by
LIEBHERR

1.45 Foot pedal adjuster*

The foot pedal adjuster* ensures the optimum position of the foot pedals for the respective machine operator.

Additional foot pedal plates are mounted on the foot pedal *Brake free-fall winch1* and the foot pedal *Brake free-fall winch2*.

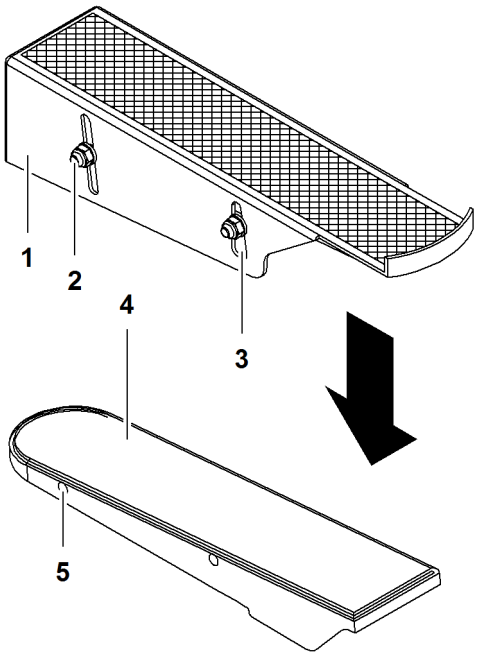

*Fig. 475: Foot pedal adjuster**

1 Foot pedal plate
2 Screw (2x)
3 Longitudinal hole (2x)
4 Foot pedal
5 Boring (2) for screw

The height and inclination of the foot pedals can be adjusted with the screws **2** in the longitudinal holes **3**.

LWN/LR.x/V03.01//Auslieferung/2015-06-03/en

copyright by
LIEBHERR

1.46 GSM/GPRS/GPS modem

A GSM/GPRS/GPS modem is connected to the Litronic control system.

The modem is located in switching cabinet X1. This enables the latest operating data, position data and the stored machine data to be transmitted to Liebherr after sales service.

Subject to certain conditions, Liebherr after sales service can use a diagnostic system to determine the reasons behind faults, to prepare accordingly for engineers to attend and to organize the spare parts supply quickly and efficiently.

Name	Value
Frequency	850 MHz (850 MHz), 900 MHz (900 MHz), 1800 MHz (1800 MHz), 1900 MHz (1900 MHz)
Nominal voltage	6.5 V (6.5 V) to 48 V (48 V)

Tab. 290: Technical data for GSM/GPRS/GPS modem

LWN/LR.x/V03.01//Auslieferung/2015-06-03/en

copyright by
LIEBHERR

1.47 Hook fixing point *

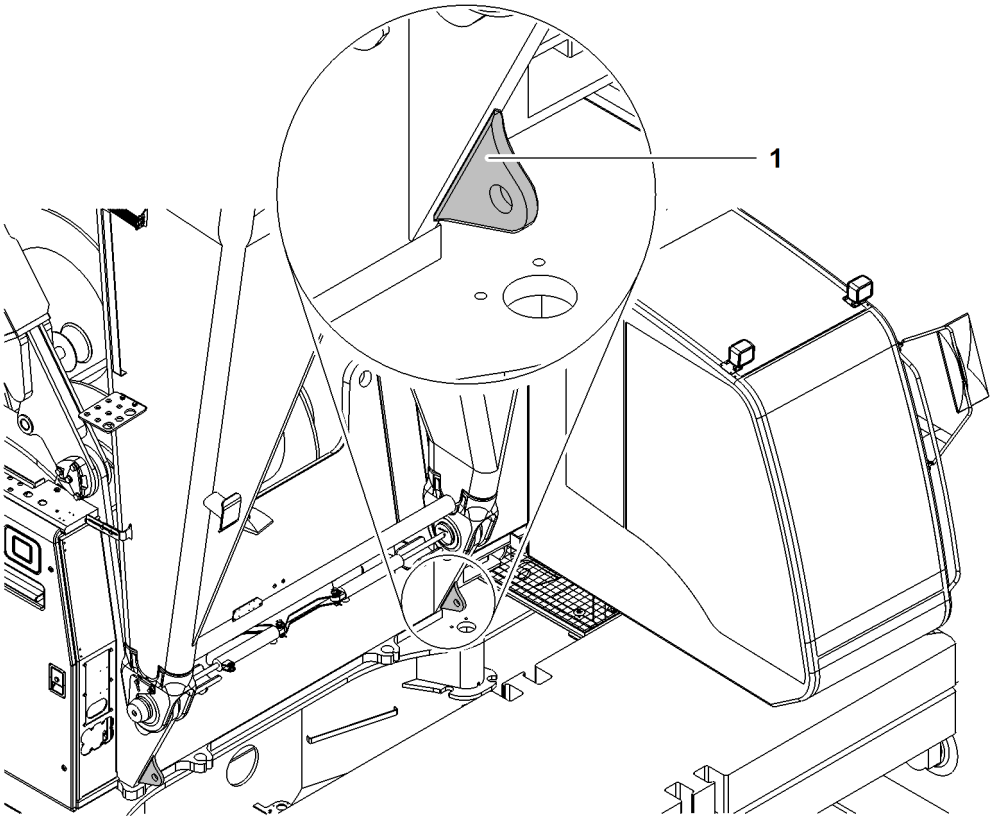

Fig. 476: Hook fixing point (illustration of principle)

1 Link (2x)

NOTICE
Inadmissible use of hook fixing point links **1**!
Damage to the uppercarriage.

▶ Only use links **1** as hook fixing point.

WARNING
Incorrect procedure when using the hook fixing point!
Severe injuries through rope rupture, damage to the structure.

▶ Hook fixing point must exclusively be used in parked positions.

▶ Only attach hook with stay rope on link plates **1**.

LWN/LR.x/V03.01//Auslieferung/2015-06-03/en

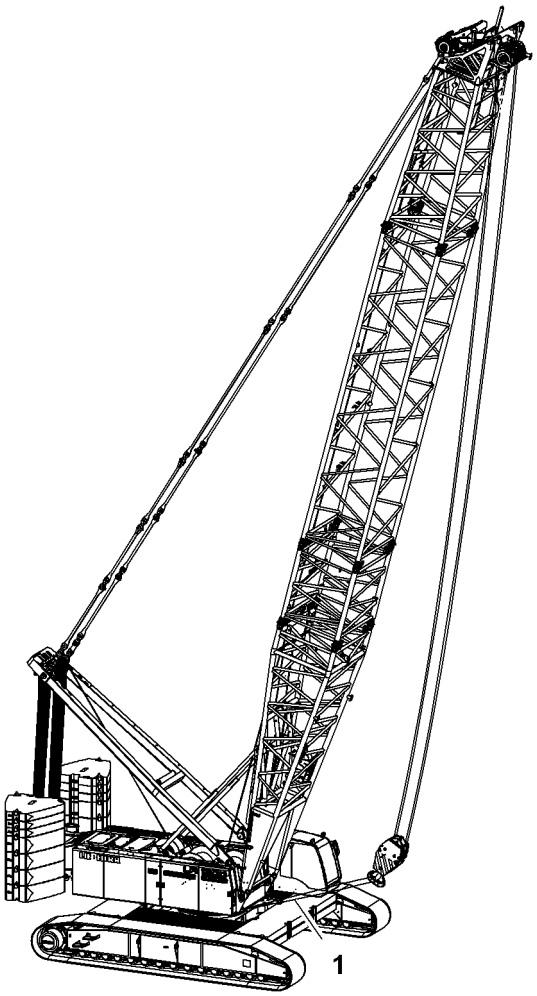

Fig. 477: Hook fixing point (illustration of principle)

1 Safety retaining rope

LWN/LR.x/V03.01//Auslieferung/2015-06-03/en

copyright by
LIEBHERR

1.48 Handrail* / wide steps*

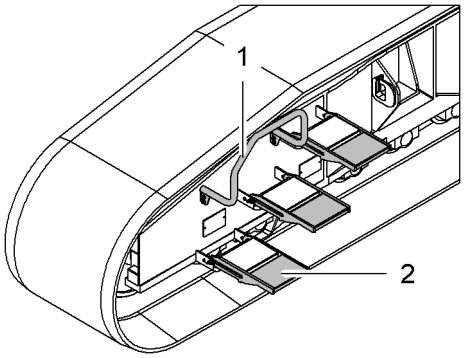

Fig. 478: Handrail / wide steps

1 handrail **2** Wide steps

The handrail **1** and the wide steps **2** allow personnel to climb onto the crawler side frame more easily.

LWN/LR.x/V03.01//Auslieferung/2015-06-03/en

copyright by
LIEBHERR

1.49 Obstacle warning light*

Note
Use of the obstacle warning light is prescribed by national or regional regulations!

▶ Before using the machine, familiarise yourself with national and local regulations.

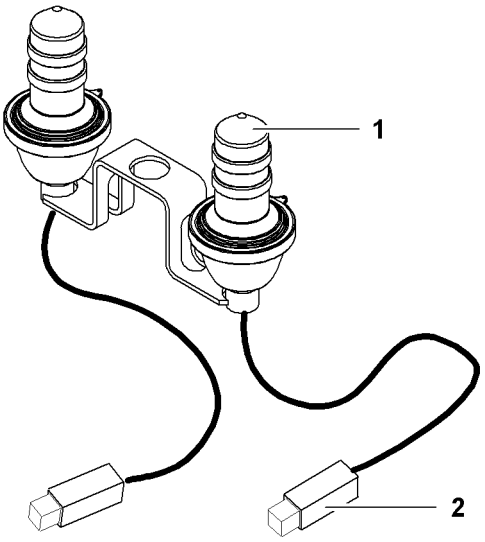

Fig. 479: Obstacle warning light

1 Obstacle warning light (2x) **2** Plug (2x)

The obstacle warning light:
– is installed on the main boom head section.
– is installed on the jib head section with attached jib.
– is attached onto the same fixture as the anemometer.
– is lit when the button *Obstacle warning light* is activated.
– lights up if an external power supply is connected.

LWN/LR.x/V03.01//Auslieferung/2015-06-03/en

copyright by
LIEBHERR

1.50 Third hoist limit switch*

If a third rope is guided across a main boom or jib head section (e.g. auxiliary winch on main boom base section), the third hoist limit switch is required.

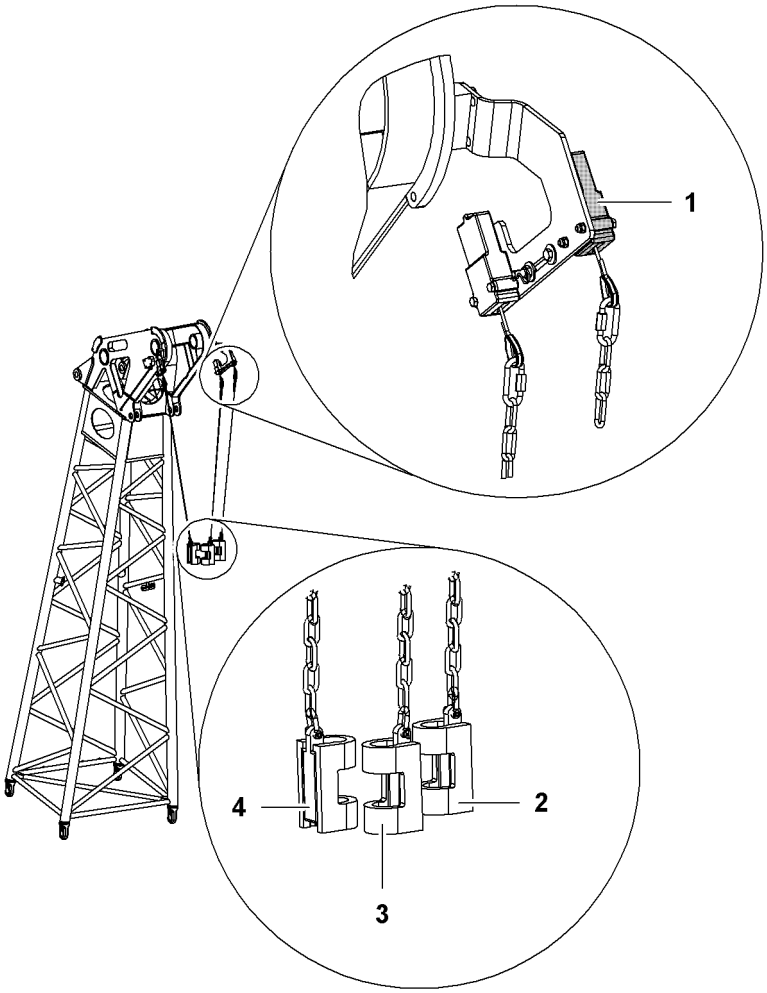

Fig. 480: Third hoist limit switch

1	Hoist limit switches (2x)	**3**	Hoist limit switch weight auxiliary winch
2	Hoist limit switch weight winch1	**4**	Hoist limit switch weight winch2

LWN/LR.x/V03.01//Auslieferung/2015-06-03/en

1.51 Hydraulic cab elevation*

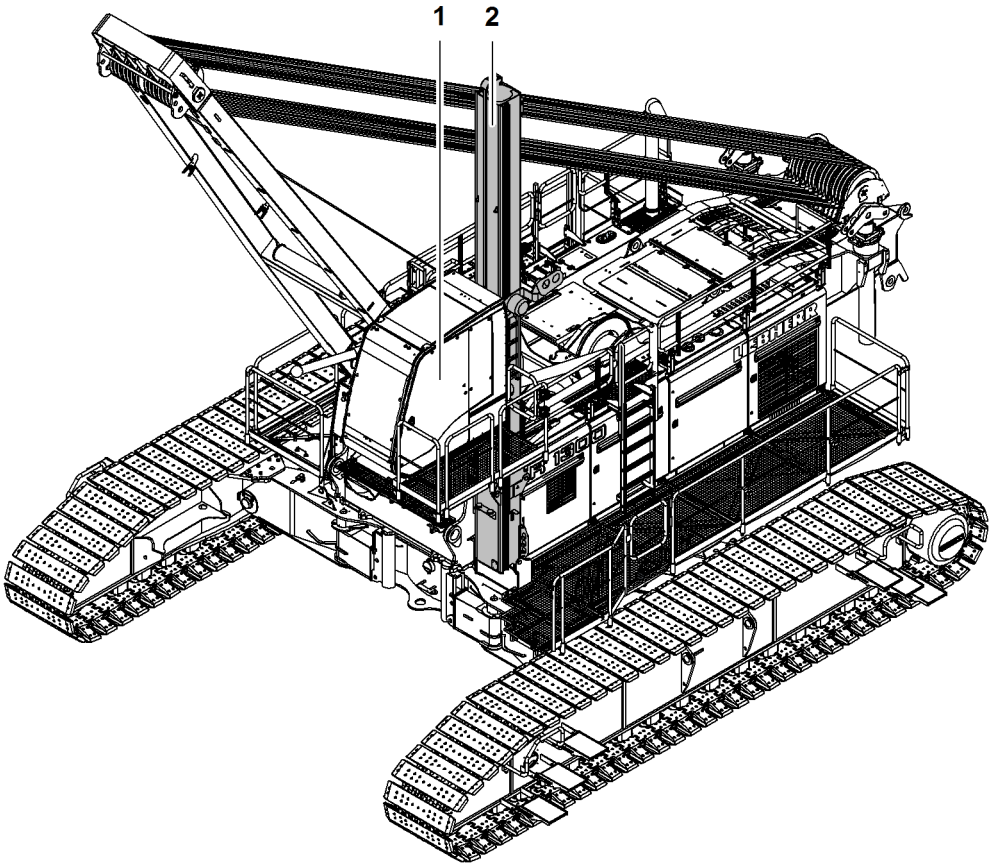

Fig. 481: Hydraulic cabin elevation (illustration of principle)

1 Cabin **2** Mast

The hydraulic cabin elevation allows continuous, vertical adjustment of the cabin **1**.

LWN/LR.x/V03.01//Auslieferung/2015-06-03/en

copyright by
LIEBHERR

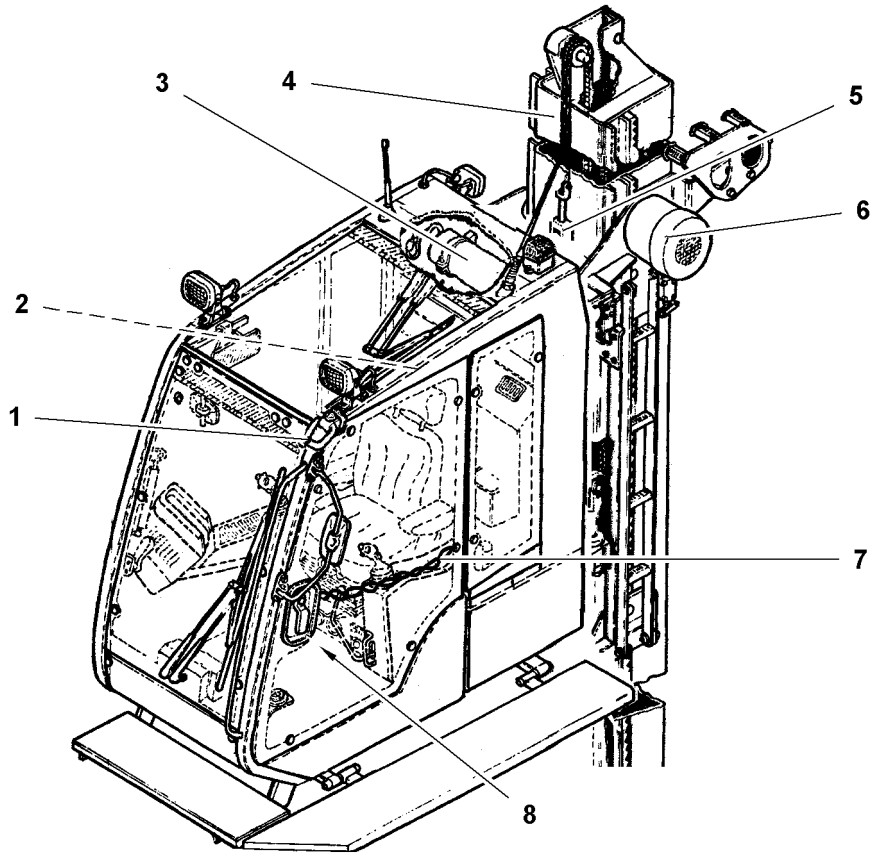

Fig. 482: Hydraulic cabin elevation - detail

1	Suspension point for emergency descent rescue equipment	**5**	Chain
2	Suspension point for emergency descent rescue equipment (with installed cabin roof protection guard)	**6**	Overrun brake
3	Abseil rescue equipment	**7**	Safety chain
4	Mast	**8**	Operating elements for the cab elevation system

Name	Value
Maximum adjusting height	6 m 19‘ 8“ ft-in
Lifting speed of cabin	8 m/min 26‘ 3“ ft-in/min
Lowering speed of cabin	11 m/min 36‘ 1“ ft-in/min
Fall arrester responds at rate of fall	0.69 m/s 2.26 ft/s
Lowering speed of cabin during emergency lowering	4.5 m/min 14‘ 9“ ft-in/min

Tab. 291: Technical data hydraulic cabin elevation

LWN/LR.x/V03.01//Auslieferung/2015-06-03/en

copyright by
LIEBHERR

1.52 Cabin railing*

The cabin railing consists of the following components:
– Front cabin railing
– Rear cabin railing
– Brackets on platform
– Brackets below cabin

The cabin railing serves as fall arrest and ascension aid.

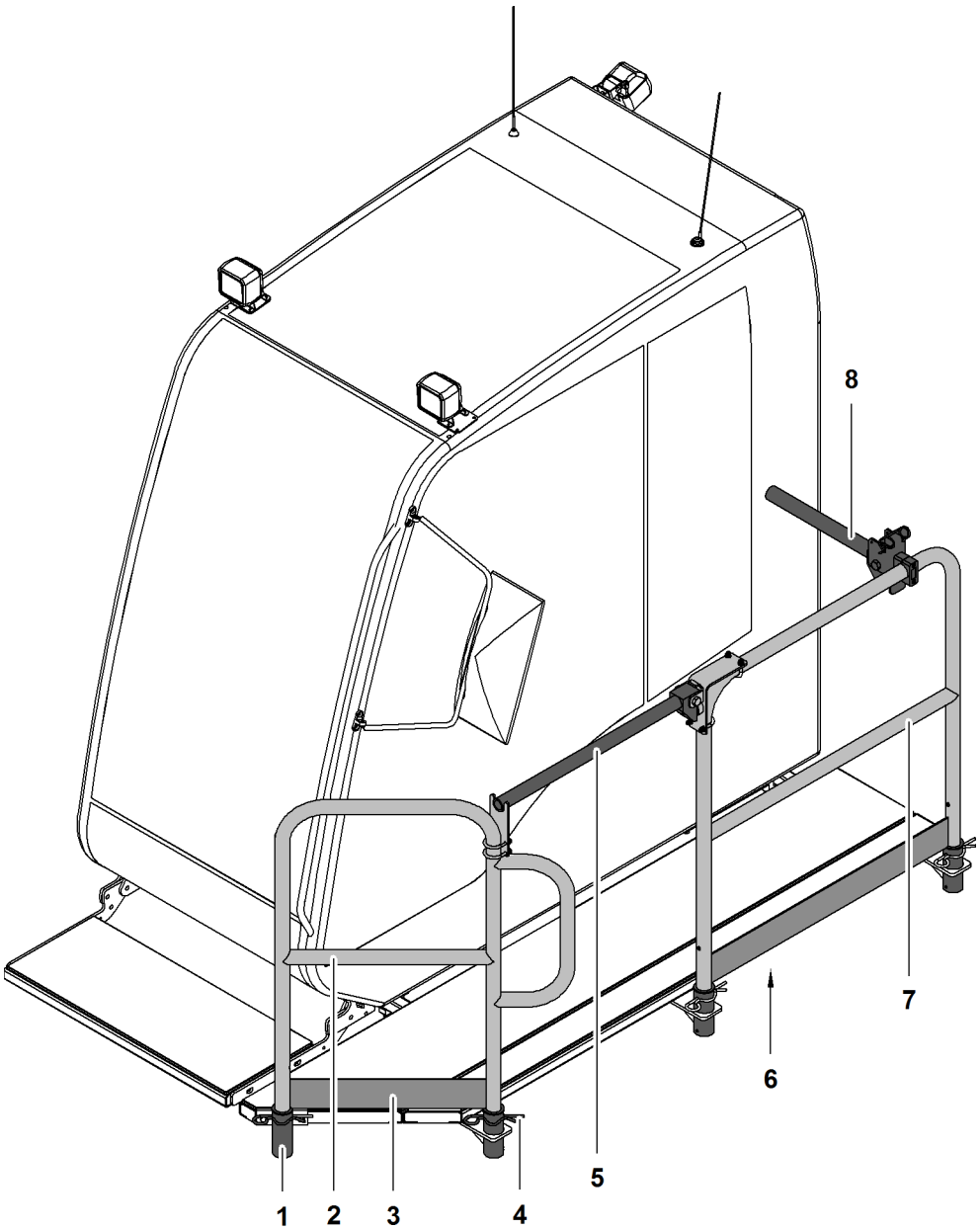

Fig. 483: Cabin railing

1	Bracket (4x)	**5**	Chopper bar
2	Front cabin railing	**6**	Bracket below cabin (2x)
3	Foot board (2x)	**7**	Rear cabin railing
4	Spring cotter pin (4x)	**8**	Chopper bar

LWN/LR.x/V03.01//Auslieferung/2015-06-03/en

copyright by
LIEBHERR

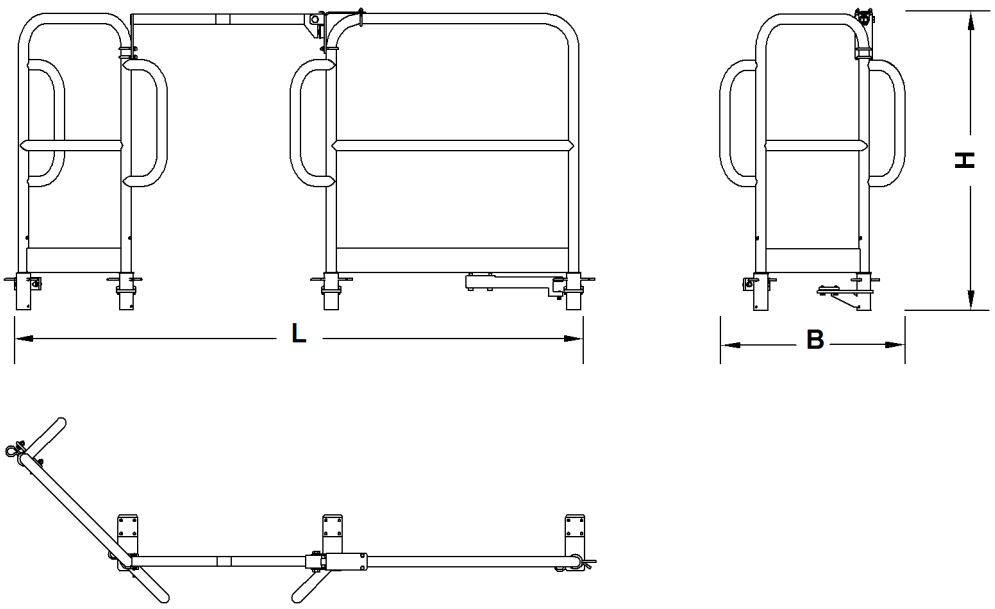

Fig. 484: Cabin railing

Name		Value
L	Length	2347 mm 7‘ 8“ ft-in
W	Width	764 mm 2‘ 6“ ft-in
H	Height	1237 mm 4‘ 1“ ft-in
Weight		55 kg 121 lb

Tab. 292: Technical data cabin railing

LWN/LR.x/V03.01//Auslieferung/2015-06-03/en

1.53 Cable remote control

The cable remote control serves to control the counterweight hoisting cylinders, jacks, track width adjusting cylinders, and pin connection cylinders of the hydraulic pin connection of the main boom base section.

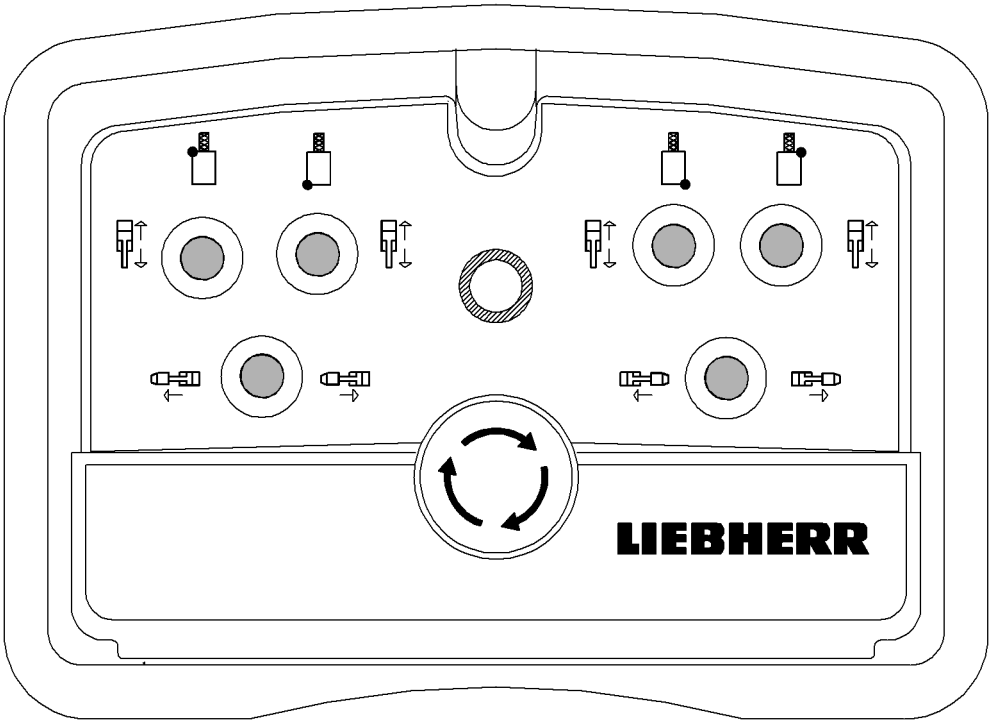

Fig. 485: Cable remote control

The continuation of the electric cable with its connector is not shown.

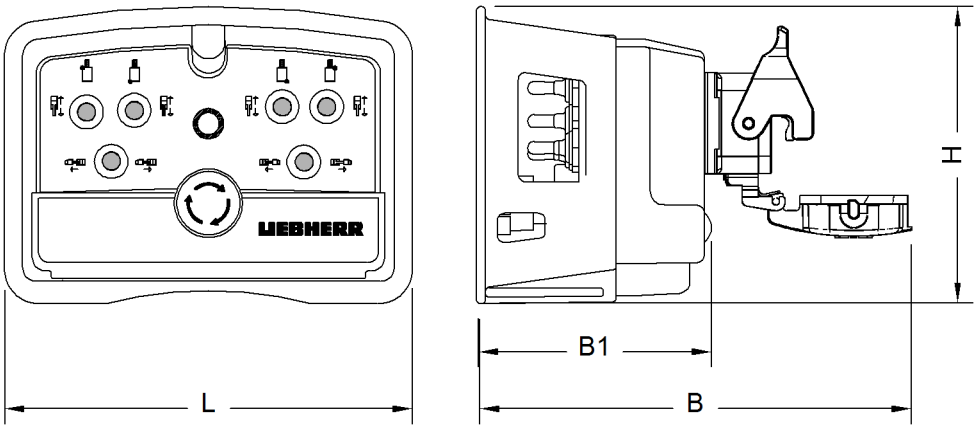

Fig. 486: Dimensions cable remote control

Name		Value
L	Length	175 mm 6.89“ in

LWN/LR.x/V03.01//Auslieferung/2015-06-03/en

copyright by
LIEBHERR

Name		Value
B	Width	184 mm 7.24“ in
B1	Width	99 mm 3.90“ in
H	Height	127 mm 5.00“ in
Weight (without electric cable)		1 kg 2.20 lb

Tab. 293: Technical data cable remote control

LWN/LR.x/V03.01//Auslieferung/2015-06-03/en

copyright by
LIEBHERR

1.54 Ventilation, heating and air-conditioning

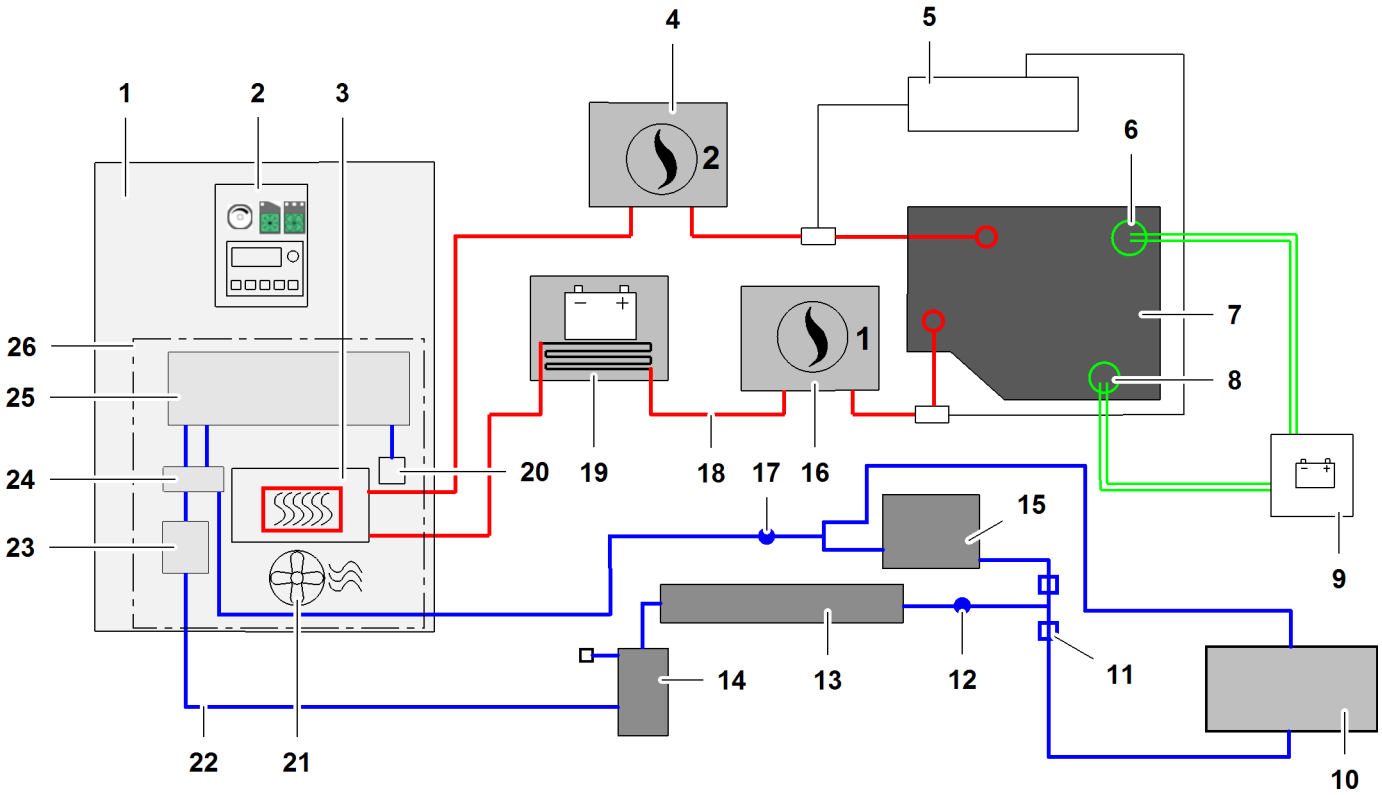

Fig. 487: Ventilation, heating and air-conditioning (illustration of principle)

1	Cabin	**10**	External air conditioning system*	**19**	Battery heating*
2	Operating elements in cabin	**11**	Non-return valve (2x)	**20**	Thermostat
3	Heat exchanger in climatic box	**12**	Filling coupling (high pressure)	**21**	Blower
4	Auxiliary water heating*	**13**	Condenser	**22**	Cooling circuit (shown in blue)
5	Urea tank	**14**	Dryer	**23**	Solenoid valve
6	Diesel engine coolant heating*	**15**	A/C compressor	**24**	Expansion valve
7	Diesel engine	**16**	Auxiliary water heating*	**25**	Evaporator
8	Diesel engine lubrication oil heating*	**17**	Filling coupling (low pressure)	**26**	Climatic box
9	Switch cabinet *X1*	**18**	Heating circuit (shown in red)		

LWN/LR.x/V03.01//Auslieferung/2015-06-03/en

copyright by
LIEBHERR

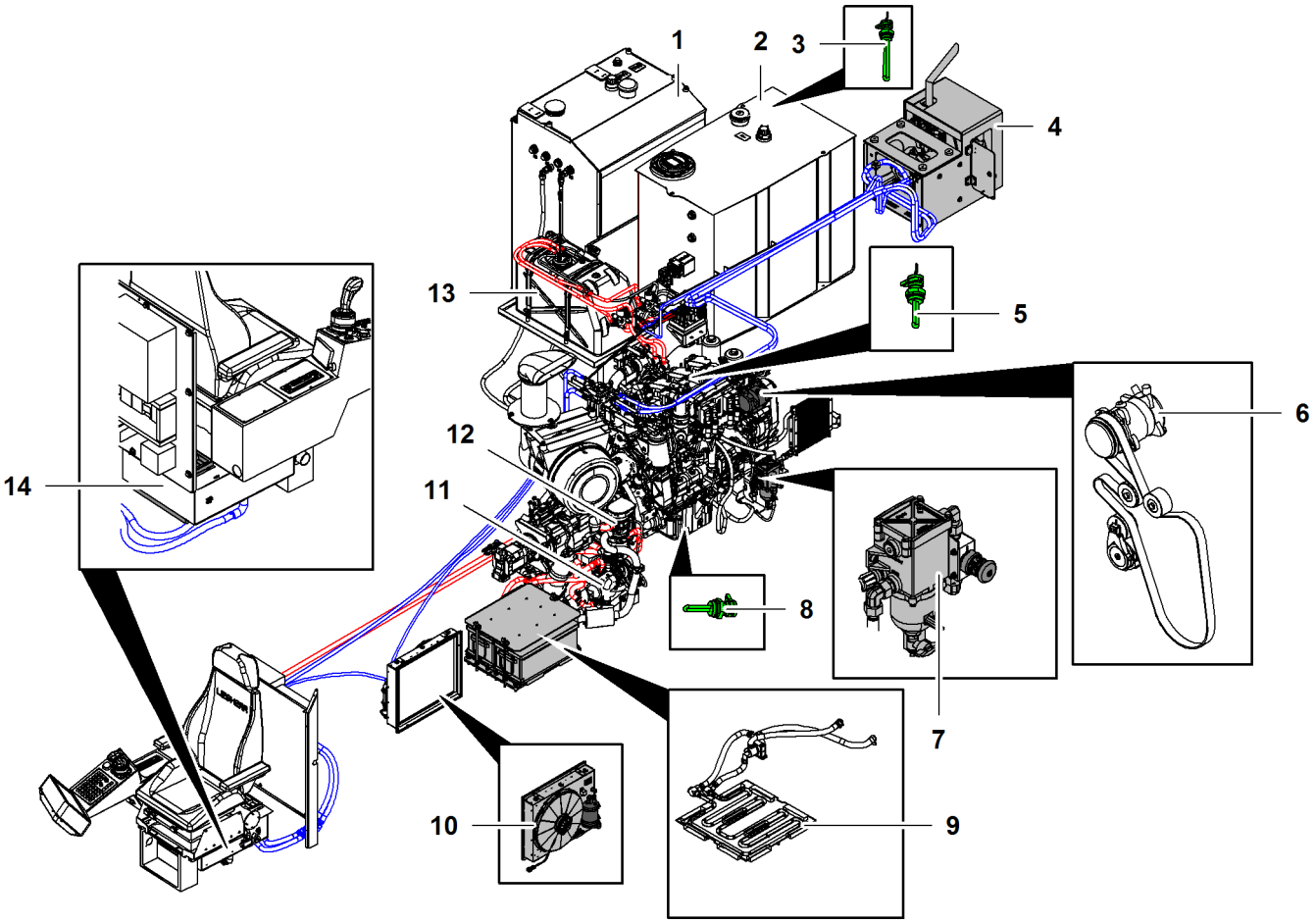

Fig. 488: Installation situation ventilation, heating and air-conditioning (illustration of principle)

1	Fuel tank	**6**	A/C compressor	**11**	Auxiliary water heating*
2	Hydraulic oil tank	**7**	Fuel pre-filter heating	**12**	Auxiliary water heating*
3	Immersion heater of hydraulic oil tank heating*	**8**	Immersion heater of diesel engine lubrication oil heating*	**13**	Urea tank
4	External air conditioning system*	**9**	Battery heating*	**14**	Climatic box
5	Immersion heater of diesel engine coolant heating*	**10**	Condenser		

The components may be installed individually or in groups.

1.54.1 Cooling circuit

The air conditioning system is combined with the heating and ventilation systems of the operator's cabin. The heating and air conditioning system only work when the diesel engine is running.

The external air conditioning system is connected to the air conditioning system, which is why only the diesel engine may be in operation.

Air conditioning system

The air conditioning system consists of the following components:
– Condenser on uppercarriage door
– Dryer on condenser
– A/C compressor on diesel engine

LWN/LR.x/V03.01//Auslieferung/2015-06-03/en

copyright by
LIEBHERR

– Climatic box beneath cabin

Condenser on uppercarriage door/dryer on condenser

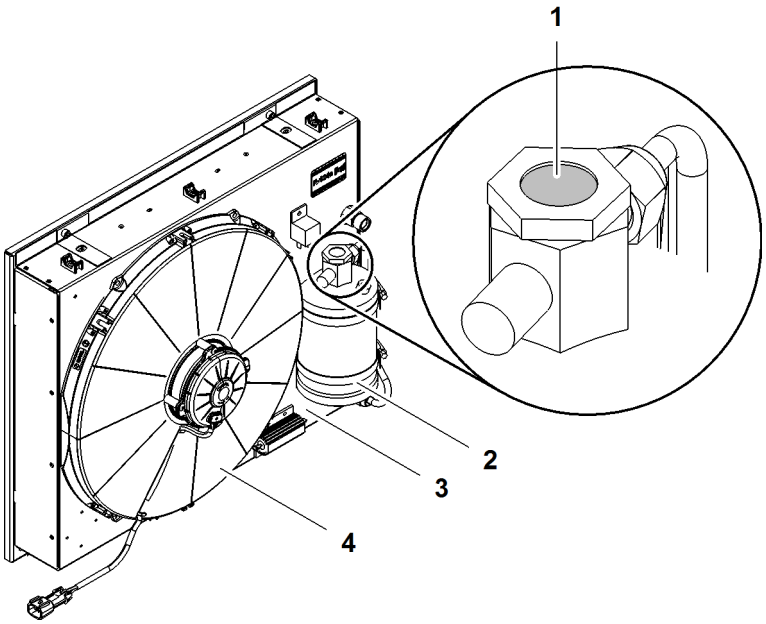

Fig. 489: Condenser on uppercarriage door/dryer on condenser

1 Inspection glass
2 Dryer
3 Condenser
4 Fan

Name	Value
Maximum cooling output	10.1 kW 14 HP
Nominal voltage	24 V
Maximum nominal current	8.7 A
Fan capacity	3650 m³/h (4,773.98 yd³/h) (free-blowing)
Fan motor	dual-stage
Coolant	R134 A without CFC
Weight	10.5 kg 23.15 lb

Tab. 294: Technical data condenser

LWN/LR.x/V03.01//Auslieferung/2015-06-03/en

copyright by
LIEBHERR

A/C compressor on diesel engine

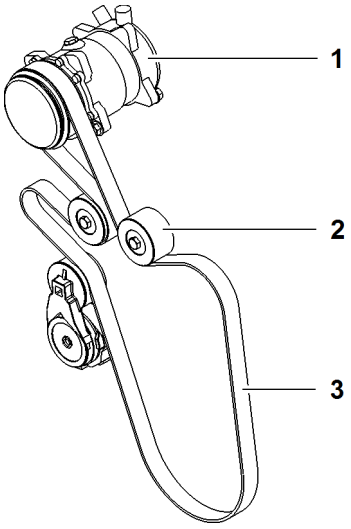

Fig. 490: A/C compressor on diesel engine

1 A/C compressor
2 Deflection pulley (3x)
3 Drive belts

The A/C compressor **1** is installed on the diesel engine. The A/C compressor **1** is driven via the drive belt **3**.

Climatic box beneath cabin

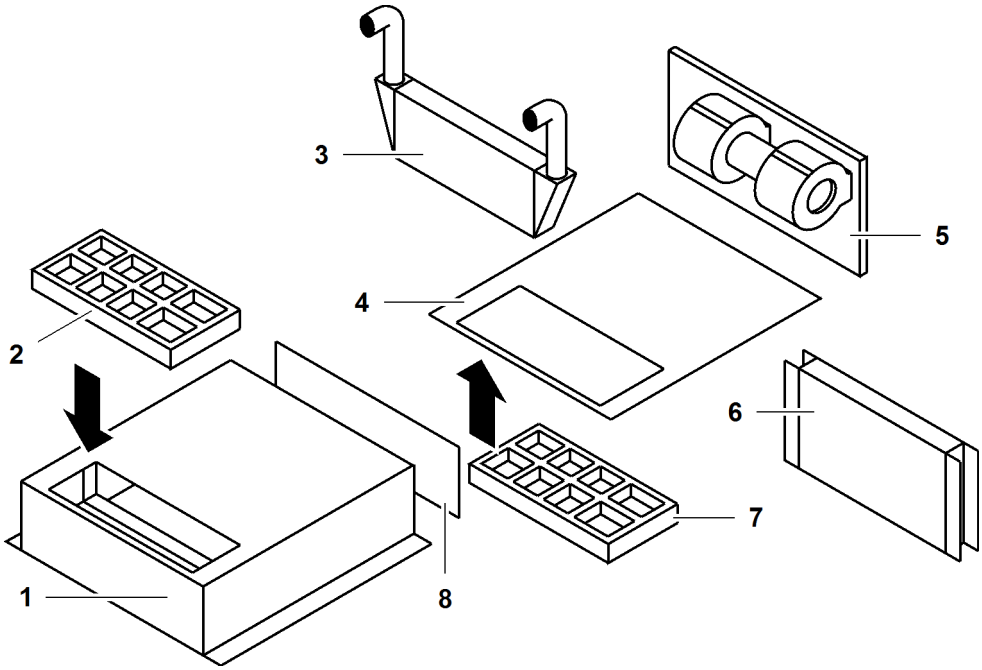

Fig. 491: Climatic box beneath cabin (illustration of principle)

1 Climatic box
2 Recirculated air filter
3 Heat exchanger
4 Bottom plate of climatic box
5 Blower
6 Evaporator
7 Fresh air filter
8 Flap recirculated air/fresh air

The cabin is supplied with warm air by the heat exchanger **3**.

LWN/LR.x/V03.01//Auslieferung/2015-06-03/en

The cabin is supplied with cold air by the evaporator **6**.

The air flow is controlled with the recirculated air/fresh air flap **8**.

External air conditioning system*

The external air conditioning system consists of the following components:
– Drive unit
– Control unit *external air conditioning system*

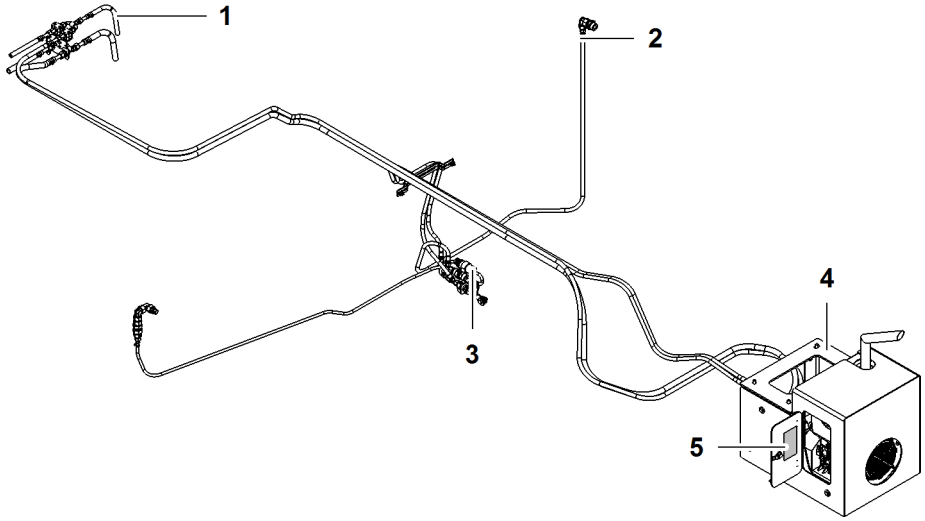

Fig. 492: External air conditioning system (illustration of principle)

1 Coolant line
2 Connection for fuel tank
3 Diesel pump
4 Drive unit
5 Maintenance intervals sign

The external air conditioning system cools down or heats up the cabin without operation of the diesel engine.

LWN/LR.x/V03.01//Auslieferung/2015-06-03/en

copyright by
LIEBHERR

Drive unit

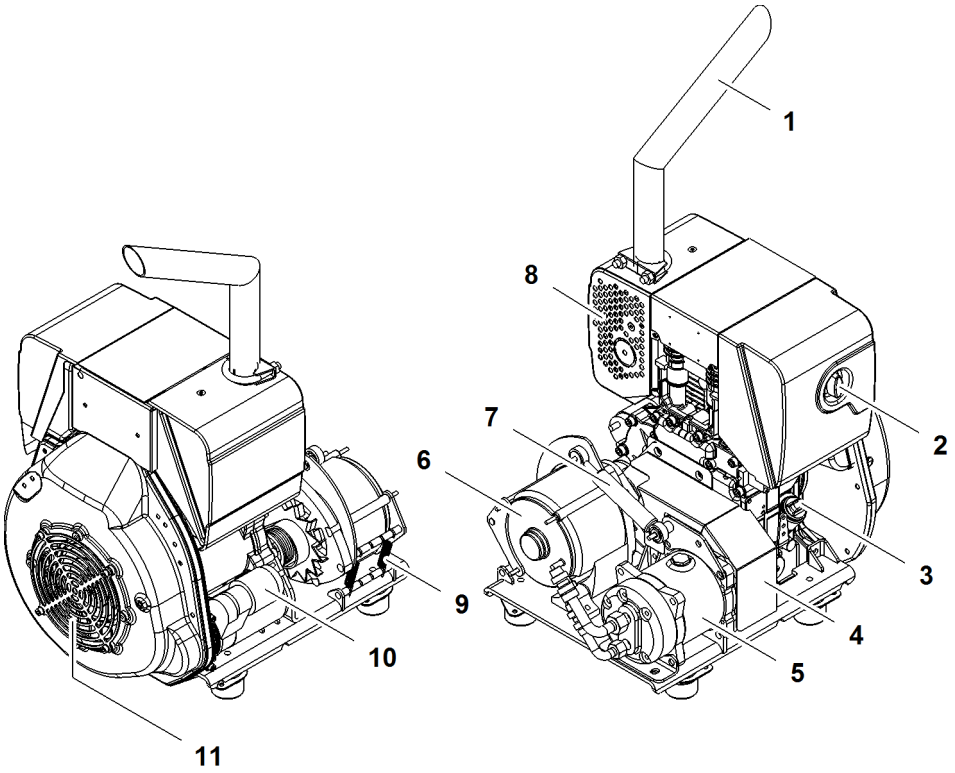

Fig. 493: Drive unit

1	Exhaust system	**7**	Vibration damper of belt tension
2	Air filter cover	**8**	Cover
3	Oil dipstick	**9**	Spring (2x) for belt tension
4	Cover of belt drive	**10**	Starter
5	Compressor	**11**	Fan
6	Generator		

The drive unit is depicted without cover.

The cooling air and the combustion air for the diesel engine are sucked in through the fan **11**.

The belt drive is located behind the cover **4**.

The springs **9** guarantee optimum belt tension. Shocks are absorbed by the vibration damper **7**.

The generator **6** charges the batteries when the machine is turned off.

Name	Value
Engine type	HATZ 1B40 CARB
Fuel	Diesel
Nominal voltage	24 V
Charging current	40 A
Engine output	5.6 kW 8 HP
Cooling capacity	4.7 kW 6 HP

LWN/LR.x/V03.01//Auslieferung/2015-06-03/en

copyright by
LIEBHERR

Name	Value
Coolant	R134 A without CFC
Weight	78 kg 172 lb

Tab. 295: Technical data drive unit

Control unit *external air conditioning system*

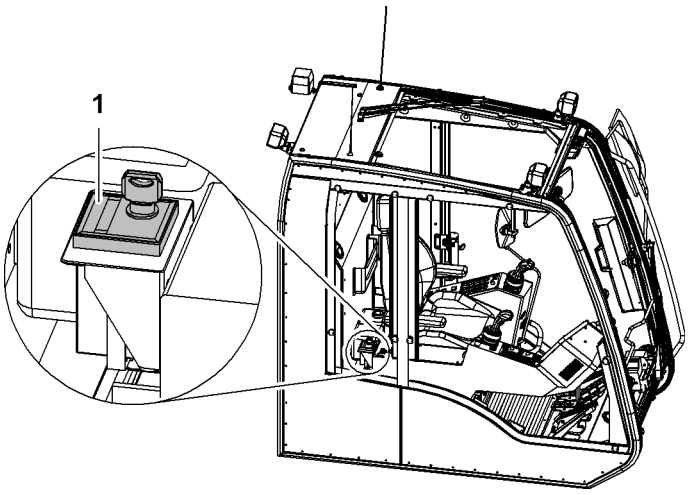

Fig. 494: Control unit external air conditioning system

1 Control unit *External air conditioning system* with ignition key

1.54.2 Heating circuit

Auxiliary water heating*

The auxiliary water heating serves to preheat the diesel engine, heat the cabin and switch cabinet *X1* and to defrost the windows.

Warm water is generated through diesel combustion. The water is pumped into the coolant circuit of the diesel engine with a circulation pump. This heats the diesel engine and the heating circuit heats the cabin.

The auxiliary water heating can be programmed with the operating element *auxiliary heating* in the cabin .

No external power supply is required for operating the auxiliary water heating.

An auxiliary heating system allows operation down to -25 °C (-13 °F). Two auxiliary heating system allow operation down to -40 °C (-40 °F).

LWN/LR.x/V03.01//Auslieferung/2015-06-03/en

copyright by
LIEBHERR

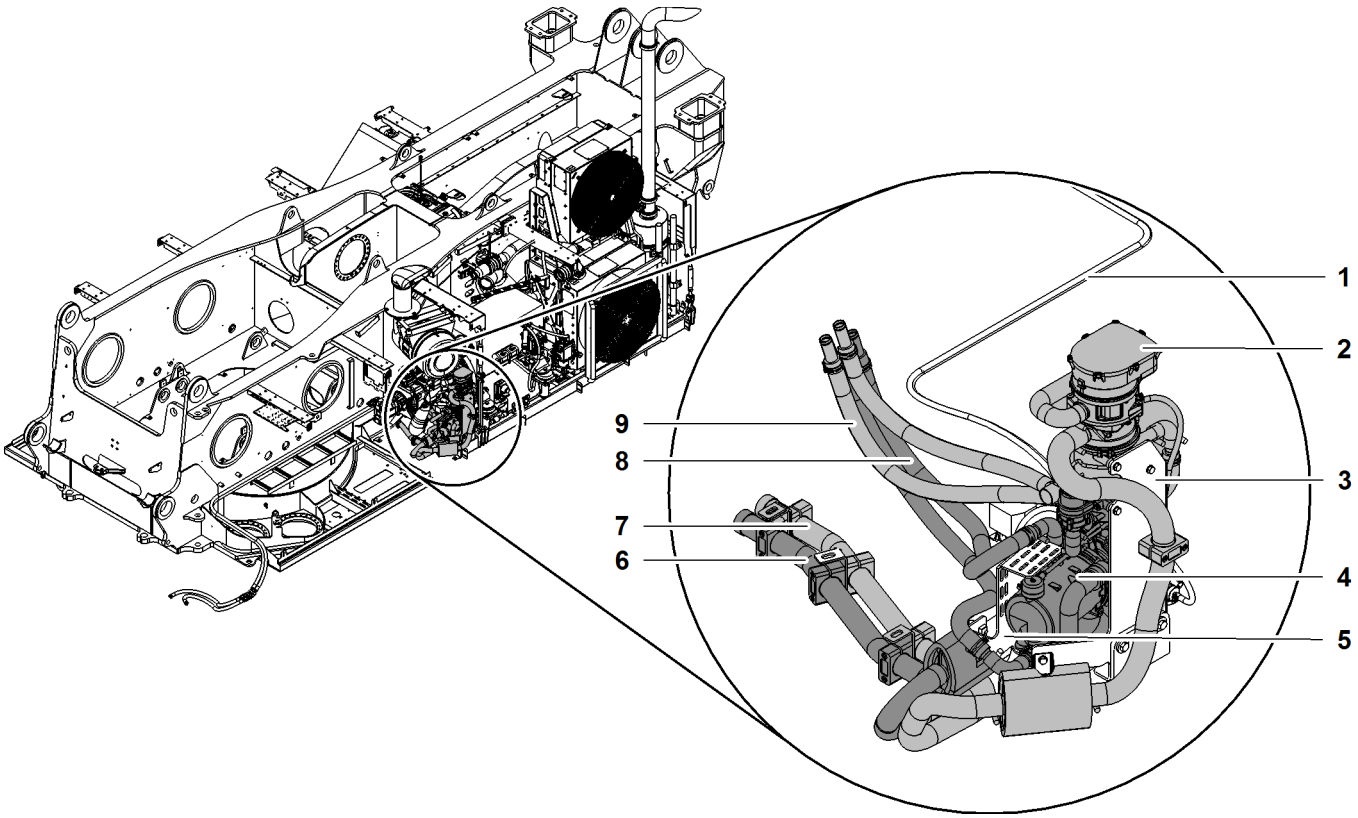

Fig. 495: Installation positions auxiliary water heating (LR 1002, LR 1003 und LR 1004) (illustration of principle)

1	Fuel line	**4**	Auxiliary water heating*	**7**	Exhaust pipe
2	Auxiliary water heating*	**5**	Bracket	**8**	Warm water pipe (2x)
3	Bracket	**6**	Exhaust pipe	**9**	Warm water pipe (2x)

Mufflers are installed on the exhaust pipes **6 + 7**. A fuel filter is installed on the fuel line **1**.

LWN/LR.x/V03.01//Auslieferung/2015-06-03/en

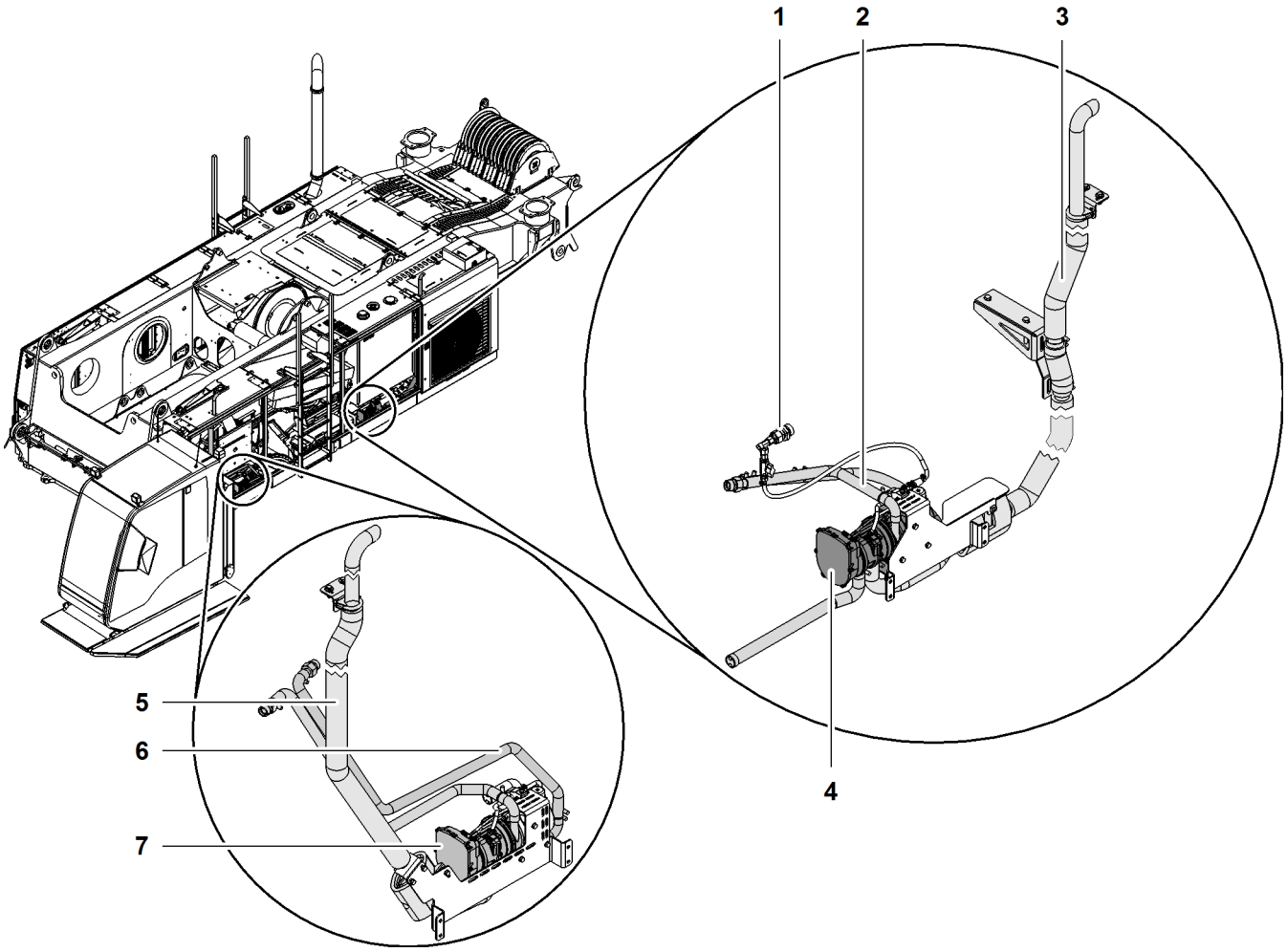

Fig. 496: Installation position auxiliary water heating (LR 1006)

1 Fuel line
2 Warm water pipe
3 Exhaust pipe
4 Auxiliary water heating*
5 Exhaust pipe
6 Warm water pipe
7 Auxiliary water heating*

Mufflers are installed on the exhaust pipes **3 + 5**. A fuel filter is installed on the fuel line **1**.

Name	Value
Webasto auxiliary heating Thermo Pro 90	
Maximum heating output	9.1 kW 12 HP
Nominal voltage	24 V
Nominal power consumption	80 W
Automatic height adjustment	down to 3500 m (11482‘ 11“ ft-in)
Weight	4.9 kg 10.80 lb
Operating temperature	-40 °C (-40 °F) to 80 °C (176 °F)

Tab. 296: Technical data auxiliary water heating

LWN/LR.x/V03.01//Auslieferung/2015-06-03/en

copyright by
LIEBHERR

Battery heating*

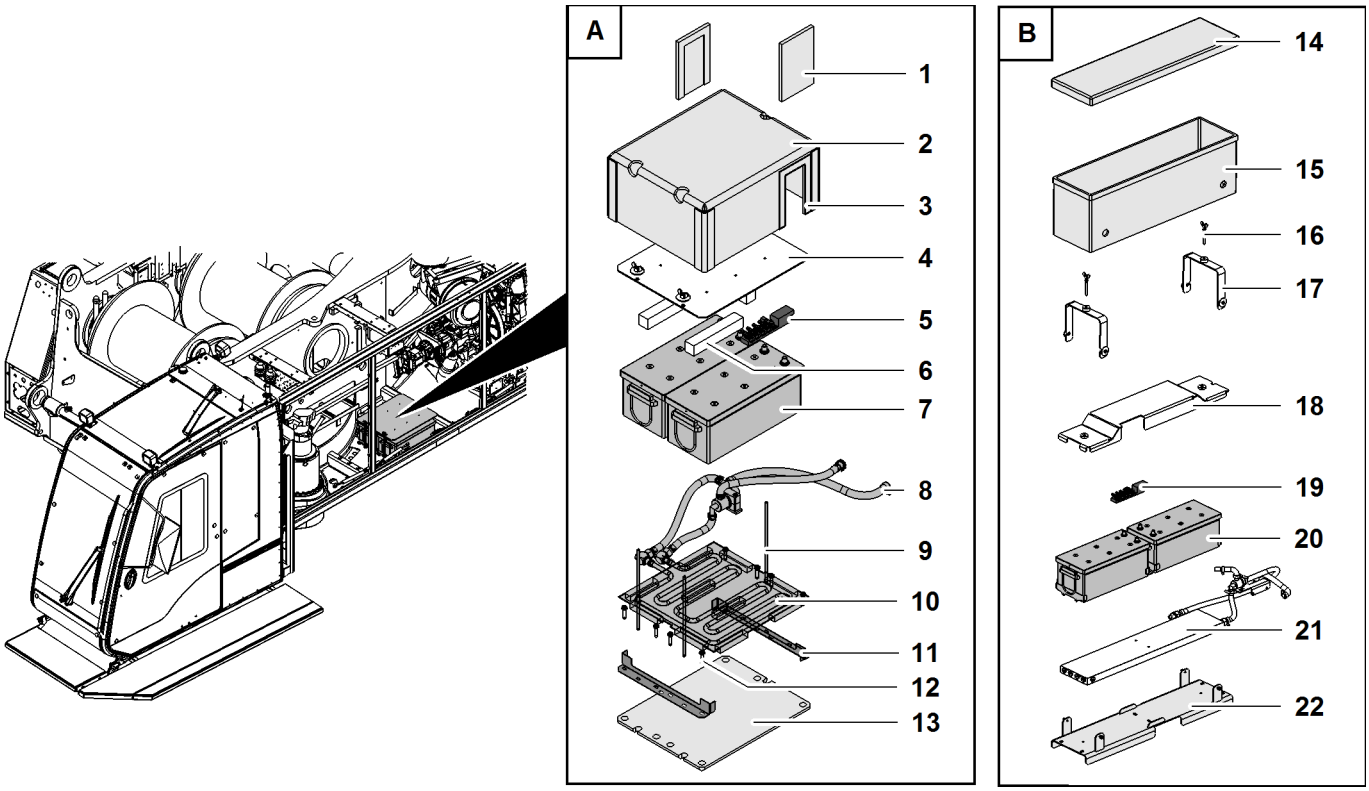

Fig. 497: Battery heating (illustration of principle)

1	Lateral insulation (2x)	**9**	Threaded bar (3x) with screw fitting	**17**	Bracket (2x)
2	Insulation	**10**	Heating coil	**18**	Cover
3	Velcro fastener	**11**	Battery holder	**19**	Fuse block
4	Cover	**12**	Screws	**20**	Battery (2x)
5	Fuse block	**13**	Plate	**21**	Heating coil
6	Wooden block (3x)	**14**	Top insulation	**22**	Plate
7	Battery (2x)	**15**	Insulation	**A**	Installation variant LR 1002, LR 1003, LR 1004
8	Connection diesel engine cooling circuit	**16**	Screw (2x)	**B**	Installation variant LR 1006

Via the connection **8** on the diesel engine's coolant circuit, a heating coil **10 + 21** warms the batteries **7 + 20**.

1.54.3 Auxiliary air heating*

The auxiliary air heating serves to heat the cabin and switch cabinet *X1* and to defrost the windows.

Warm air is generated through diesel combustion. The air is blown into the cabin by the blower. This heats the cabin.

The auxiliary air heating can be programmed with the operating element *auxiliary heating* in the cabin .

No external power supply is required for operating the auxiliary air heating.

LWN/LR.x/V03.01//Auslieferung/2015-06-03/en

copyright by
LIEBHERR

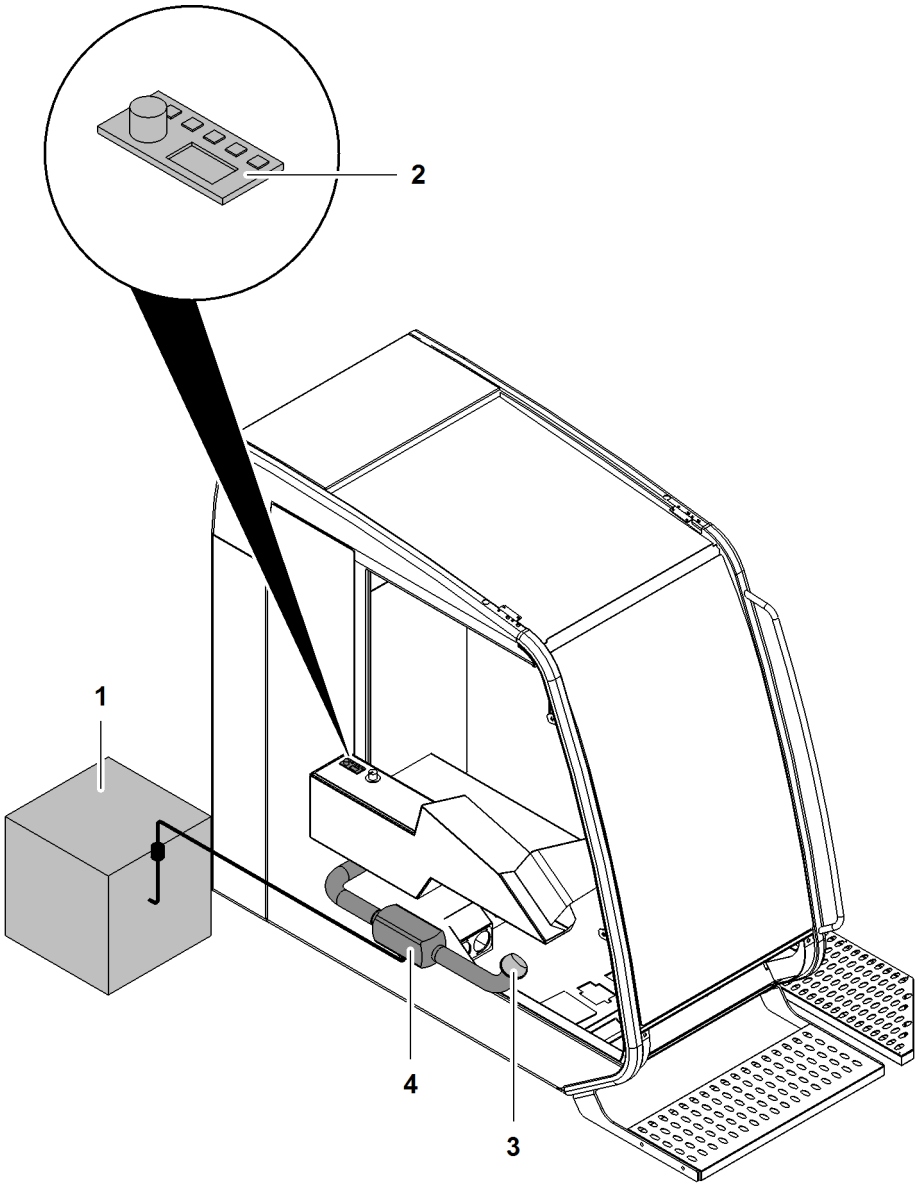

Fig. 498: Auxiliary air heating installation position (illustration of principle)

1 Fuel tank
2 *Auxiliary heating* control unit
3 Air vent
4 Auxiliary heating

Name	Value
Webasto air heater Airtronik D2	
Maximum heating output	2.2 kW 3 HP
Nominal voltage	24 V
Maximum nominal output	34 W
Operating temperature	-40 °C (-40 °F) to 70 °C (158 °F)
Weight	2.7 kg 5.95 lb

Tab. 297: Technical data auxiliary air heating

LWN/LR.x/V03.01//Auslieferung/2015-06-03/en

copyright by
LIEBHERR

Auxiliary heating control unit

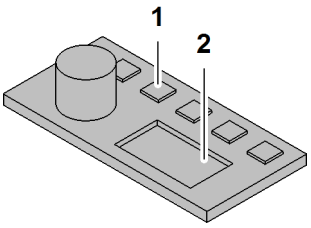

Fig. 499: Auxiliary heating control unit

1 Buttons **2** Display

Auxiliary heating altitude kit*

The auxiliary heating altitude kit is required when operating the machine at high altitudes.

After starting the heater, the air pressure sensor measures the atmospheric air pressure at intervals. It then transfers the measuring values to the heater's control unit. The control unit analyzes the measurement values and adapts the fuel flow rate of the dosing pump to the current atmospheric air pressure. Reduction of the flow rate starts as from 1400 m (4593‘ 2“ ft-in). At the same time, this requires a reduction of the heating output of 9% per 1000 m (3280‘ 10“ ft-in).

Name	Value
Altitude kit for Webasto air heater Airtronik D2	
Maximum permitted height	4000 m 13123‘ 4“ ft-in
Measuring range	60 kPa (8.70 psi) to 115 kPa (16.68 psi)
Nominal voltage	8 V to 32 V
Dimensions	76 mm (2.99“ in) x 76 mm (2.99“ in) x 29 mm (1.14“ in)
Operating temperature	-40 °C (-40 °F) to 85 °C (185 °F)

Tab. 298: Technical data auxiliary heating altitude kit

1.54.4 Electric components

An external power supply with the national nominal mains voltage is needed to operate the electric components.

LWN/LR.x/V03.01//Auslieferung/2015-06-03/en

copyright by
LIEBHERR

Hydraulic oil tank heater*

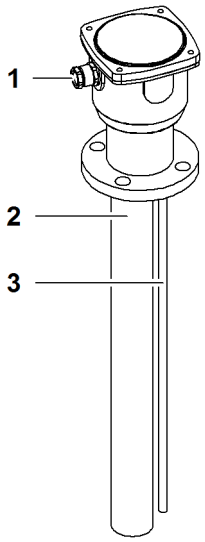

Fig. 500: Hydraulic oil tank heater

1 Electric connection
2 Immersion heater
3 Temperature sensor

The immersion heater **2** is installed in the hydraulic oil tank.

Name	Value
Output	600 W
Nominal voltage	200 V to 254 V
Weight	12 kg 26.46 lb
Length	709 mm 2‘ 4“ ft-in
Diameter	52 mm 2.05“ in
Safety thermostat	set to 100 °C (212 °F)
Control thermostat	set to 20 °C (68 °F)

Tab. 299: Technical data hydraulic oil tank heater

LWN/LR.x/V03.01//Auslieferung/2015-06-03/en

copyright by
LIEBHERR

Diesel engine coolant heating*

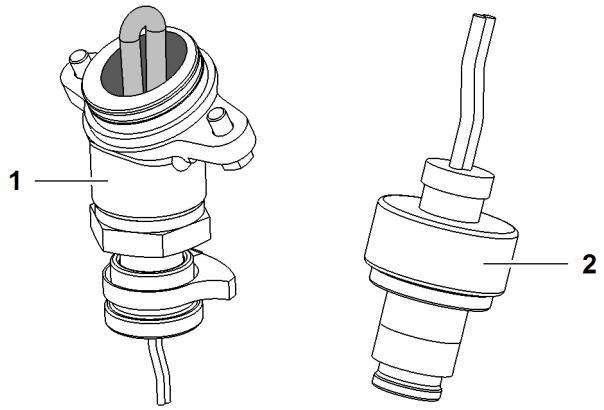

Fig. 501: Diesel engine coolant heating

1 Immersion heater **2** Thermostat

The immersion heater **1** is installed in the diesel engine's coolant circuit.

The temperature of the coolant rises by approx. 3 °C (37 °F) per hour. The thermostat on the diesel engine adjusts the temperature between 50 °C (122 °F) and 60 °C (140 °F).

Name	Value
Output	1 kW 1 HP
Nominal voltage	200 V to 254 V
Nominal voltage	4.2 A
Length	84 mm 3.31“ in
Heater diameter	38 mm 1.50“ in

Tab. 300: Technical data diesel engine coolant heating

LWN/LR.x/V03.01//Auslieferung/2015-06-03/en

copyright by
LIEBHERR

Diesel engine lubrication oil heating*

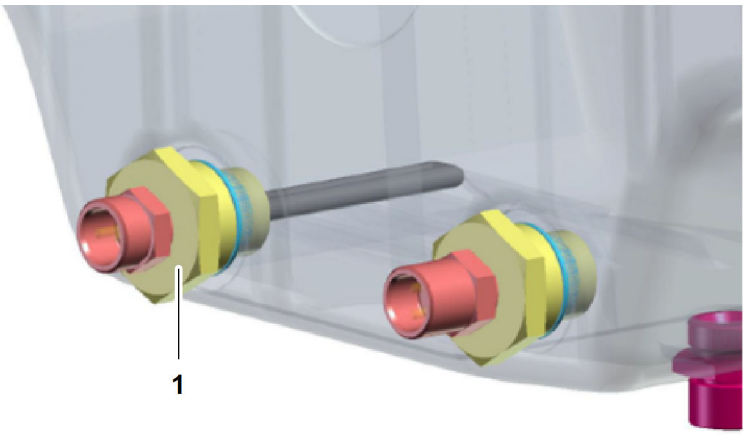

Fig. 502: Diesel engine lubrication oil heating

1 Immersion heater

The immersion heater **1** is installed in the oil sump of the diesel engine.

Name	Value
Output	300 W
Nominal voltage	200 V to 254 V
Weight	0.5 kg 1.10 lb
Control thermostat	37 °C (99 °F) to 48 °C (118 °F)

Tab. 301: Technical data diesel engine lubrication oil heating

LWN/LR.x/V03.01//Auslieferung/2015-06-03/en

copyright by
LIEBHERR

1.54.5 Mechanic components

Fuel pre-filter heating

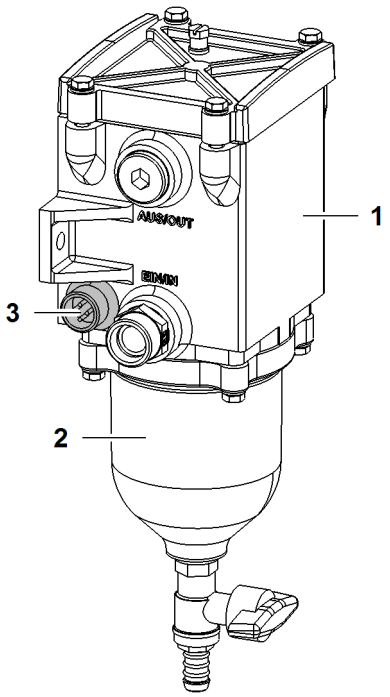

Fig. 503: Fuel pre-filter heating

1 Fuel pre-filter
2 Condensate trap
3 Voltage supply

The fuel pre-filter heater warms up the fuel. The fuel pre-filter heater is not active until the ignition is switched on.

Hydraulic oil heater*

If the diesel engine is running and the hydraulic oil temperature drops below a certain value, the hydraulic oil heater is activated automatic via the Litronic control.

The hydraulic oil heater is turned off automatically once the hydraulic oil temperature has reached a certain value.

Low temperature function lock*

A temperature sensor is installed on the machine.

If the external temperature drops below -25 °C (-13 °F), the machine cannot be put into operation.

If the outside temperature falls below -25 °C (-13 °F) during operation, the following movements are blocked:
– Winch1 and winch2
– Main boom luffing winch
– Jib luffing winch
– Slewing gear
– Crawler

LWN/LR.x/V03.01//Auslieferung/2015-06-03/en

copyright by
LIEBHERR

1.55 Leak oil return*

The leak oil return (also called leak oil collector) collects the leak oils of equipment and other consumers on the main boom base section. The leak oils are returned to the hydraulic oil tank.

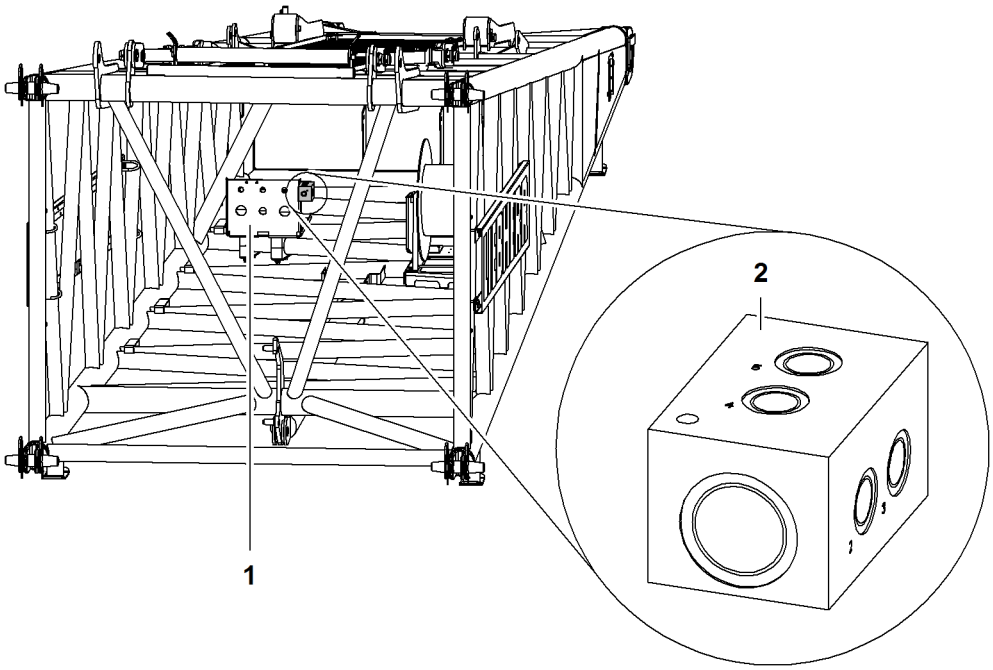

Fig. 504: Leak oil return

1 Bulkhead plate in the main boom base section

2 Leak oil return block

Numbers from 1 to 8 are embossed on the leak oil return block **2**.

1. Leak oil return to hydraulic tank
2. [Reserve]
3. Leak oil hose winch right (only HS devices)
4. [Reserve]
5. [Reserve]
6. Leal oil rope reeving winch
7. Leak oil hose winch left (only HS devices)
8. Leak oil leader winch

Optionally available:
– Leak oil jib luffing winch
– Leak oil tagline winch

LWN/LR.x/V03.01//Auslieferung/2015-06-03/en

copyright by
LIEBHERR

1.56 Ladder* for boom

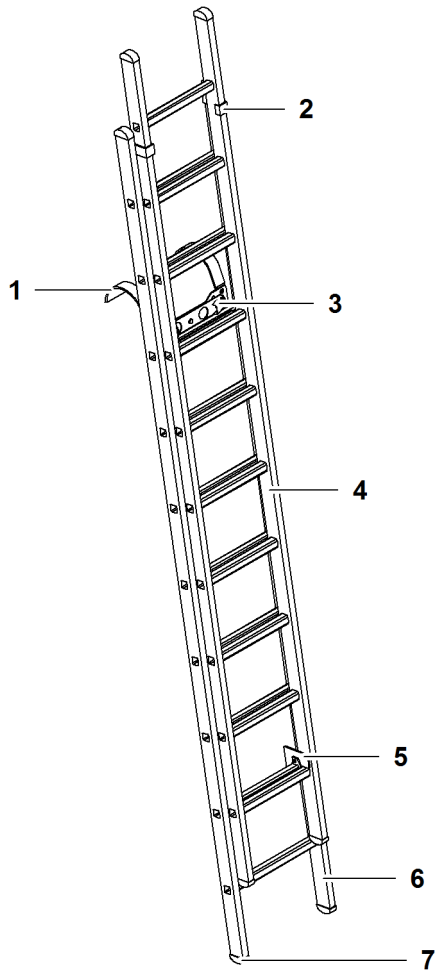

Fig. 505: Ladder for boom

1	Support for boom	**5**	Locking element (2x)
2	Guide rail (2x)	**6**	Ladder
3	Locking element (2x)	**7**	Adjustable rubber foot (2x)
4	Adjustable ladder part		

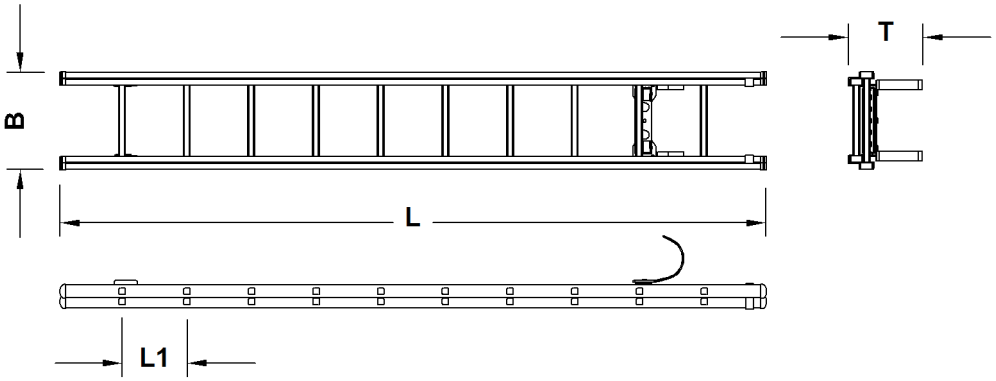

Fig. 506: Ladder for boom dimensions

copyright by
LIEBHERR

Name		Value
L	Minimum length	3060 mm 10‘ ft-in
	Maximum length	4920 mm 16‘ 2“ ft-in
L1	Spoke distance	280 mm 11.02“ in
B	Width	420 mm 1‘ 5“ ft-in
T	Depth	320 mm (1‘ 1“ ft-in) (2x)
Maximum working height		6000 mm 19‘ 8“ ft-in
Number of spokes		2 x 10 spokes
Weight		15.2 kg 33.51 lb

Tab. 302: Ladder for boom technical data

LWN/LR.x/V03.01//Auslieferung/2015-06-03/en

copyright by
LIEBHERR

1.57 Ladder* for uppercarriage

A ladder for the uppercarriage is supplied with each machine. A second ladder is optionally available to fit a ladder on each side of the uppercarriage.

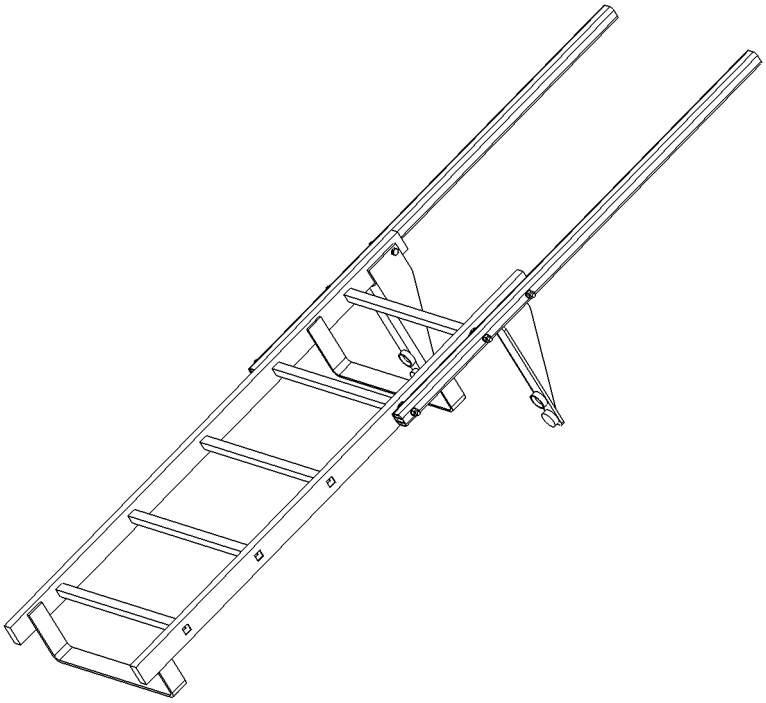

Fig. 507: Ladder for uppercarriage

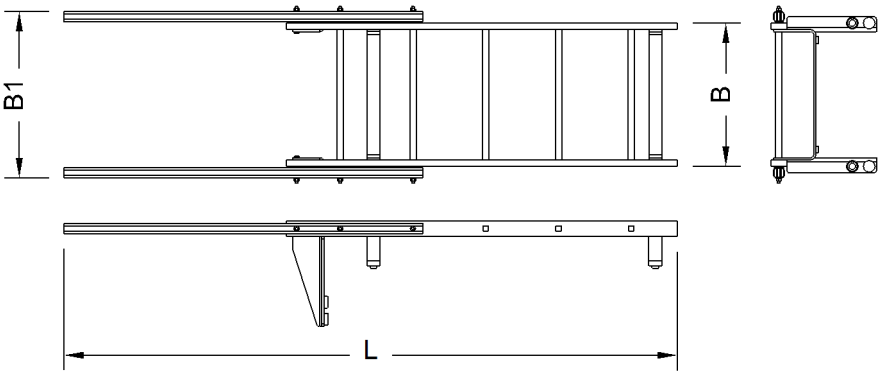

Fig. 508: Dimensions of ladder for uppercarriage

Name		Value
L	Length	2574 mm 8‘ 5“ ft-in
W	Width	550 mm 1‘ 10“ ft-in
W1	Width	604 mm 2‘ ft-in

LWN/LR.x/V03.01//Auslieferung/2015-06-03/en

copyright by
LIEBHERR

Name	Value
Weight	15 kg 33.07 lb

Tab. 303: Technical data ladder for uppercarriage

LWN/LR.x/V03.01//Auslieferung/2015-06-03/en

copyright by
LIEBHERR

1.58 Reading light* for cabin

The reading light serves for additional illumination of the control panels. The reading light is turned into the desired position with its bendable swan neck.

The exact installation position varies according to machine type.

The following control panels are illuminated:
– Control panel *X23*
– Control panel *X25*

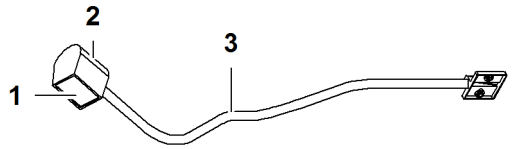

Fig. 509: Reading light

1 Lamp
2 Switch
3 Swan neck

Name	Value
Length of swan neck	500 mm 1‘ 8“ ft-in
Illuminant	Xenon bulb
Nominal voltage	24 V
Power consumption of illuminant	7.5 W

Tab. 304: Technical data reading light

LWN/LR.x/V03.01//Auslieferung/2015-06-03/en

copyright by
LIEBHERR

1.59 Litronic control system

The Litronic control system in the machine permits electrohydraulic proportional control, which in turn means that several main movements can be carried out. This control system has been designed to provide effective and economical operation.

The central unit of the Litronic control system is located in the switch cabinet of the machine and is connected via the CAN bus to the engine control unit, and all the sensors, transmitters and limit switches.

Litronic control system I/O devices in the cab:
- Monitor:
  - is in the form of a touch screen.
  - shows the current screens, machine setups, load charts and error protocols.
  - enables a function to be selected by touching the symbols with the finger.
- Control lever
- Keyboards and the Litronic service panel
- Safety lever at the front of the left-hand control panel
- Foot pedals
- Process data recording (PDE) combined with an external PCMCIA drive and a needle printer
- Machine data acquisition (MDE)

The central unit of the Litronic control system includes two drives for PCMCIA storage media and interfaces. The switch cabinet to the side contains the GSM/GPRS/GPS modem used for data transmission.

I/O devices outside the cab:
- Tension load cells and angle sensors
- Sensors, limit switches and transmitters that are situated at various locations on the machine or its equipment
- Warning signal (horn)
- Warning device (siren)
- Load moment limiter (LML)
- Reversing alarm
- Flashing light on the cab roof

The Litronic control system receives the latest data from the tension load cells, angle sensors, sensors, limit switches and transmitters, compares them, performs some calculations and outputs the results.

Some machine data are collected by the system. Liebherr uses the stored data to improve the operation and reliability.

LWN/LR.x/V03.01//Auslieferung/2015-06-03/en

copyright by
LIEBHERR

1.60 Retrofit kits* for operation with two ropes over the jib head section

1.60.1 Retrofit kit for luffing jibs 1008 / 1309 / 1713 / 1916 / 2316

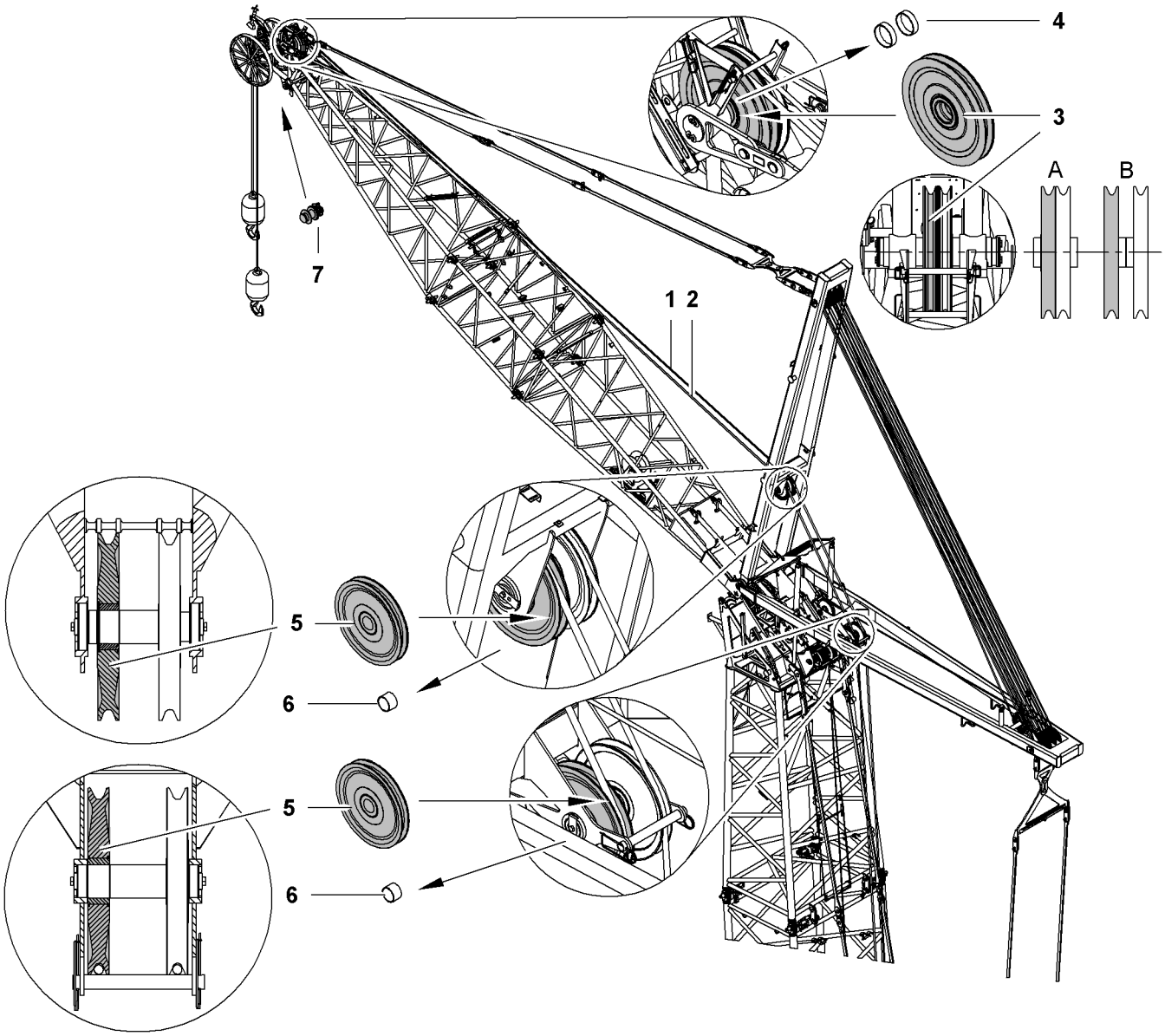

Fig. 510: Additional pulleys and rope fixing point with two ropes over luffing jib head section

1	Winch2 rope	**4**	Bush (2x)	**7**	Pins, washers and safety pins for rope fixing point
2	Winch1 rope	**5**	Pulley (2x)	**A**	Assembly position A
3	Pulley	**6**	Bush (2x)	**B**	Assembly position B

The pulley **3** (630 mm (2‘ 1“ ft-in) x 15 mm (0.59“ in) x 140 mm (5.51“ in)) replaces the two bushes **4** (152 mm (5.98“ in) x 141 mm (5.55“ in) x 40 mm (1.57“ in)).

LWN/LR.x/V03.01//Auslieferung/2015-06-03/en

copyright by LIEBHERR

The pulleys **5** (500 mm (1‘ 8“ ft-in) x 15 mm (0.59“ in) x 90 mm (3.54“ in)) replace the bushes **6** (101.6 mm (4.00“ in) x 90.5 mm (3.56“ in) x 67 mm (2.64“ in)).

Assembly position	Type of jib
A	Luffing jib 1008
	Luffing jib 1309
	Luffing jib 1713
	Luffing jib 1916
B	Luffing jib 2316

Tab. 305: Assembly position for pulley on the jib head section

1.60.2 Retrofit kit for 1008 fixed jib

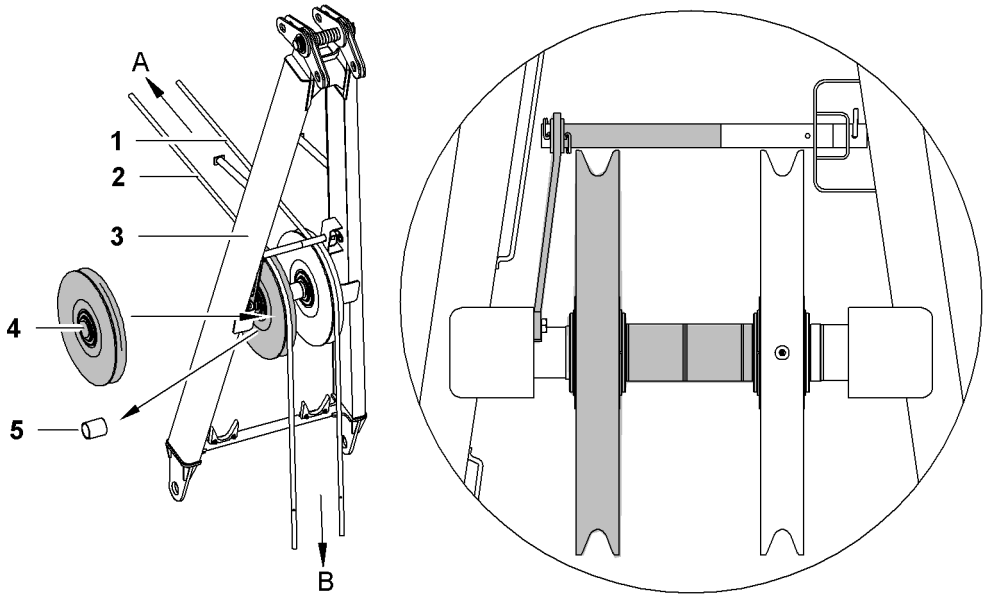

Fig. 511: Retrofit kit for 1008 fixed jib

A Direction of jib head section
B Direction of main boom
1 Winch1 rope
2 winch2 rope
3 A-frame 2
4 Pulley
5 Socket

The pulley **4** (630 mm (2‘ 1“ ft-in) x 15 mm (0.59“ in) x 140 mm (5.51“ in)) and all the components shown in grey in the detailed drawing replace the bush **5** (101.6 mm (4.00“ in) x 90.5 mm (3.56“ in) x 120 mm (4.72“ in)).

LWN/LR.x/V03.01//Auslieferung/2015-06-03/en

copyright by LIEBHERR

1.60.3 Retrofit kit for 0806 fixed jib

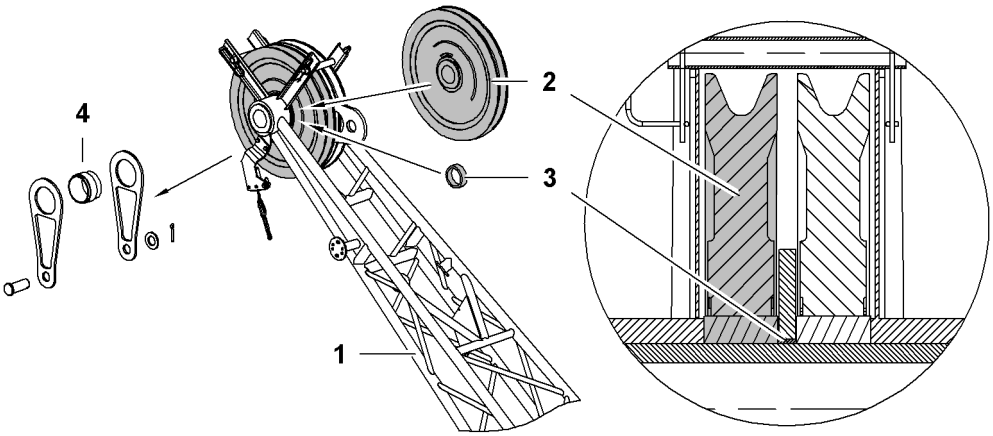

Fig. 512: Retrofit kit for 0806 fixed jib

1	0806 jib head section	**3**	Socket
2	Pulley	**4**	Rope fixing point components

The pulley **2** (630 mm (2‘ 1“ ft-in) x 15 mm (0.59“ in) x 140 mm (5.51“ in)) and the bush **3** (150 mm (5.91“ in) x 140 mm (5.51“ in) x 19 mm (0.75“ in)) replace all the rope fixing point components **4**.

LWN/LR.x/V03.01//Auslieferung/2015-06-03/en

1.61 Luffing jib luffing winch as auxiliary winch*

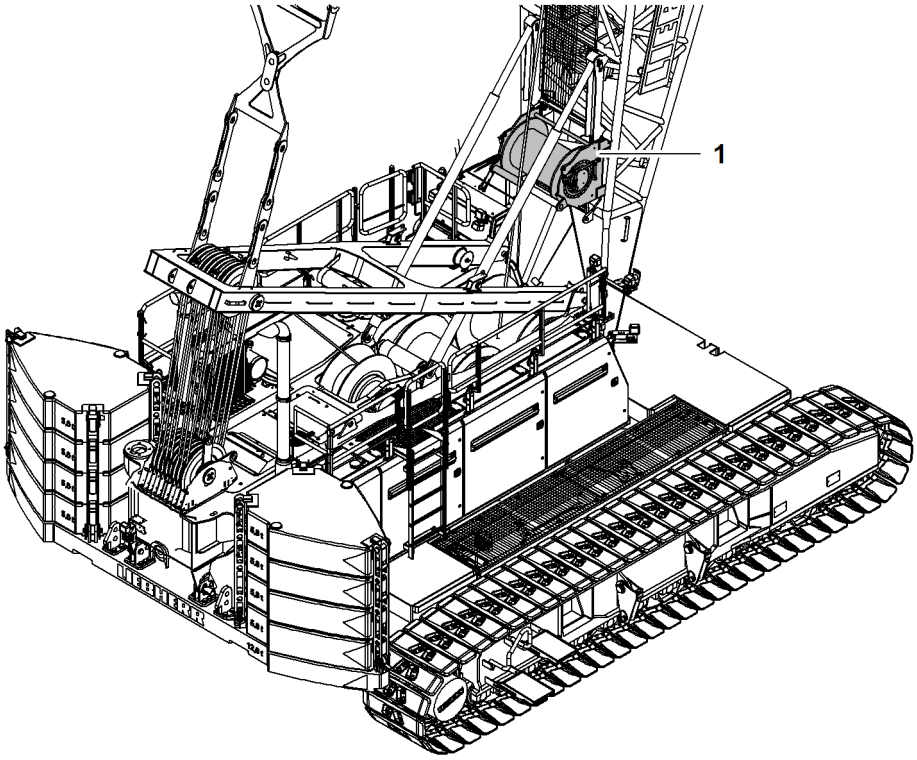

Fig. 513: Luffing jib luffing winch as auxiliary winch

1 Jib luffing winch

The jib adjustment winch **1** is used to adjust the jib.

With the retrofitting kit “jib luffing winch as auxiliary winch,” the jib luffing winch **1** can also be used as auxiliary winch.

LWN/LR.x/V03.01//Auslieferung/2015-06-03/en

copyright by
LIEBHERR

1.62 By-pass flow filter system*

The SDU-H350 RK/TWIN by-pass flow filter system comprises two filter housings with filter elements (SDFC), a dynamic pressure manometer, the hoses and an oil sump with drain screw.

The exact installation position varies according to machine type.

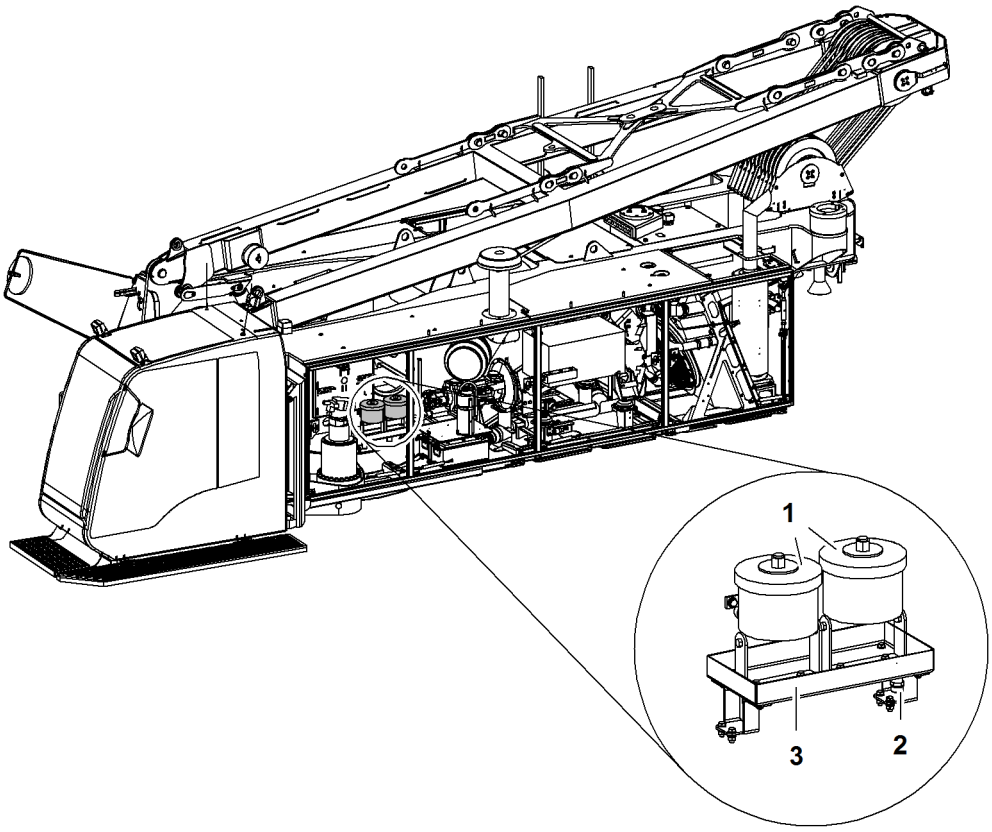

Fig. 514: By-pass flow filter system

1 Filter housing (2x)
2 Drain plug
3 Oil sump

The cellulose-based filter elements (SDFC) absorb abrasive and catalytic contamination, foreign matter (> 1 µm (1 µm)) and free water content from pressure liquids and other lubricants. Despite the fact that the filters are very fine (< 1 µm (1 µm)), oil additives and admixtures are not filtered out, as the filtration occurs at very low and gentle pressure levels (< 5 bar (72.52 psi)). Read the counter pressure off the dynamic pressure manometer situated under the left filter housing.

LWN/LR.x/V03.01//Auslieferung/2015-06-03/en

copyright by
LIEBHERR

1.63 Emergency operation control*

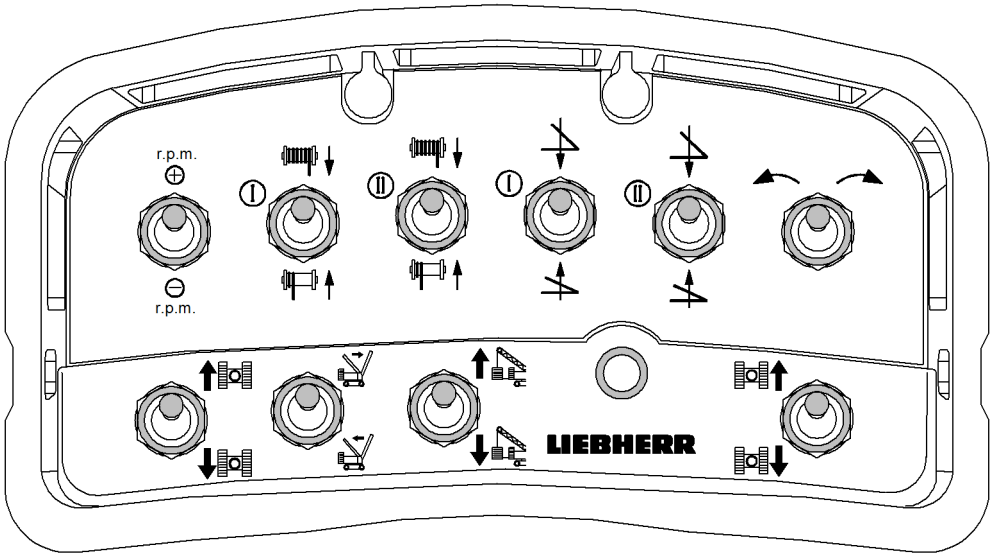

Fig. 515: Emergency control system

Name	Value
Length	248 mm 9.76“ in
Width	118 mm 4.65“ in
Height	137 mm 5.39“ in
Nominal voltage	18 V to 36 V
Operating temperature	-40 °C (-40 °F) to 90 °C (194 °F)
Storage temperature	-50 °C (-58 °F) to 90 °C (194 °F)
Weight	5.5 kg 12.13 lb

Tab. 306: Technical data emergency control system

LWN/LR.x/V03.01//Auslieferung/2015-06-03/en

copyright by
LIEBHERR

1.64 Visual motion warning device*

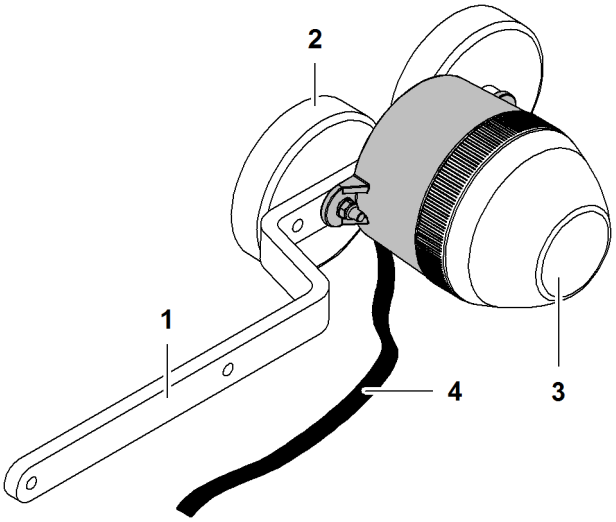

Fig. 516: Visual motion warning device

1	Handle	**3**	Flashing light
2	Magnet (2x)	**4**	Electric cable

The visual motion warning devices on the rear counterweight are an additional safety feature and emit a warning when the crawlers are moving or the crane is swinging.

The visual motion warning devices are flashing lights that are fitted in suitable locations on the rear counterweight using magnets.

The electrics are connected via the acoustic motion warning devices.

NOTICE
Incorrect assembly/disassembly of the visual motion warning devices!
Risk of damage to the visual motion warning devices.

- ▶ Do not trap or crush the electric cable.
- ▶ Only fit the visual warning devices after the rear counterweight has been attached.
- ▶ Always remove the visual motion warning devices before removing the rear counterweight.

Name	Value
Illuminant	Xenon
Nominal voltage	24 V
Current consumption	0.3 A
Output	5 W
Flashing frequency	60 flashes/minute
Temperature range	-30 °C (-22 °F) to 50 °C (122 °F)

Tab. 307: Visual motion warning device technical data

LWN/LR.x/V03.01//Auslieferung/2015-06-03/en

copyright by
LIEBHERR

Name	Value
Illuminant	LED
Nominal voltage	24 V
Current consumption	0.3 A
Temperature range	-40 °C (-40 °F) to 60 °C (140 °F)

Tab. 308: Visual motion warning device technical data

LWN/LR.x/V03.01//Auslieferung/2015-06-03/en

copyright by
LIEBHERR

1.65 Pump wear indicator*

Chip controls enable early detection of wear on hydraulic pumps.

The magnet in the chip control draws dirt particles out of the hydraulic oil. In case of inadmissible contamination, an error message appears on the monitor.

The following pumps are equipped with a chip control:
– Winch1
– Winch2
– Swing
– LPVD-pump

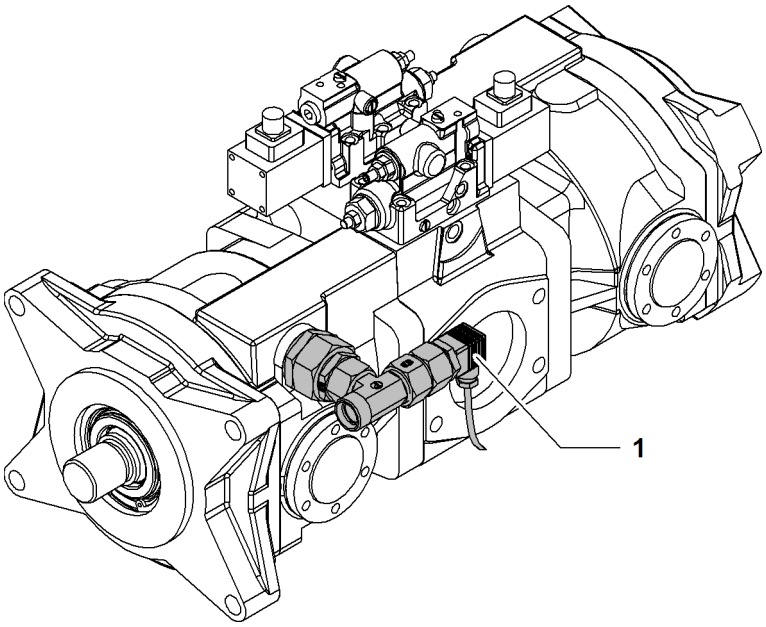

Fig. 517: Pump wear indicator (illustration of principle)

1 Chip control

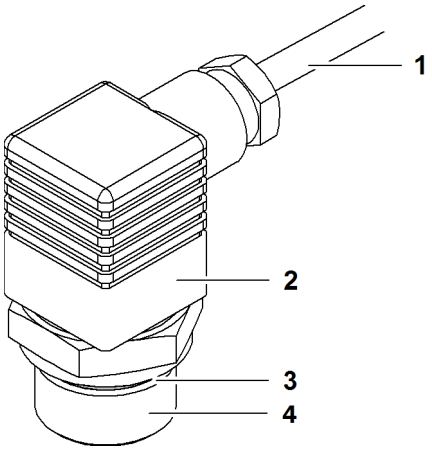

Fig. 518: Chip control

1 Electric cable
2 Plug
3 Seal ring
4 Magnet

LWN/LR.x/V03.01//Auslieferung/2015-06-03/en

Name	Value
Maximum switching voltage	30 V
Maximum switching current	0.2 A
Maximum oil pressure	6 bar 87.02 psi
Ambient temperature	-25 °C (-13 °F) to 90 °C (194 °F)
Maximum torque	60 Nm 44 ft-lb

Tab. 309: Technical data chip control

LWN/LR.x/V03.01//Auslieferung/2015-06-03/en

copyright by
LIEBHERR

1.66 Quick latch couplings* on jib luffing winch

Quick latch couplings ease the installation or dismantling of the jib luffing winch on the main boom base section.

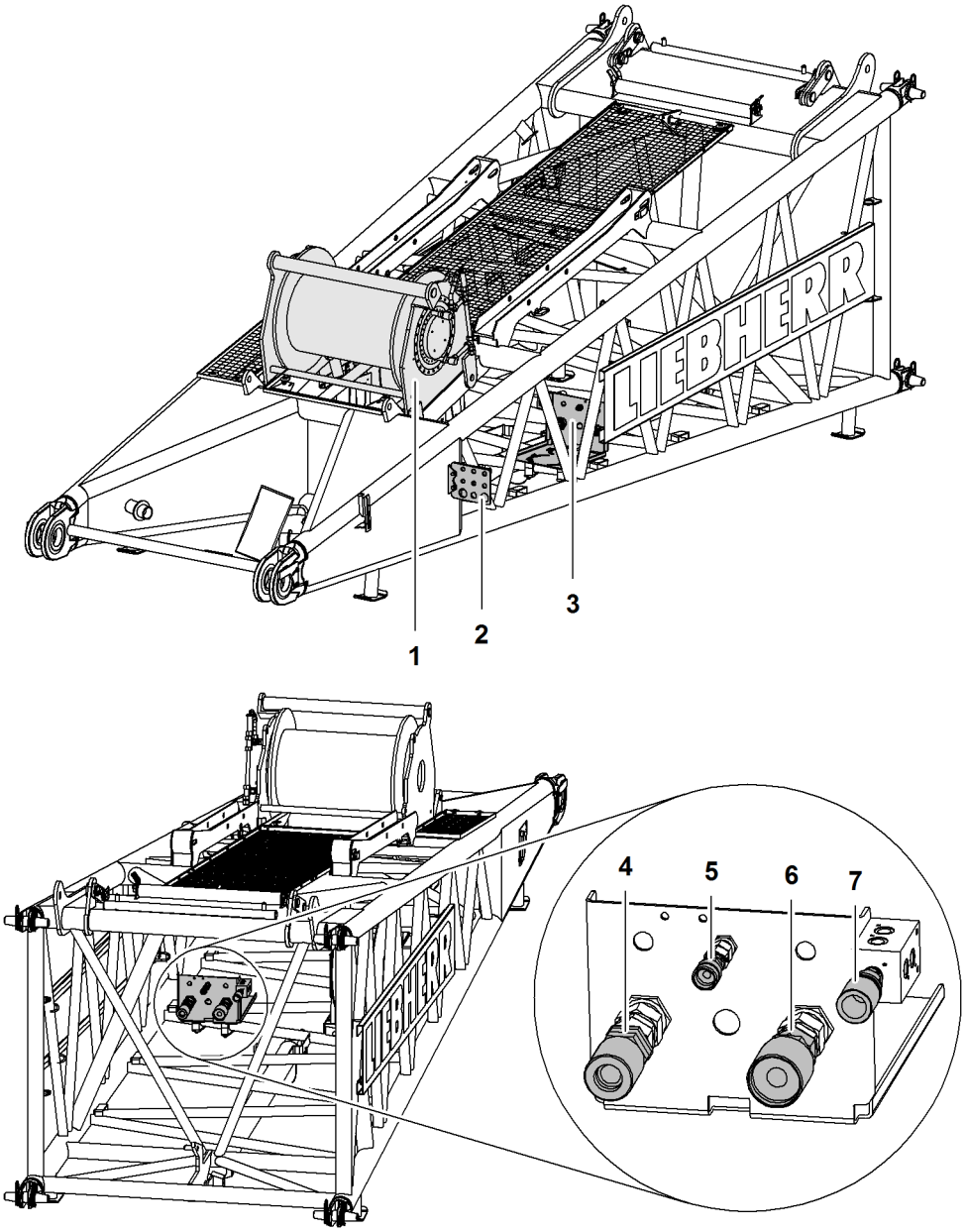

Fig. 519: Quick latch couplings on jib luffing winch

1	Luffing jib luffing winch	**5**	Hydraulic line for flushing oil
2	Bulkhead plate 1	**6**	Hydraulic line lifting
3	Bulkhead plate 2 with quick latch coupling	**7**	Hydraulic line for leak oil
4	Hydraulic line lowering		

With the main boom base sections with a length of 10 m (32‘ 10“ ft-in), the quick latch couplings are mounted backwards.

Bulkhead plate 2 **3** features hydraulic connections for:
– Assembly cylinder

LWN/LR.x/V03.01//Auslieferung/2015-06-03/en

– Rope reeving winch
– Luffing jib luffing winch
– Tagline winch

Only the hydraulic connections of the jib luffing winch are designed with quick latch couplings. The hydraulic connections vary in size and shape to prevent wrong connection.

Screw connections:
– Hydraulic line lifting
– Hydraulic line lowering

Plug-type connections:
– Hydraulic line for leak oil
– Hydraulic line for flushing oil

LWN/LR.x/V03.01//Auslieferung/2015-06-03/en

copyright by
LIEBHERR

1.67 Socket* in cab

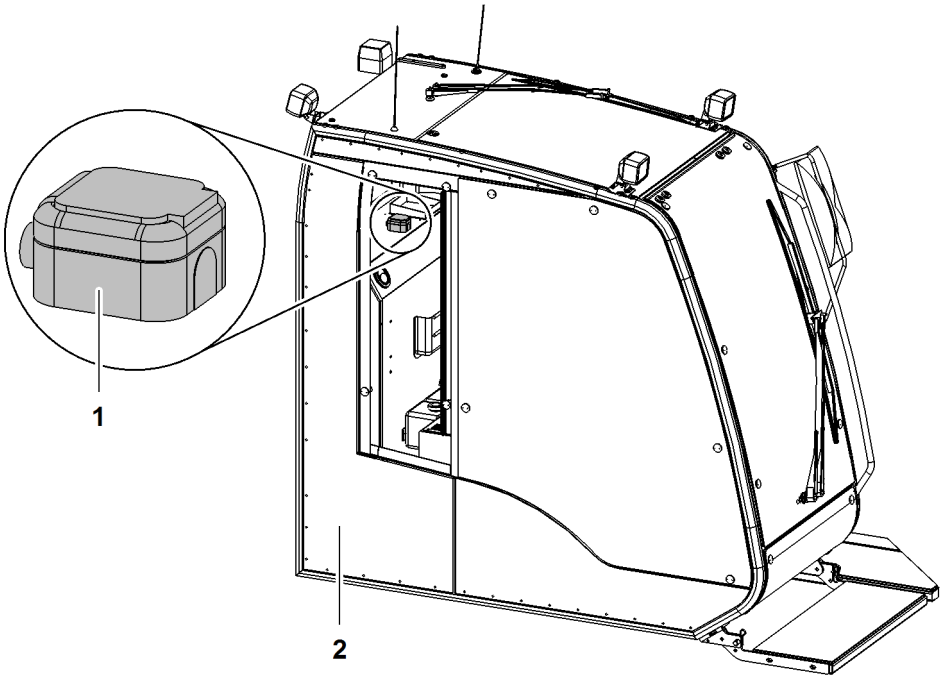

Fig. 520: Socket in cab*

1 Socket **2** Cab

The mains voltage socket is installed on the rear shelf in the cabin.

In order to use the socket in the cab the external power supply retrofit kit is also required.

The mains socket only works when the external feed is connected.

LWN/LR.x/V03.01//Auslieferung/2015-06-03/en

copyright by
LIEBHERR

1.68 Falling object protection* for cabin

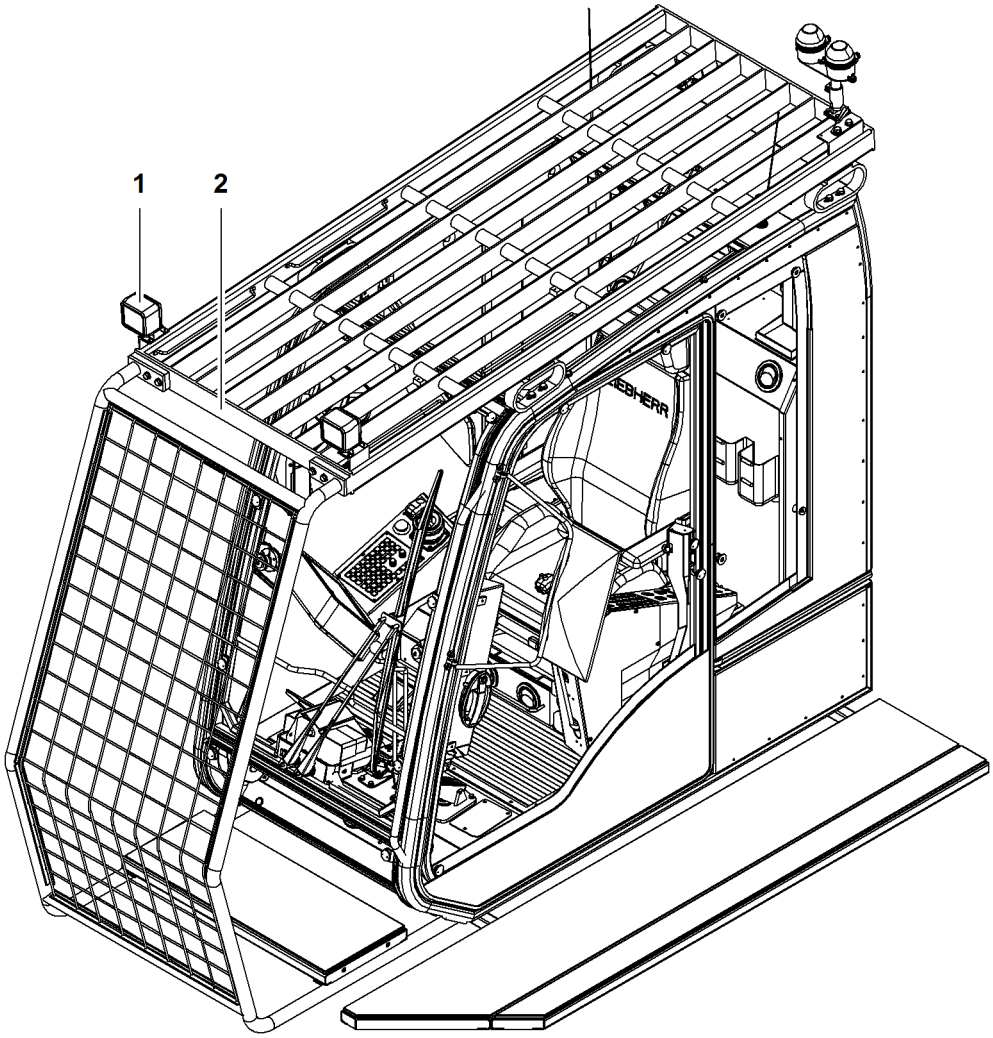

Fig. 521: Falling object protection for cabin

1 Floodlight (2x) **2** Falling object protection

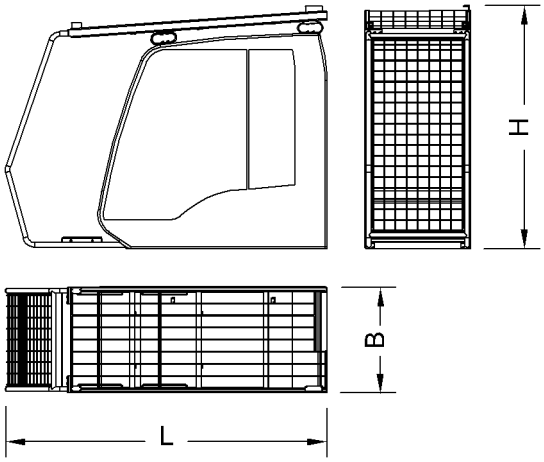

Fig. 522: Dimensions of falling object protection for cabin

LWN/LR.x/V03.01//Auslieferung/2015-06-03/en

copyright by LIEBHERR

Name		Value
L	Length	2889 mm 9‘ 6“ ft-in
W	Width	945 mm 3‘ 1“ ft-in
H	Height	2184 mm 7‘ 2“ ft-in
Weight		167 kg 368 lb

Tab. 310: Technical data: falling object protection for cabin

LWN/LR.x/V03.01//Auslieferung/2015-06-03/en

copyright by
LIEBHERR

1.69 Vandalism protection*

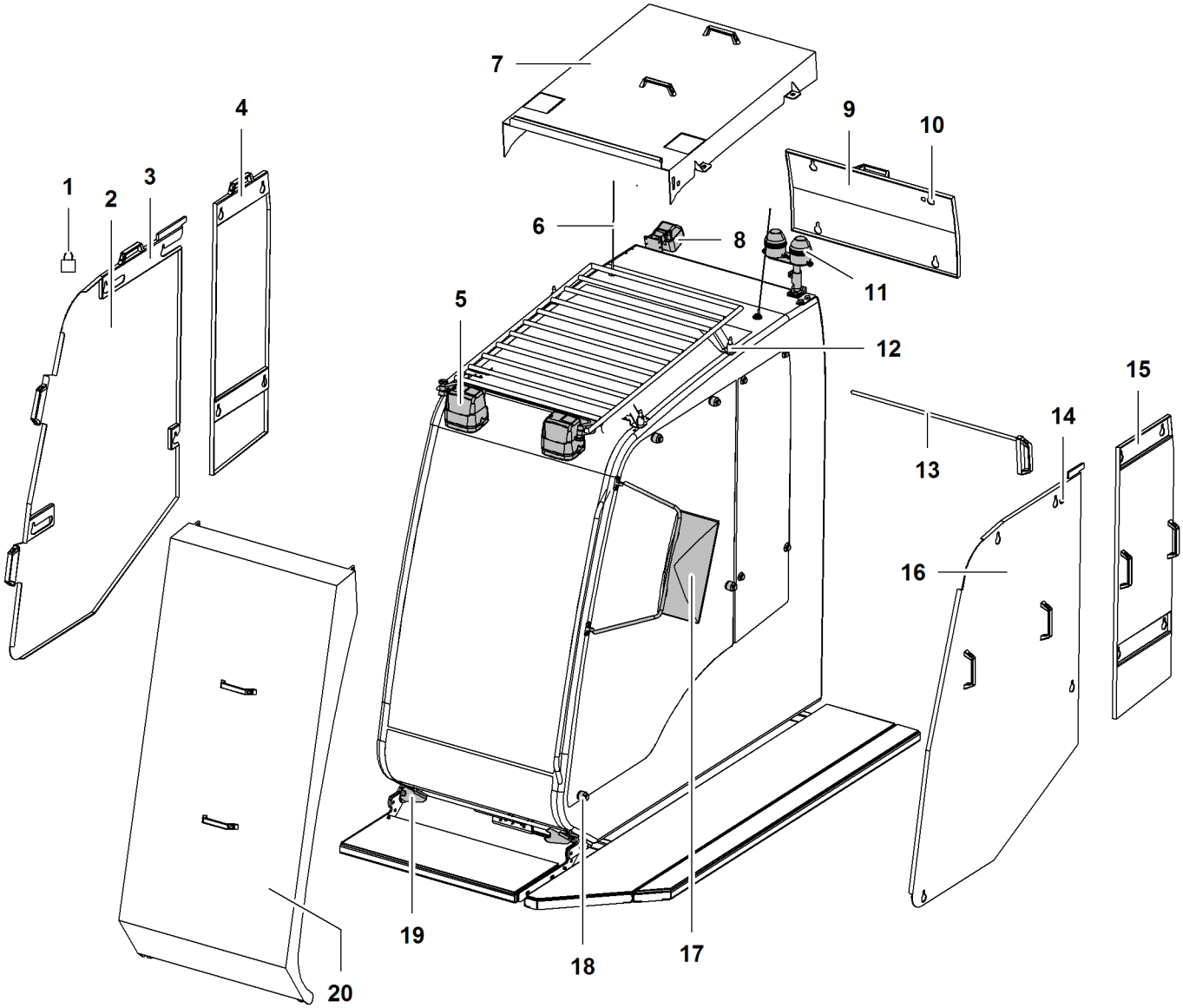

Fig. 523: Vandalism protection

1	Padlock	**8**	Rear floodlight	**15**	Left rear cover
2	Right front cover	**9**	Rear cover	**16**	Left front cover
3	Lock	**10**	Lock	**17**	Side mirror
4	Right rear cover	**11**	Flashing light/load moment limiter lamp	**18**	Suspension equipment (8x)
5	Front floodlight (2x)	**12**	Bracket (4x) for top cover	**19**	Bracket (2x) for front cover
6	Antenna (2x)	**13**	Barrier rod	**20**	Front cover
7	Top cover	**14**	Lock		

LWN/LR.x/V03.01//Auslieferung/2015-06-03/en

copyright by
LIEBHERR

1.69.1 Top cover

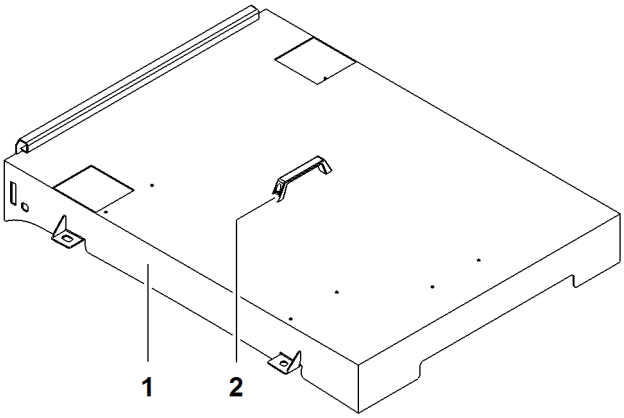

Fig. 524: Top cover

1 Top cover **2** Carrier handle

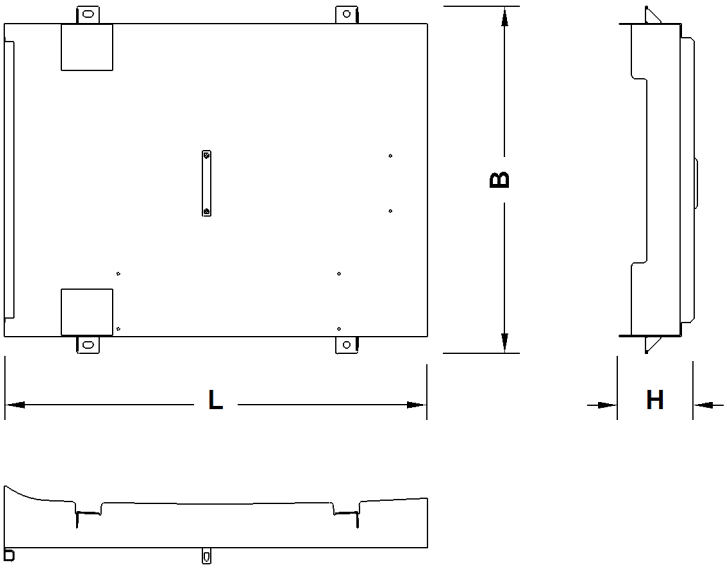

Fig. 525: Dimensions top cover

Name		Value
L	Length	1150 mm 3‘ 9“ ft-in
B	Width	944 mm 3‘ 1“ ft-in
H	Height	212 mm 8.35“ in
Weight		11 kg 24.25 lb

Tab. 311: Technical data top cover

LWN/LR.x/V03.01//Auslieferung/2015-06-03/en

copyright by
LIEBHERR

1.69.2 Rear cover

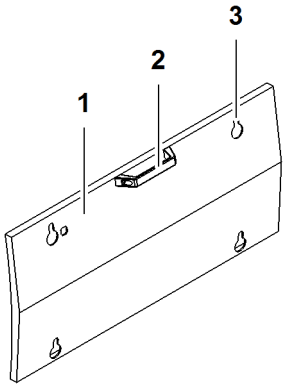

Fig. 526: Rear cover

1 Rear cover
2 Carrier handle
3 Suspension equipment (4x)

The lock for locking is not illustrated.

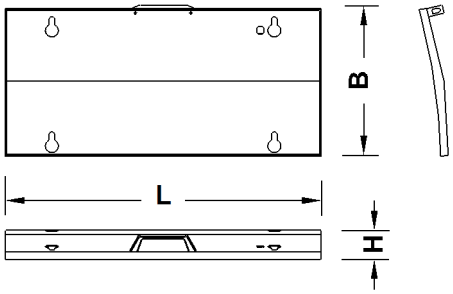

Fig. 527: Dimensions rear cover

Name		Value
L	Length	850 mm 2‘ 9“ ft-in
B	Width	408 mm 1‘ 4“ ft-in
H	Height	79 mm 3.11“ in
Weight		3 kg 6.61 lb

Tab. 312: Technical data rear cover

LWN/LR.x/V03.01//Auslieferung/2015-06-03/en

copyright by
LIEBHERR

1.69.3 Front cover

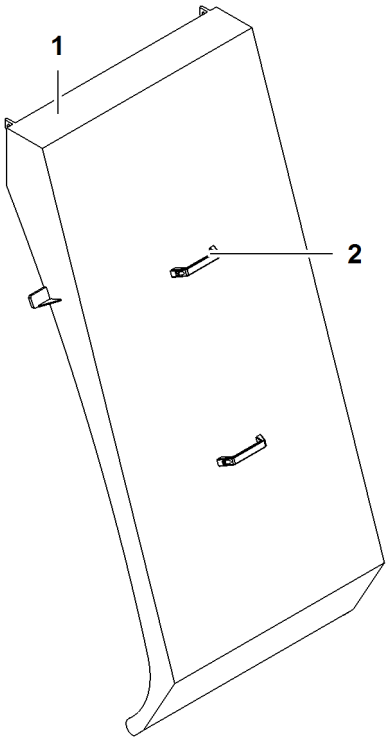

Fig. 528: Front cover

1 Front cover

2 Carrier handle (2x)

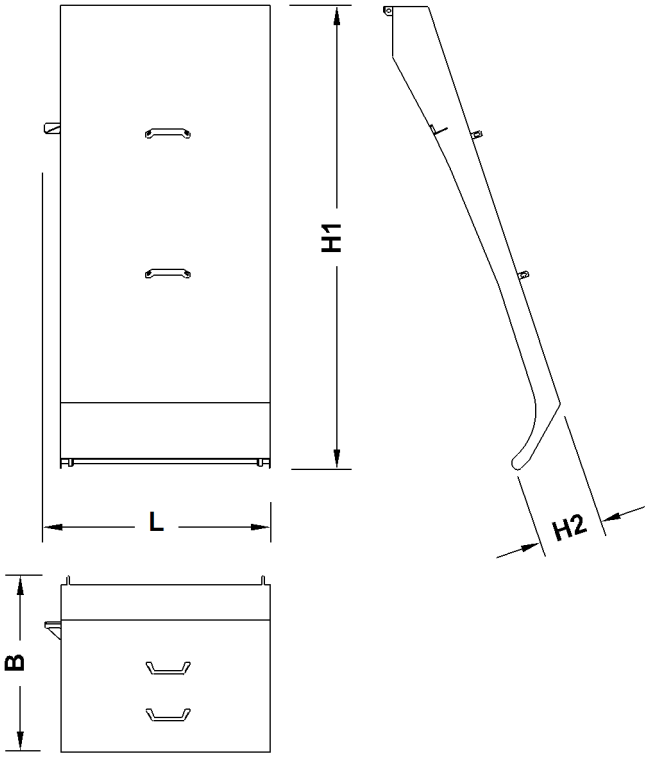

Fig. 529: Dimensions front cover

LWN/LR.x/V03.01//Auslieferung/2015-06-03/en

Name		Value
L	Length	915 mm 3‘ ft-in
B	Width	717 mm 2‘ 4“ ft-in
H1	Height	1880 mm 6‘ 2“ ft-in
H2	Height	264 mm 10.39“ in
Weight		19 kg 41.89 lb

Tab. 313: Technical data front cover

1.69.4 Right front cover

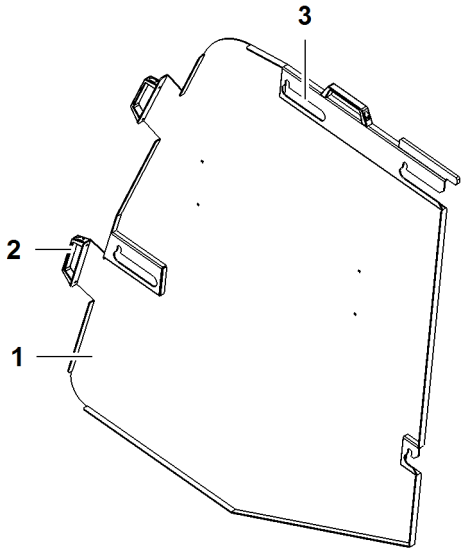

Fig. 530: Right front cover

1 Right front cover
2 Carrier handle (3x)
3 Suspension equipment (4x)

The lock for locking is not illustrated.

LWN/LR.x/V03.01//Auslieferung/2015-06-03/en

copyright by
LIEBHERR

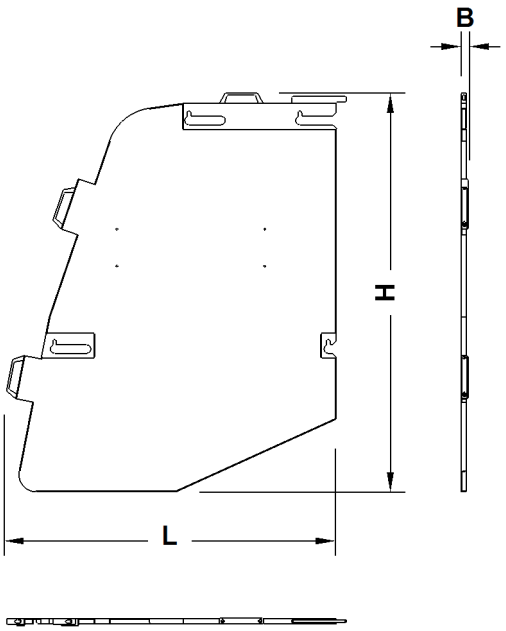

Fig. 531: Dimensions right front cover

Name		Value
L	Length	1377 mm 4‘ 6“ ft-in
B	Width	29 mm 1.14“ in
H	Height	1605 mm 5‘ 3“ ft-in
Weight		14 kg 30.86 lb

Tab. 314: Technical data right front cover

LWN/LR.x/V03.01//Auslieferung/2015-06-03/en

1.69.5 Right rear cover

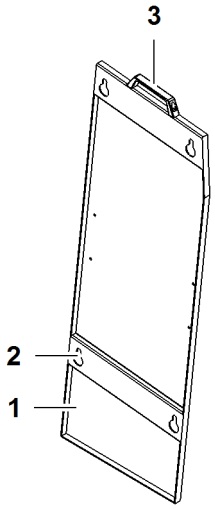

Fig. 532: Right rear cover

1 Right rear cover
2 Suspension equipment (4x)
3 Carrier handle

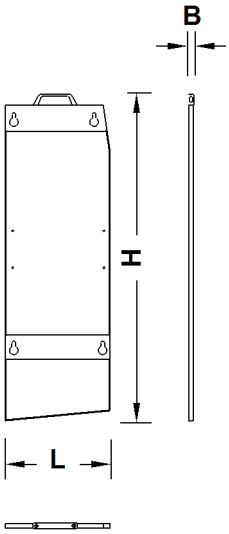

Fig. 533: Dimensions right rear cover

Name		Value
L	Length	425 mm 1‘ 5“ ft-in
B	Width	23 mm 0.91“ in
H	Height	1323 mm 4‘ 4“ ft-in
Weight		5 kg 11.02 lb

Tab. 315: Technical data right rear cover

LWN/LR.x/V03.01//Auslieferung/2015-06-03/en

copyright by
LIEBHERR

1.69.6 Left front cover

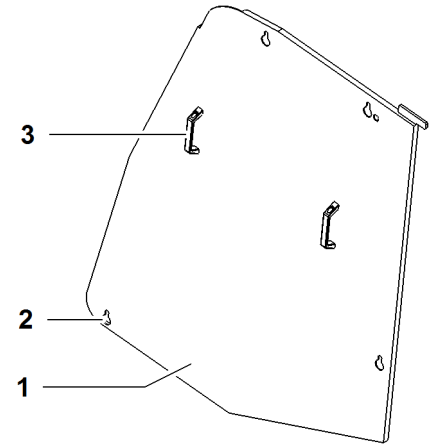

Fig. 534: Left front cover

1 Left front cover
2 Suspension equipment (4x)
3 Carrier handle (2x)

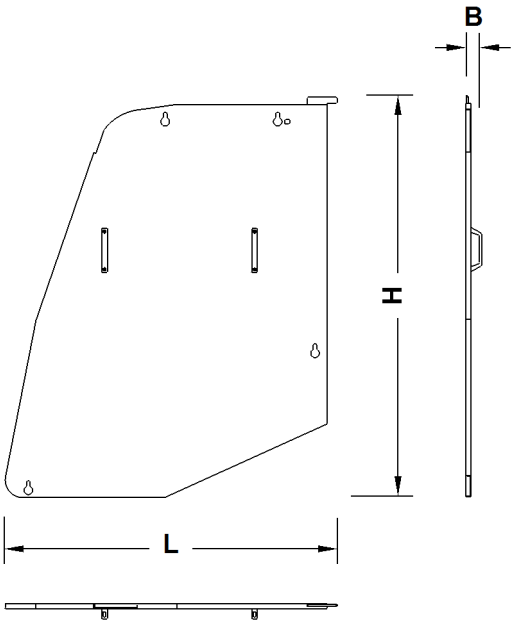

Fig. 535: Dimensions left front cover

Name		Value
L	Length	1327 mm 4‘ 4“ ft-in
B	Width	63 mm 2.48“ in
H	Height	1605 mm 5‘ 3“ ft-in
Weight		14 kg 30.86 lb

Tab. 316: Technical data left front cover

LWN/LR.x/V03.01//Auslieferung/2015-06-03/en

1.69.7 Left rear cover

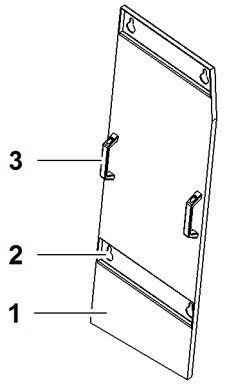

Fig. 536: Left rear cover

1 Left rear cover
2 Suspension equipment (4x)
3 Carrier handle (2x)

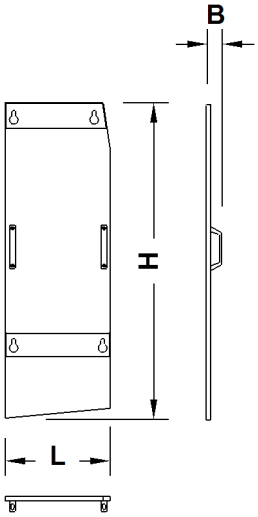

Fig. 537: Dimensions left rear cover

Name		Value
L	Length	425 mm 1‘ 5“ ft-in
B	Width	63 mm 2.48“ in
H	Height	1280 mm 4‘ 2“ ft-in
Weight		5 kg 11.02 lb

Tab. 317: Technical data left rear cover

LWN/LR.x/V03.01//Auslieferung/2015-06-03/en

copyright by
LIEBHERR

1.69.8 Brackets for front cover

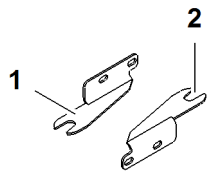

Fig. 538: Brackets for front cover

1 Bracket (2x) for front cover **2** Suspension equipment (2x)

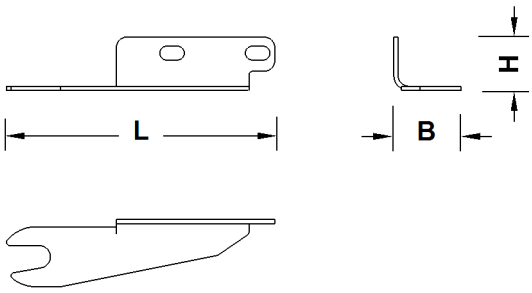

Fig. 539: Dimensions brackets for front cover

Name		Value
L	Length	250 mm 9.84“ in
B	Width	63 mm 2.48“ in
H	Height	50 mm 1.97“ in
Weight		0.5 kg 1.10 lb

Tab. 318: Technical data brackets for front cover

1.69.9 Barrier rod

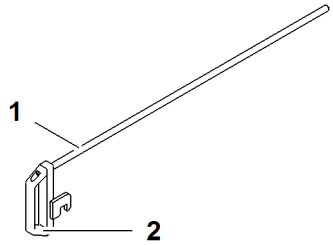

Fig. 540: Barrier rod

1 Barrier rod **2** Carrier handle

A padlock is supplied with the barrier rod **1**.

LWN/LR.x/V03.01//Auslieferung/2015-06-03/en

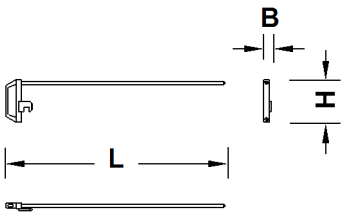

Fig. 541: Dimensions barrier rod

Name		Value
L	Length	913 mm 3‘ ft-in
B	Width	33 mm 1.30“ in
H	Height	178 mm 7.01“ in
Weight		1.8 kg 3.97 lb

Tab. 319: Technical data barrier rod

LWN/LR.x/V03.01//Auslieferung/2015-06-03/en

copyright by
LIEBHERR

1.70 Video monitoring system*

The video surveillance system is divided into:
– Video surveillance - basic device
– Video surveillance - boom

1.70.1 Cabin overview

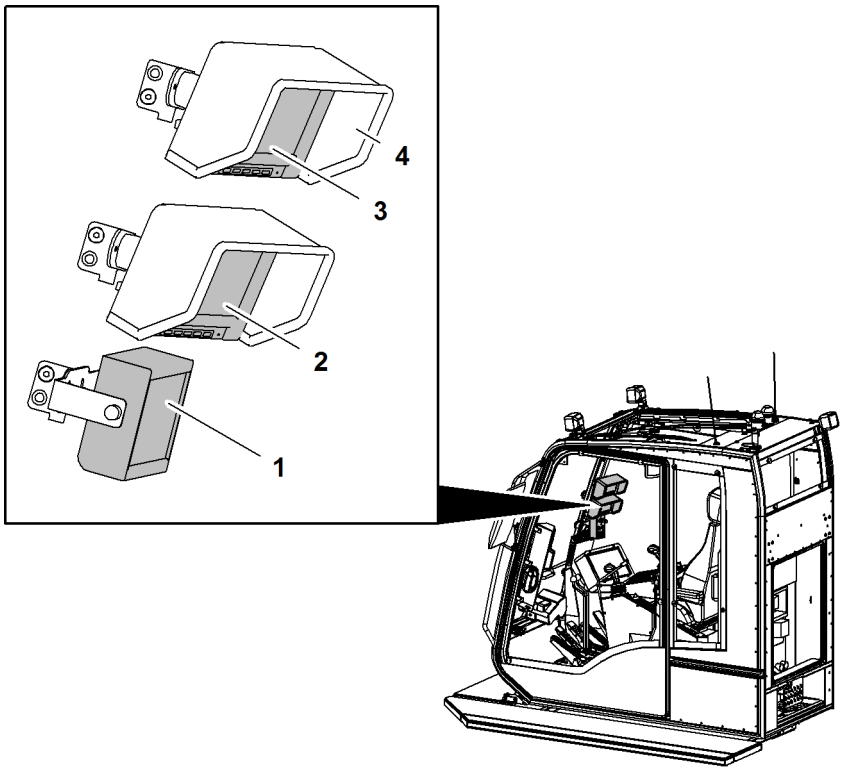

Fig. 542: Cabin overview

1	Control panel zoom camera	**3**	Monitor video surveillance - basic device
2	Monitor video surveillance - boom	**4**	Light protection cover

LWN/LR.x/V03.01//Auslieferung/2015-06-03/en

copyright by
LIEBHERR

1.70.2 Machine overview

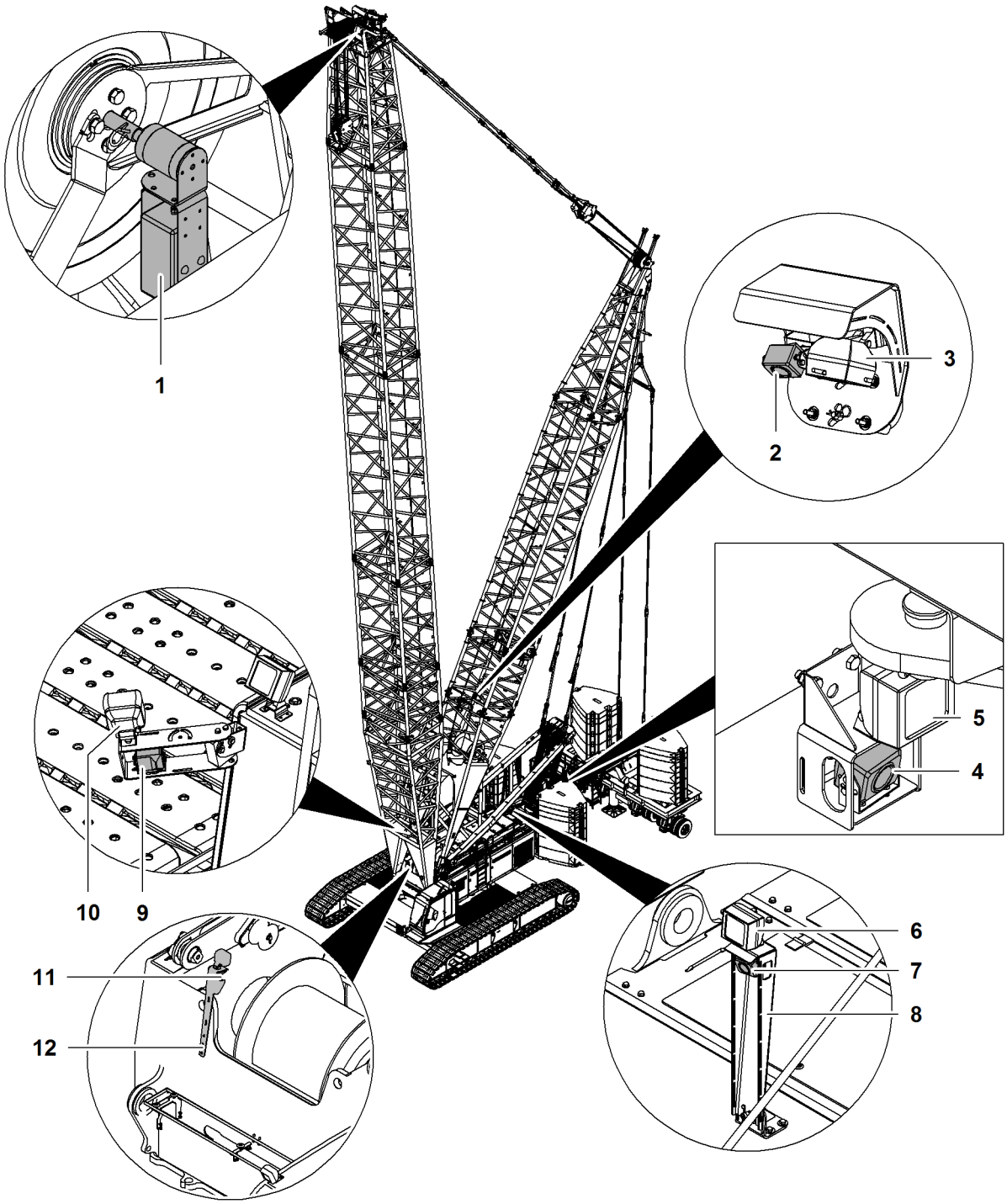

Fig. 543: Machine overview (illustration of principle)

1	Zoom camera in boom head	**5**	Floodlight	**9**	Floodlight
2	Derrick winch camera	**6**	Floodlight	**10**	Right camera
3	Floodlight	**7**	Camera winch1/winch2	**11**	Camera winch1/winch2
4	Rearview camera/counter-weight carriage	**8**	Mount	**12**	Bracket with floodlight

Either camera winch1/winch2 **7** or camera winch1/winch2 **11** are installed.

LWN/LR.x/V03.01//Auslieferung/2015-06-03/en

copyright by
LIEBHERR

Name	Monitor	Camera
Video surveillance - basic device	Quad monitor	Right camera **10**
		Rearview camera/counter-weight carriage **4**
		Camera winch1/winch2 **7** or camera winch1/winch2 **11**
		Derrick winch camera **2**
Video surveillance - boom	Quad monitor with control panel	Zoom camera **1**

Tab. 320: Overview of video surveillance system

1.70.3 Video surveillance - basic device

Up to four cameras are connected directly to the monitor.

Video surveillance system basic device consists of:
– Quad monitor
– Camera

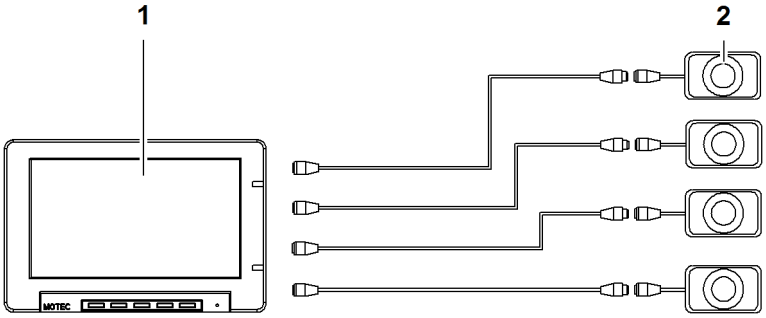

Fig. 544: Diagram video surveillance system basic device

1 Quad monitor in cabin **2** Camera (max. 4x)

LWN/LR.x/V03.01//Auslieferung/2015-06-03/en

Angle of view on the side

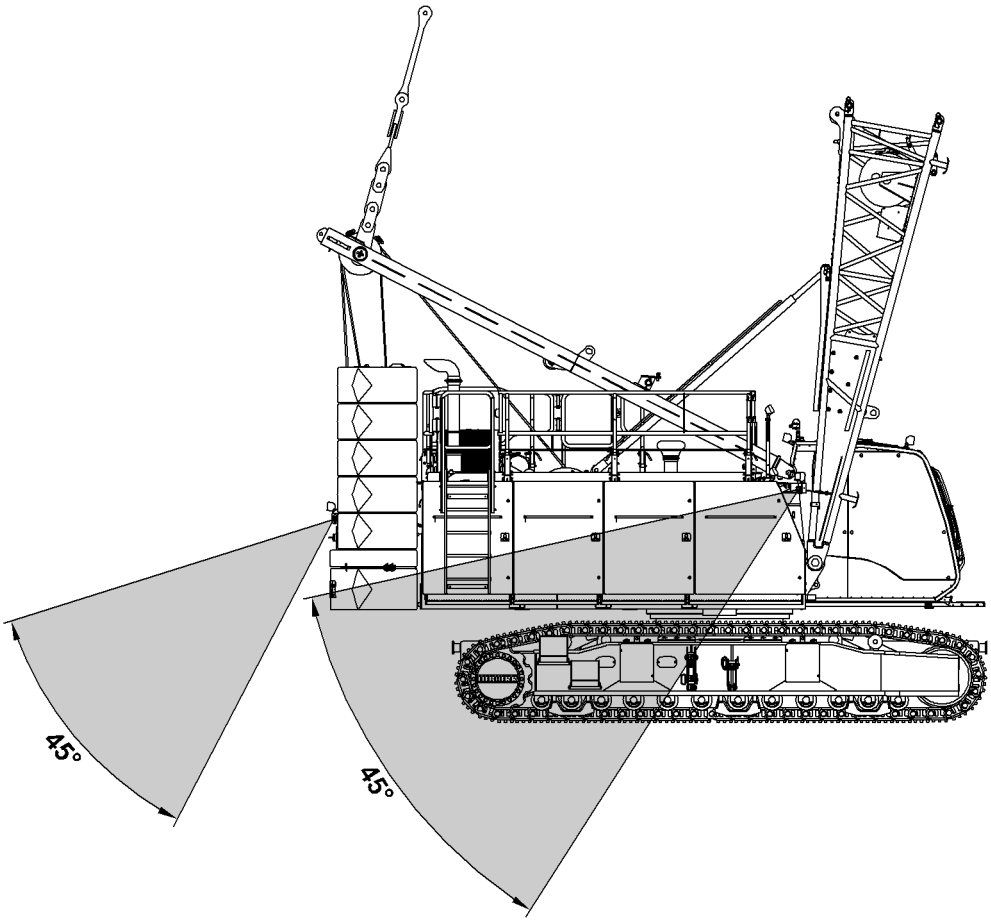

Fig. 545: Angle of view camera right and camera reverse drive/counterweight carriage (illustration of principle)

LWN/LR.x/V03.01//Auslieferung/2015-06-03/en

copyright by
LIEBHERR

Angle of view rear

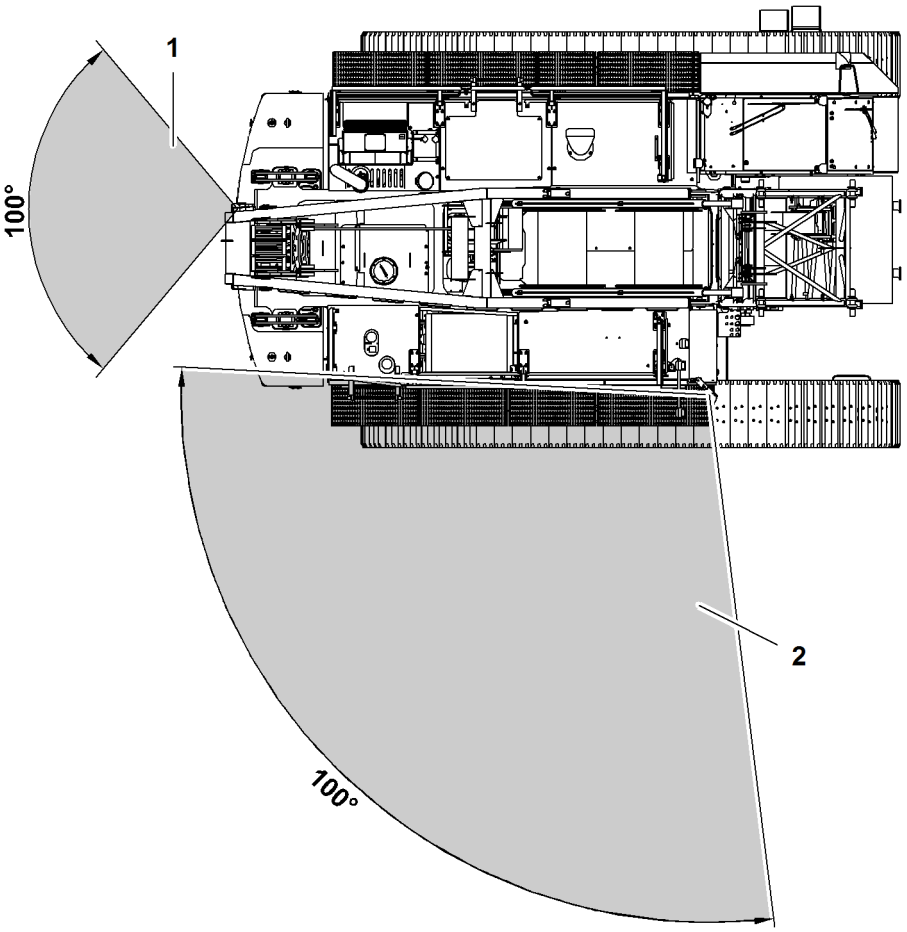

Fig. 546: Angle of view camera right and camera reverse drive/counterweight carriage (illustration of principle)

1.70.4 Video surveillance - boom

Only one camera is connected. This camera is located at the boom head.

The boom video surveillance system device consists of:
- Quad monitor
- Control panel
- Zoom camera

LWN/LR.x/V03.01//Auslieferung/2015-06-03/en

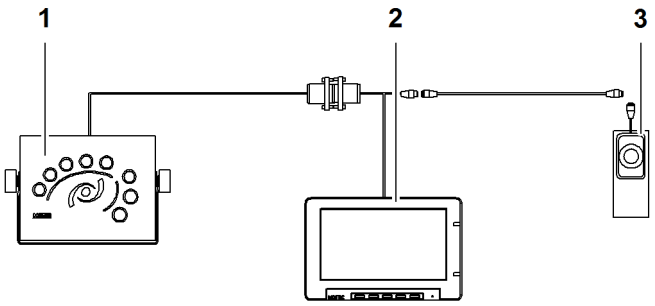

Fig. 547: Diagram boom video surveillance

1 Control panel
2 Quad monitor in cabin
3 Zoom camera

1.70.5 Quad monitor

Contained in the kit:
– Color monitor
– Mount with ball joint
– Light protection cover

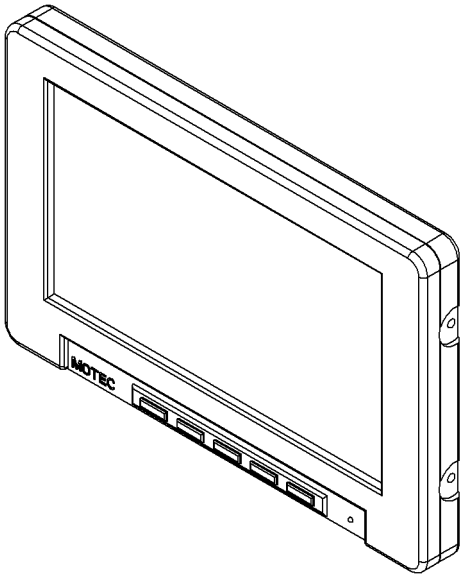

Fig. 548: Quad monitor

LWN/LR.x/V03.01//Auslieferung/2015-06-03/en

copyright by
LIEBHERR

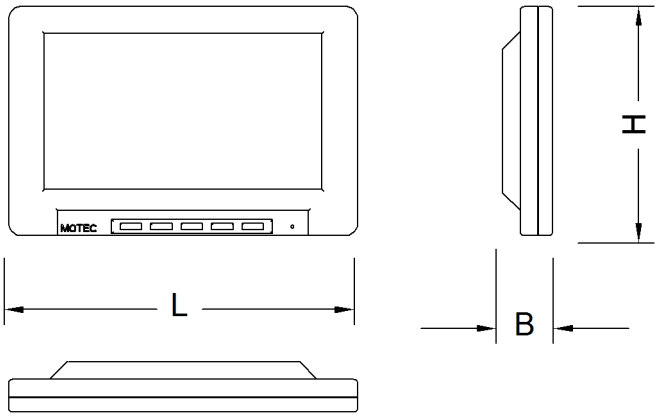

Fig. 549: Dimensions quad monitor

Name		Value
L	Length	195 mm 7.68“ in
B	Width	28 mm 1.10“ in
H	Height	128 mm 5.04“ in
Screen diagonal		17.8 cm 7.01“ in
Resolution		234 (v) x 1440 (h)
Nominal voltage		12 V
Power consumption (4 cameras)		max. 1,600 mA
Protection class		IP 30
Shock resistance		> 20 g
Operating temperature		-30 °C (-22 °F) to 80 °C (176 °F)
Storage temperature		-35 °C (-31 °F) to 85 °C (185 °F)
Weight		600 g 1.32 lb

Tab. 321: Technical data quad monitor

LWN/LR.x/V03.01//Auslieferung/2015-06-03/en

1.70.6 Camera

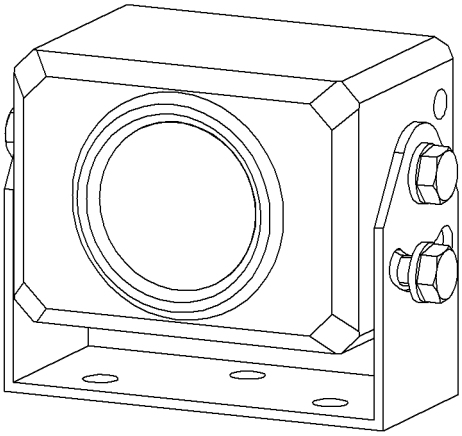

Fig. 550: Camera

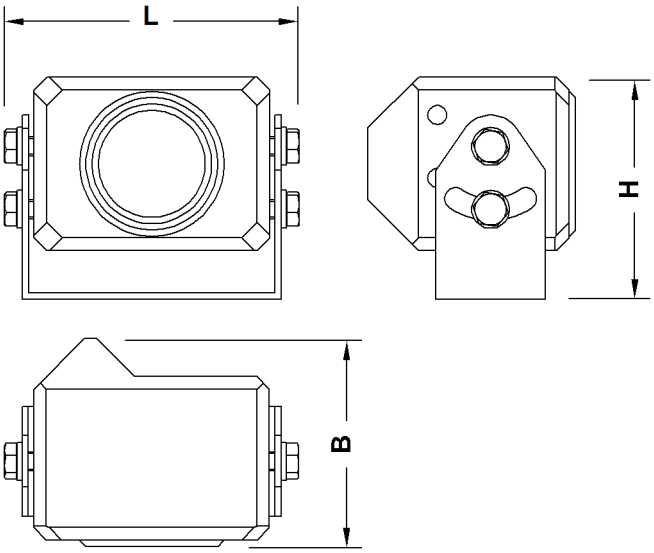

Fig. 551: Dimensions camera

Name		Value
L	Length	92 mm 3.62“ in
B	Width	61 mm 2.40“ in
H	Height	55 mm 2.17“ in
Resolution		320,000 pixels
Nominal voltage		12 V
Current consumption		0.25 A
Protection class		IP 69K
Shock resistance		> 50 g

LWN/LR.x/V03.01//Auslieferung/2015-06-03/en

copyright by
LIEBHERR

Name	Value
Operating temperature	-35 °C (-31 °F) to 75 °C (167 °F)
Storage temperature	-40 °C (-40 °F) to 80 °C (176 °F)
Windscreen heater	Automatically controlled
Brightness adjustment	Automatic

Tab. 322: Technical data camera

1.70.7 Control panel zoom camera

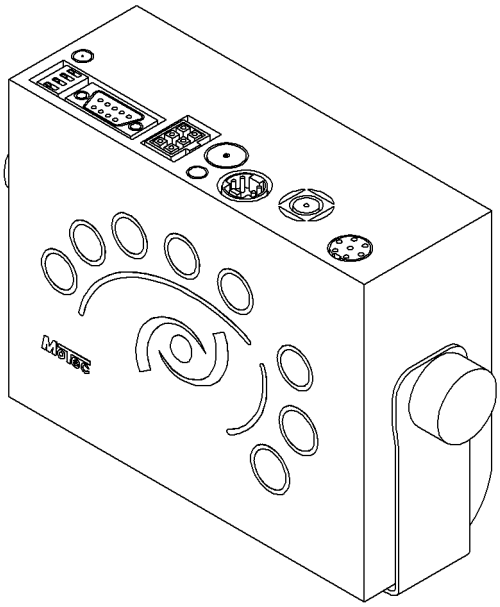

Fig. 552: Control panel zoom camera

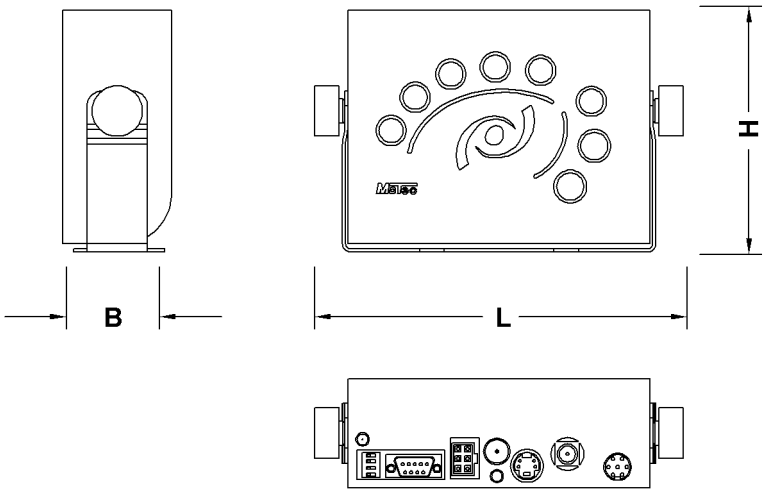

Fig. 553: Dimensions control panel zoom camera

LWN/LR.x/V03.01//Auslieferung/2015-06-03/en

Name		Value
L	Length	175 mm 6.89“ in
B	Width	54 mm 2.13“ in
H	Height	120 mm 4.72“ in
Nominal voltage		24 V
Current consumption		max. 0.5 A
Protection class		IP 54
Operating temperature		-30 °C (-22 °F) to 60 °C (140 °F)
Storage temperature		-40 °C (-40 °F) to 85 °C (185 °F)
Weight (without electric cable)		0.75 kg 1.65 lb

Tab. 323: Technical data control panel zoom camera

1.70.8 Zoom camera

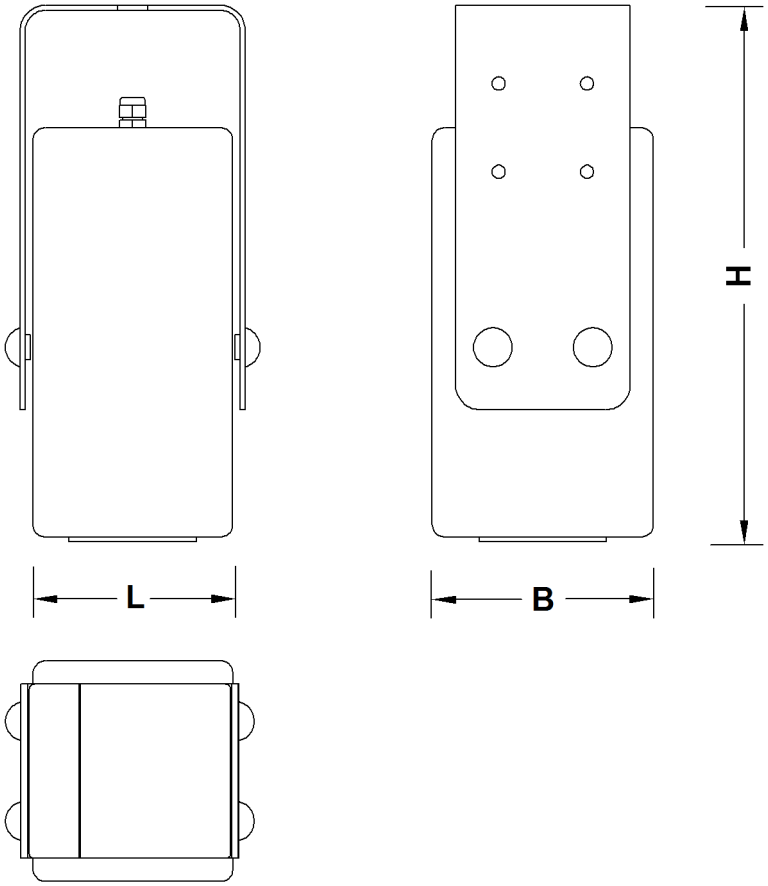

Fig. 554: Dimensions zoom camera

LWN/LR.x/V03.01//Auslieferung/2015-06-03/en

copyright by
LIEBHERR

Name		Value
L	Length	80 mm 3.15“ in
B	Width	90 mm 3.54“ in
H	Height	234 mm 9.21“ in
Resolution		440,000 pixels
Zoom factors		18 x optical, 12 x digital
Nominal voltage		24 V
Current consumption		max. 0.45 mA
Protection class		IP 68
Operating temperature		-35 °C (-31 °F) to 60 °C (140 °F)
Storage temperature		-40 °C (-40 °F) to 85 °C (185 °F)
Heating		Windscreen heater, electronically controlled. Activation point: < 15 °C (59 °F)
Weight (with tip mount)		5 kg 11.02 lb

Tab. 324: Technical data zoom camera

1.70.9 Mounts

The mounts are tip mounts.

A different mount may be required depending on the installation site of the zoom camera. There are three different mounts.

If the camera is transported to another installation site, the corresponding mount must be installed.

LWN/LR.x/V03.01//Auslieferung/2015-06-03/en

copyright by
LIEBHERR

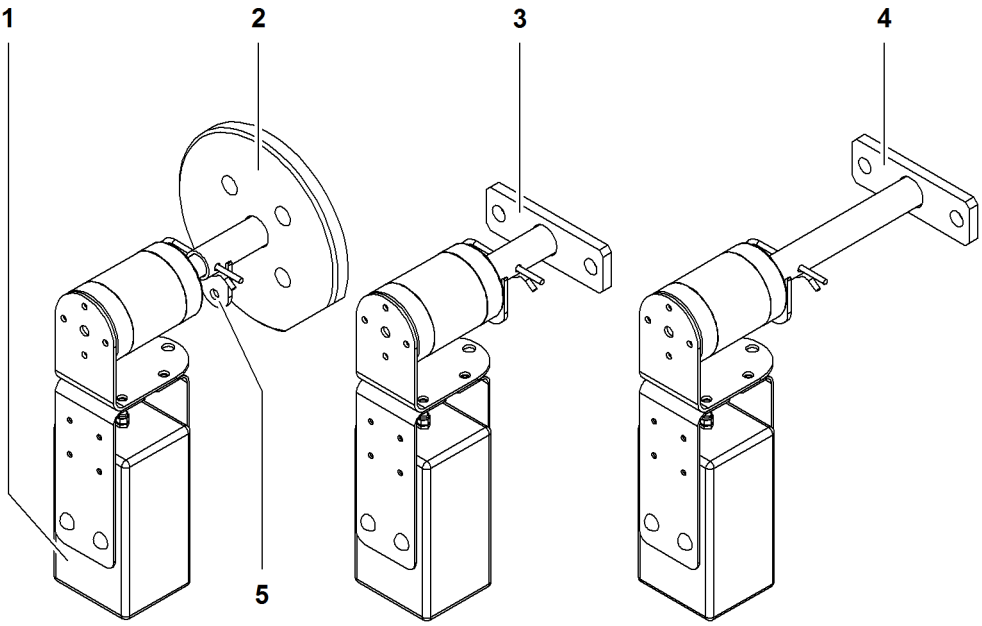

Fig. 555: Mounts A, B and C for zoom camera

1 Zoom camera
2 Mount A
3 Mount B
4 Mount C
5 Connecting link for securing chain

The chain for securing the camera is hooked into the connecting link **5** with a carabiner.

Mount A

Zoom camera with mount A is installed on:
– Main boom head 1311
– Main boom head 2017
– Main boom head 2018
– Main boom head 2220
– Main boom head 2320
– Main boom head 2821

The mount can be installed on the left or the right.

The axle support of the main boom head is exchanged for mount A here.

LWN/LR.x/V03.01//Auslieferung/2015-06-03/en

copyright by
LIEBHERR

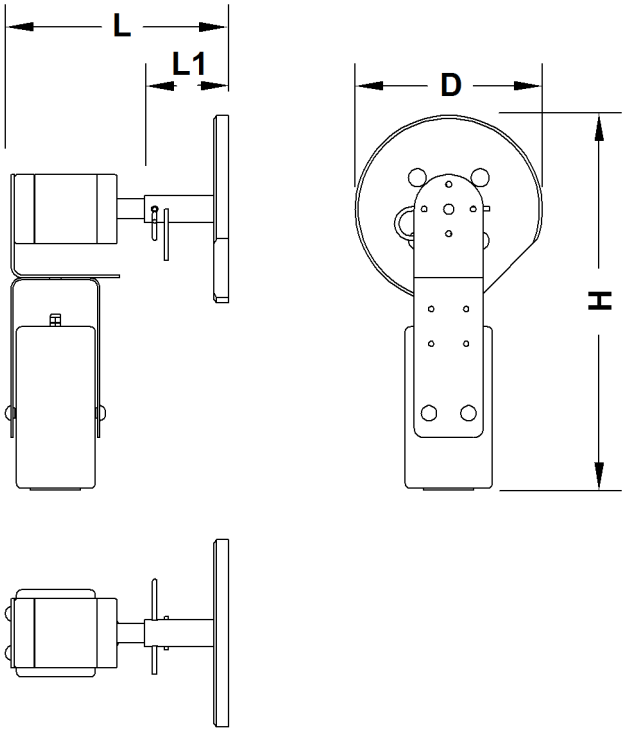

Fig. 556: Dimensions mount A

Name		Value
D	Diameter	190 mm 7.48“ in
L	Total length	227 mm 8.94“ in
L1	Length	85 mm 3.35“ in
H	Height	380 mm 1‘ 3“ ft-in

Tab. 325: Technical data mount A

Mount B

Zoom camera with mount B is installed on:
- Auxiliary jib 36 t (79,365 lb)
- Auxiliary jib 15 t (33,069 lb)
- Fixed jib head 0806
- Fixed jib head 1713
- Luffing jib head 1008
- Luffing jib head 1309
- Luffing jib head 1713
- Luffing jib head 1916
- Luffing jib head 2316

The mount can be installed on the left or the right.

With the auxiliary jib 36 t (79,365 lb), the mount is installed on the axle support.

With auxiliary jib 15 t (33,069 lb), a plate must be installed additionally.

An angle has to be installed additionally with fixed jib head 0806.

LWN/LR.x/V03.01//Auslieferung/2015-06-03/en

copyright by
LIEBHERR

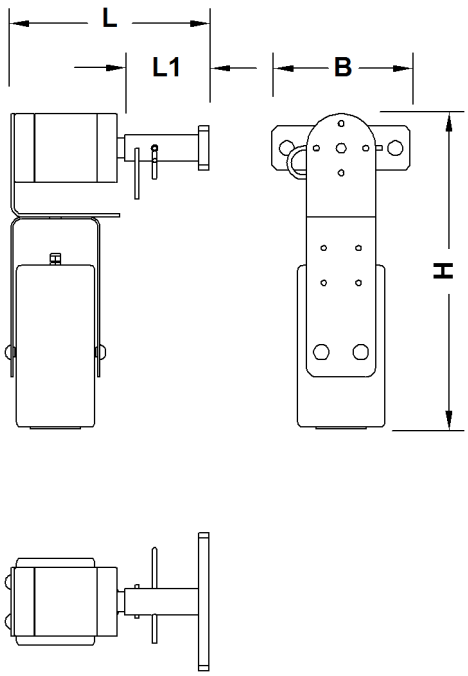

Fig. 557: Dimensions mount B

Name		Value
L	Total length	207 mm 8.15“ in
L1	Length	85 mm 3.35“ in
B	Width	140 mm 5.51“ in
H	Height	320 mm 1‘ 1“ ft-in

Tab. 326: Technical data mount B

Mount C

Zoom camera with mount C is installed on:
– Fixed jib head 0906
– Fixed jib head 1008
– Fixed jib head 1507

The mount can be installed on the left or the right.

An angle has to be installed additionally with fixed jib head 1008.

LWN/LR.x/V03.01//Auslieferung/2015-06-03/en

copyright by
LIEBHERR

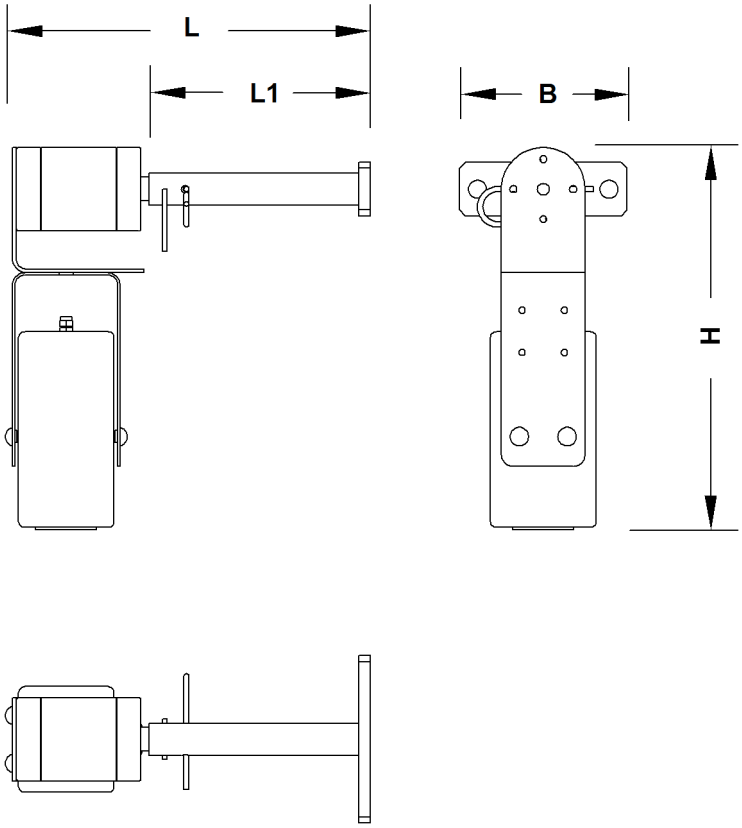

Fig. 558: Dimensions mount C

Name		Value
L	Total length	306 mm 1‘ ft-in
L1	Length	183 mm 7.20“ in
B	Width	140 mm 5.51“ in
H	Height	320 mm 1‘ 1“ ft-in

Tab. 327: Technical data mount C

LWN/LR.x/V03.01//Auslieferung/2015-06-03/en

Plate

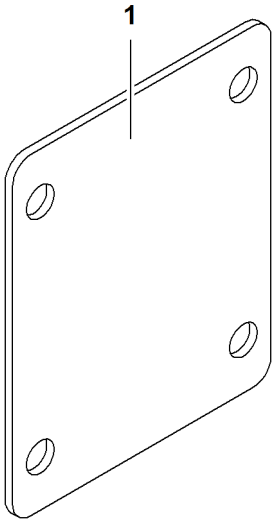

Fig. 559: Plate

1 Plate

Name		Value
L	Length	140 mm 5.51“ in
B	Width	4 mm 0.16“ in
H	Height	170 mm 6.69“ in

Tab. 328: Technical data plate

Angle

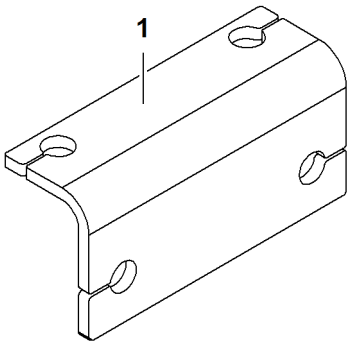

Fig. 560: Angle

1 Angle

Name		Value
L	Length	150 mm 5.91“ in

LWN/LR.x/V03.01//Auslieferung/2015-06-03/en

copyright by
LIEBHERR

Name		Value
B	Width	50 mm 1.97“ in
H	Height	70 mm 2.76“ in
Material thickness		6 mm 0.24“ in

Tab. 329: Technical data angle

1.70.10 Camera cable in main boom base section

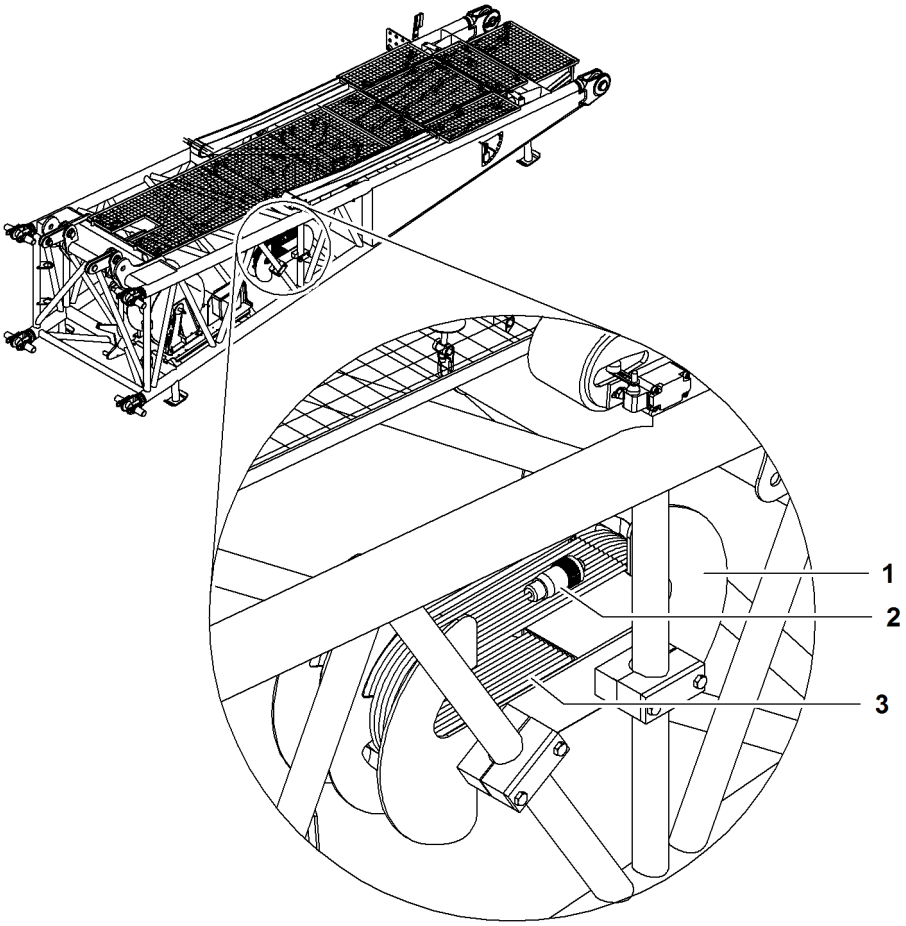

Fig. 561: Camera cable in main boom base section

1 Camera cable
2 Electric screw connection
3 Cable drum

A cable drum **3** with the camera cable **1** is located in the main boom base section. The electric screw connection **2** is guided into the uppercarriage with the electrics of the main boom base section.

Name	Value
Conductor resistance	< 76 mΩ/m
Capacity	< 80 pF/m

LWN/LR.x/V03.01//Auslieferung/2015-06-03/en

Name	Value
Operating temperature	-40 °C (-40 °F) to 70 °C (158 °F)
Bending radius	> 80 mm (3.15“ in)
Weight	approx. 0.82 kg/m (0.55 lb/ft)

Tab. 330: Technical data camera cable

1.70.11 Zoom camera in main boom head

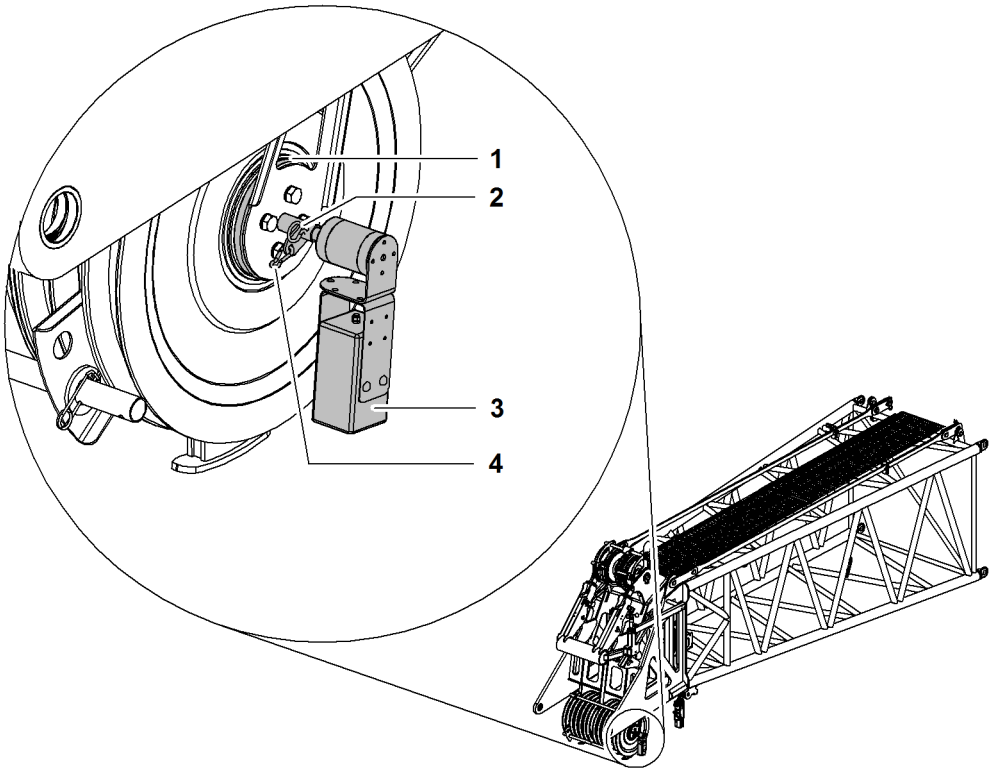

Fig. 562: Zoom camera in main boom head

1 Mount A
2 Spring cotter pin
3 Zoom camera
4 Carabiner

LWN/LR.x/V03.01//Auslieferung/2015-06-03/en

copyright by
LIEBHERR

1.70.12 Zoom camera in fixed jib head

Fixed jib head 1008

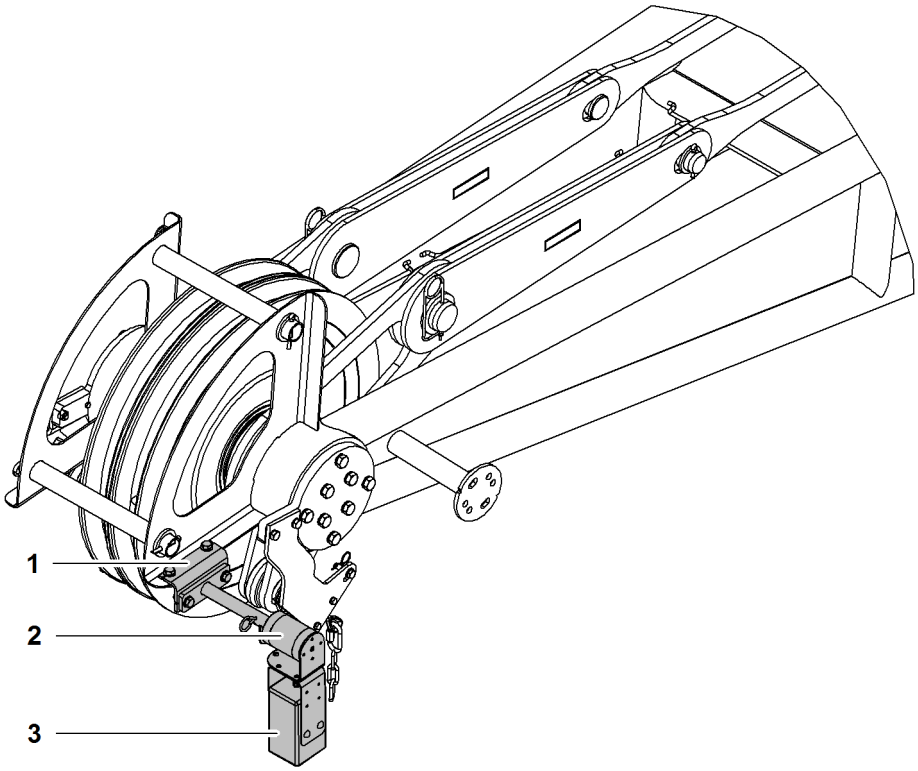

Fig. 563: Zoom camera in fixed jib head 1008

1 Angle
2 Mount C
3 Zoom camera

LWN/LR.x/V03.01//Auslieferung/2015-06-03/en

Fixed jib head 0906 and 1507

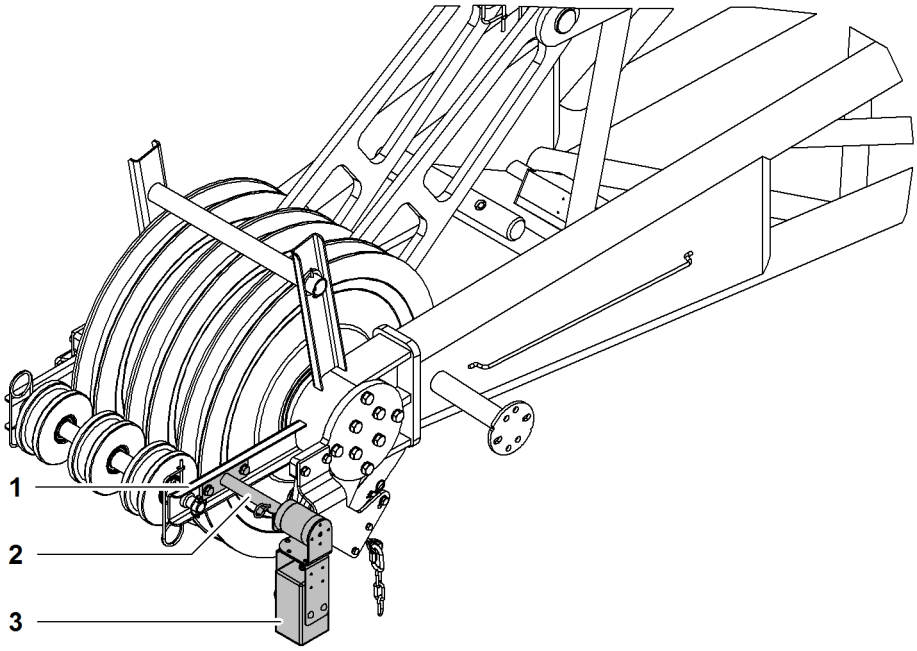

Fig. 564: Zoom camera in fixed jib head 0906 and 1507

1 Mount rope protection pulley set
2 Mount C
3 Zoom camera

LWN/LR.x/V03.01//Auslieferung/2015-06-03/en

copyright by
LIEBHERR

1.70.13 Zoom camera in luffing jib head

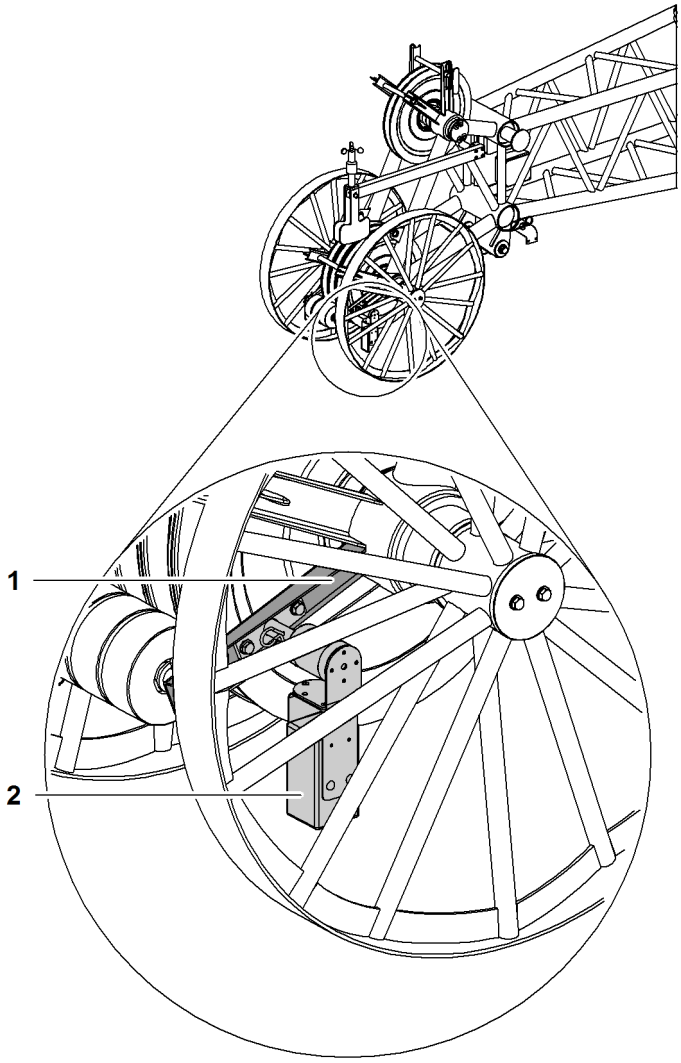

Fig. 565: Zoom camera in luffing jib head

1 Mount rope protection pulley set **2** Zoom camera with mount B

LWN/LR.x/V03.01//Auslieferung/2015-06-03/en

1.70.14 Zoom camera in auxiliary jib 36 t (79300 lb)

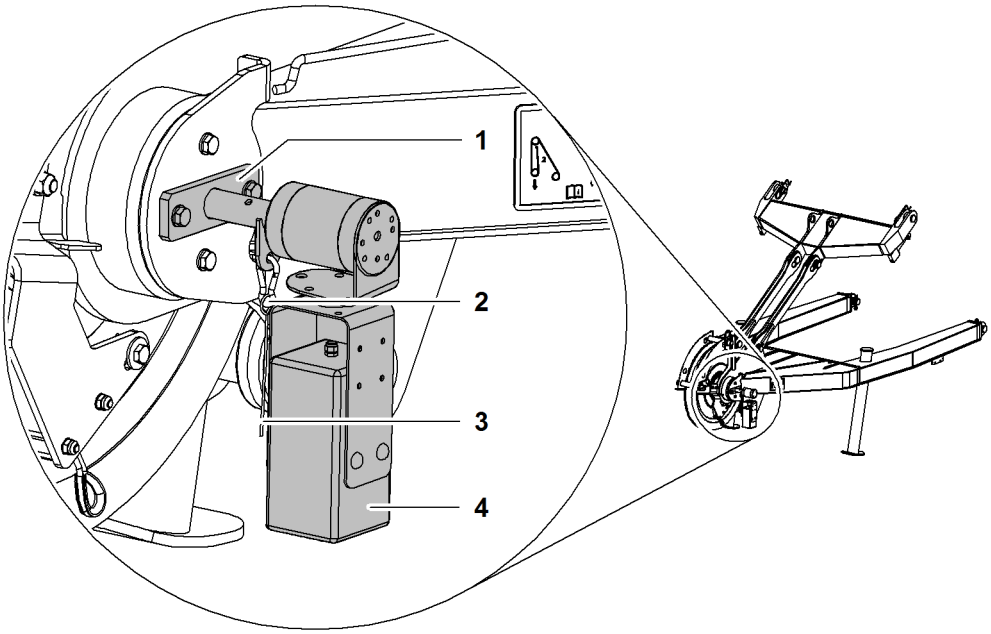

Fig. 566: Zoom camera in auxiliary jib 36 t (79300 lb)

1	Mount B	**3**	Securing chain
2	Carabiner	**4**	Zoom camera

1.70.15 Zoom camera in auxiliary jib 15 t (33000 lb)

The zoom camera in the auxiliary jib 15 t (33000 lb) is mounted with a plate on the jib head.

LWN/LR.x/V03.01//Auslieferung/2015-06-03/en

copyright by
LIEBHERR

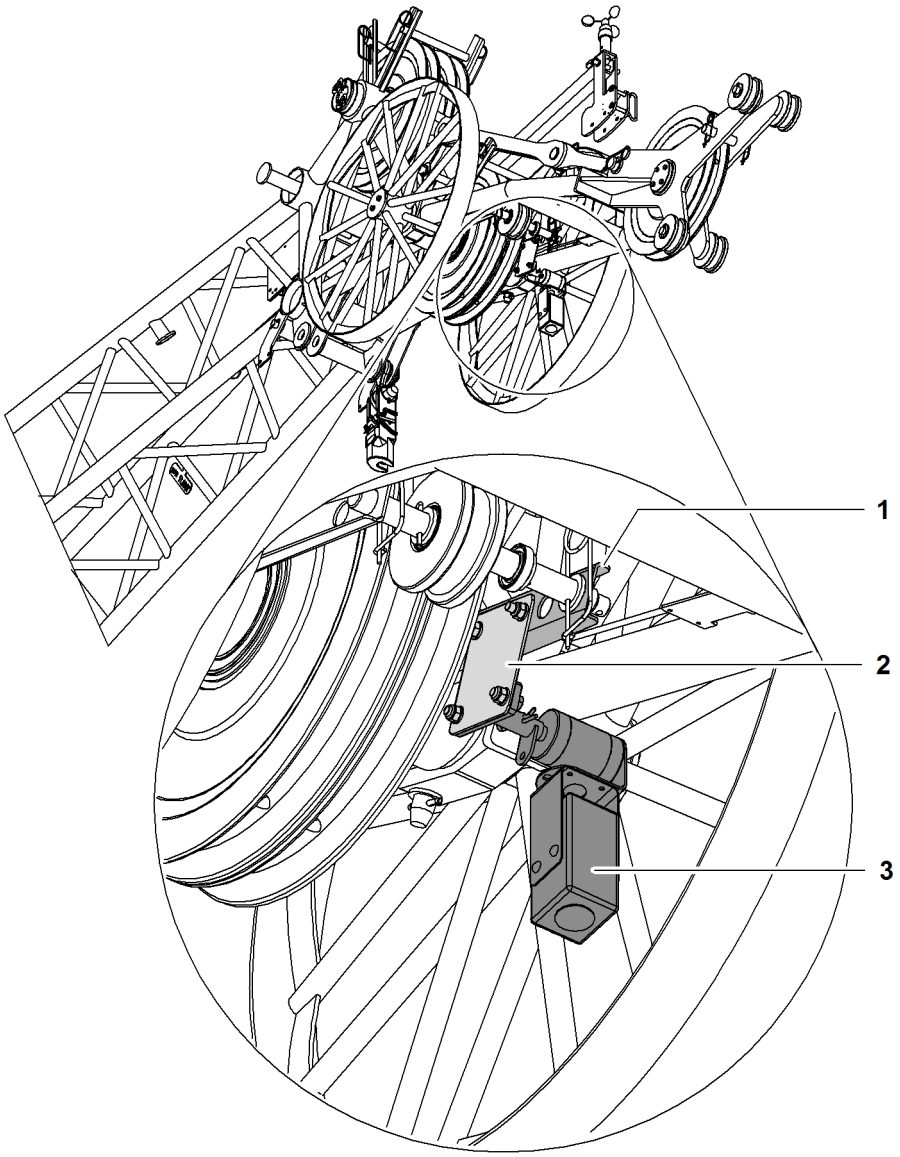

Fig. 567: Zoom camera in auxiliary jib 15 t (33000 lb)

1 Rope protection pipe mount
2 Plate
3 Zoom camera with mount B

LWN/LR.x/V03.01//Auslieferung/2015-06-03/en

1.70.16 Foot pedal* for zoom camera

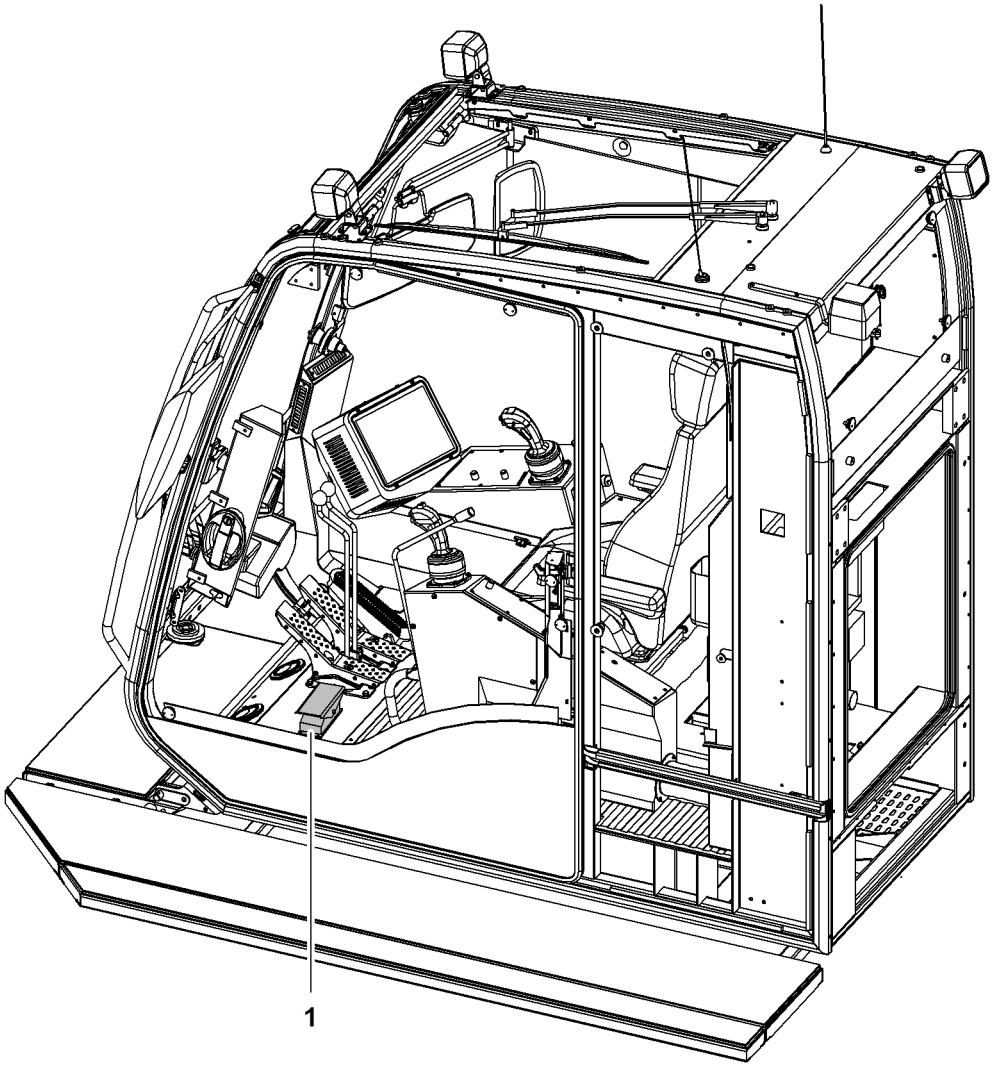

Fig. 568: Foot pedal for zoom camera*

1 Foot pedal

The camera zoom can be operated with the foot pedal **1** besides the control panel.

LWN/LR.x/V03.01//Auslieferung/2015-06-03/en

copyright by
LIEBHERR

1.71 Central lubrication system

The central lubrication system lubricates the swing ring bearing. With the corresponding retrofit kit, the swing ring tooth flank is also lubricated via the central lubrication system.

The central lubrication system's lubricating pump is located in the uppercarriage.

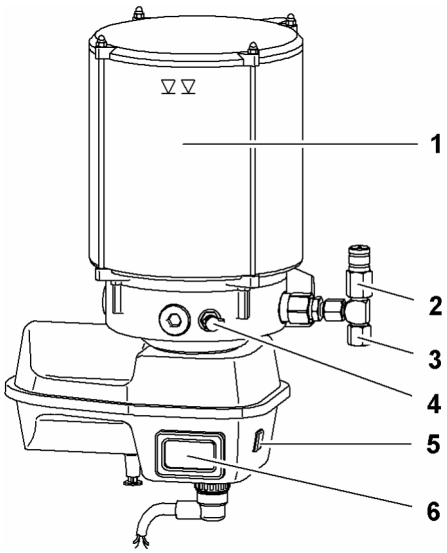

Fig. 569: Central lubrication system

1	Supply container	**4**	Filling nipple
2	Positive pressure relief valve	**5**	Button *Interim lubrication*
3	Pump outlet	**6**	Control unit

LWN/LR.x/V03.01//Auslieferung/2015-06-03/en

copyright by
LIEBHERR

1.72 Auxiliary floodlights*

The following auxiliary floodlights are available:
– Floodlights on uppercarriage
– Floodlights on cabin
– Adjustable floodlights on main boom base section
– Floodlights on main boom
– Floodlights on jib head

1.72.1 Floodlights on uppercarriage

The following illuminants are available:
– Halogen bulb H3
– LED

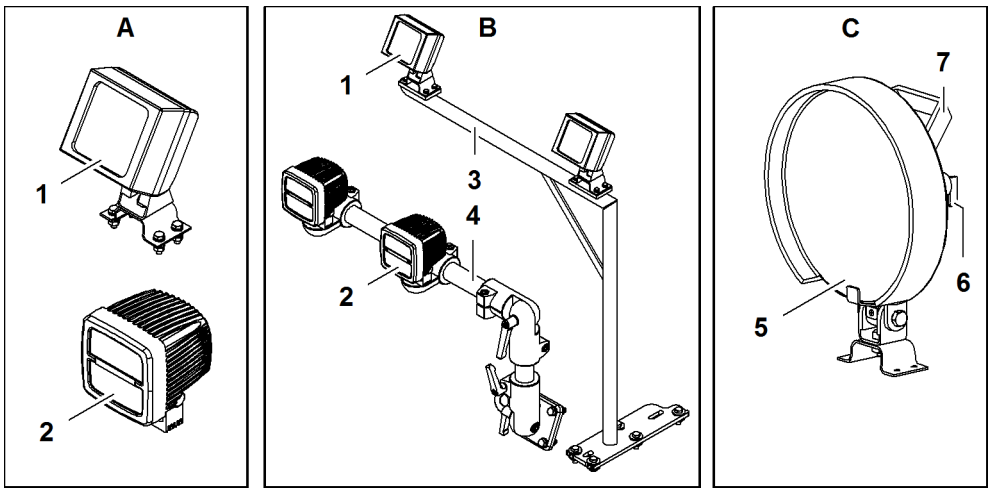

Fig. 570: Floodlights on uppercarriage

1	Floodlight with bulb H3	**6**	Switch
2	Floodlight with LED	**7**	Handle
3	Stayer	**A**	Floodlight on cabin
4	Stayer	**B**	Floodlight with frame
5	Search floodlight	**C**	Search floodlight

LWN/LR.x/V03.01//Auslieferung/2015-06-03/en

copyright by
LIEBHERR

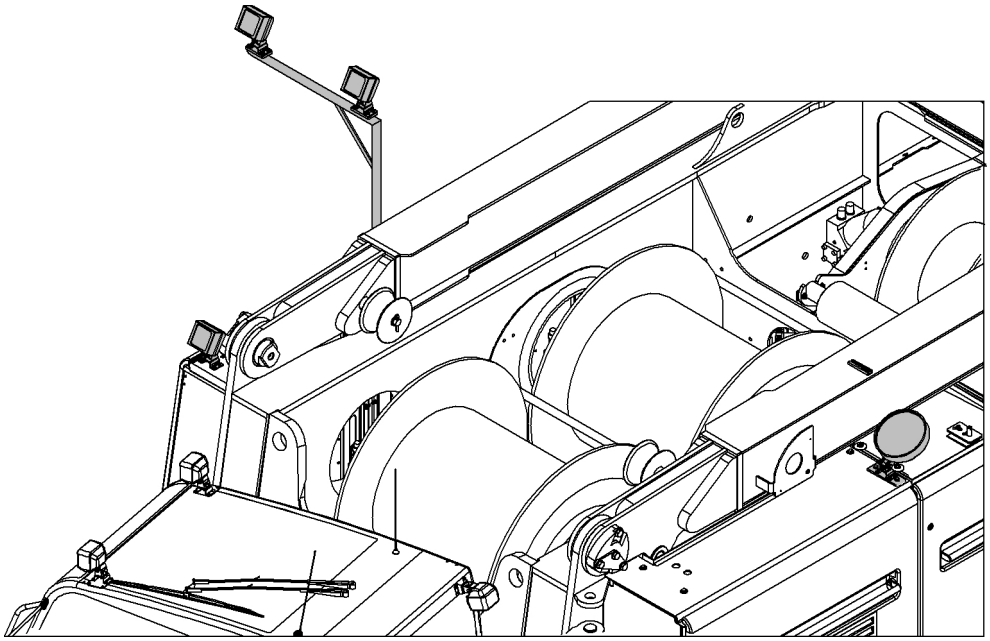

Fig. 571: Floodlights on uppercarriage

The exact installation position of the search floodlight varies according to machine type.

Name	Value
Illuminant	Halogen bulb H3
Weight of each floodlight	0.7 kg 1.54 lb
Power consumption per floodlight	70 W
Nominal voltage	24 V
Width of stayer	700 mm 2‘ 4“ ft-in
Height of stayer	700 mm 2‘ 4“ ft-in

Tab. 331: Technical data floodlight with bulb H3

Name	Value
Illuminant	LED
Weight per floodlight	1.5 kg 3.31 lb
Power consumption per floodlight	50 W
Nominal voltage	24 V
Width of stayer	700 mm 2‘ 4“ ft-in
Height of stayer	470 mm 1‘ 7“ ft-in

Tab. 332: Technical data floodlight with LED

LWN/LR.x/V03.01//Auslieferung/2015-06-03/en

copyright by
LIEBHERR

Name	Value
Illuminant	Halogen bulb H3
Weight	1.5 kg 3.31 lb
Power consumption	70 W
Nominal voltage	24 V

Tab. 333: Technical data search floodlight

LWN/LR.x/V03.01//Auslieferung/2015-06-03/en

copyright by
LIEBHERR

1.72.2 Floodlights on cabin

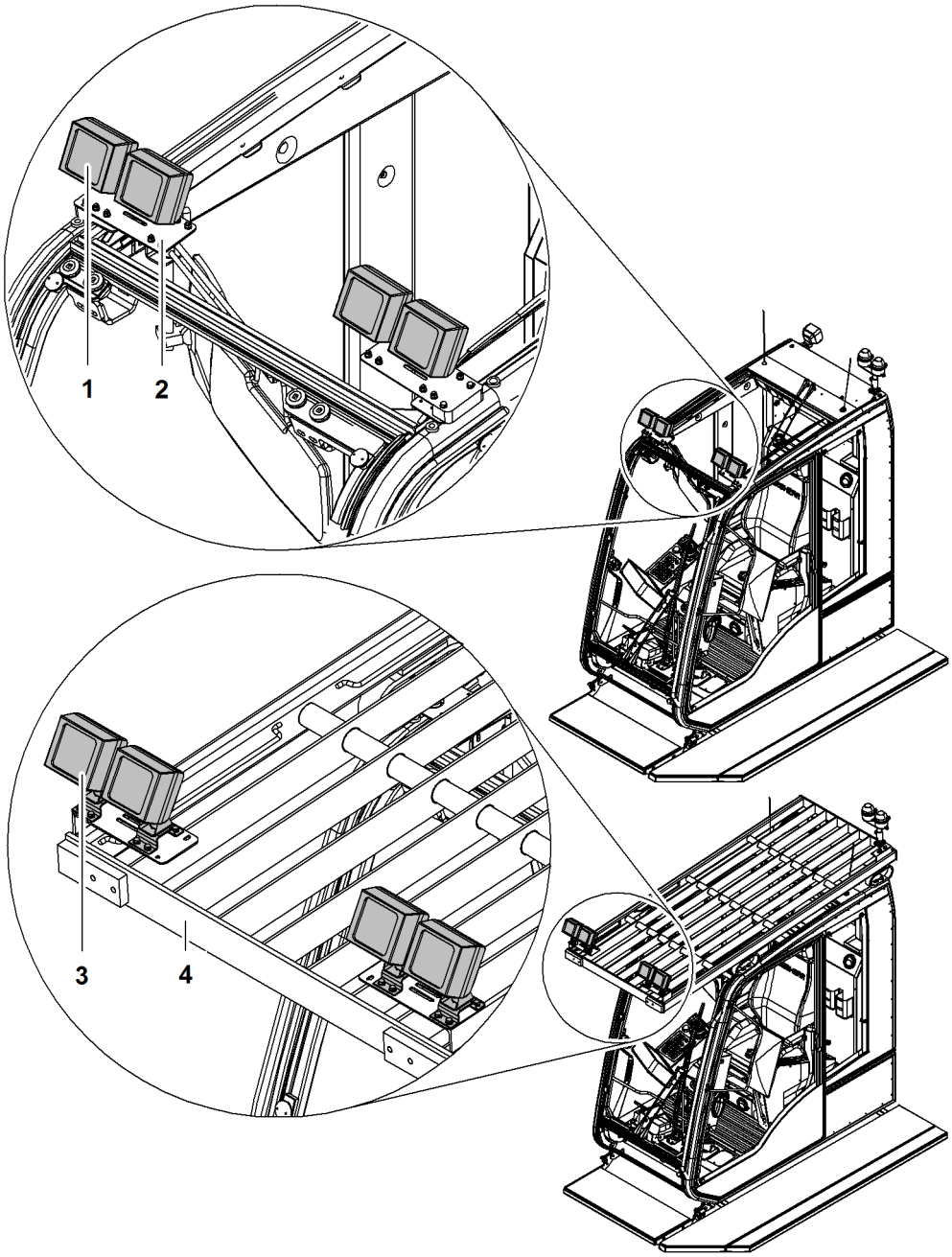

Fig. 572: Floodlights on cabin

1 Floodlight (4x)
2 Bracket (2x)
3 Floodlight (4x)
4 Falling object protection

Name	Value
Illuminant	Halogen bulb H3
Weight of each floodlight	0.7 kg 1.54 lb
Nominal voltage	24 V 24 V

LWN/LR.x/V03.01//Auslieferung/2015-06-03/en

copyright by
LIEBHERR

Name	Value
Power consumption per floodlight	70 W 70 W

Tab. 334: Technical data floodlight with bulb H3

Name	Value
Illuminant	LED
Weight of each floodlight	1.5 kg 3.31 lb
Nominal voltage	24 V 24 V
Power consumption per floodlight	50 W 50 W

Tab. 335: Technical data floodlight with LED

1.72.3 Adjustable floodlights on main boom base section

The following floodlights are available:
– Xenon gas discharge lamp
– LED

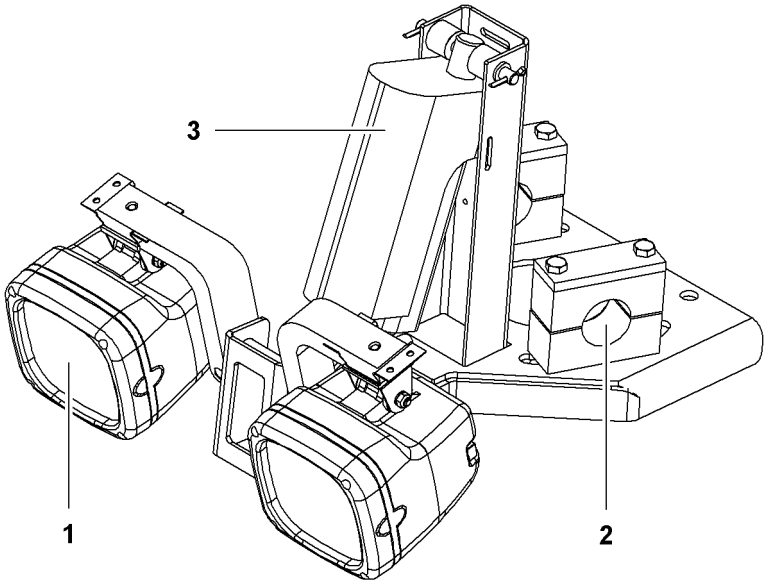

Fig. 573: Adjustable floodlights on main boom base section

1 Floodlights (2x)
2 Bracket (2x)
3 Variable displacement motor

The variable displacement motor **1** can be used to tilt the floodlights **3** by 141°.

LWN/LR.x/V03.01//Auslieferung/2015-06-03/en

copyright by
LIEBHERR

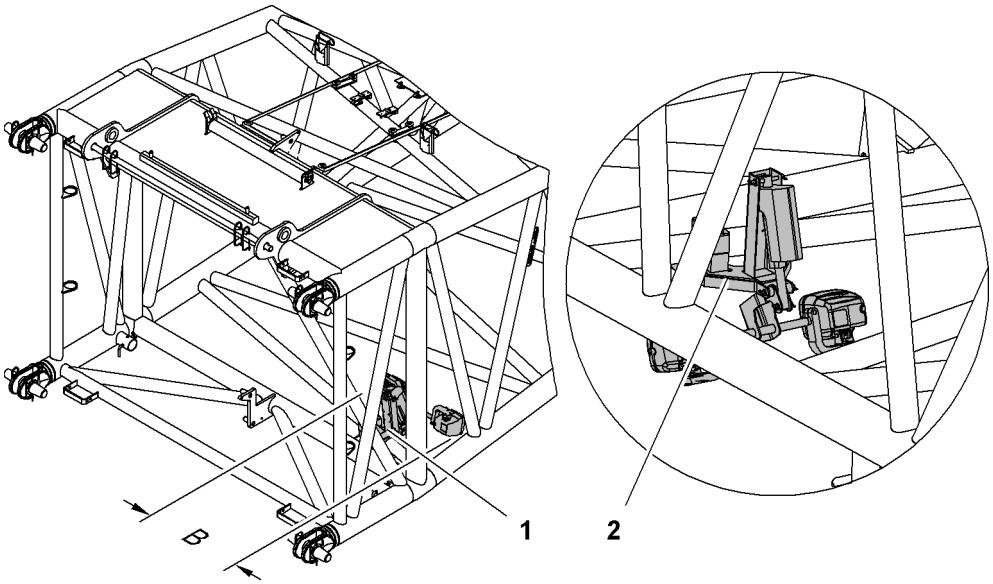

Fig. 574: Adjustable floodlights on main boom base section

1 Floodlight folded in **2** Floodlight folded out

The exact installation position of the floodlights varies according to machine type.

Name		Value
Illuminant		Xenon gas discharge lamp
B	Width	740 mm 2‘ 5“ ft-in
Weight		14.5 kg 31.97 lb
Nominal voltage		24 V
Power consumption per floodlight		42 W

Tab. 336: Technical data floodlight with xenon gas discharge lamp

Name		Value
Illuminant		LED
B	Width	668 mm 2‘ 2“ ft-in
Weight		15.5 kg 34.17 lb
Nominal voltage		24 V
Power consumption per floodlight		50 W

Tab. 337: Technical data floodlight with LED

1.72.4 Floodlights on main boom

The following floodlights are available at the main boom:
– High-pressure sodium vapor lamp
– LED floodlight

LWN/LR.x/V03.01/Auslieferung/2015-06-03/en

copyright by
LIEBHERR

High-pressure sodium vapor lamp

Several pairs of high-pressure sodium vapor lamps can be installed on the main boom.

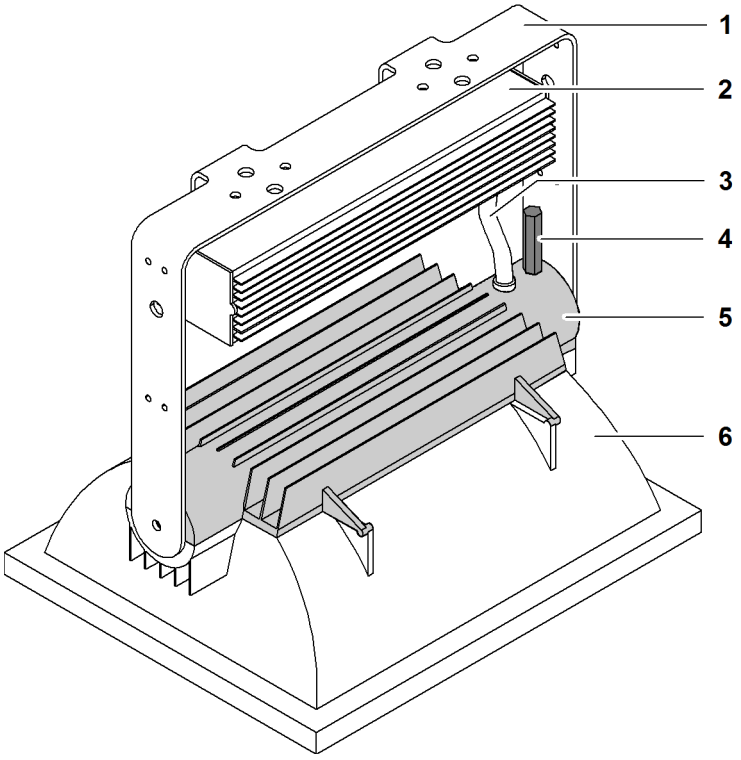

Fig. 575: High-pressure sodium vapor lamp on main boom

1	Bracket	**4**	Lever (2x)
2	Control gear	**5**	Cover
3	Electric cable	**6**	Main reflector

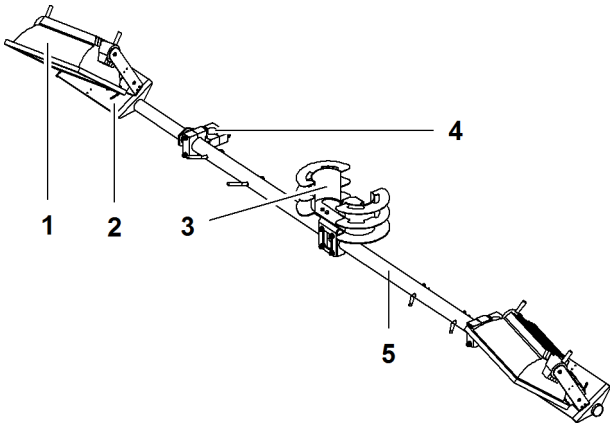

Fig. 576: Bracket high-pressure sodium vapor lamp on main boom

1	Floodlights (2x)	**4**	Mounts (2x) main boom
2	Fixing bases (2x)	**5**	Traverse
3	Cable bracket		

The fixing bases **2** can be inclined by 60° (60°).

The maximum cable length is 25 m (82‘ ft-in).

LWN/LR.x/V03.01//Auslieferung/2015-06-03/en

copyright by
LIEBHERR

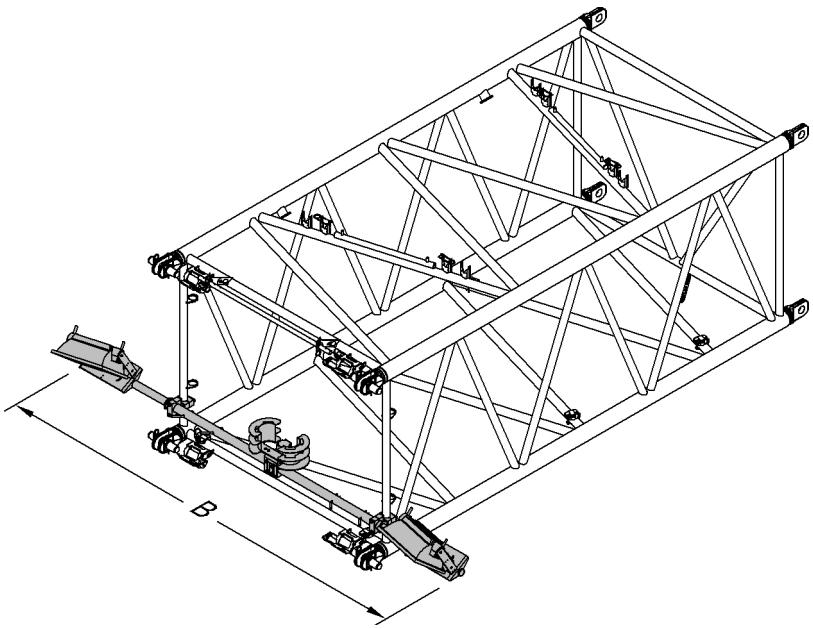

Fig. 577: High-pressure sodium vapor lamp installed on main boom

Name		Value
B	Width floodlights	5150 mm 16‘ 11“ ft-in
Weight		101 kg 223 lb
Illuminant		High-pressure sodium vapor lamp
Nominal voltage		230 V
Power consumption per floodlight		1000 W

Tab. 338: Technical data floodlights on main boom

LED floodlight

Only one pair of LED floodlights can be installed on the main boom.

LWN/LR.x/V03.01//Auslieferung/2015-06-03/en

copyright by
LIEBHERR

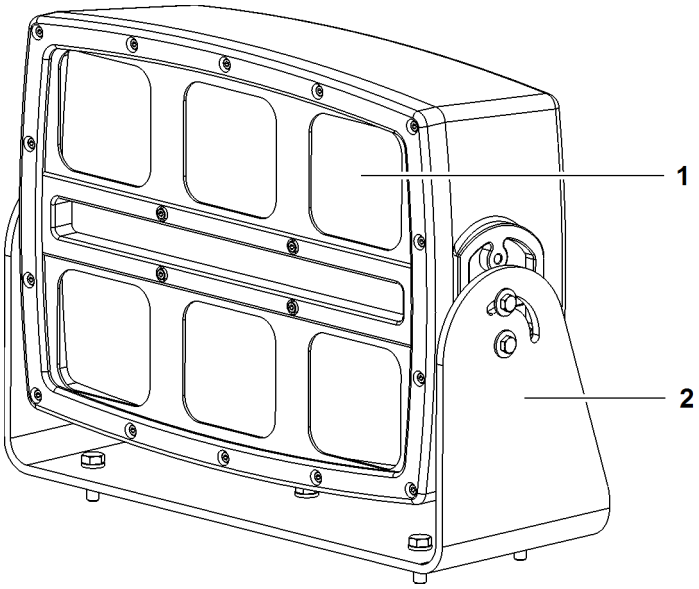

Fig. 578: LED floodlight on main boom

1	LED illumination unit (6x)	**1**	Bracket

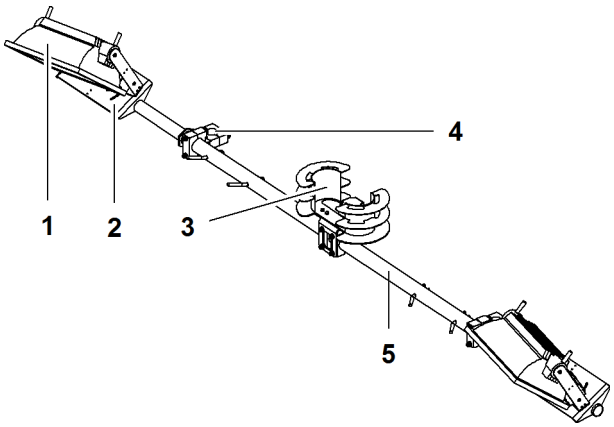

Fig. 579: LED floodlight on main boom

1	Floodlight (2x)	**4**	Mounts (2x) main boom
2	Fixing bases (2x)	**5**	Traverse
3	Cable bracket		

The fixing bases **2** can be inclined by 60° (60°).

The maximum cable length is 25 m (82‘ ft-in).

LWN/LR.x/V03.01//Auslieferung/2015-06-03/en

copyright by
LIEBHERR

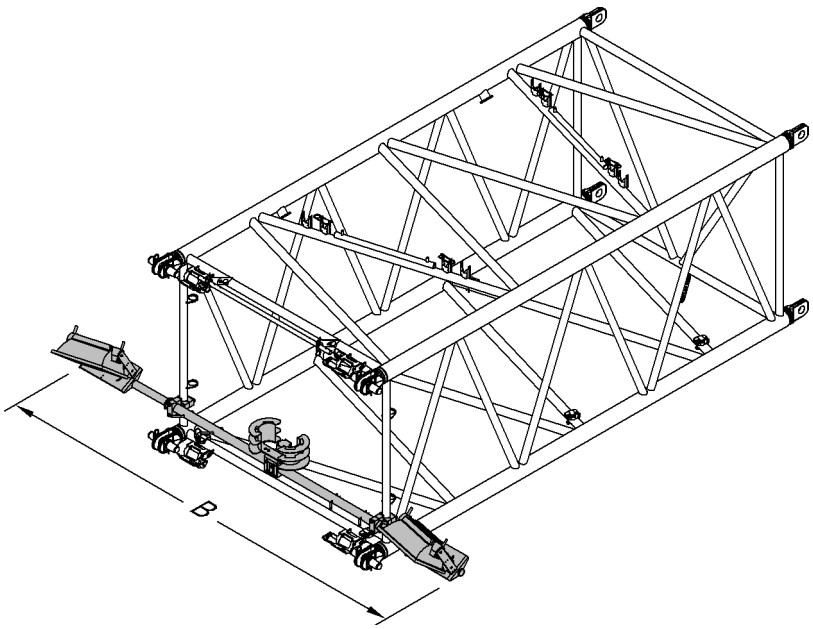

Fig. 580: LED floodlight installed on main boom

Name		Value
B	Width floodlights	5150 mm 16‘ 11“ ft-in
Weight		165 kg 364 lb
Illuminant		LED
Nominal voltage		24 V
Power consumption per floodlight		300 W

Tab. 339: Technical data LED floodlights on main boom

LWN/LR.x/V03.01//Auslieferung/2015-06-03/en

1.72.5 Floodlights on jib head

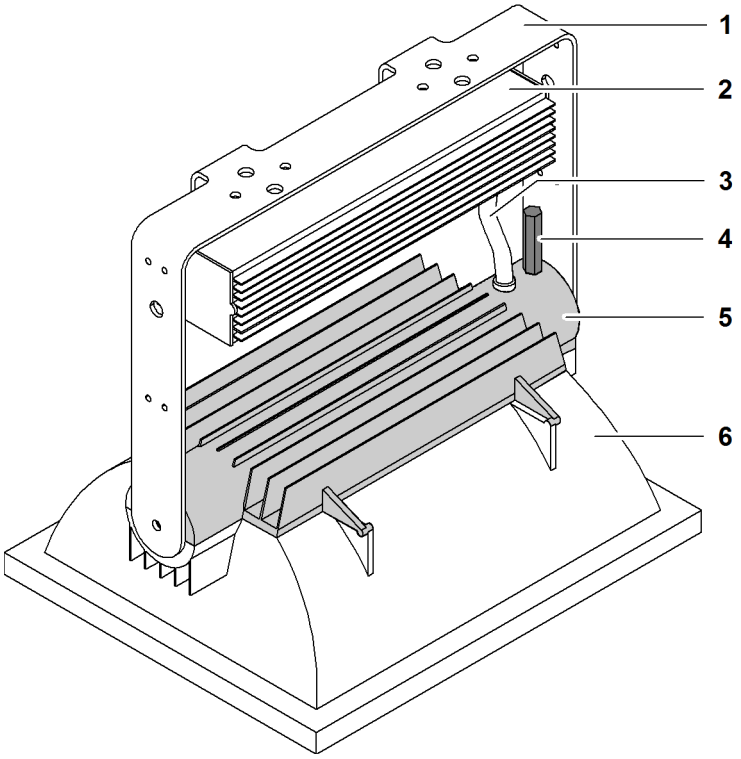

Fig. 581: Floodlights on jib head

1	Bracket	**4**	Lever (2x)
2	Control gear	**5**	Cover
3	Electric cable	**6**	Main reflector

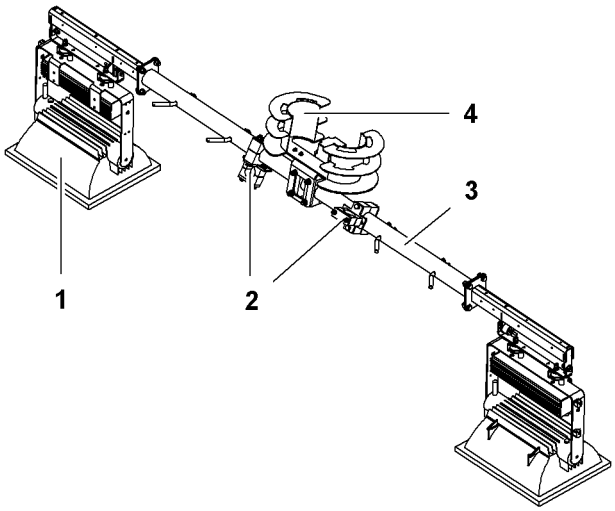

Fig. 582: Floodlights on jib head

1	Floodlight (2x)	**3**	Traverse
2	Bracket (2x)	**4**	Cable bracket

The cable length is 25 m (82‘ ft-in).

LWN/LR.x/V03.01//Auslieferung/2015-06-03/en

copyright by
LIEBHERR

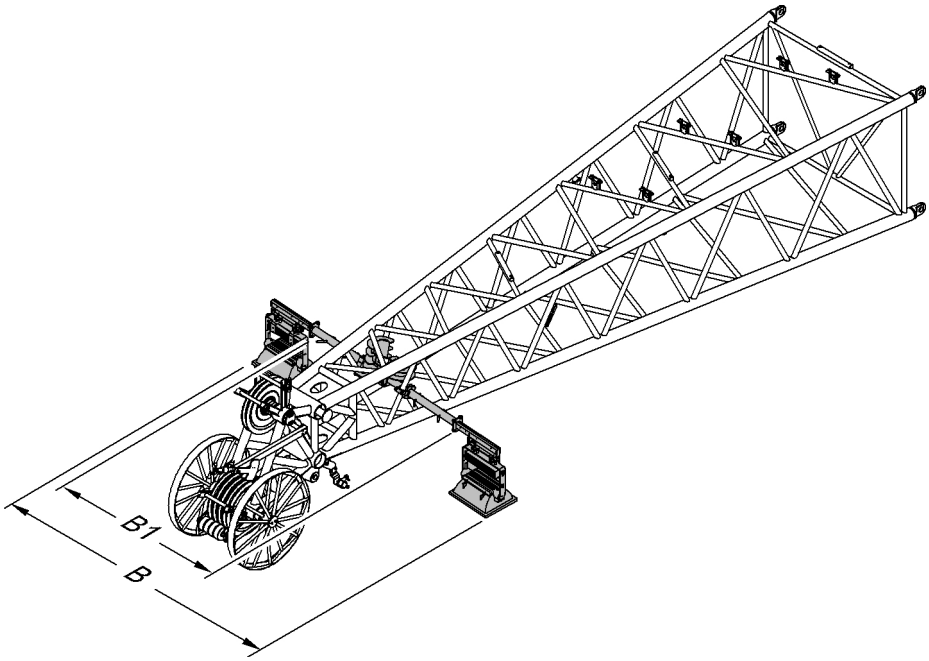

Fig. 583: Floodlights on jib head

Name		Value
Illuminant		High-pressure sodium vapor lamp
B	Width	4028 mm 13‘ 3“ ft-in
B1	Width	2409 mm 7‘ 11“ ft-in
Weight		233 kg 514 lb
Nominal voltage		230 V
Power consumption per floodlight		1000 W

Tab. 340: Technical data floodlight on jib head

LWN/LR.x/V03.01//Auslieferung/2015-06-03/en

copyright by
LIEBHERR

Safety instructions 2

2 Safety instructions

2 Safety instructions

The chapter **Safety instructions** deals with the following issues:
– Areas of responsibility and required personnel
– Dangers and remaining risks despite proper use
– Measures to prevent danger

2.1 Technical condition of the machine

For the machine to be operated safely, the following requirements in terms of its technical condition must be met:
– The machine must be in perfect condition
– Unauthorised conversion or modification is not permitted
– Maintenance must be performed regularly
– Safety devices must be in good working order

2.2 Areas of responsibility

2.2.1 Manufacturer

The manufacturer:
– is responsible for the impeccable safety state of the machine with accessories and documentation when surrendering to the operator.
– is aware of its duty to monitor product performance and document all maintenance and repair work carried out by authorized service personnel.
– ensures that the machine is kept in an operational state by a worldwide maintenance and repair service.
– runs a training center and provides training for the owner's operating and maintenance personnel as a service.

2.2.2 Owner

The owner:
– ensures that the machine is operated and maintained by qualified personnel only.
– checks that all individuals who come into contact with the machine are fully qualified, and authorises them to work.
– specifies the skills and responsibilities of all those working with or near the machine.
– provides all necessary protective equipment to individuals working with or near the machine.

LWN/LR.x/V03.01//Auslieferung/2015-06-03/en

copyright by LIEBHERR

- regularly checks that personnel carry out their work in a safety-conscious manner.
- is responsible for the impeccable safety state of the machine with accessories and documentation as of surrender from the manufacturer.
- completely removes the machine from use upon the discovery of any faults that may affect safety.
- performs inspections on the machine based on national regulations in addition to the inspections stipulated by Liebherr.
- informs the manufacturer of any accident involving the machine leading to serious injury or major damage to property.
- allows authorized service personnel unlimited access to the machine in order that they may fulfill their duty to monitor the product.
- carefully and conscientiously carries out work planning for the machine.
- will not carry out any alterations on the machine without first consulting the manufacturer.
- must only use original Liebherr spare parts.

2.2.3 Machine operator

The machine operator:
- have read and understood the operation manual.
- operates the machine for the purposes intended, within the limit values specified in the load chart and in accordance with the setup and the operation manual.
- wear personal protective equipment.
- reports to the owner any alteration to the machine that affects safety.
- halts operation immediately if safe operation is no longer possible.
- will not carry out any alterations on the machine without first consulting the manufacturer.
- must only use original Liebherr spare parts.
- must ensure that a co-driver rides in the intended seat and wears a safety belt (if a co-driver is intended and permitted by the manufacturer).

2.2.4 Rigger

The rigger:
- is responsible for the correct selection and fitting/removal of the lifting device on the load or rigging material.
- gives the machine operator signals relating to the movement of the machine and loads.
- is responsible for ensuring that only one person gives signals to the machine operator and that the machine operator knows who this person is.
- wear personal protective equipment.

2.2.5 Banksman

The banksman:
- forwards signals from the rigger to the machine operator if the rigger has no visual contact with the machine operator.
- wear personal protective equipment.

2.2.6 Maintenance and service personnel

The maintenance and service personnel:
- maintain the machine to ensure that it remains in a safe and reliable condition.

LWN/LR.x/V03.01//Auslieferung/2015-06-03/en

copyright by
LIEBHERR

- have read and understood the operation manual.
- wear personal protective equipment.
- perform all specified maintenance work.
- will not carry out any alterations on the machine without first consulting the manufacturer.
- must only use original Liebherr spare parts.

2.3 Requirements to personnel

2.3.1 Machine operator

The machine operator:
- are of the statutory minimum age.
- must be physically capable (adequate eyesight and hearing, quick reactions) of safely operating the machine.
- is authorised to operate the machine.
- is capable of accurately estimating distances, heights and clearances.
- is trained:
  - to operate this type of machine
  - in attaching and signalling
  - to operate fire extinguishing equipment
- is aware of the escape routes in the event of an emergency.
- do not suffer from any physical or psychological ailments that lower any of the specified requirements.
- are not under the influence of alcohol or drugs.

2.3.2 Rigger

The rigger:
- are of the statutory minimum age.
- is physically capable (adequate eyesight and hearing, quick reactions) of safely using/moving lifting devices.
- is authorised to rig loads.
- is capable:
  - of accurately estimating distances, heights and clearances
  - of accurately estimating mass and load distribution
  - of operating walkie-talkies and using them to give clear instructions
  - of guiding the load and ensuring the safe movement of the load and the machine
- is trained:
  - in attaching lifting devices
  - in signalling and knows the signal signs
  - in selecting the correct lifting device
  - in securing against unexpected detachment
  - in preventing damage to lifting devices
- do not suffer from any physical or psychological ailments that lower any of the specified requirements.
- are not under the influence of alcohol or drugs.

LWN/LR.x/V03.01//Auslieferung/2015-06-03/en

copyright by
LIEBHERR

2.3.3 Banksman

The banksman:
- are of the statutory minimum age.
- are physically capable (adequate eyesight and hearing, quick reactions).
- is authorised to give signal signs.
- is capable:
  - of accurately estimating distances, heights and clearances
  - of operating walkie-talkies and using them to give clear instructions
  - of guiding the load and ensuring the safe movement of the load and the machine
- is trained in signalling and knows the signal signs.
- do not suffer from any physical or psychological ailments that lower any of the specified requirements.
- are not under the influence of alcohol or drugs.

2.3.4 Maintenance personnel

Maintenance personnel:
- are of the statutory minimum age.
- are physically capable (adequate eyesight and hearing, quick reactions).
- are familiar with the machine and the hazards.
- are familiar with all maintenance procedures and measures.
- are trained to perform maintenance duties, including on specialist equipment.
- do not suffer from any physical or psychological ailments that lower any of the specified requirements.
- are not under the influence of alcohol or drugs.

2.4 Personal protective equipment

The machine operator, slinger, signalman and maintenance personnel must take personal responsibility for:
- Wearing the required personal protective gear.
- Regular cleaning and care of the protective gear.
- Replacing any defective items of protective gear promptly.

The personal protective gear comprises:
- **Safety helmet**, if head injuries are possible due to:
  - collision,
  - swinging, falling, toppling or flying objects
- **Safety goggles**, if eye injuries are possible due to:
  - corrosive or pressurised liquids
  - loose flying parts
- **Ear protection**, if the sound level is likely to be excessive
- **Breathing mask**, where there is danger from health-threatening gases, vapour, smoke or dust in the working environment
- **Protective gloves**, if hand injuries are possible due to:
  - Burns
  - pointed or sharp objects
- **Reflective, boldly-coloured clothing** if prompt recognition by other personnel is necessary.
- **Safety shoes**, if foot injuries are possible due to:
  - collision or trapping
  - pointed or sharp objects

LWN/LR.x/V03.01//Auslieferung/2015-06-03/en

copyright by
LIEBHERR

- swaying or falling objects
– **Special protective clothing**, where there is a risk of burns, hypothermia, chemical burns, stabbing or cutting injuries to the body

2.5 Work area

Operation of the machine is defined for one operator.

The workplace is the cab on the uppercarriage.

Ensure that the following conditions are satisfied:
– No one other than the machine operator is on the machine or within the danger zone around the machine.
– The machine operator must remain in the cab all the time.

Use operating elements exclusively from the operator's seat.

Requirements for a safe working environment:
– Keep cab clean.
– Do not place any articles on the control panels.
– Do not keep tools in the cab.
– Hang any clothing on the hook provided for this purpose.
– Keep the entrance to the cabin clean and free of snow and ice; do not obstruct the entrance with objects or block the escape routes.
– Keep the screens and mirrors (internal and external) clean and free of condensation and ice.

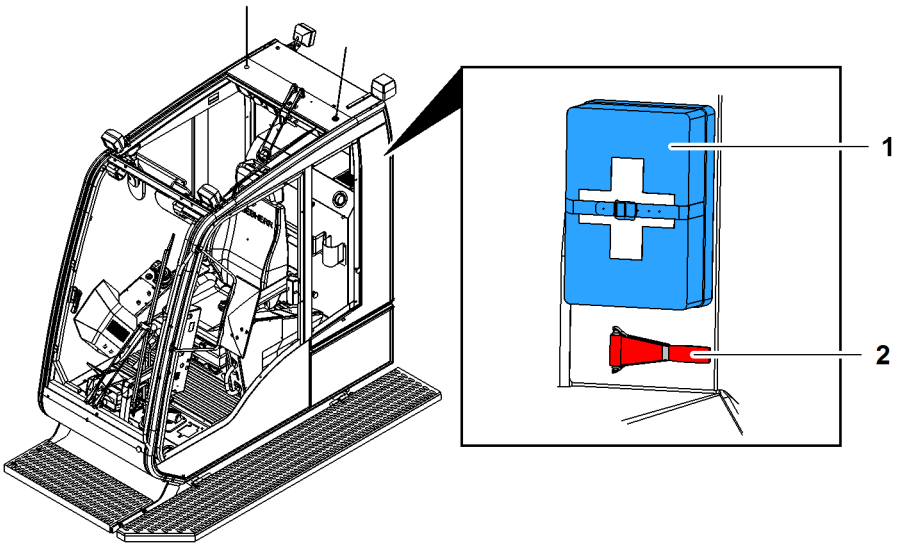

Fig. 584: Emergency devices

1 First-aid box **2** Emergency hammer

The first-aid box **1** supplied with the machine is equipped in accordance with ÖNORM V 5101.

Note

▶ All sterile items and plasters are to be replaced after use or as required.

▶ All “First Aid” measures and national regulations are to be followed.

LWN/LR.x/V03.01//Auslieferung/2015-06-03/en

copyright by LIEBHERR

If the cabin door will not open, use the emergency hammer **2** to break the side windows to create an emergency exit.

2.6 Danger zone

WARNING
Machine in use!
Death, grave injury.

- ▶ Make sure that no-one is standing in the danger area.
- ▶ Leave the danger area.

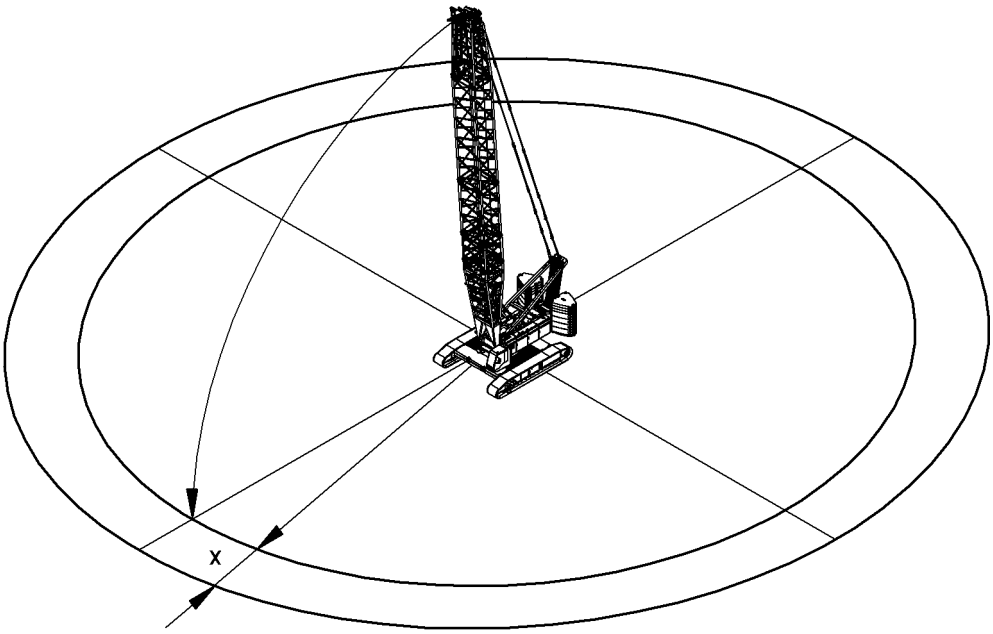

Fig. 585: Danger zone of machine

x Travel of swinging load

Danger area = length of equipment + x

LWN/LR.x/V03.01//Auslieferung/2015-06-03/en

copyright by
LIEBHERR

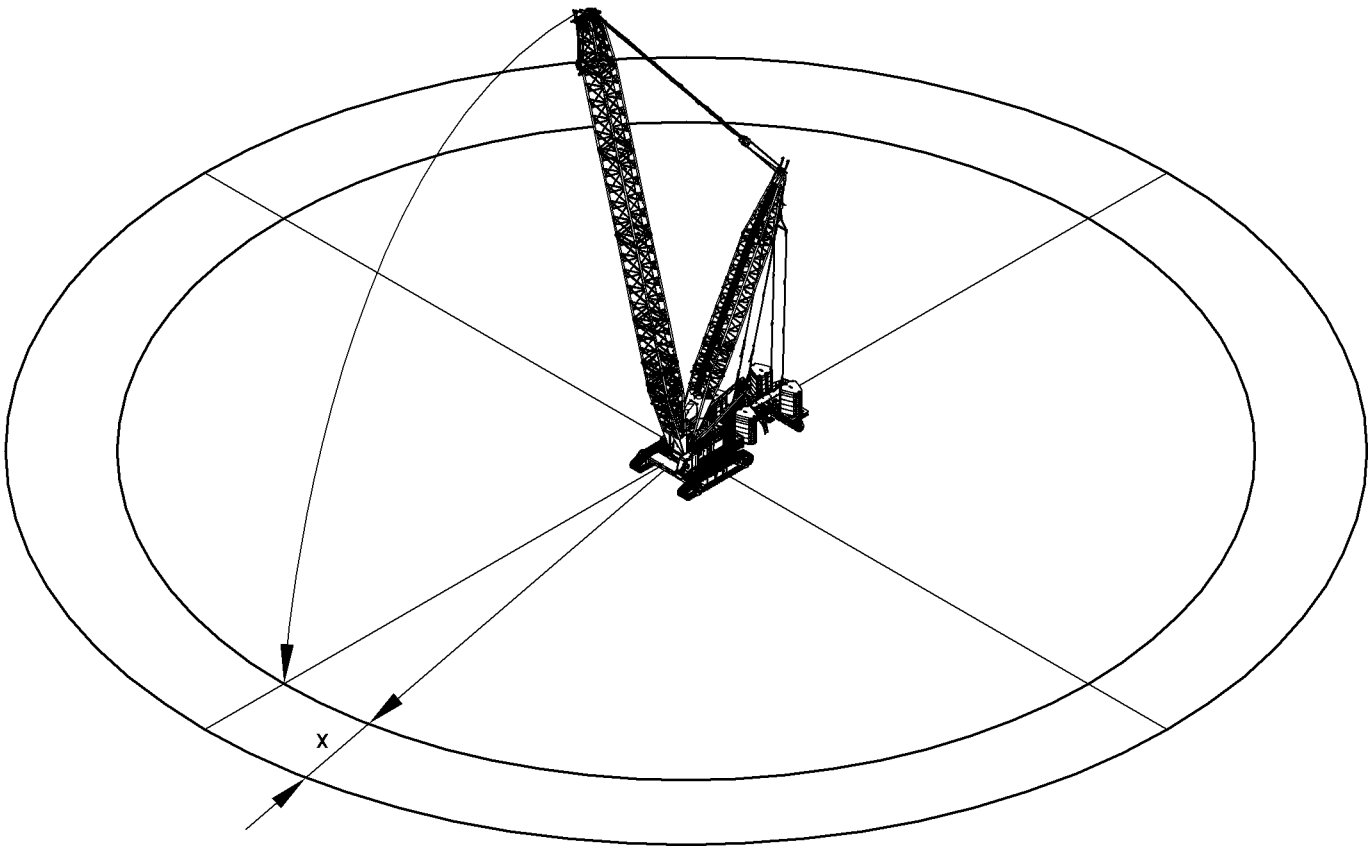

Fig. 586: Danger zone of machine with derrick equipment

x Travel of swinging load

Danger zone = length of equipment + x

2.7 Safety signs on the machine

WARNING
Missing, damaged or illegible safety signs!

- ▶ Check safety signs to ensure they are complete and legible.
- ▶ Replace missing or illegible safety signs with new, original ones.

LWN/LR.x/V03.01//Auslieferung/2015-06-03/en

copyright by
LIEBHERR

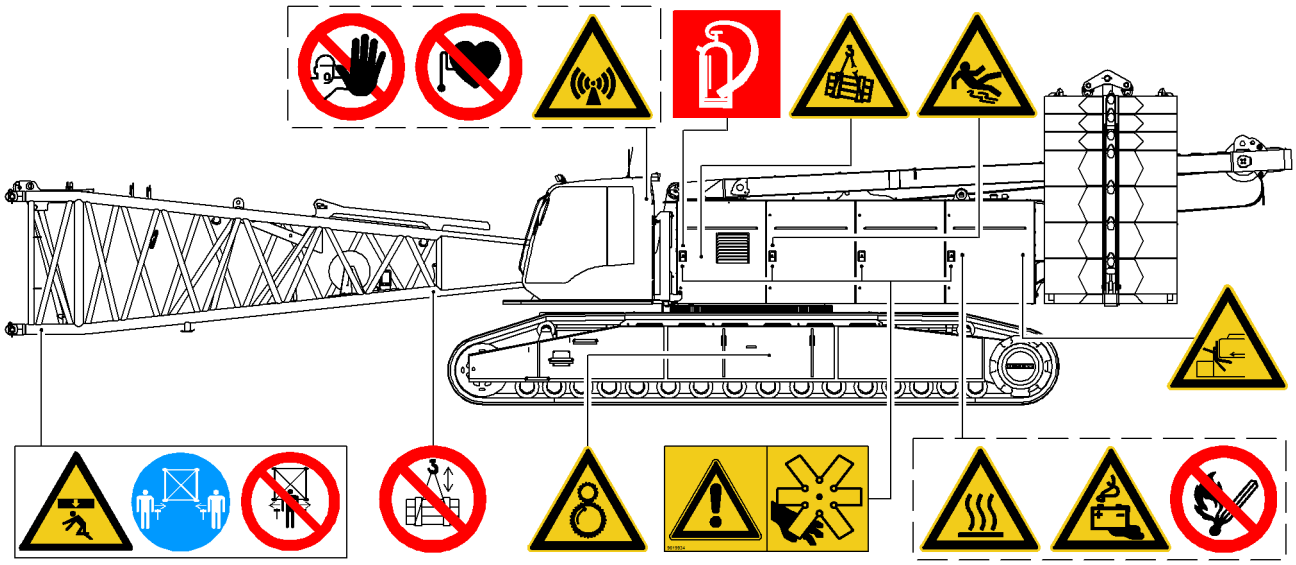

Fig. 587: Safety signs on the left-hand side of the machine

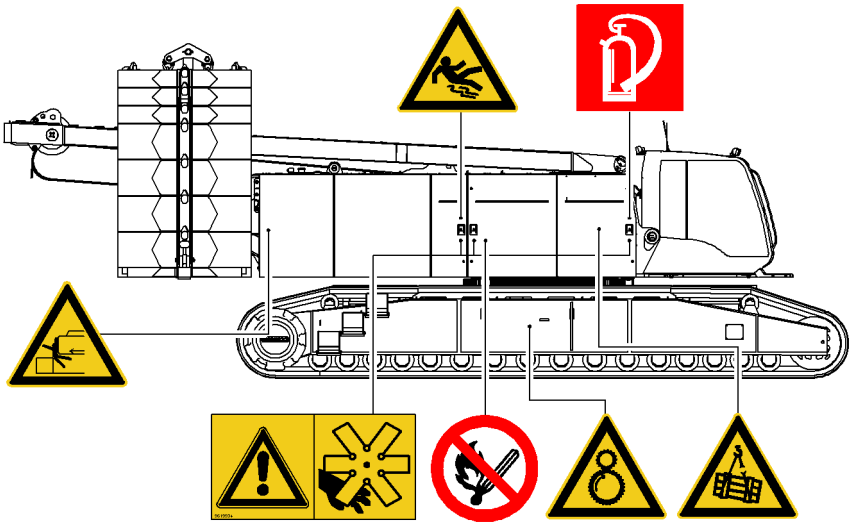

Fig. 588: Safety signs on the right-hand side of the machine

LWN/LR.x/V03.01//Auslieferung/2015-06-03/en

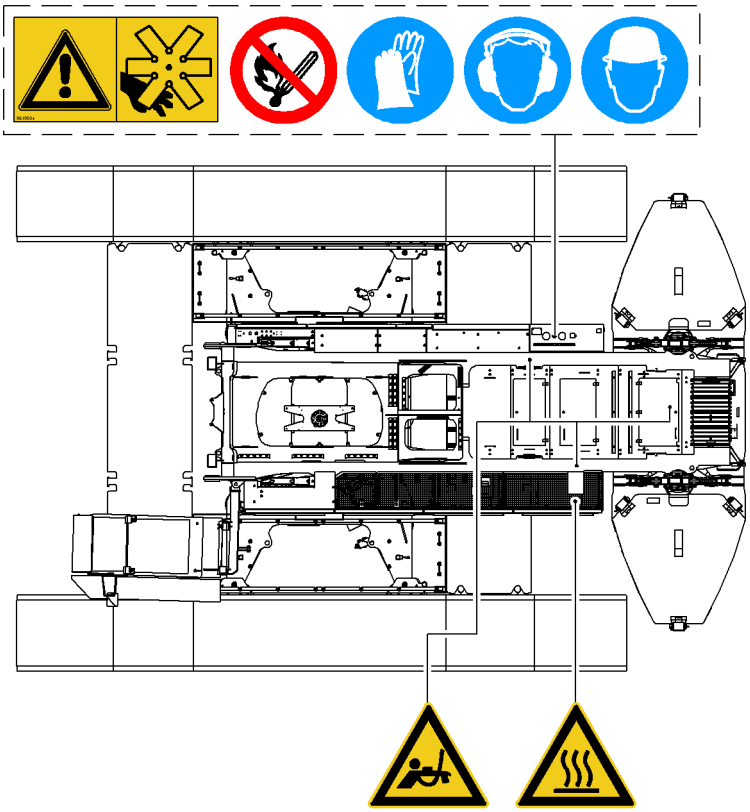

Fig. 589: Safety signs on the top of the machine

LWN/LR.x/V03.01//Auslieferung/2015-06-03/en

copyright by
LIEBHERR

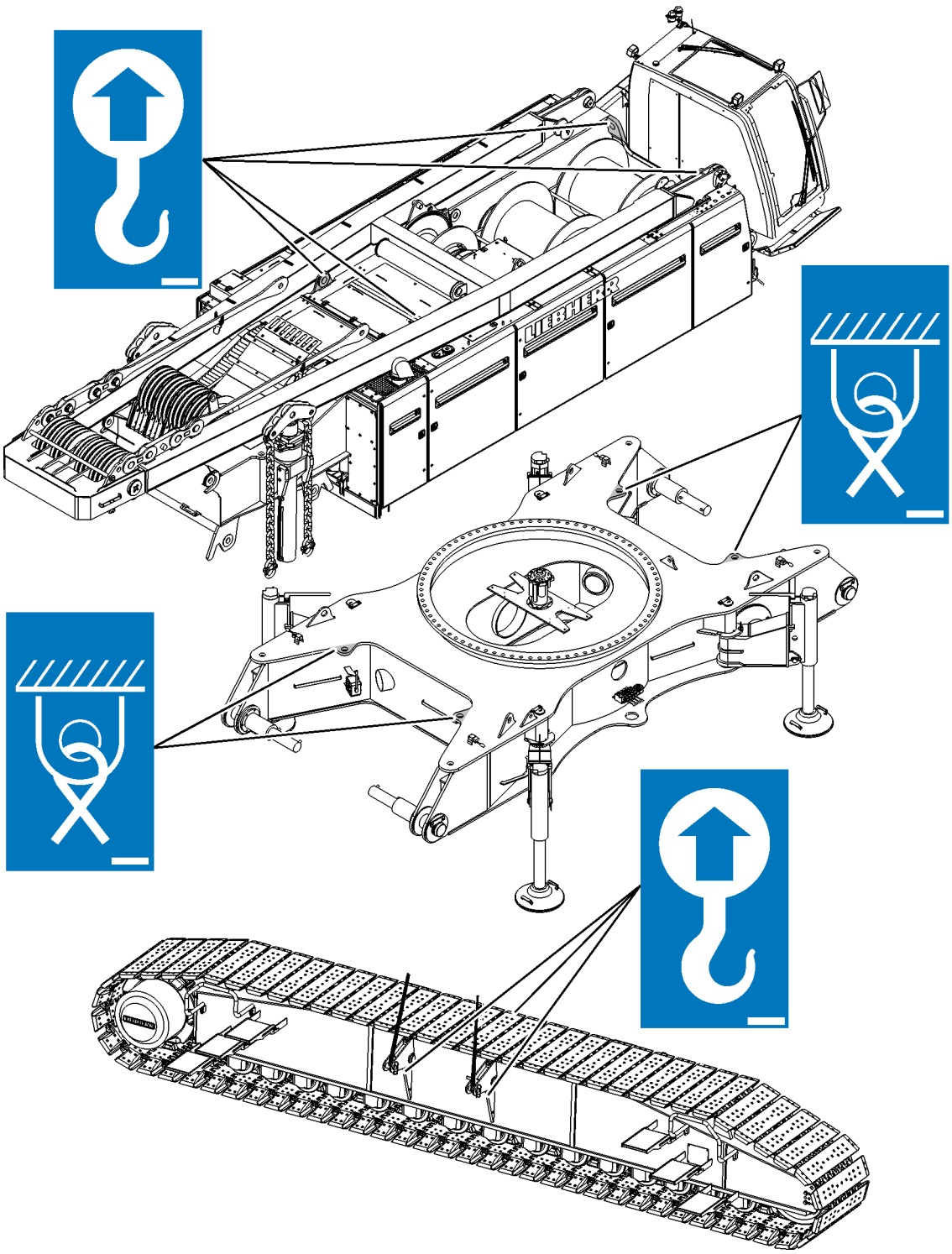

Fig. 590: Labelling of lashing points and rigging points for undercarriage with fixed track width

LWN/LR.x/V03.01//Auslieferung/2015-06-03/en

copyright by
LIEBHERR

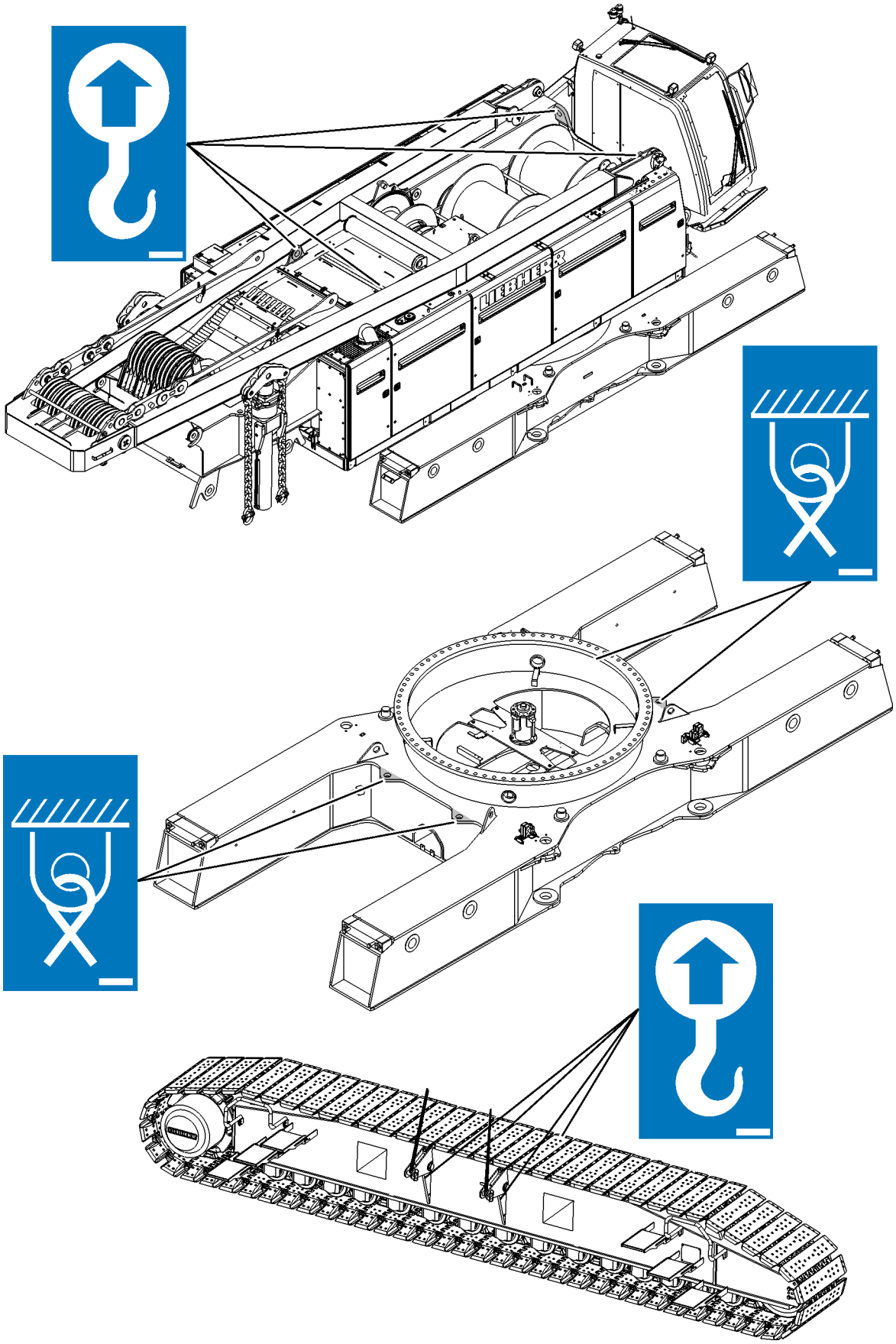

LWN/LR.x/V03.01//Auslieferung/2015-06-03/en

Fig. 591: Labelling of lashing points and rigging points for undercarriage with adjustable track width*

copyright by
LIEBHERR

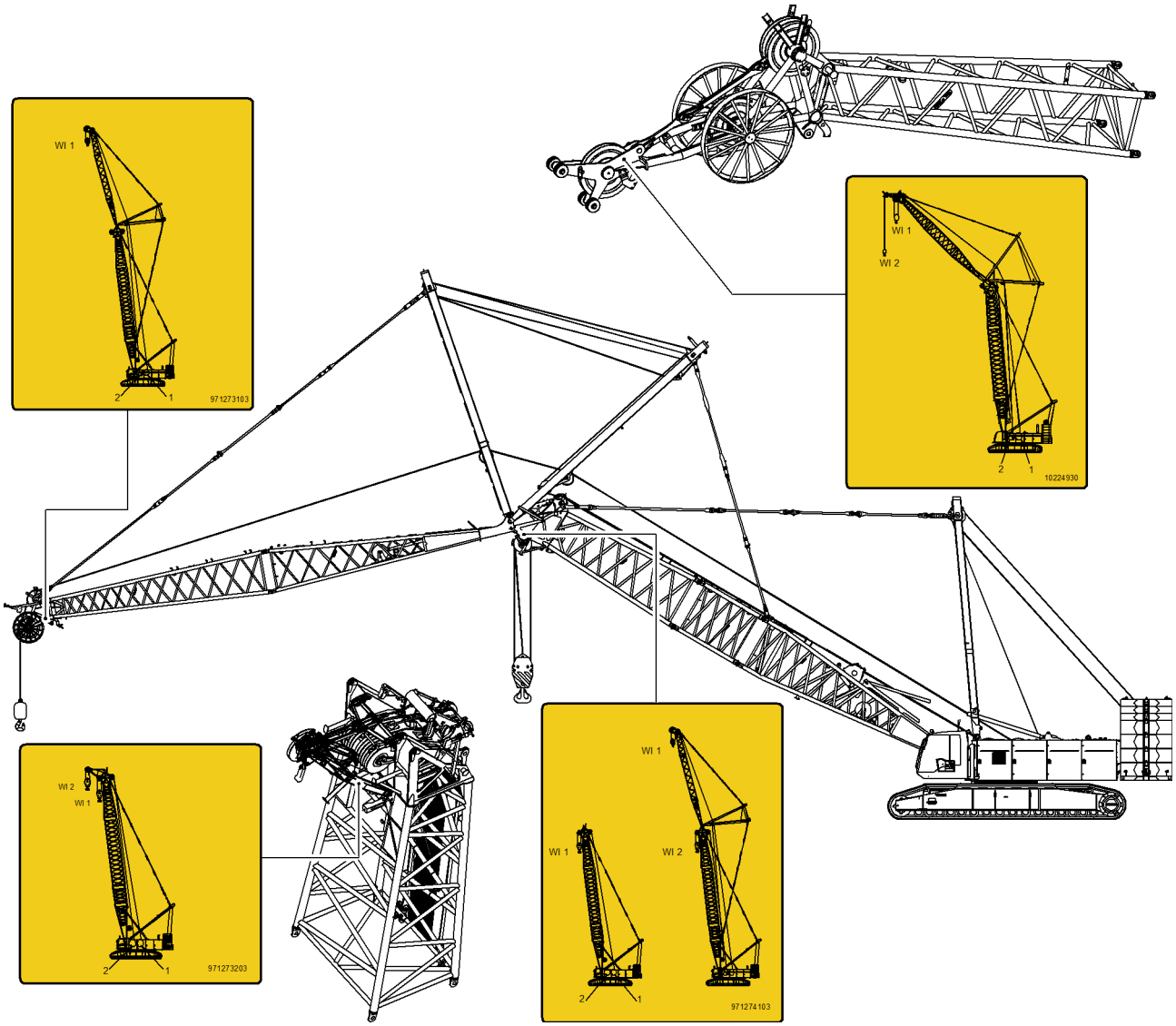

Fig. 592: Safety signs on boom

LWN/LR.x/V03.01//Auslieferung/2015-06-03/en

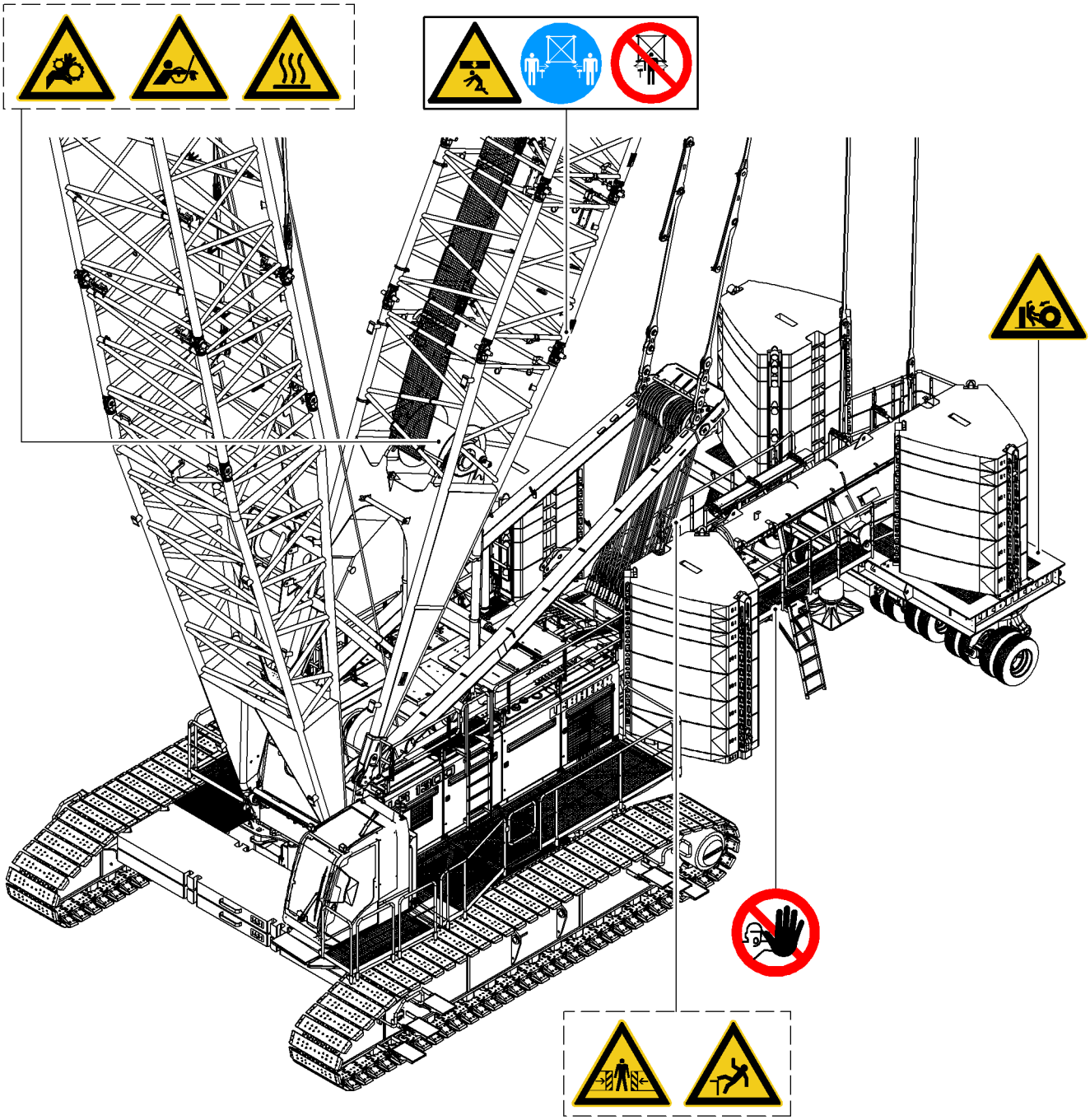

*Fig. 593: Safety signs on machine with derrick equipment**

LWN/LR.x/V03.01//Auslieferung/2015-06-03/en

copyright by
LIEBHERR

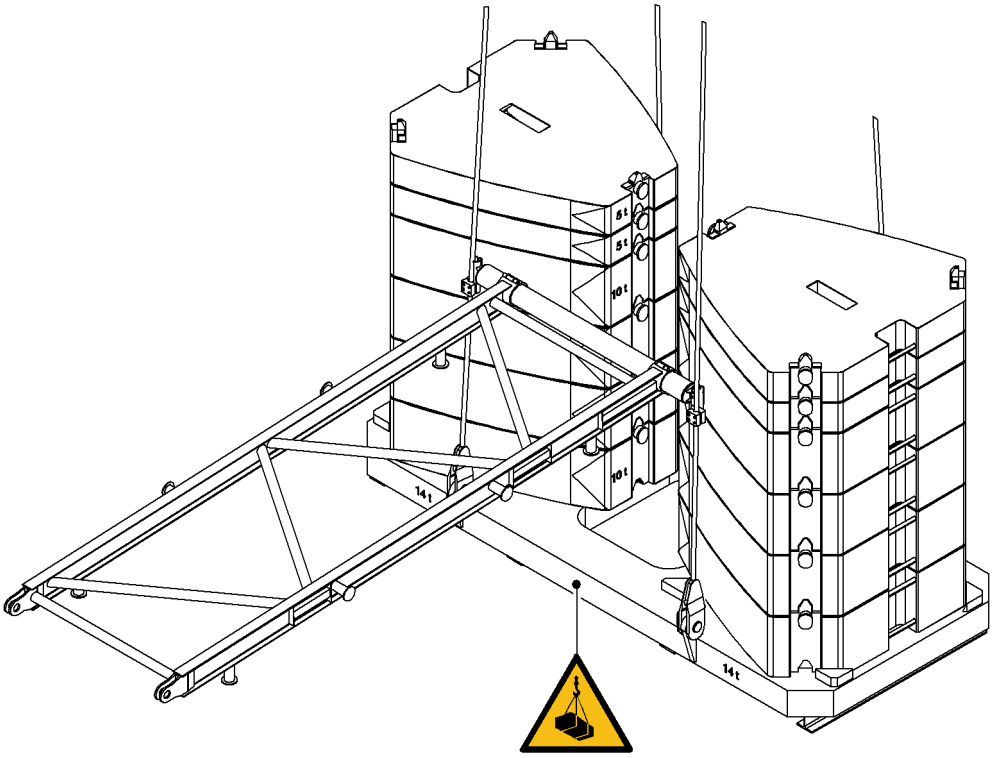

*Fig. 594: Safety signs on suspended counterweight of derrick equipment**

The warning sign on the suspended counterweight is attached on all sides of the counterweight frame.

2.8 Safety signs on the machine (US market)

WARNING
Missing, damaged or illegible safety signs!

- ▶ Check safety signs to ensure they are complete and legible.
- ▶ Replace missing or illegible safety signs with new, original ones.

LWN/LR.x/V03.01//Auslieferung/2015-06-03/en

copyright by
LIEBHERR

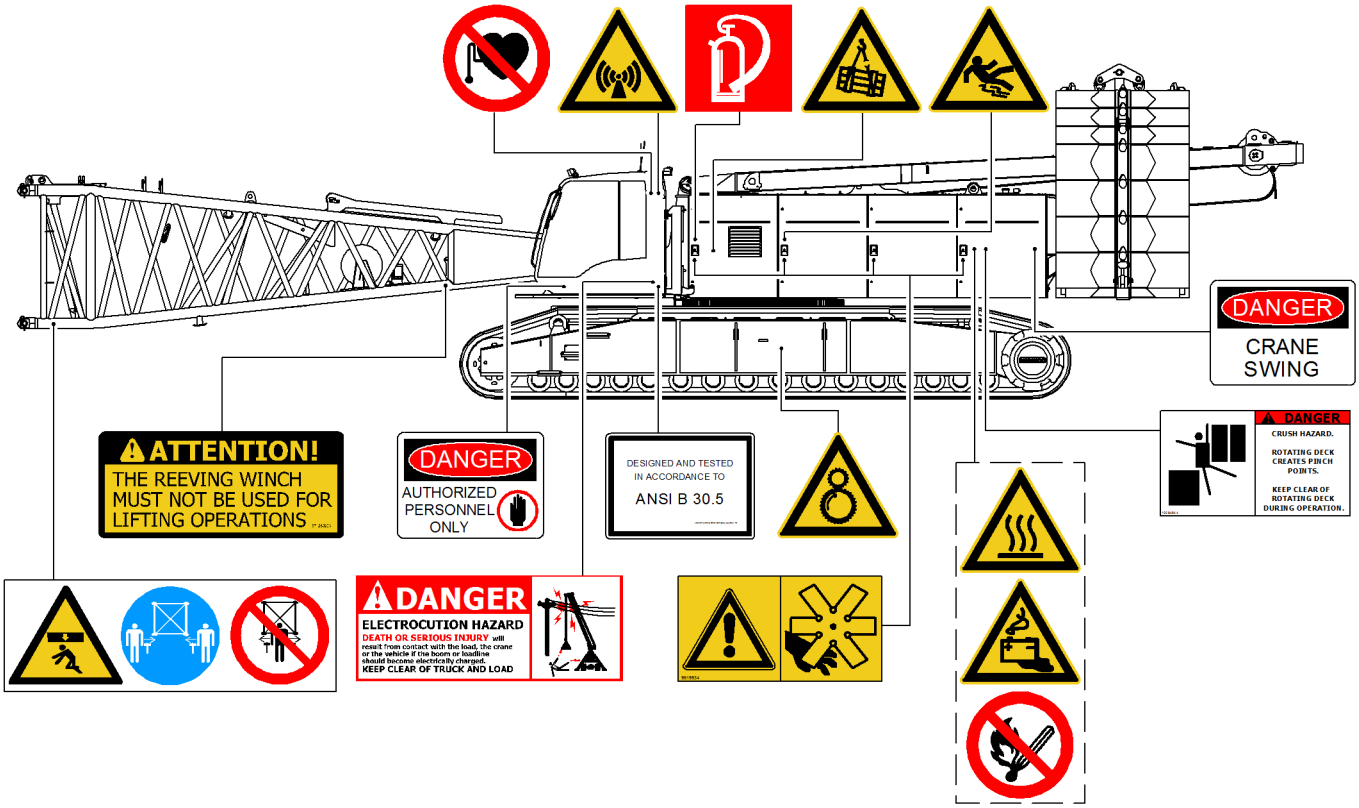

Fig. 595: Safety signs on the left-hand side of the machine

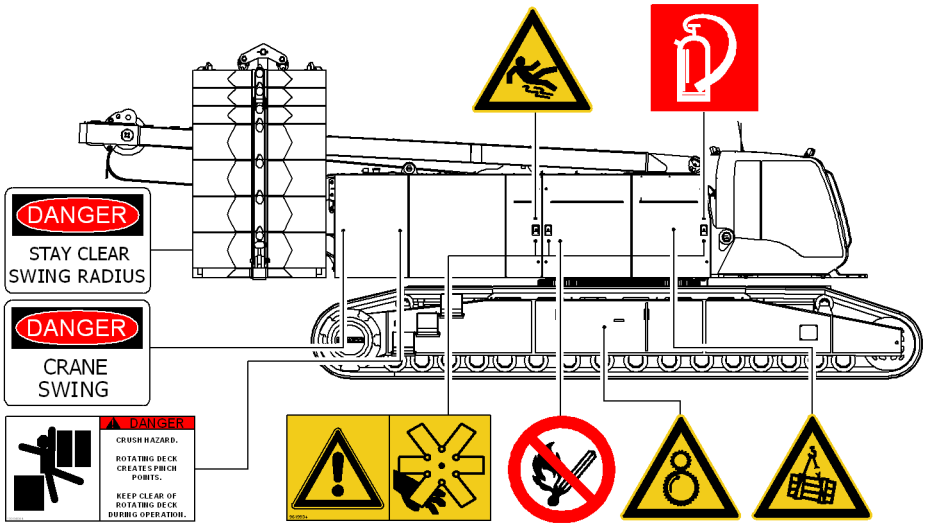

Fig. 596: Safety signs on the right-hand side of the machine

copyright by
LIEBHERR

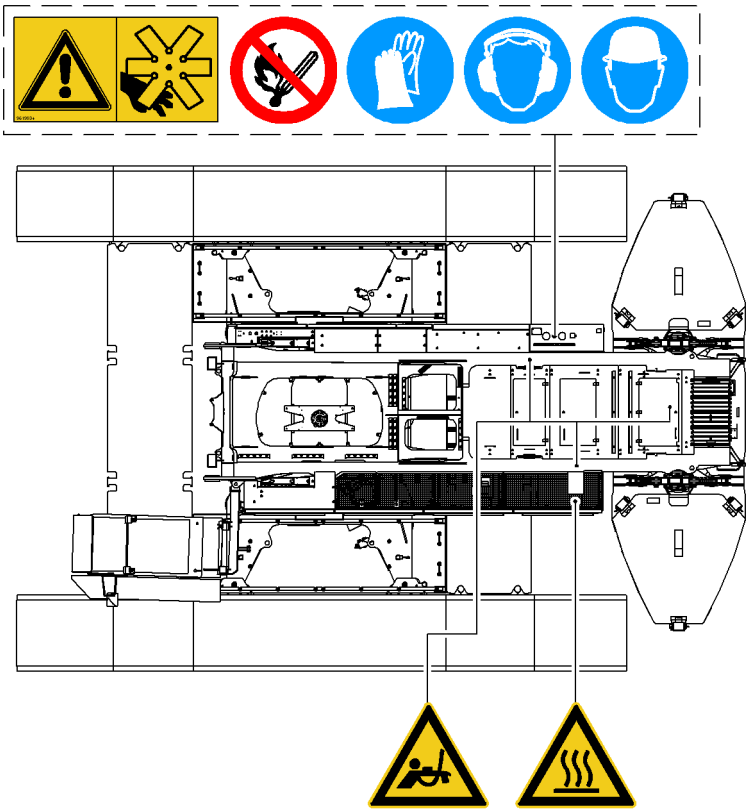

Fig. 597: Safety signs on the top of the machine

LWN/LR.x/V03.01//Auslieferung/2015-06-03/en

copyright by
LIEBHERR

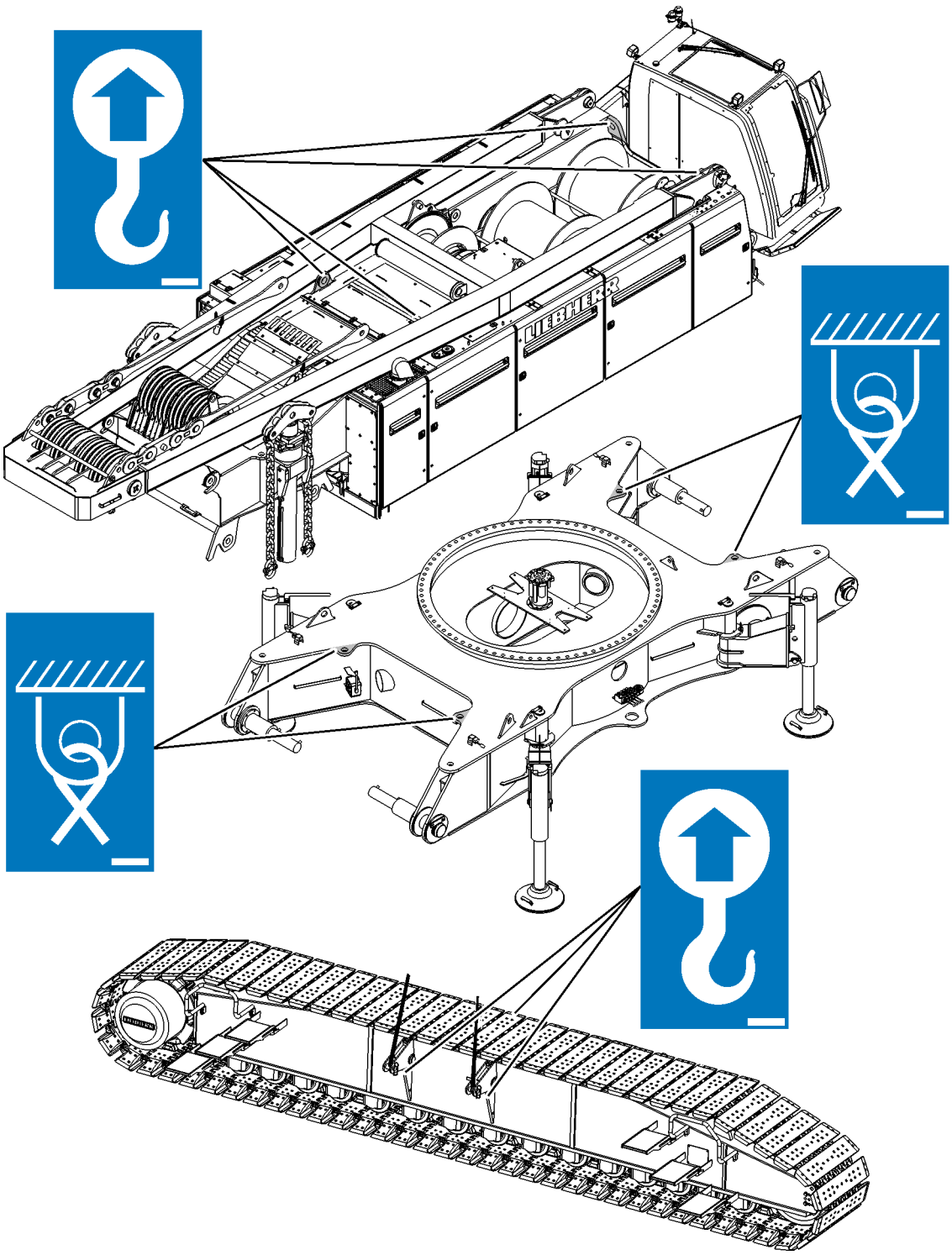

Fig. 598: Labelling of lashing points and rigging points for undercarriage with fixed track width

LWN/LR.x/V03.01//Auslieferung/2015-06-03/en

copyright by
LIEBHERR

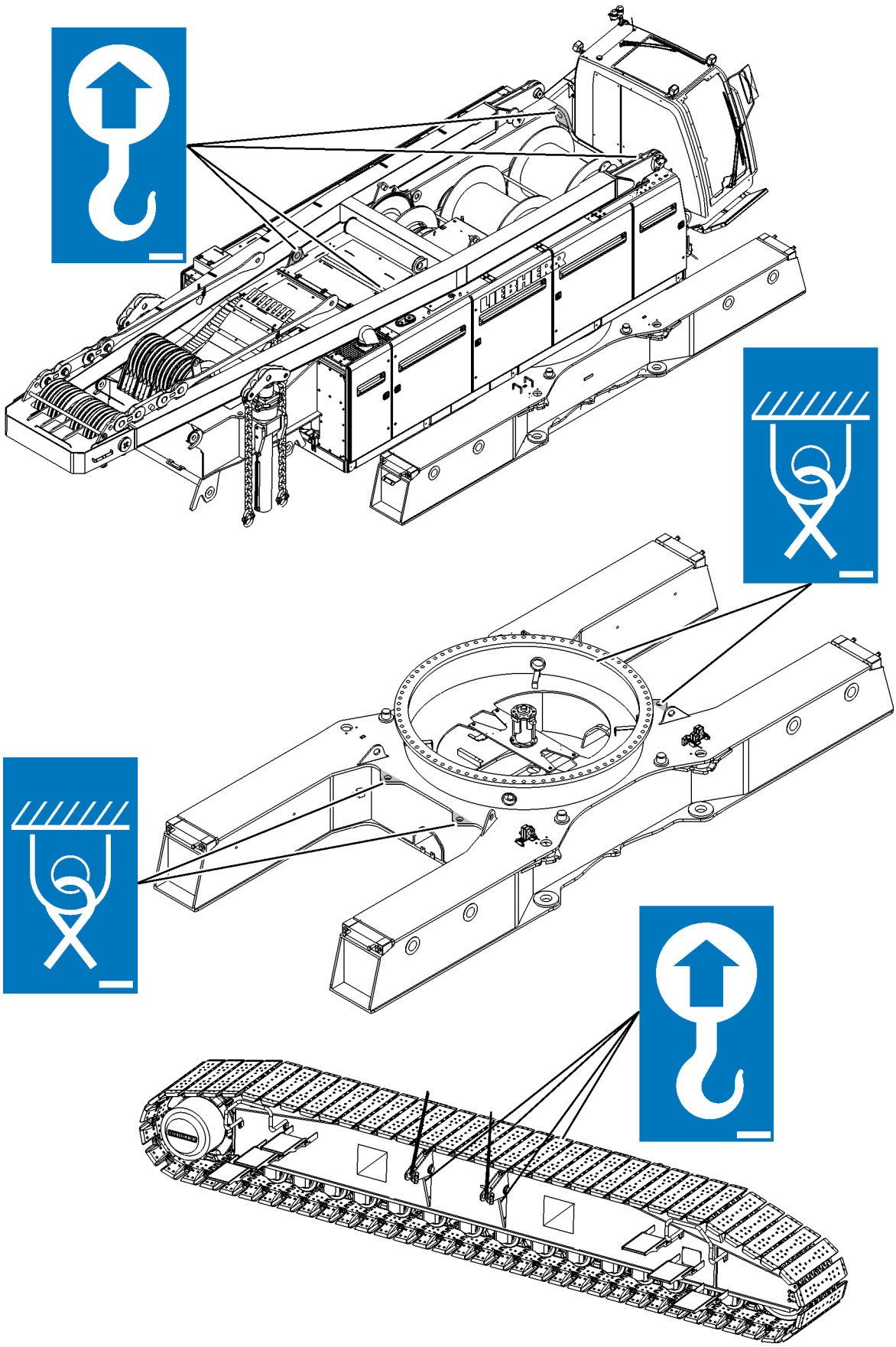

LWN/LR.x/V03.01//Auslieferung/2015-06-03/en

Fig. 599: Labelling of lashing points and rigging points for undercarriage with adjustable track width*

copyright by
LIEBHERR

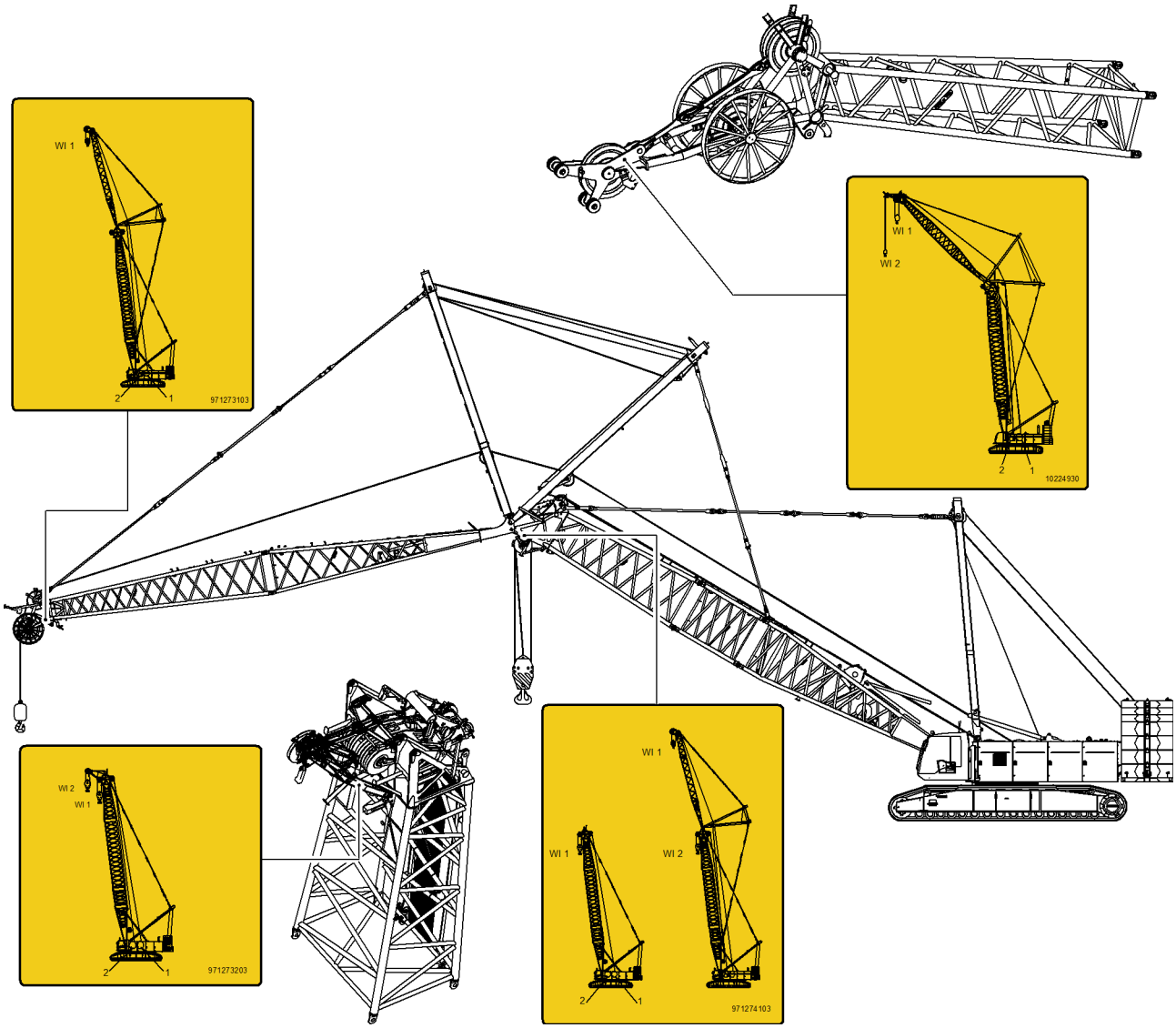

Fig. 600: Safety signs on boom

LWN/LR.x/V03.01//Auslieferung/2015-06-03/en

copyright by
LIEBHERR

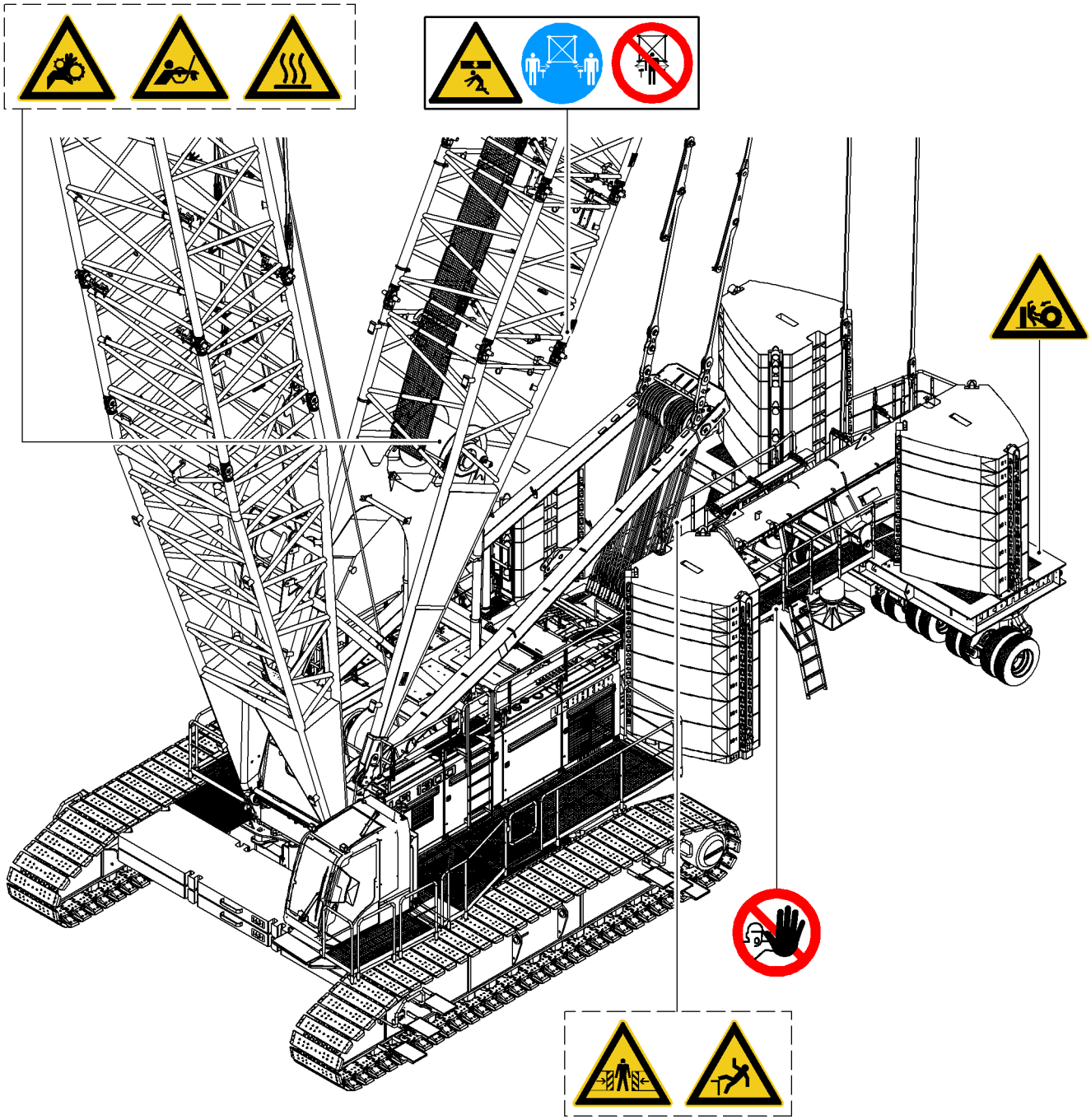

*Fig. 601: Safety signs on machine with derrick equipment**

LWN/LR.x/V03.01//Auslieferung/2015-06-03/en

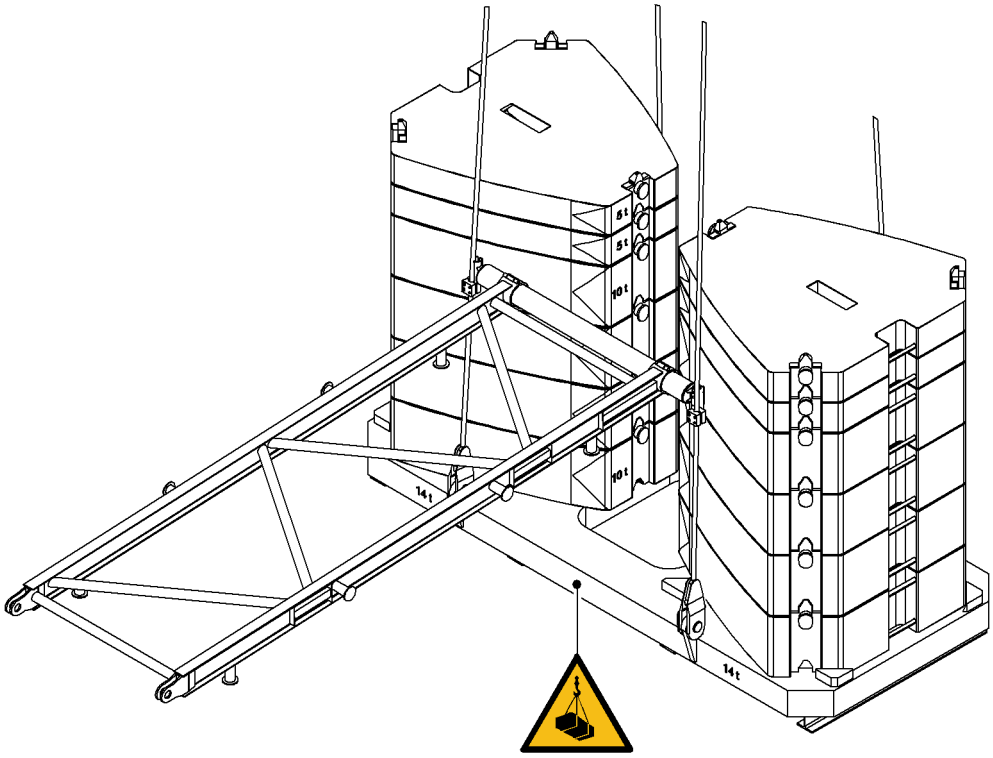

*Fig. 602: Safety signs on suspended counterweight of derrick equipment**

The warning sign on the suspended counterweight is attached on all sides of the counterweight frame.

2.9 Meaning of the safety signs

Safety signs are divided into different groups that differ with respect to shape and colour.

2.9.1 Mandatory signs

Characteristics of instruction signs:
- Round
- No rim
- Blue background
- White pictogram

Instruction signs indicate safety-relevant behavior.

General mandatory signs

Observe operation manual

LWN/LR.x/V03.01//Auslieferung/2015-06-03/en

copyright by
LIEBHERR

Use hearing protection

Use eye protection

Use foot protection

Use hand protection

Use protective clothing

Use face protection

Use head protection

Use safety harness

Use restraint system

2.9.2 Prohibition signs

Characteristics of prohibition signs:
- Round
- Red rim
- Red diagonal bar
- White background
- Black pictogram

Prohibition signs prohibit behavior that causes danger.

General prohibition signs

LWN/LR.x/V03.01//Auslieferung/2015-06-03/en

copyright by
LIEBHERR

Smoking prohibited

Fire, open ignition sources and smoking prohibited

Pedestrians forbidden

Prohibited for ground conveyors

Access for persons with pacemakers or implanted defibrillators prohibited

No access for unauthorised personnel

Entering the area prohibited

Switching prohibited

Do not lift load

No climbing for unauthorised personnel

High-pressure cleaning prohibited

2.9.3 Warning signs

Characteristics of warning signs:
- Triangular
- Black rim
- Yellow background
- Black pictogram

Warning signs indicate risks or hazards.

LWN/LR.x/V03.01//Auslieferung/2015-06-03/en

copyright by
LIEBHERR

General warning signs

Observe operation manual

Warning of non-ionizing radiation

Warning of obstacles on the ground

Warning of fall hazard

Warning of slipping hazard

Warning of electric voltage

Warning of suspended loads

Warning of hot surfaces

Warning of crushing hazard

Warning of crushing hazard when falling

Warning of hand injuries

Warning of counter-rotating rollers

Warning against staying the swing range

LWN/LR.x/V03.01//Auslieferung/2015-06-03/en

copyright by
LIEBHERR

Warning of crushing hazard from above

Warning of crushing hazard from above

Warning of getting rolled over

Warning of getting rolled over

Warning of getting drawn into winches

Warning of dangers through pressure container

Warning of hazards through battery charging

Warning of dangers through hydraulic oil

2.9.4 Rescue signs

Features of rescue signs:
- Square
- No frame
- Green background
- White pictogram

Rescue signs mark the locations of first aid equipment and emergency exits.

First aid

Emergency exit

2.9.5 Fire protection signs

Characteristics of fire protection signs:
- Square
- No rim
- Red background
- White pictogram

LWN/LR.x/V03.01//Auslieferung/2015-06-03/en

copyright by LIEBHERR

Fire protection signs mark the location of fire alarms or fire extinguishing equipment.

Fire extinguishers

Fire detector

2.10 Meaning of machine-specific signs

2.10.1 Safety signs

Warning indicating rotating machine parts

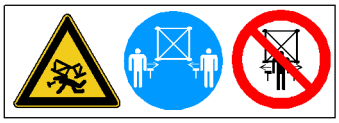

Do not stand inside the boom sections

Keep your distance to the machine if it is operated with the radio remote control

Lifting load using the rope reeving winch is prohibited

No access for unauthorised personnel

LWN/LR.x/V03.01//Auslieferung/2015-06-03/en

copyright by
LIEBHERR

Danger of crushing

Standing within the slewing range is prohibited

Warning indicating dangerous electrical voltage

Warning indicating dangerous electrical voltage

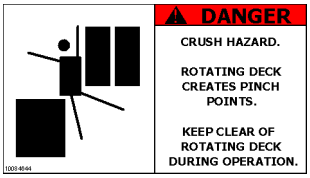

Standing within the slewing range is prohibited

2.10.2 Notice signs

Fuel up with diesel

Prior to fueling turn off auxiliary heating* and external air conditioning system*

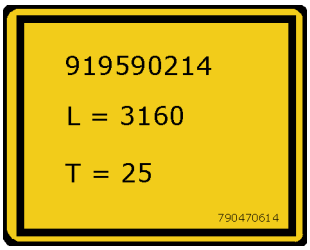

Technical data falling-back supports

LWN/LR.x/V03.01//Auslieferung/2015-06-03/en

copyright by
LIEBHERR

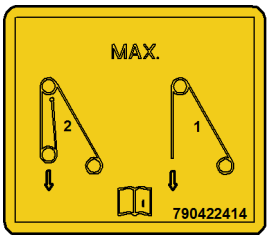

Observe auxiliary jib reeving

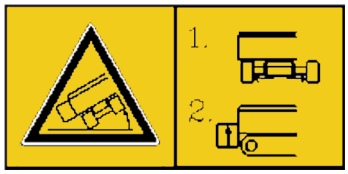

Caution danger of toppling

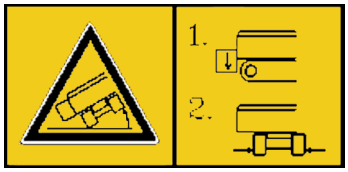

Caution danger of toppling

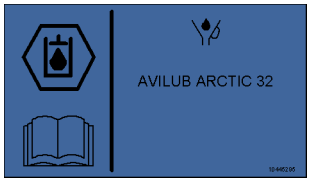

Initial filling of hydraulic oil

Designed and tested in accordance with ANSI B 30.5

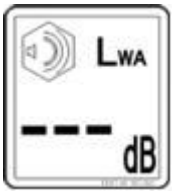

Guaranteed sound output level L_{WA} of machine

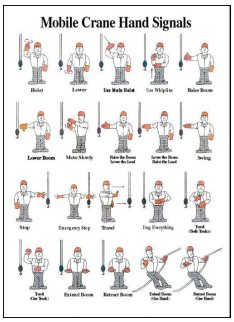

Hand signs in acc. with ASME/ANSI B30.5

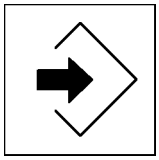

Data recording

LWN/LR.x/V03.01//Auslieferung/2015-06-03/en

Liebherr data recording

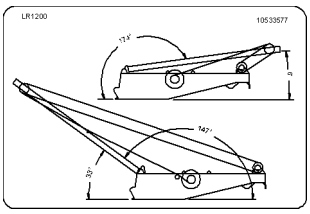

Angle limitation A-frame1

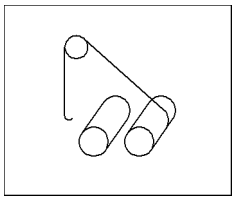

Grease nipple - winch 1

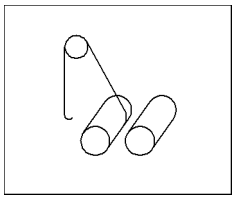

Grease nipple - winch 2

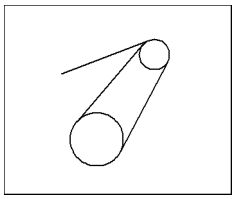

Grease nipple - main boom winch

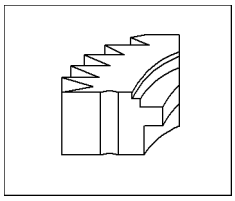

Grease nipple - swing ring

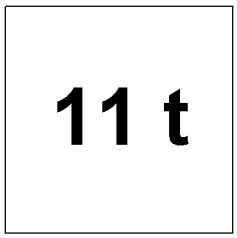

Weight details stops

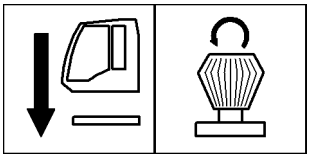

Emergency lowering valve cabin elevation

LWN/LR.x/V03.01//Auslieferung/2015-06-03/en

copyright by
LIEBHERR

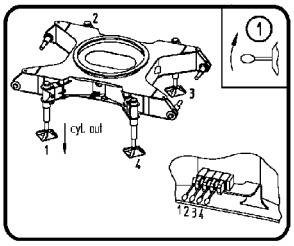

Support cylinder undercarriage

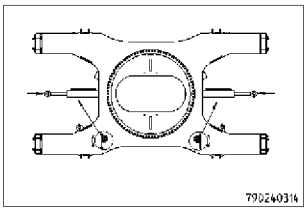

Track width adjustment cylinder undercarriage

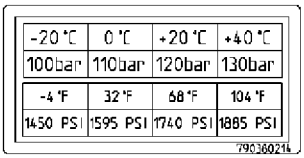

-20 °C	0 °C	+20 °C	+40 °C
100bar	110bar	120bar	130bar
-4 °F	32 °F	68 °F	104 °F
1450 PSI	1595 PSI	1740 PSI	1885 PSI

Pressure store jib

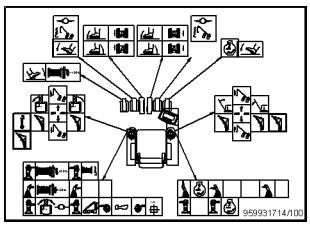

Pictogram cross control lever

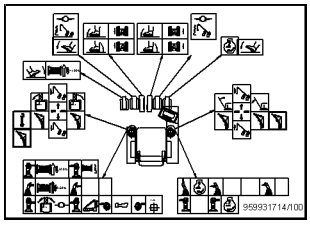

Pictogram double T-control lever

Operation with both booms

Lifting point

LWN/LR.x/V03.01//Auslieferung/2015-06-03/en

copyright by
LIEBHERR

Lashing points

Only use synthetic round slings here

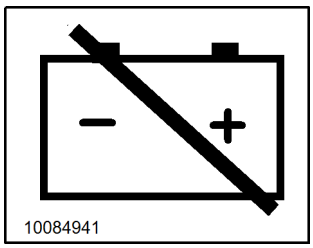

Main battery switch

2.11 Hazards

2.11.1 Mechanical action

WARNING
Mechanical actions due to moving machinery!
When operating the machine, numerous hazards and situations can arise that can cause life-threatening injuries.

▶ Observe handling and situation-specific safety notes.

Note
Observe the following safety notes:

▶ Wear suitable personal protective equipment.

▶ Only work on non-moving parts.

Examples of mechanical actions:

Standing under a suspended load.

Danger of being drawn in by moving drive units or machine parts.

LWN/LR.x/V03.01//Auslieferung/2015-06-03/en

copyright by
LIEBHERR

Danger of falling when working without safety gear.

Danger of crushing due to unsecured components such as doors or sliding elements.

First aid

1. Protection/personal safety
   - Identify - what is the nature of the emergency?
   - Think - what are the dangers for the injured party or the helper?
   - Act - make the situation safe.
2. Emergency call
3. Emergency life-saving measures
   - Recovery position
   - Cardiac massage, artificial respiration and defibrillation
   - Staunch bleeding, shock prevention
4. Additional first aid

2.11.2 Electrical energy

WARNING
Electricity in conductive machine parts!

▶ Observe handling and situation-specific safety notes.

Note
Observe the following safety notes:

▶ Only carry out work with the electrical supply switched off.

▶ Secure the machine to prevent unauthorised startup.

Examples of electrical energy:

– External power supply
– Generator

WARNING
Live machine parts!
risk of electric shock.

▶ Before recovering an injured party ensure that there is no further risk of electrocution.

First aid

1. Protection/personal safety
   - Identify - what is the nature of the emergency?
   - Think - what are the dangers for the injured party or the helper?
   - Act - make the situation safe.
2. Emergency call
3. Emergency life-saving measures
   - Recovery position

LWN/LR.x/V03.01//Auslieferung/2015-06-03/en

- Cardiac massage, artificial respiration and defibrillation
- Staunch bleeding, shock prevention

4. Additional first aid

Note

▶ Seek medical attention after electrical accidents. The person affected may experience symptoms of an irregular heartbeat some time after the accident.

2.11.3 Hydraulic energy

WARNING
Escaping hydraulic oil under high pressure!
Leakages in hydraulic lines can cause injuries to skin, destroy tissue and can cause blood poisoning due to the high pressures involved.

▶ Observe handling and situation-specific safety notes.

Note
Observe the following safety notes:

▶ Repairs to hydraulic systems may only be carried out by qualified technicians with specialised knowledge and experience of hydraulics.

▶ Before starting work ensure that the whole system has been depressurised.

▶ Never attempt to locate the leakage point with your hand or other part of the body

▶ Damaged hydraulic components must be replaced immediately with original Liebherr spare parts.

Examples of hydraulic energy:

Tissue damage from leaks.

Sepsis from hydraulic oil entering bloodstream.

First aid

1. Protection/personal safety
   - Identify - what is the nature of the emergency?
   - Think - what are the dangers for the injured party or the helper?
   - Act - make the situation safe.
2. Emergency call
3. Emergency life-saving measures
   - Recovery position
   - Cardiac massage, artificial respiration and defibrillation
   - Staunch bleeding, shock prevention
4. Additional first aid
   - Gently cover injured area(s) with a sterile anti-bacterial bandage.
   - Rinse eyes with pure drinking water.

LWN/LR.x/V03.01//Auslieferung/2015-06-03/en

copyright by LIEBHERR

2.11.4 Burns

CAUTION
Contact with hot surfaces and consumables!
High surface and equipment temperatures can lead to burns or scalding.

▶ Observe handling and situation-specific safety notes.

Note
Observe the following safety notes:

▶ Always wear suitable protective gloves when working on hot components.

▶ Only carry out work on the machine after it has cooled down and is stopped.

Examples of burns and scalding:

Burns from contact with the entire drive system.

Scalding from steam exiting from the cooling system or hydraulic oil from the drive system.

First aid

1. Protection/personal safety
   - Identify - what is the nature of the emergency?
   - Think - what are the dangers for the injured party or the helper?
   - Act - make the situation safe.
2. Emergency call
3. Emergency life-saving measures
   - Recovery position
   - Cardiac massage, artificial respiration and defibrillation
   - Staunch bleeding, shock prevention
4. Additional first aid
   With first-degree burns (redness of the skin):
   - Cool the affected body part by rinsing with cold fresh water.
   - Gently cover injured area(s) with a sterile anti-bacterial bandage.

   With second-degree burns (blisters on the skin):
   - Cool the affected body part by rinsing with cold fresh water.
   - Gently cover the area using a sterile anti-bacterial bandage. Do not apply pressure.

   With third-degree burns (charring of the skin and tissue):
   - Gently cover the area using a sterile anti-bacterial bandage. Do not apply pressure.

LWN/LR.x/V03.01//Auslieferung/2015-06-03/en

copyright by
LIEBHERR

2.11.5 Chemical burns

CAUTION
Contact with corrosive consumables!
Acids and bases cause chemical burns to skin and tissue, and blindness if they come in contact with the eye.
Acids and bases will damage clothing.

▶ Observe handling and situation-specific safety notes.

Note
Observe the following safety notes:

▶ When working with acids always wear suitable safety goggles or face protection, protective clothing and gloves.

Examples of chemical burns:

Chemical burns from handling acidic consumables.

Chemical burns from leaking battery acid.

First aid

1. Protection/personal safety
   - Identify - what is the nature of the emergency?
   - Think - what are the dangers for the injured party or the helper?
   - Act - make the situation safe.
2. Emergency call
3. Emergency life-saving measures
   - Recovery position
   - Cardiac massage, artificial respiration and defibrillation
   - Staunch bleeding, shock prevention
4. Additional first aid
   - Removing clothing from injured body parts.
   - Rinse injured areas with drinking water.
   - Gently cover the area with a sterile anti-bacterial bandage.

2.11.6 Fire and explosion

WARNING
No fire, naked flames or electrostatic discharges!
Danger of fire and danger of explosion due to easily flammable operating materials or gas mixtures resulting from these.

▶ Observe handling-specific and situation-specific safety notes.

LWN/LR.x/V03.01//Auslieferung/2015-06-03/en

copyright by LIEBHERR

WARNING
Improper handling of the machine in dusty environments (e.g. dust formation when unloading bulk goods)!
Increased risk of fire.

- ▶ Make sure that the operator prevents dust formation through technical or organizational measures.
- ▶ Shorten cleaning intervals and maintenance intervals.

Note
Observe the following safety notes:

- ▶ Do not store any flammable materials or carry them in the machine, only in fireproof containers.
- ▶ Wipe any spilled diesel fuel off the machine and neutralise it on the ground with bonding agents
- ▶ Do not clean the machine with flammable fluids.
- ▶ Do not store any cleaning cloths in the engine compartment and remove flammable residues, e.g. oil spills, coal dust and paper residues.
- ▶ Only fuel up the machine in a well-ventilated place or ensure fresh air supply.
- ▶ Make sure there is good metallic contact between the pump nozzle and the filler neck during refuelling. If possible, ground the machine at the fuelling station while it is being refuelled.
- ▶ No open fire when handling flammable materials.

Examples for dangers of fire and dangers of explosion:

Escaped fuel is a fire hazard.

- Detonating gas in combination with a spark when charging or discharging batteries.
- Vapourised fuel in combination with an electrostatic discharge between the machine and the fuel rig.

First aid

1. Protection/personal safety
   - Identify - what is the nature of the emergency?
   - Think - what are the dangers for the injured party or the helper?
   - Act - make the situation safe.
2. Emergency call
3. Emergency life-saving measures
   - Recovery position
   - Cardiac massage, artificial respiration and defibrillation
   - Staunch bleeding, shock prevention
4. Additional first aid
   - (For more information see: 2.11.4 Burns, page 576)
   - (For more information see: 2.12.3 Firefighting, page 593)

LWN/LR.x/V03.01//Auslieferung/2015-06-03/en

copyright by
LIEBHERR

2.11.7 Poisoning and suffocation

WARNING
Inadequate ventilation or fresh air!
Poisonous vapours or other atmospheres hazardous to health can lead to poisoning or suffocation.

▶ Observe handling and situation-specific safety notes.

Note
Observe the following safety notes:

▶ Ensure adequate ventilation in the cab.

▶ Use breathing apparatus when working with hazardous materials.

Examples of poisoning and dangers of asphyxiation:

– Engine exhaust gases contain carbon monoxide and other hazardous gases.
– If the machine is used in areas where hazardous substances are present, contact with hazardous gases is a possibility.
– The refrigerant from the air conditioning system circuit displaces the oxygen in the air.

First aid

1. Protection/personal safety
   - Identify - what is the nature of the emergency?
   - Think - what are the dangers for the injured party or the helper?
   - Act - make the situation safe.
2. Emergency call
3. Emergency life-saving measures
   - Recovery position
   - Cardiac massage, artificial respiration and defibrillation
   - Staunch bleeding, shock prevention
4. Additional first aid

2.11.8 Electromagnetic influence

WARNING
Electromagnetic influence when the machine is deployed near transmitting stations, radar stations or directional radio systems!
Malfunctions or failure of electronic implants (pacemakers).
Malfunction or failure of the control system.

▶ Observe handling and situation-specific safety notes.

Note
Observe the following safety notes:

▶ The machine must be stopped if there is suspected electromagnetic interference to the controls.

Examples of electromagnetic influence:
– Malfunction or failure of control systems if operating the machine near transmitters, directional radio systems or radar stations.
– Environmental influence through the use of electromagnetic rigging material or integrated radio devices.

LWN/LR.x/V03.01//Auslieferung/2015-06-03/en

copyright by LIEBHERR

2.11.9 Exposure to wind

DANGER
Exposure to wind can have fatal consequences!
Machine toppling over, structural breakdown.

- Observe handling-specific and situation-specific safety notes.

DANGER
Inadmissible machine operation when exceeding the maximum permitted wind speed according to foreword of the valid load chart!
Machine toppling over, structural breakdown.

- Make sure that the machine is only operated at admissible wind speeds.
- In case of higher wind speeds, reduce load, put boom into parked position, lay boom down (For more information see: 6.7 Restrictions due to exposure to wind, page 1055) .

Note
Observe the following safety notes:

- Make sure that each lifting operation is planned and performed by trained and experienced personnel.
- Prior to each load, carefully determine and consider the geometric form factor (air resistance factor) and the projection of the streamed surface.
- Observe that the wind speed is entered squared in the calculation of the wind load. A slight increase of the wind speed results in an enormous increase of the wind load.
- Keep in mind that cat walks fitted to boom sections magnify the wind load.
- Note that the wind speed, shape and size of the load have an essential influence on the stability and load of the machine (see: tab. 342, page 585) .
- Inform yourself about wind conditions at the work site (ground profiles and building profiles, areas with slipstream, meteorological data, relevant ambient conditions) as well as weather forecasts for the planned working time and take these into consideration.
- Inform yourself about the weather report and the current wind speed at the site where the machine is operating before starting work. If excessive wind speeds are expected within the next few hours, work must not start and precautions must be taken to protect against storm damage.
- Observe admissible wind speeds and the prescribed reductions of the load in the foreword of the valid load chart.
- Note that the area exposed to wind of the load considered in the load calculation is 1.2 m^2/t (cw value as factor already considered). If the load's area that is exposed to wind is larger: Calculate maximum permissible wind speed (see: fig. 715, page 584) or contact Liebherr customer service. Loads may not be picked up until this evaluation has been performed.
- Check current wind speed on the monitor in the cabin.
- Watch out for dangerous gusts of wind during operation.
- Hoist the loads slowly and carefully and do not let them become unstable.

LWN/LR.x/V03.01//Auslieferung/2015-06-03/en

copyright by
LIEBHERR

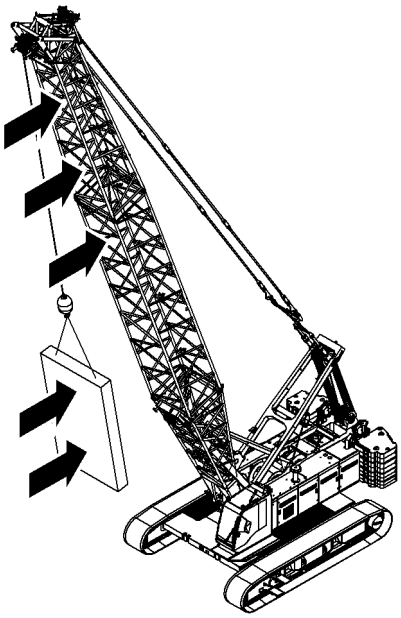

Fig. 712: Exposure to wind on the front of the machine and the load (illustration of principle)

Exposure to wind on the front of the machine and the load has the following effects:
– reduced stability of the machine.
– Higher risk of machine toppling.
– With maximum main boom angle without load, tilting-back supports may be overstrained and main boom may be destroyed.
– Load swings and damages or destroys main boom.

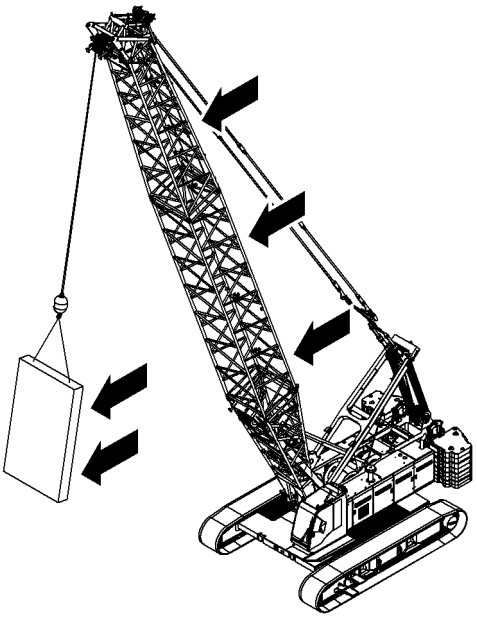

Fig. 713: Exposure to wind on the rear of the machine and the load (illustration of principle)

Exposure to wind on the rear of the machine and the load has the following effects:
– reduced stability of the machine.
– Higher risk of machine toppling.
– Wind load behaves like an additional load on the load hook or pulley block.

LWN/LR.x/V03.01//Auslieferung/2015-06-03/en

copyright by
LIEBHERR

– Pivoting radius becomes larger.
– Load swings and damages or destroys main boom.

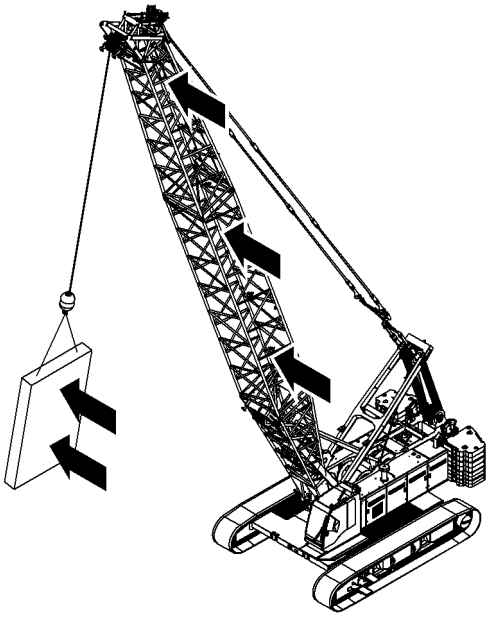

Fig. 714: Exposure to wind on the side of the machine and the load (illustration of principle)

Exposure to wind on one side of the machine and the load has the following effects:
– reduced stability of the machine.
– Higher risk of machine toppling.
– Additional diagonal pull is generated.
– Failure of main boom structure.
– Load swings and damages or destroys main boom.

Note
For rough estimation of the wind speed at maximum boom height:

▶ Ask the weather office in charge for the maximum wind speed to be expected.

▶ Observe that the values communicated by the weather office are often averaged wind speeds.

▶ Determine the 3 second wind gust speed at maximum boom height with averaged values by the weather office and the following chart.

▶ Make sure that the machine is only operated at permissible wind speeds in accordance with the foreword of the load chart.

Beaufort degree	**3**	**4**	**5**	**6**	**7**	**8**	**9**	**10**
v(d) A)	**5.4 m/s 17.72 ft/s**	**7.9 m/s 25.92 ft/s**	**10.7 m/s 35.1 ft/s**	**13.8 m/s 45.28 ft/s**	**17.1 m/s 56.1 ft/s**	**20.7 m/s 67.91 ft/s**	**24.4 m/s 80.05 ft/s**	**28.4 m/s 93.18 ft/s**
z B)	**v(z) C)**							
10 m 32‘ 10“ ft-in	7.6 m/s 24.93 ft/s	11.1 m/s 36.42 ft/s	15.0 m/s 49.21 ft/s	19.3 m/s 63.32 ft/s	23.9 m/s 78.41 ft/s	29.0 m/s 95.14 ft/s	34.2 m/s 112.2 ft/s	39.8 m/s 130.58 ft/s

LWN/LR.x/V03.01//Auslieferung/2015-06-03/en

copyright by LIEBHERR

Beaufort degree	3	4	5	6	7	8	9	10
v(d) A)	5.4 m/s 17.72 ft/s	7.9 m/s 25.92 ft/s	10.7 m/s 35.1 ft/s	13.8 m/s 45.28 ft/s	17.1 m/s 56.1 ft/s	20.7 m/s 67.91 ft/s	24.4 m/s 80.05 ft/s	28.4 m/s 93.18 ft/s
z B)	v(z) C)							
20 m 65‘ 7“ ft-in	8.1 m/s 26.57 ft/s	11.9 m/s 39.04 ft/s	16.1 m/s 52.82 ft/s	20.7 m/s 67.91 ft/s	25.7 m/s 84.32 ft/s	31.1 m/s 102.03 ft/s	36.6 m/s 120.08 ft/s	42.7 m/s 140.09 ft/s
30 m 98‘ 5“ ft-in	8.5 m/s 27.89 ft/s	12.4 m/s 40.68 ft/s	16.8 m/s 55.12 ft/s	21.6 m/s 70.87 ft/s	26.8 m/s 87.93 ft/s	32.4 m/s 106.3 ft/s	38.2 m/s 125.33 ft/s	44.5 m/s 146 ft/s
40 m 131‘ 3“ ft-in	8.7 m/s 28.54 ft/s	12.8 m/s 41.99 ft/s	17.3 m/s 56.76 ft/s	22.3 m/s 73.16 ft/s	27.6 m/s 90.55 ft/s	33.4 m/s 109.58 ft/s	39.4 m/s 129.27 ft/s	45.8 m/s 150.26 ft/s
50 m 164‘ ft-in	8.9 m/s 29.2 ft/s	13.1 m/s 42.98 ft/s	17.7 m/s 58.07 ft/s	22.8 m/s 74.8 ft/s	28.3 m/s 92.85 ft/s	34.2 m/s 112.2 ft/s	40.3 m/s 132.22 ft/s	46.9 m/s 153.87 ft/s
60 m 196‘ 10“ ft-in	9.1 m/s 29.86 ft/s	13.3 m/s 43.64 ft/s	18.0 m/s 59.06 ft/s	23.3 m/s 76.44 ft/s	28.8 m/s 94.49 ft/s	34.9 m/s 114.5 ft/s	41.1 m/s 134.84 ft/s	47.9 m/s 157.15 ft/s
70 m 229‘ 8“ ft-in	9.3 m/s 30.51 ft/s	13.5 m/s 44.29 ft/s	18.3 m/s 60.04 ft/s	23.6 m/s 77.43 ft/s	29.3 m/s 96.13 ft/s	35.5 m/s 116.47 ft/s	41.8 m/s 137.14 ft/s	48.7 m/s 159.78 ft/s
80 m 262‘ 6“ ft-in	9.4 m/s 30.84 ft/s	13.7 m/s 44.95 ft/s	18.6 m/s 61.02 ft/s	24.0 m/s 78.74 ft/s	29.7 m/s 97.44 ft/s	36.0 m/s 118.11 ft/s	42.4 m/s 139.11 ft/s	49.4 m/s 162.07 ft/s
90 m 295‘ 3“ ft-in	9.5 m/s 31.17 ft/s	13.9 m/s 45.6 ft/s	18.8 m/s 61.68 ft/s	24.3 m/s 79.72 ft/s	30.1 m/s 98.75 ft/s	36.4 m/s 119.42 ft/s	42.9 m/s 140.75 ft/s	50.0 m/s 164.04 ft/s
100 m 328‘ 1“ ft-in	9.6 m/s 31.5 ft/s	14.1 m/s 46.26 ft/s	19.1 m/s 62.66 ft/s	24.6 m/s 80.71 ft/s	30.4 m/s 99.74 ft/s	36.9 m/s 121.06 ft/s	43.4 m/s 142.39 ft/s	50.6 m/s 166.01 ft/s
110 m 360‘ 11“ ft-in	9.7 m/s 31.82 ft/s	14.2 m/s 46.59 ft/s	19.2 m/s 62.99 ft/s	24.8 m/s 81.36 ft/s	30.8 m/s 101.05 ft/s	37.2 m/s 122.05 ft/s	43.9 m/s 144.03 ft/s	51.1 m/s 167.65 ft/s
120 m 393‘ 8“ ft-in	9.8 m/s 32.15 ft/s	14.3 m/s 46.92 ft/s	19.4 m/s 63.65 ft/s	25.1 m/s 82.35 ft/s	31.1 m/s 102.03 ft/s	37.6 m/s 123.36 ft/s	44.3 m/s 145.34 ft/s	51.6 m/s 169.29 ft/s
130 m 426‘ 6“ ft-in	9.9 m/s 32.48 ft/s	14.5 m/s 47.57 ft/s	19.6 m/s 64.3 ft/s	25.3 m/s 83.01 ft/s	31.3 m/s 102.69 ft/s	37.9 m/s 124.34 ft/s	44.7 m/s 146.65 ft/s	52.0 m/s 170.6 ft/s
140 m 459‘ 4“ ft-in	10.0 m/s 32.81 ft/s	14.6 m/s 47.9 ft/s	19.8 m/s 64.96 ft/s	25.5 m/s 83.66 ft/s	31.6 m/s 103.67 ft/s	38.2 m/s 125.33 ft/s	45.1 m/s 147.97 ft/s	52.5 m/s 172.24 ft/s
150 m 492‘ 2“ ft-in	10.0 m/s 32.81 ft/s	14.7 m/s 48.23 ft/s	19.9 m/s 65.29 ft/s	25.7 m/s 84.32 ft/s	31.8 m/s 104.33 ft/s	38.5 m/s 126.31 ft/s	45.4 m/s 148.95 ft/s	52.9 m/s 173.56 ft/s
160 m 524‘ 11“ ft-in	10.1 m/s 33.14 ft/s	14.8 m/s 48.56 ft/s	20.1 m/s 65.94 ft/s	25.9 m/s 84.97 ft/s	32.1 m/s 105.31 ft/s	38.8 m/s 127.3 ft/s	45.7 m/s 149.93 ft/s	53.2 m/s 174.54 ft/s
170 m 557‘ 9“ ft-in	10.2 m/s 33.46 ft/s	14.9 m/s 48.88 ft/s	20.2 m/s 66.27 ft/s	26.0 m/s 85.3 ft/s	32.3 m/s 105.97 ft/s	39.1 m/s 128.28 ft/s	46.0 m/s 150.92 ft/s	53.6 m/s 175.85 ft/s
180 m 590‘ 7“ ft-in	10.3 m/s 33.79 ft/s	15.0 m/s 49.21 ft/s	20.3 m/s 66.6 ft/s	26.2 m/s 85.96 ft/s	32.5 m/s 106.63 ft/s	39.3 m/s 128.94 ft/s	46.3 m/s 151.9 ft/s	53.9 m/s 176.84 ft/s
190 m 623‘ 4“ ft-in	10.3 m/s 33.79 ft/s	15.1 m/s 49.54 ft/s	20.4 m/s 66.93 ft/s	26.4 m/s 86.61 ft/s	32.7 m/s 107.28 ft/s	39.5 m/s 129.59 ft/s	46.6 m/s 152.89 ft/s	54.2 m/s 177.82 ft/s
200 m 656‘ 2“ ft-in	10.4 m/s 34.12 ft/s	15.2 m/s 49.87 ft/s	20.6 m/s 67.59 ft/s	26.5 m/s 86.94 ft/s	32.8 m/s 107.61 ft/s	39.8 m/s 130.58 ft/s	46.9 m/s 153.87 ft/s	54.6 m/s 179.13 ft/s

Tab. 341: 3 second wind gust speed in dependence of average wind speed according to Beaufort scale and height

A) Wind speed **v(d)** at 10 m (32‘ 10“ ft-in) height (top limit of Beaufort stage) averaged over 10 minutes.

copyright by LIEBHERR

B) Height **z** above level ground.
C) Speed **(v)z** of a 3 second wind gust acting at a height of **z** decisive for the calculation.

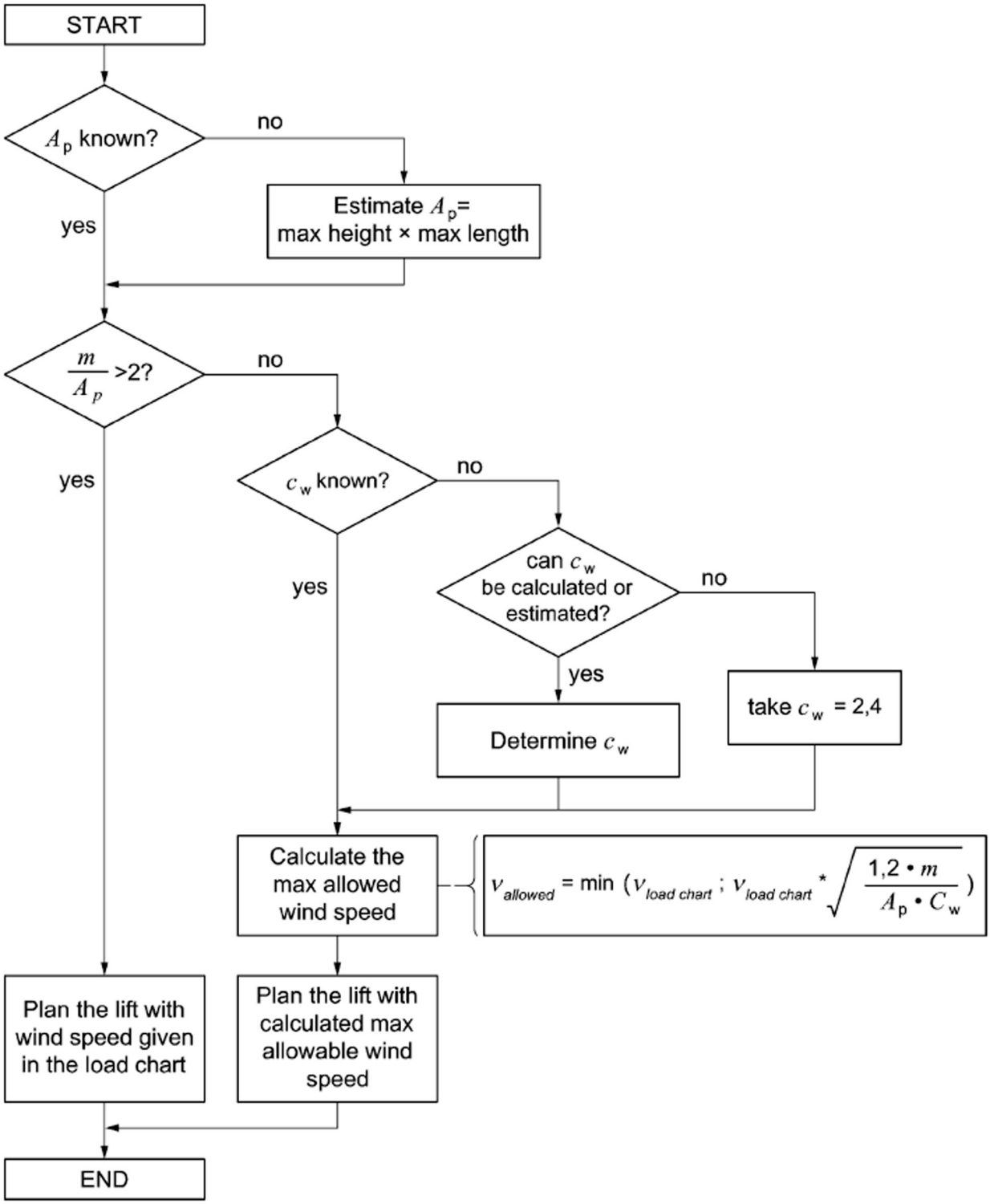

Fig. 715: Simplified procedure for determining the maximum permissible wind speed

m Working load

A_p Projected area

c_w Drag coefficient

LWN/LR.x/V03.01//Auslieferung/2015-06-03/en

copyright by LIEBHERR

$\mathbf{v}_{allowed}$ Maximum 3-second wind gust speed on boom head in [m/s]

$\mathbf{v}_{load\ chart}$ Wind speed from the load chart in [m/s]

Shape	Example	Drag coefficient: c_W
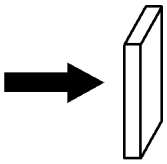	Slab, formwork or sheet pile	1.1 to 2.0
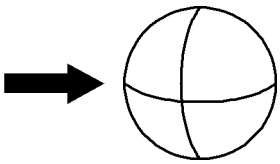	Sphere, sphere-shaped container	0.3 to 0.4
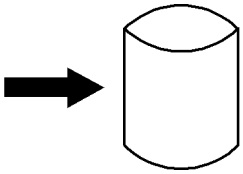	Silo, reactor container	0.6 to 1.0
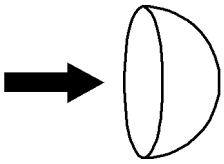	Semi-sphere	0.8 to 1.2
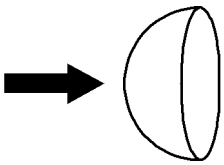	Semi-sphere	0.2 to 0.3
	Wind generator blade or complete rotor	0.05 to 0.1
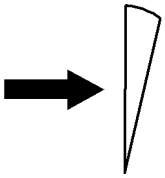	Wind generator blade or complete rotor	Approximately 1.6

Tab. 342: Typical shapes and the corresponding c_w values

2.11.10 Snow and ice loads

DANGER
Snow or ice on the machine!
Structural breakdown.

▶ Observe handling and situation-specific safety notes.

LWN/LR.x/V03.01//Auslieferung/2015-06-03/en

copyright by LIEBHERR

WARNING
Falling chunks of snow and ice!
Serious injury.

- Make sure that the boom is free of snow and ice.

Note
Observe the following safety notes:

- Lay down the boom and carefully remove any large accumulations of ice and snow.
- Remove snow and ice from all sensitive parts like e.g. limit switches and guides.
- Snow and ice loads increase the boom weight and the area exposed to the wind.
- Avoid dynamic movement of the load: clear the load of snow and ice.

These factors lead to premature switching off of the Load Moment Limiter (LMB). Work with the maximum admissible load is no longer possible.

2.11.11 Ground bearing strength

DANGER
Ground has a limited bearing strength!
Machine toppling over.

- Carry out work planning.
- Observe handling and situation-specific safety notes.

Note
Observe the following safety notes:

- Values for permitted ground pressure must be determined by officially-certified specialist engineers.
- During work planning, calculate the ground pressure exerted when the machine is in use. Observe the values in the valid load chart and/or request the required data from the manufacturer.
- Use crane mats if necessary.
- Reinforce the ground if necessary.

DANGER
Improper use of crane mats!
Machine toppling over.

- Lay crane mats next to each other without any gaps between them.
- Place digger mats diagonal to the crawler chain.
- Ensure that the crawler side frames lie fully on the crane mats.

LWN/LR.x/V03.01//Auslieferung/2015-06-03/en

copyright by
LIEBHERR

2.11.12 Lightning strike

WARNING
Electric shock from lightning!
Coming into contact with a direct or indirect current flow caused by a voltage flash-over or step voltage can be fatal.
Fall hazard when working at heights.
It can also cause a total loss of control, damage to the electronics or to local welding spots on supports, especially on the swing ring.

▶ Observe handling-specific and situation-specific safety notes.

Note
Observe the following safety notes:

▶ Lay down the boom before a storm breaks.

▶ Disconnect electric lines and main boom base section from uppercarriage.

▶ Always stay away from large, free-standing metal parts (e.g. machine) during a thunderstorm.

▶ Machines without direct contact between steel structure and ground must be grounded.

▶ Only evacuate the cab in the case of fire.

The closed machine operator's cab acts as a Faraday cage. The charge is channeled through the machine and into the ground.

Promptly lay down the boom if any of the following criteria apply:
– On sites that experience frequent storms
– With long boom combinations
– On exposed sites

Measures to take after a lightning strike on the machine has been observed or is suspected:
– Thoroughly inspect the machine paying particular attention to any damaged cables, hoses and ropes.
– Check the operational capability of the control system.
– Slowly move the slewing gear and listen for any unusual noises.
– Inspect the boom for damage.
– Contact Liebherr after sales service.

First aid

1. Protection/personal safety
   - Identify - what is the nature of the emergency?
   - Think - what are the dangers for the injured party or the helper?
   - Act - make the situation safe.
2. Emergency call
3. Emergency life-saving measures
   - Recovery position
   - Cardiac massage, artificial respiration and defibrillation
   - Staunch bleeding, shock prevention
4. Additional first aid
   - (For more information see: 2.12.1 How to respond in the event of a current transfer, page 591)

LWN/LR.x/V03.01//Auslieferung/2015-06-03/en

copyright by
LIEBHERR

2.11.13 Overhead power lines

WARNING
Electrical energy and fire hazard!
Coming into contact with a direct or indirect current flow caused by a voltage flash-over or step voltage can be fatal.

▶ Observe handling and situation-specific safety notes.

Note
Observe the following safety notes:

▶ Inform power supply company before starting work. The power supply company representative issues written approval for setting up and operating the machine.

▶ Maintain a safe distance as specified in national guidelines or by a representative from the power supply company.

▶ Make sure that the danger zone of the machine does not overlap with the prescribed safety distance.

▶ Inform all employees on the site where the machine is to be used about the dangers of electrical voltage.

▶ When operating the machine look out for uneven ground as this can reduce the clearance to the power line.

▶ Assign a signalman to observe the machine and the line, monitor the safe distance and maintain continuous contact with the machine operator.

Examples of current transfer from overhead power lines:
– Coming into direct contact with an overhead power line.
– If the safety distance is not maintained, an arc will form.
– An overhead power line comes down and a dangerous resistance area forms in the ground around it.

The safety systems of the different national electricity grids react differently in the event of a fault. One may not assume that the overhead power line will be automatically and permanently shut down after a short to earth. A resistance area develops around the machine and/or the damaged overhead power line (For more information see: 2.12.1 How to respond in the event of a current transfer, page 591) .

First aid

1. Protection/personal safety
   - Identify - what is the nature of the emergency?
   - Think - what are the dangers for the injured party or the helper?
   - Act - make the situation safe.
2. Emergency call
3. Emergency life-saving measures
   - Recovery position
   - Cardiac massage, artificial respiration and defibrillation
   - Staunch bleeding, shock prevention
4. Additional first aid
   - (For more information see: 2.12.1 How to respond in the event of a current transfer, page 591)

LWN/LR.x/V03.01/Auslieferung/2015-06-03/en

copyright by
LIEBHERR

Guideline values for safe distances from overhead power lines

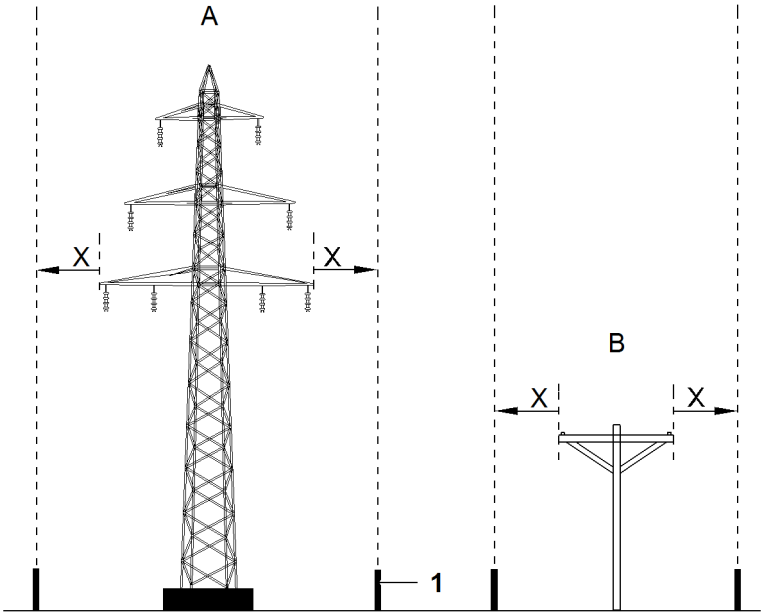

Fig. 733: Overhead power lines (diagram)

A High-voltage lines
B Low-voltage and medium-voltage lines
1 Shut-off

The necessary safe distance depends on the rated mains voltage of the power line.

Safety distances to overhead power lines are listed exemplary in ISO 12480-1 and OSHA Part 1926.

These are benchmark values. The respective nationally prescribed safety distances must be observed.

Exact information on nominal line voltage is provided by the power supply company.

Overhead power line		Safe distance X
B	Low-voltage lines	3000 mm 9‘ 10“ ft-in
	Medium-voltage lines	
A	High-voltage lines	6000 mm 19‘ 8“ ft-in

Tab. 343: Safety distances (acc. to ISO 12480-1 Cranes - Safe use)

Nominal line voltage	Safe distance X
up to 350 kV (350 kV)	6100 mm 20 ft
above 350 kV (350 kV)	15250 mm 50 ft

Tab. 344: Safety distances (acc. to Occupational Safety and Health Administration OSHA Part 1926.1408 and 1926.1409)

LWN/LR.x/V03.01//Auslieferung/2015-06-03/en

copyright by
LIEBHERR

2.11.14 Environment

NOTICE
Risk of damage to the environment caused by pollutants!
If their release is not controlled, fuels, oils, cleaning agents, coolant, etc. can enter the ground or rivers and cause environmental damage.

▶ Observe handling and situation-specific safety notes.

Note
Observe the following safety notes:

▶ If the machine leaks, immediately collect the escaping liquid and seal the leak.

▶ Bind any spilled liquid with binding agent or neutralise it with suitable agents.

▶ When draining or catching liquids use suitable containers (capacities and resistant to chemicals).

▶ Carry out cleaning work on firm well-drained ground.

▶ Observe the national and international environmental regulations for the disposal of chemicals or waste.

▶ Notify the emergency services and authorities if large amounts of substances that are harmful to the environment escape.

Examples of environmental hazards:
– Leakages
– Refilling consumables incorrectly

LWN/LR.x/V03.01//Auslieferung/2015-06-03/en

copyright by
LIEBHERR

2.12 What to do in dangerous situations

2.12.1 How to respond in the event of a current transfer

Resistance area, step voltage

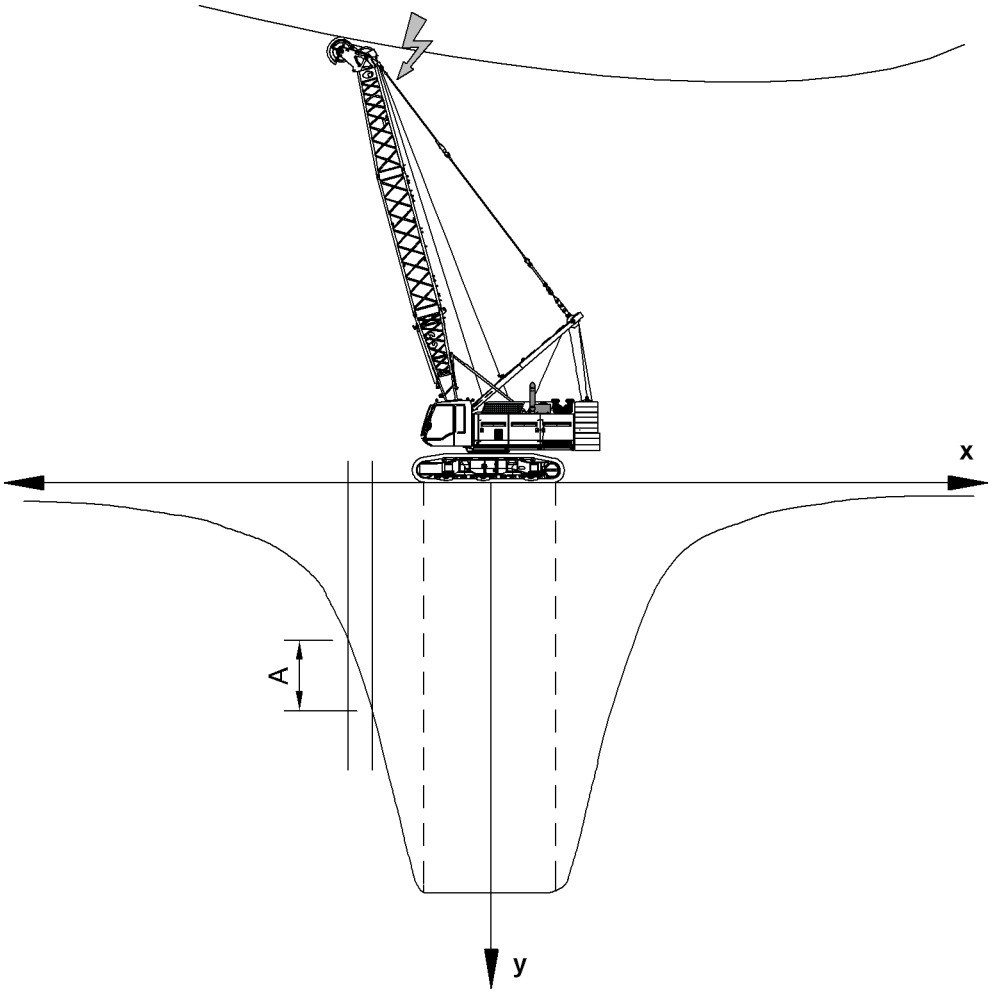

Fig. 735: Resistance area, step voltage

x Extent
y Voltage
A Step voltage

In the event that current is conducted to the machine from coming into contact with a power line, the current is distributed from the point of entry in the earth. The voltage decreases according to a funnel-shaped curve - a resistance area is formed.

The extent of the resistance area depends on:
– Voltage
– Current
– Ground resistance

If a person moves within the resistance area, a potential difference forms between his feet (step voltage **A**).

The step voltage increases:
– the closer the person is to the current transfer location.

LWN/LR.x/V03.01//Auslieferung/2015-06-03/en

copyright by
LIEBHERR

– the greater the step length.

First response to a current transfer

– Remain calm.
– Alert the relevant power supply company.

  Do not leave the cab.
  - It is relatively safe to remain in the closed operator's cab as it acts as a Faraday cage.
  - Only evacuate the cab in the case of fire.

– If the Litronic control system is still functioning:
  - Move the machine out of the danger area.
  - Remain in the cab until current is no longer being conducted through the machine.

Leaving the machine in event of current transfer with fire

– Never touch live parts of the machine (hoist rope, load, crawler, etc) if you are in contact with the ground.
– Jump in a direction that avoids any contact with live parts.
– Jump to a safe distance from the machine and land on both feet at the same time.
– Land on both feet at the same time with legs closed (do not straddle).
– Never hold on to the machine or any live parts.
– Hop away on both feet with both legs pressed together.
– While hopping away, keep well clear of any live parts.

First aid

– Alert the emergency services.
– Personnel are to rescued by experts only.

Note

▶ Seek medical attention after electrical accidents. The person affected may experience symptoms of an irregular heartbeat some time after the accident.

2.12.2 How to respond in the event of a fire

WARNING
Incorrect behaviour in event of fire!

▶ Observe handling and situation-specific safety notes.

– Switch off the engine.
– Alert the emergency services.
– Move people out of the danger zone, administer first aid if required (For more information see: 2.11.4 Burns, page 576) .
– Only start to fight the fire if there is no risk to your personal safety (For more information see: 2.12.3 Firefighting, page 593) .

LWN/LR.x/V03.01/Auslieferung/2015-06-03/en

copyright by LIEBHERR

WARNING
Danger of backflash!
Even if the fire appears to be extinguished, escaping fuel or oil coming in contact with hot components may reignite.

Once the risk of backflashing no longer persists:
▶ Start assessing the damage.

2.12.3 Firefighting

Fire classes

WARNING
Appropriate extinguishers must be used!
If unsuitable extinguishers are used, they may be ineffective or even introduce additional hazards.

▶ Use an extinguisher that is appropriate for the fire class.

Fires involving solid and chiefly organic materials that normally smoulder

Fires involving liquids or liquefying materials

Fires involving gases

Fires involving metals

Use of the fire extinguisher

Note
Fire extinguishers are subject to national regulations!

▶ Arrange for the plant operator to provide fire extinguishers, replace them as necessary and inspect them periodically.

– Take fire extinguishers on the machine off the holders and ready them for operation.
– Fight the source of the fire with several short bursts.
– While fighting the fire, ask your colleagues to alert the fire brigade.

LWN/LR.x/V03.01//Auslieferung/2015-06-03/en

copyright by
LIEBHERR

Incorrect	Correct
	Fight the fire with the wind behind you
	Extinguish the fire from the front to the back and from the bottom to the top
	But: Extinguish dropping and liquid fires from the top to the bottom
	Do not use extinguishers in succession but use several extinguishers at the same time
	Make sure that the fire does not reignite - always extinguish glowing embers with water

LWN/LR.x/V03.01//Auslieferung/2015-06-03/en

copyright by LIEBHERR

Incorrect	Correct
	Do not put the fire extinguishers back in place after use - refill them

Tab. 345: Use of the fire extinguisher

2.13 Working at heights

WARNING
Working at heights without precautions!
Fall from machine.

▶ Only perform work on the machine on the ground.

If work at heights is necessary:
▶ Secure yourself against falling.

▶ Observe international and national regulations.

Note

Liebherr recommends:
▶ When working at heights use suitable working platforms.

2.14 Application on floating devices

Liebherr crawler cranes were exclusively developed as assembly cranes and are designed for a limited number of load cycles.

The crane structure was constructed and calculated under assumption of certain conditions, like for example:
– No permanent use.
– Very slight dynamic influences through individual movements.
– Load conditions correspond to the standard EN 13000 “Cranes - Vehicle Cranes” and other similar standards.

Liebherr duty cycle crawler cranes are developed as transport cranes and intended for special use (e.g. grab operation).

Duty cycle crawler cranes are designed and calculated for higher dynamic influences, but are also subject to a limited number of load cycles. The construction of these duty cycle crawler cranes corresponds to the standard EN 474-12 “Earth-moving Machinery - Safety, Requirements for Cable Excavators” and other comparable standards.

LWN/LR.x/V03.01//Auslieferung/2015-06-03/en

copyright by
LIEBHERR

Liebherr crawler cranes and Liebherr duty cycle crawler cranes are not designed and developed for offshore conditions acc. to the standard EN 13852-2 “Cranes - Offshore Cranes”.

DANGER
Improper use of Liebherr crawler cranes and Liebherr duty cycle crawler cranes on floating devices!
Machine toppling over, structural breakdown.

- ▶ Observe the manufacturer's guidelines and regulations.
- ▶ Observe the industrial safety guidelines and regulations.
- ▶ Perform application planning and risk assessment.
- ▶ Observe international and national guidelines and regulations.

2.14.1 Operation of the machine on floating devices

DANGER
Improper operation of the machine on floating devices!
Machine toppling over, structural breakdown.

- ▶ Only operate the machine according to all following regulations.

In general, the machine must be operated the same way on floating devices as on land.

Operation of the machine on floating devices is only permitted at calm sea without waves.

The only admissible boom configurations are “main boom” or “main boom + auxiliary jib”. The use of main booms in combination with fixed or luffing jibs or with heavy load equipment like e.g. a derrick with suspended counterweight and/or wheeled counterweight carriage is prohibited.

The lifting and lowering of loads can be regarded the same way as operation on land under the following prerequisites:
– Calm sea.
– Minimal movement of the floating device.
– Load is constantly vertically suspended.
– There is no inadmissible diagonal pull due to a movement of the floating device.

The maximum admissible load according to the valid load chart may not be exceeded under any circumstances during operation. All notices in the foreword of the load chart must be observed.

The maximum longitudinal and diagonal incline of the floating device must be calculated by a shipbuilding engineer. The load must be reduced if the incline of the floating device exceeds 1% (0.57°). These reduced load charts (for inclines of 1°, 2° or 3°) are available from the Liebherr customer service. These incline charts are only valid for the boom configuration “main boom”. The maximum incline may never exceed 3°.

It is not permitted to lower the load hook or the pulley block below water level with crawler cranes.

With duty cycle crawler cranes, it is permissible to also work below water level with a specially suited load lifting device.

LWN/LR.x/V03.01/Auslieferung/2015-06-03/en

copyright by LIEBHERR

The decision of whether the conditions for operation on floating devices are given is at the sole discretion and responsibility of the operator. The manufacturer expressively recommends consulting a shipbuilding engineer.

The forces resulting from operation must be safely borne by the structure of the floating device.

Prior to operating the machine, the operator must ensure the following conditions:
– Machine is properly secured .
– All functional, technical and static interactions between the machine and the floating device are tested and approved.

2.14.2 Transport of the machine on floating devices

The operator bears sole responsibility for transporting the machine.

The machine must be secured while being transported on the floating device.

The machine must be secured on the floating device in such a way that the following consequences are ruled out:
– Damage to machine
– Sliding of machine
– Rotation of uppercarriage
– Capsizing of the floating device

Forces may result during transport through acceleration or deformation of the floating device. These forces may have an incalculable influence on the machine structure and impair the support structure, stability or service life of the machine, for example.

NOTICE
Improper transport of the machine on floating devices!
Damage to machine.

▶ Put down main boom.

▶ Secure main boom against lateral movement.

▶ Secure main boom against lifting.

▶ Make sure that the main boom is not distorted, because distortions of the floating device may lead to damage to the boom structure or machine.

▶ Deinstall counterweight from the uppercarriage and secure on floating device.

Erecting and dismantling the machine on the floating device is the sole responsibility of the operator.

2.14.3 Higher risk of machine corrosion on floating devices

The possibly higher risk of corrosion on machines in a maritime environment is the sole responsibility of the operator.

The following components may be damaged prematurely due to corrosion in a maritime environment (examples):
– Hydraulic cylinders
– Steel ropes
– Electric and electronic components
– Cabin

Therefore, the main components and the structure of the machine must be checked periodically by a qualified person.

LWN/LR.x/V03.01//Auslieferung/2015-06-03/en

copyright by
LIEBHERR

The machine structure may not come into direct contact with saltwater.

2.15 Use at low temperatures

The following measures must be performed and all requirements and conditions fulfilled when operating Liebherr duty cycle crawler cranes, crawler excavators and deep foundation machines at low temperatures.

Prerequisites for start-up at sub-zero temperatures:
- Ensure unobstructed view from the cabin. The cabin's windows are clean and the mirrors properly adjusted.
- Check that snow and ice have been removed from the cabin, uppercarriage, crawler side frames, platforms, limit switches, ropes, drums, pulleys, load, and also, where possible, from the booms and/or leader and accessory equipment.
- Sling gear is approved for the prevailing ambient temperatures.
- Load rigging points are approved for the prevailing ambient temperatures.
- Load drop-off site can safely bear the load and is permitted for the prevailing outdoor temperatures.

Conditions for operation at sub-zero temperatures:
- Use antifreeze.
- Heat machine to operating temperature.
- At the start, perform all machine movements without load to mix cold hydraulic oil with pre-heated hydraulic oil until the gearbox and its components are pre-heated to approx. 0 °C (32 °F).
- Do not subject the machine to any impact loads.
- Operate machine slowly and continuously.
- Operate machine within the limits of the load chart.
- When moving the machine, ensure that snow or ice along the path and/or on the crawler side frames do not lead to abrupt machine movements.
- Operate the machine in line with all specifications and guidelines contained in the operation manual.

DANGER
Improper use of Liebherr duty cycle crawler cranes, crawler excavators and deep foundation machines at low temperatures!
Structural breakdown, load breakaway, damage to machine.

▶ Observe the manufacturer's guidelines and specifications.

2.15.1 Operation of the machine down to -20 °C (-4 °F) (standard)

Admissible ambient temperatures			
Operation:	down to -20 °C (-4 °F)	**Storage:**	down to -40 °C (-40 °F)

Tab. 346: Admissible ambient temperatures for operation and storage

Measures:
- Note and observe all generally admissible prerequisites and requirements.

LWN/LR.x/V03.01//Auslieferung/2015-06-03/en

2.15.2 Operation of the machine down to -25 °C (-13 °F)*

Admissible ambient temperatures			
Operation:	down to -25 °C (-13 °F)	**Storage:**	down to -40 °C (-40 °F)

Tab. 347: Admissible ambient temperatures for operation and storage

Measures (in addition to all other topics addressed beforehand):
– Install low temperature package (engine pre-heating, auxiliary heating (water)) and external power supply.

Additional prerequisites for start-up:
– Cabin with electronic modules and displays is pre-heated prior to start-up using the provided equipment (low temperature package).
– Diesel engine and power units are pre-heated prior to start-up using the provided equipment (low temperature package).

2.15.3 Operation of the machine down to -40 °C (-40 °F)*

Admissible ambient temperatures			
Operation:	down to -40 °C (-40 °F)	**Storage:**	down to -40 °C (-40 °F)

Tab. 348: Admissible ambient temperatures for operation and storage

Measures (in addition to all other topics addressed beforehand):
– Exchange hydraulic oil, gearbox oil, fuels and lubricants.
– Exchange hydraulic cylinders and hydraulic accumulators.
– Install low-temperature package (engine pre-heating), improved insulation (e.g. of the fuel system), auxiliary heating (water) battery pre-heater, fuel pre-filter heater, oil pre-heating unit and external power supply.
– Exchange attachment parts (in part).
– Exchange undercarriage components (cam rollers, carrier rollers, idler wheel).
– Exchange electric/electronic components (e.g. battery).
– Exchange gearbox (in part).
– Exchange rubber elements and plastic elements (e.g. v-belts, radiator fans).
– Perform changes to the steel structure and load-bearing parts so that all used parts in the load chain meet the necessary requirements as well as use of special welding additives.
– Ensure that pins, screws and ropes including end fittings correspond to ambient temperatures.

Additional prerequisites for start-up:
– Start diesel engine at least 20 minutes prior to starting work.

2.16 Hand signals

The hand signals:
– serve to communicate during visual contact between the machine operator and the signalman or additional personnel
– are clearly defined in national and international standards

LWN/LR.x/V03.01//Auslieferung/2015-06-03/en

copyright by LIEBHERR

Note

▶ The hand signals to be used must be coordinated with all persons involved.

The following overview includes:
– the hand signals in accordance with BGV A8 (Germany)
– the hand signals in accordance with ASME/ANSI B30.5 (United States of America)

2.16.1 General hand signals in accordance with BGV A8

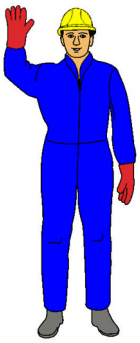

Attention, start, stop

– Extend right arm upward
– Palm faces forward

Stop, pause

– Extend both arms horizontally at your side
– Palms face forward

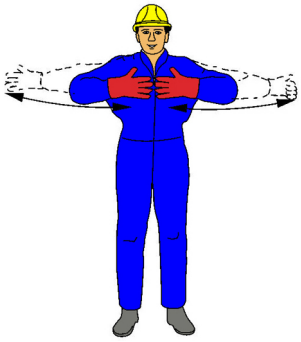

Stop - danger

– First extend both arms horizontally at your side
– Palms face forward
– Now angle and extend both arms alternately

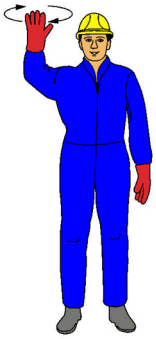

Hoist

– Angle right arm upwards
– Palm faces forward
– Make slow circular motions with hand

LWN/LR.x/V03.01//Auslieferung/2015-06-03/en

copyright by LIEBHERR

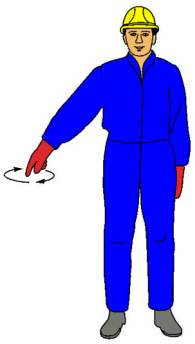

Lower

– Extend right arm downward
– Palm faces inward
– Make slow circular motions with hand

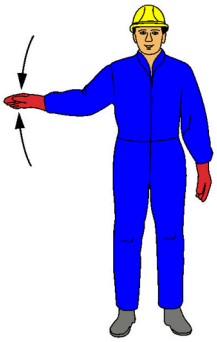

Slow

– Extend right arm horizontally
– Palm faces down
– Slowly move hand up and down

Travel

– Angle right arm upwards
– Palm faces forward
– Move arm back and forth at your side

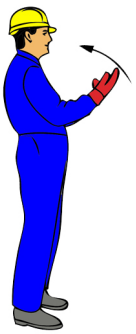

Approach

– Bend both arms
– Palms face inward
– Wave towards you with forearms

Leave

– Bend both arms
– Palms face outward
– Wave away from you with forearms

LWN/LR.x/V03.01//Auslieferung/2015-06-03/en

copyright by
LIEBHERR

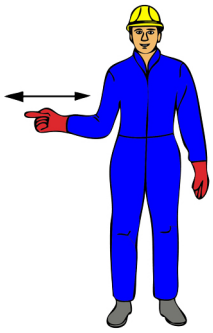

Travel to right (from the point of view of the signalman)

– Slightly angle right arm in horizontal position
– Move arm back and forth at your side

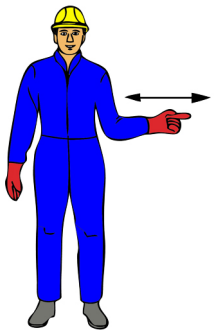

Travel to left (from the point of view of the signalman)

– Slightly angle left arm in horizontal position
– Move arm back and forth at your side

Reduce distance

– Keep both palms parallel and bring together corresponding to the distance

2.16.2 Special hand signals for sling gear application

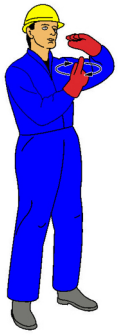

Raise load slowly

– Angle right arm upwards
– Extended finger points upwards
– Right hand makes small circular motions
– Extend left hand and hold over right hand

LWN/LR.x/V03.01//Auslieferung/2015-06-03/en

copyright by
LIEBHERR

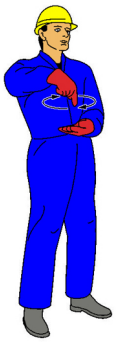

Lower load slowly

– Keep right arm downward
– Extended finger points downwards
– Right hand makes small circular motions
– Place left hand under right hand

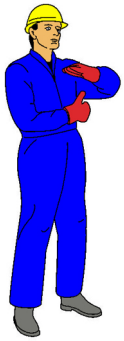

Lift main boom

– Angle right arm upwards
– Extended thumb points upwards
– Extend left hand and hold over right hand

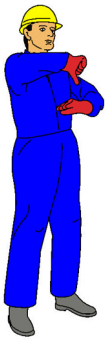

Lower main boom

– Angle right arm
– Extended thumb points down
– Extend left hand and hold underneath right hand

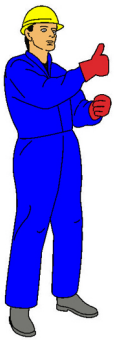

Raise main boom and hold load

– Angle right arm upwards
– Extended thumb points upwards
– Make a fist with left hand and hold underneath right hand

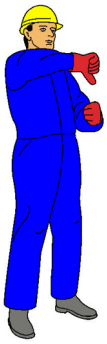

Lower main boom and maintain load

– Angle right arm
– Extended thumb points down
– Make a fist with left hand and hold underneath right hand

LWN/LR.x/V03.01//Auslieferung/2015-06-03/en

copyright by
LIEBHERR

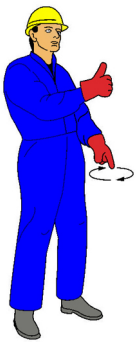

Raise main boom and lower load

- Angle right arm upwards
- Extended thumb points upwards
- Extend left arm, index finger points downward
- Make circular motions with left hand and hold underneath right hand

Lower main boom and lift load

- Angle right arm
- Extended thumb points down
- Angle left arm, index finger points upward
- Make circular motions with left hand and hold underneath right hand

Slew uppercarriage to the right

- Angle left arm and hold up
- Extended thumb points upward in slewing direction
- Extend right arm downward
- Index finger points down and makes circular motions

Slew uppercarriage to the left

- Angle right arm and hold up
- Extended thumb points upward in slewing direction
- Extend left arm downward
- Index finger points down and makes circular motions

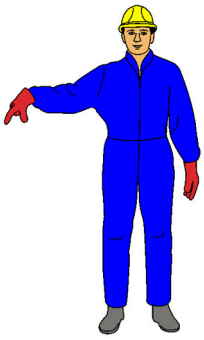

Open grab

- Extend right arm horizontally
- Open hand downward

LWN/LR.x/V03.01//Auslieferung/2015-06-03/en

copyright by
LIEBHERR

Close grab

– Extend right arm horizontally
– Make a fist

2.16.3 Hand signals for lifting gear application in accordance with ASME/ANSI B30.5

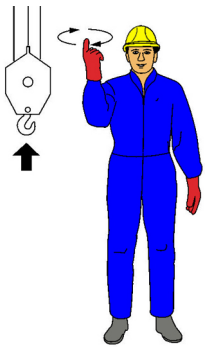

Lift load

– Angle right arm upwards
– Extended index finger points upwards
– Make slow circular motions with hand

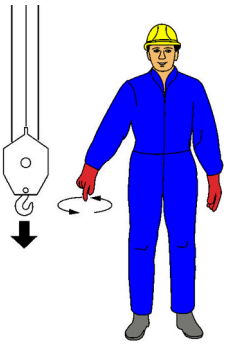

Lower load

– Extend right arm downward
– Extended index finger points down
– Make slow circular motions with hand

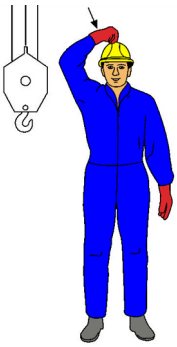

Use of main winch

– Knock with fist on hardhat
– Then give more hand signals

LWN/LR.x/V03.01//Auslieferung/2015-06-03/en

copyright by
LIEBHERR

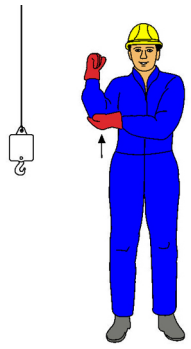

Use of auxiliary winch

- Angle right arm upwards
- Knock on your right elbow from below with left hand
- Then give more hand signals

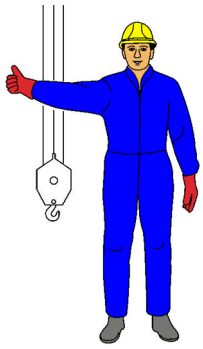

Lift main boom

- Extend right arm horizontally
- Extended thumb points upwards

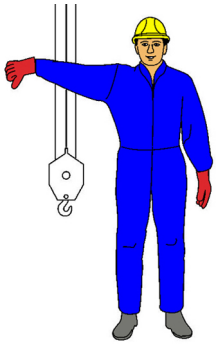

Lower main boom

- Extend right arm horizontally
- Extended thumb points down

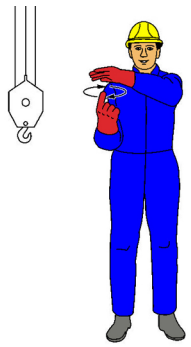

Moving slowly

- Use one hand to give required hand signal. (E.g. lift load)
- Hold one hand over or underneath other hand

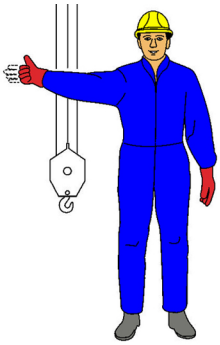

Raise main boom and lower load

- Extend right arm horizontally
- Extended thumb points upwards
- Extend/angle the other fingers alternately as long as the load is supposed to be lowered

LWN/LR.x/V03.01//Auslieferung/2015-06-03/en

copyright by
LIEBHERR

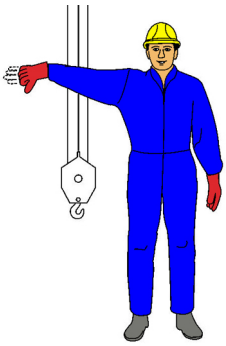

Lower main boom and lift load

– Extend right arm horizontally
– Extended thumb points down
– Extend/angle the other fingers alternately as long as the load is supposed to be lifted

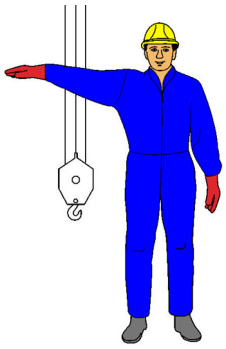

Rotate

– Extend right arm horizontally
– Palm faces down
– Extended finger points in rotation direction

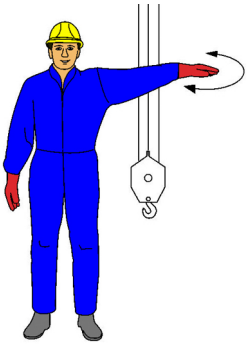

Stop

– Extend one arm horizontally
– Palm faces down
– Move arm back and forth horizontally

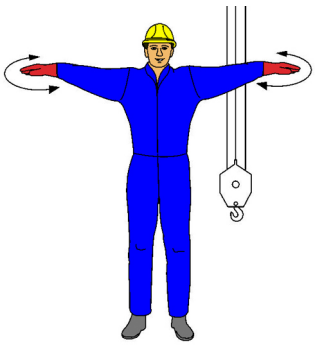

Emergency stop

– Extend both arms horizontally
– Palms face down
– Swing both arms back and forth horizontally

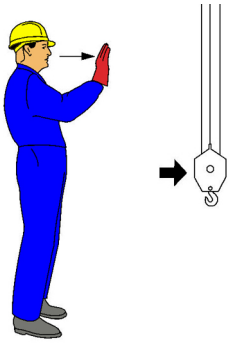

Travel

– Angle one arm
– Palm faces forward
– Make a motion in the direction of travel with one open hand

LWN/LR.x/V03.01//Auslieferung/2015-06-03/en

copyright by
LIEBHERR

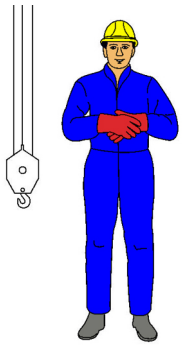

Park and secure machine

– Hook hands in front of your body

Traveling with both crawler chains

– Hold both fists in front of your body
– Indicate travel direction with circular motions

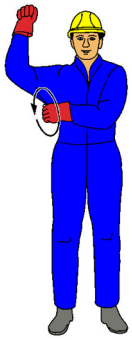

Traveling with one crawler chain

– Angle arm, keep fist raised on the side of the stationary crawler chain
– Angle other arm in front of body on the side of the crawler chain to be moved
– Indicate travel direction making circular motions with fist

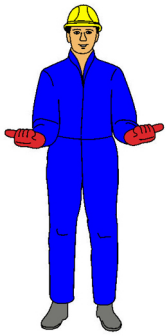

Telescope boom out

– Hold both fists in front of body
– Thumbs face outward

Telescope boom in

– Hold both fists in front of body
– Thumbs point towards each other

LWN/LR.x/V03.01//Auslieferung/2015-06-03/en

copyright by
LIEBHERR

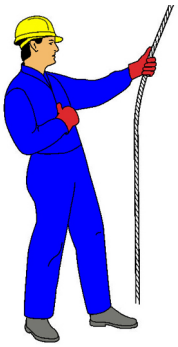

Telescope boom in (single hand signal)

– Hold one fist in front of chest
– Thumb points toward chest

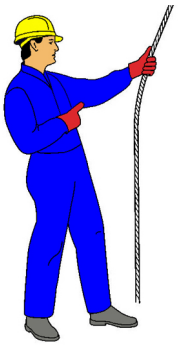

Telescope boom out (single hand signal)

– Hold one fist in front of chest
– Thumbs point outward

LWN/LR.x/V03.01//Auslieferung/2015-06-03/en

copyright by
LIEBHERR

LWN/LR.x/V03.01//Auslieferung/2015-06-03/en

copyright by
LIEBHERR

Control and operating elements 3

3 Control and operating elements

3 Control and operating elements

The chapter **Control and operating elements** deals with the following issues:
– Alignment of control and operating elements
– Names of control and operating elements

3.1 Operating elements on the undercarriage

3.1.1 Operating elements at undercarriage with fixed track width

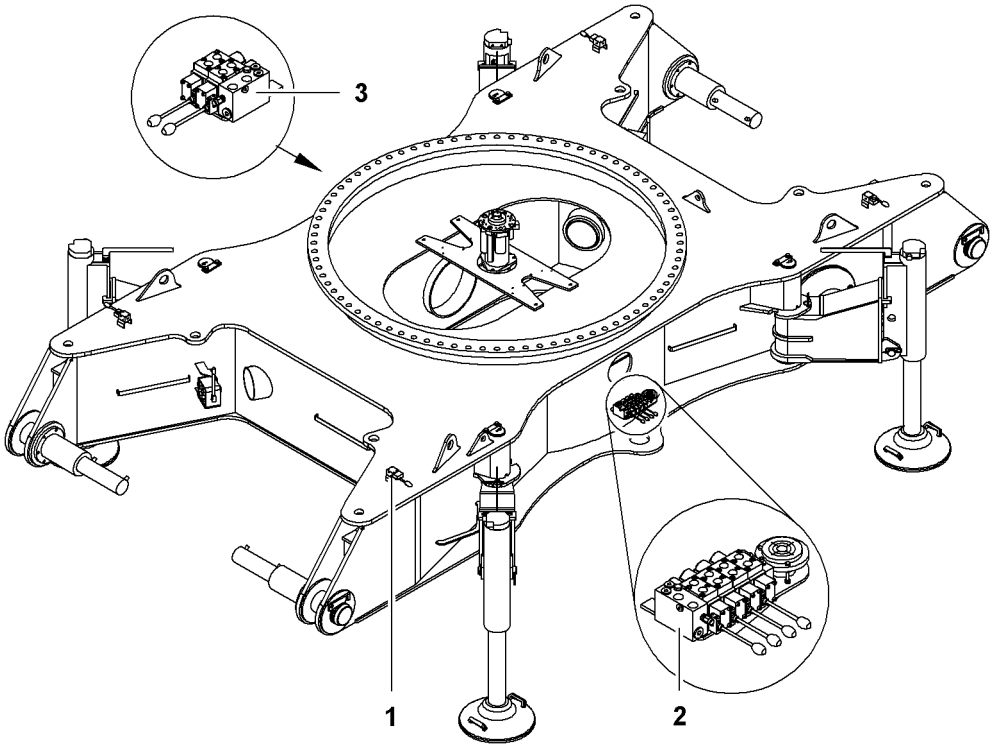

Fig. 791: Operating elements at undercarriage with fixed track width

1 Control lever (4x) for crawler side frame-pin connection cylinder
2 Control lever (4x) for jack with tilt display
3 Control lever (2x) for jack (optional)

LWN/LR.x/V03.01//Auslieferung/2015-06-03/en

copyright by LIEBHERR

3.1.2 Operating elements at undercarriage* with adjustable track width

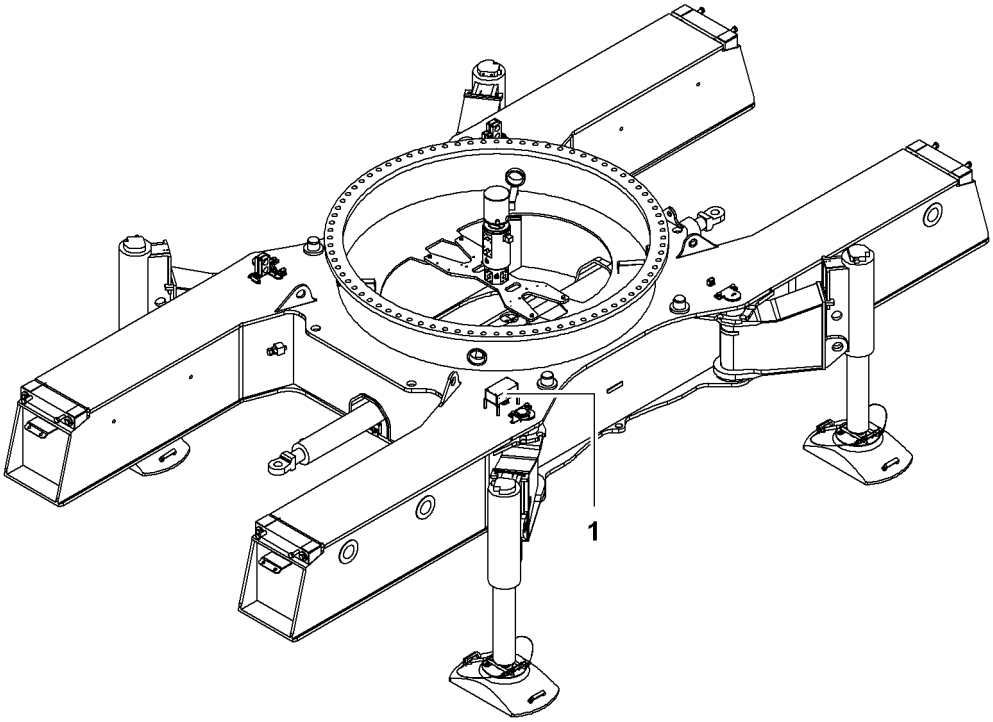

Fig. 792: Operating elements at undercarriage with adjustable track width*

1 Connection plug of cable remote control

LWN/LR.x/V03.01//Auslieferung/2015-06-03/en

copyright by LIEBHERR

3.2 Operating elements on the uppercarriage

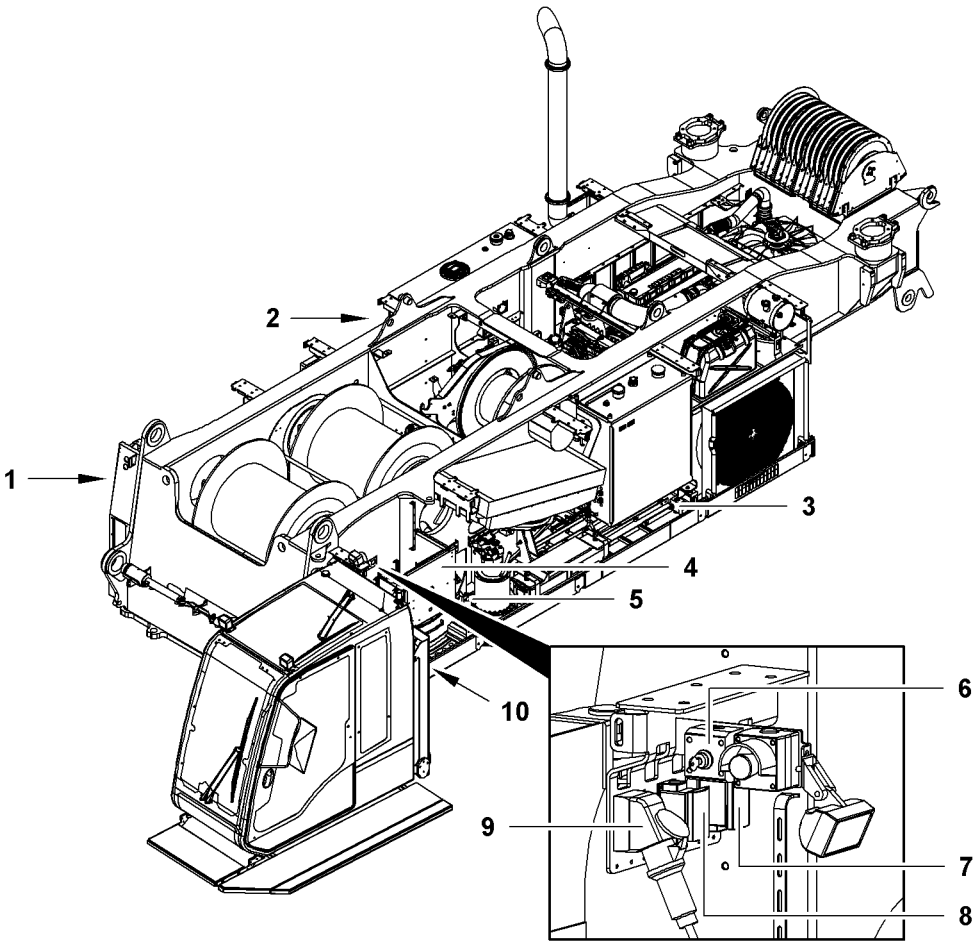

Fig. 793: Operating elements on the uppercarriage

1	Connection plug of cable remote control	**6**	Key switch *load moment limiter shut-down*
2	Refueling pump control panel	**7**	Control panel emergency control system connection plug
3	Connection plug of cable remote control	**8**	Control panel emergency control system connection plug
4	Gate valve *free-fall operation*	**9**	External supply connection plug
5	Main battery switch	**10**	Cable remote control oddments tray and control panel emergency control system

The *load moment limiter shut down* key switch **6** has no effect on machines with an ANSI load chart.

LWN/LR.x/V03.01//Auslieferung/2015-06-03/en

copyright by
LIEBHERR

3.3 Operating elements on counterweight carriage*

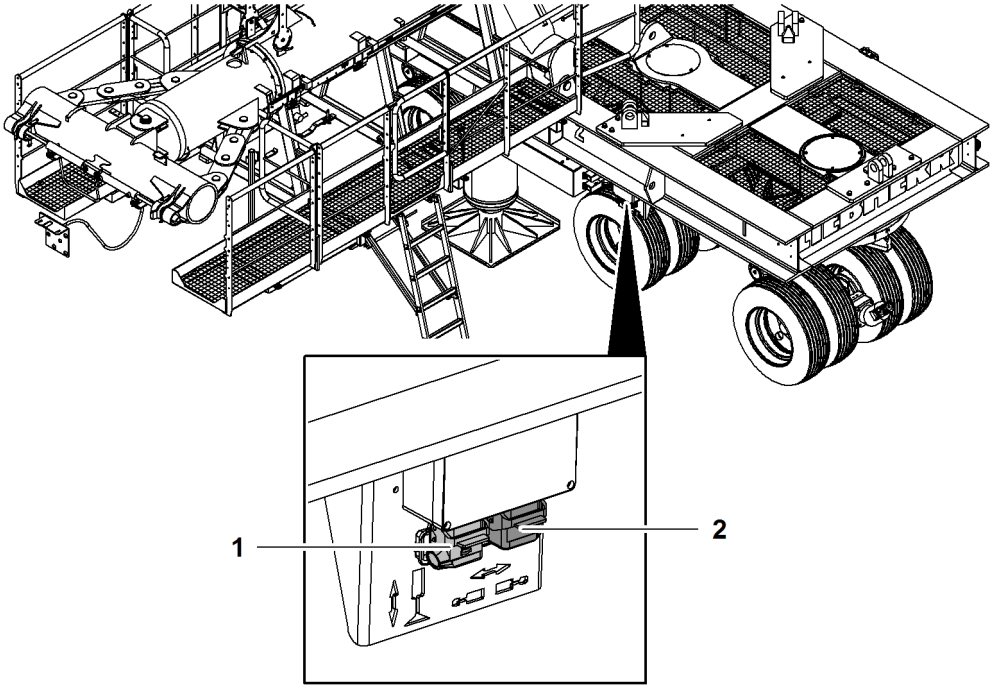

Fig. 794: Operating elements on counterweight carriage

1 Plug for jack

2 Plug for pin connection cylinder

LWN/LR.x/V03.01//Auslieferung/2015-06-03/en

copyright by
LIEBHERR

3.4 Cabin

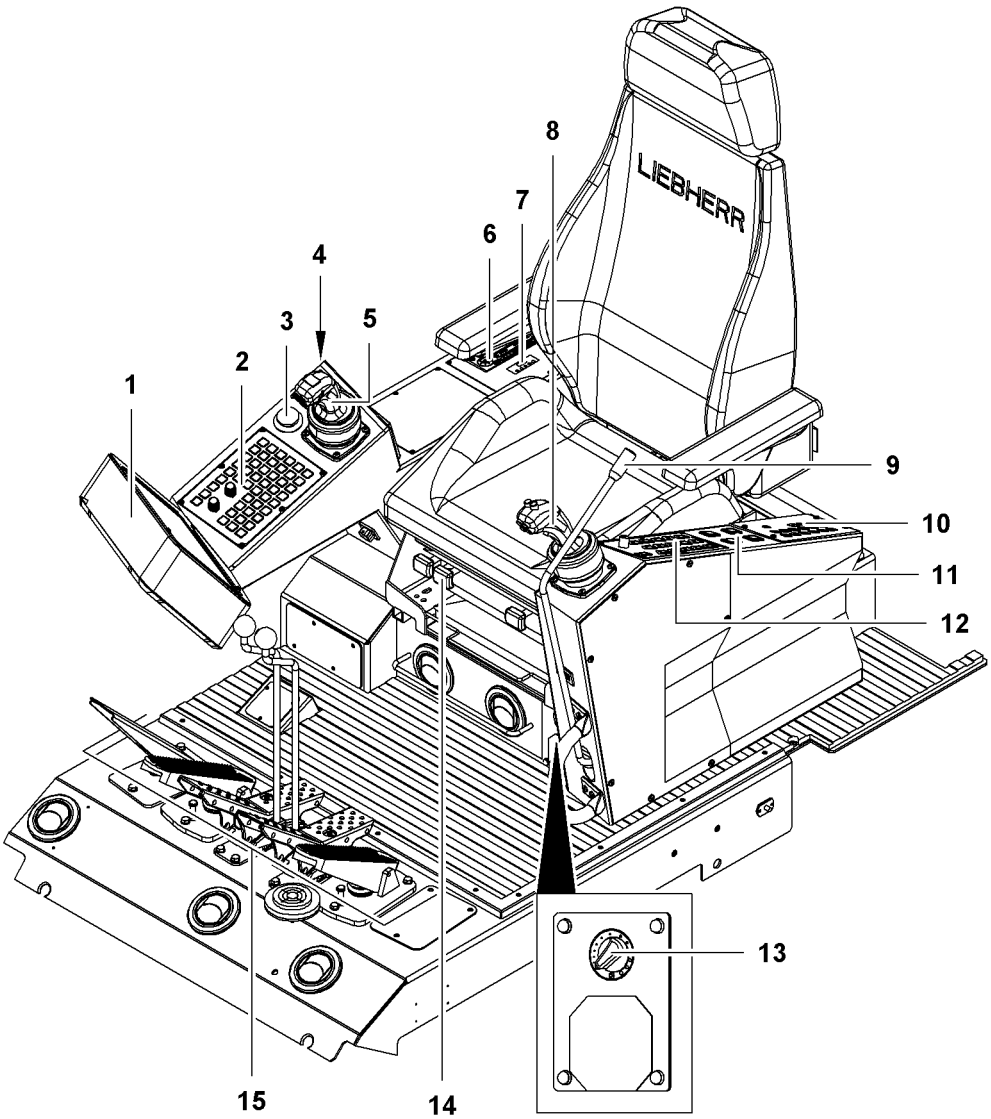

Fig. 795: Cabin

1	Monitor	**9**	Safety lever
2	Control panel *X23*	**10**	Control panel *X12*
3	Emergency stop	**11**	Buttons *Additional floodlights*
4	Ignition key/ignition lock	**12**	Control panel *X11*
5	Multi-directional control lever or right double T-lever	**13**	Switch*Recirculated air/fresh air*
6	Radio	**14**	Lever *operator's seat adjustment* (3x)
7	Operating element *auxiliary heating*	**15**	Foot pedals and hand levers
8	Left multi-directional control lever		

LWN/LR.x/V03.01//Auslieferung/2015-06-03/en

copyright by
LIEBHERR

3.5 Left control lever

3.5.1 Function assignment of the left control lever on machine without derrick equipment*

Left multi-directional control lever

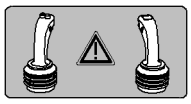

Assigned functions of control levers on a machine with two multi-directional control levers.

Function assignment of buttons on left multi-directional control lever

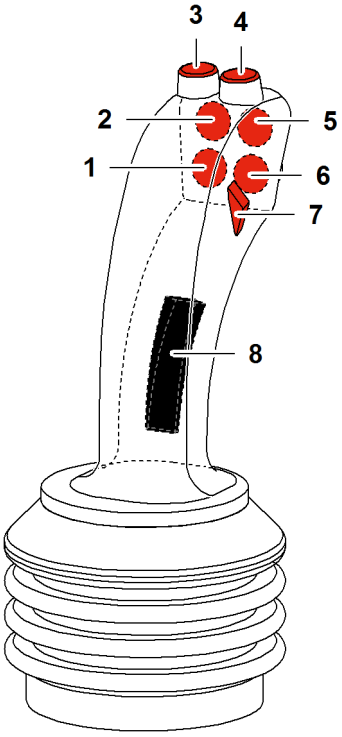

Fig. 797: Function assignment of buttons on left multi-directional control lever

Button	Mode	Preselection or additional button	Name and function
1	Crane mode		[not used]
	Assembly functions		[not used]

LWN/LR.x/V03.01//Auslieferung/2015-06-03/en

copyright by LIEBHERR

Button	Mode	Preselection or additional button	Name and function
2	Crane mode		**Tagline winch free-wheel** Activate/deactivate tagline winch free-wheel.
	Assembly functions		**Tagline winch free-wheel** Activate/deactivate tagline winch free-wheel.
3	Crane mode		**Horn** Sound horn.
	Assembly functions		**Horn** Sound horn.
4	Crane mode		[not used]
	Assembly functions		[not used]
5	Crane mode		**Maximum pull force tagline winch** Select maximum pull force of tagline winch.
	Assembly functions		**Maximum pull force tagline winch** Select maximum pull force of tagline winch.
6	Crane mode		**Swing free-wheel** Activate/deactivate swing free-wheel.
	Assembly functions		**Swing free-wheel** Activate/deactivate swing free-wheel.

LWN/LR.x/V03.01//Auslieferung/2015-06-03/en

copyright by LIEBHERR

Button	Mode	Preselection or additional button	Name and function
7	Crane mode		**Constant tension tagline winch** Set constant tension of tagline winch.
	Assembly functions		**Constant tension tagline winch** Set constant tension of tagline winch.
8	Crane mode		[not used]
	Assembly functions		[not used]

Tab. 349: Function assignment of buttons on left multi-directional control lever

Assigned functions for movement directions on left-hand multi-directional joystick

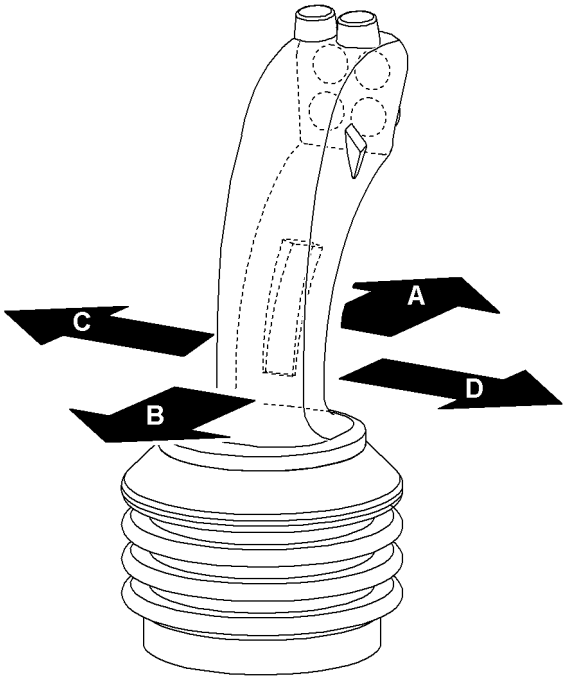

Fig. 814: Function assignment for movement directions on left multi-directional control lever

LWN/LR.x/V03.01//Auslieferung/2015-06-03/en

Direction of movement	Mode	Preselection or additional button	Function
A	Crane mode		Lower winch2
	Assembly functions		Lower winch2
	Assembly functions	Assembly cylinder	Extend assembly cylinder
B	Crane mode		Lift winch2
	Assembly functions		Lift winch2
	Assembly functions	Assembly cylinder	Retract assembly cylinder
C	Crane mode		Swing uppercarriage to the left
	Assembly functions		Swing uppercarriage to the left
	Assembly functions	Jib luffing winch **or** 5	Lower jib

LWN/LR.x/V03.01//Auslieferung/2015-06-03/en

copyright by
LIEBHERR

Direction of movement	Mode	Preselection or additional button	Function
D	Crane mode		Swing uppercarriage to the right
	Assembly functions		Swing uppercarriage to the right
	Assembly functions	Jib luffing winch **or** 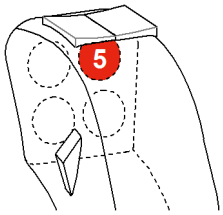	Lift jib

Tab. 350: Function assignment for movement directions on left multi-directional control lever

Left multi-directional control lever

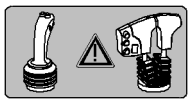

Assigned functions of the control levers on a machine with a multi-directional control lever and a double T-lever.

LWN/LR.x/V03.01/Auslieferung/2015-06-03/en

Assigned functions for buttons on left-hand multi-directional joystick

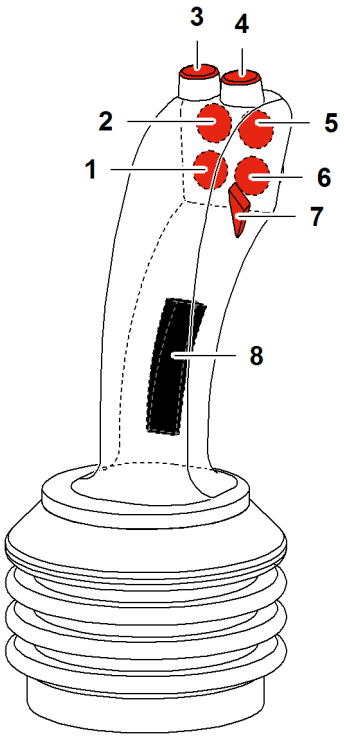

Fig. 834: Function assignment of buttons on left multi-directional control lever

Button	Mode	Preselection or additional button	Name and function
1	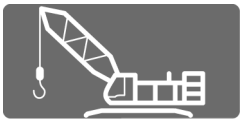 Crane mode		[not used]
	Assembly functions		[not used]
2	Crane mode		**Tagline winch free-wheel** Activate/deactivate tagline winch free-wheel.
	Assembly functions		**Tagline winch free-wheel** Activate/deactivate tagline winch free-wheel.

LWN/LR.x/V03.01//Auslieferung/2015-06-03/en

copyright by
LIEBHERR

Button	Mode	Preselection or additional button	Name and function
3	Crane mode		**Horn** Sound horn.
	Assembly functions		**Horn** Sound horn.
4	Crane mode		[not used]
	Assembly functions		[not used]
5	Crane mode		**Maximum pull force tagline winch** Select maximum pull force of tagline winch.
	Assembly functions		**Maximum pull force tagline winch** Select maximum pull force of tagline winch.
6	Crane mode		**Swing free-wheel** Activate/deactivate swing free-wheel.
	Assembly functions		**Swing free-wheel** Activate/deactivate swing free-wheel.
7	Crane mode		**Constant tension tagline winch** Set constant tension of tagline winch.
	Assembly functions		**Constant tension tagline winch** Set constant tension of tagline winch.

LWN/LR.x/V03.01//Auslieferung/2015-06-03/en

copyright by LIEBHERR

Button	Mode	Preselection or additional button	Name and function
8	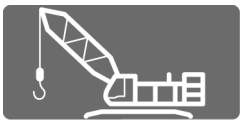 Crane mode		[not used]
	Assembly functions		[not used]

Tab. 351: Function assignment of buttons on left multi-directional control lever

Assigned functions for movement directions on left-hand multi-directional joystick

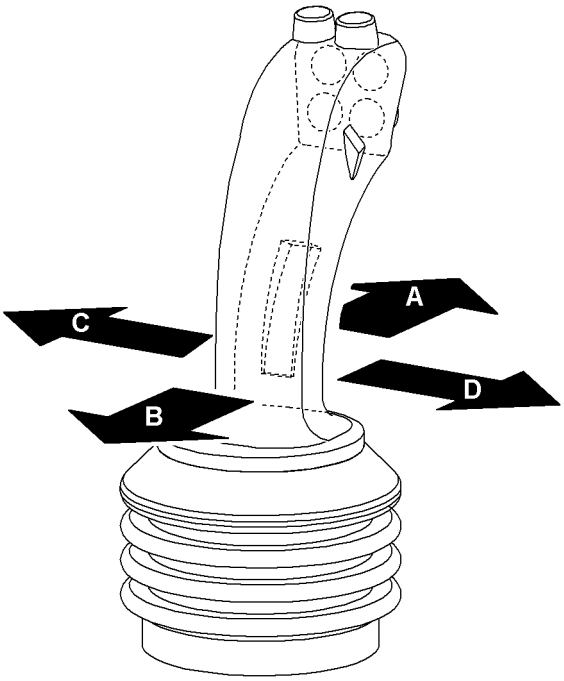

Fig. 851: Function assignment for movement directions on left multi-directional control lever

Direction of movement	Mode	Preselection or additional button	Function
A	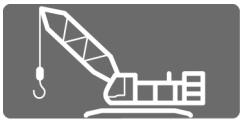 Crane mode		Lower main boom
	Assembly functions		Lower main boom

LWN/LR.x/V03.01//Auslieferung/2015-06-03/en

copyright by
LIEBHERR

Direction of movement	Mode	Preselection or additional button	Function
B	Crane mode		Lift main boom
	Assembly functions		Lift main boom
C	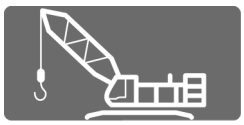 Crane mode		Swing uppercarriage to the left
	Assembly functions		Swing uppercarriage to the left
D	Crane mode		Swing uppercarriage to the right
	Assembly functions		Swing uppercarriage to the right

Tab. 352: Function assignment for movement directions on left multi-directional control lever

3.5.2 Function assignment of the left control lever on machine with derrick equipment*

Left multi-directional control lever

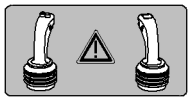

Function assignment of control levers on a machine with two multi-directional control levers

LWN/LR.x/V03.01//Auslieferung/2015-06-03/en

copyright by
LIEBHERR

Function assignment of buttons on left multi-directional control lever

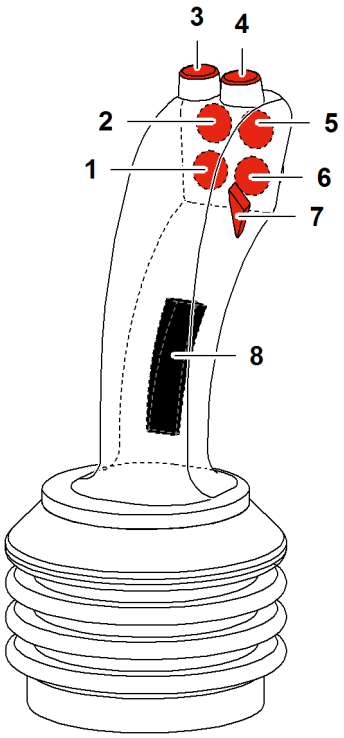

Fig. 861: Function assignment of buttons on left multi-directional control lever

Button	Mode	Preselection or additional button	Name and function
1	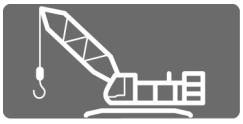 Crane mode		**Derrick hoist cylinder** Activates/deactivates derrick hoist cylinder.
	Assembly functions		**Derrick hoist cylinder** Activates/deactivates derrick hoist cylinder.
2	Crane mode		**Tagline winch free-wheel** Activate/deactivate tagline winch free-wheel.
	Assembly functions		**Tagline winch free-wheel** Activate/deactivate tagline winch free-wheel.

LWN/LR.x/V03.01//Auslieferung/2015-06-03/en

copyright by
LIEBHERR

Button	Mode	Preselection or additional button	Name and function
3	Crane mode		**Horn** Sound horn.
	Assembly functions		**Horn** Sound horn.
4	Crane mode		[not used]
	Assembly functions		[not used]
5	Crane mode		**Maximum pull force tagline winch** Select maximum pull force of tagline winch.
	Assembly functions		**Maximum pull force tagline winch** Select maximum pull force of tagline winch.
6	Crane mode		**Swing free-wheel** Activate/deactivate swing free-wheel.
	Assembly functions		**Swing free-wheel** Activate/deactivate swing free-wheel.
7	Crane mode		**Constant tension tagline winch** Set constant tension of tagline winch.
	Assembly functions		**Constant tension tagline winch** Set constant tension of tagline winch.

LWN/LR.x/V03.01//Auslieferung/2015-06-03/en

copyright by LIEBHERR

Button	Mode	Preselection or additional button	Name and function
8	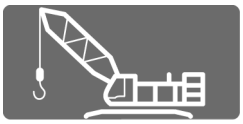 Crane mode		[not used]
	Assembly functions		[not used]

Tab. 353: Function assignment of buttons on left multi-directional control lever

Function assignment for movement directions on left multi-directional control lever

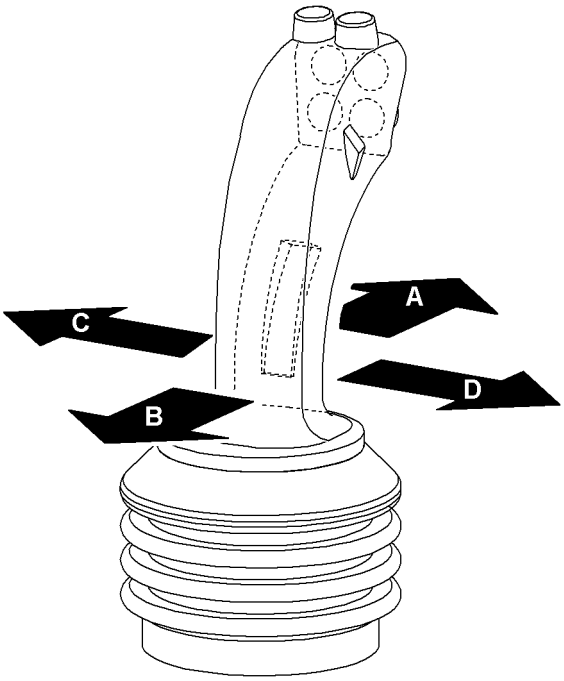

Fig. 878: Function assignment for movement directions on left multi-directional control lever

LWN/LR.x/V03.01//Auslieferung/2015-06-03/en

copyright by
LIEBHERR

Left control lever

Direction of movement	Mode	Preselection or additional button	Function
A	Crane mode		Lower winch2
	Crane mode	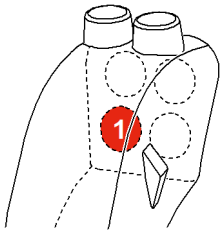	Extend derrick hoist cylinder
	Assembly functions		Lower winch2
	Assembly functions	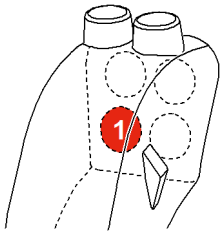	Extend derrick hoist cylinder
	Assembly functions	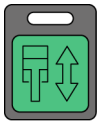 Assembly cylinder	Extend assembly cylinder

LWN/LR.x/V03.01//Auslieferung/2015-06-03/en

copyright by LIEBHERR

Direction of movement	Mode	Preselection or additional button	Function
B	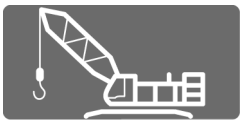 Crane mode		Lift winch2
	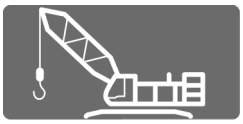 Crane mode	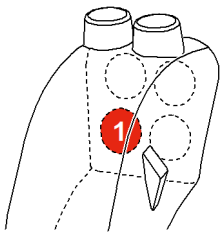	Retract derrick hoist cylinder
	Assembly functions		Lift winch2
	Assembly functions	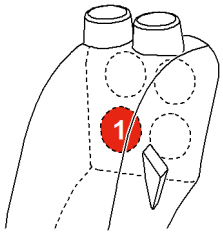	Retract derrick hoist cylinder
	Assembly functions	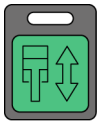 Assembly cylinder	Retract assembly cylinder

LWN/LR.x/V03.01//Auslieferung/2015-06-03/en

copyright by
LIEBHERR

Direction of movement	Mode	Preselection or additional button	Function
C	Crane mode		Swing uppercarriage to the left
	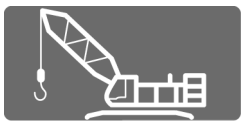 Crane mode	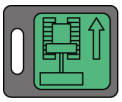 Trailer travel mode	Steer wheel sets of counterweight carriage to the left
	Assembly functions		Swing uppercarriage to the left
	Assembly functions	Derrick winch	Lower main boom A)
	Assembly functions	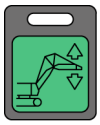 Jib luffing winch **or** 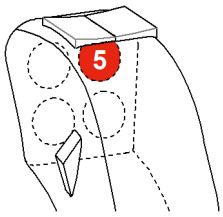	Lower jib

LWN/LR.x/V03.01//Auslieferung/2015-06-03/en

Direction of movement	Mode	Preselection or additional button	Function
D	Crane mode		Swing uppercarriage to the right
	Crane mode	Trailer travel mode	Steer wheel sets of counterweight carriage to the right
	Assembly functions		Swing uppercarriage to the right
	Assembly functions	Derrick winch	Lift main boom A)
	Assembly functions	Jib luffing winch **or** 5	Lift jib

Tab. 354: Function assignment for movement directions on left multi-directional control lever

A) By default, this function is on the left multi-directional control lever. “Jib luffing winch” must be additionally selected to enable this function on the right multi-directional control lever.

Left multi-directional control lever

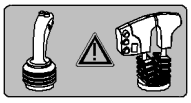

Function assignment of control levers on a machine with a multi-directional control lever and a double T-lever

LWN/LR.x/V03.01//Auslieferung/2015-06-03/en

copyright by LIEBHERR

Function assignment of buttons on left multi-directional control lever

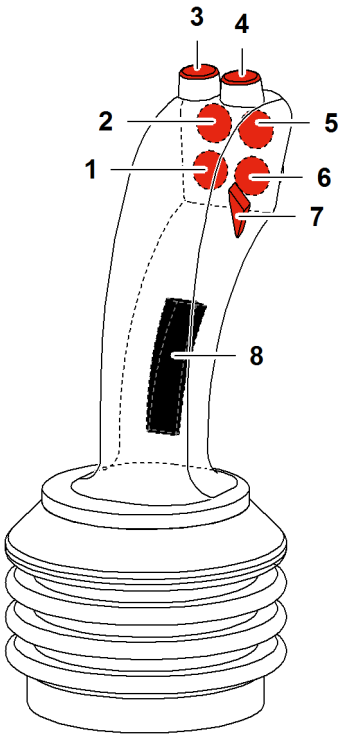

Fig. 914: Function assignment of buttons on left multi-directional control lever

Button	Mode	Preselection or additional button	Name and function
1	Crane mode		**Derrick hoist cylinder** Activates/deactivates derrick hoist cylinder.
	Assembly functions		**Derrick hoist cylinder** Activates/deactivates derrick hoist cylinder.
2	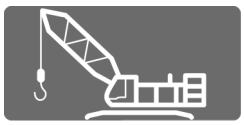 Crane mode		**Tagline winch free-wheel** Activate/deactivate tagline winch free-wheel.
	Assembly functions		**Tagline winch free-wheel** Activate/deactivate tagline winch free-wheel.

LWN/LR.x/V03.01//Auslieferung/2015-06-03/en

copyright by
LIEBHERR

Button	Mode	Preselection or additional button	Name and function
3	Crane mode		**Horn** Sound horn.
	Assembly functions		**Horn** Sound horn.
4	Crane mode		[not used]
	Assembly functions		[not used]
5	Crane mode		**Maximum pull force tagline winch** Select maximum pull force of tagline winch.
	Assembly functions		**Maximum pull force tagline winch** Select maximum pull force of tagline winch.
6	Crane mode		**Swing free-wheel** Activate/deactivate swing free-wheel.
	Assembly functions		**Swing free-wheel** Activate/deactivate swing free-wheel.
7	Crane mode		**Constant tension tagline winch** Set constant tension of tagline winch.
	Assembly functions		**Constant tension tagline winch** Set constant tension of tagline winch.

LWN/LR.x/V03.01//Auslieferung/2015-06-03/en

copyright by
LIEBHERR

Button	Mode	Preselection or additional button	Name and function
8	Crane mode		[not used]
	Assembly functions		[not used]

Tab. 355: Function assignment of buttons on left multi-directional control lever

Function assignment for movement directions on left multi-directional control lever

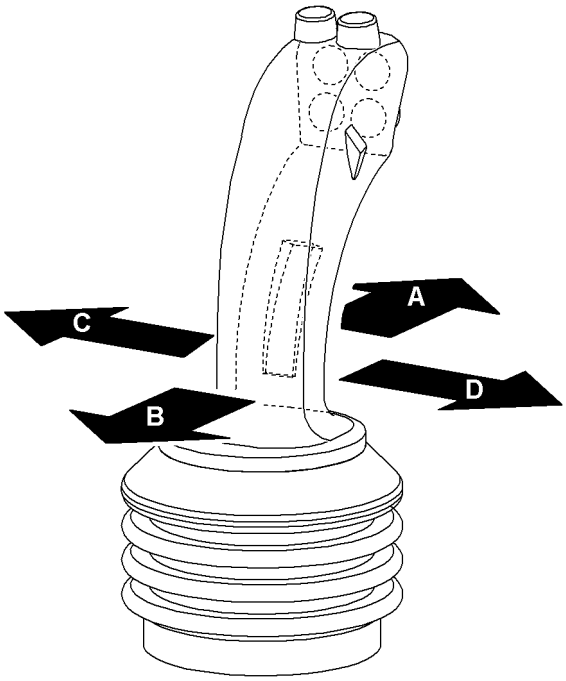

Fig. 931: Function assignment for movement directions on left multi-directional control lever

LWN/LR.x/V03.01//Auslieferung/2015-06-03/en

Direction of movement	Mode	Preselection or additional button	Function
A	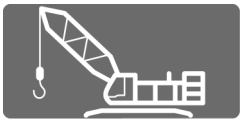 Crane mode	Derrick winch	Lower main boom [A)]
	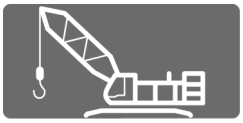 Crane mode	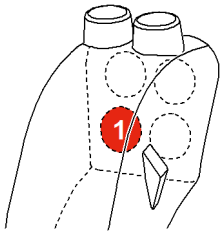	Extend derrick hoist cylinder
	Assembly functions	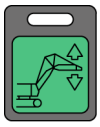 Jib luffing winch **or** 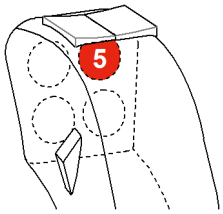	Lower main boom [B)]
	Assembly functions	Extend A-frame1 cylinder **and** 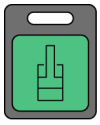 Cylinder adjustment functions	Lower derrick boom
	Assembly functions	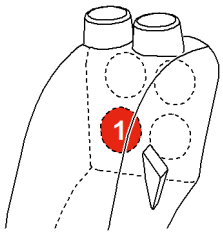	Extend derrick hoist cylinder

LWN/LR.x/V03.01//Auslieferung/2015-06-03/en

copyright by LIEBHERR

Direction of movement	Mode	Preselection or additional button	Function
B	Crane mode	Derrick winch	Lift main boom [A)]
	Crane mode	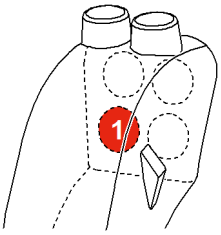	Retract derrick hoist cylinder
	Assembly functions	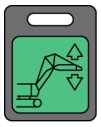 Jib luffing winch **or** 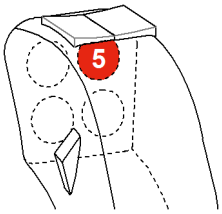	Lift main boom [B)]
	Assembly functions	Extend A-frame1 cylinder **and** 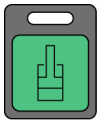 Cylinder adjustment functions	Lift derrick boom
	Assembly functions	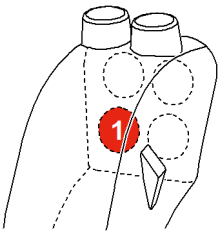	Retract derrick hoist cylinder

LWN/LR.x/V03.01//Auslieferung/2015-06-03/en

copyright by LIEBHERR

Direction of movement	Mode	Preselection or additional button	Function
C	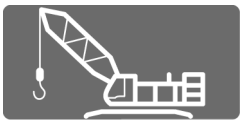 Crane mode		Swing uppercarriage to the left
	Crane mode	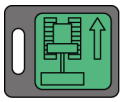 Trailer travel mode	Steer wheel sets of counterweight carriage to the left
	Assembly functions		Swing uppercarriage to the left
D	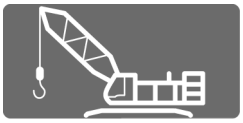 Crane mode		Swing uppercarriage to the right
	Crane mode	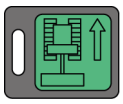 Trailer travel mode	Steer wheel sets of counterweight carriage to the right
	Assembly functions		Swing uppercarriage to the right

Tab. 356: Function assignment for movement directions on left multi-directional control lever

A) In crane mode, “Derrick winch” is automatically activated.
B) By default, this function is on the outer T-lever. “Jib luffing winch” must be additionally selected to enable this function on the left multi-directional control lever.

LWN/LR.x/V03.01//Auslieferung/2015-06-03/en

copyright by
LIEBHERR

3.6 Right control lever

3.6.1 Function assignment of the right control lever on machine without derrick equipment*

Right multi-directional control lever

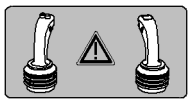

Assigned functions of control levers on a machine with two multi-directional control levers.

Function assignment of buttons on right multi-directional control lever

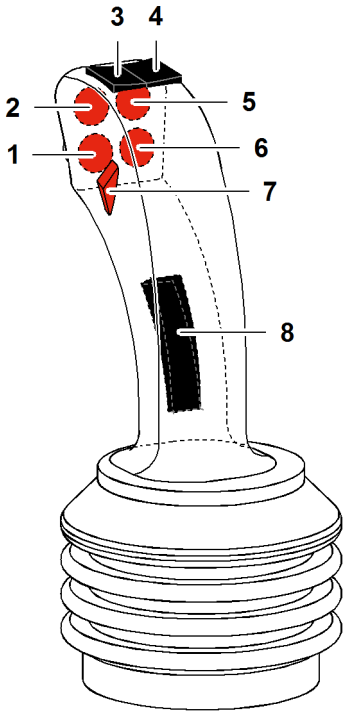

Fig. 965: Function assignment of buttons on right multi-directional control lever

Button	Mode	Preselection or additional button	Name and function
1	Crane mode		[not used]
	Assembly functions		[not used]

LWN/LR.x/V03.01//Auslieferung/2015-06-03/en

copyright by LIEBHERR

Button	Mode	Preselection or additional button	Name and function
2	Crane mode		**Save/delete constant engine RPM** Save current diesel engine RPM as constant engine RPM or delete saved constant engine RPM.
	Assembly functions		**Save/delete constant engine RPM** Save current diesel engine RPM as constant engine RPM or delete saved constant engine RPM.
3	Crane mode		**Increase RPM** Increase diesel engine RPM.
	Assembly functions		**Increase RPM** Increase diesel engine RPM.
4	Crane mode		**Reduce RPM** Decrease diesel engine RPM.
	Assembly functions		**Reduce RPM** Decrease diesel engine RPM.
5	Crane mode		**Jib luffing winch** Activates/deactivates the jib luffing winch.
	Assembly functions		**Jib luffing winch** Activates/deactivates the jib luffing winch.
6	Crane mode		**Winch synchronization** Activates/deactivates winch synchronization.
	Assembly functions		**Winch synchronization** Activates/deactivates winch synchronization.

LWN/LR.x/V03.01//Auslieferung/2015-06-03/en

copyright by LIEBHERR

Button	Mode	Preselection or additional button	Name and function
7	Crane mode		[not used]
	Assembly functions		[not used]
8	Crane mode		[not used]
	Assembly functions		[not used]

Tab. 357: Function assignment of buttons on right multi-directional control lever

Assigned functions for movement directions on right-hand multi-directional joystick

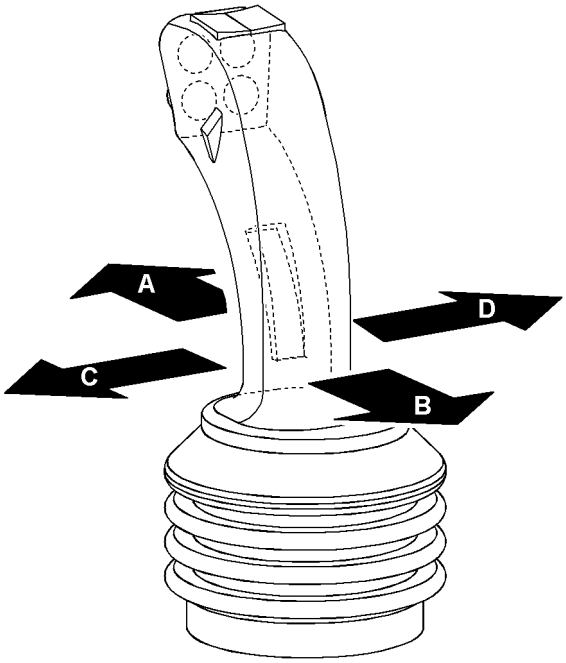

Fig. 982: Function assignment of movement directions on right multi-directional control lever

LWN/LR.x/V03.01//Auslieferung/2015-06-03/en

Direction of movement	Mode	Preselection or additional button	Function
A	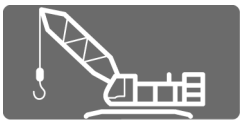 Crane mode		Lower winch1
	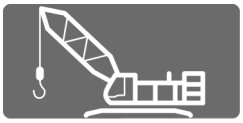 Crane mode	Winch synchronization **or** 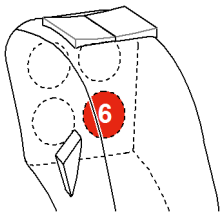	Lower winch1 and winch2
	Assembly functions		Lower winch1
	Assembly functions	Winch synchronization **or** 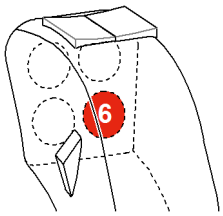	Lower winch1 and winch2

LWN/LR.x/V03.01//Auslieferung/2015-06-03/en

copyright by LIEBHERR

Direction of movement	Mode	Preselection or additional button	Function
B	Crane mode		Lift winch1
	Crane mode	Winch synchronization **or** 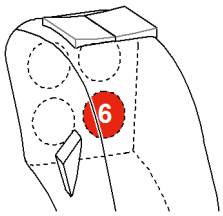	Lift winch1 and winch2
	Assembly functions		Lift winch1
	Assembly functions	Winch synchronization **or** 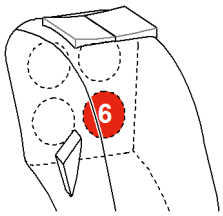	Lift winch1 and winch2

LWN/LR.x/V03.01//Auslieferung/2015-06-03/en

Direction of movement	Mode	Preselection or additional button	Function
C	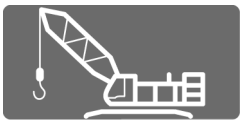 Crane mode		Lift main boom
	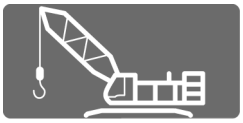 Crane mode	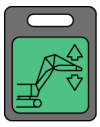 Jib luffing winch **or** 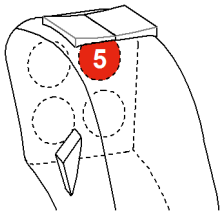	Lift jib
	Assembly functions	Extend A-frame1 cylinder **and** 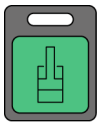 Cylinder adjustment functions	Lift main boom

LWN/LR.x/V03.01//Auslieferung/2015-06-03/en

copyright by LIEBHERR

Direction of movement	Mode	Preselection or additional button	Function
D	Crane mode		Lower main boom
	Crane mode	Jib luffing winch **or** 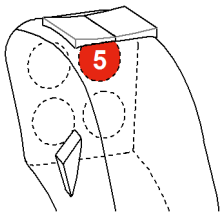	Lower jib
	Assembly functions	Extend A-frame1 cylinder **and** 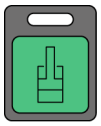 Cylinder adjustment functions	Lower main boom

Tab. 358: Function assignment of movement directions on right multi-directional control lever

Right double T-lever

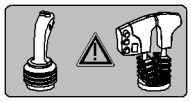

Assigned functions of the control levers on a machine with a multi-directional control lever and a double T-lever.

LWN/LR.x/V03.01//Auslieferung/2015-06-03/en

Function assignment of buttons on right double T-lever

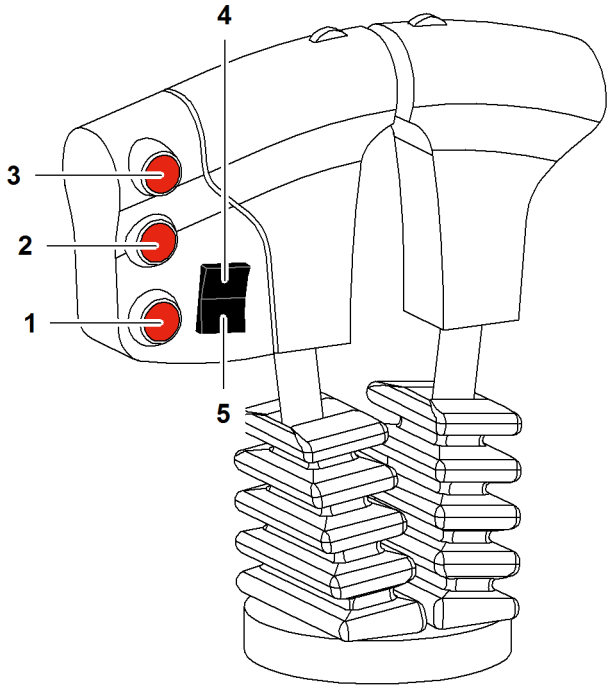

Fig. 1014: Function assignment of buttons on right double T-lever

Button	Mode	Preselection or additional button	Name and function
1	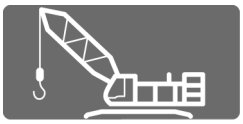 Crane mode		**Save/delete constant engine RPM** Save current diesel engine RPM as constant engine RPM or delete saved constant engine RPM.
	Assembly functions		**Save/delete constant engine RPM** Save current diesel engine RPM as constant engine RPM or delete saved constant engine RPM.
2	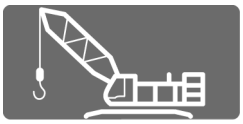 Crane mode		**Winch synchronization** Activates/deactivates winch synchronization.
	Assembly functions		**Winch synchronization** Activates/deactivates winch synchronization.

LWN/LR.x/V03.01//Auslieferung/2015-06-03/en

copyright by LIEBHERR

Button	Mode	Preselection or additional button	Name and function
3	Crane mode		**Jib luffing winch** Activates/deactivates the jib luffing winch.
	Assembly functions		**Jib luffing winch** Activates/deactivates the jib luffing winch.
4	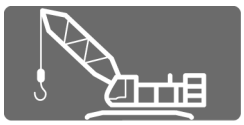 Crane mode		**Increase RPM** Increase diesel engine RPM.
	Assembly functions		**Increase RPM** Increase diesel engine RPM.
5	Crane mode		**Reduce RPM** Decrease diesel engine RPM.
	Assembly functions		**Reduce RPM** Decrease diesel engine RPM.

Tab. 359: Function assignment of buttons on right double T-lever

LWN/LR.x/V03.01//Auslieferung/2015-06-03/en

copyright by LIEBHERR

Assigned functions for movement directions on right-hand double T-lever

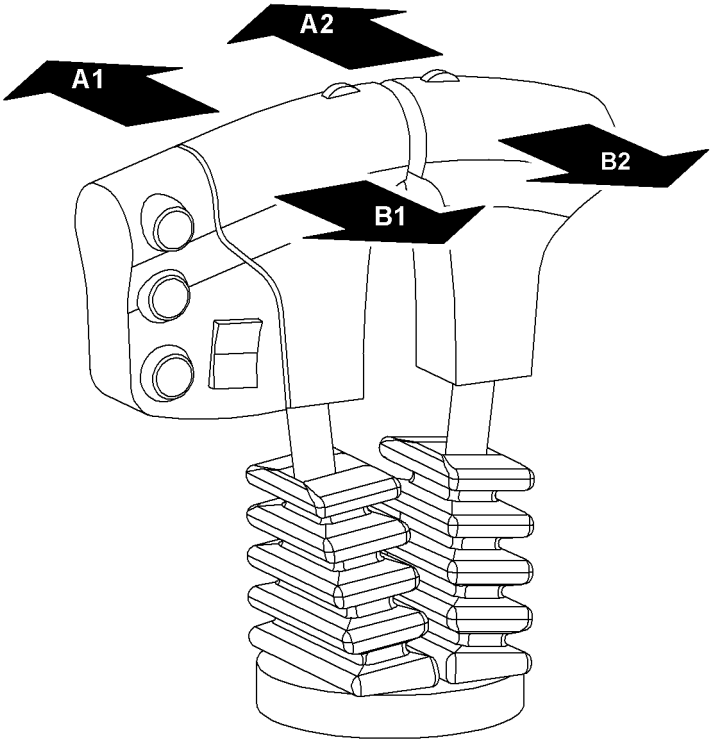

Fig. 1025: Function assignment for movement directions on right double T-lever

LWN/LR.x/V03.01//Auslieferung/2015-06-03/en

copyright by
LIEBHERR

Direction of movement	Mode	Preselection or additional button	Function
A1	Crane mode		Lower winch1
	Crane mode	Winch synchronization **or** 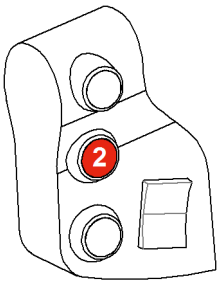	Lower winch1 and winch2
	Assembly functions		Lower winch1
	Assembly functions	Winch synchronization **or** 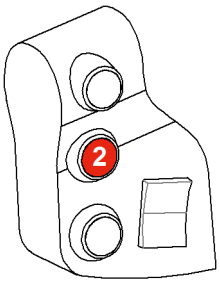	Lower winch1 and winch2

LWN/LR.x/V03.01//Auslieferung/2015-06-03/en

Direction of movement	Mode	Preselection or additional button	Function
A2	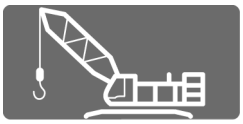 Crane mode		Lower winch2
	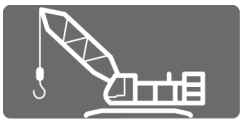 Crane mode	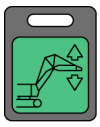 Jib luffing winch **or** 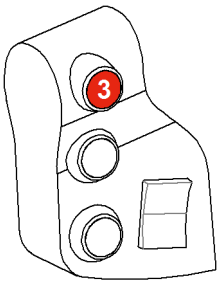	Lower jib
	Assembly functions		Lower winch2
	Assembly functions	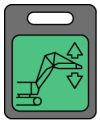 Jib luffing winch **or** 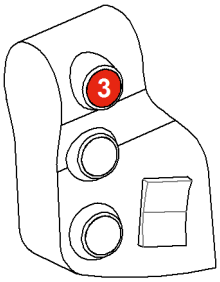	Lower jib
	Assembly functions	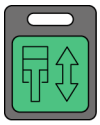 Assembly cylinder	Extend assembly cylinder

LWN/LR.x/V03.01//Auslieferung/2015-06-03/en

copyright by LIEBHERR

Direction of movement	Mode	Preselection or additional button	Function
B1	Crane mode		Lift winch1
	Crane mode	Winch synchronization **or** 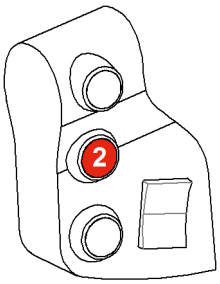	Lift winch1 and winch2
	Assembly functions		Lift winch1
	Assembly functions	Winch synchronization **or** 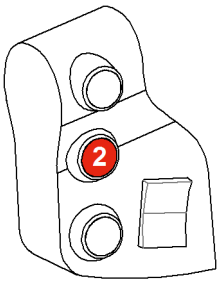	Lift winch1 and winch2

LWN/LR.x/V03.01//Auslieferung/2015-06-03/en

Direction of movement	Mode	Preselection or additional button	Function
B2	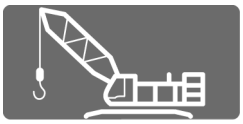 Crane mode		Lift winch2
	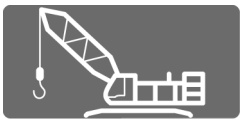 Crane mode	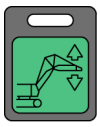 Jib luffing winch **or** 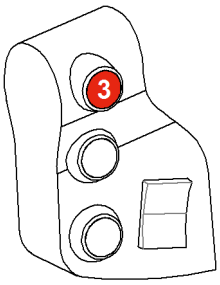	Lift jib
	Assembly functions		Lift winch2
	Assembly functions	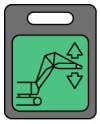 Jib luffing winch **or** 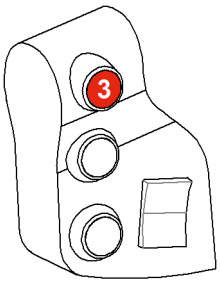	Lift jib
	Assembly functions	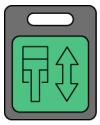 Assembly cylinder	Retract assembly cylinder

Tab. 360: Function assignment for movement directions on right double T-lever

LWN/LR.x/V03.01//Auslieferung/2015-06-03/en

copyright by LIEBHERR

3.6.2 Function assignment of the right control lever on machine with derrick equipment*

Right multi-directional control lever

Function assignment of control levers on a machine with two multi-directional control levers

Function assignment of buttons on right multi-directional control lever

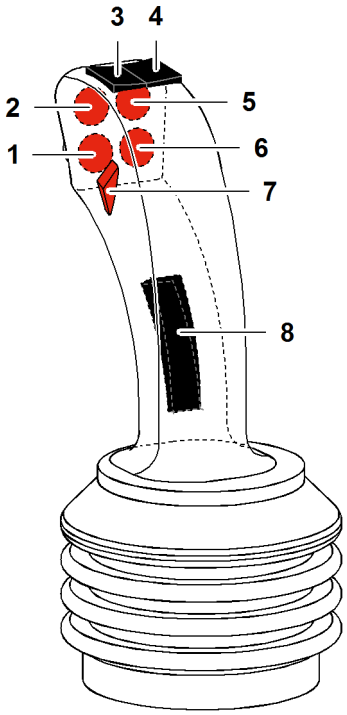

Fig. 1063: Function assignment of buttons on right multi-directional control lever

Button	Mode	Preselection or additional button	Name and function
1	Crane mode		[not used]
	Assembly functions		[not used]

LWN/LR.x/V03.01//Auslieferung/2015-06-03/en

Button	Mode	Preselection or additional button	Name and function
2	Crane mode		**Save/delete constant engine RPM** Save current diesel engine RPM as constant engine RPM or delete saved constant engine RPM.
	Assembly functions		**Save/delete constant engine RPM** Save current diesel engine RPM as constant engine RPM or delete saved constant engine RPM.
3	Crane mode		**Increase RPM** Increase diesel engine RPM.
	Assembly functions		**Increase RPM** Increase diesel engine RPM.
4	Crane mode		**Reduce RPM** Decrease diesel engine RPM.
	Assembly functions		**Reduce RPM** Decrease diesel engine RPM.
5	Crane mode		**Jib luffing winch** Activates/deactivates the jib luffing winch.
	Assembly functions		**Jib luffing winch** Activates/deactivates the jib luffing winch.
6	Crane mode		**Winch synchronization** Activates/deactivates winch synchronization.
	Assembly functions		**Winch synchronization** Activates/deactivates winch synchronization.

LWN/LR.x/V03.01//Auslieferung/2015-06-03/en

copyright by LIEBHERR

Button	Mode	Preselection or additional button	Name and function
7	Crane mode		[not used]
	Assembly functions		[not used]
8	Crane mode		[not used]
	Assembly functions		[not used]

Tab. 361: Function assignment of buttons on right multi-directional control lever

Function assignment of movement directions on right multi-directional control lever

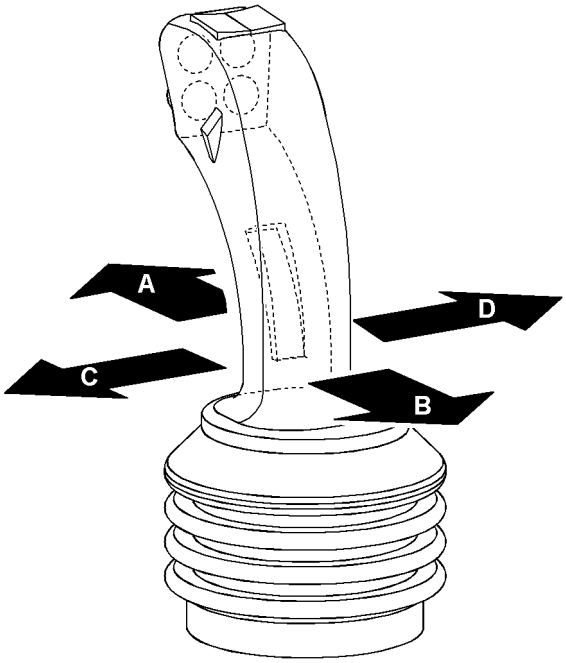

Fig. 1080: Function assignment of movement directions on right multi-directional control lever

LWN/LR.x/V03.01//Auslieferung/2015-06-03/en

copyright by
LIEBHERR

Direction of movement	Mode	Preselection or additional button	Function
A	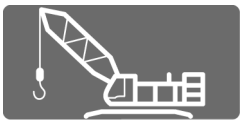 Crane mode		Lower winch1
	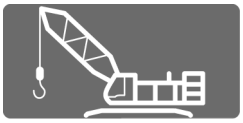 Crane mode	Winch synchronization **or** 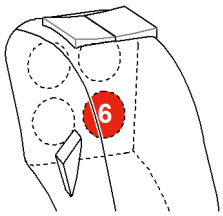	Lower winch1 and winch2
	Assembly functions		Lower winch1
	Assembly functions	Winch synchronization **or** 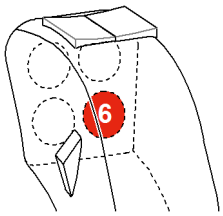	Lower winch1 and winch2

LWN/LR.x/V03.01//Auslieferung/2015-06-03/en

copyright by LIEBHERR

Direction of movement	Mode	Preselection or additional button	Function
B	Crane mode		Lift winch1
	Crane mode	Winch synchronization **or** 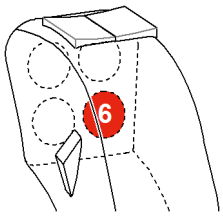	Lift winch1 and winch2
	Assembly functions		Lift winch1
	Assembly functions	Winch synchronization **or** 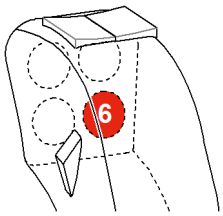	Lift winch1 and winch2

LWN/LR.x/V03.01//Auslieferung/2015-06-03/en

Direction of movement	Mode	Preselection or additional button	Function
C	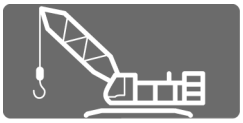 Crane mode	Derrick winch	Lift main boom [A)]
	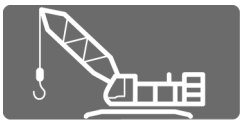 Crane mode	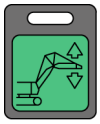 Jib luffing winch **or** 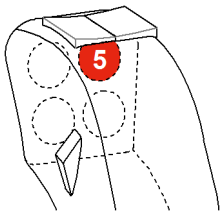	Lift jib
	Assembly functions	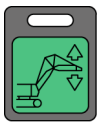 Jib luffing winch **or** 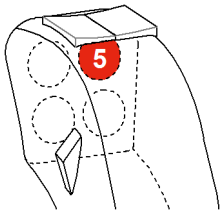	Lift main boom [B)]
	Assembly functions	Extend A-frame1 cylinder **and** 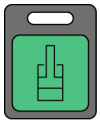 Cylinder adjustment functions	Lift derrick boom

LWN/LR.x/V03.01//Auslieferung/2015-06-03/en

copyright by LIEBHERR

Direction of movement	Mode	Preselection or additional button	Function
D	Crane mode	Derrick winch	Lower main boom [A)]
	Crane mode	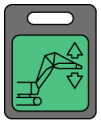 Jib luffing winch **or** 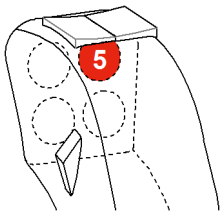	Lower jib
	Assembly functions	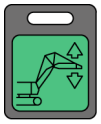 Jib luffing winch **or** 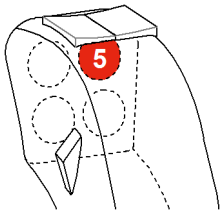	Lower main boom [B)]
	Assembly functions	Extend A-frame1 cylinder **and** 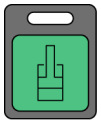 Cylinder adjustment functions	Lower derrick boom

Tab. 362: Function assignment of movement directions on right multi-directional control lever

A) In crane mode, “Derrick winch” is automatically activated.

B) By default, this function is on the left multi-directional control lever. “Jib luffing winch” must be additionally selected to enable this function on the right multi-directional control lever.

LWN/LR.x/V03.01//Auslieferung/2015-06-03/en

copyright by LIEBHERR

Right double T-lever

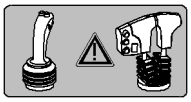

Function assignment of control levers on a machine with a multi-directional control lever and a double T-lever

Function assignment of buttons on right double T-lever

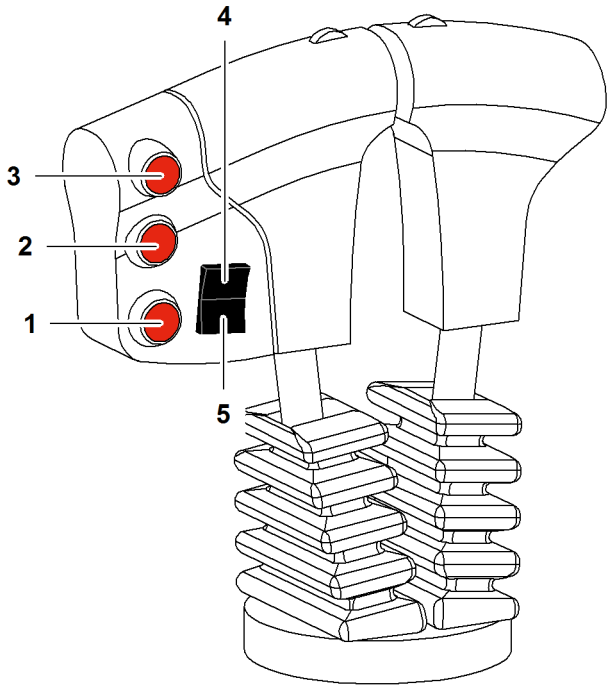

Fig. 1120: Function assignment of buttons on right double T-lever

Button	Mode	Preselection or additional button	Name and function
1	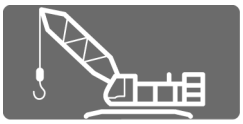 Crane mode		**Save/delete constant engine RPM** Save current diesel engine RPM as constant engine RPM or delete saved constant engine RPM.
	Assembly functions		**Save/delete constant engine RPM** Save current diesel engine RPM as constant engine RPM or delete saved constant engine RPM.
2	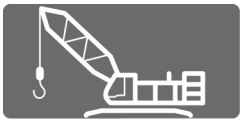 Crane mode		**Winch synchronization** Activates/deactivates winch synchronization.
	Assembly functions		**Winch synchronization** Activates/deactivates winch synchronization.

LWN/LR.x/V03.01//Auslieferung/2015-06-03/en

copyright by LIEBHERR

Button	Mode	Preselection or additional button	Name and function
3	Crane mode		**Jib luffing winch** Activates/deactivates the jib luffing winch.
	Assembly functions		**Jib luffing winch** Activates/deactivates the jib luffing winch.
4	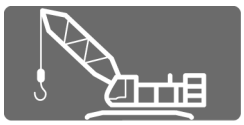 Crane mode		**Increase RPM** Increase diesel engine RPM.
	Assembly functions		**Increase RPM** Increase diesel engine RPM.
5	Crane mode		**Reduce RPM** Decrease diesel engine RPM.
	Assembly functions		**Reduce RPM** Decrease diesel engine RPM.

Tab. 363: Function assignment of buttons on right double T-lever

LWN/LR.x/V03.01//Auslieferung/2015-06-03/en

copyright by LIEBHERR

Function assignment for movement directions on right double T-lever

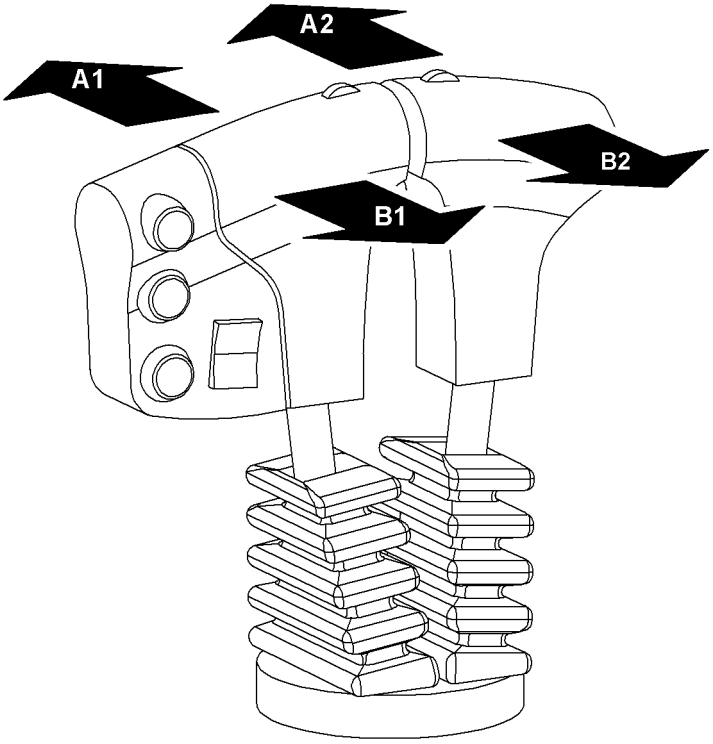

Fig. 1131: Function assignment for movement directions on right double T-lever

LWN/LR.x/V03.01//Auslieferung/2015-06-03/en

copyright by
LIEBHERR

Direction of movement	Mode	Preselection or additional button	Function
A1	Crane mode		Lower winch1
	Crane mode	Winch synchronization **or** 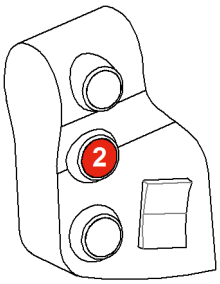	Lower winch1 and winch2
	Assembly functions		Lower winch1
	Assembly functions	Winch synchronization **or** 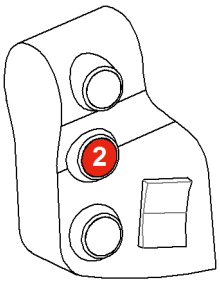	Lower winch1 and winch2

LWN/LR.x/V03.01//Auslieferung/2015-06-03/en

Direction of movement	Mode	Preselection or additional button	Function
A2	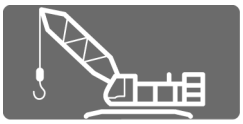 Crane mode		Lower winch2
	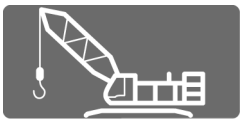 Crane mode	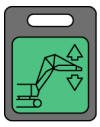 Jib luffing winch **or** 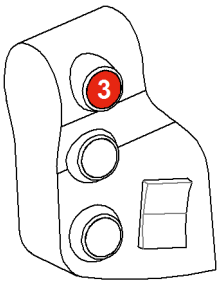	Lower jib
	Assembly functions		Lower winch2
	Assembly functions	Derrick winch	Lower main boom [A)]
	Assembly functions	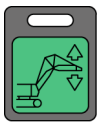 Jib luffing winch **or** 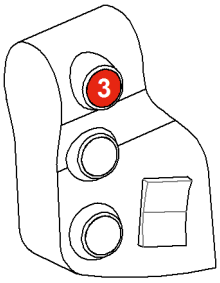	Lower jib
	Assembly functions	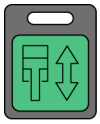 Assembly cylinder	Extend assembly cylinder

LWN/LR.x/V03.01//Auslieferung/2015-06-03/en

copyright by LIEBHERR

Direction of movement	Mode	Preselection or additional button	Function
B1	Crane mode		Lift winch1
	Crane mode	Winch synchronization **or** 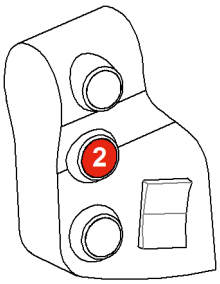	Lift winch1 and winch2
	Assembly functions		Lift winch1
	Assembly functions	Winch synchronization **or** 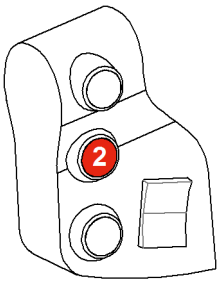	Lift winch1 and winch2

LWN/LR.x/V03.01//Auslieferung/2015-06-03/en

Direction of movement	Mode	Preselection or additional button	Function
B2	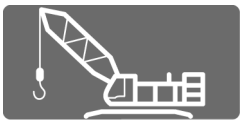 Crane mode		Lift winch2
	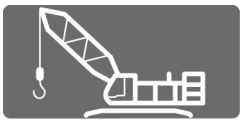 Crane mode	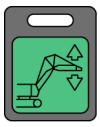 Jib luffing winch **or** 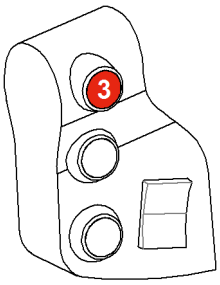	Lift jib
	Assembly functions		Lift winch2
	Assembly functions	Derrick winch	Lift main boom A)
	Assembly functions	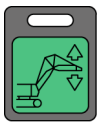 Jib luffing winch **or** 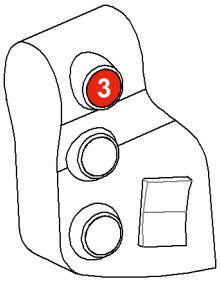	Lift jib
	Assembly functions	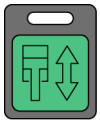 Assembly cylinder	Retract assembly cylinder

Tab. 364: Function assignment for movement directions on right double T-lever

LWN/LR.x/V03.01//Auslieferung/2015-06-03/en

copyright by LIEBHERR

A) By default, this function is on the outer T-lever. “Jib luffing winch” must be additionally selected to enable this function on the left multi-directional control lever.

LWN/LR.x/V03.01//Auslieferung/2015-06-03/en

copyright by
LIEBHERR

3.7 Foot pedals and hand levers

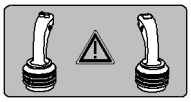

Assigned functions of the foot pedals and hand lever on a machine with two multi-directional joysticks.

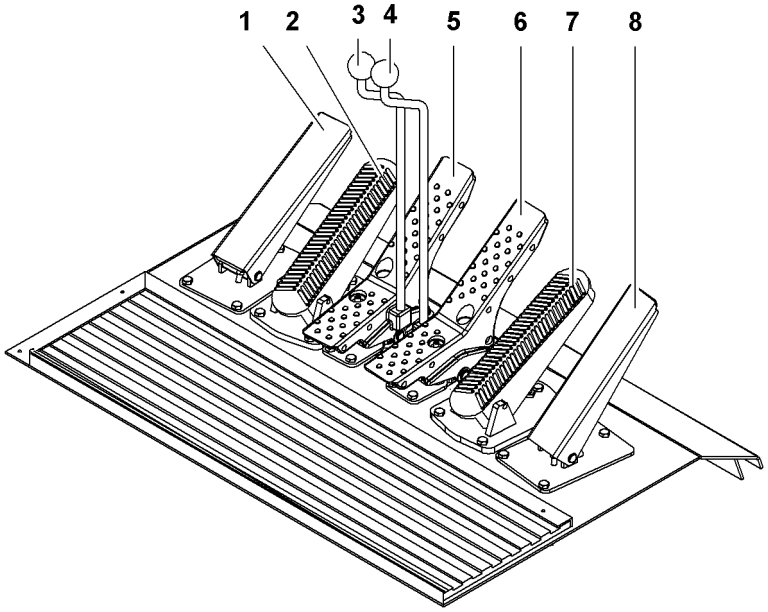

Fig. 1173: Foot pedals and hand levers (multi-directional joystick)

1	Foot pedal for *tagline winch*	**5**	`Foot pedal for *left crawler*
2	Foot pedal *brake winch2*	**6**	Foot pedal for *right crawler*
3	Hand lever for *left crawler*	**7**	Foot pedal *brake winch1*
4	Hand lever for *right crawler*	**8**	Foot pedal for *rotation speed*

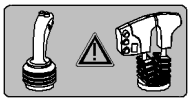

Assigned functions of the foot pedals and hand levers on a machine with a multi-directional joystick and a double T-lever.

LWN/LR.x/V03.01//Auslieferung/2015-06-03/en

copyright by
LIEBHERR

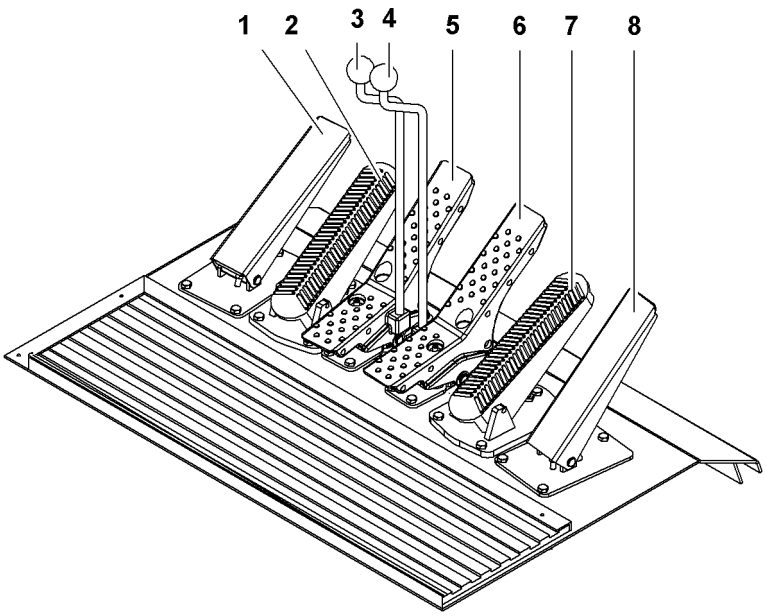

Fig. 1175: Foot pedals and hand levers (double T-lever)

1	Foot pedal for *tagline winch*	**5**	`Foot pedal for *left crawler*
2	Foot pedal *brake winch1*	**6**	Foot pedal for *right crawler*
3	Hand lever for *left crawler*	**7**	Foot pedal *brake winch2*
4	Hand lever for *right crawler*	**8**	Foot pedal for *rotation speed*

LWN/LR.x/V03.01//Auslieferung/2015-06-03/en

3.8 Control panel X11

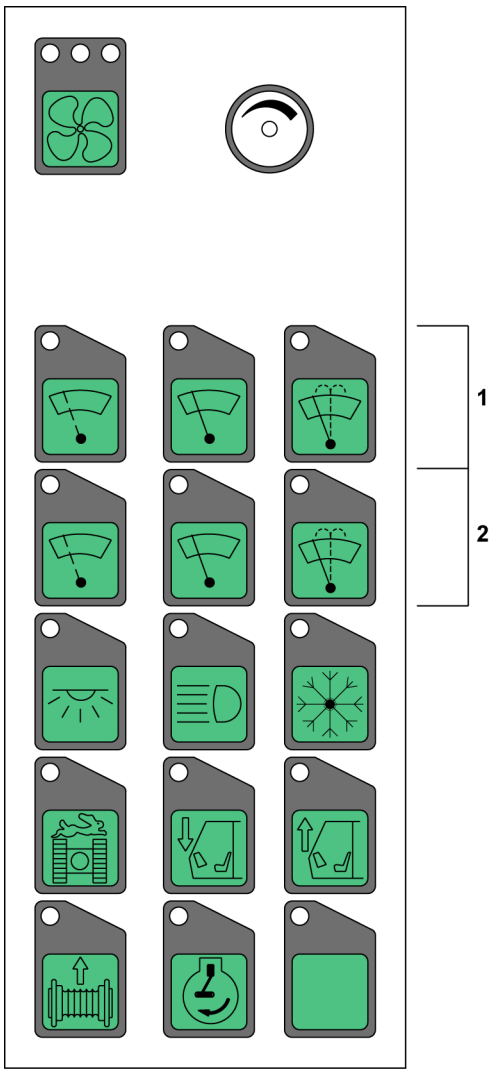

Fig. 1176: Control panel X11

1 Front windscreen wiper **2** Roof windscreen wiper

All buttons and switches contain LEDs that visibly indicate which function or settings are currently active.

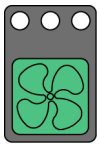

Heating and air conditioning system fan speed

Controlling the blower stages for heating or air conditioning system.

Heating and air conditioning system temperature

Controlling the temperature for heating or air conditioning system.

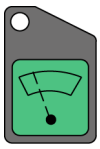

Intermittent windscreen wiper

Switching the pertaining windscreen wiper to interval mode.

LWN/LR.x/V03.01//Auslieferung/2015-06-03/en

copyright by LIEBHERR

Windscreen wiper

Switching the pertaining windshield wiper on or off.

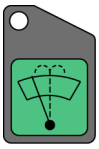

Windscreen wash system

Turning the windscreen wiper system on or off.

Engine compartment lighting

Turn the engine compartment lighting on or off.

Floodlights on uppercarriage

Turning the floodlight on the uppercarriage on or off.

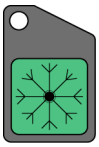

Air conditioning

Turning the air conditioning system on or off.

Crawlers overdrive

Turning the overdrive of the crawler on or off.

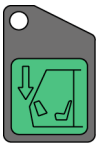

Cab tilting device down

Tilting the cabin downwards.

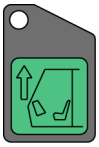

Cab tilting device up

Tilting the cabin upwards.

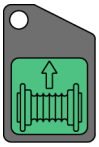

Rope reeving winch

Turning the rope reeving winch on or off with activated assembly functions.

Additional compressor

Turning the additional compressor on or off.

LWN/LR.x/V03.01//Auslieferung/2015-06-03/en

copyright by LIEBHERR

3.9 Control panel X12

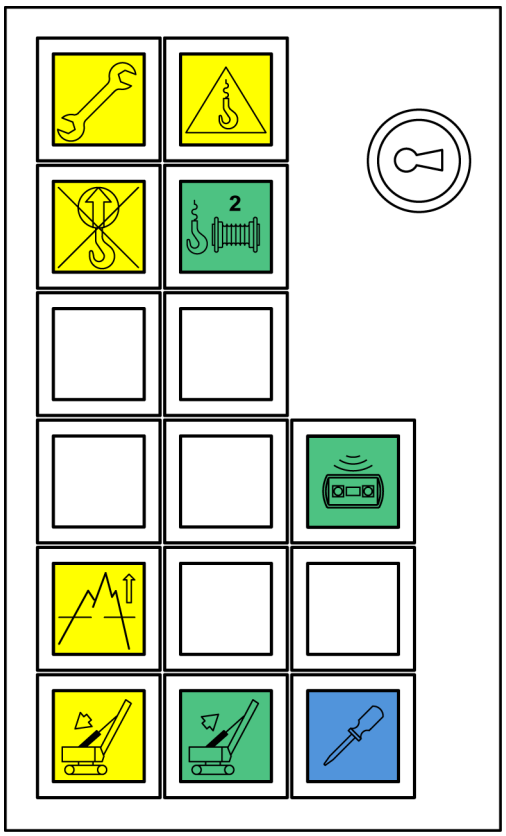

Fig. 1190: Control panel X12

All buttons and switches contain LEDs that visibly indicate which function or settings are currently active.

Assembly functions

Turning assembly functions on or off.

Unsecured free-fall operation

Turning unsecured free-fall mode for winch1 and winch2 on or off.

Load moment limitation shut down key switch release

Switch the function of the button *Load moment limiter assembly/self-lock* on control panel *X23* to the function *Load moment limiter shutdown*.

The *load moment limiter shut down enable* switch has no effect on machines with a CE load chart.

Interlock control winch2

[Not assigned]

Radio remote control

The function of the ignition key on the machine is replicated on the key switch on the radio remote control.

LWN/LR.x/V03.01//Auslieferung/2015-06-03/en

copyright by
LIEBHERR

Retract the tilting back support cylinders

Retracting the tilting-back support cylinders for the main boom. Manual operation is exclusively possible when assembly mode functions are switched on.

Extend the tilting back support cylinders

Extending the tilting-back support cylinders for the main boom.

Mode

Switch mode.

Application height

Switching the application height of the auxiliary heating.

If the machine is used at altitudes above 2800 m (9186‘ 4“ ft-in), the auxiliary heating must be switched.

LWN/LR.x/V03.01//Auslieferung/2015-06-03/en

copyright by
LIEBHERR

3.10 Control panel X23

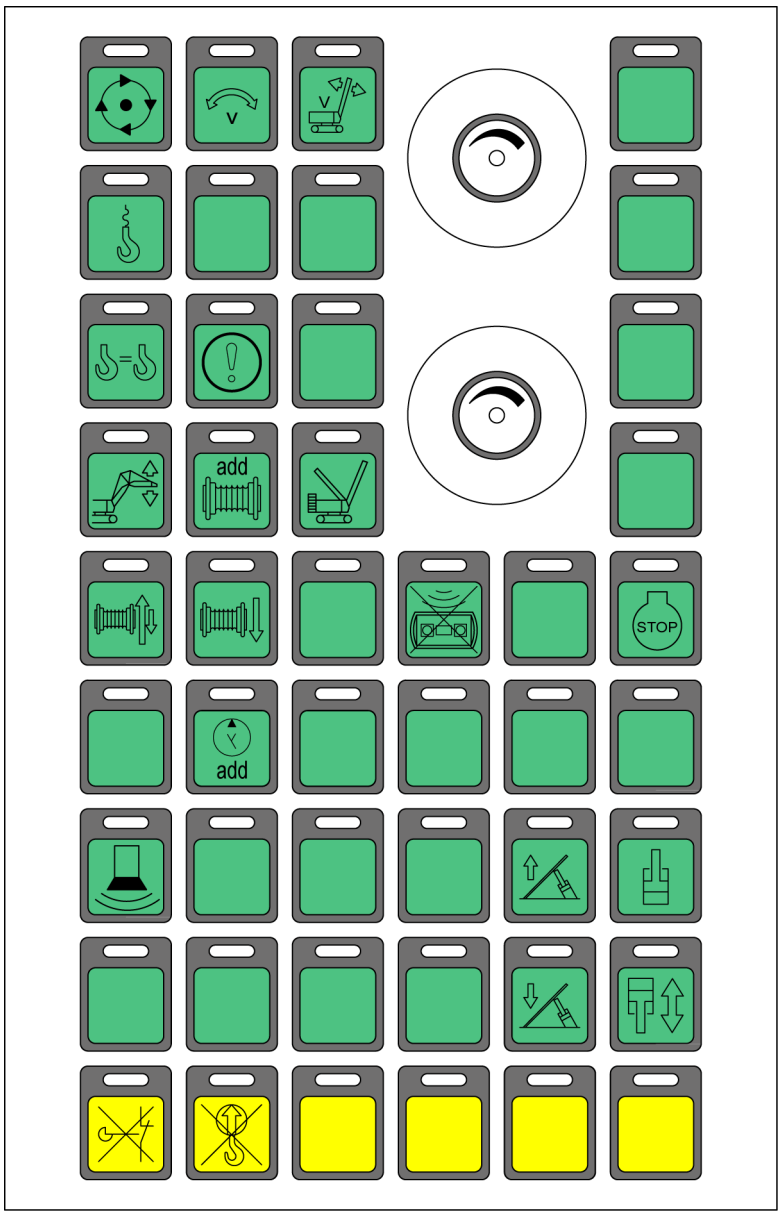

Fig. 1200: Control panel X23

All buttons and switches contain LEDs that visibly indicate which function or settings are currently active.

Swing free-wheel

Turn the swing free-wheel on or off.

Swing speed level

Select speed level for the slewing gear.

LWN/LR.x/V03.01//Auslieferung/2015-06-03/en

copyright by
LIEBHERR

Speed level boom adjustment

Selects the speed level for boom adjustment.

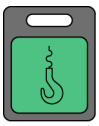

Free fall

Turn free-fall mode for winch1 and winch2 on or off.

Winch synchronization

Turn the winch synchronization on or off.

Sensitive lift

Activates/deactivates the function sensitive lift.

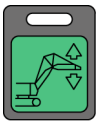

Jib luffing winch

Activates/deactivates the jib luffing winch.

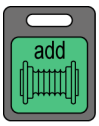

Additional winch

Turn the additional winch on or off.

Derrick winch

Activates/deactivates the derrick winch.

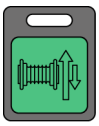

Tagline winch

Turns the tagline winch on or off.

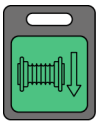

Constant pull

Turns the constant pull for winch1 or winch2 on or off.

Take/cede control

Take or release control of/on the radio remote control.

Engine stop

Switch off diesel engine.

Generator

Turn the generator on or off.

Hammer/vibrator

Turns the hammer/vibrator on or off.

LWN/LR.x/V03.01//Auslieferung/2015-06-03/en

copyright by
LIEBHERR

Extend A-frame1 cylinder

Extend A-frame1 cylinder. Works exclusively when assembly mode functions are switched on.

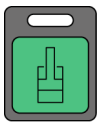

Cylinder adjustment functions

Activate/deactivate cylinder adjustment functions on undercarriage/uppercarriage.

Retract A-frame1 cylinder

Retract A-frame1 cylinder. Works exclusively when assembly mode functions are switched on.

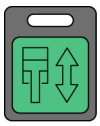

Assembly cylinder

Activates/deactivates the assembly cylinder.

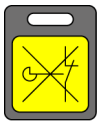

Bypass limit switch

Bypasses certain limit switches when rigging, converting and unrigging the boom with activated assembly function.

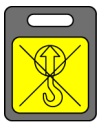

Load moment limiter assembly/self-lock

Turns the function load moment limiter assembly or load moment limiter self-lock on and off.

With machines with an ANSI load chart and after selection of the *Load moment limiter shut down enable*, the *Load moment limiter assembly/self-lock* button enables the load moment limiter shut down function.

LWN/LR.x/V03.01//Auslieferung/2015-06-03/en

copyright by
LIEBHERR

3.11 Control panel *X26* for counterweight carriage*

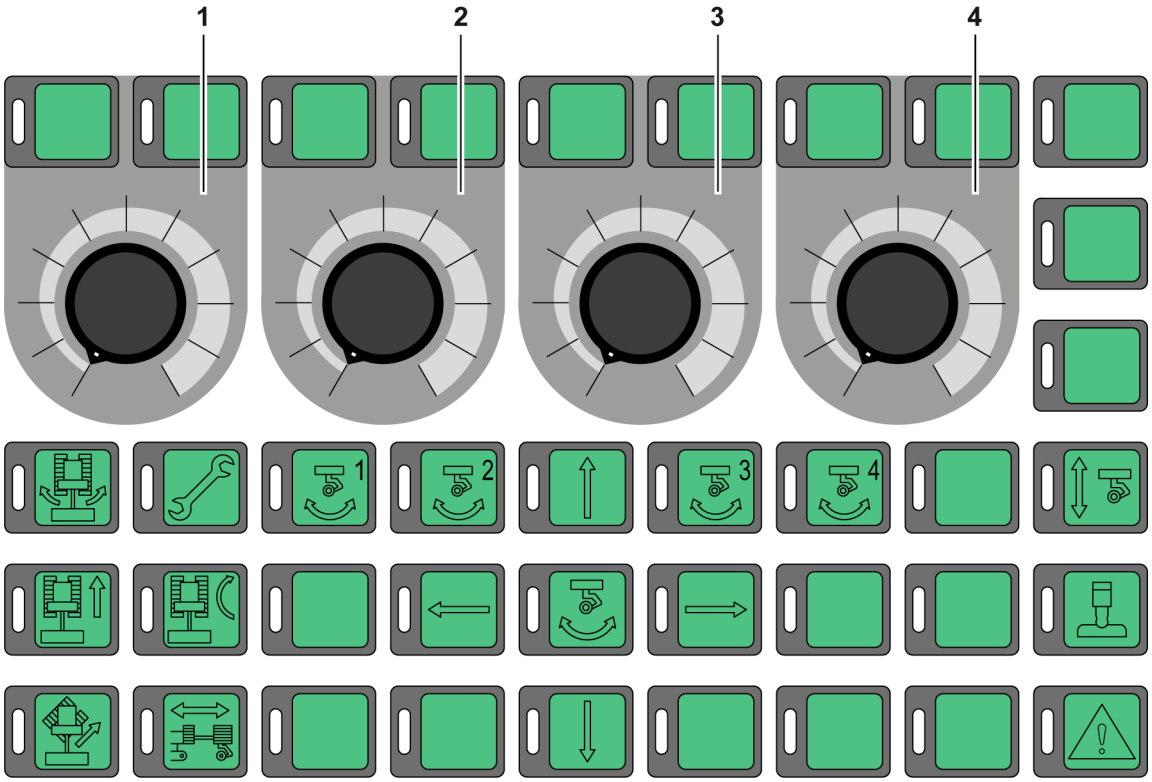

*Fig. 1222: Control panel X26 for counterweight carriage**

1 Control unit *first wheel set*
2 Control unit *second wheel set*
3 Control unit *third wheel set*
4 Control unit *fourth wheel set*

All buttons and switches contain LEDs that visibly indicate which function or settings are currently active.

LWN/LR.x/V03.01//Auslieferung/2015-06-03/en

3.11.1 Operating units

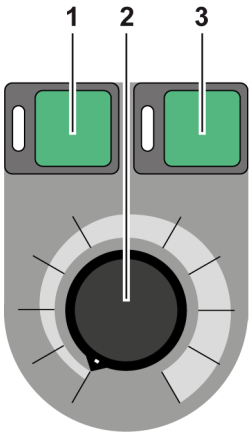

Fig. 1223: Wheel set operating unit

1 Turn the button *wheel set counter-clockwise*
2 [Not used]
3 Turn the button *wheel set clockwise*

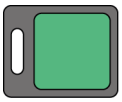

Turn wheel set counter-clockwise

Button not used.

LED in the button is lit when the wheel set moves counter-clockwise.

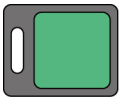

Turn wheel set clockwise

Button not used.

LED in the button is lit when the wheel set turns clockwise.

3.11.2 Buttons

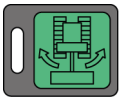

Mode rotate uppercarriage

Activates/deactivates rotate uppercarriage mode.

Wheel sets align to uppercarriage swing.

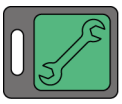

Counterweight carriage assembly functions

Activate/deactivate assembly functions of counterweight carriage.

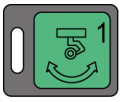

First wheel set

Select first wheel set (e.g. for service purposes).

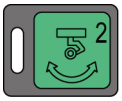

Second wheel set

Select second wheel set (e.g. for service purposes).

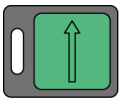

Decreasing radius/support

Decrease radius of counterweight carriage.

Decrease support of counterweight carriage.

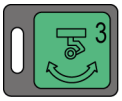

Third wheel set

Select third wheel set (e.g. for service purposes).

LWN/LR.x/V03.01//Auslieferung/2015-06-03/en

copyright by
LIEBHERR

Control panel *X26* for counterweight carriage*

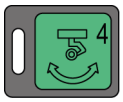

Fourth wheel set

Select fourth wheel set (e.g. for service purposes).

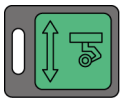

Wheel set height adjustment

Activates/deactivates height adjustment of the wheel sets.

Height adjustment is operated on counterweight carriage.

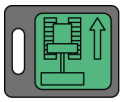

Trailer travel mode

Activates/deactivates trailer travel mode.

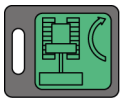

Follower travel mode

Activates/deactivates follower travel mode.

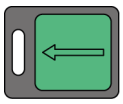

Turning the wheel sets counter-clockwise

Turns the wheel sets counter-clockwise.

Align wheel sets

Align wheel sets in line with selected mode.

If no mode was selected, all wheel sets can be aligned manually.

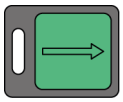

Turning the wheel sets clockwise

Turns the wheel sets clockwise.

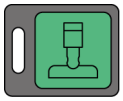

Counterweight carriage support

Activates/deactivates counterweight carriage support.

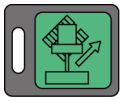

Crab mode

Activates/deactivates crab mode.

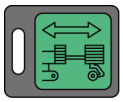

Counterweight carriage radius adjustment

Activates/deactivates radius adjustment of counterweight carriage.

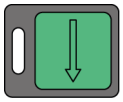

Increasing radius/support

Increases the radius of the counterweight carriage.

Increases the support of the counterweight carriage.

Confirming error message

Confirms error message and releases operating lock.

LWN/LR.x/V03.01//Auslieferung/2015-06-03/en

copyright by
LIEBHERR

3.12 Monitor

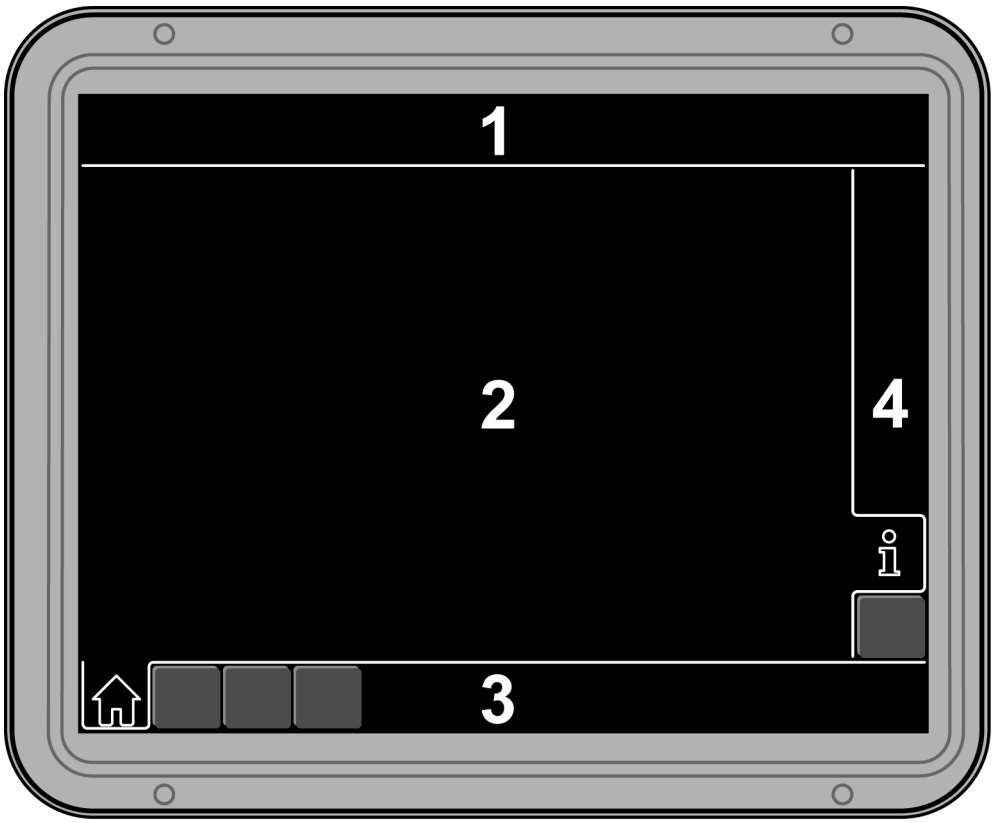

Fig. 1244: Monitor sections

1	Status bar	**3**	Menu bar
2	Display section	**4**	Submenu bar

3.12.1 Status bar

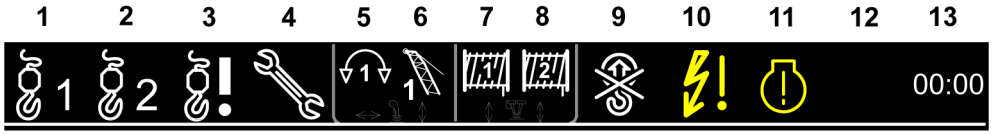

Fig. 1245: Status bar - positioning

Position 1

Free fall winch 1

Winch 1 is in free fall.

Sensitive lift (blinks)

Sensitive lift is activated.

LWN/LR.x/V03.01//Auslieferung/2015-06-03/en

copyright by LIEBHERR

Position 2

Free fall winch 2

Winch 2 is in free fall.

Position 3

Secured free-fall operation

Secured free-fall mode activated.

Unsecured free-fall operation

Unsecured free-fall mode activated.

Radio remote control* active

Radio remote control is turned on.

Machine functions are controlled with the radio remote control.

If the symbol blinks, the control of the machine function is suspended.

Radio remote control* inactive

Radio remote control is turned on.

Machine functions are controlled from the cabin.

Radio remote control* connection error

Connection to radio remote control not possible.

Position 4

Assembly functions

Assembly functions are switched on.

Emergency operation control*

Control panel of the emergency operation control is connected.

Position 5

Swing speed level

Speed level 1 for the swing is set.

Swing speed level

Speed level 2 for the swing is set.

Swing speed level

Speed level 3 for the swing is set.

LWN/LR.x/V03.01//Auslieferung/2015-06-03/en

copyright by
LIEBHERR

Swing free-wheel

Swing free-wheel is switched on.

Swing locked

Swing is locked.

Position 6

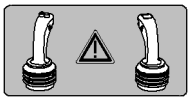

Assignment on a machine with two multi-directional control levers

Winch2

Winch2 is selected.

Winch2 locked

Winch2 is locked.

Derrick hoist cylinder (only in derrick mode)

Derrick hoist cylinder is selected.

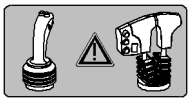

Assignment on a machine with a multi-directional control lever and a double T-lever.

Speed level main boom

Speed level 1 is selected for the main boom.

Speed level main boom

Speed level 2 is selected for the main boom.

Speed level main boom

Speed level 3 is selected for the main boom.

Main boom locked

Main boom is locked.

Speed level jib

Speed level 1 is set for the jib.

Speed level jib

Speed level 2 is set for the jib.

Speed level jib

Speed level 3 is set for the jib.

Derrick boom (only in derrick mode)

Derrick boom is selected.

LWN/LR.x/V03.01//Auslieferung/2015-06-03/en

copyright by
LIEBHERR

Derrick hoist cylinder (only in derrick mode)

Derrick hoist cylinder is selected.

Position 7

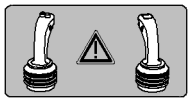

Assignment on a machine with two multi-directional control levers

Speed level main boom

Speed level 1 is selected for the main boom.

Speed level main boom

Speed level 2 is selected for the main boom.

Speed level main boom

Speed level 3 is selected for the main boom.

Main boom locked

Main boom is locked.

Speed level jib

Speed level 1 is set for the jib.

Speed level jib

Speed level 2 is set for the jib.

Speed level jib

Speed level 3 is set for the jib.

Derrick boom (only in derrick mode)

Derrick boom is selected.

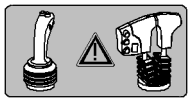

Assignment on a machine with a multi-directional control lever and a double T-lever.

winch1

Winch1 is selected.

Winch1 locked

Winch1 is locked.

Winch synchronization

Winch synchronization is switched on.

LWN/LR.x/V03.01//Auslieferung/2015-06-03/en

copyright by
LIEBHERR

Position 8

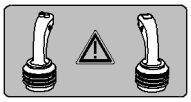

Assignment on a machine with two multi-directional control levers

Winch1

Winch1 is selected.

Winch1 locked

Winch1 is locked.

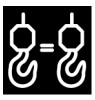

Winch synchronization

Winch synchronization is switched on.

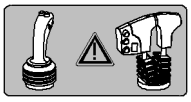

Assignment on a machine with a multi-directional control lever and a double T-lever.

Winch2

Winch2 is selected.

Winch2 locked

Winch2 is locked.

Position 9

Deactivating the load moment limiter

Load moment limiter is turned off.

Load moment limiter warning (lit yellow)

Load moment is utilized to more than 90% capacity.

Stop load moment limiter (blinks red)

Load moment is utilized to more than 100 % capacity.

Danger of toppling backwards (lit red)

Machine may topple backwards due to insufficient radius.

Position 10

Electrical system warning (lit yellow)

An error has occurred in the electronics.

LWN/LR.x/V03.01//Auslieferung/2015-06-03/en

copyright by
LIEBHERR

Electrical system error (blinks red)

An error has occurred in the electrical system.

Position 11

General diesel engine error (lit yellow)

General diesel engine error has occurred.

Grave diesel engine error (blinks red)

A grave diesel engine error has occurred.

Position 12

Assist crane required (blinks)

Assist crane is required to erect the boom or lay down the boom.

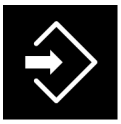

Data recording active

Data are recorded.

Initialize data recording (lit yellow)

Data recording is being initialized.

Data recording error (lit red)

Error in data recording.

Position 13

Time

Current time.

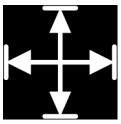

Drive limited (blinks)

Several limit switches block the current movement direction of the control lever. If only one limit switch blocks the current movement direction of the control lever, the symbol of the corresponding limit switch blinks in place of the symbol *Drive limited*.

A-frame1, rear limit switch (blinks)

Minimum A-frame1 angle reached. Lift main boom is blocked.

Main boom, top limit switch (blinks)

Maximum main boom angle reached. Lift main boom is blocked.

LWN/LR.x/V03.01//Auslieferung/2015-06-03/en

copyright by
LIEBHERR

Main boom, bottom limit switch (blinks)

Minimum main boom angle reached. Lower main boom is blocked.

Main boom, top angle limiter (blinks)

Maximum main boom angle exceeded. Lift main boom is blocked.

Main boom, bottom angle limiter (blinks)

Minimum main boom angle exceeded. Lower main boom is blocked.

Jib, top limit switch (blinks)

Maximum jib angle reached. Lift jib is blocked.

Jib, bottom limit switch (blinks)

Minimum jib angle reached. Lower jib is blocked.

Jib, top angle limiter (blinks)

Maximum jib angle exceeded. Lift jib is blocked.

Jib, bottom angle limiter (blinks)

Minimum jib angle exceeded. Lower jib is blocked.

Winch1, top limit switch (blinks)

Maximum lifting height of winch1 reached. Lift winch1, lower main boom and lower jib are blocked.

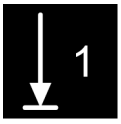

Winch1, bottom limit switch (blinks)

Only three windings left on rope drum of winch1. Lower winch1 is blocked.

Winch2, top limit switch (blinks)

Maximum lifting height of winch2 reached. Lift winch2, lower main boom and lower jib are blocked.

Winch2, bottom limit switch (blinks)

Only three windings left on the rope drum of winch2. Lower winch2 is blocked.

Auxiliary winch, top limit switch (blinks)

Maximum lifting height of auxiliary winch reached. Lift auxiliary winch is blocked.

Auxiliary winch, bottom limit switch (blinks)

Only three windings left on auxiliary winch drum. Lower auxiliary winch is blocked.

LWN/LR.x/V03.01//Auslieferung/2015-06-03/en

copyright by
LIEBHERR

Swing, slewing range limitation counter-clockwise (blinks)

Counter-clockwise slewing range limitation has been reached. Turning the upper-carriage counter-clockwise is locked.

Swing, slewing range limitation clockwise (blinks)

Clockwise slewing range limitation has been reached. Turning the uppercarriage clockwise is locked.

Tilting back supports cylinder (blinks)

Tilting-back support cylinders are not fully extended. Lift main boom is blocked.

A-frame1 cylinder (blinks)

A-frame1 cylinders are not fully extended (only if assembly mode functions are switched on). Lift and lower main boom are blocked.

Locking flaps error (blinks)

Main boom with luffing jib erected above a specified angle and locking flaps are not yet in proper position. Lift main boom and jib are blocked.

Winch blocked due to selection of different load position (blinks)

Winch is blocked due to different load position.

Slack rope monitoring (blinks)

Stop due to slack rope monitoring has triggered.

Derrick boom, rear limit switch (blinks, only in derrick mode)

Minimum derrick boom angle has been reached (only with activated assembly functions). Lift derrick boom is blocked.

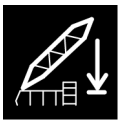

Derrick boom, working position limit switch (blinks, only in derrick mode)

Derrick boom is not in working position.

Derrick winch, bottom limit switch (blinks, only in derrick mode)

Only 3 windings left on rope drum of derrick winch. Lower derrick winch is blocked.

EXT

External control limit switch (blinks)

Limit switch was triggered by external control.

3.12.2 Display section

The display section provides information about current machine parameters.

LWN/LR.x/V03.01//Auslieferung/2015-06-03/en

copyright by
LIEBHERR

3.12.3 Menu bar

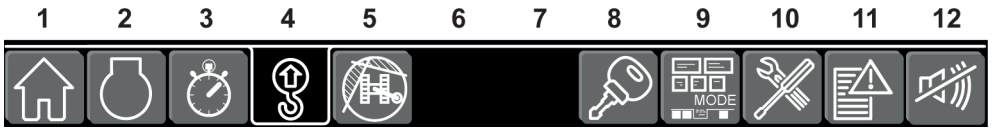

Fig. 1335: Menu bar - positioning

Position 1

Operation

Switch to the *Operation* screen.

Operation (blinks yellow)

Switch to the screen *Operation*. There is at least one warning.

Operation (blinks red)

Switch to the *Operation* screen. There is at least one operation error.

Position 2

Aggregate

Switch to the *Aggregate* screen.

Aggregate (blinks yellow)

Switch to the *Aggregate* screen. There is at least one warning.

Aggregate (blinks red)

Switch to the *Aggregate* screen. There is at least one operation error.

Position 3

Operating hours

Switch to the *Operating hours* screen.

Operating hours (blinks yellow)

Switch to the *Operating hours* screen. There is at least one warning.

Operating hours (blinks red)

Switch to the *Operating hours* screen. There is at least one operation error.

LWN/LR.x/V03.01//Auslieferung/2015-06-03/en

copyright by
LIEBHERR

Position 4

Setup

Switch to the *Setup* screen.

Position 5

Working range limitation

Switch to the *Working range limitation* screen.

Working range limitation (blinks yellow)

Switch to the *Working range limitation* screen. Machine was moved and working range limitation must be reprogramed.

Position 8

Access control

Switch to the *Access control* screen.

Position 9

Mode

Switch to the *Mode* screen.

Position 10

Settings

Switch to the *Settings* screen.

Position 11

Error messages

Switch to the *Error messages* screen.

Error messages (blinks red)

Switch to the screen *Error messages*. At least one unconfirmed error message is present.

Position 12

Warning buzzer

Turn off warning buzzer and confirm error message. Only visible if an operation error occurs.

LWN/LR.x/V03.01//Auslieferung/2015-06-03/en

copyright by
LIEBHERR

3.12.4 Submenu bar

Setup - load chart

Switch to the screen *Setup - load chart*.

Working range limitation - working range limitation

Switch to the *Working range limitation - working range limitation* screen.

Working range limitation - lifting height limitation

Switch to the *Working range limitation - lifting height limitation* screen.

Settings - Litronic testing system

Switch to the *Settings - Litronic testing system* screen.

Settings - units

Switch to the *Settings - units* screen.

Settings - components

Switch to the *Settings - components* screen.

LWN/LR.x/V03.01//Auslieferung/2015-06-03/en

copyright by
LIEBHERR

3.13 Screen *Start*

These symbols appear on the start screen as soon as the machine is switched on.

No action possible during start-up.

Fig. 1360: Start screen

Establishing connection (counts up to three)

Connected

Receiving data

Visualization

Download

LWN/LR.x/V03.01//Auslieferung/2015-06-03/en

3.14 *Mode* screen

Operation

Switch to the *Operation* screen.

The *Operation* screen informs the machine operator about the most important information during operation.

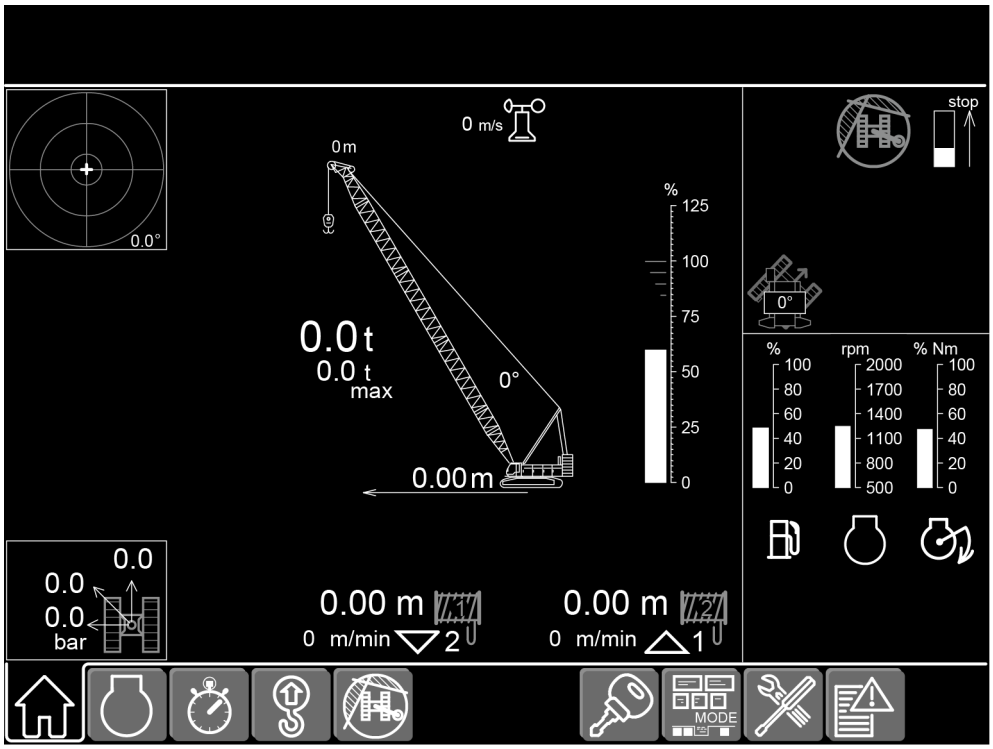

Fig. 1367: Operation screen

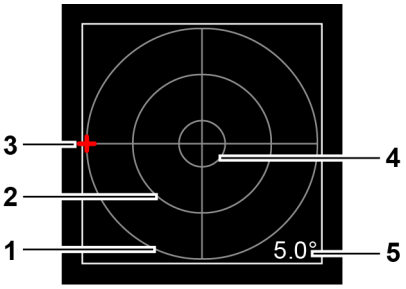

Fig. 1368: Screen section Inclination display

1 Inclination circle 5°
2 Inclination circle 3°
3 Bubble
4 Inclination circle 1°
5 Inclination angle of machine

The bubble **3** is displayed in white within the dip circle 1° **4**.

The bubble **3** is displayed in yellow within the dip circle 3° **2**.

The bubble **3** is displayed in red within the dip circle 5° **1**.

LWN/LR.x/V03.01//Auslieferung/2015-06-03/en

copyright by
LIEBHERR

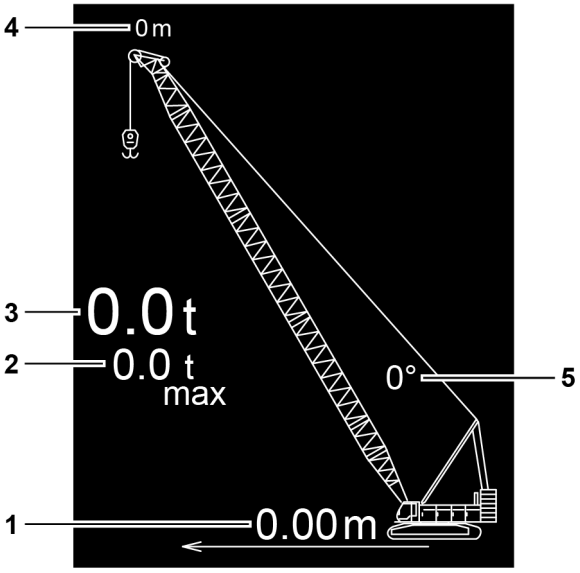

Fig. 1369: Screen section Operation

1 Radius of the load on main boom
2 Maximum load on main boom
3 Load on main boom
4 Rope pulley height at main boom
5 Main boom angle

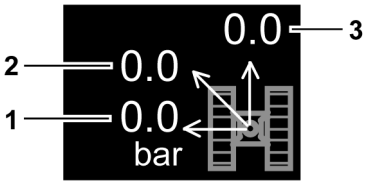

Fig. 1370: Screen section Ground pressure

1 Maximum ground pressure to the side
2 Maximum ground pressure across one edge
3 Maximum ground pressure forward

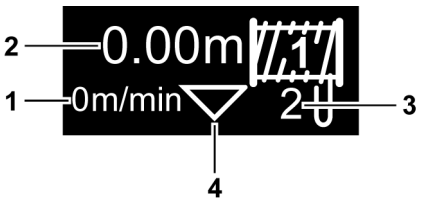

Fig. 1371: Screen section Winch1

1 Speed of load on winch1
2 Load travel path on winch1
3 Reeving of winch1 rope
4 Movement direction of load on winch1

LWN/LR.x/V03.01//Auslieferung/2015-06-03/en

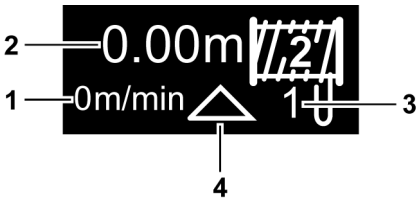

Fig. 1372: Screen section Winch2

1	Speed of load on winch2	**3**	Reeving of winch2 rope
2	Load travel path on winch2	**4**	Movement direction of load on winch2

Wind speed

Current wind speed.

Wind speed (lit yellow)

Wind speed is high.

Wind speed (blinks red)

Wind speed too high.

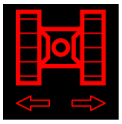

Track monitoring (blinks red)

Narrow track selected as track width and wide track is active.

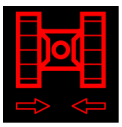

Track monitoring (blinks red)

Wide track selected as track width and narrow track is active.

Warning danger of toppling (lit yellow)

Risk of machine toppling.

Danger of toppling stop (lit red)

Risk of machine toppling.

Slewing range limitation

Slewing range limitation is active. Rotate uppercarriage is locked.

Working range limitation

Working range limitation is active.

Working range limitation stop

Distance up to the stop of the working range limitation.

If the symbol is lit red, a stop of the working range limitation has been reached.

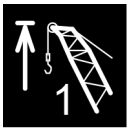

Top lifting height limitation winch1

Top lifting height limitation of winch1 is active. Lift winch1 is locked.

LWN/LR.x/V03.01//Auslieferung/2015-06-03/en

copyright by
LIEBHERR

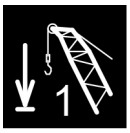

Bottom lifting height limitation winch1

Bottom lifting height limitation of winch1 is active. Lower winch1 is blocked.

Top lifting height limitation winch2

Top lifting height limitation of winch2 is active. Lift winch2 is locked.

Bottom lifting height limitation winch2

Bottom lifting height limitation of winch2 is active. Lower winch2 is blocked.

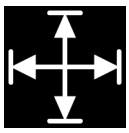

General limitation

General limitation is active. Movements that change the radius are locked.

Radius limitation maximum radius

Radius limitation maximum radius is active. Movements that enlarge the radius are locked.

Radius limitation minimum radius

Radius limitation minimum radius is active. Movements that reduce the radius are locked.

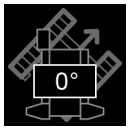

Uppercarriage slewing angle

Slewing angle of uppercarriage.

External control

External control mode is activated.

External control (lit yellow)

Communication problem between external control and machine.

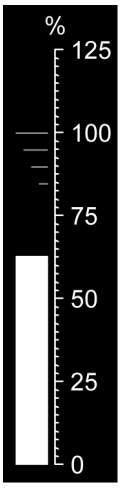

Load moment utilization

Utilization of the load moment.

LWN/LR.x/V03.01//Auslieferung/2015-06-03/en

copyright by
LIEBHERR

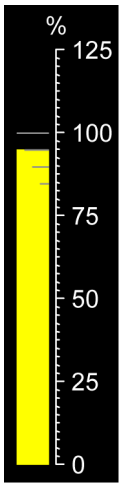

Load moment utilization (lit yellow)

Load moment is used to more than 90 % capacity.

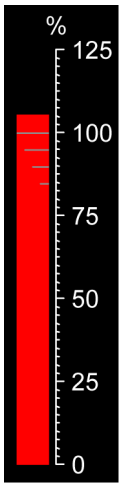

Load moment utilization (blinks red)

Load moment is used to more than 100 % capacity.

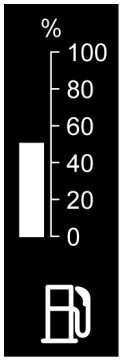

Fuel fill level

Fill level of the fuel tank as percentage of the maximum filling capacity.

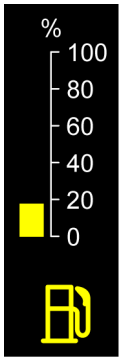

Fuel fill level (lit yellow)

Fill level of the fuel tank is less than 15 % of the maximum filling capacity.

LWN/LR.x/V03.01//Auslieferung/2015-06-03/en

copyright by
LIEBHERR

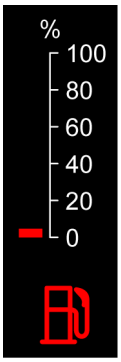

Fuel fill level (blinks red)

Fill level of the fuel tank is less than 5 % of the maximum filling capacity.

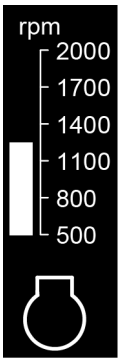

Diesel engine RPM

RPM of the diesel engine.

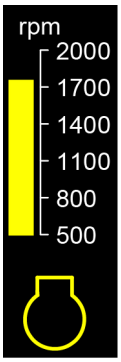

Diesel engine RPM (lit yellow)

High diesel engine RPM.

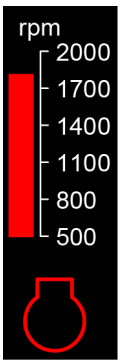

Diesel engine RPM (blinks red)

Diesel engine RPM is too high.

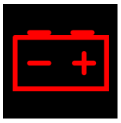

Battery charge (blinks red)

Battery is not charged.

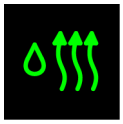

Hydraulic oil heater (lit green)

The temperature of the hydraulic oil is increased automatically with the hydraulic oil heater (if fit).

LWN/LR.x/V03.01//Auslieferung/2015-06-03/en

copyright by
LIEBHERR

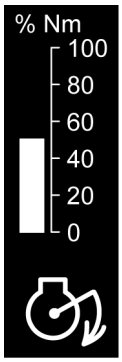

Diesel engine utilization

Utilization of the diesel engine as percentage of the currently possible maximum utilization.

Diesel engine (lit yellow)

Diesel engine is preheated.

Diesel engine (lit green)

Diesel engine is ready to start.

Diesel engine

Diesel engine is post-heated.

Exhaust aftertreatment (lit yellow)

Fill level of urea tank is low or error in exhaust aftertreatment system.

Exhaust aftertreatment (blinks red)

Fill level of urea tank is too low or error in exhaust aftertreatment system.

Exhaust gas temperature

Exhaust gas temperature is increased.

Exhaust aftertreatment system (lit yellow)

Fill level of urea tank is low or error in exhaust aftertreatment system.

Exhaust aftertreatment system (blinks red)

Fill level of urea tank is too low or error in exhaust aftertreatment system.

LWN/LR.x/V03.01//Auslieferung/2015-06-03/en

copyright by
LIEBHERR

3.15 Screen *Operation* in derrick mode

Operation

Switch to the *Operation* screen.

The *Operation* screen informs the machine operator about the most important information during operation.

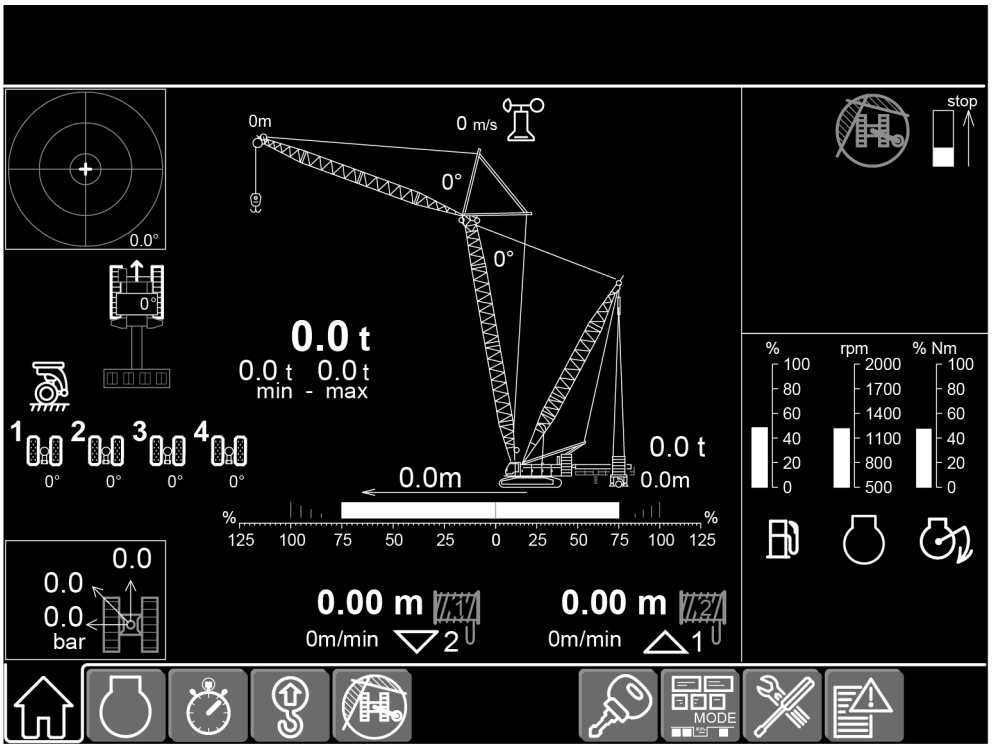

Fig. 1414: Screen Operation in derrick mode

The symbols of the *Operation* screen in derrick mode are identical with the symbols of the *Operation* (For more information see: 3.14 *Mode* screen, page 693) screen.

The additional symbols of the *Operation* screen in derrick mode are described in the following.

LWN/LR.x/V03.01//Auslieferung/2015-06-03/en

copyright by
LIEBHERR

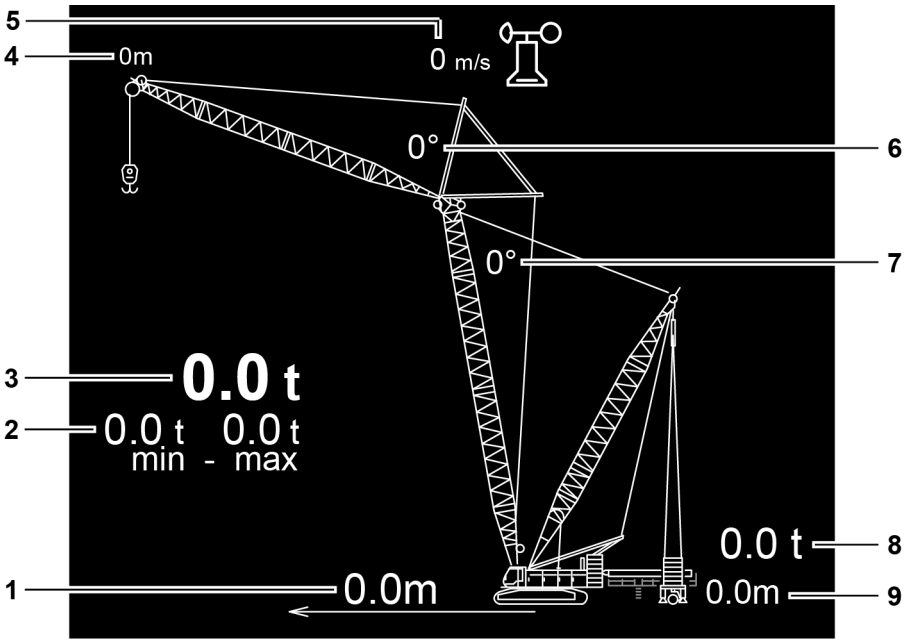

Fig. 1415: Screen section Operation with counterweight carriage

1	Radius of load on boom	**6**	Jib angle
2	Minimum and maximum load on boom	**7**	Main boom angle
3	Load on boom	**8**	Load on derrick boom
4	Pulley height on boom	**9**	Radius of counterweight carriage
5	Wind speed		

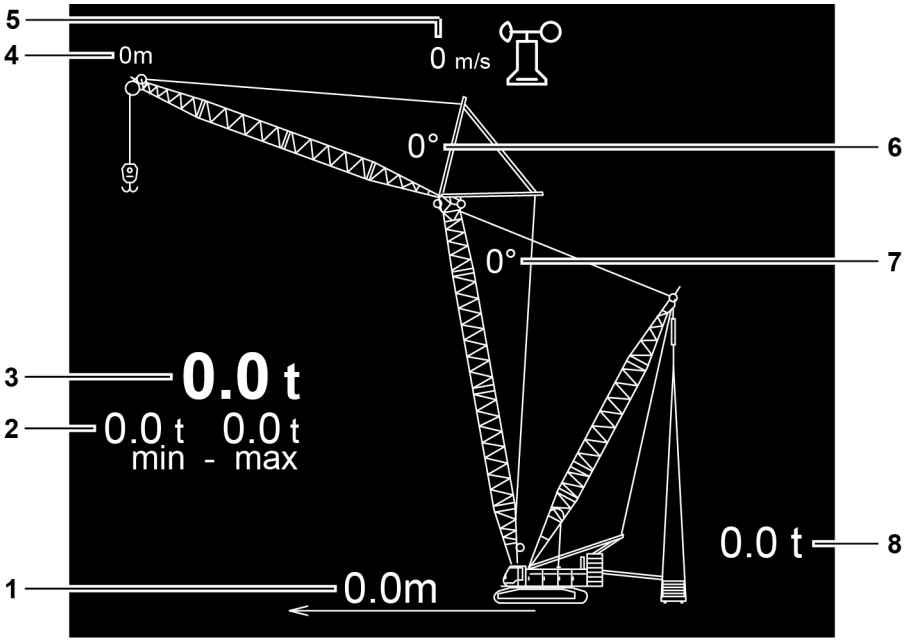

Fig. 1416: Screen section Operation with suspended counterweight

1	Radius of load on boom	**5**	Wind speed
2	Minimum and maximum load on boom	**6**	Jib angle
3	Load on boom	**7**	Main boom angle
4	Pulley height on boom	**8**	Load on derrick boom

LWN/LR.x/V03.01//Auslieferung/2015-06-03/en

copyright by
LIEBHERR

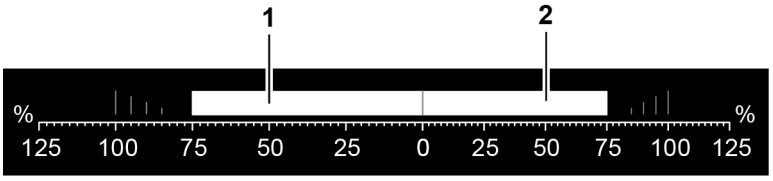

Fig. 1417: Screen section Load moment utilization

1 Utilization of load moment on boom

2 Utilization of load moment on derrick boom

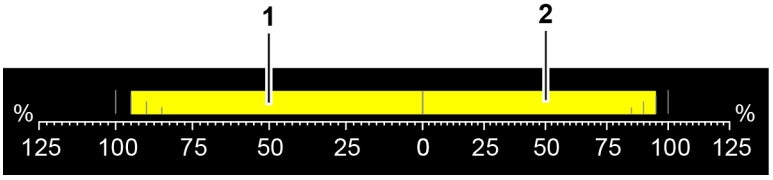

Fig. 1418: Screen section Load moment utilization (lit yellow)

1 Load moment on boom is used to more than 90% capacity

2 Load moment on derrick boom is used to more than 90% capacity

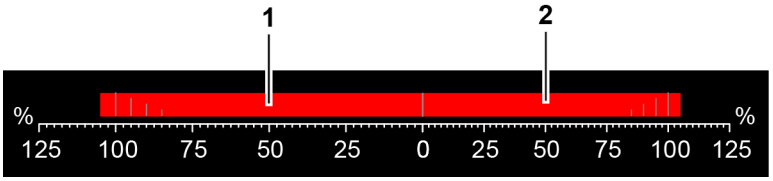

Fig. 1419: Screen section Load moment utilization (blinks red)

1 Load moment on boom is used to more than 100% capacity

2 Load moment on derrick boom is used to more than 100% capacity

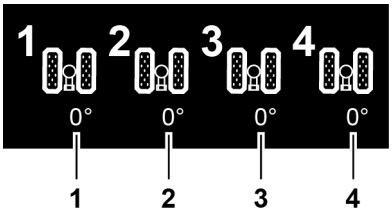

Fig. 1420: Screen section wheel sets

4 Angle of first wheel set

4 Angle of second wheel set

4 Angle of third wheel set

4 Angle of fourth wheel set

Wheel set (lit yellow)

Wheel set must be aligned.

Wheel set (lit red)

Wheel set is not aligned.

Operation of counterweight carriage blocked (lit yellow)

Operation of counterweight carriage is blocked due to an error.

Wheel sets are down

Wheel sets are down.

LWN/LR.x/V03.01/Auslieferung/2015-06-03/en

copyright by
LIEBHERR

Wheel sets are down (lit yellow)

Pressure in wheel sets is too high and at least one wheel set must be aligned.

Wheel sets are lifted

Wheel sets are lifted.

Wheel sets are lifted (lit yellow)

Wheel sets in unknown position.

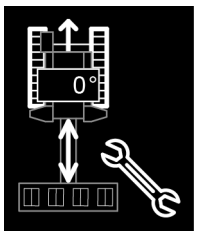

Assembly functions counterweight carriage

Assembly functions counterweight carriage are activated.

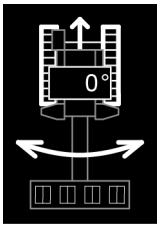

Swing uppercarriage mode

Swing uppercarriage mode is activated.

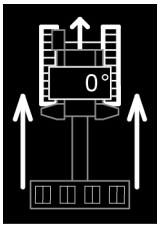

Trailer travel mode

Trailer travel mode is activated.

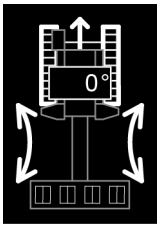

Follower travel mode

Follower travel mode is activated.

The arrows are indicated either on the left or on the right side.

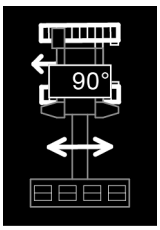

Crab mode

Crab mode is activated.

LWN/LR.x/V03.01//Auslieferung/2015-06-03/en

copyright by
LIEBHERR

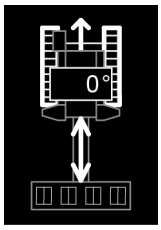

Radius adjustment counterweight carriage

Radius adjustment counterweight carriage is activated.

LWN/LR.x/V03.01//Auslieferung/2015-06-03/en

copyright by
LIEBHERR

3.16 *Aggregate* screen

Aggregate

Switch to the *Aggregate* screen.

The *Aggregate* screen provides information on the operating status of the main aggregate.

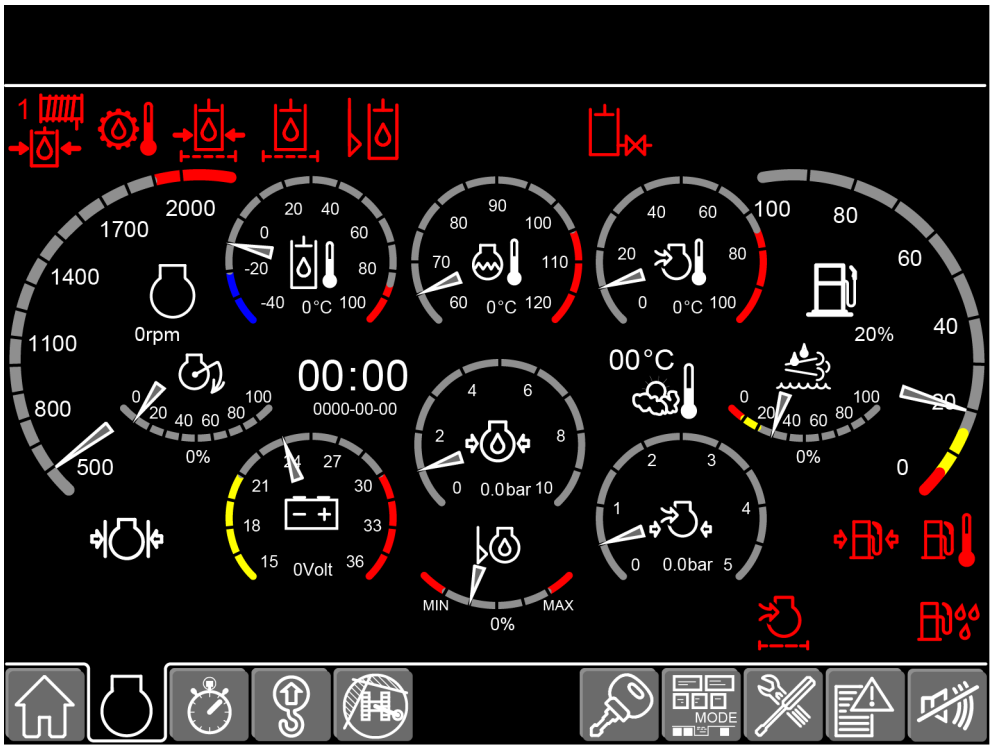

Fig. 1435: Aggregate screen

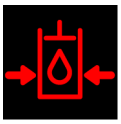

Supply pressure (blinks red)

Supply pressure is too low.

Supply pressure winch1 (blinks red)

Supply pressure on winch1 is too low.

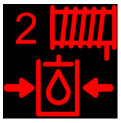

Supply pressure winch2 (blinks red)

Supply pressure on winch2 is too low.

Gearbox oil temperature (blinks red)

Temperature of the gearbox oil in the distribution gearbox is too high.

LWN/LR.x/V03.01//Auslieferung/2015-06-03/en

copyright by
LIEBHERR

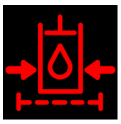

Supply pressure oil filter (blinks red)

Supply pressure oil filter does not work correctly.

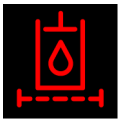

Hydraulic oil filter (blinks red)

Hydraulic oil filter does not work correctly.

Hydraulic oil fill level (lit yellow)

Fill level of the hydraulic oil tank is low.

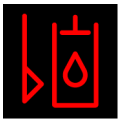

Hydraulic oil fill level (blinks red)

Fill level of the hydraulic oil tank is too low.

Hydraulic oil fill level (lit yellow)

Fill level of the hydraulic oil tank is high.

Coolant fill level (lit yellow)

Coolant fill level is low.

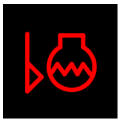

Coolant fill level (blinks red)

Coolant fill level is too low.

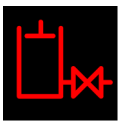

Gate valve hydraulic oil tank (blinks red)

Gate valve *hydraulic oil tank* is closed.

Exhaust aftertreatment (lit yellow)

Fill level of urea tank is low or error in exhaust aftertreatment system.

Exhaust aftertreatment (blinks red)

Fill level of urea tank is too low or error in exhaust aftertreatment system.

Exhaust gas temperature

Exhaust gas temperature is increased.

LWN/LR.x/V03.01//Auslieferung/2015-06-03/en

copyright by
LIEBHERR

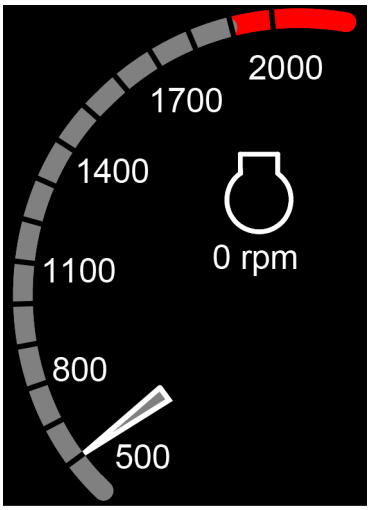

RPM

RPM of the diesel engine.

RPM (lit yellow)

Diesel engine RPM is high.

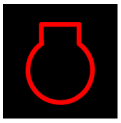

RPM (blinks red)

Diesel engine RPM is too high.

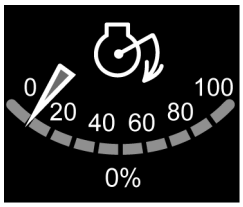

Diesel engine utilization

Utilization of the diesel engine as percentage of the currently possible maximum utilization.

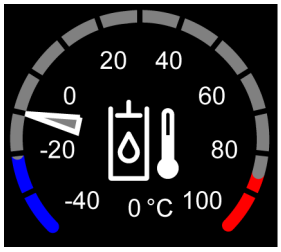

Hydraulic oil temperature

Temperature of the hydraulic oil.

Hydraulic oil temperature (lit yellow)

Hydraulic oil temperature is high.

Hydraulic oil temperature (blinks red)

Hydraulic oil temperature is too high.

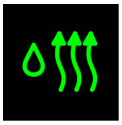

Hydraulic oil heater (lit green)

The hydraulic oil heater (if fit) automatically raises the hydraulic oil temperature to -10 °C (14 °F).

LWN/LR.x/V03.01//Auslieferung/2015-06-03/en

copyright by
LIEBHERR

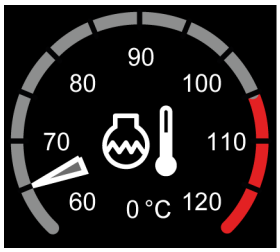

Coolant temperature

Temperature of the diesel engine coolant.

Coolant temperature (lit yellow)

Temperature of the diesel engine coolant is high.

Coolant temperature (blinks red)

Temperature of the diesel engine coolant is too high.

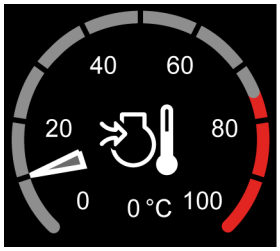

Charge air temperature

Temperature of the diesel engine charge air.

Charge air temperature (lit yellow)

Temperature of the diesel engine charge air is high.

Charge air temperature (blinks red)

Temperature of the diesel engine charge air is too high.

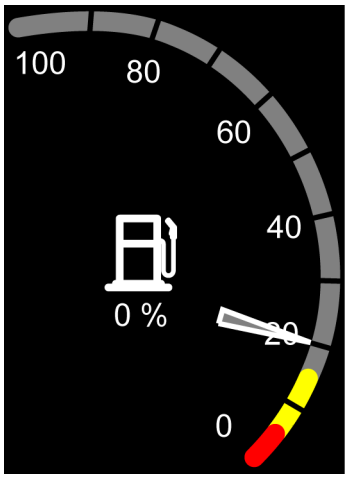

Fuel fill level

Fill level of the fuel tank as percentage of the maximum filling capacity.

Fuel fill level (lit yellow)

Fill level of the fuel tank is less than 15 % of the maximum filling capacity.

Fuel fill level (blinks red)

Fill level of the fuel tank is less than 5 % of the maximum filling capacity.

LWN/LR.x/V03.01//Auslieferung/2015-06-03/en

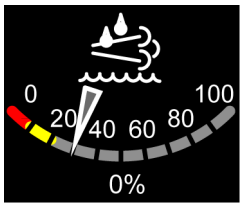

Urea solution fill level

Fill level of the urea tank as percentage of the maximum filling capacity.

Exhaust aftertreatment system (lit yellow)

Fill level of urea tank is low or error in exhaust aftertreatment system.

Exhaust aftertreatment system (blinks red)

Fill level of urea tank is too low or error in exhaust aftertreatment system.

Time

Current time.

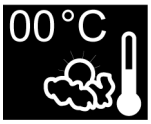

Outside temperature

Current outside temperature.

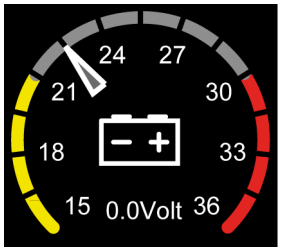

Battery voltage

Voltage of the battery.

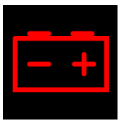

Battery charge (blinks red)

Battery is not charged.

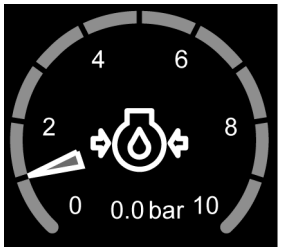

Lubrication oil pressure

Pressure of the lubrication oil of the diesel engine.

Lubrication oil pressure (lit yellow)

Pressure of the lubrication oil of the diesel engine is low.

Lubrication oil pressure (blinks red)

Pressure of the lubrication oil of the diesel engine is too low.

LWN/LR.x/V03.01//Auslieferung/2015-06-03/en

copyright by
LIEBHERR

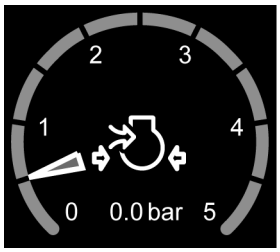

Charge air pressure

Pressure of the diesel engine charge air.

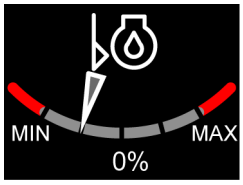

Lubrication oil fill level

Fill level of the lubrication oil of the diesel engine as percentage of the maximum filling capacity.

Lubricant fill level (lit yellow)

Fill level of diesel engine lubrication oil is low.

Lubrication oil fill level (blinks red)

Fill level of the lubrication oil of the diesel engine is too low.

Lubricant fill level (lit yellow)

Fill level of diesel engine lubrication oil is high.

Lubrication oil fill level (blinks red)

Fill level of the lubrication oil of the diesel engine is too high.

Power limitation

Power limitation of diesel engine is active due to utilization height.

Power limitation (lit yellow)

Power limitation of diesel engine is active due to an operational error.

Charge air filter (lit yellow)

Charge air filter does not work correctly.

Charge air filter (blinks red)

Charge air filter does not work correctly.

Fuel pressure (lit yellow)

Fuel pressure is low or high.

Fuel pressure (blinks red)

Fuel pressure is too low or too high.

LWN/LR.x/V03.01//Auslieferung/2015-06-03/en

copyright by
LIEBHERR

Fuel temperature (lit yellow)

Fuel temperature is high.

Fuel temperature (blinks red)

Fuel temperature is too high.

Fuel filter (blinks red)

Water in the fuel filter.

LWN/LR.x/V03.01//Auslieferung/2015-06-03/en

copyright by
LIEBHERR

3.17 *Operating hours* screen

Operating hours

Switch to the *Operating hours* screen.

The *Operating hours* screen informs the machine operator about the operating hours of the various machine components.

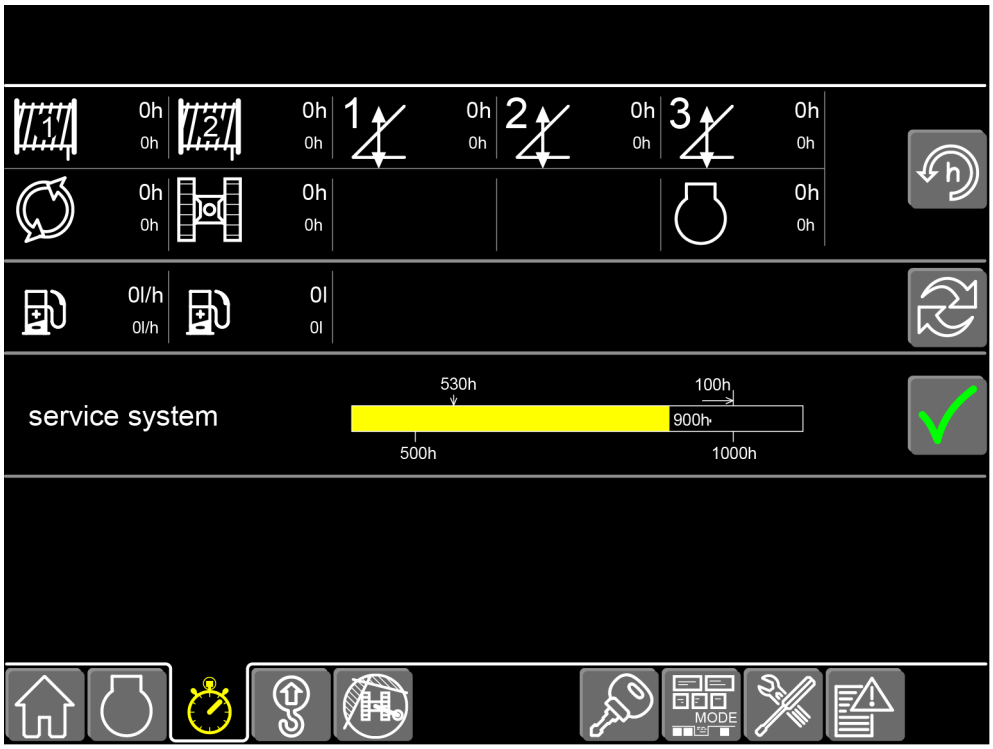

Fig. 1494: Operating hours screen

Resetting the operating hours

Reset relative operating hours to zero.

Resetting the fuel consumption

Reset the fuel consumption to zero.

Confirming the maintenance interval

Confirm completed maintenance interval.

This button is only displayed to authorized users.

Operating hours winch1

Absolute and relative operating hours of winch1.

LWN/LR.x/V03.01//Auslieferung/2015-06-03/en

Operating hours winch2

Absolute and relative operating hours of winch2.

Operating hours main boom luffing winch

Absolute and relative operating hours of the main boom luffing winch.

Operating hours jib luffing winch

Absolute and relative operating hours of the jib luffing winch.

Operating hours auxiliary winch

Absolute and relative operating hours of the auxiliary winch.

Operation hours of the derrick winch

Absolute and relative operating hours of the derrick winch.

Operating hours swing

Absolute and relative operating hours of the swing.

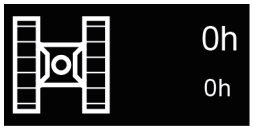

Operating hours crawler

Absolute and relative operating hours of the crawler.

Diesel engine operating hours

Absolute and relative operating hours of diesel engine.

Average fuel consumption

Absolute and relative average fuel consumption.

Total fuel consumption

Absolute and relative total fuel consumption.

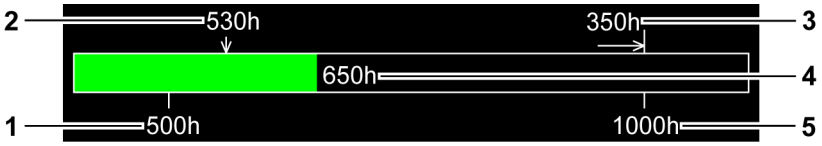

Fig. 1509: Maintenance intervals (lit green)

1 Last maintenance interval
2 Last maintenance performed
3 Operating hours until next maintenance
4 Current machine operating hours
5 Next maintenance interval

LWN/LR.x/V03.01//Auslieferung/2015-06-03/en

copyright by
LIEBHERR

Fig. 1510: Maintenance intervals - maintenance intervals pending shortly (lit yellow)

Fig. 1511: Maintenance intervals - maintenance interval past due (lit red)

LWN/LR.x/V03.01//Auslieferung/2015-06-03/en

3.18 Setup screen

Setup

Switch to the *Setup* screen.

The *Setup* screen serves to define and confirm the setup of the machine.

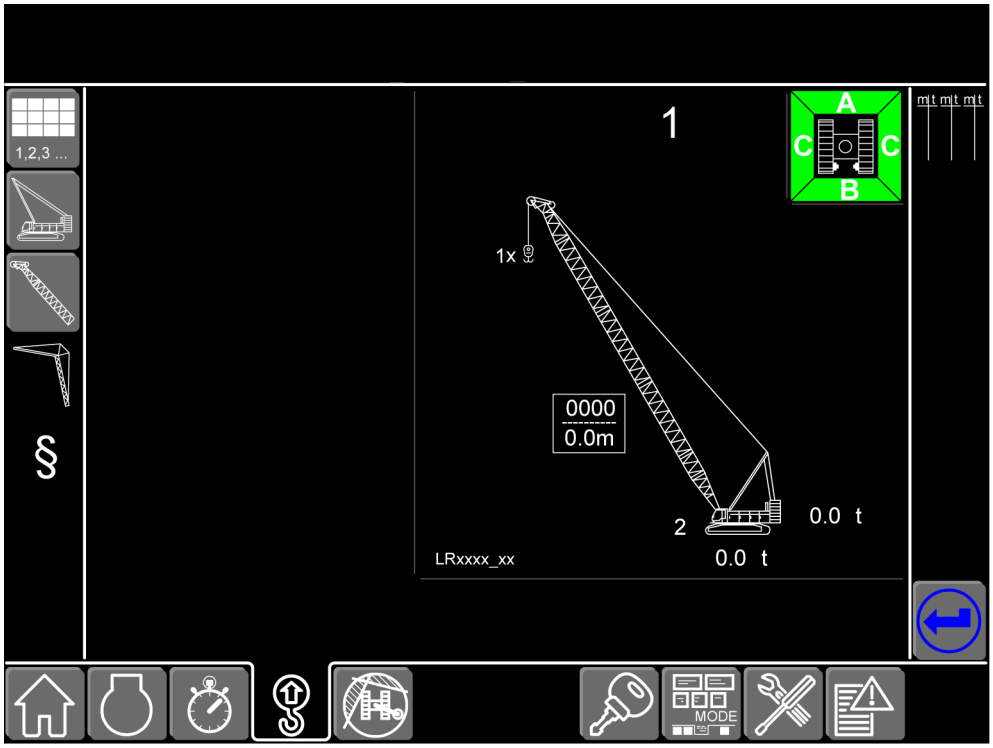

Fig. 1513: Setup screen

Boom configuration

Switch to the *Setup - boom configuration* screen.

Basic machine

Switch to the *Setup - basic machine* screen.

Main boom

Switch to the *Setup - main boom* screen.

Jib

Switch to the *Setup - jib* screen.

Calculation rules

Switch to the *Setup - calculation rules* screen.

LWN/LR.x/V03.01//Auslieferung/2015-06-03/en

copyright by
LIEBHERR

Load chart

Switch to the *Setup - load chart* screen.

Calculating load charts

Calculate load chart. No calculation required.

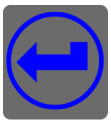

Calculate load chart) (lit blue).

Calculate load chart. Symbol is lit blue if the setup is changed and a recalculation of the load chart is required.

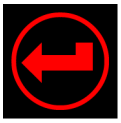

Calculate load chart (blinks red)

Calculate load chart. Symbol blinks red if the entered setup is invalid.

Calculating load charts

Calculate load chart. Symbol is crossed out if the load moment exceeds 50 % and if the recalculation of the load chart is not possible.

Hourglass

Load chart is calculated.

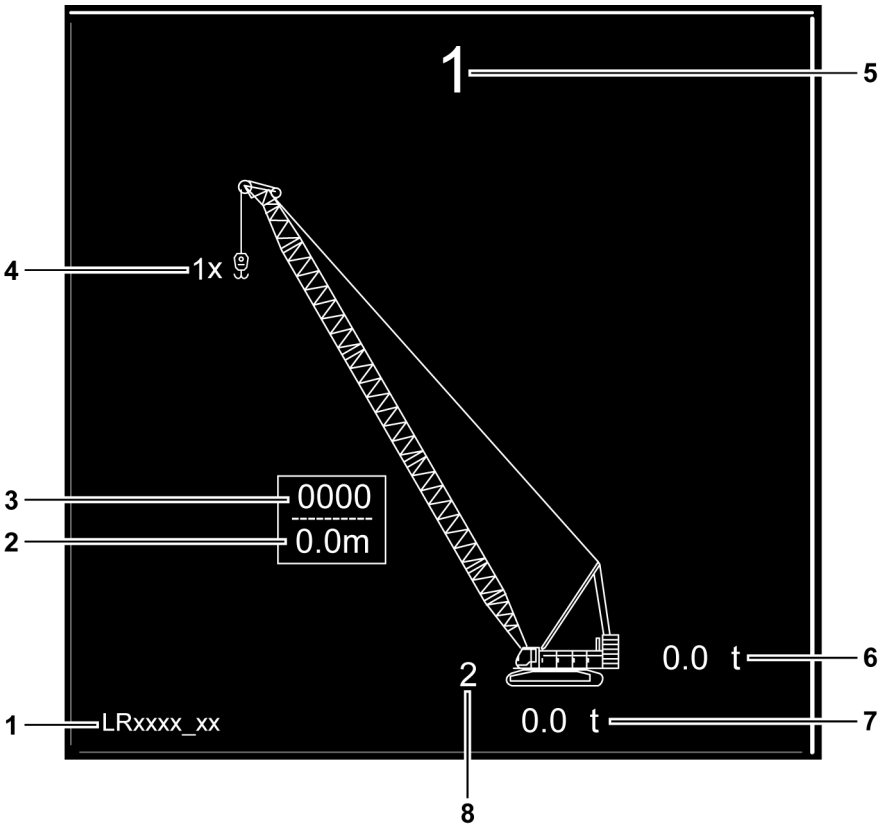

Fig. 1525: Setup screen clipping

1	Machine type	**5**	Boom configuration
2	Main boom length	**6**	Rear counterweight

See next page for continuation of the image legend

LWN/LR.x/V03.01//Auslieferung/2015-06-03/en

3	System dimension main boom	**7**	Carbody counterweight
4	Rope reeving	**8**	Track width

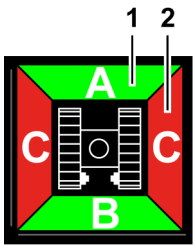

Fig. 1526: Screen clipping Erectability

1	Boom configuration can be erected (green area)	**B**	Can be erected via tumbler
2	Boom configuration cannot be erected (red area)	**C**	Can be erected across the side
A	Can be erected via idler wheel		

3.18.1 Setup - boom configuration screen

Boom configuration setup

Switch to the *Setup - boom configuration* screen.

The *Setup - boom configuration* screen serves to define and confirm the boom configuration.

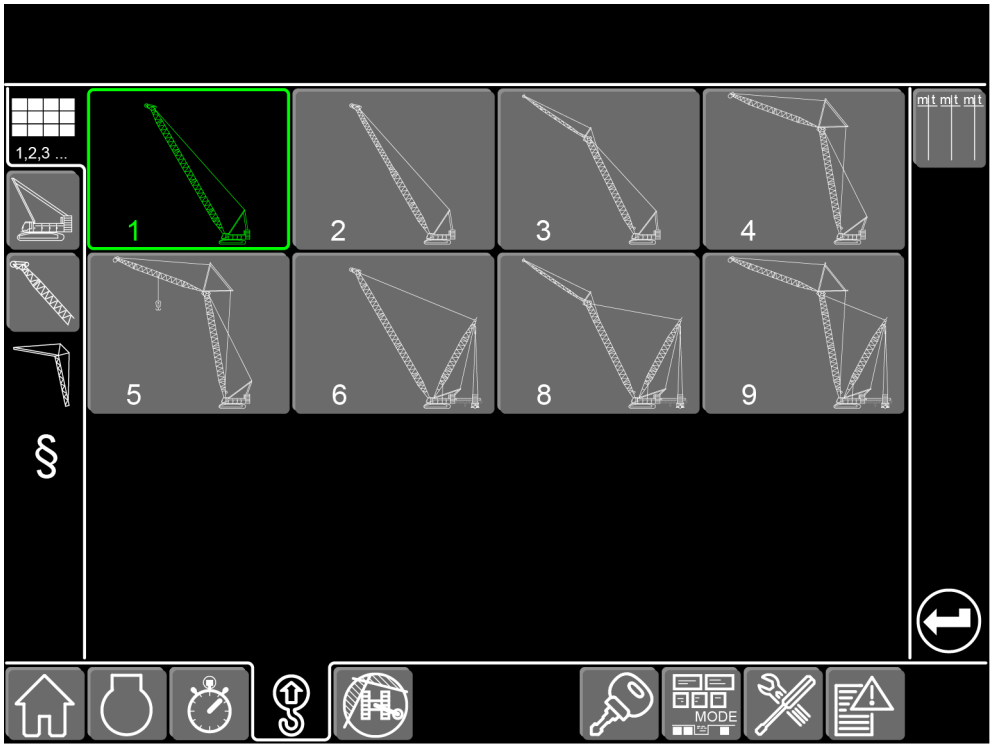

Fig. 1528: Screen Setup boom configuration

LWN/LR.x/V03.01//Auslieferung/2015-06-03/en

copyright by
LIEBHERR

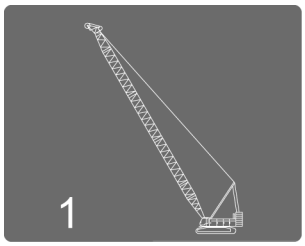

Boom configuration 1 - main boom

Select boom configuration 1 - main boom.

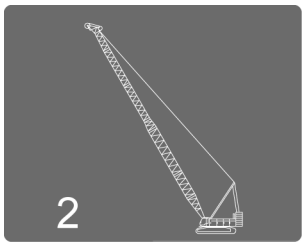

Boom configuration 2 - main boom + reducing adapter

Select boom configuration 2 - main boom + reducing adapter.

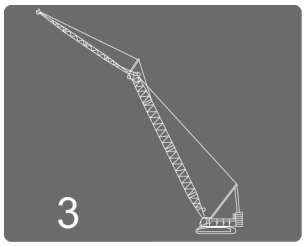

Boom configuration 3 - main boom + fixed jib

Select boom configuration 3 - main boom + fixed jib.

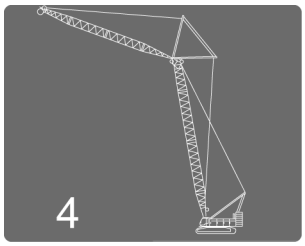

Boom configuration 4 - main boom + luffing jib

Select boom configuration 4 - main boom + luffing jib.

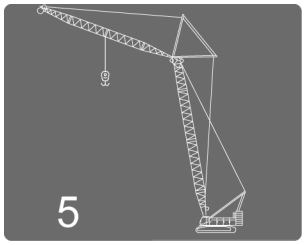

Boom configuration 5 - main boom + luffing jib + midfall

Select boom configuration 5 - main boom + luffing jib + midfall.

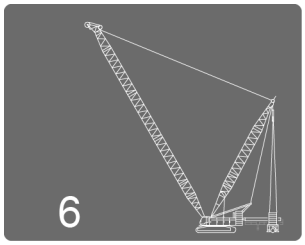

Boom configuration 6 - main boom + derrick

Select boom configuration 6 - main boom + derrick.

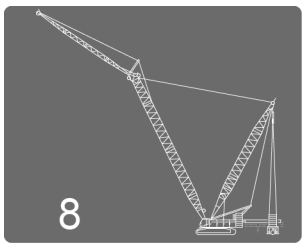

Boom configuration 8 - main boom + fixed jib + derrick

Select boom configuration 8 - main boom + fixed jib + derrick.

LWN/LR.x/V03.01//Auslieferung/2015-06-03/en

copyright by
LIEBHERR

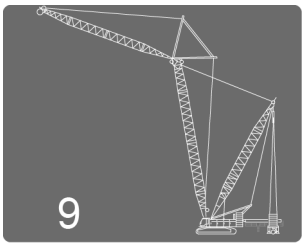

Boom configuration 9 - main boom + luffing jib + derrick

Select boom configuration 9 - main boom + luffing jib + derrick.

3.18.2 Setup - boom configuration 1 screen

Setup - basic machine screen

Setup - basic machine

Switch to the *Setup - basic machine* screen.

The *Setup - basic machine* screen serves to define and confirm the track width and counterweights.

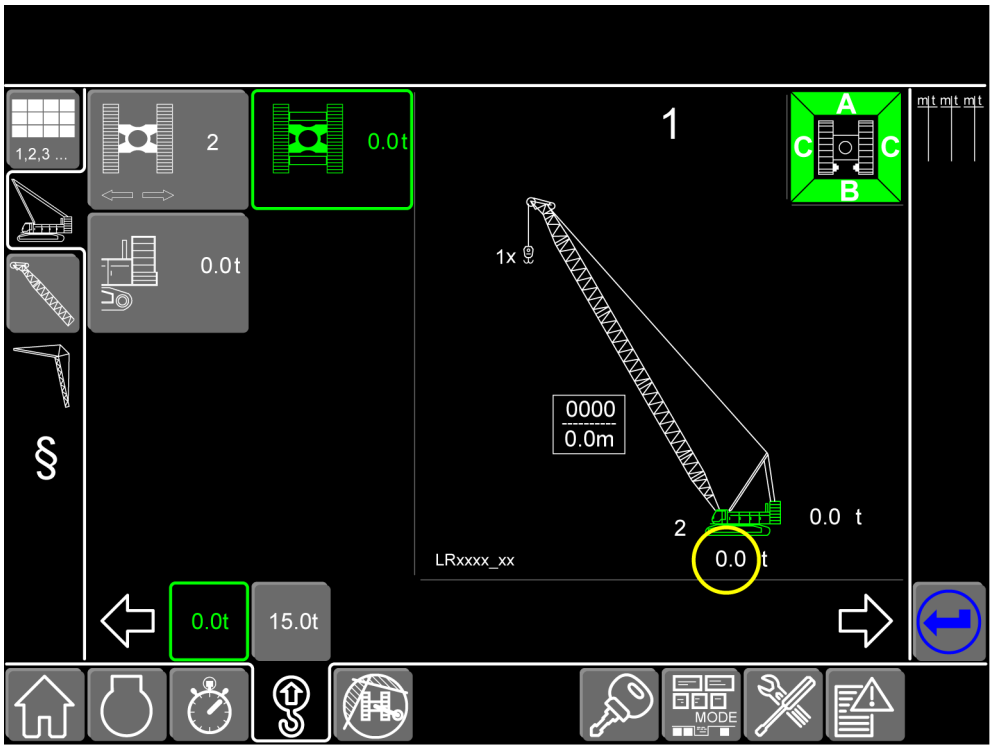

Fig. 1538: Setup - basic machine screen

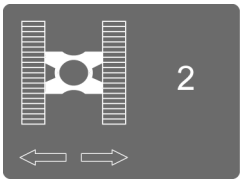

Track width

Select the track width.

- **1**: Narrow track
- **2**: Wide track
- **3**: Blocked Crawlers

LWN/LR.x/V03.01//Auslieferung/2015-06-03/en

copyright by
LIEBHERR

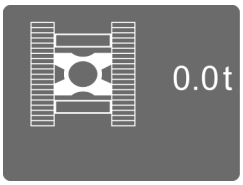

Carbody counterweight

Select the weight of carbody counterweight.

Rear counterweight

Select the weight of rear counterweight.

Smaller values

Switch to next smaller values.

Larger values

Switch to next larger values.

Value

Select value.

Setup - main boom screen

Setup - main boom

Switch to the *Setup - main boom* screen.

The *Setup - main boom* screen serves to define and confirm the main boom head, the main boom length and the reeving of the load hook.

LWN/LR.x/V03.01//Auslieferung/2015-06-03/en

copyright by
LIEBHERR

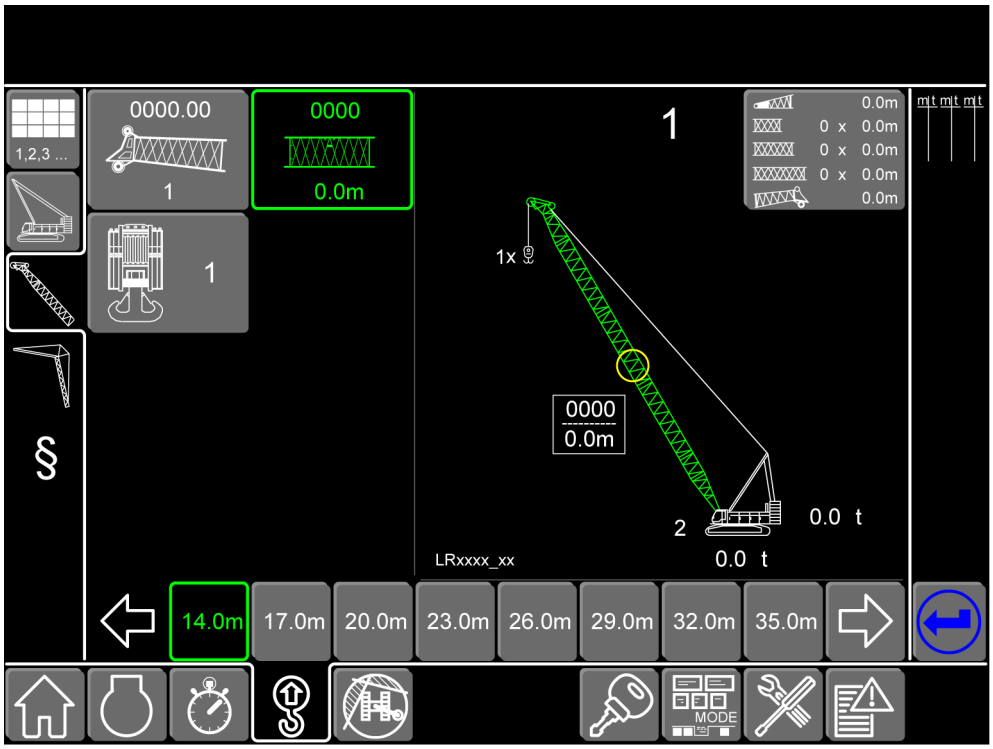

Fig. 1546: Setup - main boom screen

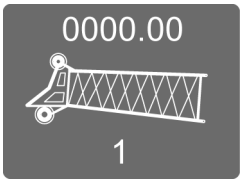

Main boom head

Select main boom head in line with foreword to the valid load chart.

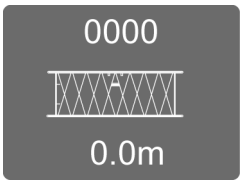

Main boom length

Select the main boom length.

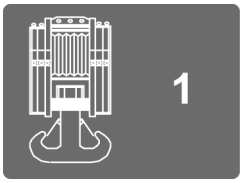

Rope reeving

Select rope reeving.

Smaller values

Switch to next smaller values.

Larger values

Switch to next larger values.

Value

Select value.

LWN/LR.x/V03.01//Auslieferung/2015-06-03/en

copyright by
LIEBHERR

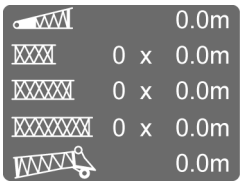

Main boom components

Button shows the composition of the main boom components and their lengths.

Switch to composition of the main boom components and their system dimensions.

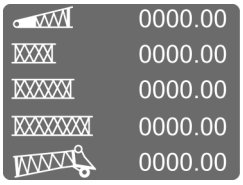

Main boom components

Button shows the composition of the main boom components and their system dimensions.

Switch to composition of the main boom components and their lengths.

3.18.3 Setup - boom configuration 2 screen

Setup - basic machine screen

Setup - basic machine

Switch to the *Setup - basic machine* screen.

The *Setup - basic machine* screen serves to define and confirm the track width and counterweights.

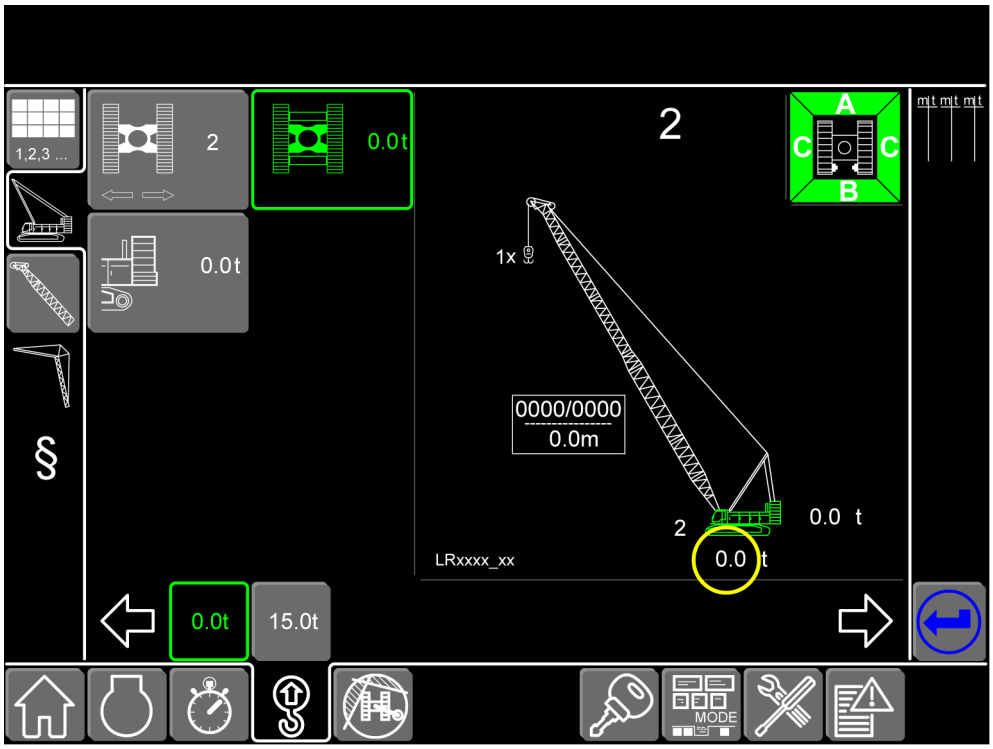

Fig. 1556: Setup - basic machine screen

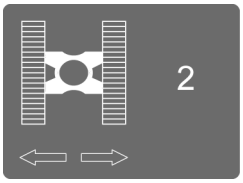

Track width

Select the track width.

- **1**: Narrow track
- **2**: Wide track
- **3**: Blocked Crawlers

LWN/LR.x/V03.01//Auslieferung/2015-06-03/en

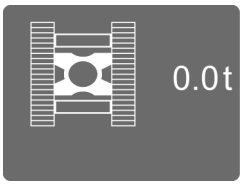

Carbody counterweight

Select the weight of carbody counterweight.

Rear counterweight

Select the weight of rear counterweight.

Smaller values

Switch to next smaller values.

Larger values

Switch to next larger values.

Value

Select value.

Setup - main boom screen

Setup - main boom

Switch to the *Setup - main boom* screen.

The *Setup - main boom* screen serves to define and confirm the main boom head, the main boom length and the reeving of the load hook.

LWN/LR.x/V03.01//Auslieferung/2015-06-03/en

copyright by
LIEBHERR

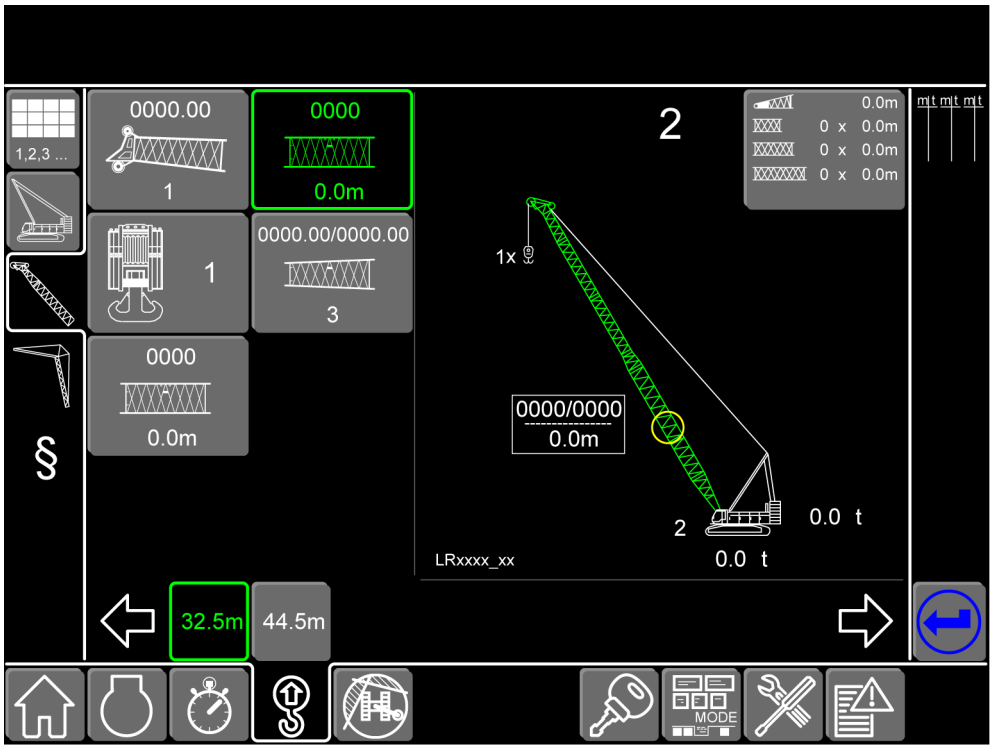

Fig. 1564: Setup - main boom screen

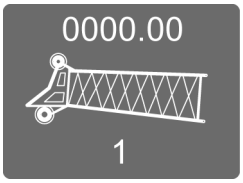

Main boom head

Select main boom head in line with foreword to the valid load chart.

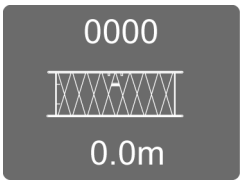

Main boom length up to reducing adapter

Select main boom length up to reducing adapter.

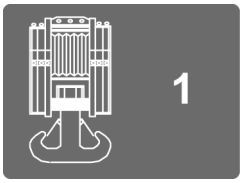

Rope reeving

Select rope reeving.

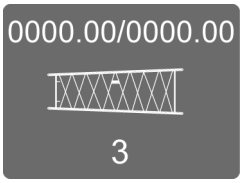

Reducing adapter

Select reducing adapter.

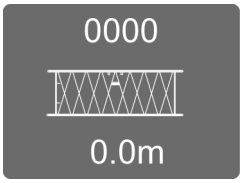

Main boom length beyond reducing adapter

Select main boom length beyond reducing adapter.

LWN/LR.x/V03.01//Auslieferung/2015-06-03/en

copyright by
LIEBHERR

Smaller values

Switch to next smaller values.

Larger values

Switch to next larger values.

Value

Select value.

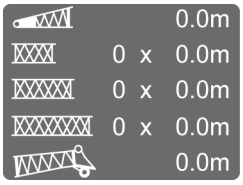

Main boom components

Button shows the composition of the main boom components and their lengths.

Switch to composition of the main boom components and their system dimensions.

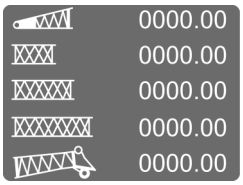

Main boom components

Button shows the composition of the main boom components and their system dimensions.

Switch to composition of the main boom components and their lengths.

3.18.4 Setup - boom configuration 3 screen

Setup - basic machine screen

Setup - basic machine

Switch to the *Setup - basic machine* screen.

The *Setup - basic machine* screen serves to define and confirm the track width and counterweights.

LWN/LR.x/V03.01//Auslieferung/2015-06-03/en

copyright by
LIEBHERR

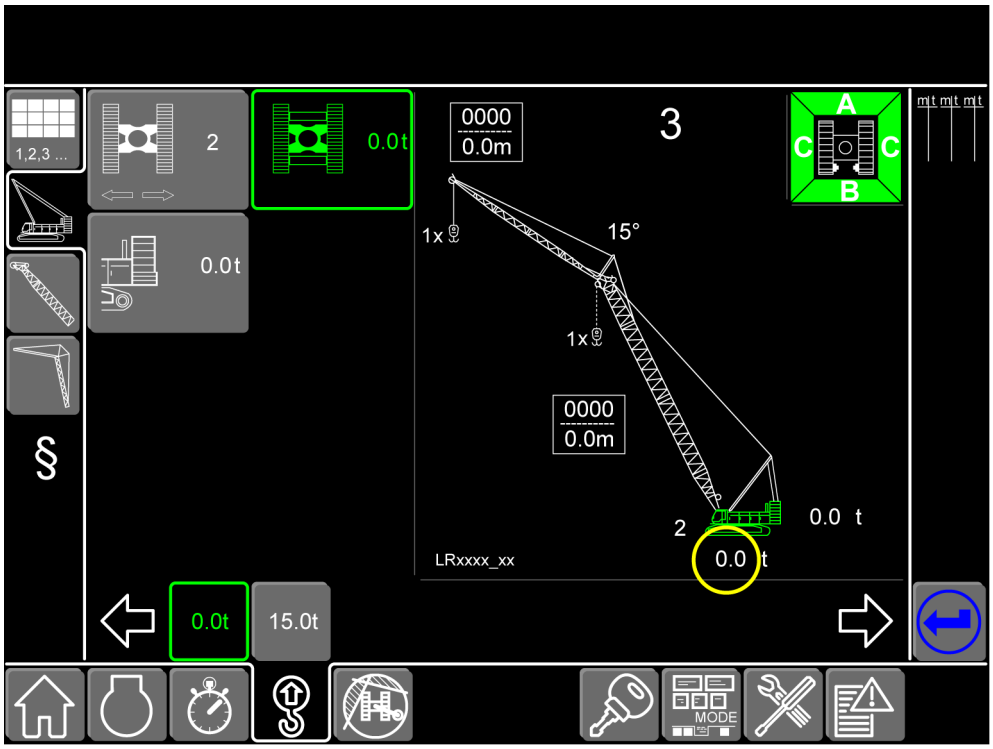

Fig. 1576: Setup - basic machine screen

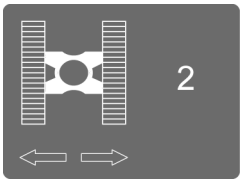

Track width

Select the track width.

- **1**: Narrow track
- **2**: Wide track
- **3**: Blocked Crawlers

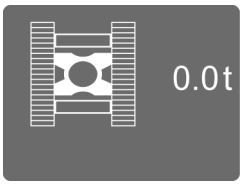

Carbody counterweight

Select the weight of carbody counterweight.

Rear counterweight

Select the weight of rear counterweight.

Smaller values

Switch to next smaller values.

Larger values

Switch to next larger values.

Value

Select value.

LWN/LR.x/V03.01//Auslieferung/2015-06-03/en

Setup - main boom screen

Setup - main boom

Switch to the *Setup - main boom* screen.

The *Setup - main boom* screen serves to define and confirm the main boom head, the main boom length and the reeving of the load hook.

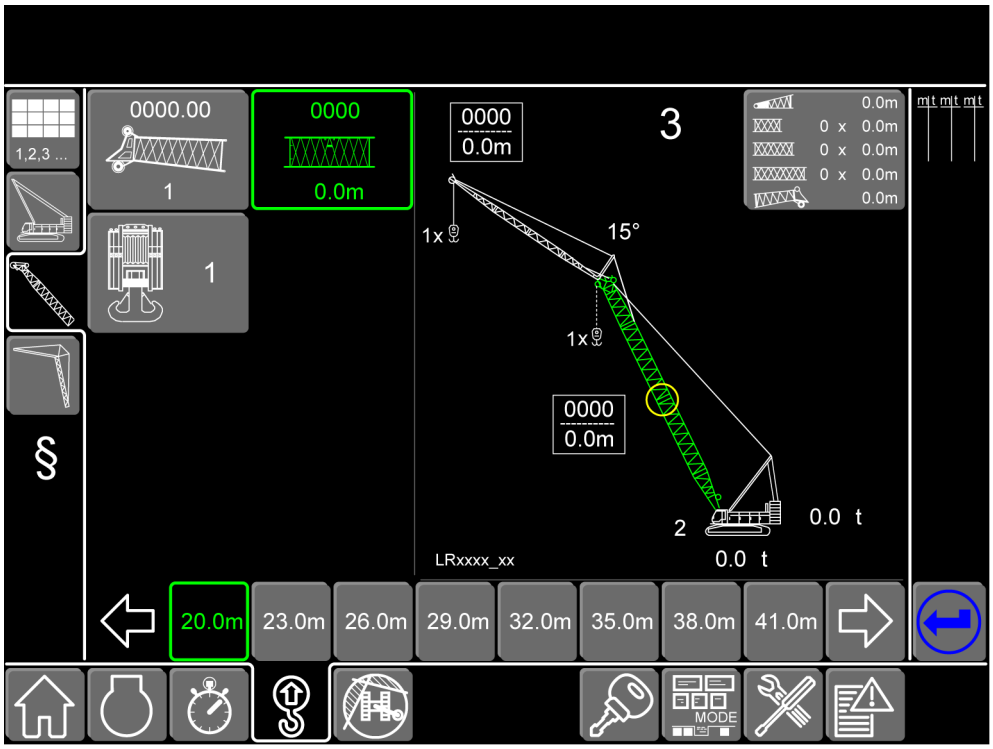

Fig. 1584: Setup - main boom screen

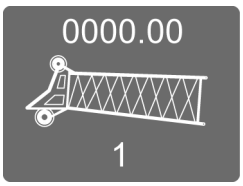

Main boom head

Select main boom head in line with foreword to the valid load chart.

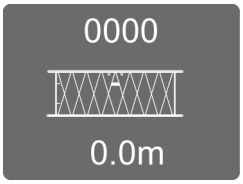

Main boom length

Select the main boom length.

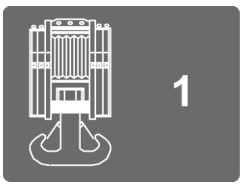

Rope reeving

Select rope reeving.

Smaller values

Switch to next smaller values.

LWN/LR.x/V03.01//Auslieferung/2015-06-03/en

copyright by
LIEBHERR

Larger values

Switch to next larger values.

Value

Select value.

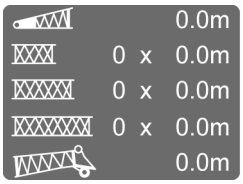

Main boom components

Button shows the composition of the main boom components and their lengths.

Switch to composition of the main boom components and their system dimensions.

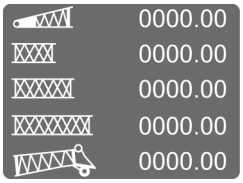

Main boom components

Button shows the composition of the main boom components and their system dimensions.

Switch to composition of the main boom components and their lengths.

Setup - jib screen

Setup - jib

Switch to the *Setup - jib* screen.

The *Setup - jib* screen serves to define and confirm the jib head, the jib length and the reeving of the load hook.

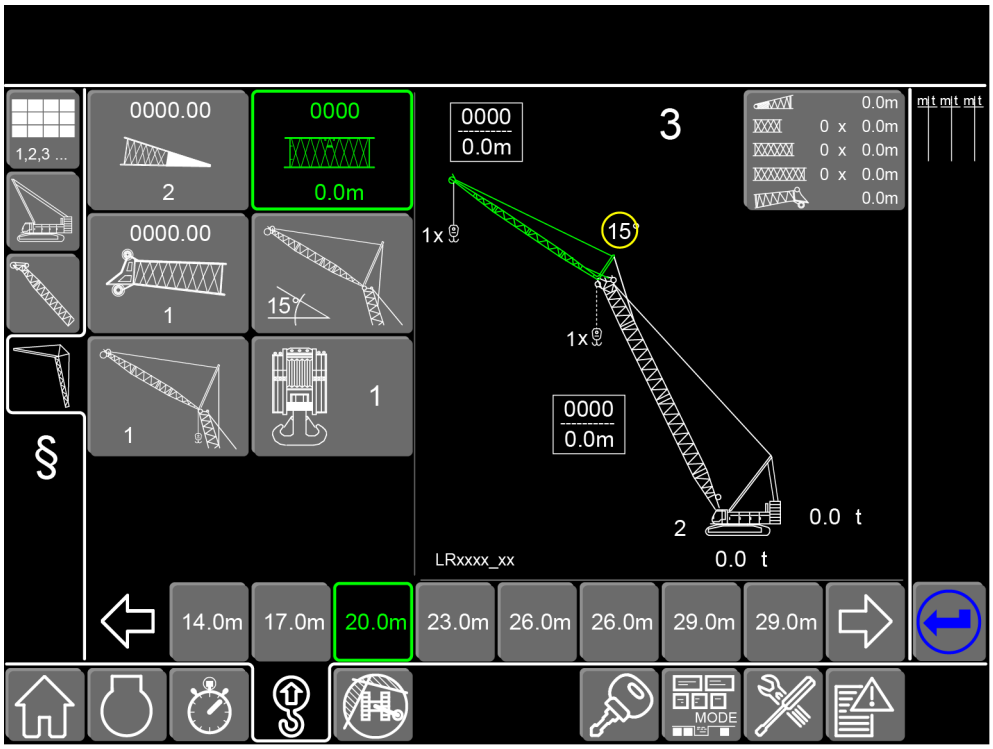

Fig. 1594: Setup - jib screen

LWN/LR.x/V03.01//Auslieferung/2015-06-03/en

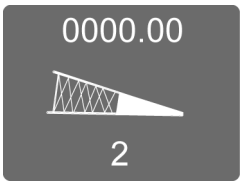

System dimension of the jib

Select system dimension of the jib.

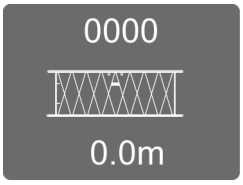

Jib length

Select jib length.

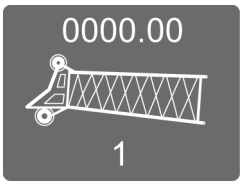

Jib head

Select jib head in line with foreword to the valid load chart.

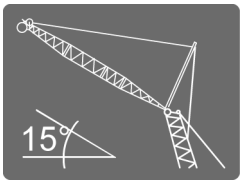

Tensioning position

Select tensioning position between jib and main boom in degrees.

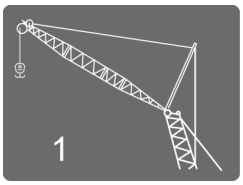

Load position

Select load position.

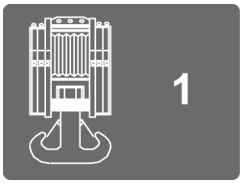

Rope reeving

Select rope reeving.

Smaller values

Switch to next smaller values.

Larger values

Switch to next larger values.

Value

Select value.

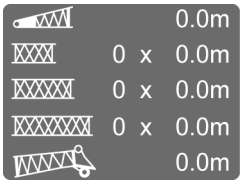

Jib components

Button shows the composition of the jib components and their lengths.

Switch to composition of the jib components and their system dimensions.

LWN/LR.x/V03.01//Auslieferung/2015-06-03/en

copyright by
LIEBHERR

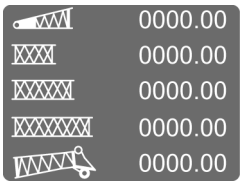

Jib components

Button shows the composition of the jib components and their system dimensions.

Switch to composition of the jib components and their lengths.

3.18.5 Setup - boom configuration 4 screen

Setup - basic machine screen

Setup - basic machine

Switch to the *Setup - basic machine* screen.

The *Setup - basic machine* screen serves to define and confirm the track width and counterweights.

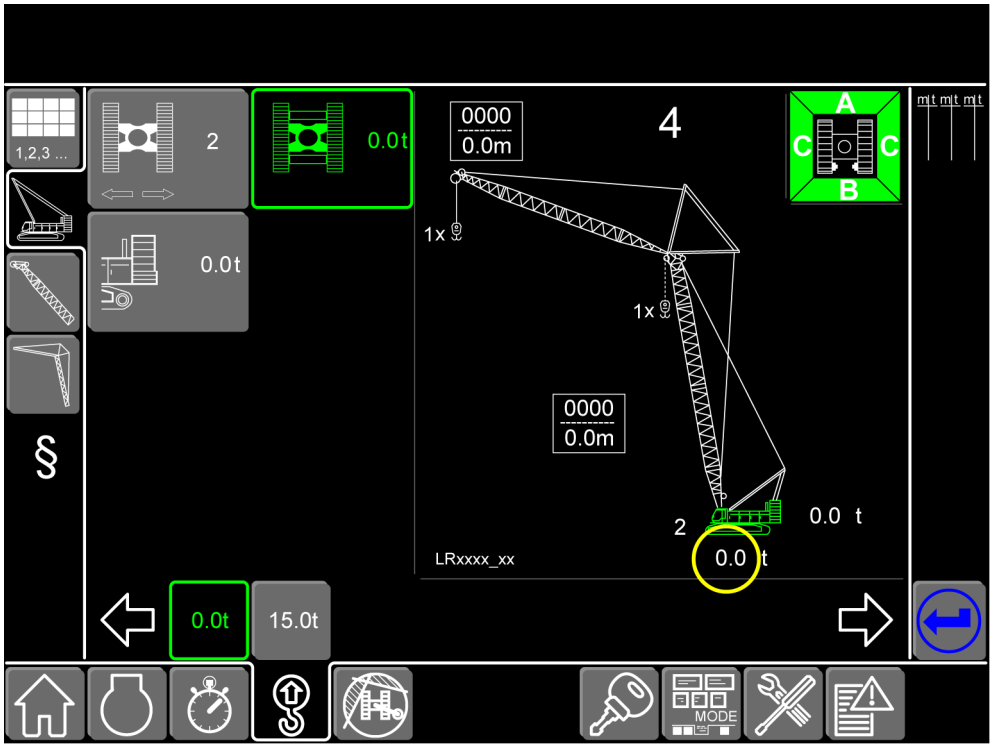

Fig. 1607: Setup - basic machine screen

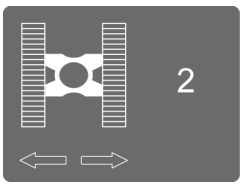

Track width

Select the track width.

- **1**: Narrow track
- **2**: Wide track
- **3**: Blocked Crawlers

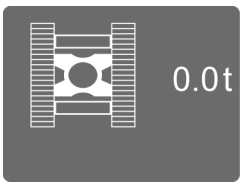

Carbody counterweight

Select the weight of carbody counterweight.

LWN/LR.x/V03.01//Auslieferung/2015-06-03/en

Rear counterweight

Select the weight of rear counterweight.

Smaller values

Switch to next smaller values.

Larger values

Switch to next larger values.

Value

Select value.

Setup - main boom screen

Setup - main boom

Switch to the *Setup - main boom* screen.

The *Setup - main boom* screen serves to define and confirm the main boom head, the main boom length and the reeving of the load hook.

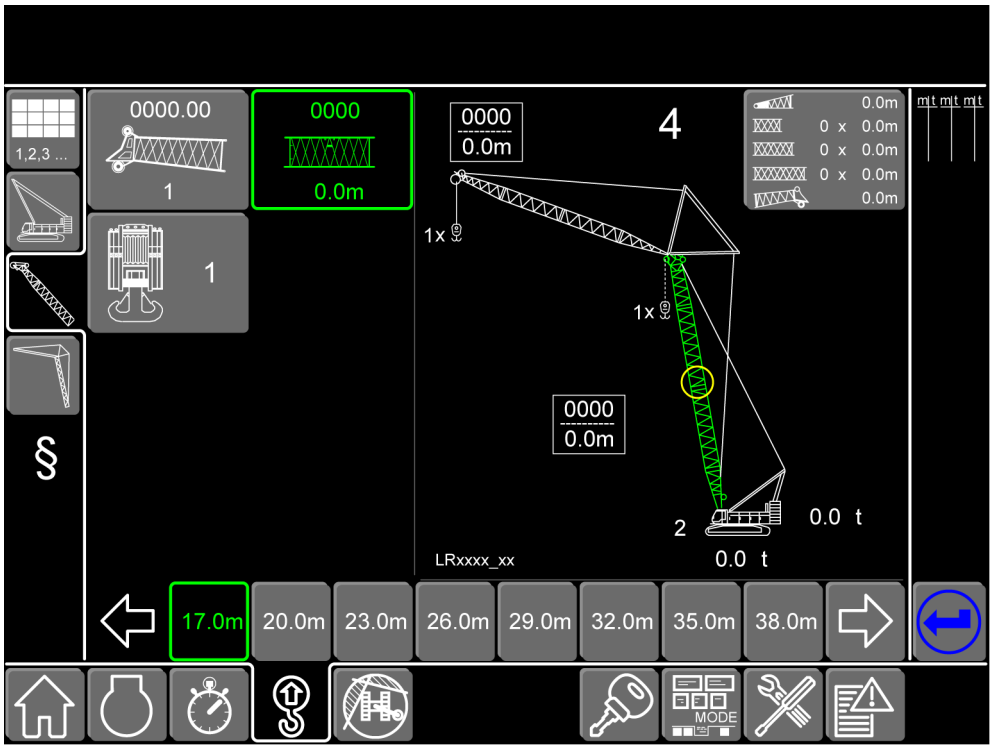

Fig. 1615: Setup - main boom screen

LWN/LR.x/V03.01//Auslieferung/2015-06-03/en

copyright by
LIEBHERR

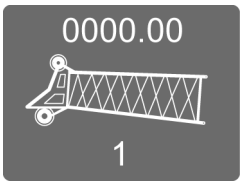

Main boom head

Select main boom head in line with foreword to the valid load chart.

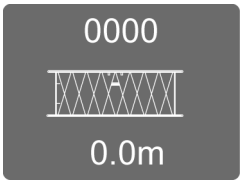

Main boom length

Select the main boom length.

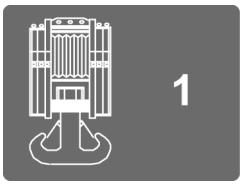

Rope reeving

Select rope reeving.

Smaller values

Switch to next smaller values.

Larger values

Switch to next larger values.

Value

Select value.

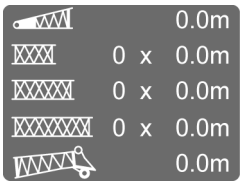

Main boom components

Button shows the composition of the main boom components and their lengths.

Switch to composition of the main boom components and their system dimensions.

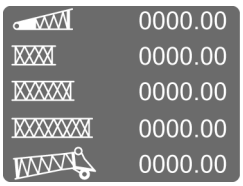

Main boom components

Button shows the composition of the main boom components and their system dimensions.

Switch to composition of the main boom components and their lengths.

Setup - jib screen

Setup - jib

Switch to the *Setup - jib* screen.

The *Setup - jib* screen serves to define and confirm the jib head, the jib length and the reeving of the load hook.

LWN/LR.x/V03.01//Auslieferung/2015-06-03/en

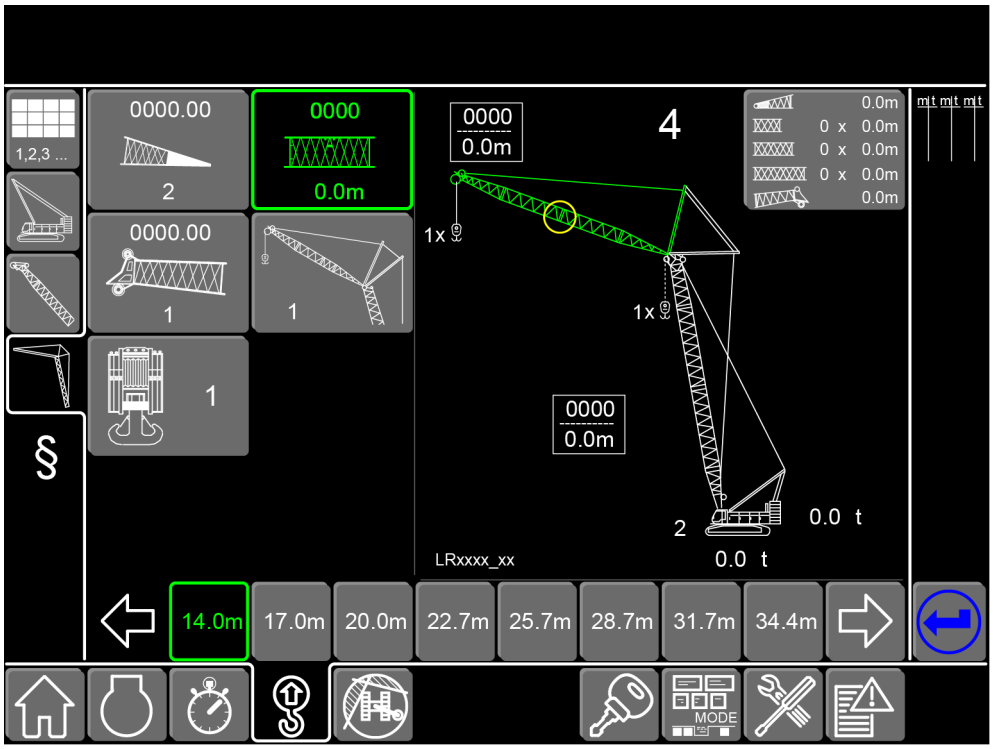

Fig. 1625: Setup - jib screen

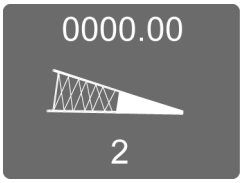

System dimension of the jib

Select system dimension of the jib.

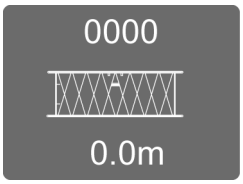

Jib length

Select jib length.

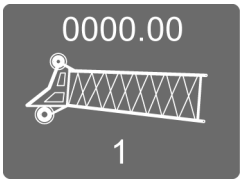

Jib head

Select jib head in line with foreword to the valid load chart.

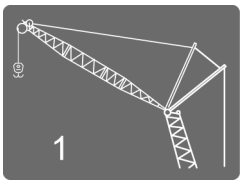

Load position

Select load position.

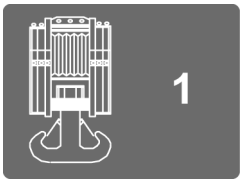

Rope reeving

Select rope reeving.

LWN/LR.x/V03.01//Auslieferung/2015-06-03/en

copyright by
LIEBHERR

Smaller values

Switch to next smaller values.

Larger values

Switch to next larger values.

Value

Select value.

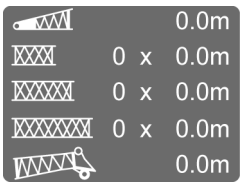

Jib components

Button shows the composition of the jib components and their lengths.

Switch to composition of the jib components and their system dimensions.

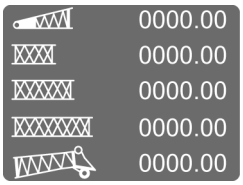

Jib components

Button shows the composition of the jib components and their system dimensions.

Switch to composition of the jib components and their lengths.

3.18.6 Setup - boom configuration 5 screen

Setup - basic machine screen

Setup - basic machine

Switch to the *Setup - basic machine* screen.

The *Setup - basic machine* screen serves to define and confirm the track width and counterweights.

LWN/LR.x/V03.01//Auslieferung/2015-06-03/en

copyright by
LIEBHERR

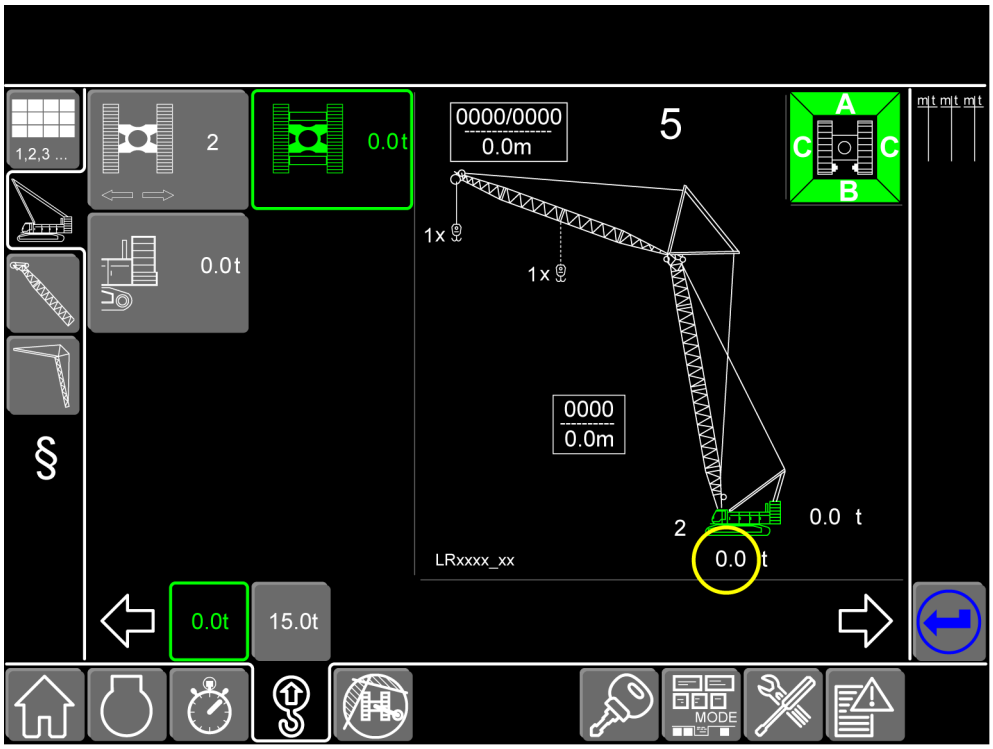

Fig. 1637: Setup - basic machine screen

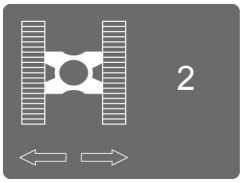

Track width

Select the track width.

– **1**: Narrow track
– **2**: Wide track
– **3**: Blocked Crawlers

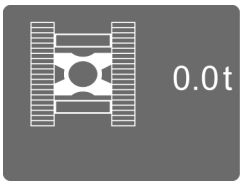

Carbody counterweight

Select the weight of carbody counterweight.

Rear counterweight

Select the weight of rear counterweight.

Smaller values

Switch to next smaller values.

Larger values

Switch to next larger values.

Value

Select value.

LWN/LR.x/V03.01//Auslieferung/2015-06-03/en

copyright by
LIEBHERR

Setup - main boom screen

Setup - main boom

Switch to the *Setup - main boom* screen.

The *Setup - main boom* screen serves to define and confirm the main boom head, the main boom length and the reeving of the load hook.

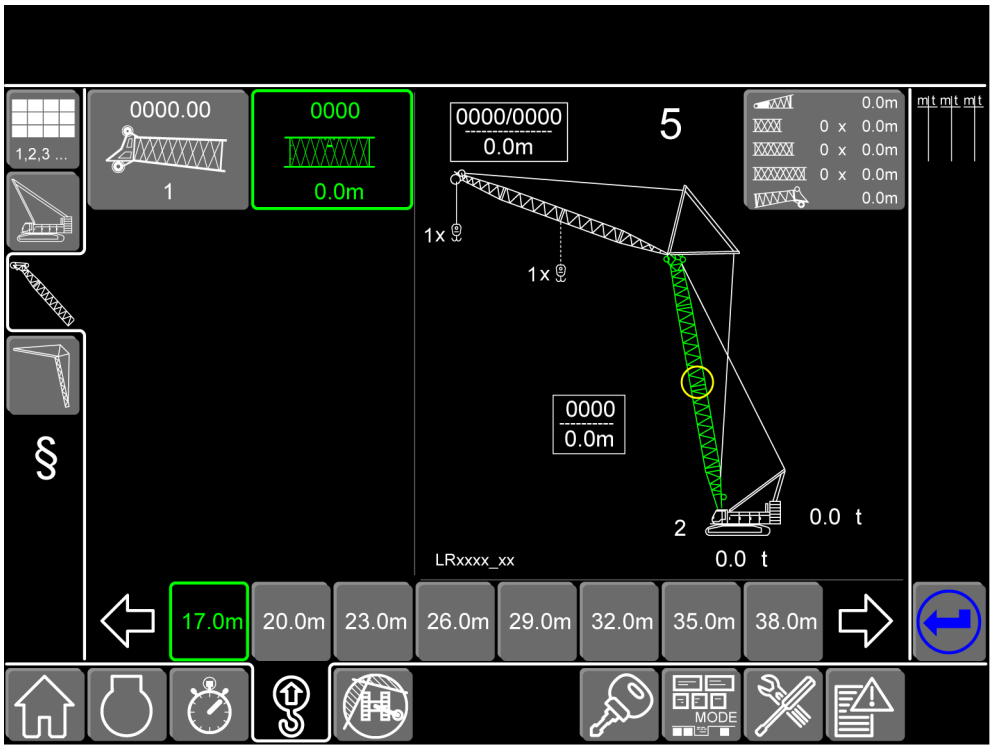

Fig. 1645: Setup - main boom screen

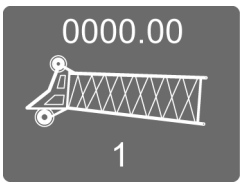

Main boom head

Select main boom head in line with foreword to the valid load chart.

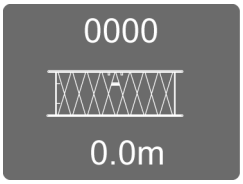

Main boom length

Select the main boom length.

Smaller values

Switch to next smaller values.

Larger values

Switch to next larger values.

LWN/LR.x/V03.01//Auslieferung/2015-06-03/en

Value

Select value.

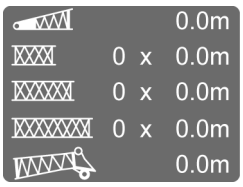

Main boom components

Button shows the composition of the main boom components and their lengths.

Switch to composition of the main boom components and their system dimensions.

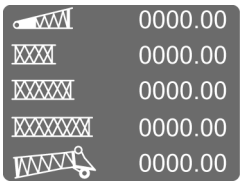

Main boom components

Button shows the composition of the main boom components and their system dimensions.

Switch to composition of the main boom components and their lengths.

Setup - jib screen

Setup - jib

Switch to the *Setup - jib* screen.

The *Setup - jib* screen serves to define and confirm the jib head, the jib length and the reeving of the load hook.

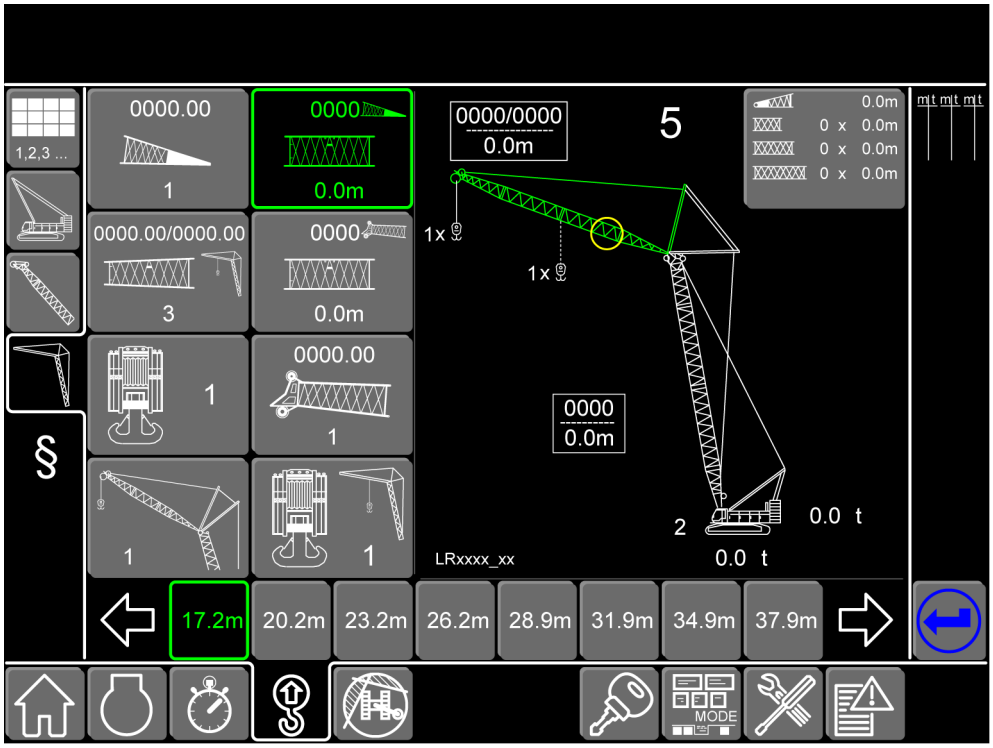

Fig. 1654: Setup - jib screen

LWN/LR.x/V03.01//Auslieferung/2015-06-03/en

copyright by
LIEBHERR

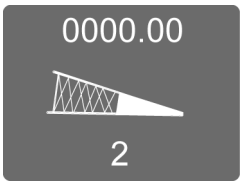

System dimension of the jib

Select system dimension of the jib.

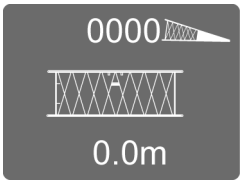

Jib length up to Midfall

Select jib length up to midfall.

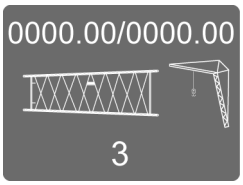

Midfall

Select midfall. The control system displays the midfall as a reducing adapter.

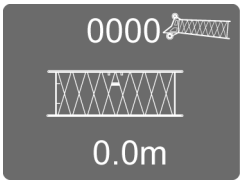

Jib length after midfall

Select jib length after midfall.

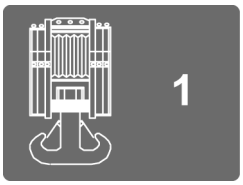

Rope reeving

Select rope reeving.

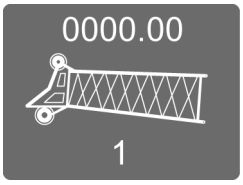

Jib head

Select jib head in line with foreword to the valid load chart.

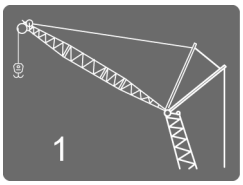

Load position

Select load position.

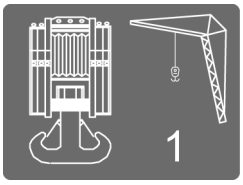

Reeving midfall

Select reeving of midfall.

Smaller values

Switch to next smaller values.

LWN/LR.x/V03.01//Auslieferung/2015-06-03/en

copyright by
LIEBHERR

Larger values

Switch to next larger values.

Value

Select value.

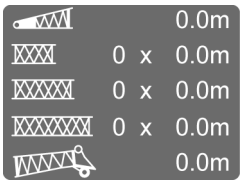

Jib components

Button shows the composition of the jib components and their lengths.

Switch to composition of the jib components and their system dimensions.

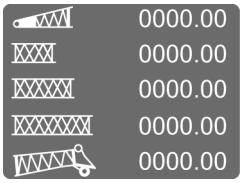

Jib components

Button shows the composition of the jib components and their system dimensions.

Switch to composition of the jib components and their lengths.

3.18.7 Setup screen - boom configuration 6

Setup - basic machine screen

Setup - basic machine

Switch to the *Setup - basic machine* screen.

The *Setup - basic machine* screen serves to define and confirm the track width and counterweights.

LWN/LR.x/V03.01//Auslieferung/2015-06-03/en

copyright by
LIEBHERR

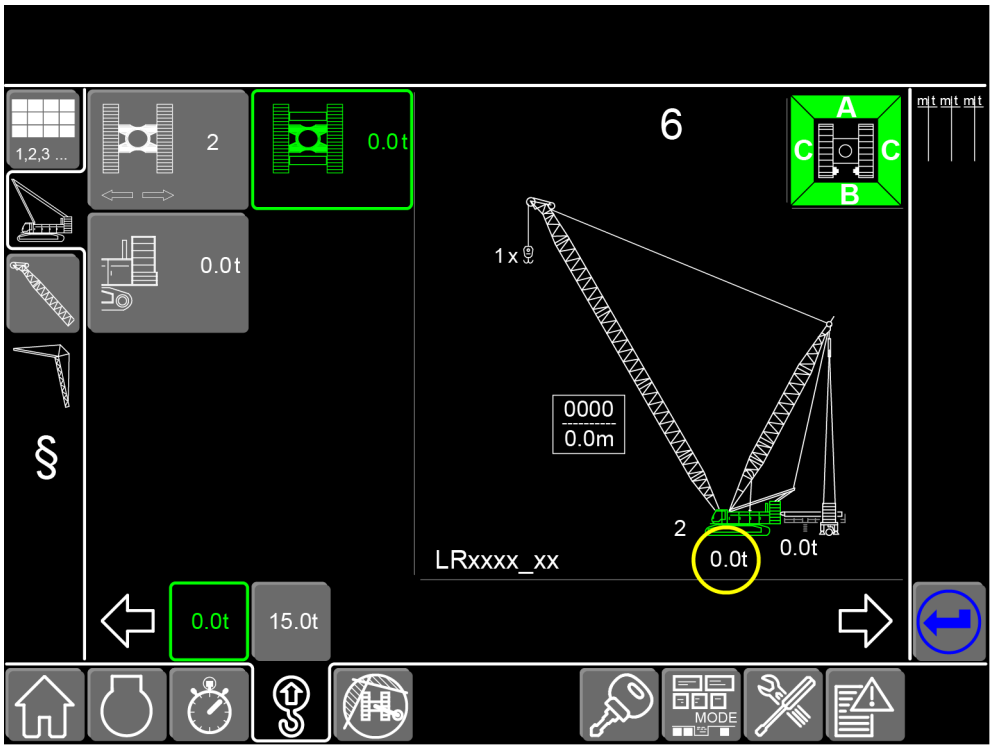

Fig. 1669: Screen Setup - basic machine

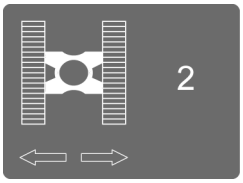

Track width

Select the track width.

- **1**: Narrow track
- **2**: Wide track
- **3**: Blocked Crawlers

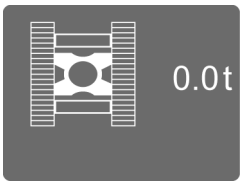

Carbody counterweight

Select the weight of carbody counterweight.

Rear counterweight

Select the weight of rear counterweight.

Smaller values

Switch to next smaller values.

Larger values

Switch to next larger values.

Value

Select value.

LWN/LR.x/V03.01//Auslieferung/2015-06-03/en

Setup - main boom screen

Setup - main boom

Switch to the *Setup - main boom* screen.

The *Setup - main boom* screen serves to define and confirm the main boom head, the main boom length and the reeving of the load hook.

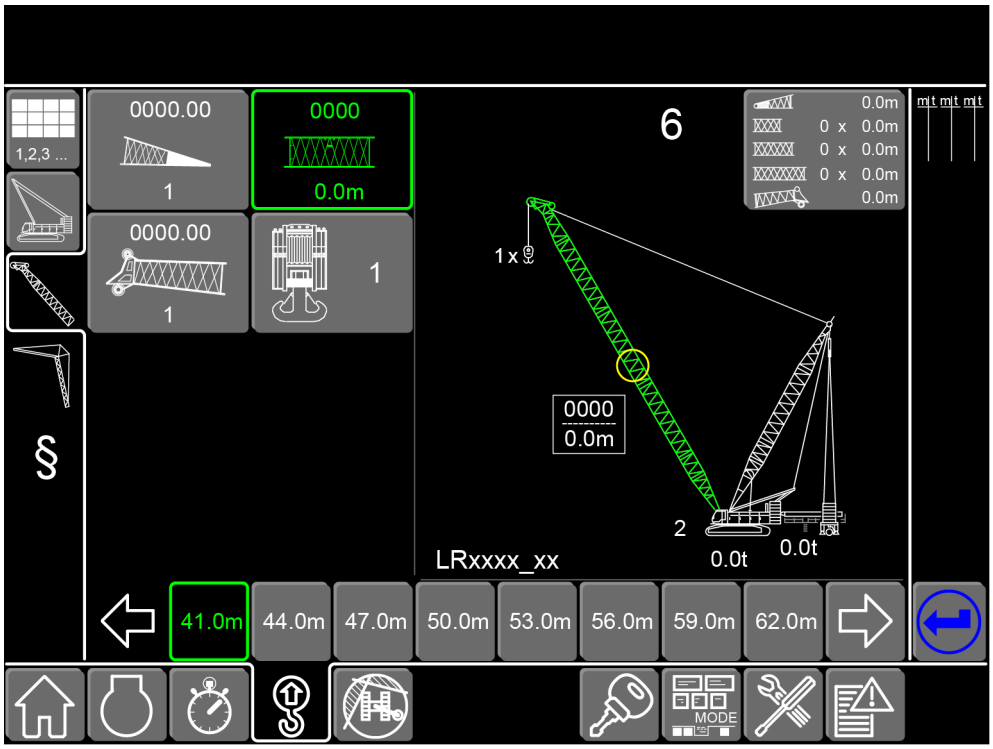

Fig. 1677: Setup - main boom screen

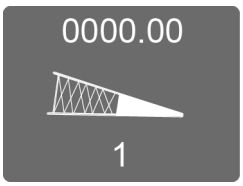

Main boom system dimension

Select main boom system dimension.

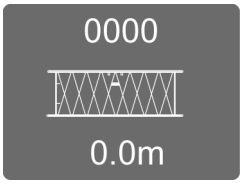

Main boom length

Select the main boom length.

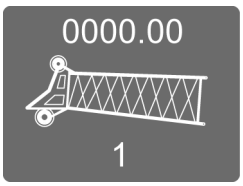

Main boom head

Select main boom head in line with foreword to the valid load chart.

LWN/LR.x/V03.01//Auslieferung/2015-06-03/en

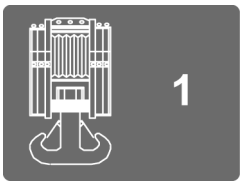

Rope reeving

Select rope reeving.

Smaller values

Switch to next smaller values.

Larger values

Switch to next larger values.

Value

Select value.

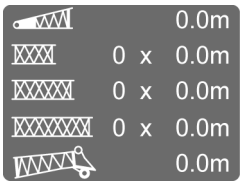

Main boom components

Button shows the composition of the main boom components and their lengths.

Switch to composition of the main boom components and their system dimensions.

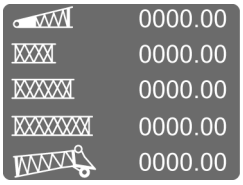

Main boom components

Button shows the composition of the main boom components and their system dimensions.

Switch to composition of the main boom components and their lengths.

3.18.8 Setup screen - boom configuration 8

Screen Setup - basic machine

Setup - basic machine

Switch to *Setup - basic machine* screen.

The screen *Setup - basic machine* serves to define and confirm the track width and counterweights.

LWN/LR.x/V03.01//Auslieferung/2015-06-03/en

copyright by
LIEBHERR

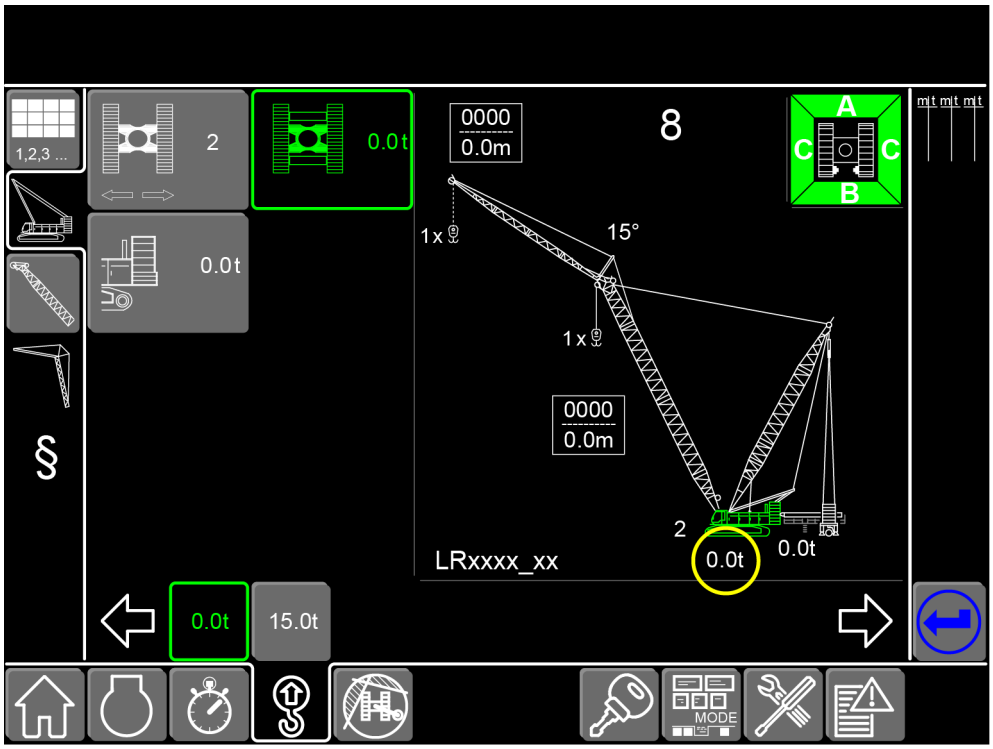

Fig. 1688: Screen Setup - basic machine

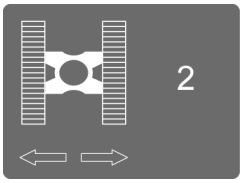

Track width

Select track width.

– **1**: Narrow track
– **2**: Wide track
– **3**: Blocked crawlers

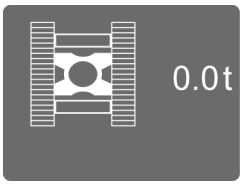

Carbody counterweight

Select weight of carbody counterweight.

Rear counterweight

Select weight of rear counterweight.

Smaller values

Switch to next smaller values.

Larger values

Switch to next larger values.

Value

Select value.

LWN/LR.x/V03.01//Auslieferung/2015-06-03/en

copyright by
LIEBHERR

Screen Setup - main boom

Setup - main boom

Switch to *Setup - main boom* screen.

The screen *Setup - main boom* serves to define and confirm the main boom head, the main boom length and the reeving of the hook.

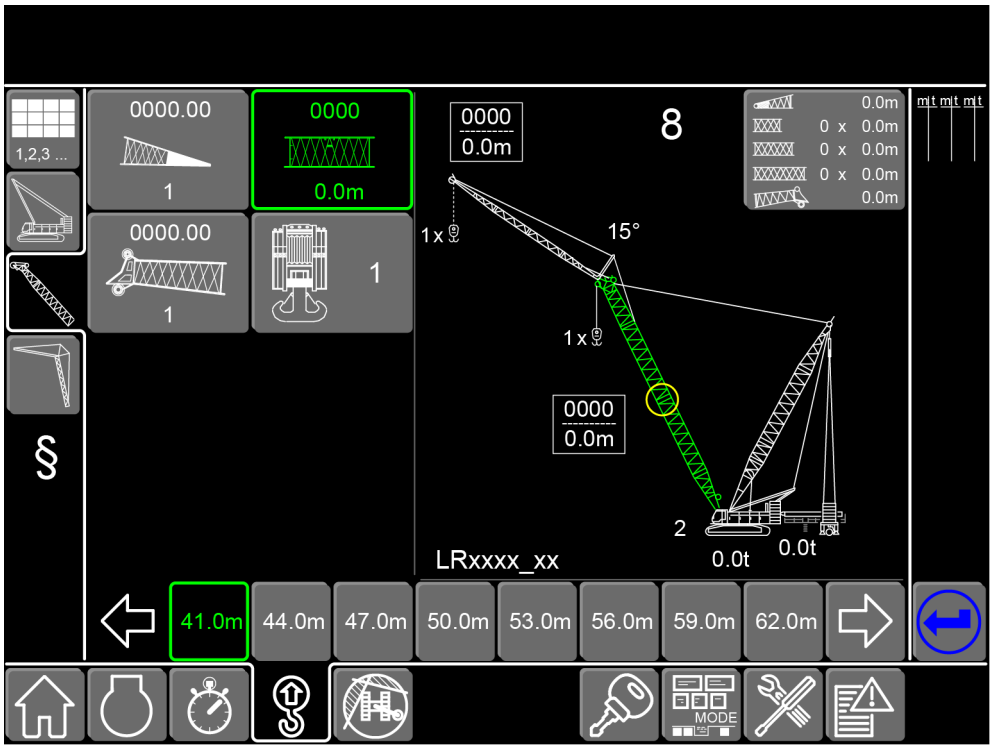

Fig. 1696: Screen Setup - main boom

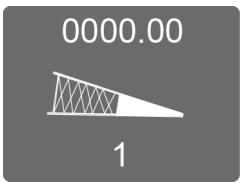

Main boom system dimension

Select main boom system dimension.

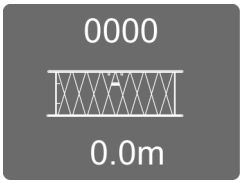

Main boom length

Select main boom length.

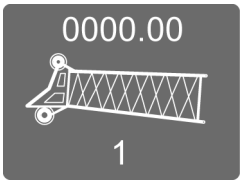

Main boom head

Select main boom head in line with foreword to the valid load chart.

LWN/LR.x/V03.01//Auslieferung/2015-06-03/en

copyright by
LIEBHERR

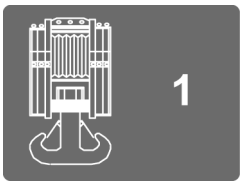

Rope reeving

Select rope reeving.

Smaller values

Switch to next smaller values.

Larger values

Switch to next larger values.

Value

Select value.

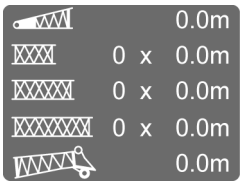

Main boom components

Button shows the composition of the main boom components and their lengths.

Switch to composition of the main boom components and their system dimensions.

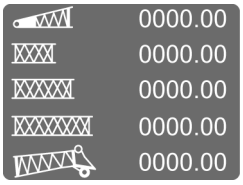

Main boom components

Button shows the composition of the main boom components and their system dimensions.

Switch to composition of the main boom components and their lengths.

Setup - jib screen

Setup - jib

Switch to the *Setup - jib* screen.

The *Setup - jib* screen serves to define and confirm the jib head, the jib length and the reeving of the load hook.

LWN/LR.x/V03.01//Auslieferung/2015-06-03/en

copyright by
LIEBHERR

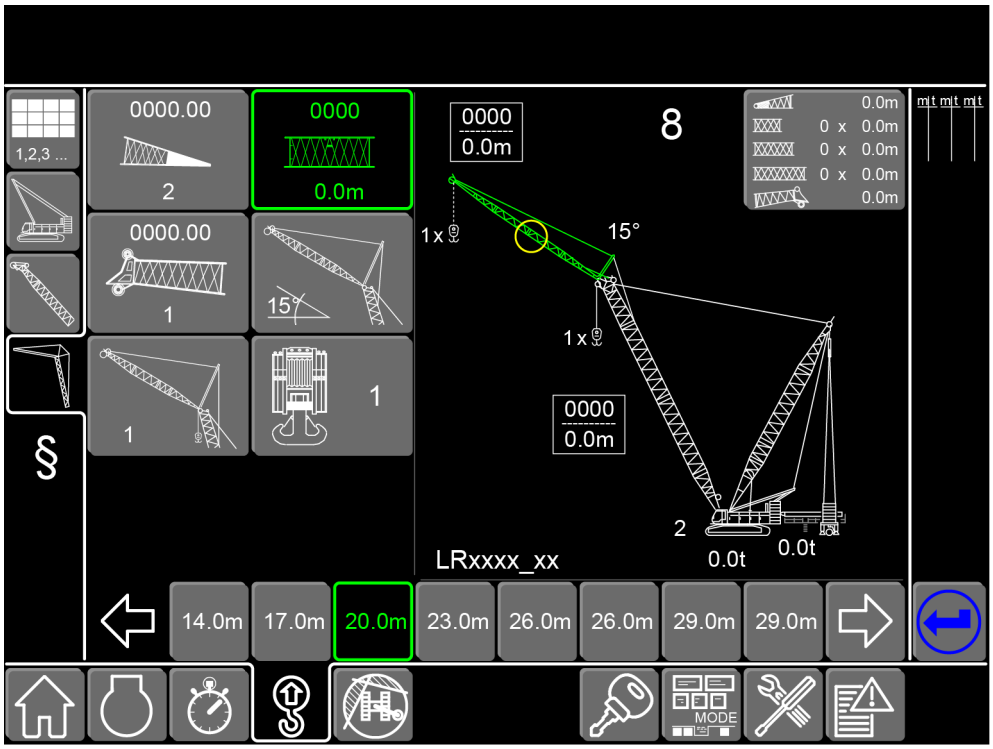

Fig. 1707: Screen Setup - jib

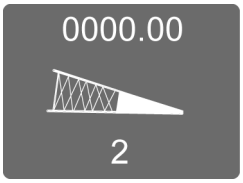

System dimension of the jib

Select system dimension of the jib.

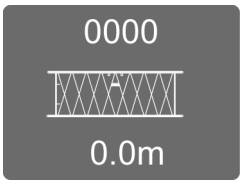

Jib length

Select jib length.

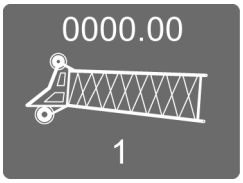

Jib head

Select jib head in line with foreword to the valid load chart.

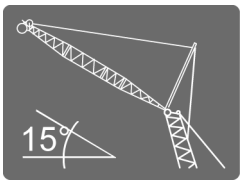

Tensioning position

Select tensioning position between jib and main boom in degrees.

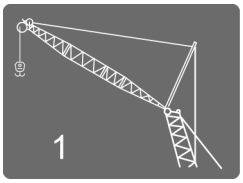

Load position

Select load position.

LWN/LR.x/V03.01//Auslieferung/2015-06-03/en

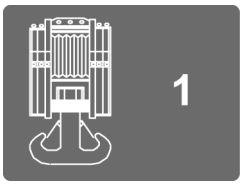

Rope reeving

Select rope reeving.

Smaller values

Switch to next smaller values.

Larger values

Switch to next larger values.

Value

Select value.

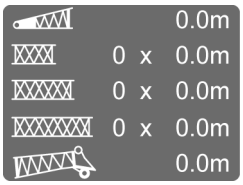

Jib components

Button shows the composition of the jib components and their lengths.

Switch to composition of the jib components and their system dimensions.

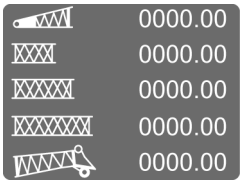

Jib components

Button shows the composition of the jib components and their system dimensions.

Switch to composition of the jib components and their lengths.

3.18.9 Setup screen - boom configuration 9

Screen Setup - basic machine

Setup - basic machine

Switch to *Setup - basic machine* screen.

The screen *Setup - basic machine* serves to define and confirm the track width and counterweights.

LWN/LR.x/V03.01//Auslieferung/2015-06-03/en

copyright by
LIEBHERR

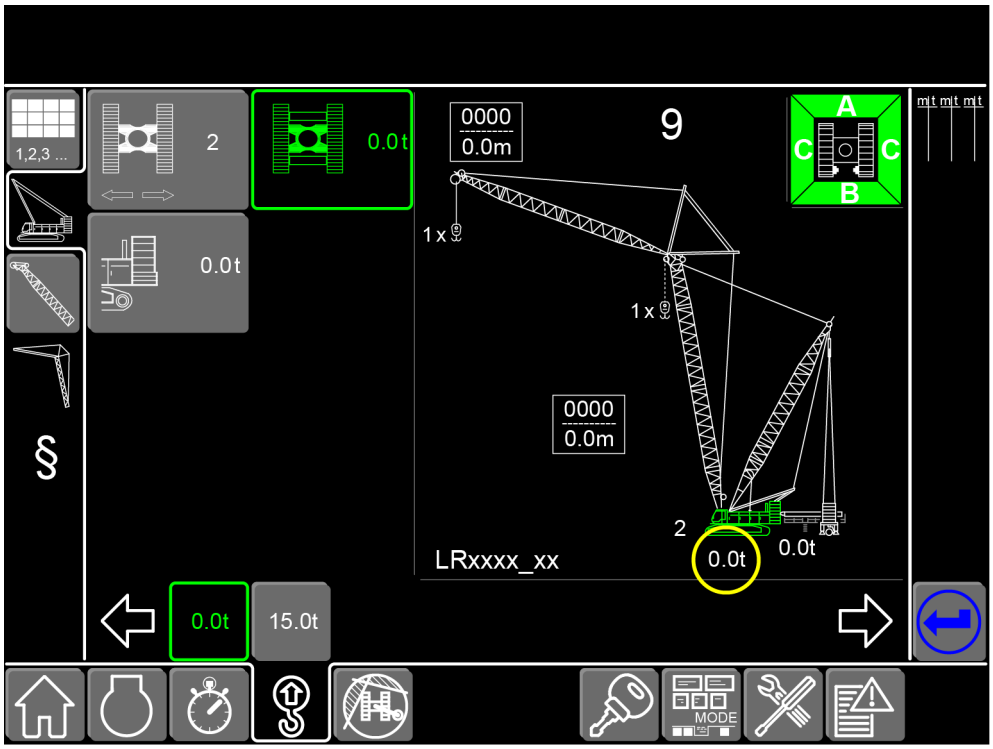

Fig. 1720: Screen Setup - basic machine

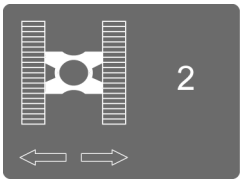

Track width

Select track width.

- **1**: Narrow track
- **2**: Wide track
- **3**: Blocked crawlers

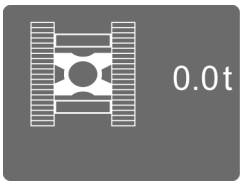

Carbody counterweight

Select weight of carbody counterweight.

Rear counterweight

Select weight of rear counterweight.

Smaller values

Switch to next smaller values.

Larger values

Switch to next larger values.

Value

Select value.

LWN/LR.x/V03.01//Auslieferung/2015-06-03/en

Screen Setup - main boom

Setup - main boom

Switch to *Setup - main boom* screen.

The screen *Setup - main boom* serves to define and confirm the main boom head, the main boom length and the reeving of the hook.

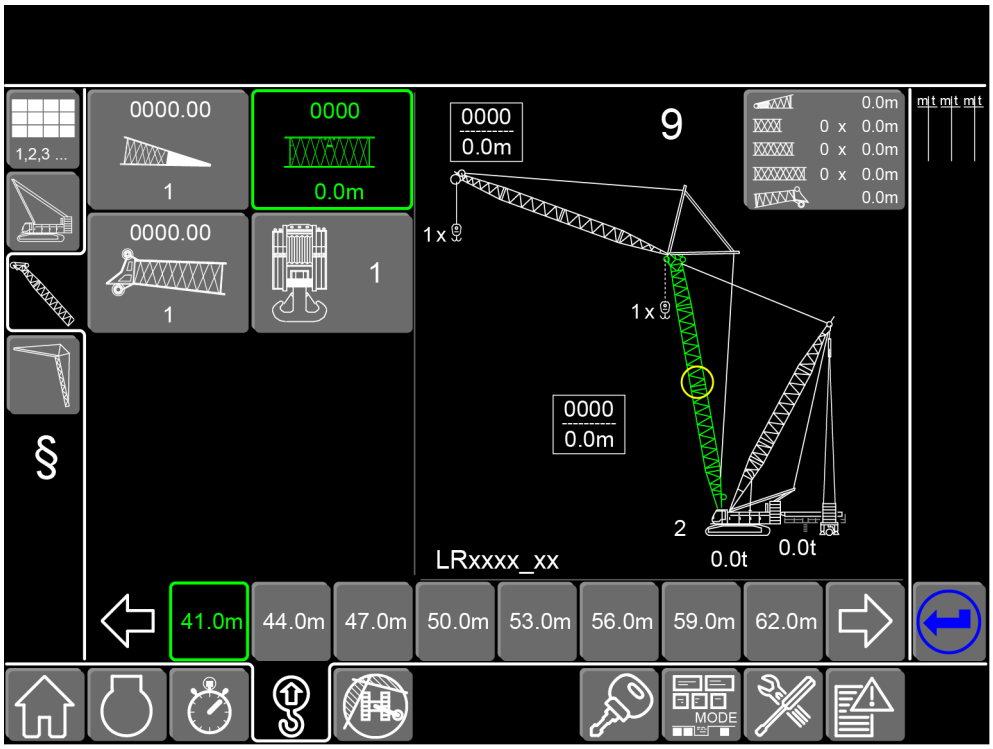

Fig. 1728: Screen Setup - main boom

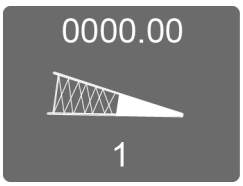

Main boom system dimension

Select main boom system dimension.

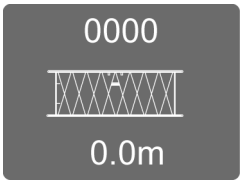

Main boom length

Select main boom length.

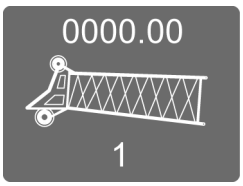

Main boom head

Select main boom head in line with foreword to the valid load chart.

LWN/LR.x/V03.01//Auslieferung/2015-06-03/en

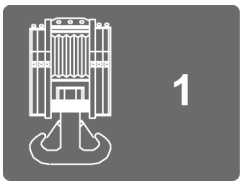

Rope reeving

Select rope reeving.

Smaller values

Switch to next smaller values.

Larger values

Switch to next larger values.

Value

Select value.

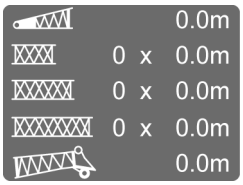

Main boom components

Button shows the composition of the main boom components and their lengths.

Switch to composition of the main boom components and their system dimensions.

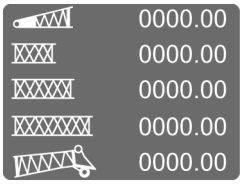

Main boom components

Button shows the composition of the main boom components and their system dimensions.

Switch to composition of the main boom components and their lengths.

Setup - jib screen

Setup - jib

Switch to the *Setup - jib* screen.

The *Setup - jib* screen serves to define and confirm the jib head, the jib length and the reeving of the load hook.

LWN/LR.x/V03.01//Auslieferung/2015-06-03/en

copyright by
LIEBHERR

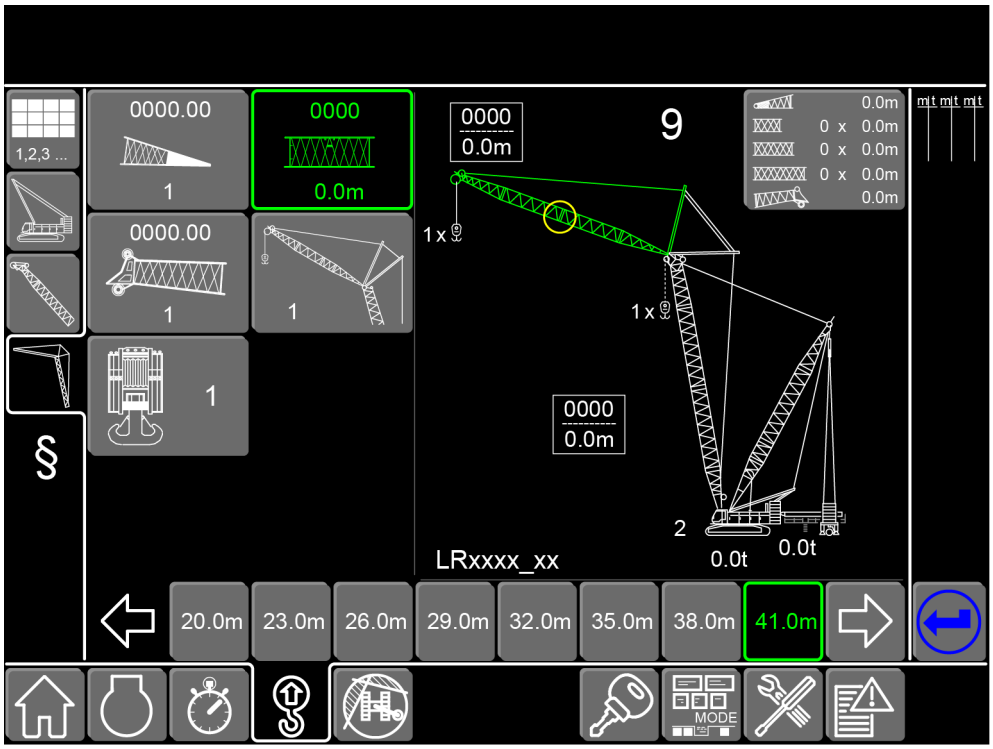

Fig. 1739: Screen Setup - jib

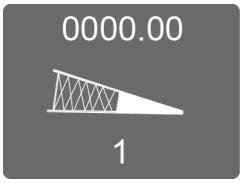

System dimension of the jib

Select system dimension of the jib.

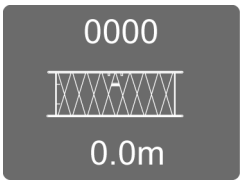

Jib length

Select jib length.

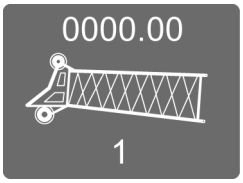

Jib head

Select jib head in line with foreword to the valid load chart.

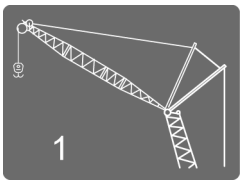

Load position

Select load position.

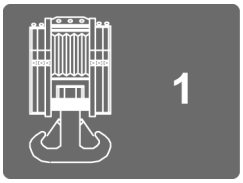

Rope reeving

Select rope reeving.

LWN/LR.x/V03.01//Auslieferung/2015-06-03/en

copyright by
LIEBHERR

Smaller values

Switch to next smaller values.

Larger values

Switch to next larger values.

Value

Select value.

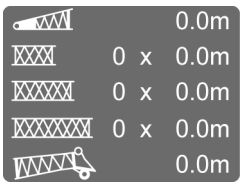

Jib components

Button shows the composition of the jib components and their lengths.

Switch to composition of the jib components and their system dimensions.

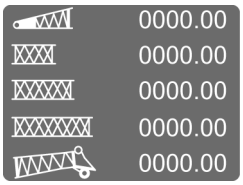

Jib components

Button shows the composition of the jib components and their system dimensions.

Switch to composition of the jib components and their lengths.

3.18.10 Setup - load chart screen

Switch to the *Setup - load chart* screen.

The *Setup - load chart* screen shows the radius and corresponding lifting capacity for the programmed setup.

LWN/LR.x/V03.01//Auslieferung/2015-06-03/en

copyright by
LIEBHERR

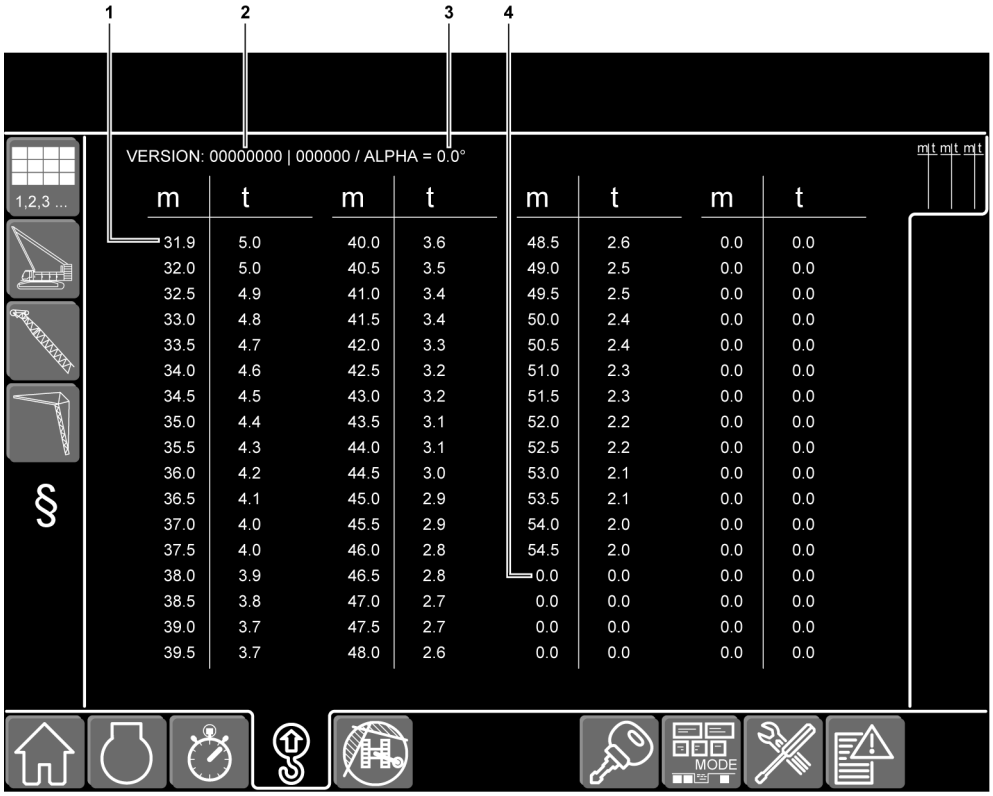

m	t	m	t	m	t	m	t
31.9	5.0	40.0	3.6	48.5	2.6	0.0	0.0
32.0	5.0	40.5	3.5	49.0	2.5	0.0	0.0
32.5	4.9	41.0	3.4	49.5	2.5	0.0	0.0
33.0	4.8	41.5	3.4	50.0	2.4	0.0	0.0
33.5	4.7	42.0	3.3	50.5	2.4	0.0	0.0
34.0	4.6	42.5	3.2	51.0	2.3	0.0	0.0
34.5	4.5	43.0	3.2	51.5	2.3	0.0	0.0
35.0	4.4	43.5	3.1	52.0	2.2	0.0	0.0
35.5	4.3	44.0	3.1	52.5	2.2	0.0	0.0
36.0	4.2	44.5	3.0	53.0	2.1	0.0	0.0
36.5	4.1	45.0	2.9	53.5	2.1	0.0	0.0
37.0	4.0	45.5	2.9	54.0	2.0	0.0	0.0
37.5	4.0	46.0	2.8	54.5	2.0	0.0	0.0
38.0	3.9	46.5	2.8	0.0	0.0	0.0	0.0
38.5	3.8	47.0	2.7	0.0	0.0	0.0	0.0
39.0	3.7	47.5	2.7	0.0	0.0	0.0	0.0
39.5	3.7	48.0	2.6	0.0	0.0	0.0	0.0

Fig. 1751: Setup - load chart screen

1 Value of the smallest radius

2 Load chart version

3 Main boom angle alpha or differential angle gamma

4 Invalid values

The value of the smallest radius is specified exactly. All other values are rounded to whole numbers.

Invalid values are listed in the table with a 0.0

Gamma is the calculated difference in angle between main boom angle Alpha and jib angle Beta.

LWN/LR.x/V03.01//Auslieferung/2015-06-03/en

copyright by
LIEBHERR

3.19 Screen *Working range limitation*

Working range limitation

Switch to the *Working range limitation* screen.

3.19.1 Screen *Working range limitation - working range limitation*

Working range limitation - working range limitation

Switch to the *Working range limitation - working range limitation* screen.

The *Working range limitation - working range limitation* screen provides settings for limiting the working range of the swing and the booms of the machine. The working range limitations are programed by approaching the stop positions and pressing the button stop position.

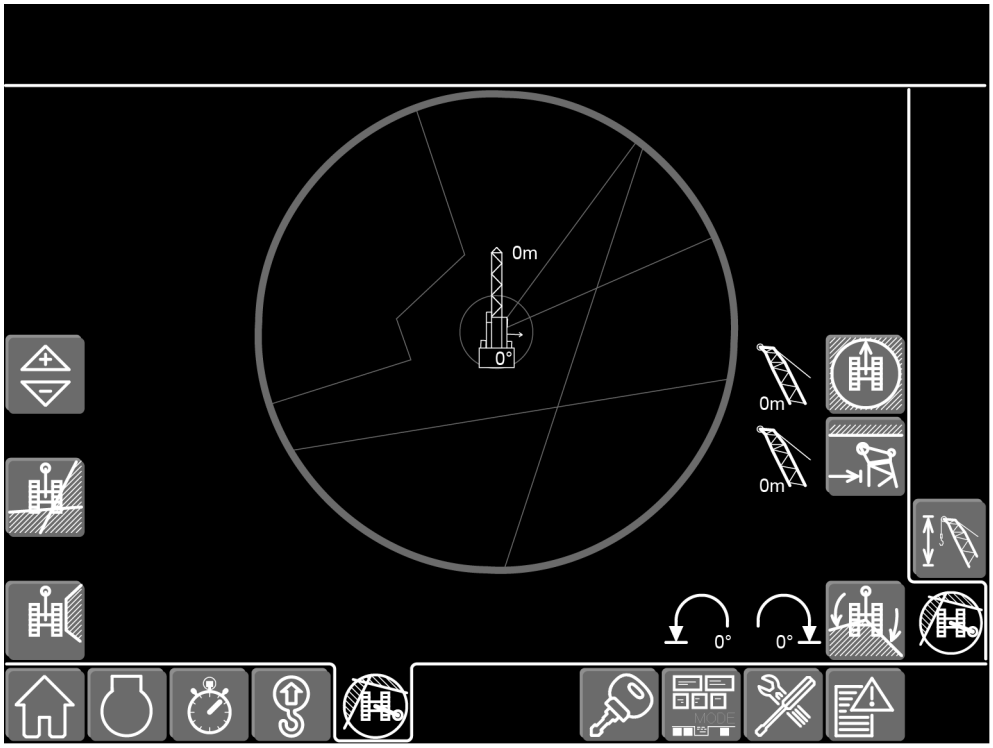

Fig. 1754: Screen Working range limitation - working range limitation - main boom - limitations turned off

LWN/LR.x/V03.01//Auslieferung/2015-06-03/en

copyright by
LIEBHERR

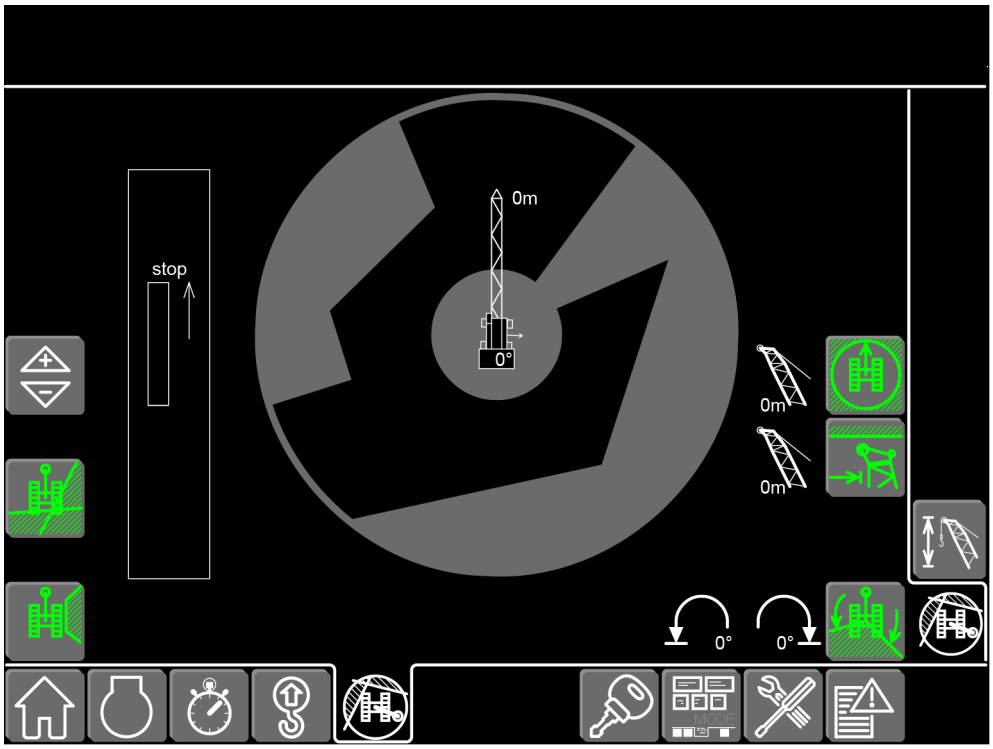

Fig. 1755: Screen Working range limitation - working range limitation - main boom - limitations turned on

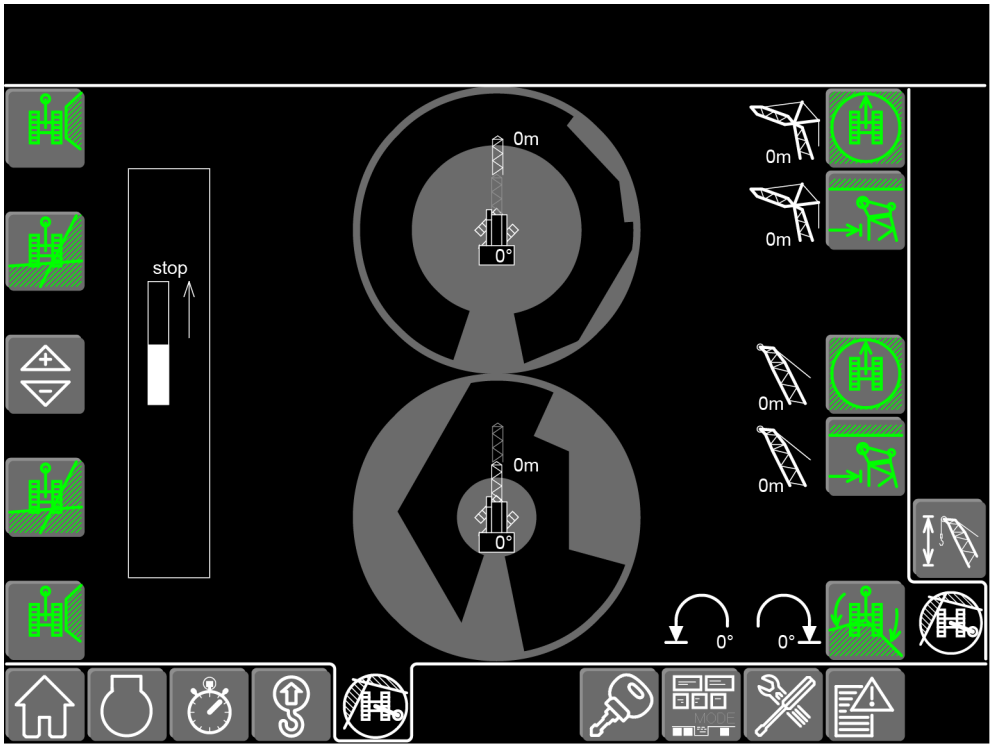

Fig. 1756: Screen Working range limitation - working range limitation - main boom and jib - limitations turned on

LWN/LR.x/V03.01//Auslieferung/2015-06-03/en

copyright by
LIEBHERR

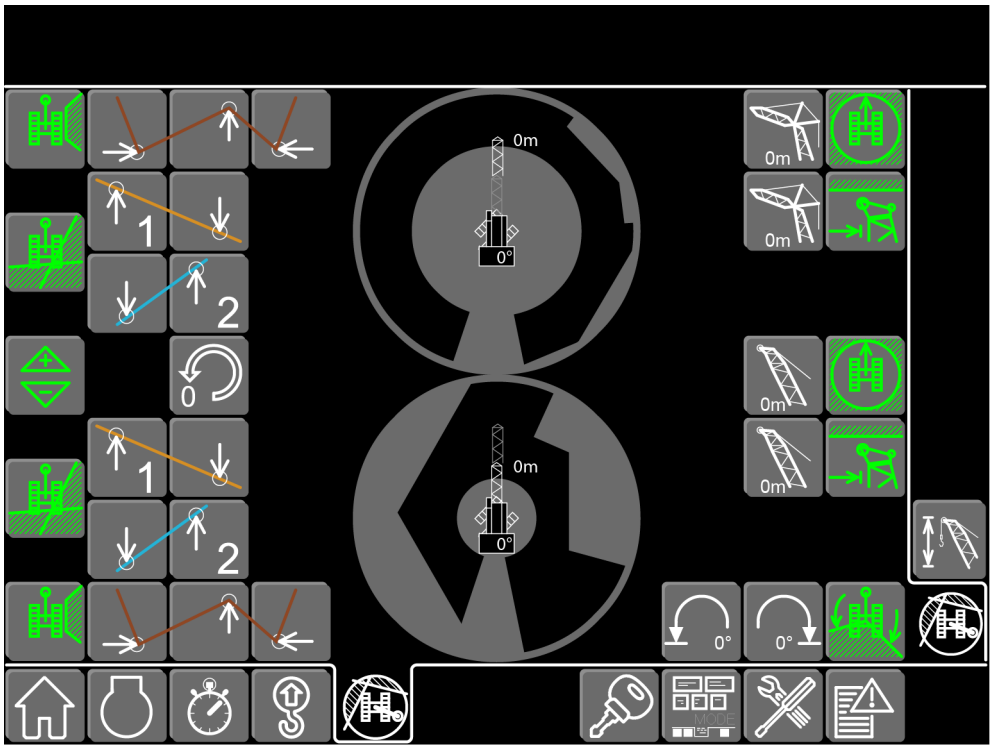

Fig. 1757: Screen Working range limitation - working range limitation - main boom and jib - program stop positions

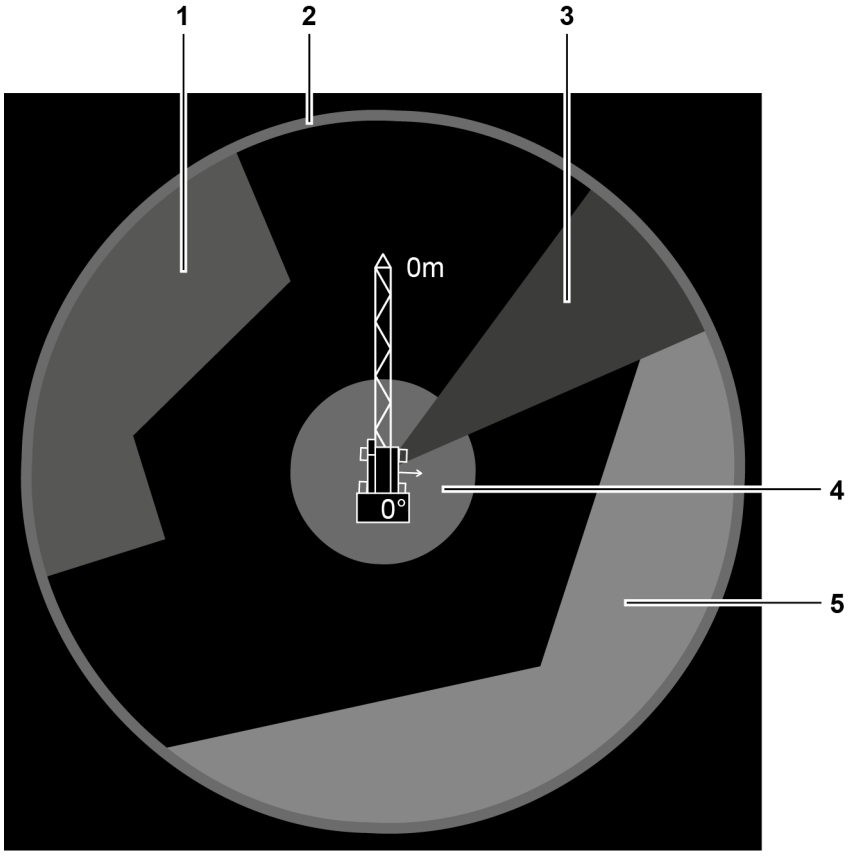

Fig. 1758: Screen section Working range limitation (illustration of principle)

1 Sector limitation

4 Radius limitation minimum radius

See next page for continuation of the image legend

LWN/LR.x/V03.01//Auslieferung/2015-06-03/en

2 Radius limitation maximum radius
3 Slewing range limitation
5 Edge limitation

Sector limitation

Activate last programmed sector limitation.

Sector limitation (lit green)

Deactivate last programmed sector limitation.

Sector limitation - stop position1

Program stop position1 of the sector limitation.

Sector limitation - stop position2

Program stop position2 of the sector limitation.

Sector limitation - stop position3

Program stop position3 of the sector limitation.

Edge limitation

Activate last programmed edge limitation.

Edge limitation (lit green)

Deactivate last programed edge limitation.

Edge limitation - edge1 - stop position1

Edge1 - program stop position1 of edge limitation.

Edge limitation - edge1 - stop position2

Edge1 - program stop position2 of edge limitation.

Edge limitation - edge2 - stop position1

Edge2 - program stop position1 of edge limitation.

Edge limitation - edge2 - stop position2

Edge2 - program stop position2 of edge limitation.

Programming

Show buttons of the stop positions.

The following stop positions are available:
– Edge limitation
– Sector limitation
– Boom radius limitation

LWN/LR.x/V03.01//Auslieferung/2015-06-03/en

copyright by LIEBHERR

– Swing limitation

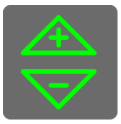

Programming (lit green)

Hide buttons of the stop positions.

Programming (lit red)

Machine was moved and working range limitation must be reprogramed.

Resetting limitations

Reset all limitations. Button must be pressed for more than 1 second.

Stop position maximum radius jib

Shows the last programmed stop position of the jib's maximum radius.

Stop position maximum radius jib

Program the stop position of the jib's maximum radius.

Radius limitation maximum jib radius

Activate last programed radius limitation maximum jib radius.

Radius limitation maximum jib radius (lit green)

Deactivate last programed radius limitation maximum jib radius.

Stop position minimum radius jib

Shows the last programmed stop position of the jib's minimum radius.

Stop position minimum radius jib

Program the stop position of the jib's minimum radius.

Radius limitation minimum jib radius

Activate last programed radius limitation minimum jib radius.

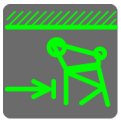

Radius limitation minimum jib radius (lit green)

Deactivate last programed radius limitation minimum jib radius.

Stop position maximum radius main boom

Shows the last programmed stop position of the main boom's maximum radius.

Stop position maximum radius main boom

Program the stop position of the main boom's maximum radius.

LWN/LR.x/V03.01//Auslieferung/2015-06-03/en

copyright by
LIEBHERR

Radius limitation maximum main boom radius

Activate last programed radius limitation maximum main boom radius.

Radius limitation maximum main boom radius (lit green)

Deactivate last programed radius limitation maximum main boom radius.

Stop position minimum radius main boom

Shows the last programmed stop position of the main boom's minimum radius.

Stop position minimum radius main boom

Program the stop position of the main boom's minimum radius.

Radius limitation minimum main boom radius

Activate last programed radius limitation minimum main boom radius.

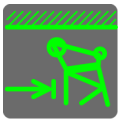

Radius limitation minimum main boom radius (lit green)

Deactivate last programed radius limitation minimum main boom radius.

Slewing range limitation

Activate last programed slewing range limitation.

Slewing range limitation (lit green)

Deactivate last programed slewing range limitation.

Slewing range limitation - left stop position

Shows the last programed left stop position of the slewing range limitation.

Slewing range limitation - left stop position

Program left stop position of slewing range limitation.

Slewing range limitation -right stop position

Shows the last programed right stop position of the slewing range limitation.

Slewing range limitation -right stop position

Program right stop position of slewing range limitation.

LWN/LR.x/V03.01//Auslieferung/2015-06-03/en

copyright by
LIEBHERR

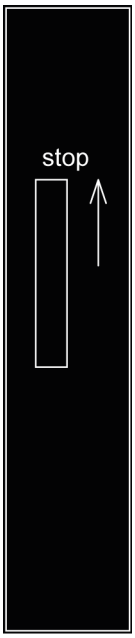

Bar display working range limitation

Stop position is more than 5 m (16‘ 5“ ft-in) away.

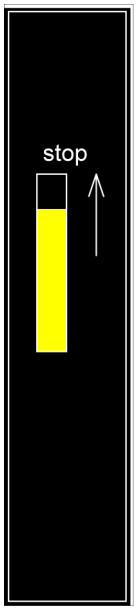

Bar display working range limitation (lit yellow)

Stop position reached.

LWN/LR.x/V03.01//Auslieferung/2015-06-03/en

copyright by
LIEBHERR

Bar display working range limitation (lit red)

Stop position reached.

The reached stop positions are displayed.

3.19.2 Screen *Working range limitation - lifting height limitation*

Working range limitation - lifting height limitation

Switch to the *Working range limitation - lifting height limitation* screen.

The screen *Working range limitation - lifting height limitation* offers settings for the lifting height limitation of winch1 and winch2.

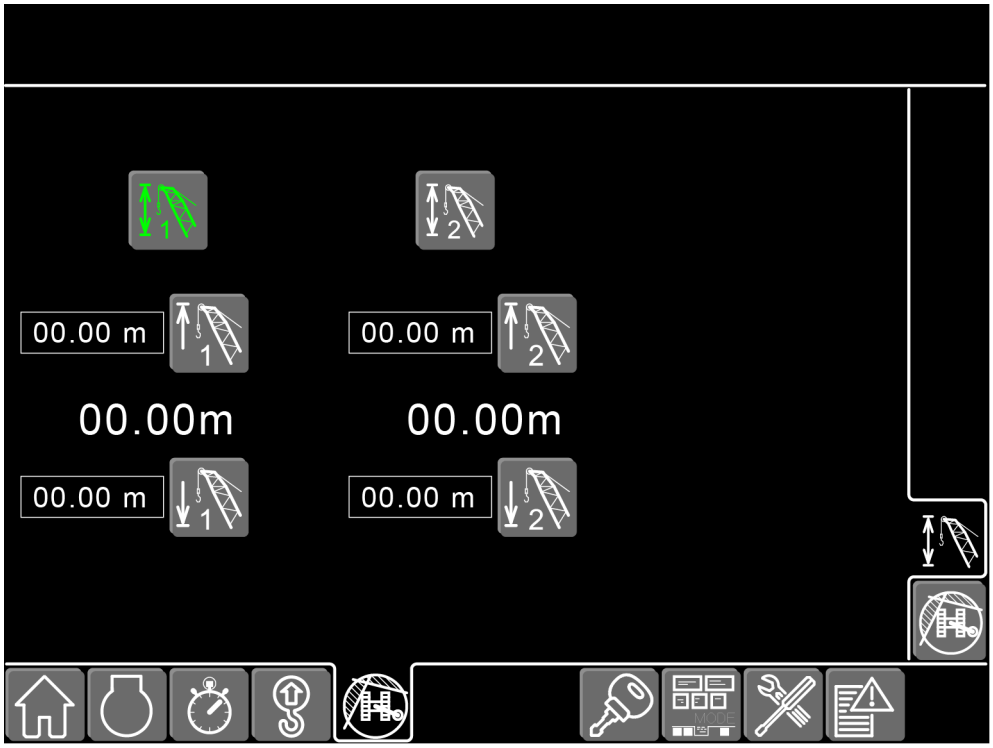

Fig. 1800: Screen Working range limitation - lifting height limitation

LWN/LR.x/V03.01//Auslieferung/2015-06-03/en

copyright by
LIEBHERR

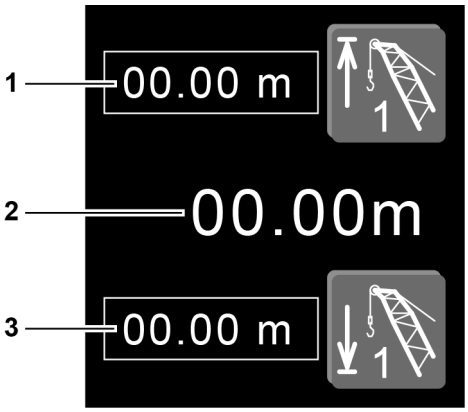

Fig. 1801: Screen section Lifting height limitation winch1

1 Top stop position of winch1
2 Current lifting height of winch1
3 Bottom stop position of winch1

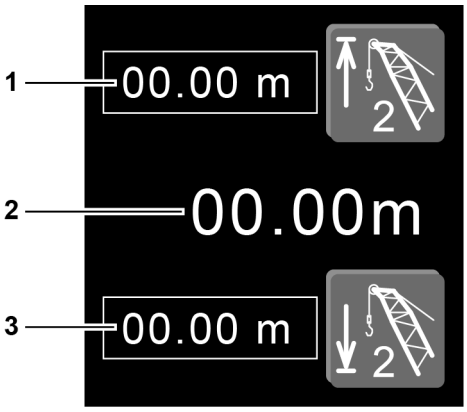

Fig. 1802: Screen section Lifting height limitation winch2

1 Top stop position of winch2
2 Current lifting height of winch2
3 Bottom stop position of winch2

Lifting height limitation winch1

Activate last programed lifting height limitation of winch1.

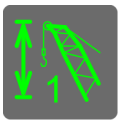

Lifting height limitation winch1 (lit green)

Deactivate last programed lifting height limitation of winch1.

Lifting height limitation winch2

Activate last programed lifting height limitation of winch2.

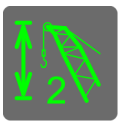

Lifting height limitation winch2 (lit green)

Deactivate last programed lifting height limitation of winch2.

Lifting height limitation winch1 - top stop position

Program top stop position of lifting height limitation of winch1.

LWN/LR.x/V03.01//Auslieferung/2015-06-03/en

Lifting height limitation winch1 - bottom stop position

Program bottom stop position of lifting height limitation of winch1.

Lifting height limitation winch2 - top stop position

Program top stop position of lifting height limitation of winch2.

Lifting height limitation winch2 - bottom stop position

Program bottom stop position of lifting height limitation of winch2.

LWN/LR.x/V03.01//Auslieferung/2015-06-03/en

copyright by
LIEBHERR

3.20 Screen *Access control*

Access control

Switch to the *Access control* screen.

The *Access control* screen serves to manage and/or control access to the machine.

3.20.1 Without retrofit kit access control (black ignition keys)

This situation occurs under the following conditions:
- Machine was delivered with software without the *Access control* screen.
- Machine was delivered with black ignition keys.
- Machine receives a retrospective software update and now features the *Access control* screen.
- Retrofit kit access control was not purchased.

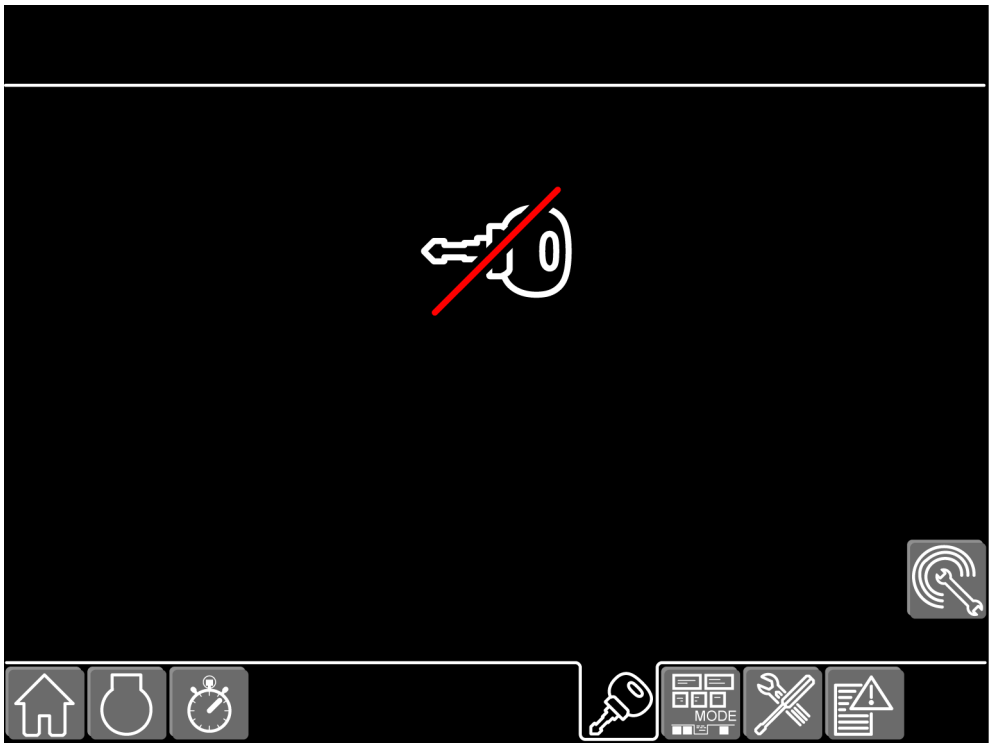

Fig. 1812: Access control screen - without retrofit kit access control (black ignition keys)

Remote service

Turn on the remote service.

Remote service (lit green)

Turn off the remote service.

LWN/LR.x/V03.01//Auslieferung/2015-06-03/en

copyright by
LIEBHERR

3.20.2 Without retrofit kit access control (blue ignition keys)

This situation occurs under the following conditions:
– Machine was delivered with current software with the *Access control* screen.
– Machine was delivered with blue, user-specific ignition keys.
– Retrofit kit access control was not purchased.

Each blue, user-specific ignition key allows operating the machine.

Each blue, user-specific ignition key can be assigned a name.

An access control of an individual ignition key cannot be defined.

The maximum number of blue, user-specific ignition keys is 50.

Fig. 1815: Access control screen - without retrofit kit access control (blue ignition keys)

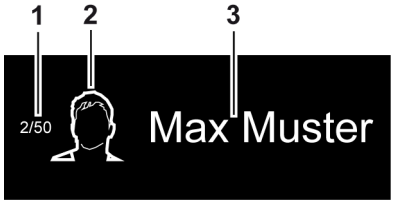

Fig. 1816: Screen section User

1 Second ignition key of max. 50 possible ones
2 User without access control
3 Name of the user

Keypad

Show keyboard for changing the name.

LWN/LR.x/V03.01//Auslieferung/2015-06-03/en

copyright by LIEBHERR

Remote service

Turn on the remote service.

Remote service (lit green)

Turn off the remote service.

3.20.3 With retrofit kit access control (red and blue ignition keys)*

This situation occurs under the following conditions:
- Machine was delivered with current software with the *Access control* screen.
- Machine was delivered with a red administrator ignition key and blue, user-specific ignition keys.
- Retrofit kit access control was purchased.

Only the red administrator ignition key functions when the machine is commissioned.

Each blue, user-specific ignition key must first be authorized by the administrator, thus guaranteeing access control.

The maximum number of blue, user-specific ignition keys is 50.

Fig. 1820: Screen Access control - with retrofit kit access control (access with red administrator ignition key)

LWN/LR.x/V03.01//Auslieferung/2015-06-03/en

copyright by
LIEBHERR

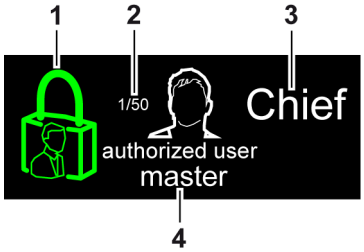

Fig. 1821: Screen section Administrator

1	Retrofit kit access control	**3**	Name of administrator
2	First ignition key of max. 50 possible ones	**4**	Administrator with access control (red ignition key)

Keypad

Show keyboard for changing the name.

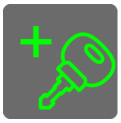

Authorize ignition key (lit green)

Authorize blue, user-specific ignition key.

Delete authorization of an ignition key (lit red)

Remove the authorization of a blue, user-specific ignition key.

Delete authorization of all ignition keys (lit red)

Delete authorization of all blue, user-specific ignition keys.

Remote service

Turn on the remote service.

Remote service (lit green)

Turn off the remote service.

LWN/LR.x/V03.01//Auslieferung/2015-06-03/en

copyright by
LIEBHERR

Fig. 1828: Access control screen - with retrofit kit access control (access with blue, user-specific ignition key)

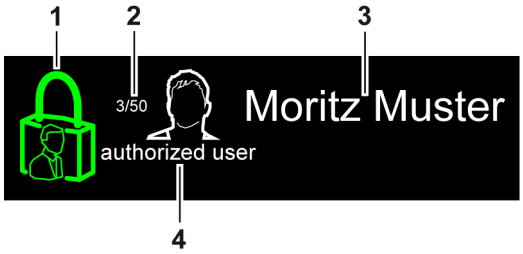

Fig. 1829: Screen section Authorized user

1	Retrofit kit access control	**3**	Name of the authorized user
2	Third ignition key of max. 50 possible ones	**4**	Authorized user

Keypad

Show keyboard for changing the name.

Remote service

Turn on the remote service.

Remote service (lit green)

Turn off the remote service.

LWN/LR.x/V03.01//Auslieferung/2015-06-03/en

copyright by
LIEBHERR

3.21 *Mode* screen

Mode

Switch to the *Mode* screen.

The *Mode* screen informs the machine operator about the modes that can be selected on this machine. The currently selected mode is displayed in green.

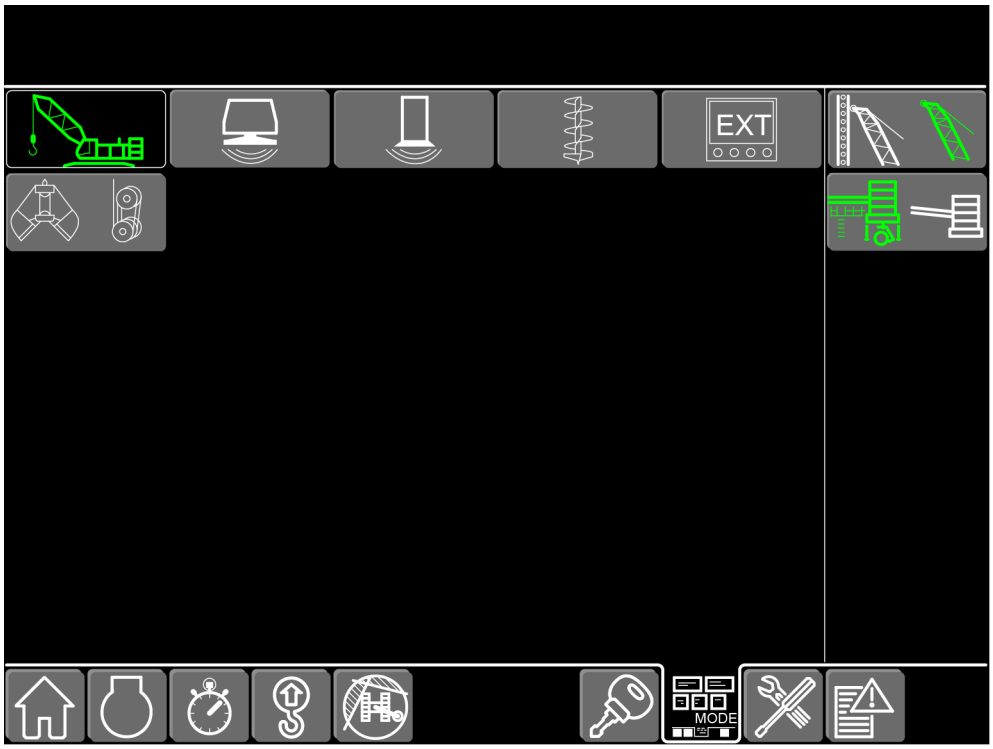

Fig. 1834: Mode screen

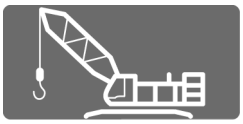

Crane mode

Select crane mode.

Vibrator mode

Select vibrator mode.

Hammer mode

Select hammer mode.

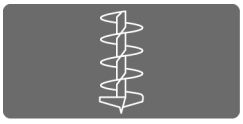

Drilling operation

Select rotary drive mode.

LWN/LR.x/V03.01//Auslieferung/2015-06-03/en

copyright by
LIEBHERR

External control

Select external control mode.

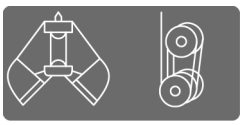

Mechanical grab mode

Select mechanical grab mode.

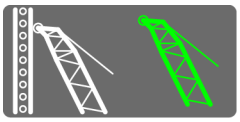

Leader mode

Select leader mode.

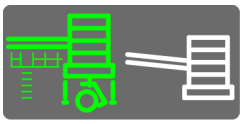

Counterweight carriage/suspended counterweight (only in derrick mode)

Select counterweight carriage or suspended counterweight.

Confirmation

Confirm input.

Restart machine

Restart machine to save the selected mode.

LWN/LR.x/V03.01//Auslieferung/2015-06-03/en

copyright by
LIEBHERR

3.22 *Settings* screen

Settings

Switch to the *Settings* screen.

3.22.1 Screen *Settings - components*

Settings - components

Switch to the *Settings - components* screen.

The *Settings - components* screen offers settings for the machine components.

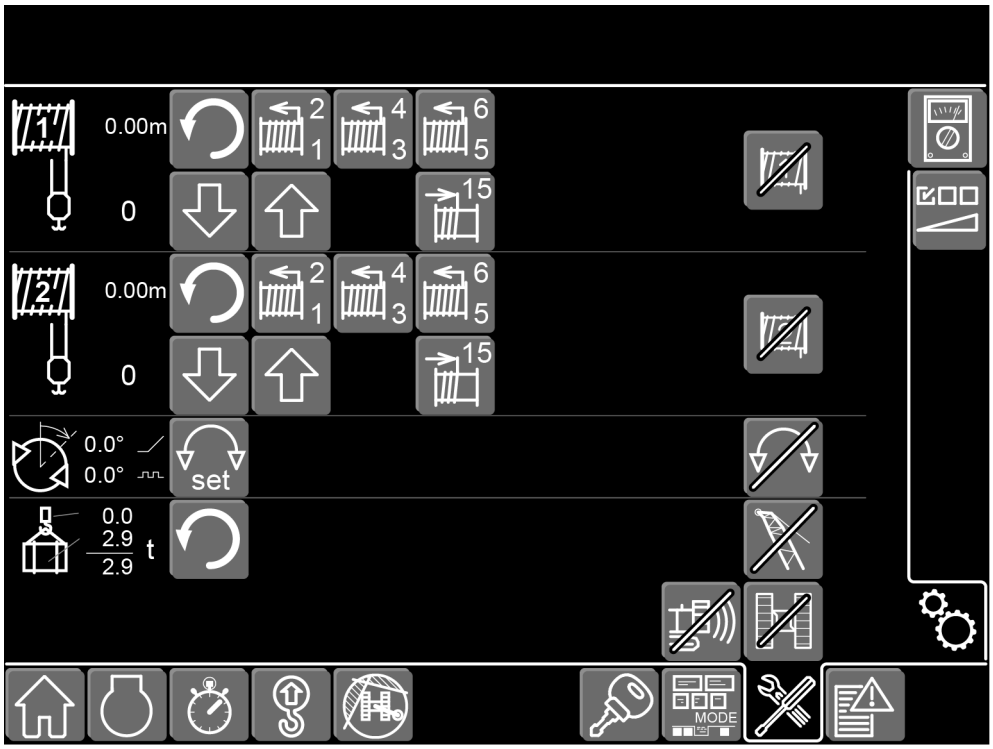

Fig. 1847: Settings - components screen

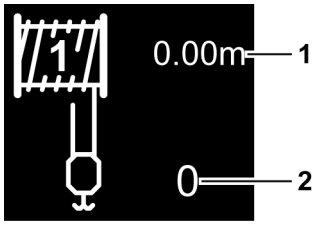

Fig. 1848: Screen clipping Winch1

1 Length of winch1 rope

2 Reeving of winch1 rope

LWN/LR.x/V03.01//Auslieferung/2015-06-03/en

copyright by
LIEBHERR

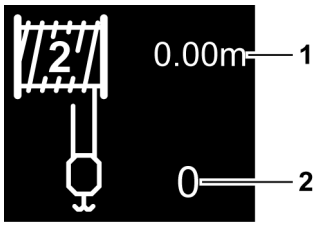

Fig. 1849: Screen clipping Winch2

1 Length of winch2 rope
2 Reeving of winch2 rope

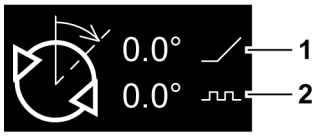

Fig. 1850: Swing angle transmitter screen clipping

1 Analog swing angle signal
2 Digital swing angle signal

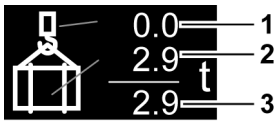

Fig. 1851: Load display screen clipping

1 Weight of the empty hook and rope of winch1/winch2
2 Weight of load
3 Total weight

Setting to zero

Setting the rope length of the selected winch to zero Button must be pressed for more than 1 second.

With the load display, set the weight of the rope of winch1, the rope of winch2 and the pulley block and/or empty hook to zero.

Reset load display (lit green)

Reset load display to total weight. Button must be pressed for more than 1 second.

Programing rope layer change 1-2

Programming the layer change of the selected winch from the first to the second rope layer. Button must be pressed for more than 1 second.

Programing rope layer change 3-4

Programming the layer change of the selected winch from the third to the fourth rope layer. Button must be pressed for more than 1 second.

Programing rope layer change 5-6

Programming the layer change of the selected winch from the fifth to the sixth rope layer. Button must be pressed for more than 1 second.

Reducing reeving

Reduce the reeving of the selected winch.

LWN/LR.x/V03.01//Auslieferung/2015-06-03/en

copyright by
LIEBHERR

Increasing reeving

Increase the reeving of the selected winch.

Setting the rope length to 15 windings

Setting the rope length of the selected winch to 15 windings. Button must be pressed for more than 1 second.

Synchronizing the swing angle transmitter

Synchronize the digital swing angle signal with the analog swing angle signal. Button must be pressed for more than 1 second.

Locking winch1

Lock winch1. Button must be pressed for more than 1 second.

Unlocking winch1 (lit red)

Unlock winch 1. Button must be pressed for more than 1 second.

Locking winch2

Lock winch2. Button must be pressed for more than 1 second.

Unlocking winch2 (lit red)

Unlock winch2. Button must be pressed for more than 1 second.

Locking the swing

Lock the swing. Button must be pressed for more than 1 second.

Unlocking the swing (lit red)

Unlock the swing. Button must be pressed for more than 1 second.

Locking the boom

Lock the boom. Button must be pressed for more than 1 second.

Unlocking the boom (lit red)

Unlock the boom. Button must be pressed for more than 1 second.

Locking the crawler

Lock the crawler. Button must be pressed for more than 1 second.

Unlocking the crawler (lit red)

Unlock the crawler. Button must be pressed for more than 1 second.

LWN/LR.x/V03.01//Auslieferung/2015-06-03/en

copyright by
LIEBHERR

Deactivating the motion warning device

Deactivate motion warning device. Button must be pressed for more than 1 second.

Activate motion warning device (lit red)

Activate motion warning device. Button must be pressed for more than 1 second.

3.22.2 Settings - units screen

Settings - units

Switch to the *Settings - units* screen.

The screen *Settings - units* offers settings for the monitor and the control levers.

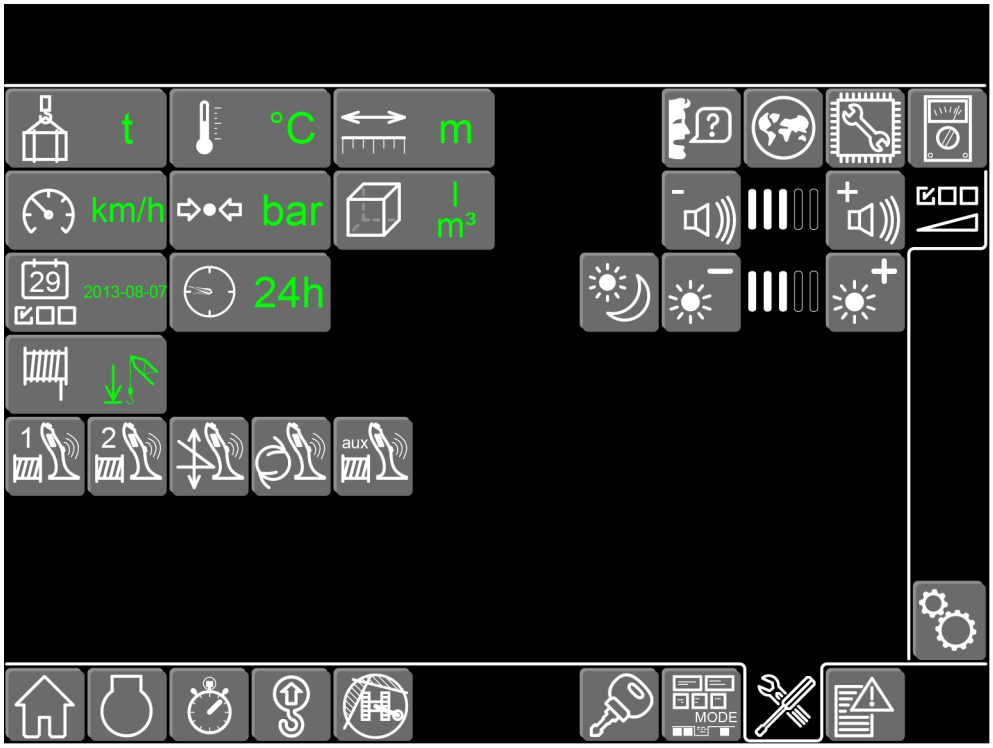

Fig. 1874: Settings - units screen

Unit weight

Switch the weight unit.

Unit weight

Switch the weight unit.

Unit temperature

Switch the temperature unit.

LWN/LR.x/V03.01//Auslieferung/2015-06-03/en

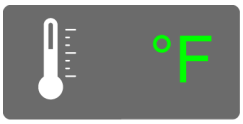

Unit temperature

Switch the temperature unit.

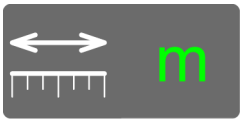

Unit length

Switch the length unit.

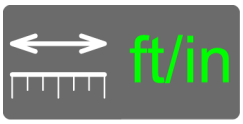

Unit length

Switch the length unit.

Unit speed

Switch the speed unit.

Unit speed

Switch the speed unit.

Unit pressure

Switch the pressure unit.

Unit pressure

Switch the pressure unit.

Unit volume

Switch the volume unit.

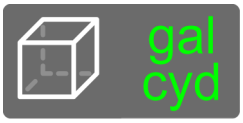

Unit volume

Switch the volume unit.

Format date

Switch the date format.

Format date

Switch the date format.

Format date

Switch the date format.

Format time

Switch the time format to 24 hours.

LWN/LR.x/V03.01//Auslieferung/2015-06-03/en

copyright by
LIEBHERR

Format time

Switch the time format to 12 hours.

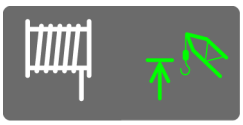

Rope length measurement

Switch to rope length measurement.

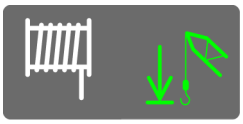

Lifting height measurement

Switch to lifting height measurement.

Vibrator winch1

Activate the vibrator on the control lever for winch1.

Vibrator winch1 (lit green)

Deactivate the vibrator on the control lever for winch1.

Vibrator winch2

Activate the vibrator on the control lever for winch2.

Vibrator winch2 (lit green)

Deactivate the vibrator on the control lever for winch2.

Boom vibrator

Activate the vibrator on the control lever for the boom.

Boom vibrator (lit green)

Deactivate the vibrator on the control lever for the boom.

Swing vibrator

Activate the vibrator on the control lever for the swing.

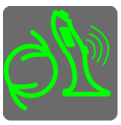

Swing vibrator (lit green)

Deactivate the vibrator on the control lever for the swing.

Vibrator additional winch

Activate the vibrator on the control lever for the additional winch.

Additional winch vibrator (lit green)

Deactivate the vibrator on the control lever for the additional winch.

LWN/LR.x/V03.01//Auslieferung/2015-06-03/en

copyright by
LIEBHERR

SCOTTI language

Switch to the *SCOTTI language* screen.

SCOTTI time zone

Switch to the *SCOTTI time zone* screen.

SCOTTI start page

Switch to the *SCOTTI start page* screen.

Reducing the volume

Reduces the volume of the warning signal.

Increasing the volume

Increases the volume of the warning signal.

Inverting the monitor

Inverts the monitor for night work.

Reducing the brightness

Reduces the brightness of the monitor.

Increasing the brightness

Increases the brightness of the monitor.

3.22.3 Screen *Settings - Litronic testing system*

Settings - Litronic testing system

Switch to the *Settings - Litronic testing system* screen.

The *Settings - Litronic testing system* screen shows inputs and outputs, markers, intrasystem variables and machine statuses.

LWN/LR.x/V03.01//Auslieferung/2015-06-03/en

copyright by
LIEBHERR

Menu bar

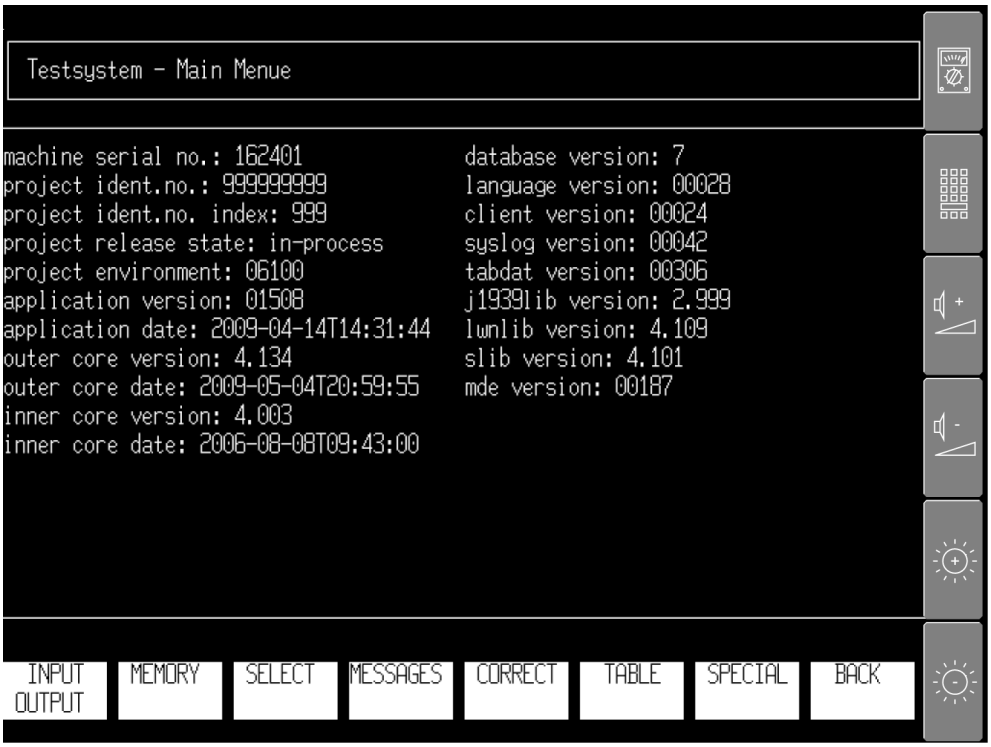

Fig. 1913: Settings - Litronic testing system screen with menu bar

Settings - Litronic testing system

Switch to the *Settings - Litronic testing system* screen.

Keyboard menu

Switch to keypad menu (For more information see: Keyboard menu, page 779) .

Increasing the volume of the warning buzzer

Increase the volume of the warning buzzer.

Decreasing the volume of the warning buzzer

Decrease the volume of the warning buzzer.

LWN/LR.x/V03.01//Auslieferung/2015-06-03/en

Increasing the brightness of the monitor

Increase the brightness of the monitor (3 stages).

Decreasing the brightness of the monitor

Decrease the brightness of the monitor (3 stages).

Keyboard menu

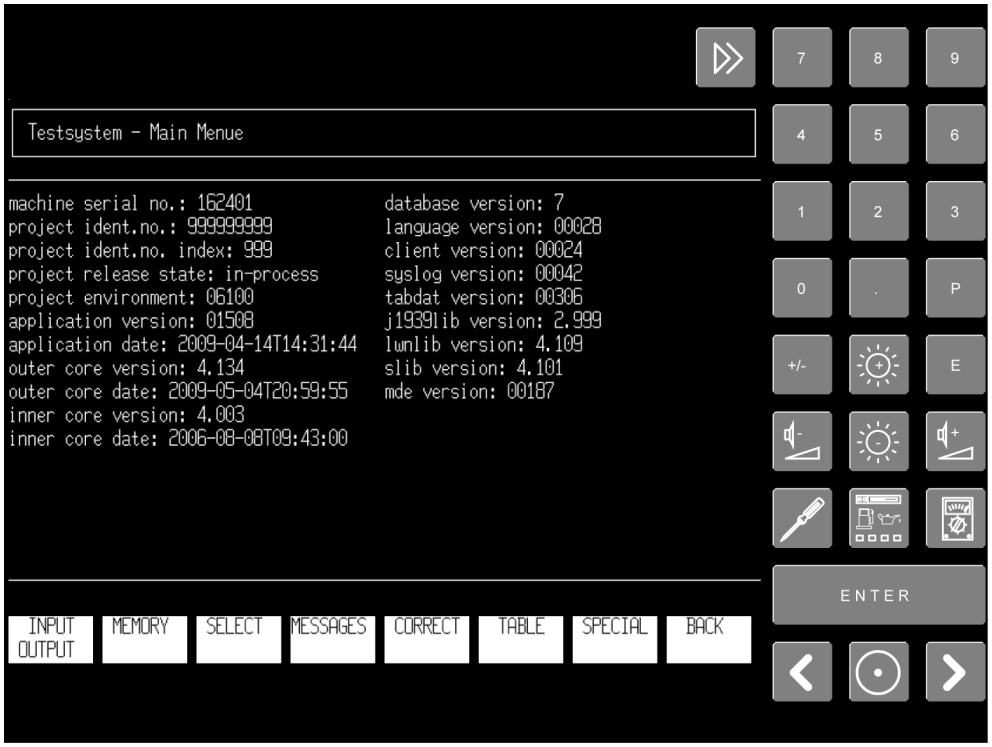

Fig. 1920: Settings - Litronic testing system screen with keyboard menu

Minimize

Switch to menu bar (For more information see: Menu bar, page 778) .

LWN/LR.x/V03.01//Auslieferung/2015-06-03/en

copyright by
LIEBHERR

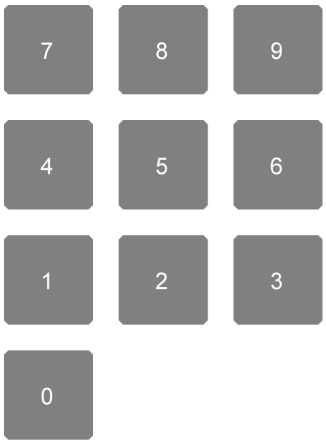

Numbers

Enter numbers.

Decimal point

Enter comma.

Powers

Select potencies.

Inverting numbers

Invert numbers.

Exponential numbers

Select exponents.

Increasing the brightness of the monitor

Increase the brightness of the monitor (3 stages).

Decreasing the brightness of the monitor

Decrease the brightness of the monitor (3 stages).

Increasing the volume of the warning buzzer

Increase the volume of the warning buzzer.

Decreasing the volume of the warning buzzer

Decrease the volume of the warning buzzer.

Settings - Litronic testing system - correction values

Switch to the *Settings - Litronic testing system - correction values* screen.

Screen

Switch to the last selected screen.

Settings - Litronic testing system

Switch to screen *Settings - Litronic testing system*.

Enter

Apply entered values.

LWN/LR.x/V03.01//Auslieferung/2015-06-03/en

copyright by
LIEBHERR

Back

Change to previous input field.

Continue

Change to next input field.

Testing system screen

Switch to the monitor testing system.

LWN/LR.x/V03.01//Auslieferung/2015-06-03/en

copyright by
LIEBHERR

3.23 *Error messages* screen

Error messages

Switch to the *Error messages* screen.

The *Error messages* screen informs in the local language about errors in/on the machine.

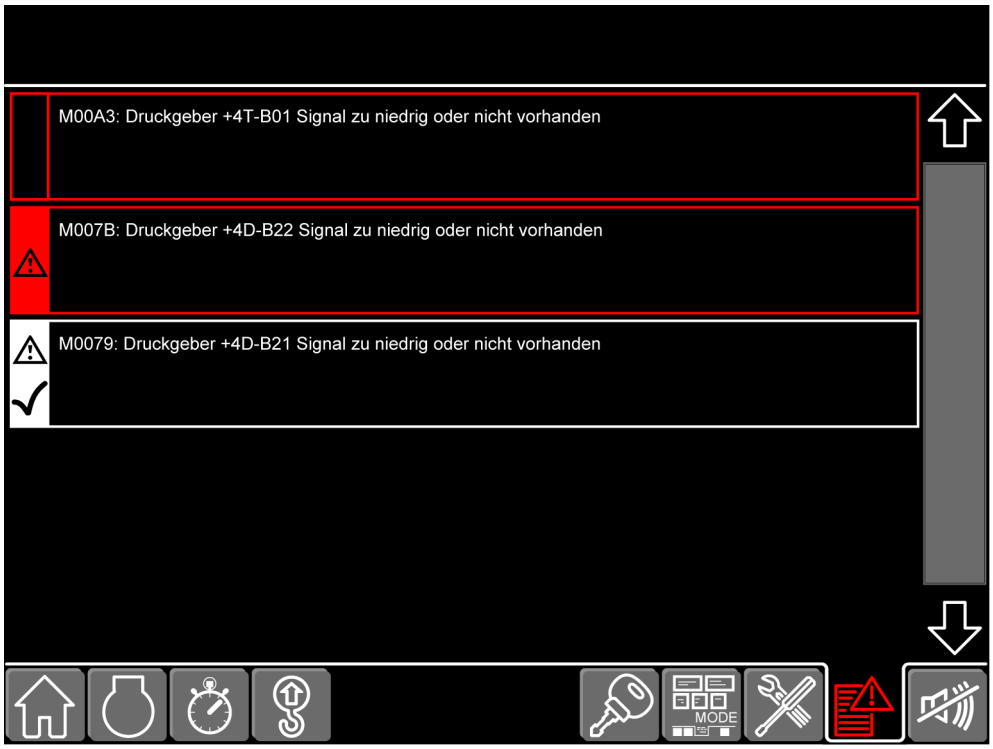

Fig. 1939: Error messages screen

Scrollbar

Navigate through the error messages. The scrollbar is activated as of five error messages.

LWN/LR.x/V03.01//Auslieferung/2015-06-03/en

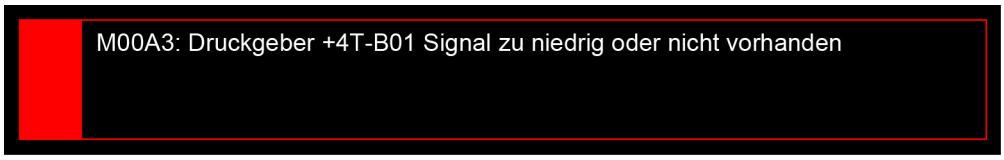

Fig. 1941: Error already remedied - not yet acknowledged (lit red)

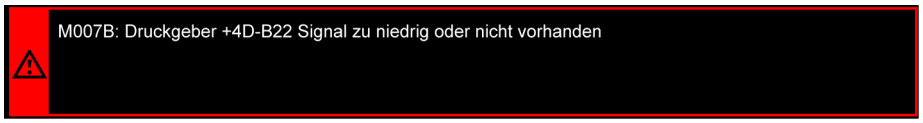

Fig. 1942: Error message - not acknowledged (lit red)

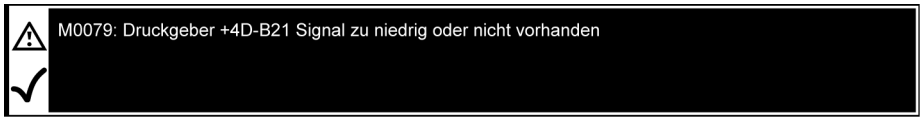

Fig. 1943: Error message - acknowledged

LWN/LR.x/V03.01//Auslieferung/2015-06-03/en

copyright by
LIEBHERR

3.24 Cable remote control

The cable remote control can be connected on the uppercarriage or on the undercarriage.

3.24.1 Cable remote control on uppercarriage

If the cable remote control is connected to the uppercarriage, the pin connection cylinders for the main boom base section and the counterweight hoisting cylinders can be operated.

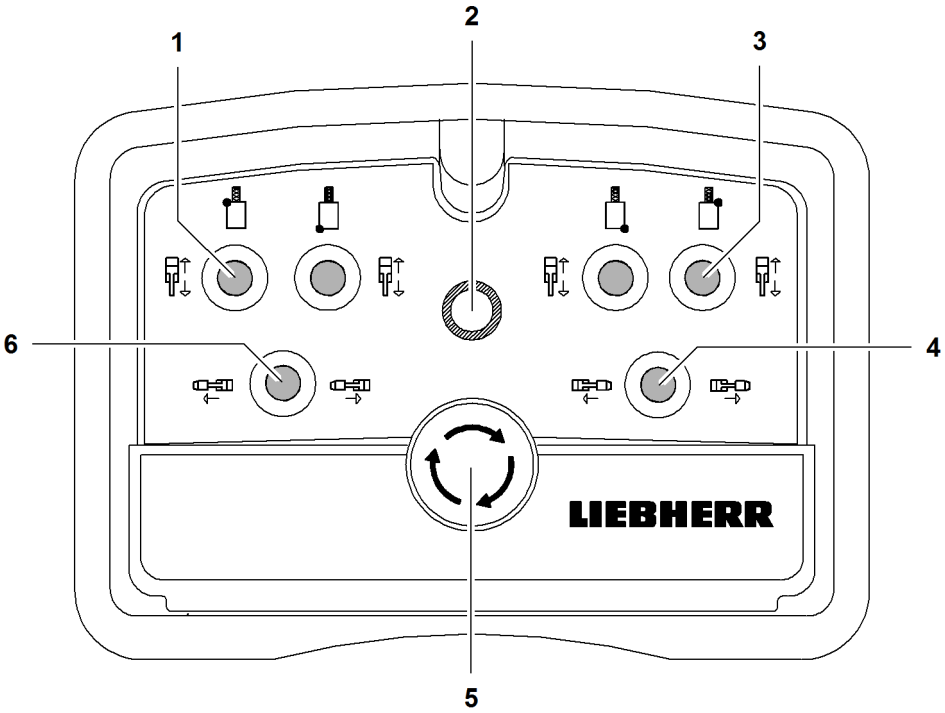

Fig. 1944: Cable remote control on uppercarriage

1 Toggle switch *Left counterweight hoisting cylinder*
2 Control lamp
3 Toggle switch *Right counterweight hoisting cylinder*
4 Toggle switch *Left pin connection cylinder*
5 Emergency stop
6 Toggle switch *Right pin connection cylinder*

3.24.2 Cable remote control on undercarriage*

If the cable remote control is connected to the undercarriage, the jacks and the track width adjusting cylinders can be operated.

LWN/LR.x/V03.01//Auslieferung/2015-06-03/en

copyright by LIEBHERR

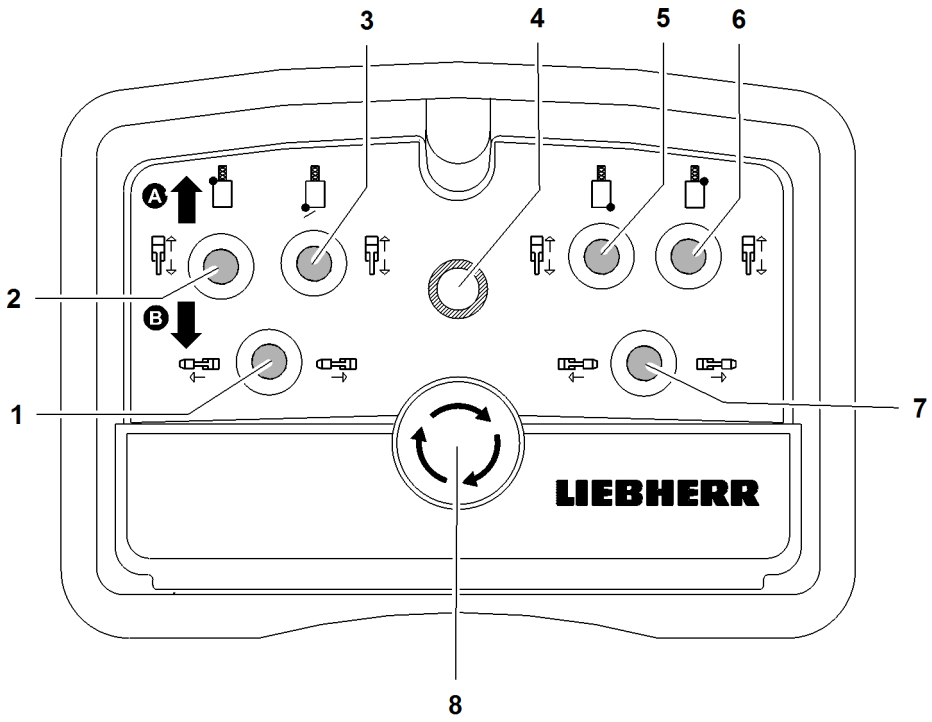

*Fig. 1945: Cable remote control on undercarriage**

1	Toggle switch *left track width adjusting cylinder*	**6**	Toggle switch *right front jack*
2	Toggle switch *left front jack*	**7**	Toggle switch *right track width adjusting cylinder*
3	Toggle switch *left rear jack*	**8**	Emergency stop
4	Control lamp	**A**	Extend jacks
5	Toggle switch *right rear jack*	**B**	Retract jacks

LWN/LR.x/V03.01//Auslieferung/2015-06-03/en

copyright by
LIEBHERR

3.25 Radio remote control*

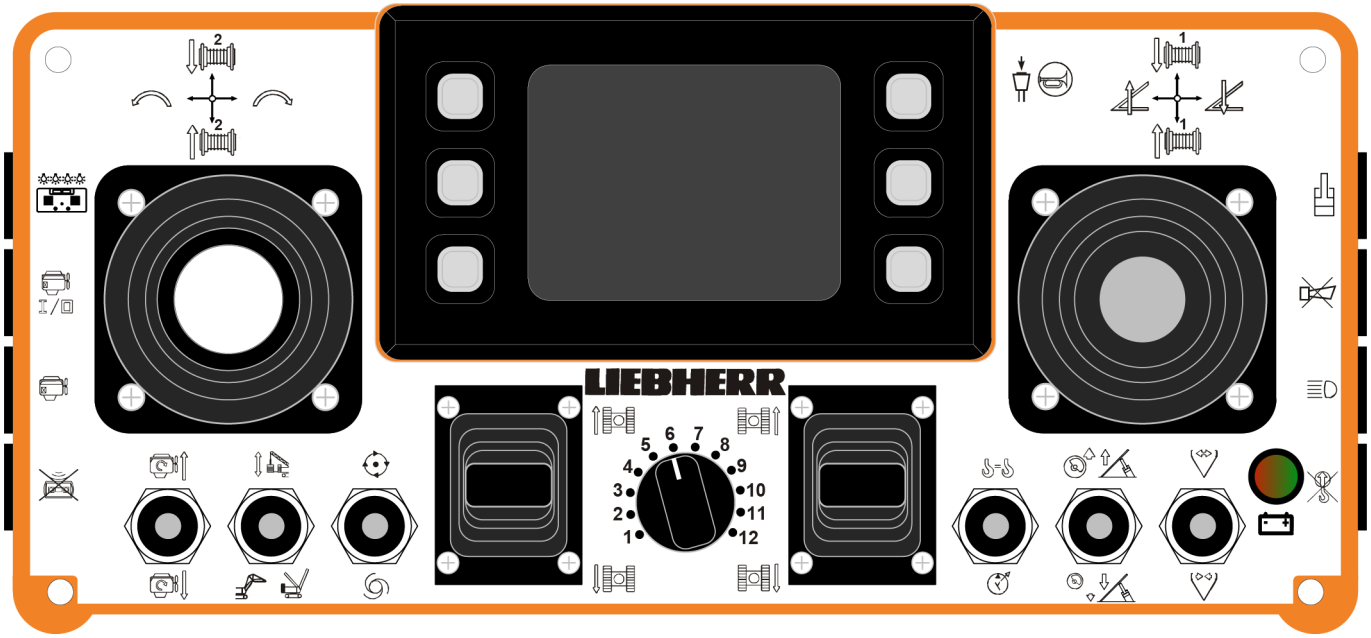

Fig. 1946: Radio remote control (view from top)

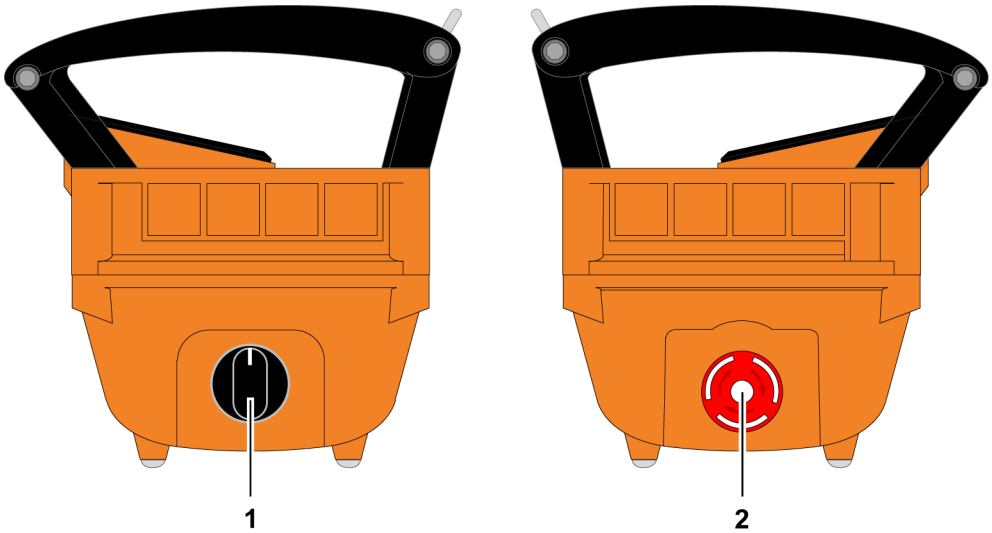

Fig. 1947: Radio remote control (view from side)

1 Rotary switch *ON/OFF* **2** Emergency stop

3.25.1 Operating elements

Rotary switch

[not used]

LWN/LR.x/V03.01//Auslieferung/2015-06-03/en

Battery charge state

LED **green**: battery charge state OK.

LED **red**: battery charge state low.

Left control lever

Function assignment movement direction of left control lever

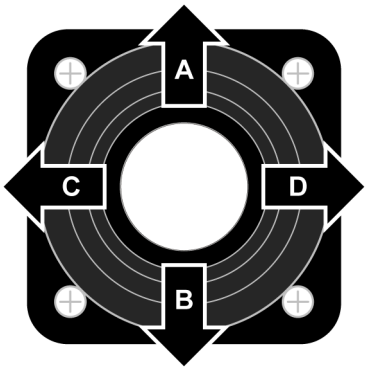

Fig. 1950: Function assignment movement direction of left control lever

Direction of movement	Pictogram	Mode	Toggle switch A)	Function
A	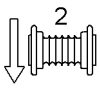	Crane mode		Lower winch2
		Crane mode	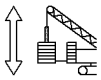	Retract derrick hoist cylinder
		Assembly functions		Lower winch2

LWN/LR.x/V03.01//Auslieferung/2015-06-03/en

copyright by
LIEBHERR

Radio remote control*

Direction of movement	Pictogram	Mode	Toggle switch A)	Function
B	2	Crane mode		Lift winch2
		Crane mode		Extend derrick hoist cylinder
		Assembly functions		Lift winch2
C		Crane mode		Swing uppercarriage to the left
		Assembly functions		Swing uppercarriage to the left
		Assembly functions		Lower jib
		Assembly functions		Lower main boom in derrick mode B)

LWN/LR.x/V03.01//Auslieferung/2015-06-03/en

copyright by LIEBHERR

Direction of movement	Pictogram	Mode	Toggle switch A)	Function
D		Crane mode		Swing uppercarriage to the right
		Assembly functions		Swing uppercarriage to the right
		Assembly functions		Lift jib
		Assembly functions		Lift main boom in derrick mode B)

Tab. 365: Function assignment movement direction of left control lever

A) Some toggle switches have several functions. The desired function can be selected by repeatedly actuating the toggle switch.
B) By default, this function is assigned to the left control lever. This function is only active on the right control lever after selecting “Jib luffing winch”.

Right control lever

Function assignment buttons of right control lever

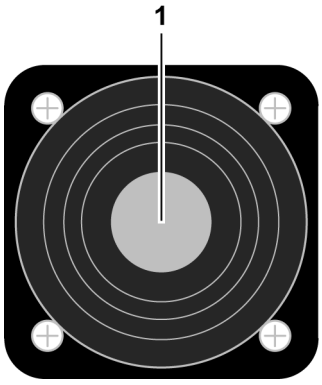

Fig. 1975: Function assignment buttons of right control lever

LWN/LR.x/V03.01//Auslieferung/2015-06-03/en

copyright by LIEBHERR

Button	Pictogram	Mode	Toggle switch	Name and function
1		Crane mode		**Horn** Sound horn.
		Assembly functions		**Horn** Sound horn.

Tab. 366: Function assignment buttons of right control lever

Function assignment movement direction of right control lever

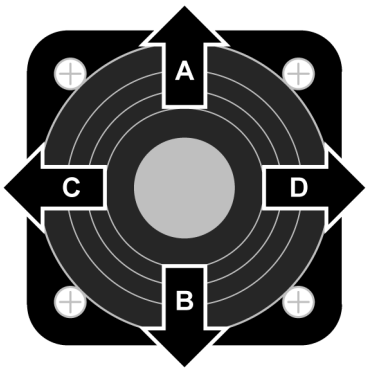

Fig. 1979: Function assignment movement direction of right control lever

Direction of movement	Pictogram	Mode	Toggle switch A)	Function
A	1	Crane mode		Lower winch1
		Assembly functions		Lower winch1
B	1	Crane mode		Lift winch1
		Assembly functions		Lift winch1

LWN/LR.x/V03.01//Auslieferung/2015-06-03/en

Direction of movement	Pictogram	Mode	Toggle switch A)	Function
C		Crane mode		Lift main boom
		Crane mode		Lift jib
		Assembly functions		Lift main boom
		Assembly functions		Lift derrick boom in derrick mode
		Assembly functions		Lift main boom in derrick mode B)
D		Crane mode		Lower main boom
		Crane mode		Lower jib
		Assembly functions		Lower main boom
		Assembly functions		Lower derrick boom in derrick mode
		Assembly functions		Lower main boom in derrick mode B)

Tab. 367: Function assignment movement direction of right control lever

A) Some toggle switches have several functions. The desired function can be selected by repeatedly actuating the toggle switch.

LWN/LR.x/V03.01//Auslieferung/2015-06-03/en

copyright by LIEBHERR

B) By default, this function is assigned to the left control lever. This function is only active on the right control lever after selecting “Jib luffing winch”.

Left linear control lever

Function assignment for movement directions on left linear control lever

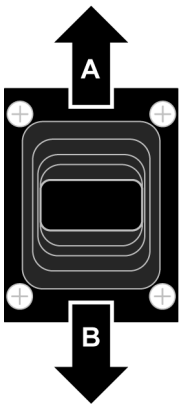

Fig. 2002: Function assignment for movement directions on left linear control lever

Direction of movement	Pictogram	Mode	Toggle switch	Function
A		Crane mode		Move left crawler forward
		Assembly functions		Move left crawler forward
B		Crane mode		Move left crawler backward
		Assembly functions		Move left crawler backward

Tab. 368: Function assignment for movement directions on left linear control lever

LWN/LR.x/V03.01//Auslieferung/2015-06-03/en

copyright by LIEBHERR

Right linear control lever

Function assignment of movement directions on right linear control lever

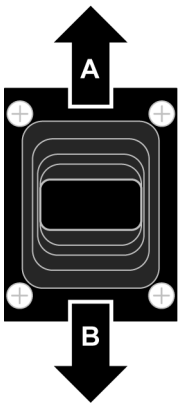

Fig. 2009: Function assignment of movement directions on right linear control lever

Direction of movement	Pictogram	Mode	Toggle switch	Function
A		Crane mode		Move right crawler forward
		Assembly functions		Move right crawler forward
B		Crane mode		Move right crawler backward
		Assembly functions		Move right crawler backward

Tab. 369: Function assignment of movement directions on right linear control lever

Buttons on the side

Lighting

Turn illumination of radio remote control on for 10 seconds.

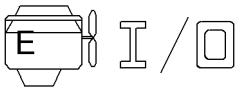

Diesel engine

Turn the diesel engine on or off.

LWN/LR.x/V03.01//Auslieferung/2015-06-03/en

copyright by
LIEBHERR

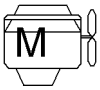

Save/delete constant engine RPM

Save current diesel engine RPM as constant engine RPM or delete saved constant engine RPM.

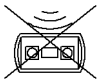

Take/cede control

Take or release control of/on the radio remote control.

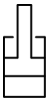

Cylinder adjustment functions

Activate/deactivate cylinder adjustment functions on undercarriage and uppercarriage.

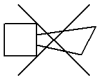

Warning buzzer

Deactivate warning buzzer.

Floodlights on uppercarriage

Turn the floodlight on the uppercarriage on or off.

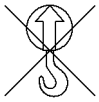

Load moment limiter assembly/self-lock

Activating or deactivating the function load moment limiter assembly or load moment limiter self-lock (This is the only function of this button even with machines with an ANSI load chart. The switch *Load moment limiter shut-down* on control panel *X12* has no influence on this function).

Toggle switch

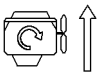

Increase RPM

Increase the RPM of the diesel engine.

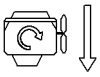

Reduce RPM

Reduce the RPM of the diesel engine.

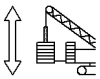

Derrick hoist cylinder

Select Derrick hoist cylinder (not possible with activated assembly function).

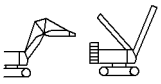

Jib luffing winch/derrick winch

Select jib luffing winch.

In derrick mode: select Derrick winch.

Slewing free-wheel

Activating swing free-wheel.

Automatic mode preselect

[not used]

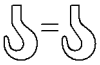

Winch synchronisation

Activate winch synchronization.

Additional hydraulics

[not used]

LWN/LR.x/V03.01//Auslieferung/2015-06-03/en

copyright by
LIEBHERR

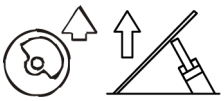

Extend A-frame1 cylinder

Extends A-frame1 cylinder. Works exclusively when assembly mode functions are activated.

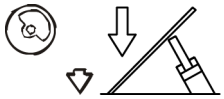

Retract A-frame1 cylinder

Retracts A-frame1 cylinder. Works exclusively when assembly mode functions are activated.

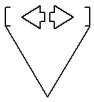

Open clamp

[not used]

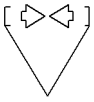

Close clamp

[not used]

3.25.2 Monitor

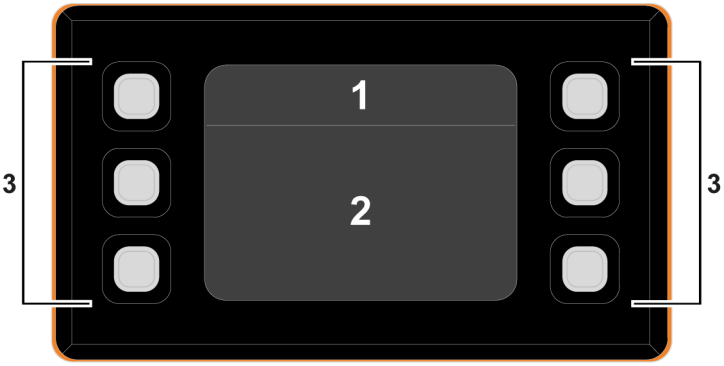

Fig. 2036: Monitor sections

1 Status bar
2 Display area
3 Monitor buttons

Status bar

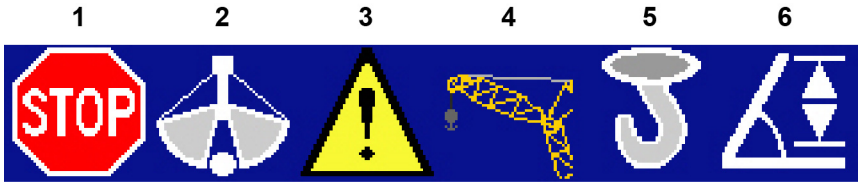

Fig. 2037: Status bar - positioning

Position 1

Winch synchronization

Winch synchronization is switched on.

LWN/LR.x/V03.01//Auslieferung/2015-06-03/en

copyright by LIEBHERR

Load moment limiter warning (lit yellow)

Load moment is used to more than 90 % capacity.

Load moment limiter stop (lit red)

Load moment is used to more than 100 % capacity.

Deactivating the load moment limiter

Load moment limiter is turned off.

Radio remote control locked

Radio remote control is locked. Machine cannot be operated via radio remote control.

Position 2

Swing speed level

Speed level 1 for the swing is set.

Swing speed level

Speed level 2 for the swing is set.

Swing speed level

Speed level 3 for the swing is set.

Swing free-wheel

Swing free-wheel is turned on.

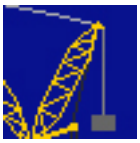

Derrick hoist cylinder

Derrick hoist cylinder is selected.

Position 3

Speed level main boom

Speed level 1 selected for main boom.

LWN/LR.x/V03.01//Auslieferung/2015-06-03/en

copyright by
LIEBHERR

Speed level main boom

Speed level 2 selected for main boom.

Speed level main boom

Speed level 3 selected for main boom.

Speed level jib

Speed level 1 is selected for jib.

Speed level jib

Speed level 2 is selected for jib.

Speed level jib

Speed level 3 is selected for jib.

Auxiliary winch

Auxiliary winch is selected.

Position 4

Battery charge

Battery is not charging.

Fuel fill level (lit yellow)

Fill level of the fuel tank is less than 15% of the maximum filling capacity.

Fuel fill level (lit red)

Fill level of the fuel tank is less than 5% of the maximum filling capacity.

Hydraulic oil fill level

Fill level of hydraulic oil tank is too low.

Lubrication oil pressure

Pressure of the lubrication oil of the diesel engine is too high.

LWN/LR.x/V03.01//Auslieferung/2015-06-03/en

copyright by
LIEBHERR

Position 5

Diesel engine

Diesel engine is being pre-heated or post-heated.

Drive is limited

Several limit switches block the current movement direction of the control lever.

Limit switch bypassed

Certain limit switches when rigging, converting and unrigging the boom with activated assembly functions are bypassed.

Position 6

Error messages

At least one confirmed error message is present.

Error messages

At least one unconfirmed error message is present.

Feed pressure winch1

Feed pressure on winch1 is too low.

Feed pressure winch2

Feed pressure on winch2 is too low.

General error

General error has occurred.

LWN/LR.x/V03.01//Auslieferung/2015-06-03/en

copyright by
LIEBHERR

Display area

Mode screen

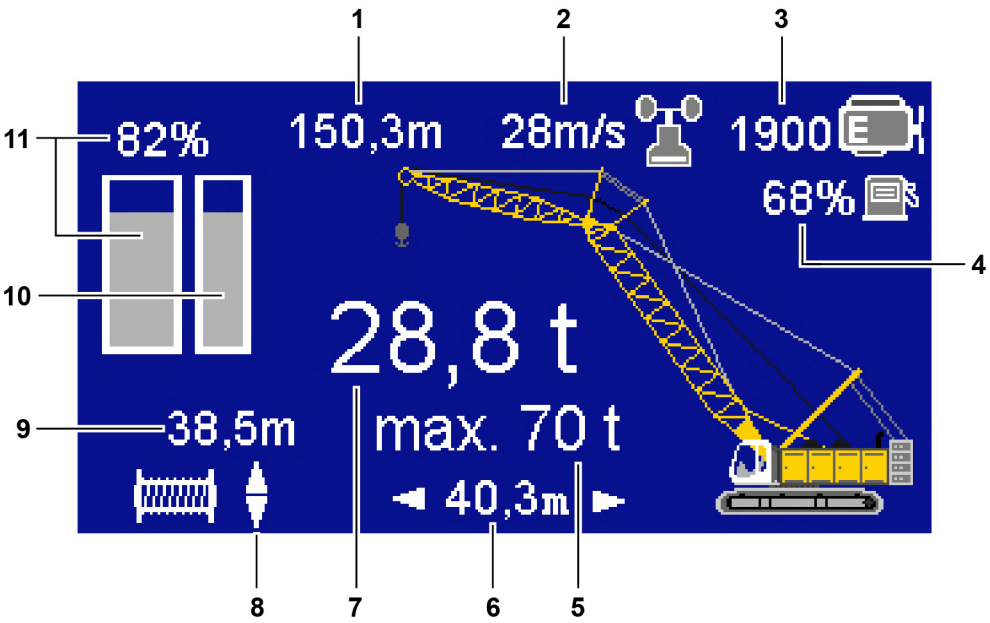

Fig. 2068: Mode screen

1	Pulley height on boom	**7**	Load on boom
2	Wind speed	**8**	Reeving direction of winch1/ winch2 rope
3	RPM	**9**	Length of winch1/winch2 rope
4	Fuel fill level	**10**	Load moment limiter to the rear
5	Maximum load on boom	**11**	Load moment limiter to the front
6	Radius of load on boom		

LWN/LR.x/V03.01//Auslieferung/2015-06-03/en

copyright by
LIEBHERR

Screen *Operation* with activated assembly functions

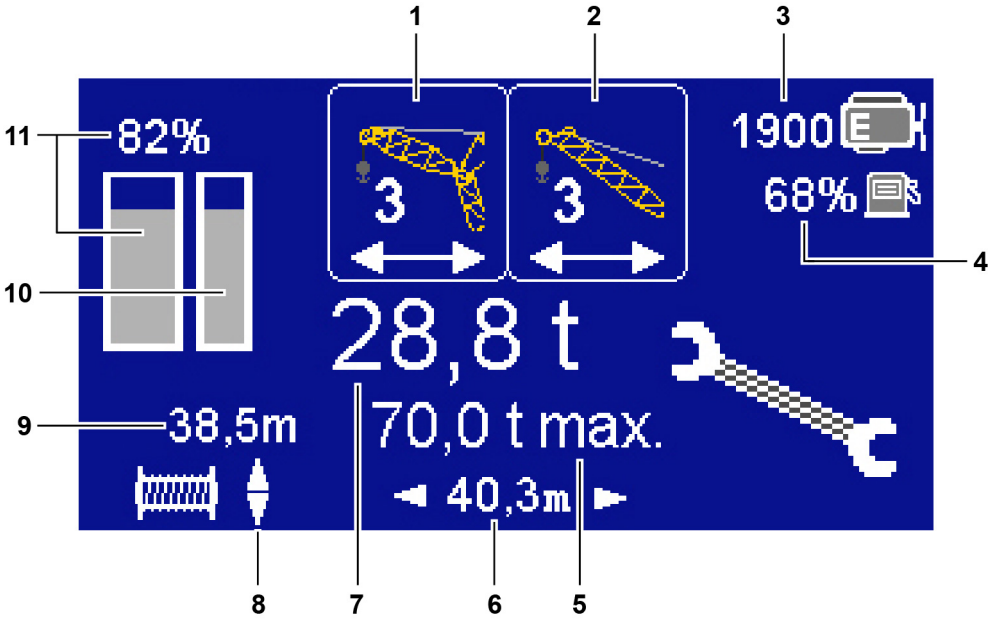

Fig. 2069: Screen Operation with activated assembly functions

1	Horizontal function assignment of left control lever	**7**	Load on boom
2	Horizontal function assignment of right control lever	**8**	Reeving direction of winch1/ winch2 rope
3	RPM	**9**	Length of winch1/winch2 rope
4	Fuel fill level	**10**	Load moment limiter to the rear
5	Maximum load	**11**	Load moment limiter to the front
6	Radius of load on boom		

Stop screen

Fig. 2070: Stop screen

LWN/LR.x/V03.01//Auslieferung/2015-06-03/en

The *Stop* screen appears on the monitor if free-fall mode was selected on the machine.

Screen *Confirm connection*

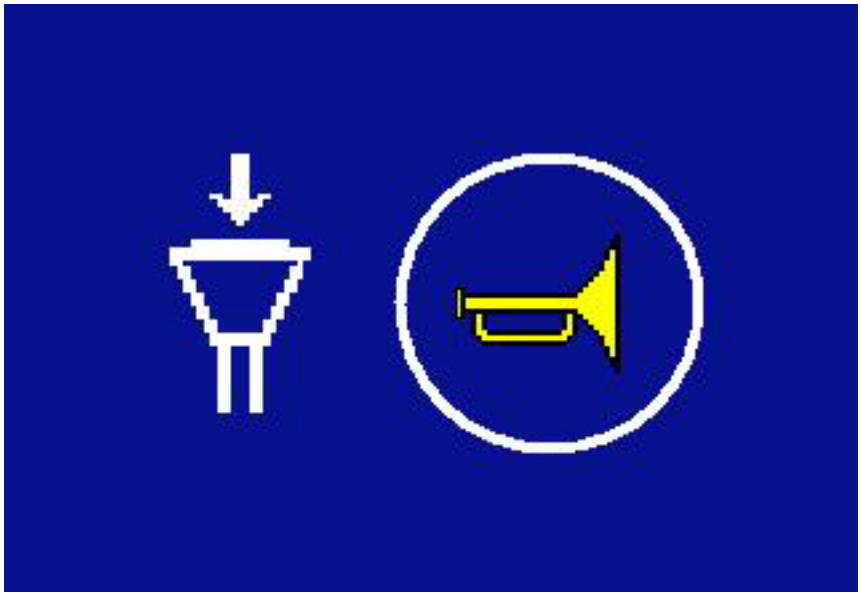

Fig. 2071: Screen Confirm connection

The screen *Connection established confirmed* appears in the following situations:
– Activating the radio remote control
– Disconnection for more than 8 seconds
– Emergency stop

Monitor buttons

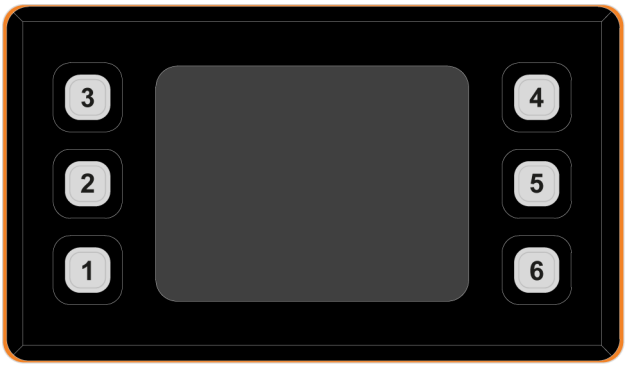

Fig. 2072: Monitor buttons

LWN/LR.x/V03.01//Auslieferung/2015-06-03/en

copyright by
LIEBHERR

Button	Screen	Name and function
1	*Mode*	**Setting the rope length to zero** Set rope length of winch1/winch2 to zero.
	Operation with activated assembly functions	**Setting the rope length to zero** Set rope length of winch1/winch2 to zero.
2	*Mode*	**Setting the load display to zero** Set weight of winch1 rope, winch2 rope and the pulley block and/or empty hook to zero.
	Operation with activated assembly functions	**Setting the load display to zero** Set weight of winch1 rope, winch2 rope and the pulley block and/or empty hook to zero.
3	*Mode*	**Monitor settings** Configure monitor settings.
	Operation with activated assembly functions	**Monitor settings** Configure monitor settings.
4	*Mode*	[not used]
	Operation with activated assembly functions	[not used]
5	*Mode*	**Speed level boom adjustment** Control speed level for boom adjustment.
	Operation with activated assembly functions	**Speed level boom adjustment** Control speed level for boom adjustment.
6	*Mode*	**Swing speed level** Controls swing speed level.
	Operation with activated assembly functions	**Swing speed level** Controls swing speed level.

Tab. 370: Function assignment of monitor buttons

LWN/LR.x/V03.01//Auslieferung/2015-06-03/en

copyright by
LIEBHERR

3.26 Emergency operation control*

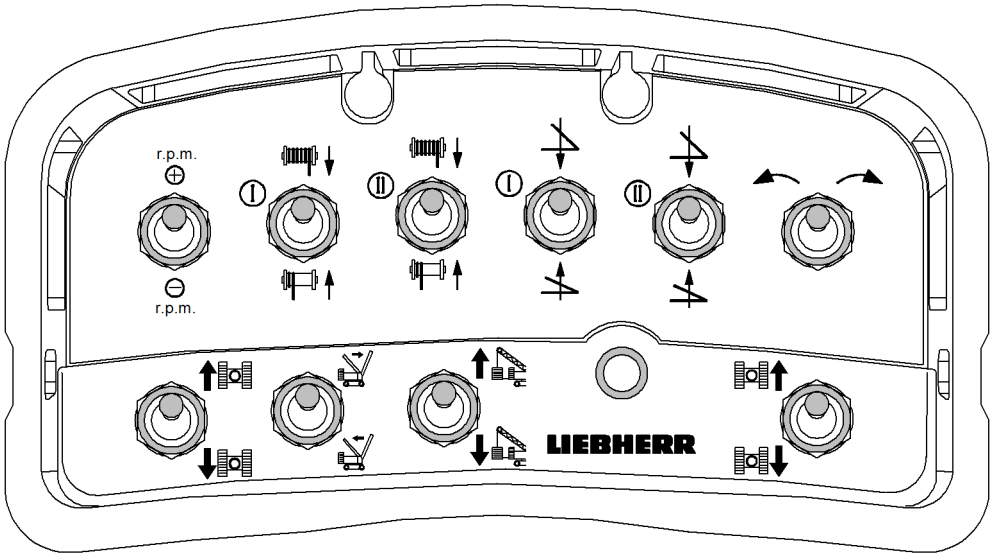

Fig. 2073: Emergency control system

The toggle switches on the control panel are touch-sensitive, meaning that a function is performed for as long as the toggle switch is pressed. The toggle switch for RPM control is a maintained-contact button.

r.p.m. ⊕

Increase RPM

Increase the RPM of the diesel engine.

⊖ r.p.m.

Reduce RPM

Reduce the RPM of the diesel engine.

Ⅰ

Lower winch 1

Lower winch1.

Ⅰ

Raise winch 1

Lift winch1.

Ⅱ

Lower winch 2

Lower winch2.

Ⅱ

Raise winch 2

Lift winch2.

Ⅰ

Lower the main boom

Lower the main boom.

In derrick mode, lower the derrick boom.

Ⅰ

Raise the main boom

Lift the main boom.

In derrick mode, lift the derrick boom.

Ⅱ

Lower jib

Lower jib.

LWN/LR.x/V03.01//Auslieferung/2015-06-03/en

copyright by LIEBHERR

Raise jib

Lift jib.

Swing uppercarriage to the left

Swing uppercarriage to the left.

Swing uppercarriage to the right

Swing uppercarriage to the right.

Move left crawler forward

Move left crawler forward.

Move left crawler backward

Move left crawler backward.

Lower derrick winch

In derrick mode, lower the main boom.

Raise derrick winch

In derrick mode, lift the main boom.

Retracting the derrick hoist cylinder

In derrick mode, retract derrick hoist cylinder.

Extend derrick hoist cylinder

In derrick mode, extend derrick hoist cylinder.

Move right crawler forward

Move right crawler forward.

Move right crawler backward

Move right crawler backward.

Status display (LED)

The status display (LED) lights up when the ignition is switched on.

LWN/LR.x/V03.01//Auslieferung/2015-06-03/en

copyright by
LIEBHERR

3.27 Hydraulic cab elevation*

3.27.1 Operating elements in the cab

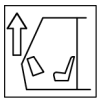

Raising the cabin

Raise cabin.

Lowering the cabin downward

Lower cabin.

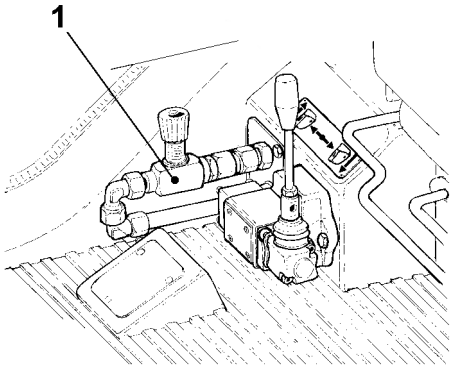

Fig. 2097: Operating elements in the cabin

1 Emergency lowering valve for cabin

LWN/LR.x/V03.01//Auslieferung/2015-06-03/en

copyright by
LIEBHERR

3.27.2 Operating elements on mast

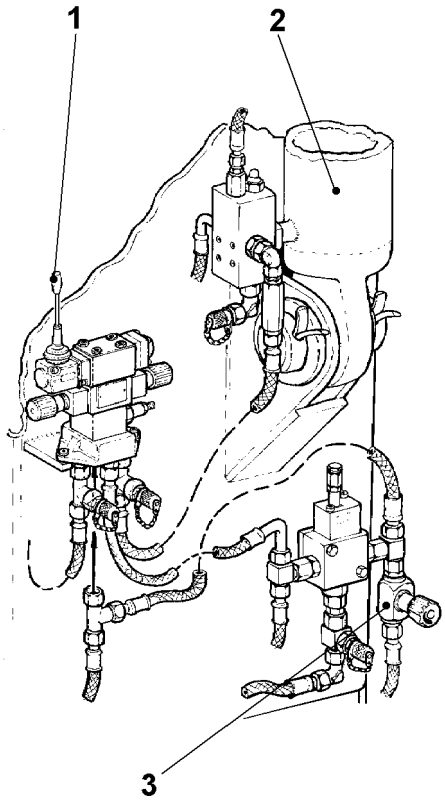

Fig. 2098: Operating elements on mast

1 Adjusting lever for the leader

2 Adjustment cylinder for the leader

3 Emergency lowering valve for the cab

3.27.3 Limit switches

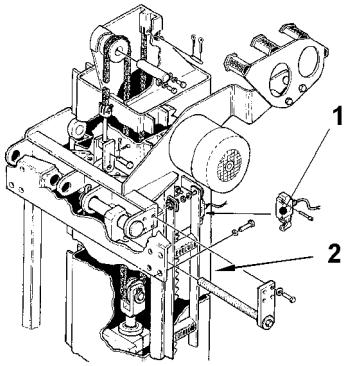

Fig. 2099: Limit switches

1 Limit switches

2 Limit switches

LWN/LR.x/V03.01//Auslieferung/2015-06-03/en

The limit switch **1** monitors whether the cab is in the lowered position.

The limit switch **2** monitors whether the cab has been extended laterally.

LWN/LR.x/V03.01//Auslieferung/2015-06-03/en

copyright by
LIEBHERR

3.28 Control unit *external air conditioning system**

The control unit *External air conditioning system* serves to control and monitor the diesel engine of the external air conditioning system.

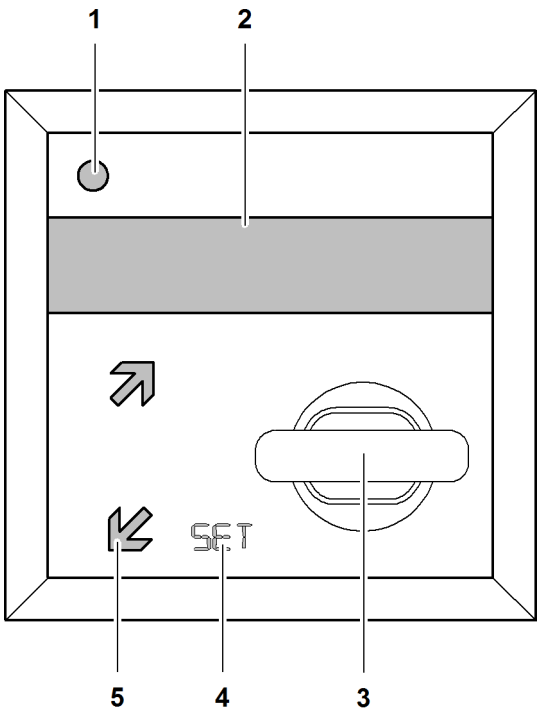

Fig. 2100: Control unit external air conditioning system

1	Operating LED/error LED	**4**	Button *SET*
2	Display	**5**	Button *F1, F2*
3	Ignition key		

The following values are shown on the display:
- Software version
- Oil pressure
- Operating hours
  - Total operating hours
  - Daily operating hours
- Engine temperature
- Diesel engine RPM
- Error messages

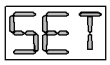

SET

Display changes.

Confirm input.

F1

Change to next display.

Increase value.

LWN/LR.x/V03.01//Auslieferung/2015-06-03/en

F2

Change to previous display.

Decrease value.

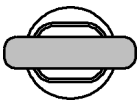

Ignition key

- Position 0: OFF
- Position 1: ON
- Position 2: Start

LWN/LR.x/V03.01//Auslieferung/2015-06-03/en

copyright by
LIEBHERR

3.29 *Auxiliary heating** control unit

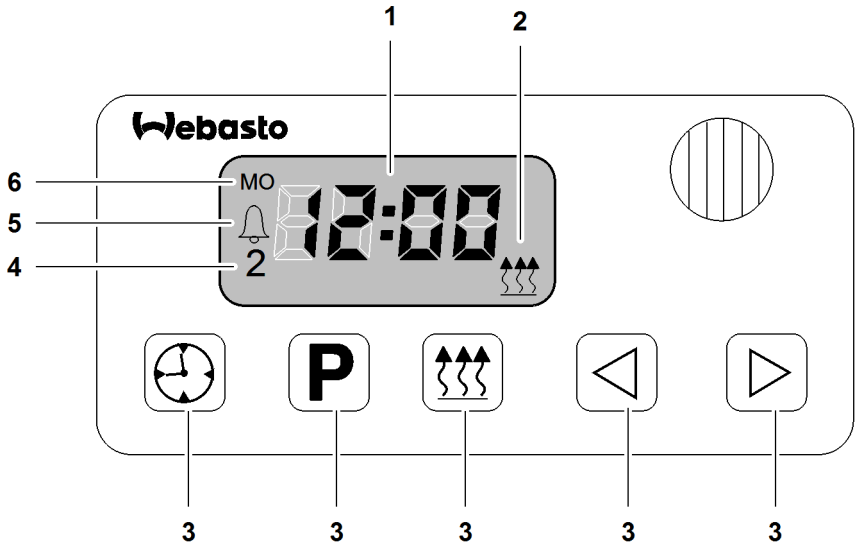

Fig. 2105: Auxiliary heating control unit

1	Time display	**4**	Code number memory
2	Status display	**5**	Alarm indicator
3	Button	**6**	Day

Time

Program

Immediate heating

Back

Next

LWN/LR.x/V03.01//Auslieferung/2015-06-03/en

copyright by
LIEBHERR

3.30 Video monitoring system*

3.30.1 Quad monitor

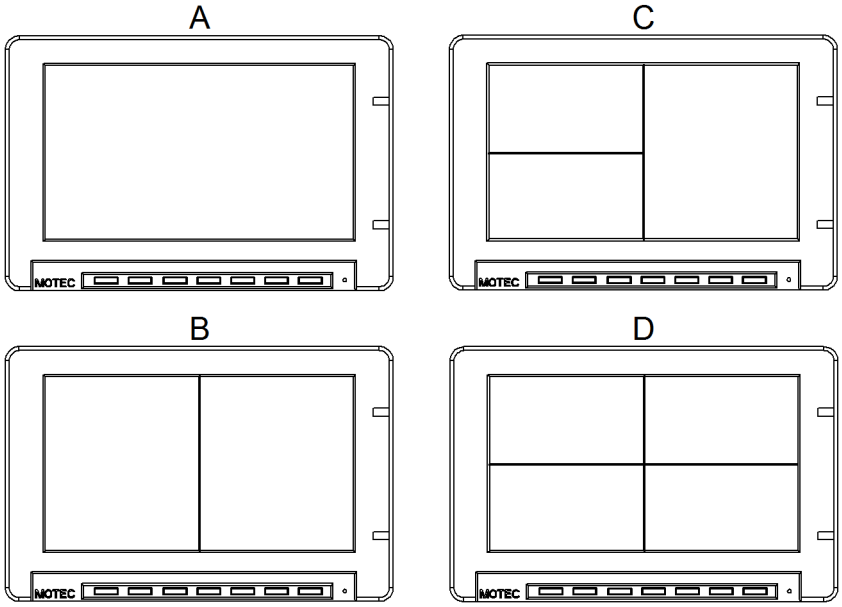

Fig. 2111: Quad monitor

A Single image mode
B Split image mode
C Three-image mode
D Four-image mode

Monitor

Turn the monitor on or off.

Calling up and switching the menu

Switch between the following menu items:
– Color
– Brightness
– Contrast
– Volume
– Language
– Standard (reset to factory setting)

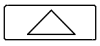

Plus

Move values up.

Minus

Move values down.

Day/night mode

Switch monitor between day mode and night mode.

Camera switching

Switch between the cameras.

In single image mode, switch between the following camera images:
– Camera 1
– Camera 2
– Camera 3

LWN/LR.x/V03.01//Auslieferung/2015-06-03/en

copyright by
LIEBHERR

– Camera 4

In split image mode, switch between the following camera images:
– Camera 1 and camera 2
– Camera 2 and camera 3
– Camera 3 and camera 4
– Camera 4 and camera 1

This button has no function in 3-image and 4-image mode.

MODE

Image mode

Switch between image modes:
– Single image mode
– Split image mode
– Three-image mode
– Four-image mode

3.30.2 Control panel zoom camera

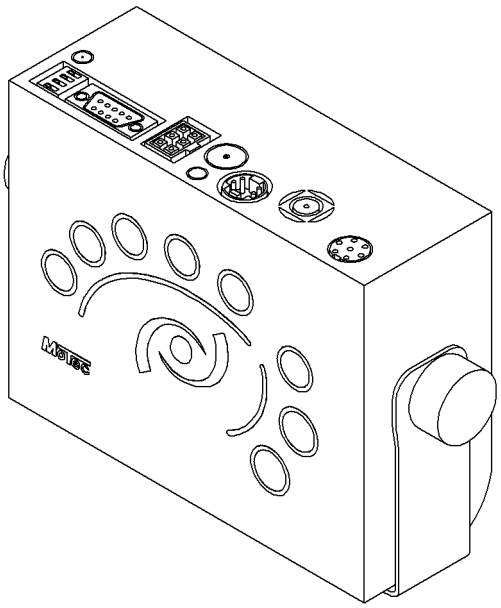

Fig. 2119: Control panel zoom camera

Video monitoring system

Turn the video surveillance system on or off.

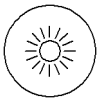

Gain

Turn the camera brightness on or off.

▷F1

Automatic focus/function button

Turn the automatic focus of the camera on or off.

Function button in combination with other buttons.

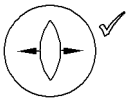

Manual focus

Focus the camera image.

Function button in combination with other buttons.

LWN/LR.x/V03.01//Auslieferung/2015-06-03/en

copyright by
LIEBHERR

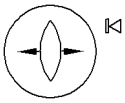

Manual focus

Focus the camera image.

Function button in combination with other buttons.

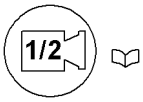

Camera selector switch

Switch from zoom camera (camera 1) to optional camera (camera 2).

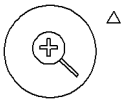

Zoom out

Zoom the camera image out.

Function button in combination with other buttons.

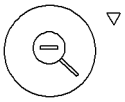

Zoom in

Zoom the camera image in.

Function button in combination with other buttons.

LWN/LR.x/V03.01//Auslieferung/2015-06-03/en

copyright by
LIEBHERR

3.31 Central lubrication*

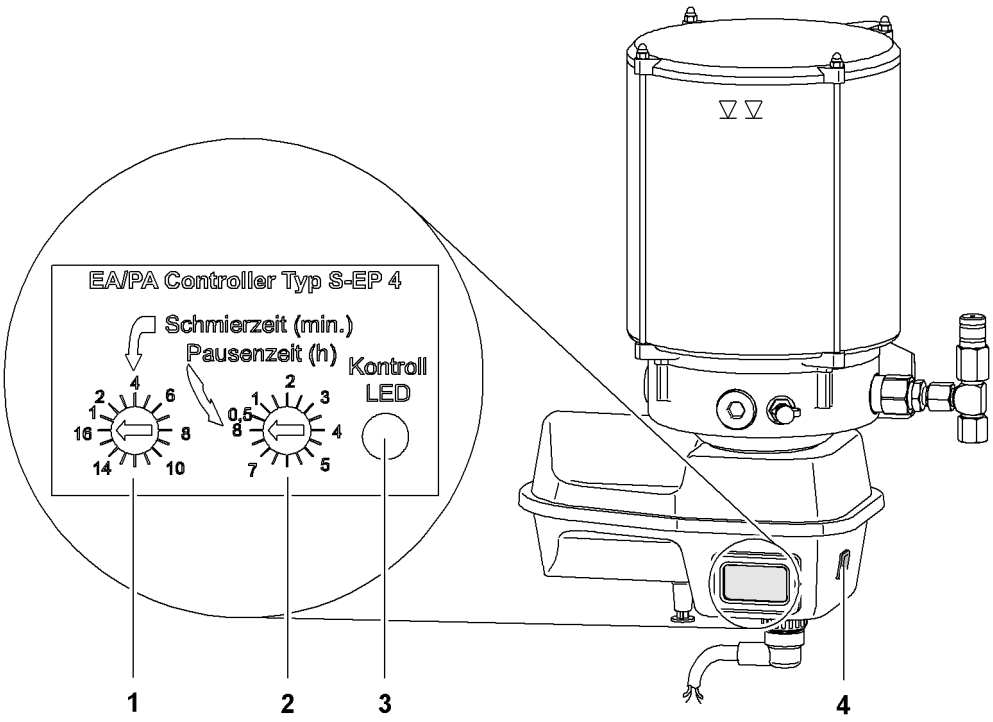

Fig. 2128: Central lubrication operating elements

1	*Set lubrication time* rotary control knob	**3**	Yellow indicator light
2	*Set pause time* rotary control knob	**4**	*Interim lubrication* button

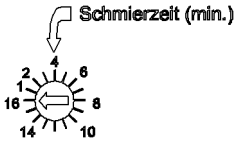

Set lubrication time

Set lubrication interval.

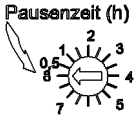

Set pause time

Set pause interval.

Yellow indicator light

Lights up for 1.5 seconds after the ignition is switched on to signal that the control system is ready for operation.

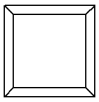

Interim lubrication

Perform interim lubrication.

LWN/LR.x/V03.01//Auslieferung/2015-06-03/en

copyright by
LIEBHERR

3.32 Additional floodlights*

3.32.1 Cabin

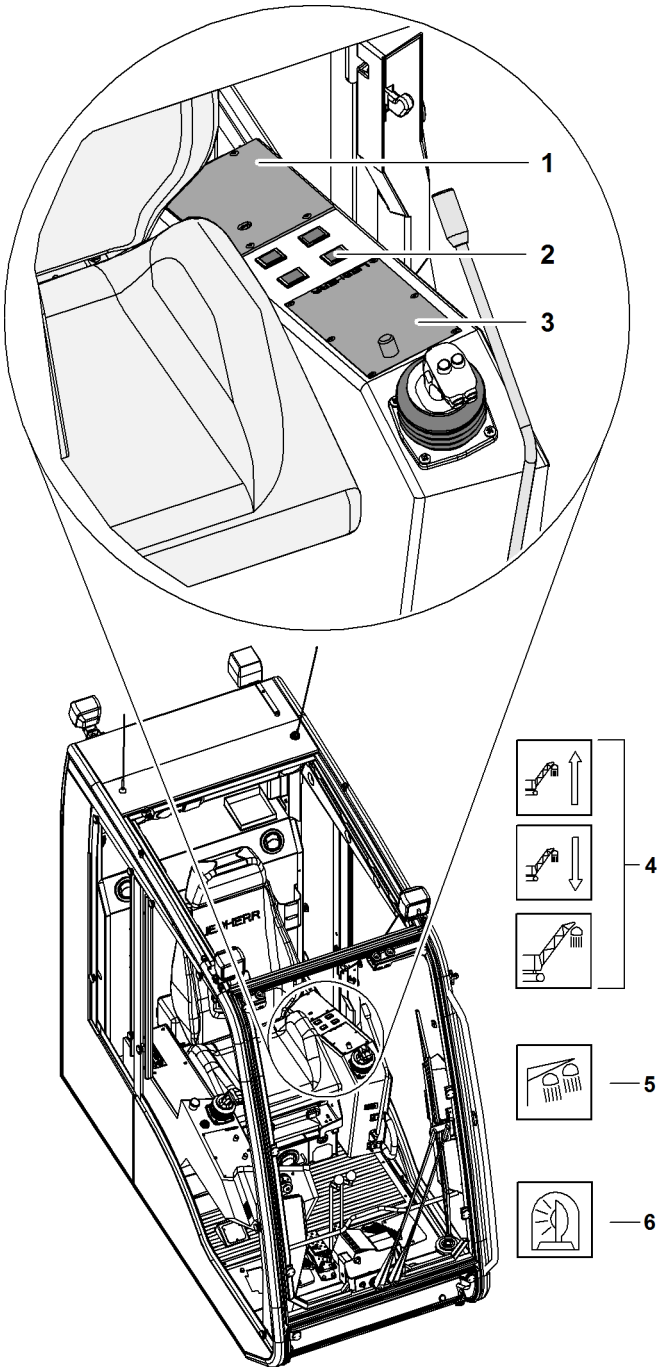

Fig. 2133: Buttons Additional floodlights

1	Control panel *X12*	**4**	Button *Floodlight main boom base section* (3x)
2	Buttons *Additional floodlights*	**5**	Button *Boom searchlight*
3	Control panel *X11*	**6**	Button *Obstacle warning light*

LWN/LR.x/V03.01//Auslieferung/2015-06-03/en

copyright by
LIEBHERR

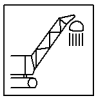

Boom base section floodlights

Turn the floodlight on the main boom base section on or off.

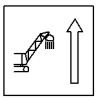

Move the floodlights upwards

Move the floodlight in the main boom base section upwards.

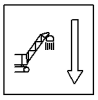

Move the floodlights downwards

Move the floodlight in the main boom base section downwards.

Boom floodlight

Turn all boom floodlights on or off.

Obstacle warning light

Activates/deactivates the obstacle warning light.

3.32.2 Search floodlight

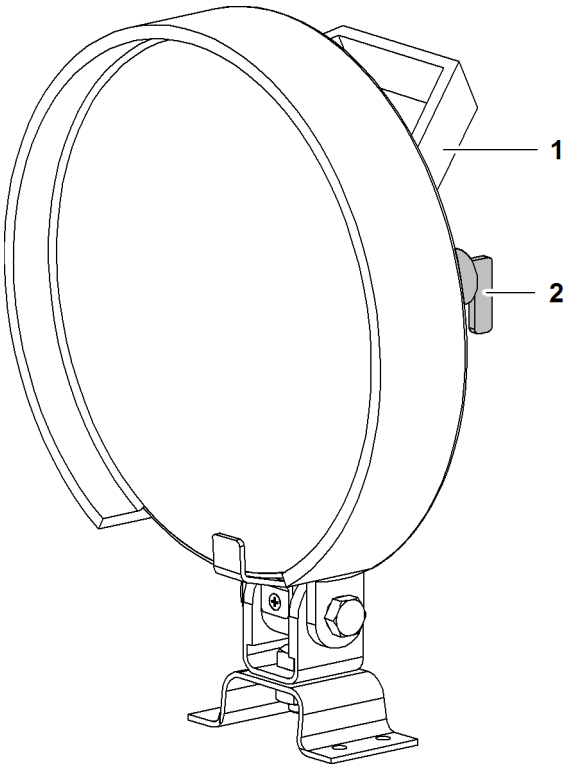

Fig. 2139: Search floodlights on uppercarriage

1 Handle

2 Switch *search floodlight*

Switch search floodlight

Turn the search floodlight on or off.

The button *Uppercarriage floodlights* on control panel *X11* must be turned on for the search floodlight function.

LWN/LR.x/V03.01//Auslieferung/2015-06-03/en

copyright by
LIEBHERR

Operation 4

4 Operation

4 Operation

The chapter **Handling** deals with the following issues:
– Secondary machine functions

The chapter **Operation** deals with the following issues:
– Safe commissioning of the machine
– Main machine functions
– Safe shutdown of the machine

4.1 Checks before start up

DANGER
Unauthorized use of a damaged machine!

▶ Do not use a machine that is damaged in any way.

▶ All defects and errors are to be reported to the relevant supervisor and to Liebherr after sales service.

NOTICE
Do not use a preserved machine if it has been preserved for storage for up to/more than 7 months!
Damage to machine.

▶ Ensure that the machine is treated with permitted lubricants.

▶ Ensure that all oil levels are correct.

Ensure that the following conditions are fulfilled:
❑ All maintenance and inspection work was carried out according to specifications.
❑ The operating manual has been read and understood.
❑ The operating manual is ready to hand in the cabin.
❑ The current load chart needed to operate the machine is ready at hand in the cabin.

4.1.1 Walk round

Before each start-up, an inspection of the machine must be carried out as follows:
– Check for any leaks (hydraulic, engine and gearbox oil, coolant, fuel).
– Check for any (deliberate) damage.
– Check for excess dirt on the machine.
– Check that all safety devices are in place.
– Check that all pin and screw connections are securely tightened.
– Check that ropes and pulleys do not show any sign of wear.
– Check that there are no obstacles in the work area.

LWN/LR.x/V03.01//Auslieferung/2015-06-03/en

copyright by LIEBHERR

- Check that the uppercarriage can be rotated as required.
- Boom cannot touch any overhead power lines.
- Check that all safety signs are present and legible.
- Check that all fire extinguishers are available and ready for operation (seals intact, inspection date has not expired) and freely accessible at all time (no ladder or locked door prevents access).
- Check that snow and ice have been removed from the cabin, uppercarriage, crawler side frames, platforms, limit switches, ropes, rope drums, pulleys and also, where possible, from the booms.
- Check that there is good visibility from the cab. Check that all windows and mirrors are clean and properly adjusted.
- Check that mechanical boom angle indicator on main boom base section or on A-frame1 moves freely.
- Complete safety equipment is installed and functioning properly.

4.1.2 Checking the battery main switch

NOTICE
Battery main switch is switched off while the machine is in use!
Damage to the electrical system.

▶ Only switch the battery main switch off when the machine is switched off.

▶ Check the battery main switch.

If the battery main switch is not switched on:
▶ Switch on the battery main switch.

LWN/LR.x/V03.01//Auslieferung/2015-06-03/en

copyright by
LIEBHERR

4.2 Start-up

4.2.1 Adjusting the operator's seat

▶ Check the seat position and adjust if necessary.

Note

Liebherr recommends:
▶ use the safety belt while the machine is in operation.

4.2.2 Switching on the ignition

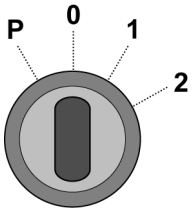

▶ Insert ignition key in ignition lock and turn to position “1”.
▷ *Start* screen is displayed on the monitor.
▷ The *Setup* screen appears once the Litronic control system is operational.

Troubleshooting
Error message appears?
Voltage drops during the start-up process may cause error messages to appear on the monitor.

▶ Switch ignition off and leave it off for at least 10 seconds.

▶ Turn ignition key to position “1” again.

Troubleshooting
Error message appears after several attempts?

▶ Contact Liebherr customer service.

4.2.3 Confirming the existing setup

The last defined *setup* screen appears on the monitor.

▶ Check all values and change to the current setup where necessary (For more information see: 4.13 Programming the setup, page 870) .

▶ Confirm the setup.
▷ The *Operation* screen is displayed on the monitor.

LWN/LR.x/V03.01//Auslieferung/2015-06-03/en

copyright by
LIEBHERR

4.2.4 Checking the fuel fill level

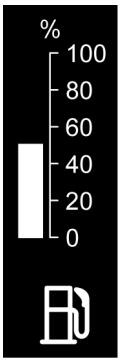

The current fuel fill level is displayed on the *Operation* screen and on the *Engine monitoring* screen.

▶ Check the fuel fill level.

If the fuel level is not sufficient:
▶ top up with fuel.

4.2.5 Checking the urea solution fill level

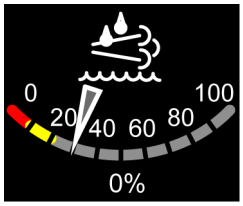

The urea solution fill level indicator is shown on the *Aggregate* screen.

▶ Check the urea solution fill level.

If the urea solution fill level is not sufficient:
▶ top up with urea solution.

4.2.6 Checking the hydraulic oil tank gate valve

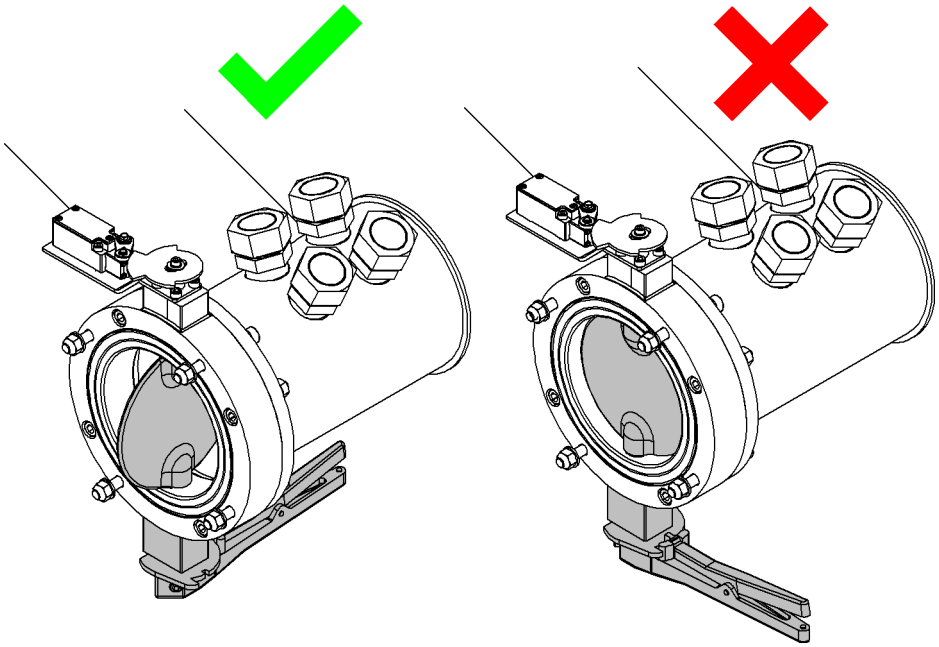

Fig. 2143: Checking the hydraulic oil tank gate valve

With closed gate valve of *hydraulic oil tank* the diesel engine cannot be started.

▶ Check the gate valve of the *hydraulic oil tank*.

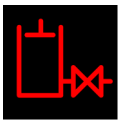

If the symbol *Gate valve hydraulic oil tank* blinks on screen:
▶ Open gate valve of the *hydraulic oil tank*.

LWN/LR.x/V03.01//Auslieferung/2015-06-03/en

4.2.7 Starting the diesel engine

NOTICE
Starting aids contain ether!
Damage to the diesel engine.

▶ Do not use any starting aids containing ether.

Ensure that the following conditions are fulfilled:
- ❑ Pre-start checks were carried out.
- ❑ No one other than the machine operator is on the machine or within the danger zone around the machine.
- ❑ Safety lever is pulled up.
- ❑ All emergency stops are unlocked.
- ❑ *Operation* screen is displayed on the monitor.
- ❑ Uppercarriage door, cabin door and cabin windows are closed.
- ❑ Communication between machine operator, slinger and signalman is ensured.

Fig. 2145: Symbol Diesel engine (lit green)

The *Diesel engine* symbol appears on the monitor after the ignition is switched on. At low outside temperatures, the diesel engine is automatically preheated by the flame start system and made ready to start. If the *Diesel engine* symbol is lit green, the machine is ready to start.

NOTICE
Ignition process too long!
Damage to the starter motor.

▶ Hold the ignition key in position “2” for a maximum of 10 seconds.

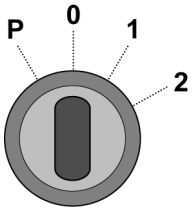

▶ Briefly turn the ignition key to position “2”.

When the diesel engine has started:
▶ release the ignition key.
  ▷ The symbol *Diesel engine* disappears on screen.

Troubleshooting
The engine has not started successfully?

▶ Wait for at least 20 seconds.

▶ Repeat the start-up process.

LWN/LR.x/V03.01//Auslieferung/2015-06-03/en

copyright by
LIEBHERR

4.2.8 Adjusting the RPM of the diesel engine

NOTICE
Warm-up period of the diesel engine too short!
Damage to the diesel engine.

▶ The diesel engine should be allowed a short warm-up period before being subjected to full load.

The current RPM is displayed on the *Operation* screen and on the *Engine monitoring* screen.

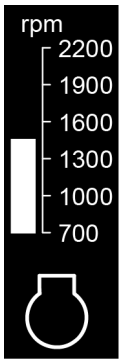

Fig. 2147: Screen section RPM on the screen Operation

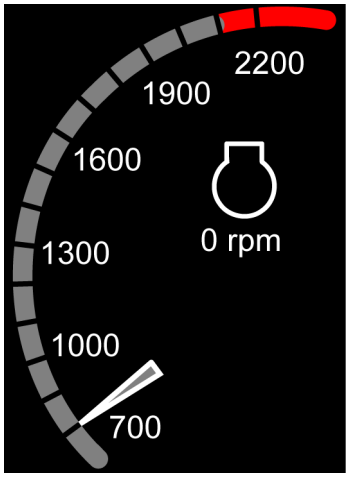

Fig. 2148: Screen section RPM on the screen Power unit

Adjusting the RPM of the diesel engine with the control lever

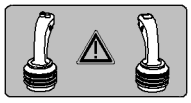

Procedure on a machine with two multi-directional control levers

LWN/LR.x/V03.01//Auslieferung/2015-06-03/en

copyright by
LIEBHERR

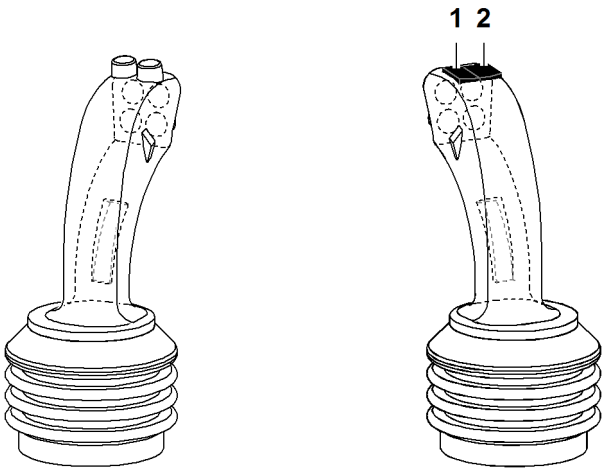

Fig. 2150: Adjusting the RPM of the diesel engine with the multi-directional control lever

1 Button *increase RPM* **2** Button *decrease RPM*

The *Increase RPM* **1** and *Decrease RPM* **2** buttons adjust the RPM from idle to maximum.

▶ Press and hold the *Increase RPM* **1** button on the right multi-directional control lever.
▷ The diesel engine RPM increases.

▶ Press and hold the *Decrease RPM* **2** button on the right multi-directional control lever.
▷ The diesel engine RPM decreases.

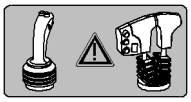

Procedure on a machine with a multi-directional control lever and a double T-lever.

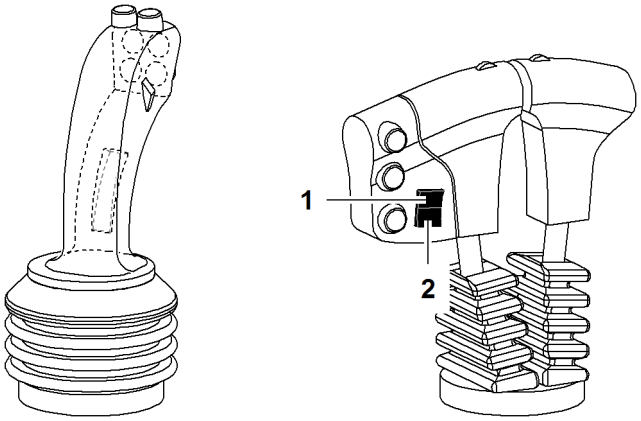

Fig. 2152: Adjusting the RPM of the diesel engine with the double T-lever

1 Button *increase RPM* **2** Button *decrease RPM*

The *Increase RPM* **1** and *Decrease RPM* **2** buttons adjust the RPM from idle to maximum.

▶ Press and hold the *Increase RPM* **1** button on the right double T-lever.
▷ The diesel engine RPM increases.

▶ Press and hold the *Decrease RPM* **2** button on the right double T-lever.
▷ The diesel engine RPM decreases.

LWN/LR.x/V03.01//Auslieferung/2015-06-03/en

copyright by
LIEBHERR

Adjusting the RPM of the diesel engine with the foot pedal

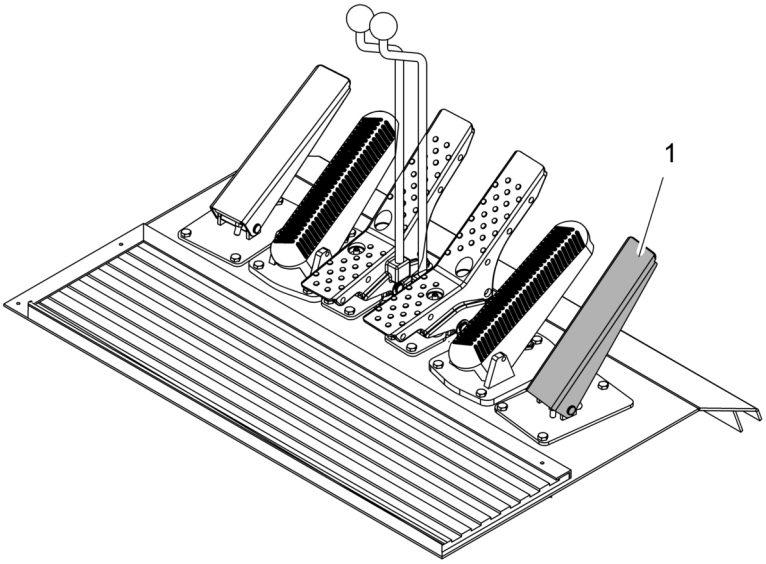

Fig. 2153: Adjusting the RPM of the diesel engine with the foot pedal

1 Foot pedal for *RPM*

The foot pedal *RPM* **1** serves to adjust the RPM from a set constant engine RPM or from idling RPM up to maximum RPM. The constant engine RPM remains stored in memory.

▶ Press the foot pedal for *RPM* **1** downwards.
  ▷ The diesel engine RPM increases.

▶ Release the foot pedal for *RPM* **1**.
  ▷ The diesel engine RPM decreases until it reaches the set constant RPM value or idle value.

4.2.9 Setting the constant engine RPM

Note
Efficient operation of the diesel engine:

▶ Ensure that the constant engine RPM is at least 1400 min^{-1} (1400 rpm).

A specific RPM value can be selected from across the entire speed range and stored in the memory.

Procedure on a machine with two multi-directional control levers

LWN/LR.x/V03.01//Auslieferung/2015-06-03/en

copyright by
LIEBHERR

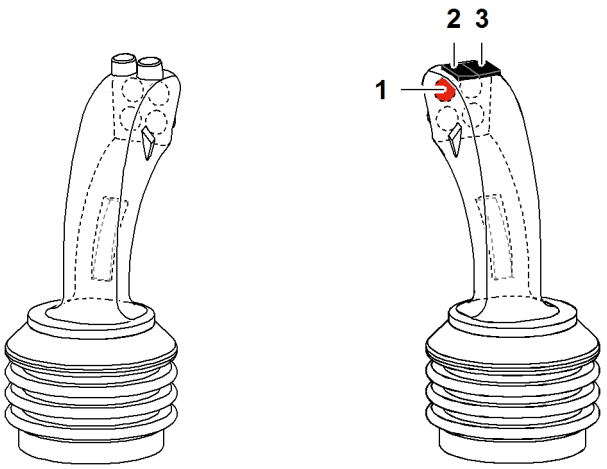

Fig. 2155: Setting a constant engine RPM using the multi-directional control lever

1 Button *Save/delete constant engine RPM*
2 Button *increase RPM*
3 Button *decrease RPM*

▶ Set the required RPM using the *Increase RPM* **2** and *Decrease RPM* **3** buttons on the right multi-directional control lever.

Once the required RPM has been reached:
▶ Press the button *Save/delete constant engine RPM* **1** on the right multi-directional control lever.
▷ The input is confirmed by a short signal tone and is saved.

Deleting the set constant engine RPM:
▶ Press the button *Save/delete constant engine RPM* **1** on the right multi-directional control lever.

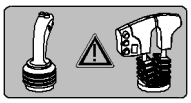

Procedure on a machine with a multi-directional control lever and a double T-lever.

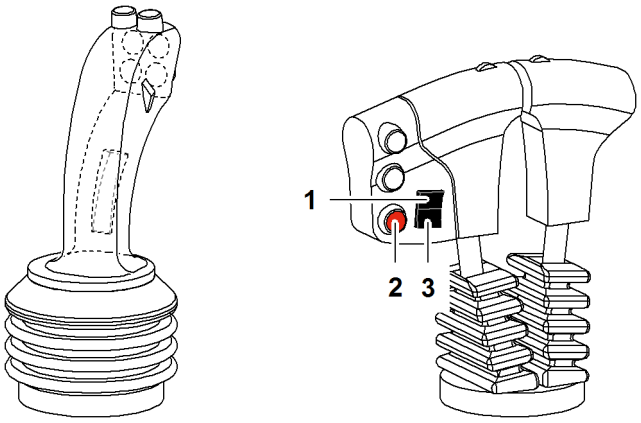

Fig. 2157: Setting the constant engine RPM using the double T-lever

1 Button *increase RPM*
2 Button *Save/delete constant engine RPM*
3 Button *decrease RPM*

▶ Set the required RPM using the *Increase RPM* **1** and *Decrease RPM* **3** buttons on the right double T-lever.

LWN/LR.x/V03.01//Auslieferung/2015-06-03/en

copyright by
LIEBHERR

Once the required RPM has been reached:

▶ Press the button *Save/delete constant engine RPM* **2** on the right double T-lever.
  ▷ The input is confirmed by a short signal tone and is saved.

Deleting the set constant engine RPM:

▶ Press the button *Save/delete constant engine RPM* **2** on the right double T-lever again.

4.2.10 Lowering the safety lever

WARNING
Improper use of the operating elements!
Severe injury.

▶ The operating elements must only be operated from the operator's seat.

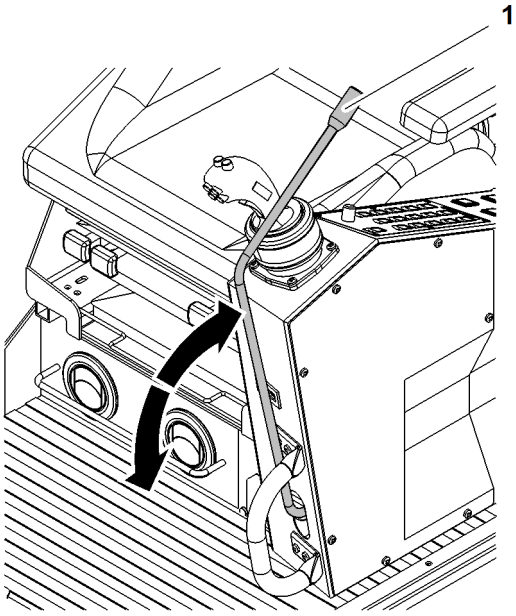

Fig. 2158: Lowering the safety lever

1 Safety lever

▶ Move into sitting position in cabin.

▶ Lower the safety lever **1**.
  ▷ Operating elements in cabin are enabled.

4.2.11 Checking the tilting-back support cylinder

The switch *Extend tilting-back support cylinder* switch on control panel *X12* must be lit.

▶ Check the *Extend tilting-back support cylinder* switch on control panel *X12*.

If the switch *Extend tilting-back support cylinder* switch on control panel *X12* is not lit:

▶ Press the *Extend tilting-back support cylinder* switch on control panel *X12*.

LWN/LR.x/V03.01//Auslieferung/2015-06-03/en

copyright by LIEBHERR

4.3 Control panels

4.3.1 Setting control panel *X25** or control panel *X26**

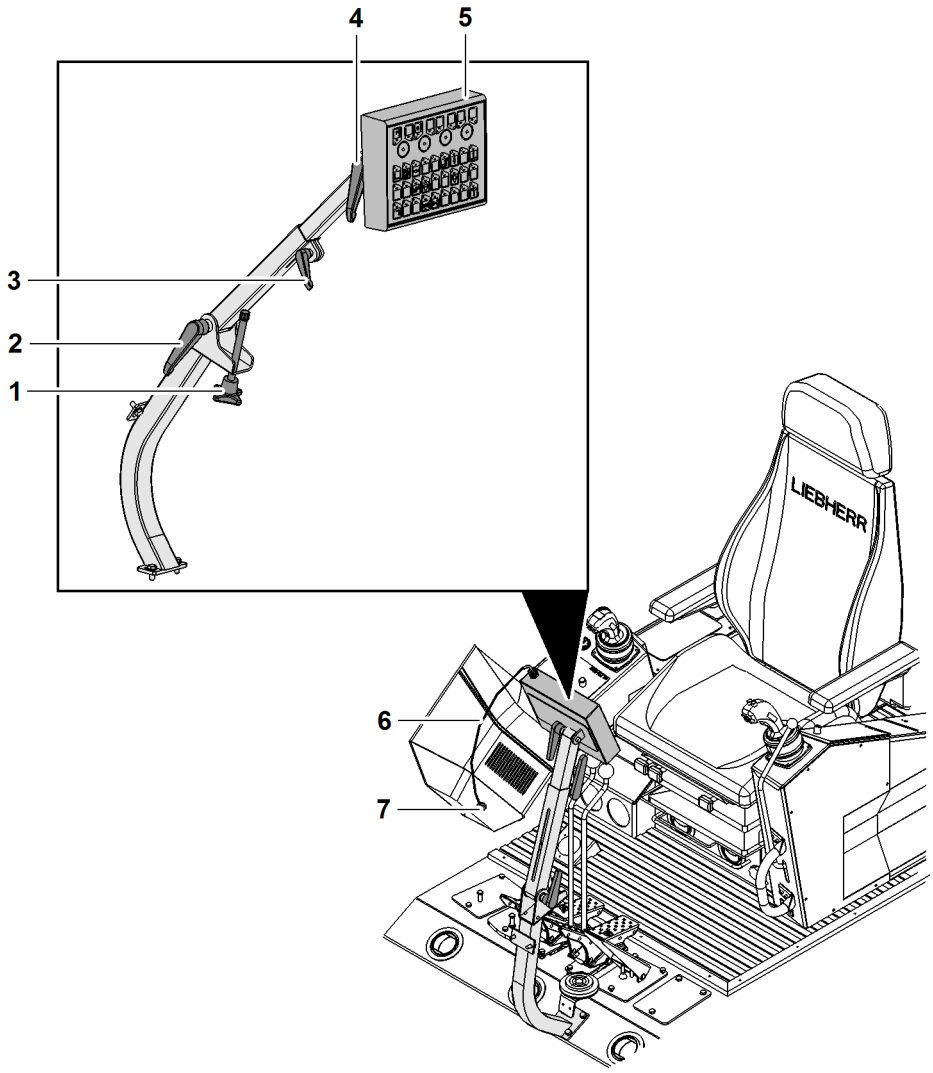

Fig. 2160: Setting control panel X25 or control panel X26

1	Inclination adjuster of the support	**5**	Control panel *X25* or control panel *X26*
2	Clamping device inclination adjuster	**6**	Cable for control panel *X25* or control panel *X26*
3	Clamping device height adjuster of support	**7**	Socket on the monitor for control panel *X25* or control panel *X26*
4	Clamping device inclination adjustment control panel		

Clamping devices

The clamping devices **2 + 3 + 4** are ratchets and can be turned in any desired position.

▶ Pull out clamping device.

LWN/LR.x/V03.01//Auslieferung/2015-06-03/en

copyright by LIEBHERR

- ▶ Turn clamping device into the desired position.
- ▶ Let go of clamping device.
  ▷ Clamping device engages.

Mount

Adjusting the inclination of the support

- ▶ Undo clamping device **2**.
- ▶ Turn inclination adjuster **1** until the desired position has been reached.
- ▶ Tighten clamping device **2**.

Adjusting the height of the support

- ▶ Undo clamping device **3**.
- ▶ Pull out control panel *X25* or control panel *X26* **5** until the desired position has been reached.
- ▶ Tighten clamping device **3**.

Adjusting the tilt of control panel *X25* or control panel *X26*

- ▶ Undo the inclination adjuster **4**.
- ▶ Adjust control panel *X25* or control panel *X26* **5** until the desired position has been reached.
- ▶ Tighten the inclination adjuster **4**.
- ▶ Insert cable **6** into socket **7**.

LWN/LR.x/V03.01//Auslieferung/2015-06-03/en

copyright by
LIEBHERR

4.4 Operator's seat

CAUTION
Incorrect operator's seat settings!
Wrong operation of operating elements.

▶ Adjust operator's seat and control stand.

Ensure that the following conditions are fulfilled:
❑ Operating elements are easily reached.
❑ Control elements and operating elements are well-visible.

When the operator's seat is correctly adjusted and properly used, it conforms to the requirements of ISO 2631-1 for protection against whole-body vibration.

Fig. 2161: Operator's seat

1	Lever *Adjust rear seat height*	**7**	Clasp*
2	Seat belt buckle*	**8**	Lever *Adjust backrest tilt*
3	Armrest (2x)	**9**	Adjusting wheel *Adjust dampening*
4	Headrest	**10**	Lever *Adjust operator's seat horizontally*
5	Backrest	**11**	Lever *Adjust control stand horizontally*
6	Adjusting wheel *Adjust armrest* (2x)	**12**	Lever *Adjust front seat height*

LWN/LR.x/V03.01//Auslieferung/2015-06-03/en

copyright by
LIEBHERR

4.4.1 Adjusting the control stand horizontally

Ensure that the following conditions are fulfilled:
❑ Safety lever is pulled up.

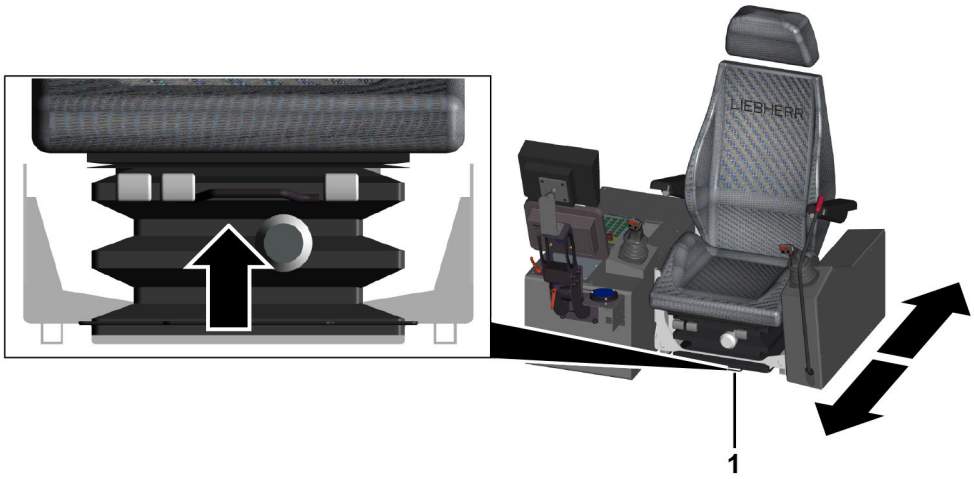

Fig. 2162: Adjusting the control stand horizontally (illustration of principle)

1 Lever *Adjust control stand horizontally*

▶ Pull up and hold the lever *Adjust control stand horizontally* **1**.

▶ Adjust control stand horizontally.

▶ Release the lever *Adjust control stand horizontally* **1**.
▷ Control stand engages automatically.

4.4.2 Adjusting the operator's seat

Ensure that the following conditions are fulfilled:
❑ Safety lever is pulled up.

LWN/LR.x/V03.01//Auslieferung/2015-06-03/en

copyright by
LIEBHERR

Fig. 2163: Adjusting the operator's seat horizontally

1 Lever *Adjust operator's seat horizontally*

▶ Pull up and hold the lever *Adjust operator's seat horizontally* **1**.

▶ Adjust operator's seat horizontally.

▶ Release the lever *Adjust operator's seat horizontally* **1**.
▷ Operator's seat engages automatically.

LWN/LR.x/V03.01//Auslieferung/2015-06-03/en

copyright by
LIEBHERR

Fig. 2164: Adjusting the backrest tilt

- ▶ Pull up the lever *Adjust backrest tilt*.
- ▶ Press back gently against seat back.
  - ▷ Seat back inclines backwards.
- ▶ Lower the lever *Adjust backrest tilt*.
  - ▷ Backrest tilts forward.

LWN/LR.x/V03.01//Auslieferung/2015-06-03/en

copyright by
LIEBHERR

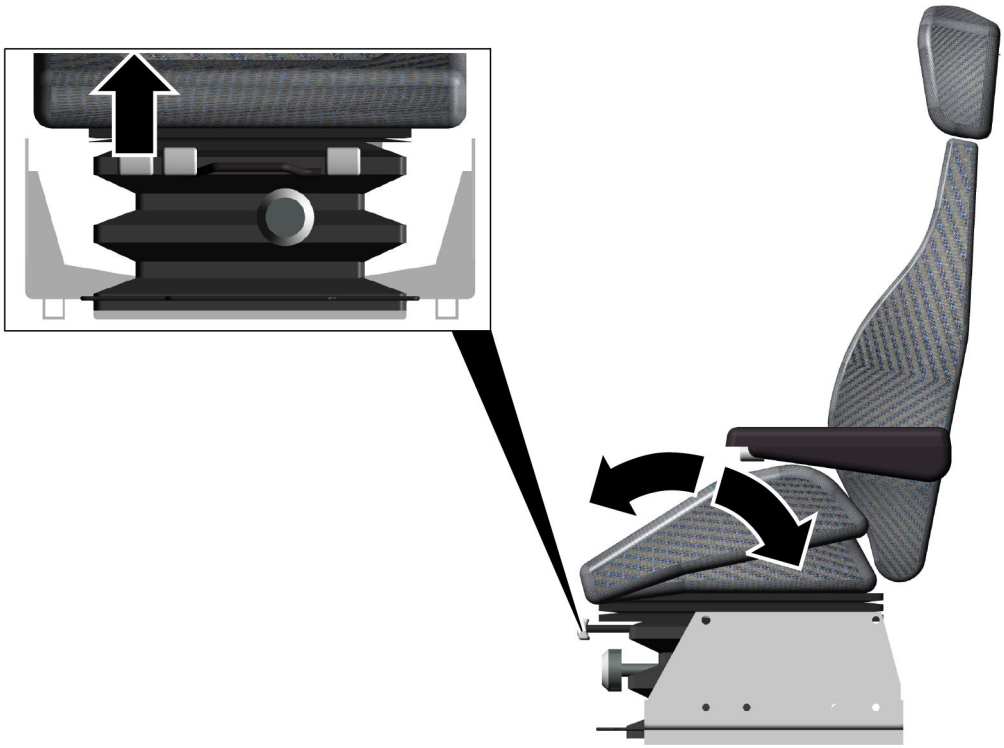

Fig. 2165: Adjusting the rear seat height

▶ Pull up the lever *Adjust rear seat height*.

▶ Adjust rear seat height by putting on weight or taking weight off.

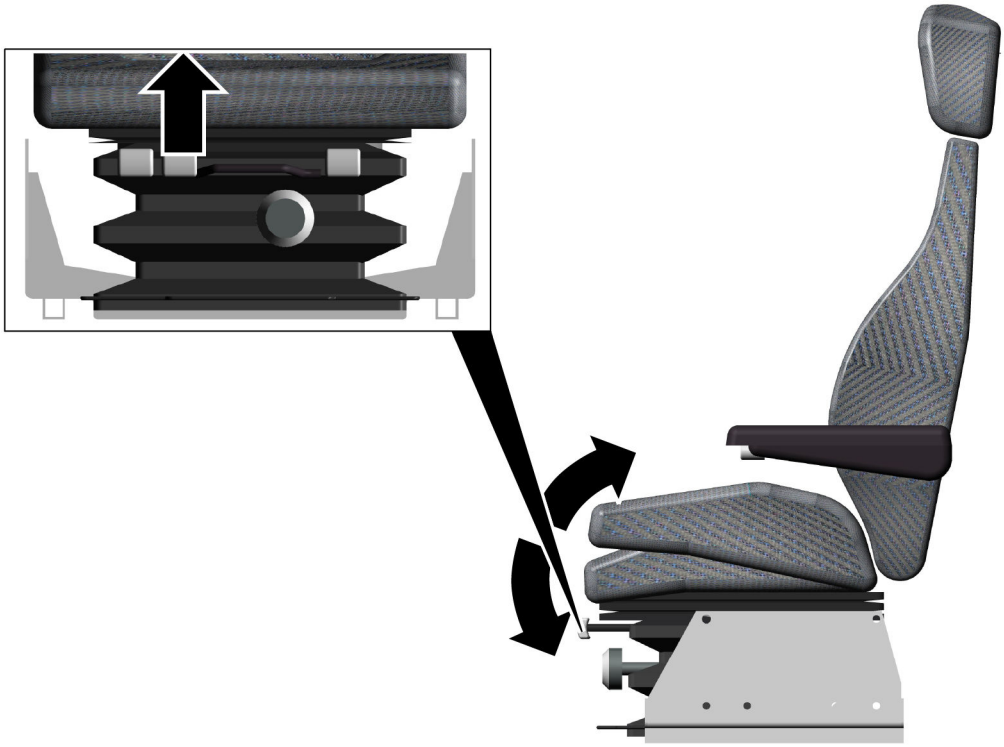

Fig. 2166: Adjusting the front seat height

▶ Pull up the lever *Adjust front seat height*.

LWN/LR.x/V03.01//Auslieferung/2015-06-03/en

copyright by
LIEBHERR

▶ Adjust front seat height by putting on weight or taking weight off.

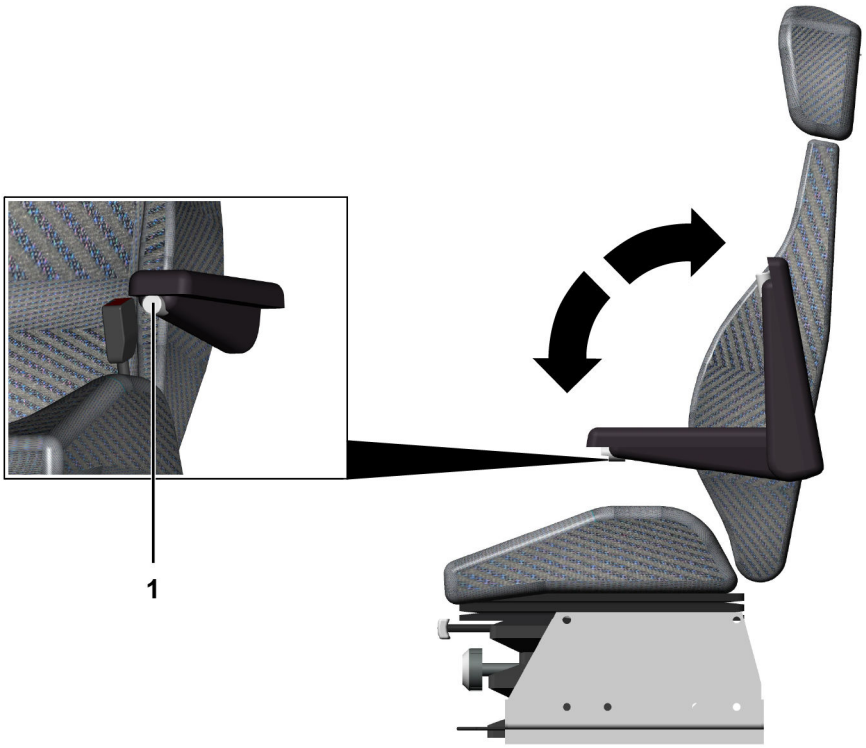

Fig. 2167: Adjusting the armrests

1 Adjusting wheel *Adjust armrest* (2x)

▶ Adjust armrest.

▶ Turn adjusting wheel *Adjust armrest* **1** clockwise.

▶ Repeat procedure with second armrest.
▷ Armrests are adjusted.

LWN/LR.x/V03.01//Auslieferung/2015-06-03/en

copyright by
LIEBHERR

4.4.3 Adjusting the dampening

Fig. 2168: Decreasing the dampening

▶ Decreasing the dampening: Turn adjusting wheel *Adjust dampening* clockwise.
  ▷ Dampening is decreased.

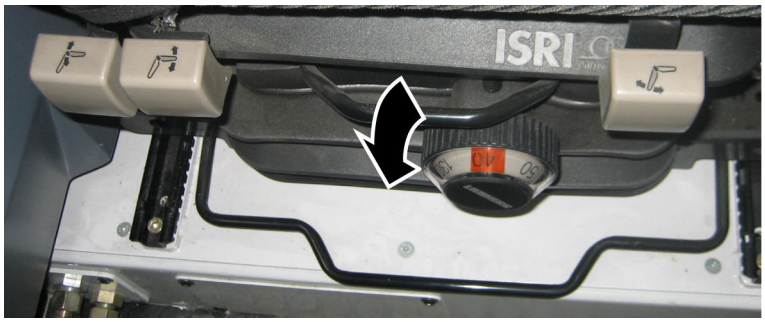

Fig. 2169: Increasing the dampening

▶ Increasing the dampening: Turn adjusting wheel *Adjust dampening* counter-clockwise.
  ▷ Dampening is increased.

4.4.4 Adjusting the ergonomics*

The operator's seat with air suspension has two air chambers that can be filled or emptied separately.

The operator's seat with seat heating* has heaters in the seat cushion and in the backrest.

LWN/LR.x/V03.01//Auslieferung/2015-06-03/en

copyright by
LIEBHERR

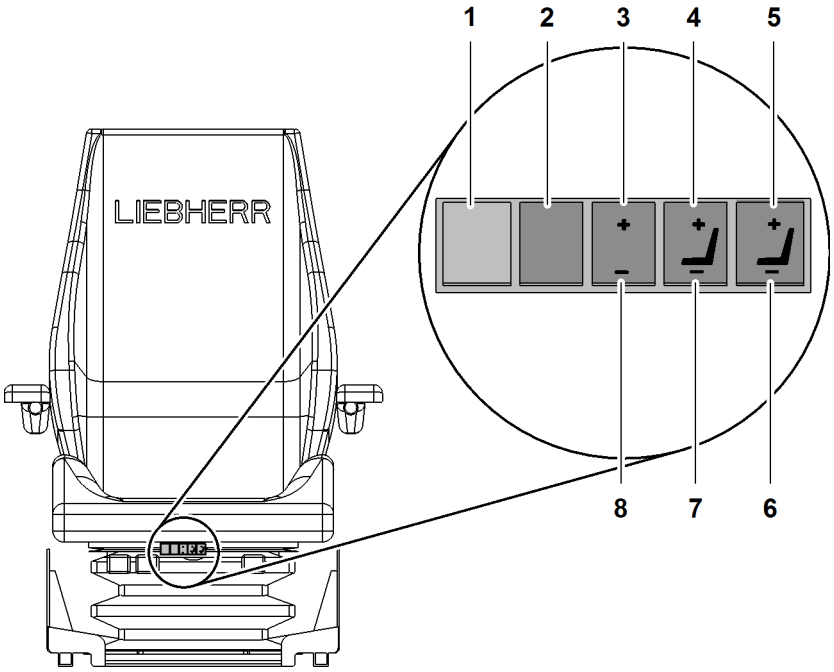

*Fig. 2170: Adjusting the ergonomics**

1	[not used]	**5**	Button *Increase top lumbar vertebrae support*
2	Button *Seat heating*	**6**	Button *Decrease top lumbar vertebrae support*
3	Button *Increase weight*	**7**	Button *Decrease bottom lumbar vertebrae support*
4	Button *Increase bottom lumbar vertebrae support*	**8**	Button *Decrease weight*

Turning the seat heating on or off

▶ Press the button *Seat heating* **2** on the operator's seat.
▷ Seat heating is switched on.

▶ Press the button *Seat heating* **2** on the operator's seat again.
▷ Seat heating is switched off.

Increasing or decreasing the weight

▶ Press the button *Increase weight* **3** on the operator's seat.
▷ Weight is being increased.

▶ Press the button *Decrease weight* **8** on the operator's seat.
▷ Weight is being decreased.

Increasing or decreasing the lumbar vertebrae support

▶ Press the button *Increase bottom lumbar vertebrae support* **4** on the operator's seat.
▷ Bottom lumbar vertebrae support is being increased.

▶ Press the button *Decrease bottom lumbar vertebrae support* **7** on the operator's seat.
▷ Bottom lumbar vertebrae support is being decreased.

▶ Press the button *Increase top lumbar vertebrae support* **5** on the operator's seat.
▷ Top lumbar vertebrae support is being increased.

LWN/LR.x/V03.01//Auslieferung/2015-06-03/en

copyright by
LIEBHERR

▶ Press the button *Decrease top lumbar vertebrae support* **6** on the operator's seat.
▷ Top lumbar vertebrae support is being decreased.

4.4.5 Safety belt*

Fig. 2171: Safety belt

1	Belt buckle	**2**	Clasp

Putting on safety belt

In case of abrupt movement, the bet retractor blocks so that the belt cannot be pulled out further.

The belt has an automatic belt tightener.

It is not necessary to adjust the belt length.

▶ Pull belt buckle **1** out of belt retainer.

▶ Pull belt across body at height of pelvis.

▶ Insert seat belt buckle **1** into snap lock **2**.
▷ Safety belt is put on.

Releasing safety belt

▶ Press latch release on snap-lock **2**.
▷ Belt automatically winds up in belt mounting.

LWN/LR.x/V03.01//Auslieferung/2015-06-03/en

copyright by LIEBHERR

4.5 Lighting

4.5.1 Operating the floodlights on the uppercarriage

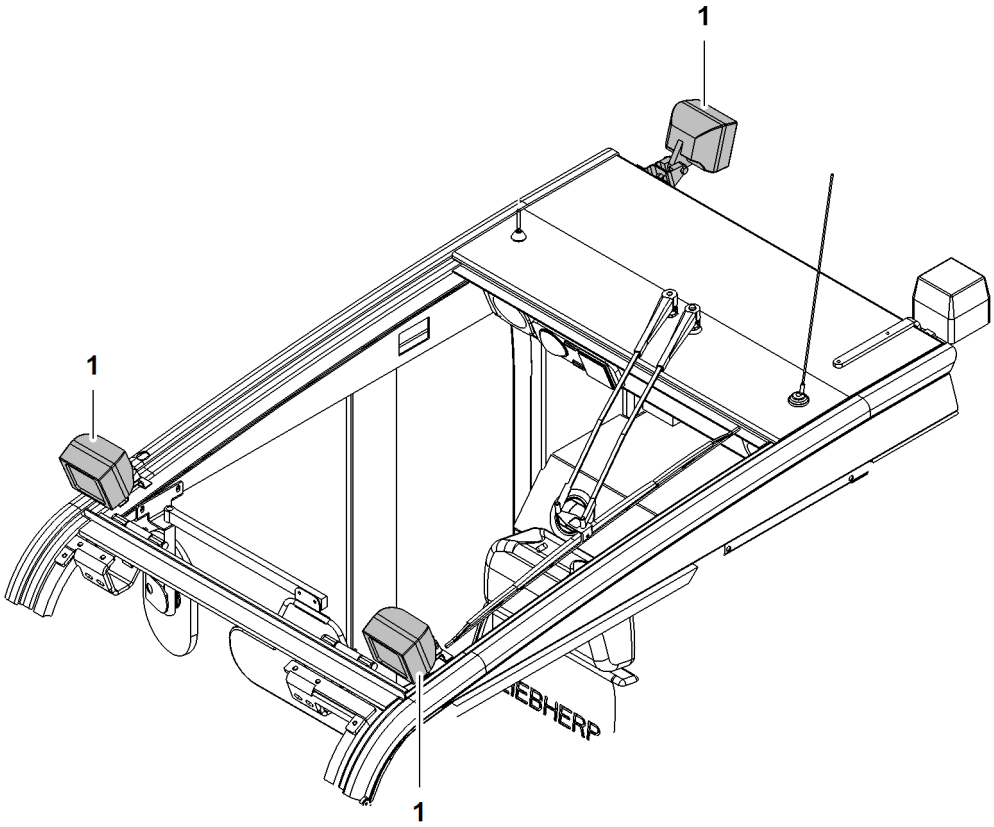

Fig. 2172: Operating the floodlights on the uppercarriage

1 Floodlights on uppercarriage

▶ Press the *Floodlights on uppercarriage* button on control panel *X11*.
▷ Floodlights on uppercarriage **1** light up.

4.5.2 Operating the additional floodlights

CAUTION
Lamps are extremely bright and very hot!
Can damage eyes and cause burns.

▶ Do not look directly into the light emitted by the floodlights.

▶ Do not touch the hot glass in front of the floodlight.

Operating the floodlights on the boom base section

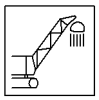

▶ Press the *Boom base section floodlights* button.
▷ The floodlights on the boom base section light up.

LWN/LR.x/V03.01//Auslieferung/2015-06-03/en

copyright by
LIEBHERR

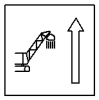

▶ Press the *Move the floodlights upwards* button.
▷ The floodlights on the boom base section move upwards.

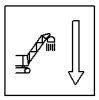

▶ Press the *Move the floodlights down* button.
▷ The floodlights on the boom base section move down.

Operating all the floodlights on the boom

▶ Press the *Boom floodlights* button.
▷ All the floodlights on the boom light up.

4.5.3 Operating the cab lighting

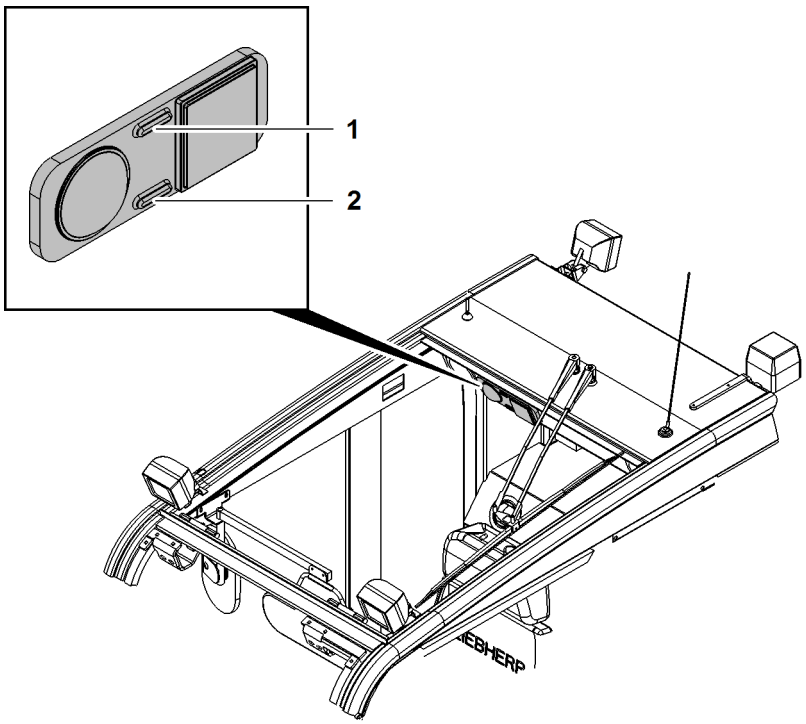

Fig. 2178: Operating the cab lighting

1 Press the reading lamp *button* **2** Press the Interior lighting *button*

The *interior lighting* is either set to “automatic”, “off” or “on”.

▶ Press the *Reading lamp* **1** button.
▷ The reading lamp is switched on.

▶ Press the *Interior lighting* **2** button.
▷ The interior lighting is switched on.

4.5.4 Operating the engine compartment lighting

▶ Press the *Engine compartment lighting* button on control panel *X11*.
▷ The work lights in the engine compartment light up.

LWN/LR.x/V03.01//Auslieferung/2015-06-03/en

copyright by
LIEBHERR

4.6 Windscreen wiper system

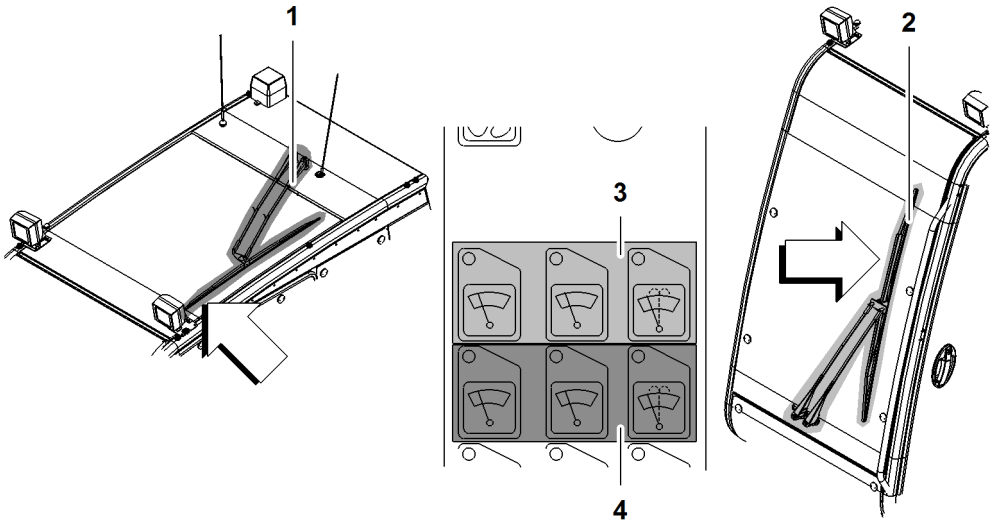

Fig. 2180: Windscreen wiper system

1	Windscreen wiper for roof window	**3**	Operating elements on control panel *X11* for front windscreen wiper
2	Windscreen wiper for front window	**4**	Operating elements on control panel *X11* for roof windscreen wiper

4.6.1 Operating the windscreen wipers

Activates/deactivates continuous mode of the windscreen wiper.

▶ Press the *Windscreen wiper* button on control panel *X11*.

▷ Continuous mode of windscreen wiper is activated.

▶ Press the *Windscreen wiper* button on control panel *X11* again.

▷ Continuous mode of windscreen wiper is deactivated.

Activates/deactivates interval mode of the windscreen wiper

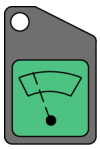

▶ Press the *Intermittent windscreen wiper* button on control panel *X11*.

LWN/LR.x/V03.01//Auslieferung/2015-06-03/en

▷ Interval mode of the windscreen wiper is activated.

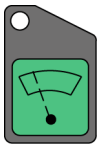

▶ Press the button *Interval mode windscreen wiper* on control panel *X11* again.

▷ Interval mode of the windscreen wiper is deactivated.

4.6.2 Operating the windscreen washer system

WARNING
Flammable fluid in windscreen washer bottle!
Fire, explosion.

▶ Fill windscreen washer bottle exclusively with non-flammable fluids.

Ensure that the following conditions are fulfilled:
❑ Container for windscreen washer system is filled.
❑ At low ambient temperatures: sufficient antifreeze for windscreen wiper system has been added.

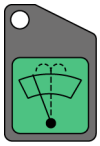

▶ Press and hold the button *Windscreen wiper system* on control panel *X11*.
▷ Windscreen wiper runs continuously and windscreen cleaning fluid is sprayed on.

LWN/LR.x/V03.01//Auslieferung/2015-06-03/en

copyright by
LIEBHERR

4.7 Ventilation, heating and air-conditioning

The following table shows the recommended settings for ventilation, heating and air conditioning.

Button ***Fan speed heating/air condi-tioning system***	**Rotary control knob** ***Tempera-ture heating/air condi-tioning system***	**Button** ***Air condi-tioning system***	**Switch** ***Recircu-lated air/ fresh air***	**Position of the air vents**		
at least level 1	all the way to the left (blue zone)	Off	as required		**Left**	**Right**
				Rear air vents	as required	as required
				Bottom air vents	as required	as required
				Front air vents	as required	as required
				Ventilation duct	as required	as required

Tab. 371: Recommended ventilation setting

Button ***Fan speed heating/air condi-tioning system***	**Rotary control knob** ***Tempera-ture heating/air condi-tioning system***	**Button** ***Air condi-tioning system***	**Switch** ***Recircu-lated air/ fresh air***	**Position of the air vents**		
at least level 1	All the way to the right (red zone)	Off	as required		**Left**	**Right**
				Rear air vents	as required	as required
				Bottom air vents	open	open
				Front air vents	open	open
				Ventilation duct	as required	as required

Tab. 372: Recommended heating setting

LWN/LR.x/V03.01//Auslieferung/2015-06-03/en

copyright by LIEBHERR

Button ***Fan speed heating/air condi-tioning system***	**Rotary control knob** ***Tempera-ture heating/air condi-tioning system***	**Button** ***Air condi-tioning system***	**Switch** ***Recircu-lated air/ fresh air***	**Position of the air vents**		
					Left	**Right**
at least level 1	all the way to the left (blue zone)	On	as required	Rear air vents	open to the top	open to the top
				Bottom air vents	closed	closed
				Front air vents	closed	open to the top
				Ventilation duct	open to the top	open to the top

Tab. 373: Recommended cooling setting

Button ***Fan speed heating/air condi-tioning system***	**Rotary control knob** ***Tempera-ture heating/air condi-tioning system***	**Button** ***Air condi-tioning system***	**Switch** ***Recircu-lated air/ fresh air***	**Position of the air vents**		
					Left	**Right**
at least level 1	all the way to the right (red zone)	On	Recircu-lated air	Rear air vents	open lateral towards window	open lateral towards window
				Bottom air vents	closed	closed
				Front air vents	open towards window	open towards window
				Ventilation duct	open towards window front	open lateral towards window

Tab. 374: Recommended dehumidification setting

LWN/LR.x/V03.01//Auslieferung/2015-06-03/en

copyright by
LIEBHERR

4.7.1 Setting the air vent

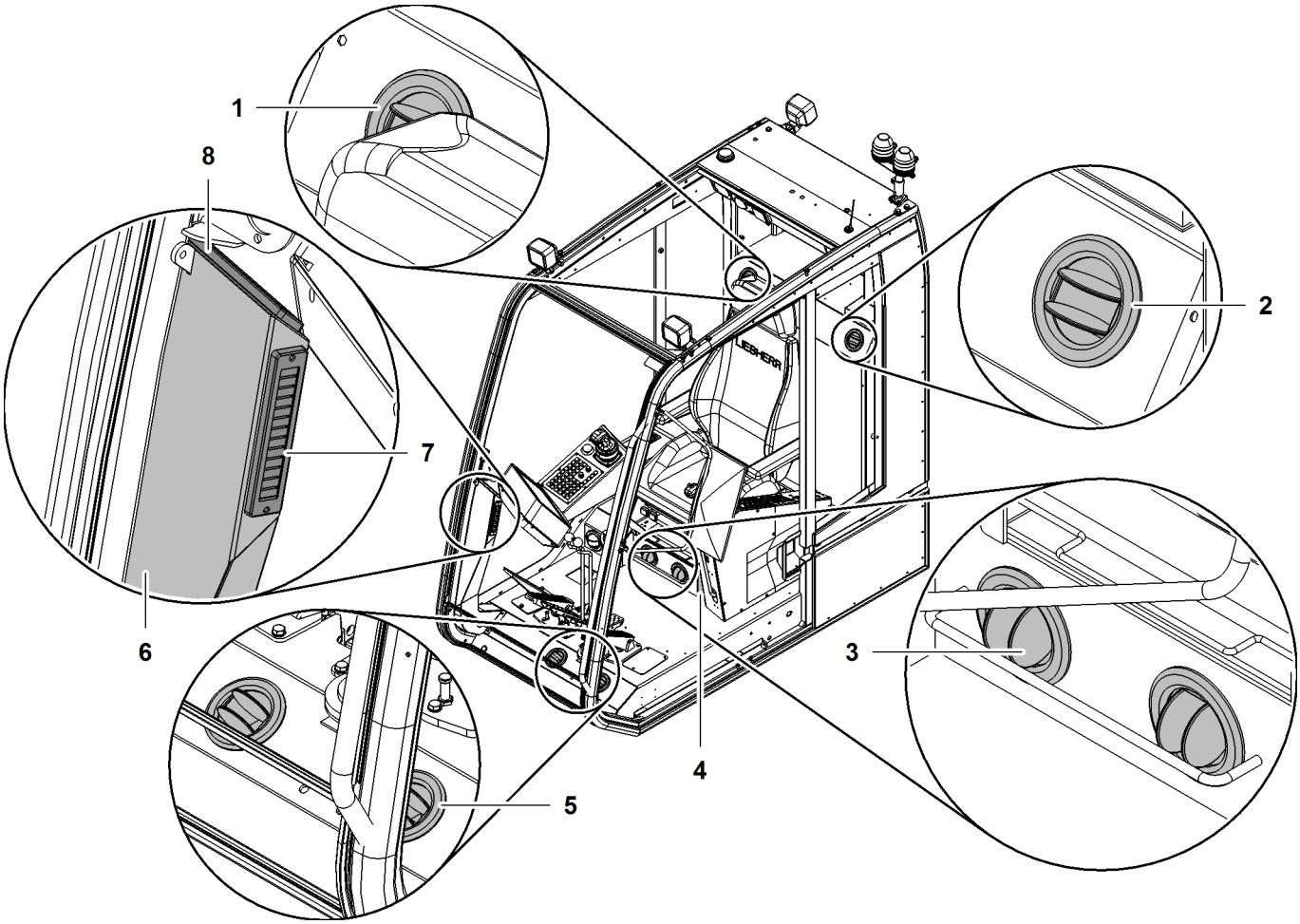

Fig. 2186: Air vent overview

1	Right rear air vent	**4**	Switch *Recirculated air/fresh air*	**7**	Lateral lamella vent
2	Left rear air vent	**5**	Front air vent (2x)	**8**	Top lamella vent
3	Bottom air vent (2x)	**6**	Ventilation duct		

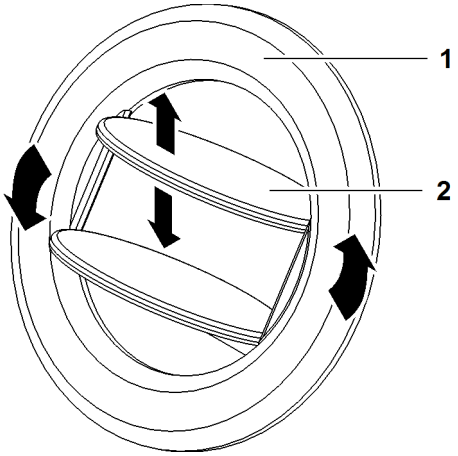

Fig. 2187: Setting the air vent

1	Ring	**2**	Flap (2x)

LWN/LR.x/V03.01/Auslieferung/2015-06-03/en

▶ Turn ring **1** into desired position.

▶ Set flaps **2** to desired position.

4.7.2 Adjusting the lamella vents

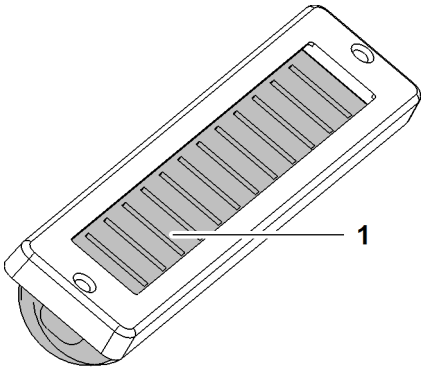

Fig. 2188: Adjusting the lamella vents

1 Lamella

▶ Turn lamella **1** into desired position.

4.7.3 Setting recirculated air or fresh air

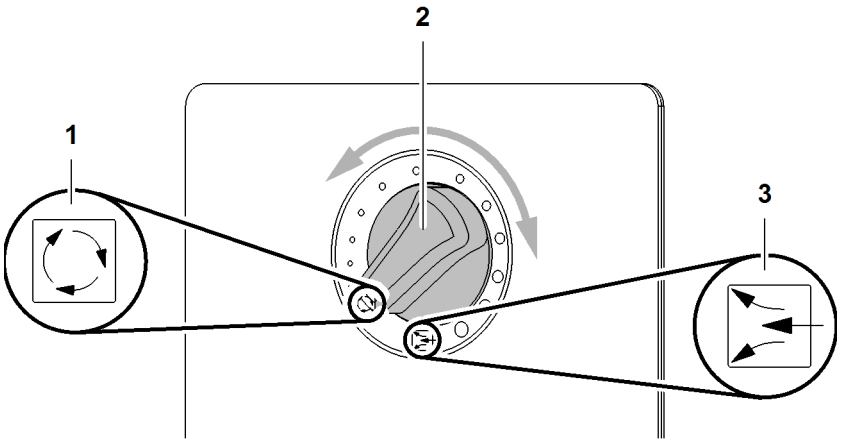

Fig. 2189: Setting recirculated air or fresh air

1 Recirculated air “position”
2 Switch *Recirculated air/fresh air*
3 Fresh air “position”

▶ Set the switch *Recirculated air/fresh air* **2** to the position “Recirculated air” **1**.
▷ The air is circulated around the cab.

▶ Set Recirculated air/fresh air *switch to* **2** Fresh air “position” **3**.
▷ The blower conveys fresh air from the outside into the cabin.

4.7.4 Operating the ventilation

The LED of the buttons indicate the selected blower level. Three different fan speeds are possible.

LWN/LR.x/V03.01//Auslieferung/2015-06-03/en

copyright by
LIEBHERR

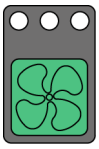

▶ Press the *Heating/air conditioning fan speed* button on control panel *X11*.
▷ The fan blows.

4.7.5 Using the heater

Ensure that the following conditions are fulfilled:
❑ Diesel engine is switched on.
❑ Ventilation is switched on.

▶ Turn the *Heating temperature/air conditioning* rotary control knob on the *X11* control panel to the right (red zone).
▷ The heating is turned up.

▶ Turn the *Heating temperature/air conditioning* rotary control knob on the *X11* control panel to the left (blue zone).
▷ The heating is turned down.

4.7.6 Turning the air conditioning system on or off

WARNING
Leaks in the air conditioning coolant circuit in an enclosed space!
Risk of suffocation.

If there is a high coolant concentration in the air:
▶ Immediately leave the closed room (cab).

CAUTION
Rotating parts!
Risk of injury to limbs.

▶ Make sure that there are no persons in the vicinity of the fan on the condenser.

Ensure that the following conditions are fulfilled:
❑ Diesel engine is switched on.
❑ Ventilation is switched on.

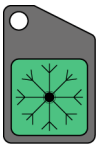

▶ Press the *Air conditioning system* button on control panel *X11*.
▷ The air conditioning is switched on.

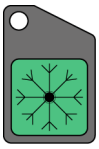

▶ Press the button *Air conditioning system* on control panel *X11* again.
▷ Air conditioning system is switched off.

LWN/LR.x/V03.01//Auslieferung/2015-06-03/en

copyright by
LIEBHERR

4.7.7 Operating the external air conditioning system*

NOTICE
Inadmissible operation of both diesel engines!
Overpressure in the cooling circuit.
Coolant leak.

▶ Ensure that only one diesel engine is in operation.

Turning the external air conditioning system* on or off

Preparing the operating of the external air conditioning system

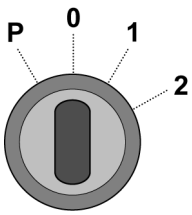

▶ Turn ignition key of machine to position “1”.

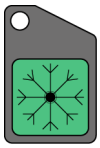

▶ Press the *Air conditioning system* button on control panel *X11*.

▶ Turn rotary control knob *Temperature heating/air conditioning system* on control panel *X11* to the left (blue zone).

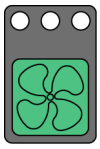

▶ Press the button *Fan speed heating/air conditioning system* on control panel *X11* until the desired fan speed is set.

▶ Set the button *Recirculated air/fresh air* beneath operator's seat to the position “Recirculated air”.

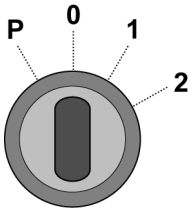

▶ Turn ignition key of machine to position “0”.
▷ Operation of the external air conditioning system has been prepared.

Turning the external air conditioning system on

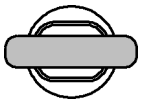

▶ Turn ignition key on control unit *External air conditioning system* to position “1”.

▷ Software version is displayed for two seconds on the display of control unit *External air conditioning system*:

```
HATZ  multiflex
S05204  43/2011
```

Fig. 2201: Software version

LWN/LR.x/V03.01//Auslieferung/2015-06-03/en

copyright by LIEBHERR

▷ Operating state before start is shown on the display of control unit *External air conditioning system*:

!!! OIL !!!	0,0 h
00°	0000

Fig. 2202: Operating state before start

The following parameters appear:
– Display top left: Error oil pressure indicator
– Display top right: Operating hours
– Display bottom left: Engine temperature
– Display bottom right: Diesel engine RPM

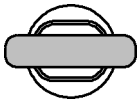

▶ Turn ignition key on control unit *External air conditioning system* briefly to position “2”.

▷ Diesel engine is switched on.
▷ External air conditioning system is in operation.
▷ Operating state after start is shown on the display of control unit *External air conditioning system*.

OIL ✓	0,0 h
25°	1000

Fig. 2204: Operating state after start

The following parameters appear:
– Display top left: Oil pressure indicator OK
– Display top right: Operating hours
– Display bottom left: Engine temperature
– Display bottom right: Diesel engine RPM

▶ Turn rotary control knob *Temperature heating/air conditioning system* on control panel *X11* to the desired temperature.

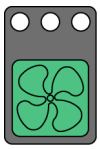

▶ Press the button *Fan speed heating/air conditioning system* on control panel *X11* until the desired fan speed is set.
▷ External air conditioning system cools down or heats up cabin to the desired temperature.

Turning the external air conditioning system off

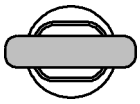

▶ Turn ignition key on control unit *External air conditioning system* to position “0”.
▷ External air conditioning system is turned off.

Setting manual start or automatic start

With manual start, the external air conditioning system can be turned on or off manually at any time with the ignition key.

With automatic start, the external air conditioning system is turned on or off automatically with the machine's diesel engine.

Make sure the following prerequisites are met:
❑ Operation of the external air conditioning system* has been prepared.

LWN/LR.x/V03.01//Auslieferung/2015-06-03/en

copyright by LIEBHERR

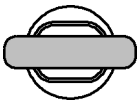

▶ Turn ignition key on control unit *External air conditioning system* to position “1”.

▷ Software version is displayed for two seconds on the display of control unit *External air conditioning system*:

```
HATZ  multiflex
S05204 43/2011
```

Fig. 2209: Software version

▷ Operating state before start is shown on the display of control unit *External air conditioning system*:

```
!!! OIL !!!      0,0 h
  00°            0000
```

Fig. 2210: Operating state before start

▶ Press button *F1* on control unit *External air conditioning system*.

▷ Start mode/daily operating hours is shown on the display of control unit *External air conditioning system*:

```
automatik
TagBSZ:      0,0 h
```

Fig. 2212: Start mode/daily operating hours

The following parameters appear:
– Top display: Automatic start
– Bottom display: Daily operating hours

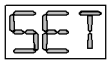

▶ Press button *SET* on control unit *External air conditioning system*.

▷ Start mode/daily operating hours is shown on the display of control unit *External air conditioning system*:

```
manuell
TagBSZ:      0,0 h
```

Fig. 2214: Start mode/daily operating hours

The following parameters appear:
– Top display = manual start
– Bottom display = daily operating hours

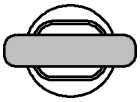

▶ Turn ignition key on control unit *External air conditioning system* to position “0”.
▷ Settings are saved.
▷ The new settings are active at the next start.

Requesting the operating hours

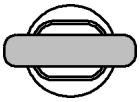

▶ Turn ignition key on control unit *External air conditioning system* to position “1”.

▷ Software version is displayed for two seconds on the display of control unit *External air conditioning system*:

LWN/LR.x/V03.01//Auslieferung/2015-06-03/en

copyright by
LIEBHERR

```
HATZ  multiflex
S05204 43/2011
```

Fig. 2217: Software version

▷ Operating state before start is shown on the display of control unit *External air conditioning system*:

```
!!! OIL !!!      0,0 h
  00°            0000
```

Fig. 2218: Operating state before start

▶ Press button *F1* on control unit *External air conditioning system*.

▷ Start mode/daily operating hours is shown on the display of control unit *External air conditioning system*:

```
manuell
TagBSZ:        0,0 h
```

Fig. 2220: Start mode/daily operating hours

The following parameters appear:
– Top display = manual start
– Bottom display = daily operating hours

▶ Press button *F1* on control unit *External air conditioning system*.

▷ Total operating time/diesel engine RPM are shown on the display of control unit *External air conditioning system*:

```
Gesamt         0,0 h
Drehzahl:      0000
```

Fig. 2222: Total operating time/diesel engine RPM

The following parameters appear:
– Top display: Total operating hours
– Bottom display: Diesel engine RPM

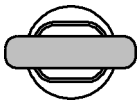

▶ Turn ignition key on control unit *External air conditioning system* to position “0”.

Operating the menu

Note
Change of basic settings!
Loss of warranty.

▶ Make sure that no basic settings are changed.

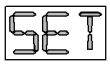

▶ Press and hold the button *SET* on control unit *External air conditioning system* and turn ignition key on control unit *External air conditioning system* to position “1”.

▷ Menu is shown on the display of control unit *External air conditioning system*:

LWN/LR.x/V03.01//Auslieferung/2015-06-03/en

copyright by
LIEBHERR

```
*** SETUP - MENUE***
[1] Einstellungen
```

Fig. 2225: Menu

The following parameters appear:
– Top display: Menu
– Bottom display: [1] Settings

The following menus can be selected:
– [1] Settings
– [2] Service
– [3] Safety
– [4] Daily operating hours
– [5] Total operating hours
– [6] Exit

▶ Press the button *F1* on control unit *External air conditioning system* until the desired menu is displayed.

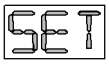

▶ Press button *SET* on control unit *External air conditioning system*.
▷ Desired menu is selected.

Resetting daily operating hours

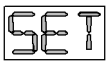

▶ Press and hold the button *SET* on control unit *External air conditioning system* and turn ignition key on control unit *External air conditioning system* to position “1”.
▷ Menu is shown on the display of control unit *External air conditioning system*:

```
*** SETUP - MENUE***
[1] Einstellungen
```

Fig. 2229: Menu

The following parameters appear:
– Top display: Menu
– Bottom display: [1] Settings

▶ Press the button *F1* on control unit *External air conditioning system* until the menu “[4] Daily operating hours” is displayed.

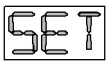

▶ Press button *SET* on control unit *External air conditioning system*.

▷ The menu “[4] Daily operating hours” is shown on the display of control unit *External air conditioning system*:

```
*** Tageszaehler***
Pin-Nr.:      _ _ _ _
```

Fig. 2232: Menu [4] Daily operating hours

The following parameters appear:
– Top display: Daily operating hours
– Bottom display: Pin number query

The PIN number is 4000.

LWN/LR.x/V03.01//Auslieferung/2015-06-03/en

copyright by
LIEBHERR

▶ Press the button *F1* on control unit *External air conditioning system* until “4” is displayed in the first PIN number field.

▶ Press button *SET* on control unit *External air conditioning system*.
▷ First PIN number field is selected.
▷ Second PIN number field blinks and shows “0”.

▶ Press button *SET* on control unit *External air conditioning system*.
▷ Second PIN number field is selected.
▷ Third PIN number field blinks and shows “0”.

▶ Press button *SET* on control unit *External air conditioning system*.
▷ Third PIN number field is selected.
▷ Fourth PIN number field blinks and shows “0”.

▶ Press button *SET* on control unit *External air conditioning system*.

▷ Fourth PIN number field is selected.
▷ The menu “Delete day counter” is shown on the display of control unit *External air conditioning system*:

```
**Tageszaehler**
  Löschen
```

Fig. 2238: Menu Delete day counter

The following parameters appear:
– Top display: Daily operating hours
– Bottom display: Delete

▶ Press button *F1* on control unit *External air conditioning system*.

▶ Press button *SET* on control unit *External air conditioning system*.
▷ Daily operating hours are reset.

Displaying error messages

▶ Press and hold the button *SET* on control unit *External air conditioning system* and turn ignition key on control unit *External air conditioning system* to position “1”.
▷ Menu is shown on the display of control unit *External air conditioning system*:

```
*** SETUP - MENUE***
[1] Einstellungen
```

Fig. 2242: Menu

The following parameters appear:
– Top display: Menu
– Bottom display: [1] Settings

▶ Press the button *F1* on control unit *External air conditioning system* until the menu “[2] Service” is displayed.

▶ Press button *SET* on control unit *External air conditioning system*.

LWN/LR.x/V03.01//Auslieferung/2015-06-03/en

copyright by
LIEBHERR

▷ The menu “[2] Service” is shown on the display of control unit *External air conditioning system*:

```
[2] Service
Pin-Nr.:      _ _ _ _
```

Fig. 2245: Menu [2] Service

The following parameters appear:
– Top display: Service
– Bottom display: Pin number query

The PIN number is 2000.

▶ Press the button *F1* on control unit *External air conditioning system* until “2” is displayed in the first PIN number field.

▶ Press button *SET* on control unit *External air conditioning system*.
▷ First PIN number field is selected.
▷ Second PIN number field blinks and shows “0”.

▶ Press button *SET* on control unit *External air conditioning system*.
▷ Second PIN number field is selected.
▷ Third PIN number field blinks and shows “0”.

▶ Press button *SET* on control unit *External air conditioning system*.
▷ Third PIN number field is selected.
▷ Fourth PIN number field blinks and shows “0”.

▶ Press button *SET* on control unit *External air conditioning system*.

▷ Fourth PIN number field is selected.
▷ The menu “[2] Service/[1] Service settings” is shown on the display of control unit *External air conditioning system*:

```
[2] Service
[1] Service Einstellungen
```

Fig. 2251: Menu [2] Service/[1] Service settings

The following parameters appear:
– Top display: [2] Service
– Bottom display: [1] Service settings

The following menus can be selected:
– [1] Service settings
– Error memory
– Exit

▶ Press the button *F1* on control unit *External air conditioning system* until the menu “Error memory” is displayed.

▶ Press button *SET* on control unit *External air conditioning system*.

▷ The menu “[2] Service/Error memory” is shown on the display of control unit *External air conditioning system*:

```
[2] Service
Fehlerspeicher
```

Fig. 2254: Menu [2] Service/Error memory

LWN/LR.x/V03.01//Auslieferung/2015-06-03/en

copyright by
LIEBHERR

The following parameters appear:
– Display top line: [2] Service
– Display bottom line: Error memory

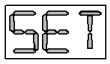

▶ Press button *SET* on control unit *External air conditioning system*.

▷ The first error message is shown on the display of control unit *External air conditioning system*:

Nr. 1	0,0 h
Oeldruck	

Fig. 2256: First error message

The following parameters appear:
– Display top left: Error number
– Display top right: Operating hour at which the error occurred
– Bottom display: Type of error

▶ Press button *F1* on control unit *External air conditioning system*.
▷ Error messages are displayed in sequence.

4.7.8 Auxiliary heating*

A heating start time can be preset within a seven day period with control unit *Auxiliary heating*. Three start times can be programmed, however only one can be activated.

The control unit *Auxiliary heating* has an alarm function.

When the ignition is switched on, the clock displays the current time and the day. The display and buttons are illuminated when the heating system is in operation.

All symbols on the display flash after the power supply has been connected. The time and weekday must be set.

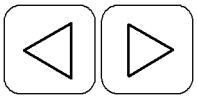

The clock has been designed so that all flashing symbols can be set with the button *Back* or with the button *Next*. The displayed time is saved if no button is pressed for a period of five seconds. Time-scrolling is accelerated if either the *Back* or *Next* buttons are pressed for longer than two seconds.

If the ignition is switched off while the heating system is in continuous heating mode, a remaining operating time of 15 minutes is displayed and the heating system remains active.

Switching on auxiliary heating

Switching on auxiliary heating manually

▶ Press the button *Instant heating* on control unit *Auxiliary heating*.

When ignition is switched off:
▷ Auxiliary heating is switched on for programmed duration.

When ignition is switched on:
▷ Permanent auxiliary heating operation is turned on.

Switching on auxiliary heating automatically

▶ Set start of heating (For more information see: Setting start of heating, page 857) .

LWN/LR.x/V03.01//Auslieferung/2015-06-03/en

copyright by LIEBHERR

Switching off auxiliary heating

Switching off auxiliary heating manually

- ▶ Press the button *Instant heating* on control unit *Auxiliary heating*.
  - ▷ Auxiliary heating is turned off.

Switching off auxiliary heating automatically

- ▶ Set activation time (For more information see: Setting the activation time, page 858) .

Switching off auxiliary heating using remaining operating time

- ▶ Set remaining operating time (For more information see: Setting remaining operating time, page 858) .

Setting the time and day

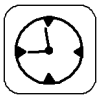

- ▶ Press the button *Time* on control unit *Auxiliary heating* for more than two seconds.
  - ▷ Time blinks on the display of control unit *Auxiliary heating*.

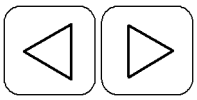

- ▶ Set time using *Back* or *Next* buttons.
- ▶ Wait five seconds.
  - ▷ Time is set.
  - ▷ Day blinks on the display of control unit *Auxiliary heating*.

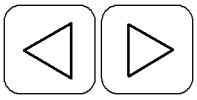

- ▶ Set day using *Back* or *Next* buttons.
- ▶ Wait five seconds.
  - ▷ Day is set.

Calling up time and day

Time and day are always on the display when ignition is switched on.

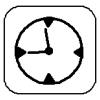

When ignition is switched off:

- ▶ Press the button *Time* on control unit *Auxiliary heating*.
  - ▷ Time and day are shown on the display of control unit *Auxiliary heating* for five seconds.

Setting start of heating

- ▶ Press the button *Program* on control unit *Auxiliary heating*.
  - ▷ Indicator memory slot1 blinks on the display of control unit *Auxiliary heating*.

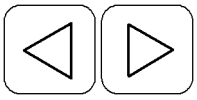

- ▶ Set start of heating using *Back* or *Next* buttons.
- ▶ Wait five seconds.
  - ▷ Time is set.
  - ▷ Day blinks on the display of control unit *Auxiliary heating*.

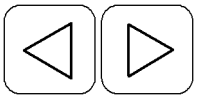

- ▶ Set day using *Back* or *Next* buttons.
- ▶ Wait five seconds.
  - ▷ Day is set.
  - ▷ Indicator memory slot1 is shown on the display of control unit *Auxiliary heating*.

LWN/LR.x/V03.01//Auslieferung/2015-06-03/en

copyright by LIEBHERR

▷ Start of heating is set.

▶ If required, repeat procedure at indicator memory slot2 and memory slot3.
▷ Start of heating is set.

Displaying or deleting start of heating

Displaying start of heating

▶ Press the button *Program* on control unit *Auxiliary heating* until desired memory slot is shown on the display of control unit *Auxiliary heating*.
▷ Start of heating is shown on the display of control unit *Auxiliary heating*.

Deleting start of heating

▶ Press the button *Program* on control unit *Auxiliary heating* until no memory slot is shown on the display of control unit *Auxiliary heating*.
▷ Time is shown on the display of control unit *Auxiliary heating*.
▷ Start of heating is deleted.

Setting the activation time

Make sure the following prerequisites are met:
❑ Heater is switched off.

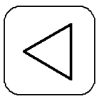

▶ Press the button *Back* on control unit *Auxiliary heating* for three seconds.
▷ Activation time blinks on the display of control unit *Auxiliary heating*.

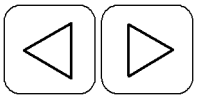

▶ Program activation time to between one and 120 minutes using *Back* or *Next* buttons.

▶ Wait five seconds.
▷ Activation time is set.

Setting remaining operating time

Make sure the following prerequisites are met:
❑ Ignition is turned off.
❑ Heater is switched on.

▶ Press the button *Back* on control unit *Auxiliary heating*.
▷ Remaining time blinks on the display of control unit *Auxiliary heating*.

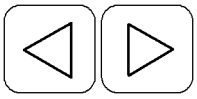

▶ Program remaining time to between one and 120 minutes using *Back* or *Next* buttons.

▶ Wait five seconds.
▷ Remaining time is set.

Setting the alarm

The alarm is not linked to any specific day.

The alarm switches itself off after five minutes, or if a button is pressed.

▶ Press the button *Program* on control unit *Auxiliary heating* until the bell symbol is shown on the display of control unit *Auxiliary heating*.

LWN/LR.x/V03.01//Auslieferung/2015-06-03/en

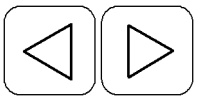

▶ Set alarm time using *Back* or *Next* buttons.
▷ Alarm time is set.

Displaying or deleting alarm times

Displaying the alarm time

▶ Press the button *Program* on control unit *Auxiliary heating* until the bell symbol is shown on the display of control unit *Auxiliary heating*.
▷ Alarm time is shown on the display of control unit *Auxiliary heating*.

Deleting alarm time

▶ Press the button *Program* on control unit *Auxiliary heating* until the bell symbol is no longer shown on the display of control unit *Auxiliary heating*.
▷ Alarm time is deleted.

LWN/LR.x/V03.01//Auslieferung/2015-06-03/en

copyright by
LIEBHERR

4.8 Additional cab equipment

4.8.1 Using the horn

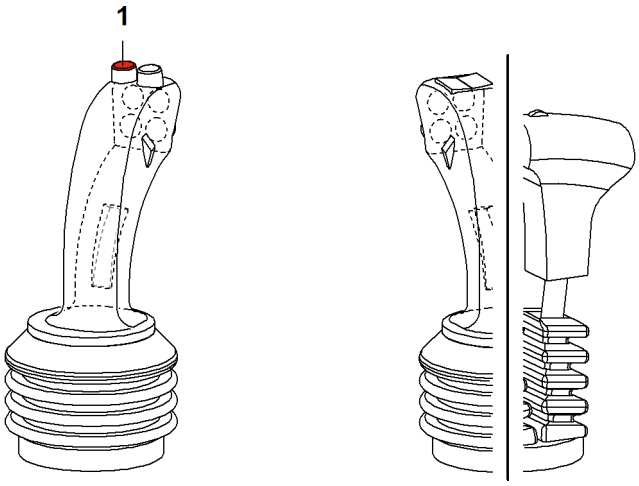

Fig. 2278: Operating the horn

1 Button *Horn*

▶ Press the button *Horn* **1** on left multi-directional control lever.
▷ The horn sounds.

4.8.2 Operating the safety lever

WARNING
Drives may still be moving after having been switched off!
Serious injury.

▶ Fold safety lever up only when drives have stopped.

LWN/LR.x/V03.01//Auslieferung/2015-06-03/en

copyright by
LIEBHERR

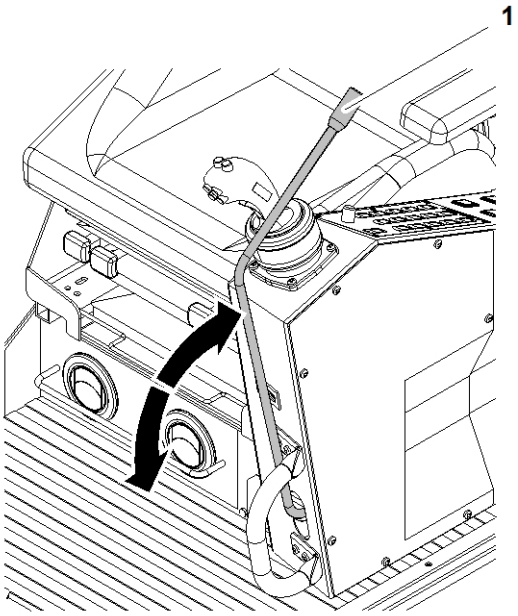

Fig. 2279: Operating the safety lever

1 Safety lever

▶ Lift safety lever **1**.
  ▷ This blocks the foot pedals, control lever and buttons.

The safety lever **1** must be lifted in the following situations:
– When leaving the cabin.
– During breaks (even if the machine operator is still in the cabin).
– When reading the operating manual.

▶ Lower safety lever **1** for operation.

4.8.3 Operating the radio

Ensure that the following conditions are fulfilled:
❑ Ignition key is in position “1” or position “P”.

LWN/LR.x/V03.01//Auslieferung/2015-06-03/en

copyright by
LIEBHERR

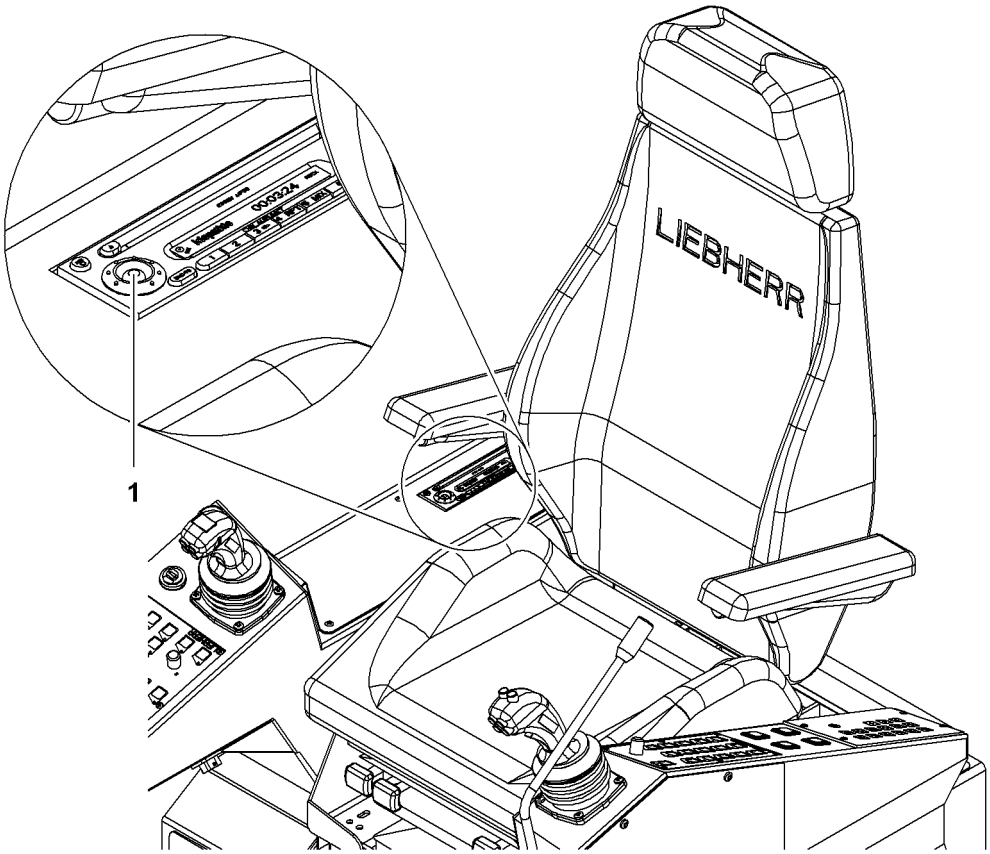

Fig. 2280: Operating the radio

1 Installed radio

▶ Please refer to the radio **1** operating manual.

4.8.4 Using the ashtray

WARNING
Flammable waste is in the ashtray!
Risk of fire, explosion.

▶ Do not place any flammable waste in the ashtray.

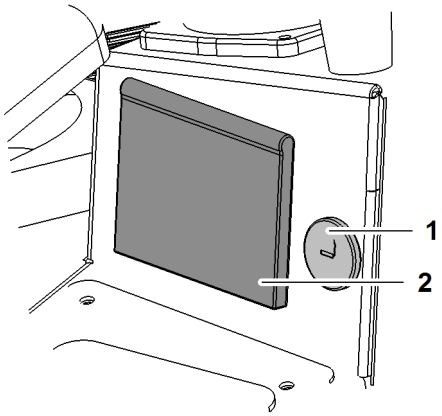

Fig. 2281: Using the ashtray

1 Cigarette lighter

2 Ashtray

LWN/LR.x/V03.01//Auslieferung/2015-06-03/en

▶ To use the ashtray **2**, fold it out.

▶ To empty the ashtray: lightly press the clip in the middle downwards.

4.8.5 Using the cigarette lighter

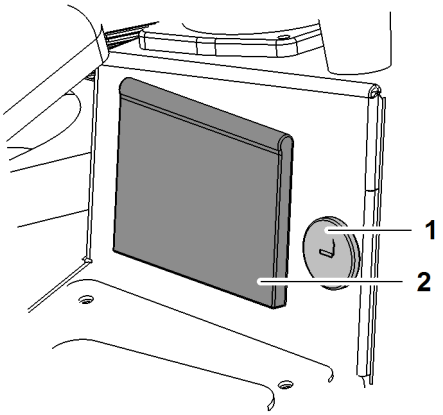

Fig. 2282: Using the cigarette lighter

1 Cigarette lighter **2** Ashtray

▶ Press the handle of the cigarette lighter **1** until it engages.
▷ After about 1 minute the handle disengages automatically and the surface of the cigarette lighter glows.

LWN/LR.x/V03.01//Auslieferung/2015-06-03/en

copyright by
LIEBHERR

4.9 Cab tilting device*

WARNING
Danger if attempting to enter or leave the cab when tilted!
Risk of falling off the uppercarriage.

▶ Only enter and leave the cab when it is in a horizontal or lowered position.

4.9.1 Tilting the cabin

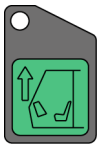

▶ Press the *Tilt cabin up* button on control panel *X11*.
▷ The cab can tilt up to a maximum of 20° (20°).

▶ Press the *Tilt cabin down* button on control panel *X11*.
▷ The cab can tilt down to a maximum of 0° (0°).

LWN/LR.x/V03.01//Auslieferung/2015-06-03/en

copyright by
LIEBHERR

4.10 Hydraulic cabin elevation*

4.10.1 Adjusting the cabin

WARNING
Incorrect operation of hydraulic cabin elevation system!
Severe injuries, damage to machine.

- ▶ Ensure that only the machine operator is in the cabin.
- ▶ Check the function of all safety devices before adjusting the cabin.
- ▶ Do not move the machine when the cabin is elevated.

WARNING
Personnel or objects underneath the cabin when it is lowered!
Severe injuries, damage to machine.

- ▶ Make sure that no-one is standing in the danger zone.
- ▶ Ensure that there are no objects underneath the cabin.
- ▶ Check the area under the cabin before lowering it.

Ensure that the following conditions are fulfilled:
- ❑ Mast is erected and pinned.
- ❑ Emergency lowering valves are closed.
- ❑ Cabin is in working position.
- ❑ Chain guide is removed.
- ❑ Chain is pinned to cabin.
- ❑ Crane operation is selected.
- ❑ Diesel engine is switched on.
- ❑ Cylinder adjustment functions are on.
- ❑ Safety chain is attached.

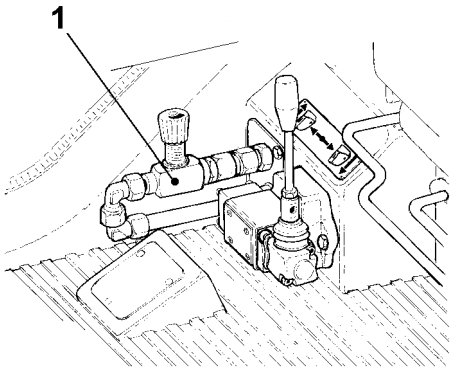

Fig. 2285: Adjusting the cabin

1 Emergency lowering valve for cabin

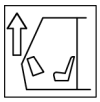

- ▶ Press and hold the button *Raise cabin* on the right control panel.
  - ▷ Cabin moves upwards.

LWN/LR.x/V03.01//Auslieferung/2015-06-03/en

copyright by
LIEBHERR

▶ Press and hold the button *Lower cabin* on the right control panel.
▷ Cabin moves down.

Note

If cabin can no longer be lowered with the button *Lower cabin*:
▶ Lower cabin with emergency lowering valve **1** in cabin or emergency lowering valve on mast.

Abseiling rescue device

If the overrun brake engages, the cabin can no longer be adjusted. The machine operator in this instance must abseil down using the abseiling rescue device.

If the cabin can no longer be adjusted:
▶ Use abseiling rescue device (For more information see: 4.39.1 Using abseil rescue equipment, page 1007) .

LWN/LR.x/V03.01//Auslieferung/2015-06-03/en

copyright by
LIEBHERR

4.11 Central lubrication*

The central swing ring bearing lubrication system lubricates automatically at the programed lubrication times and break times. The lubrication process is stated when starting the diesel engine and works during the operation of the machine and with lowered safety lever.

The central swing ring tooth flank lubrication system lubricates automatically at the programed lubrication times and break times. The lubrication process is stated when operating the swing and works during the operation of the machine and with lowered safety lever.

NOTICE
Insufficient lubrication!
the swing ring bearings and/or swing ring tooth flanks may be damaged.

▶ Do not exceed the lubrication times and break times set by the factory.

NOTICE
Incorrect adjustment of the positive pressure relief valve!
Central lubrication system may be damaged.

▶ Retain manufacturer's settings on the positive pressure relief valve.

4.11.1 Set lubrication time

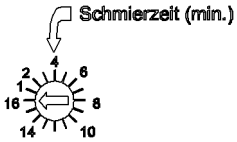

The range of adjustment for lubrication time is from 1 to 16 minutes. The factory setting for lubrication time is 2 minutes.

▶ Turn the *Set lubrication time* rotary control knob to the desired lubrication time.

4.11.2 Set pause time

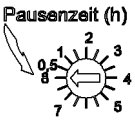

The range of adjustment for pause time is from 0.5 to 8 hours. The factory setting for pause time is 1 hour.

▶ Turn the *Set pause time* rotary control knob to the desired pause time.

4.11.3 Interim lubrication

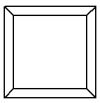

▶ Press the *Interim lubrication* button.

LWN/LR.x/V03.01//Auslieferung/2015-06-03/en

copyright by
LIEBHERR

4.12 Mode

4.12.1 Activating/deactivating assembly functions on or off

▶ Press the *Assembly functions* switch on control panel *X12*.

▷ Assembly functions are activated.
▷ Symbol *Assembly functions* appears on screen:

Fig. 2292: Symbol Assembly functions

▶ Press the *Assembly functions* switch on control panel *X12* again.
▷ Assembly functions are deactivated.
▷ The symbol *Assembly functions* disappears on screen.

4.12.2 Selecting the mode

Crane operation is the standard operation mode of the machine. The machine is automatically in crane operation if no assembly mode functions or special mode of operation is selected. The electronic load moment limiter (LML) and all safety devices are activated.

Ensure that the following conditions are fulfilled:
❑ The machine has been fully set up.
❑ Tilting-back support cylinders are extended.

▶ Press the *Mode* button on the monitor.
▷ The *Mode* screen is displayed on the monitor.

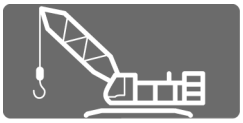

▶ Press button for desired mode (e.g. crane mode) on the monitor.

▶ Press and hold *Mode* button on control panel *X12*.

▶ Press *Confirm* button on the monitor.

▶ Let go of the *Mode* button on control panel *X12*.
▷ The symbol *Restart machine* is displayed on the monitor:

LWN/LR.x/V03.01/Auslieferung/2015-06-03/en

copyright by
LIEBHERR

Fig. 2298: Symbol Restart machine

- Turn off the ignition.
- Start diesel engine after approx. 10 seconds.
  - ▷ Desired mode is selected.

LWN/LR.x/V03.01//Auslieferung/2015-06-03/en

copyright by
LIEBHERR

4.13 Programming the setup

DANGER
Unacceptable setup!
Toppling of machine, structural breakdown.

- ▶ Only program a set-up on the machine that is in accordance with the load chart.
- ▶ Re-calculate the setup if there is any change to the setup. This includes changes during operation, (e.g. rope of winch1/winch2, reeving, or change of load position).

Note
The only load chart that is permitted and applicable for operational purposes is the electronic load chart on the machine. The printed load chart and the load chart on the CD are copies of the electronic load chart on the machine.

If the identification numbers and revision numbers of the two load charts do not match:
- ▶ Order new printed/CD versions of the load charts from Liebherr after sales service.

The set-up is retained when the ignition is switched off.

Ensure that you understand what the symbols on the *setup* screen mean (For more information see: 3.18 Setup screen, page 715) .

4.13.1 Call up the *Setup* screen

- ▶ Press the *Setup* button on the monitor.
  - ▷ The *setup* screen with the current configuration appears.

LWN/LR.x/V03.01//Auslieferung/2015-06-03/en

copyright by
LIEBHERR

4.13.2 Selecting and changing settings

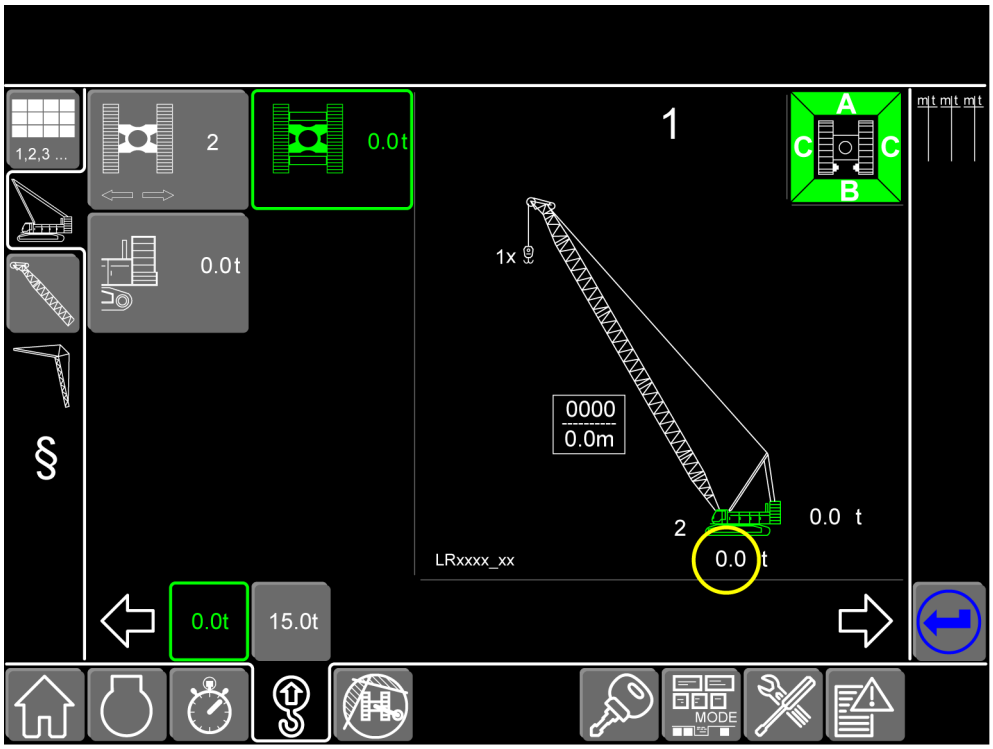

Fig. 2300: Example of a Setup screen

▶ Press the *Basic machine* button on the monitor.

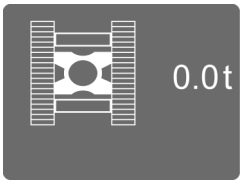

▶ Press the button for the desired setting on the monitor.

▶ Press the *Value* button on the monitor.
▷ Selected value is applied.

When wanting to switch to the next larger values:
▶ Press the *Higher values* button on the monitor.

When wanting to switch to the next smaller values:
▶ Press the *Lower values* button on the monitor.

4.13.3 Calculating the revised set-up

Do not press any keys during the calculation. This will cancel the calculation.

LWN/LR.x/V03.01//Auslieferung/2015-06-03/en

copyright by
LIEBHERR

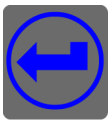

▶ Press the button *Calculate load chart* (lit blue) on the monitor.

▷ Calculation starts.
▷ During calculation, the *hourglass* symbol appears instead of the *Calculate load chart* button.

Fig. 2307: Hourglass symbol

▷ Once the calculation is completed, the symbol *Calculate load chart* appears:

Fig. 2308: Symbol Calculate load chart

Troubleshooting
Symbol *Calculate load chart* blinks red?
The entry was incorrect.

Fig. 2309: Symbol Calculate load chart (blinks red)

▶ Locate and change wrong input on *setup* screen.

▶ Restart the calculation.

4.13.4 Checking the programed setup

▶ Switch to the *Operation* screen: Press the *Mode* button on the monitor.

If the setup was changed:
▶ drive one load circle without load.

LWN/LR.x/V03.01//Auslieferung/2015-06-03/en

copyright by
LIEBHERR

4.14 Load moment limiter (LML)

4.14.1 General

DANGER
Incorrect procedure!
Machine toppling over, structural breakdown.

- ▶ Ensure that the machine operator knows the weight of the load, the radius of the boom and the values of the applicable load chart.
- ▶ Work only with permitted values of the load chart.
- ▶ Never use the load moment limiter as a routine way of switching the machine off.

The load moment limiter:
- is an electronic limiter of the load moment.
- is adapted to the application in question through input of the setup.
- when the maximum load moment is reached, stops and prevents all machine movements that could further increase the load moment; it also prevents the “raise main boom” and “raise jib” functions.

The load moment limiter has various information displays:
- Load moment limiter on screen *Operation* on monitor
- Load moment limiter lamps on roof of the cab and on A-frame 1
- Warning buzzer inside the cab
- Load moment limiter signal to warn people in the danger zone around the machine

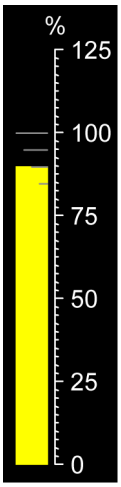

The **90% mark** of the load moment utilization on the *Operation* screen is reached:
- The *Load moment limiter warning* symbol appears on the monitor.
- Load moment limiter lamps light up orange.
- The warning buzzer inside the cabin sounds (interval: short sound, long pause). The warning buzzer can be suppressed after 5 seconds using the *Warning buzzer* button.

Fig. 2312: Symbol Load moment limiter warning (lit yellow)

LWN/LR.x/V03.01//Auslieferung/2015-06-03/en

copyright by
LIEBHERR

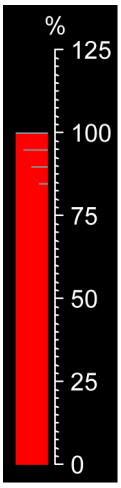

The **100% mark** of the load moment utilization on the *Operation* screen is reached:
- The *Load moment limiter stop* symbol appears on the monitor.
- The following machine movements are disabled:
  - Raise winch 1.
  - Raise winch 2.
  - Lower the main boom.
  - Lower jib.
  - Lower suspended counterweight.
  - Reduce the wheeled counterweight carriage radius.
  - Raise wheeled counterweight carriage support.
- “Raise main boom” is permitted up to 105% of the maximum permitted load moment.
- “Raise jib” is permitted up to 105% of the maximum permitted load moment.
- Load Moment Limiter lamps light up red.
- The load moment limiter signal sounds.
- The warning buzzer inside the cabin sounds (interval: short sound, short interval). The warning buzzer can be suppressed after 5 seconds using the *Warning buzzer* button.

Fig. 2314: Load moment limiter stop symbol

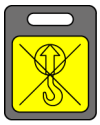

To circumvent a deadlock, the maximum permitted load moment can be increased by 5% using the *load moment limiter assembly/self-lock* button.

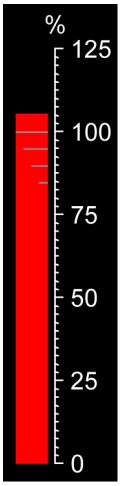

The **105% mark** of the load moment utilization on the *Operation* screen is reached:
- The *Load moment limiter stop* symbol appears on the monitor.
- The following machine movements are disabled:
  - Raise winch 1.
  - Raise winch 2.
  - Lower the main boom.
  - Lower jib.
  - Lower suspended counterweight.
  - Reduce the wheeled counterweight carriage radius.
  - Raise wheeled counterweight carriage support.
- “Raise main boom” is permitted up to 110% of the maximum permitted load moment.
- “Raise jib” is permitted up to 110% of the maximum permitted load moment.
- Load Moment Limiter lamps light up red.
- The load moment limiter signal sounds.
- The warning buzzer inside the cabin sounds (interval: short sound, short interval). The warning buzzer can be suppressed after 5 seconds using the *Warning buzzer* button.

Fig. 2317: Load moment limiter stop symbol

LWN/LR.x/V03.01/Auslieferung/2015-06-03/en

copyright by
LIEBHERR

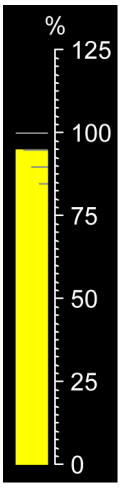

The **95% mark** of the load moment utilization on the *Operation* screen is undercut:
- The *Load moment limiter warning* symbol appears on the monitor.
- Load moment limiter lamps light up orange.
- The warning buzzer inside the cabin sounds (interval: short sound, long pause). The warning buzzer can be suppressed after 5 seconds using the *Warning buzzer* button.

Fig. 2319: Symbol Load moment limiter warning (lit yellow)

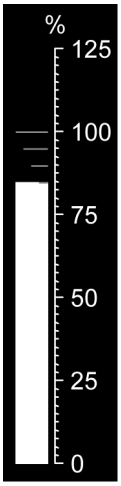

The **85% mark** of the load moment utilization on the *Operation* screen is undercut:
- The *Load moment limiter warning* symbol disappears on the monitor.
- Load Moment Limiter lamps light up green.
- Warning buzzer inside the cab falls silent.

Symbol **Danger of toppling backwards** appears on monitor:
- Machine may topple backwards due to insufficient load.
- The “raise main boom” and/or “raise jib” functions are disabled. In an emergency, the function blocks can be disabled using the *load moment limiter shut down* key switch (machines with CE load chart) or the *load moment limiter shut down* button (machines with ANSI load chart).

If the “Load moment limitation self-lock” or “Load moment limitation shut down” function is active, machine data are recorded as specified in the guidelines. A storage medium for this purpose is located in switch cabinet X1. The machine operator is responsible for ensuring that the storage medium is not removed.

LWN/LR.x/V03.01//Auslieferung/2015-06-03/en

copyright by
LIEBHERR

4.14.2 Load moment limiter self-lock

DANGER
Inaproppropriate use of the “Load moment limiter self-lock” function!
Machine toppling over, structural breakdown.

▶ Only use the “load moment limiter self-lock” function to enable the machine from a self-lock (Deadlock) situation.

When pressing the button *Load moment limiter assembly/self-blockade* on control panel *X23*, the load moment limiter decides which function will be activated according to the current machine geometry. If no load chart exists for the current geometry, the “load moment limiter assembly” function is activated ((For more information see: 7 Assembly and dismantling, page 1107)). If a load chart exists for the current geometry, the “load moment limiter self-blockade” function is activated.

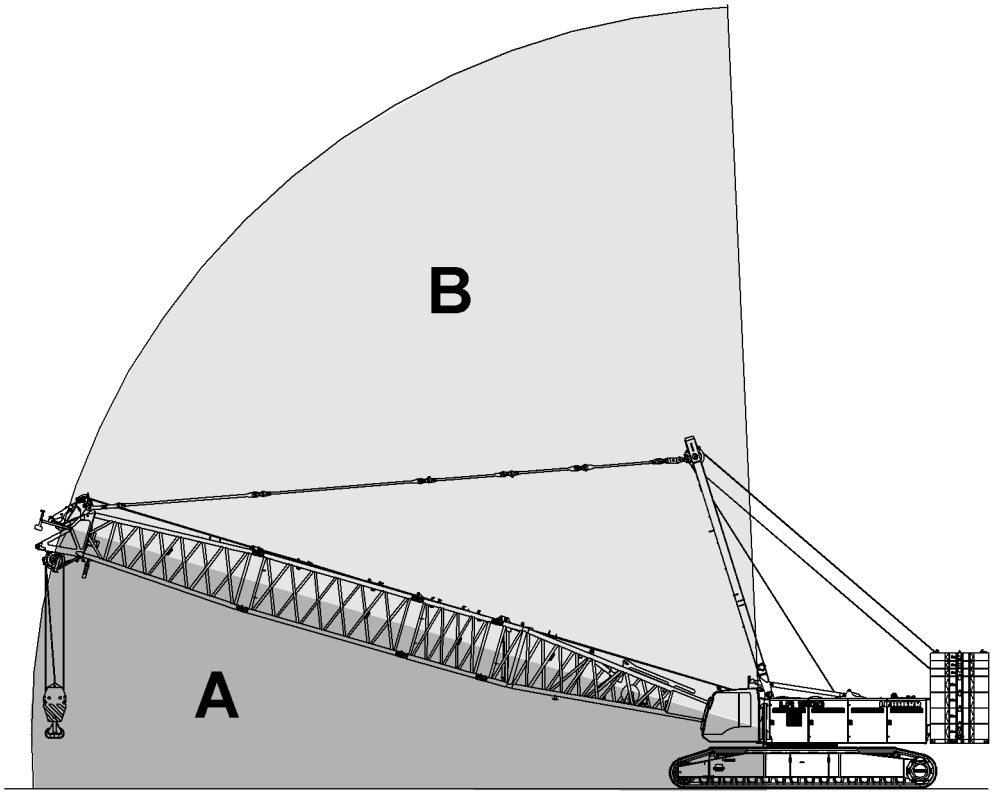

Fig. 2323: Diagram: Geometry of the machine inside and outside the load chart

A Geometry of the machine outside the load chart

B Geometry of the machine inside the load chart

Example of a self-lock (Deadlock): A load close to the maximum permitted load moment is lowered from a great height. The increasing weight of the rope between the pulley block and the boom head increases the load moment and results in a load moment limiter stop followed by a self-lock, as the following movements are disabled:
– Raise winch 1.
– Raise winch 2.
– Lower the main boom.
– Raise main boom (above 105% utilization).
– Lower jib.

LWN/LR.x/V03.01//Auslieferung/2015-06-03/en

copyright by LIEBHERR

– Raise jib (above 105% utilization).
– Lower suspended counterweight.
– Reduce the wheeled counterweight carriage radius.
– Raise wheeled counterweight carriage support.

The “load moment limiter self-blocking” function reenables all movements up to 105% utilization of the maximum permitted load moment (raise main boom/jib up to 110% utilization). The speed of the movements is reduced on machines with a CE load chart.

Ensure that the following conditions are fulfilled:
❑ Load Moment Limiter is functioning properly.
❑ Control levers are in zero position.

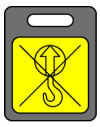

▶ Press the *Load moment limiter assembly/self-lock* button on control panel *X23*.

There is a load chart for machines geometry:
▷ Function “Load moment limiter self-lock” is active.
▷ The LED on the button*Load moment limiter assembly/self-lock* lights up.
▷ Machine movements up to 105% utilization of the maximum permitted load moment are permitted.
▷ “Raise main boom” is permitted up to 110% of the maximum permitted load moment.
▷ The speed of the machine movements (raise/lower winch 1, raise/lower winch 2, raise/lower main boom, raise/lower jib, raise/lower auxiliary winch, swing right/left) is reduced to 15%.
▷ The speed of the crawler is reduced to 25%.
▷ Load Moment Limiter lamps light up orange.
▷ The *Load moment limiter warning* symbol appears on the monitor:

Fig. 2325: Symbol Load moment limiter warning (lit yellow)

▷ If the machine is using a CE load chart, the *Data recording active* symbol appears on the monitor:

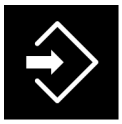

Fig. 2326: Data recording active symbol

The “load moment limiter self-lock” function is deactivated in the following situations:
– There is no load chart for machines geometry.
– Load Moment Limiter is not functioning properly.
– The machine operator does not carry out any machine movements for more than 10 seconds.
– The diesel engine is switched off and 10 seconds have passed.
– The machine operator operates the *load moment limiter shut down* key switch.
– Machine operator presses the button *Load moment limiter assembly/self-blockade* on control panel *X23*.

LWN/LR.x/V03.01//Auslieferung/2015-06-03/en

copyright by
LIEBHERR

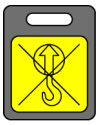

▶ Press the *Load moment limiter assembly/self-lock* button on control panel *X23*.

▷ Function “Load moment limiter self-lock” is deactivated.
▷ The LED on the button *Load moment limiter assembly/self-lock* goes out.
▷ Load moment limiter is active.
▷ Load moment limiter lamps light up according to the current status of the Load Moment Limiter system.
▷ If the machine is using a CE load chart, the *Data recording active* symbol disappears on the monitor.

4.14.3 Load moment limiter shut down (CE load chart)

The following description of the “load moment limiter shut down” function applies exclusively to machines with a CE load chart.

DANGER
Inaproppropriate use of the “Load moment limiter shut-down” function!
Machine toppling over, structural breakdown.

▶ The “load moment limiter shut down” function is to be used exclusively for checking the machine using a test load or when the load moment limiter fails. These checks may only be carried out by specialists from the national, certified testing institute.

▶ If the load moment limiter fails, use the “load moment limiter shut down” function to move the machine out of the danger area.

Ensure that the following conditions are fulfilled:
❑ Diesel engine is switched on.
❑ Control levers are in zero position.

▶ Leave the cab and open the uppercarriage door.

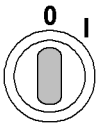

▶ Activate the *Load moment limitation shut down* key switch.

▷ Load moment limiter is turned off.
▷ Any preselection of the button *Load moment limiter assembly/self-blockade* on control panel *X23* is deselected.
▷ The speed of the machine movements (raise winch 1, raise winch 2, lower main boom, lower jib, raise auxiliary winch) is reduced to 15%.
▷ Load Moment Limiter lamps flash red.
▷ The load moment limiter signal sounds continuously.
▷ The *Load moment limiter off* symbol appears on the monitor:

Fig. 2329: Load moment limiter off symbol

▷ The *Data recording active* symbol appears on the monitor:

LWN/LR.x/V03.01//Auslieferung/2015-06-03/en

copyright by
LIEBHERR

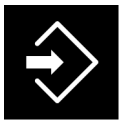

Fig. 2330: Data recording active symbol

The “load moment limiter shut down” function is deactivated in the following situations:
– Diesel engine is switched off.
– 30 minutes have passed since the function was activated and the control levers are in zero position.
– The machine operator operates the *load moment limiter shut down* key switch.

▶ Activate the *Load moment limitation shut down* key switch.
▷ Load moment limiter is active.
▷ Load moment limiter lamps light up according to the current status of the Load Moment Limiter system.
▷ Load moment limiter signal sounds according to the current status of the Load Moment Limiter system.
▷ The *Load moment limiter off* symbol disappears on the monitor.
▷ The *Data recording active* symbol disappears on the monitor:

4.14.4 Load moment limiter shut down (ANSI load chart)

The following description of the “load moment limiter shut down” function applies exclusively to machines with an ANSI load chart.

DANGER
Inapropppropriate use of the “Load moment limiter shut-down” function!
Machine toppling over, structural breakdown.

▶ The “load moment limiter shut down” function is to be used exclusively for checking the machine using a test load or when the load moment limiter fails. These checks may only be carried out by specialists from the national, certified testing institute.

▶ If the load moment limiter fails, use the “load moment limiter shut down” function to move the machine out of the danger area.

Ensure that the following conditions are fulfilled:
❑ Diesel engine is switched on.
❑ Control levers are in zero position.

▶ Unlock control panel *X12*.

▶ Press the *Load moment limiter shut down enable* button on control panel *X12*.

▷ The lamp in the *load moment limiter shut down enable* switch lights up.
▷ The LED on the button*Load moment limiter assembly/self-lock* flashes.

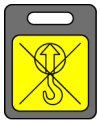

▶ Press the *Load moment limiter assembly/self-lock* button on control panel *X23*.

▷ Load moment limiter is turned off.
▷ The LED on the button*Load moment limiter assembly/self-lock* lights up.
▷ Load Moment Limiter lamps flash red.
▷ The load moment limiter signal sounds continuously.

LWN/LR.x/V03.01//Auslieferung/2015-06-03/en

copyright by
LIEBHERR

▷ The *Load moment limiter off* symbol appears on the monitor:

Fig. 2333: Load moment limiter off symbol

The “load moment limiter shut down” function is deactivated in the following situations:
– The machine operator actuates the safety lever.
– Machine operator presses the button *Load moment limiter assembly/self-blockade* on control panel *X23*.

▶ Press the *Load moment limiter assembly/self-lock* button on control panel *X23*.
▷ The LED on the button*Load moment limiter assembly/self-lock* flashes.
▷ Load moment limiter is active.
▷ Load moment limiter lamps light up according to the current status of the Load Moment Limiter system.
▷ Load moment limiter signal sounds according to the current status of the Load Moment Limiter system.
▷ The *Load moment limiter off* symbol disappears on the monitor.

▶ Press the *Load moment limiter shut down enable* button on control panel *X12*.
▷ Load Moment Limiter lamps go out.
▷ The lamp in the *load moment limiter shut down enable* switch goes out.

▶ Lock control panel *X12* and remove the key.

▶ Ensure that the key is kept by an authorized person outside of the cab.

LWN/LR.x/V03.01//Auslieferung/2015-06-03/en

copyright by
LIEBHERR

4.15 Calculating load charts online

The Litronic control system simulates load charts for any setup online. The currently selected setup is used for the calculation.

Depending on the specified setup and load position, additional values will be required.

No additional values need to be entered for boom configurations 1, 2 and 3.

With boom configuration 4, 5 and 9, a load chart can only be calculated for one main boom angle (alpha). The main boom angle must be entered manually prior to calculation.

4.15.1 Calculating load charts

▶ Press the *Setup* button on the monitor.
▷ The *Setup* screen appears on the monitor.

▶ Press the *Load chart* button on the monitor.
▷ The *Setup - load chart* screen appears on the monitor.

▶ Press input field on the monitor.
▷ Input field selected.

▶ Increasing the value in selected input field by +1: press the *Increase value +1* button on the monitor.

▶ Increasing the value in selected input field by +0.1: press the *Increase value +0.1* button on the monitor.

▶ Decreasing the value in selected input field by -0.1: press the *Decrease value -0.1* button on the monitor.

▶ Decreasing the value in selected input field by -1: press the *Decrease value -1* button on the monitor.

▶ Press input field on the monitor again.
▷ Input confirmed.

▶ Repeat the process until all the values have been entered.

▶ Press the *Load chart* button on the monitor.
▷ Calculation starts.
▷ The load chart with the calculated values is displayed.

LWN/LR.x/V03.01//Auslieferung/2015-06-03/en

copyright by
LIEBHERR

4.15.2 Boom configuration 4 - load position 1

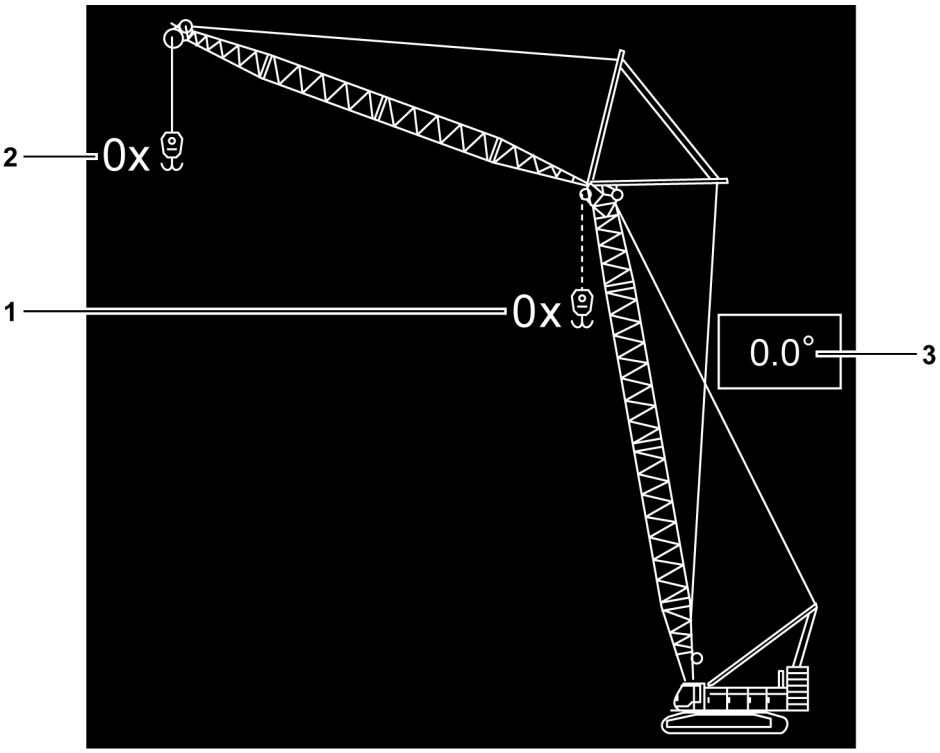

Fig. 2343: Boom configuration 4 - load position 1

1 Reeving load position 2 (main boom head).
2 Reeving load position 1 (jib head).
3 Main boom angle (alpha)

When calling up the screen *Load chart* in boom configuration 4 with load position 1, the screen for entering the main boom angle (Alpha) **3** appears.

LWN/LR.x/V03.01//Auslieferung/2015-06-03/en

4.15.3 Boom configuration 4 - load position 2

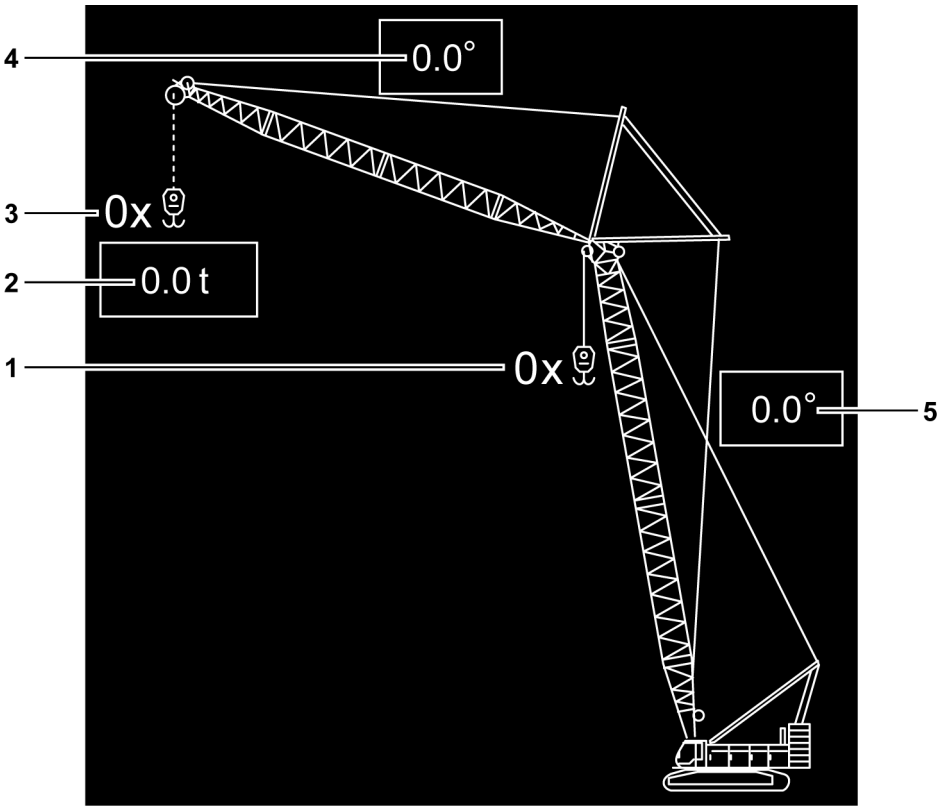

Fig. 2344: Boom configuration 4 - load position 2

1	Reeving load position 2 (main boom head).	**4**	Jib angle (alpha)
2	Load on load position 1 (jib head).	**5**	Main boom angle (alpha)
3	Reeving load position 1 (jib head).		

When calling up the screen *Load chart* in boom configuration 4 with load position 2, a screen for entering the main boom angle (alpha) **5**, the jib angle (beta) **4** and the load in load position 1 (jib head) **2** appears.

The permitted values for load on load position 1 (jib head) **2** can be found in the foreword to the valid load chart.

LWN/LR.x/V03.01//Auslieferung/2015-06-03/en

copyright by
LIEBHERR

4.15.4 Boom configuration 5 - load position 1

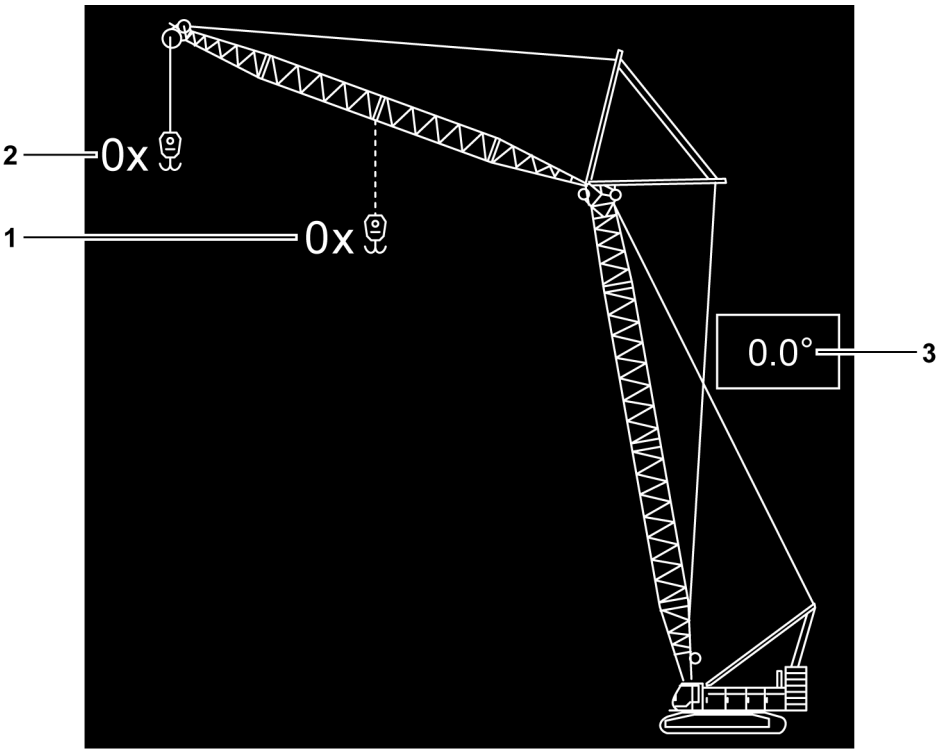

Fig. 2345: Boom configuration 5 - load position 1

1 Reeving load position 3 (midfall)
2 Reeving load position 1 (jib head).
3 Main boom angle (alpha)

When calling up the screen *Load chart* in boom configuration 5 with load position 1, the screen for entering the main boom angle (Alpha) **3** appears.

LWN/LR.x/V03.01//Auslieferung/2015-06-03/en

4.15.5 Boom configuration 5 - load position 3

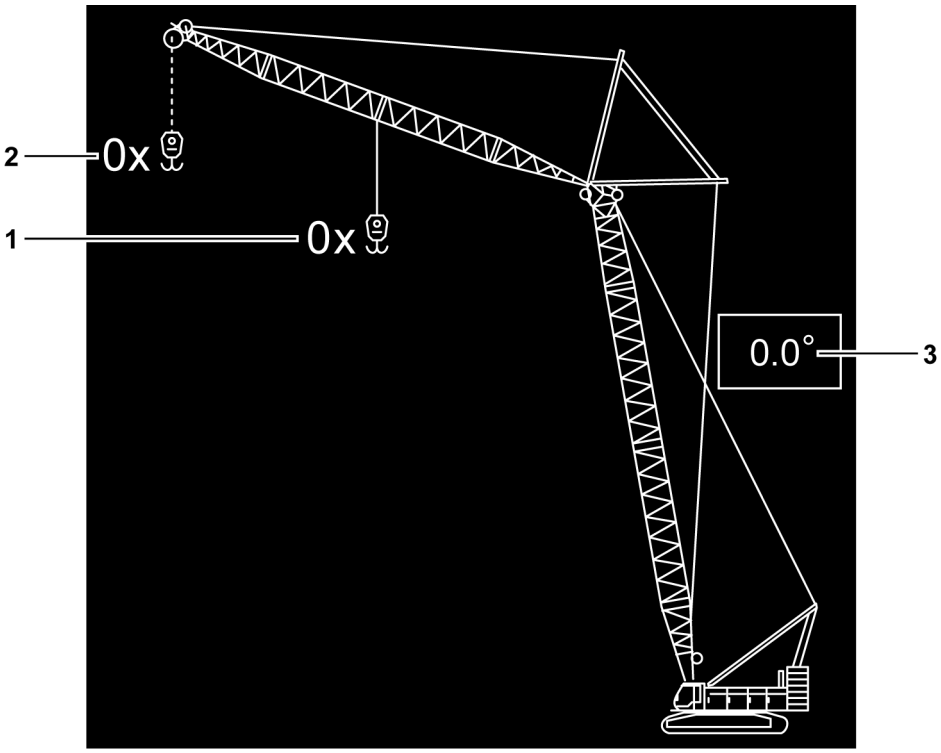

Fig. 2346: Boom configuration 5 - load position 3

1 Reeving load position 3 (midfall)
2 Reeving load position 1 (jib head).
3 Main boom angle (alpha)

When calling up the screen *Load chart* in boom configuration 5 with load position 3, the screen for entering the main boom angle (Alpha) **3** appears.

LWN/LR.x/V03.01//Auslieferung/2015-06-03/en

copyright by LIEBHERR

4.15.6 Boom configuration 6 - load position 2

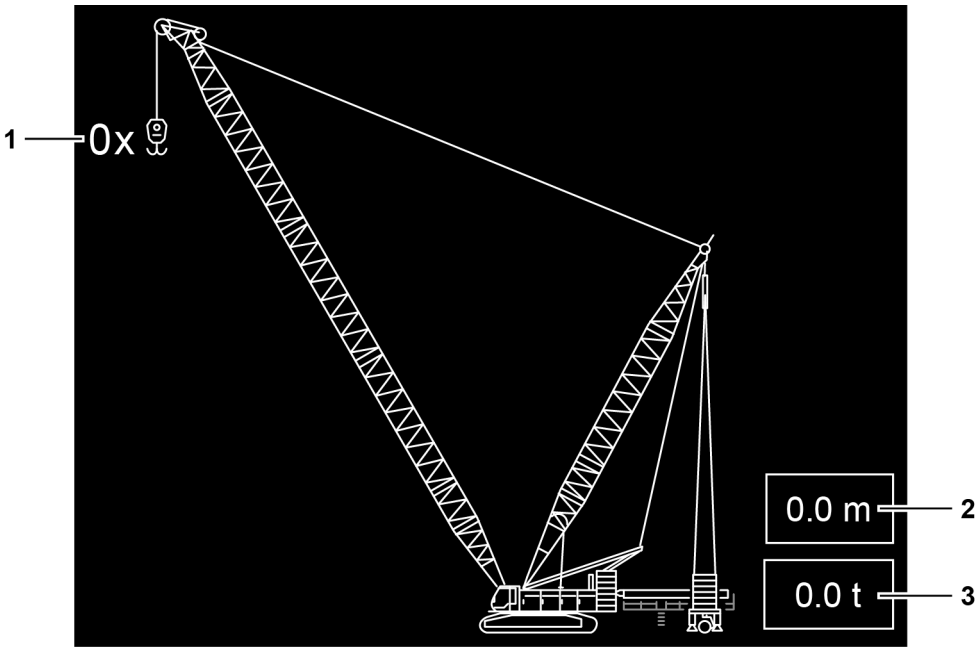

Fig. 2347: Boom configuration 6 - load position 2

1 Reeving load position 2 (main boom head)
2 Radius of counterweight carriage
3 Weight on derrick boom

When calling up the screen *load chart* in boom configuration 6 with load position 2, a screen appears for entering the radius of counterweight carriage **2** and the weight on the derrick boom **3**.

The admissible values are stated in the valid load chart.

LWN/LR.x/V03.01//Auslieferung/2015-06-03/en

4.15.7 Boom configuration 8 - load position 1

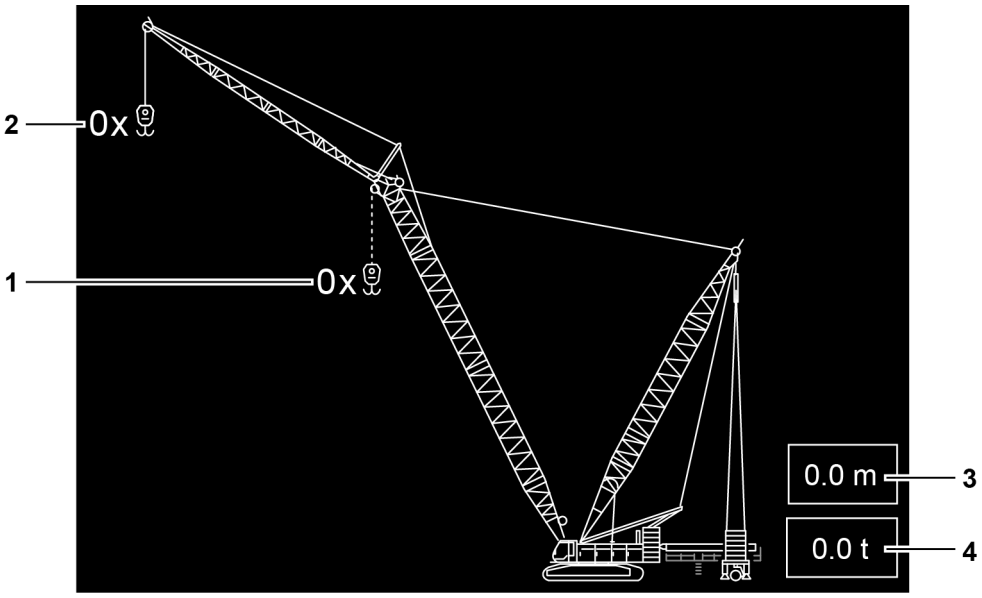

Fig. 2348: Boom configuration 8 - load position 1

1	Reeving load position 2 (main boom head)	**3**	Radius of counterweight carriage
2	Reeving load position 1 (jib head)	**4**	Weight on derrick boom

When calling up the screen *load chart* in boom configuration 8 with load position 1, a screen appears for entering the radius of counterweight carriage **3** and the weight on the derrick boom **4**.

The admissible values are stated in the valid load chart.

LWN/LR.x/V03.01//Auslieferung/2015-06-03/en

copyright by
LIEBHERR

4.15.8 Boom configuration 8 - load position 2

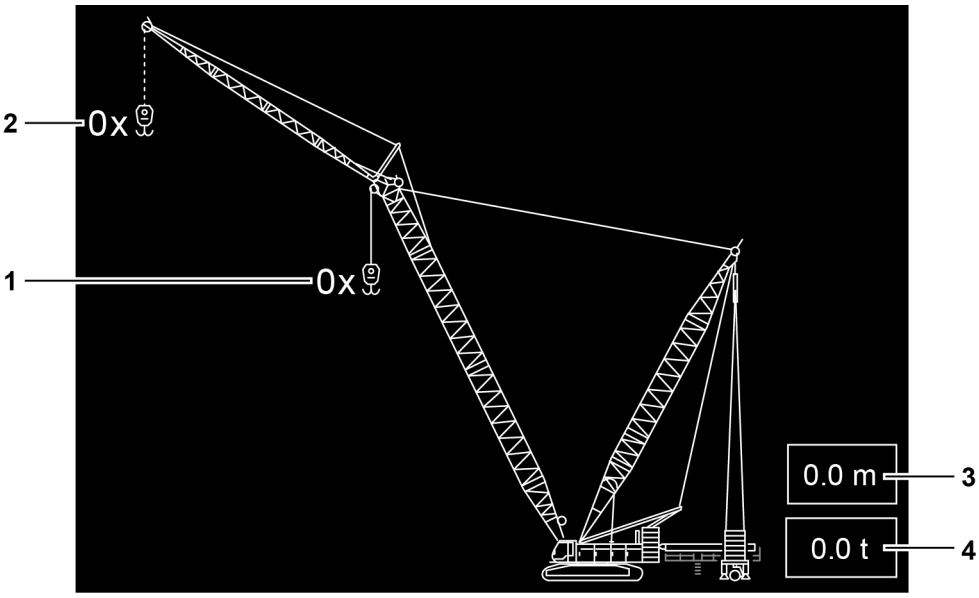

Fig. 2349: Boom configuration 8 - load position 2

1	Reeving load position 2 (main boom head)	**3**	Radius of counterweight carriage
2	Reeving load position 1 (jib head)	**4**	Weight on derrick boom

When calling up the screen *load chart* in boom configuration 8 with load position 2, a screen appears for entering the radius of counterweight carriage **3** and the weight on the derrick boom **4**.

The admissible values are stated in the valid load chart.

LWN/LR.x/V03.01//Auslieferung/2015-06-03/en

4.15.9 Boom configuration 9 - load position 1

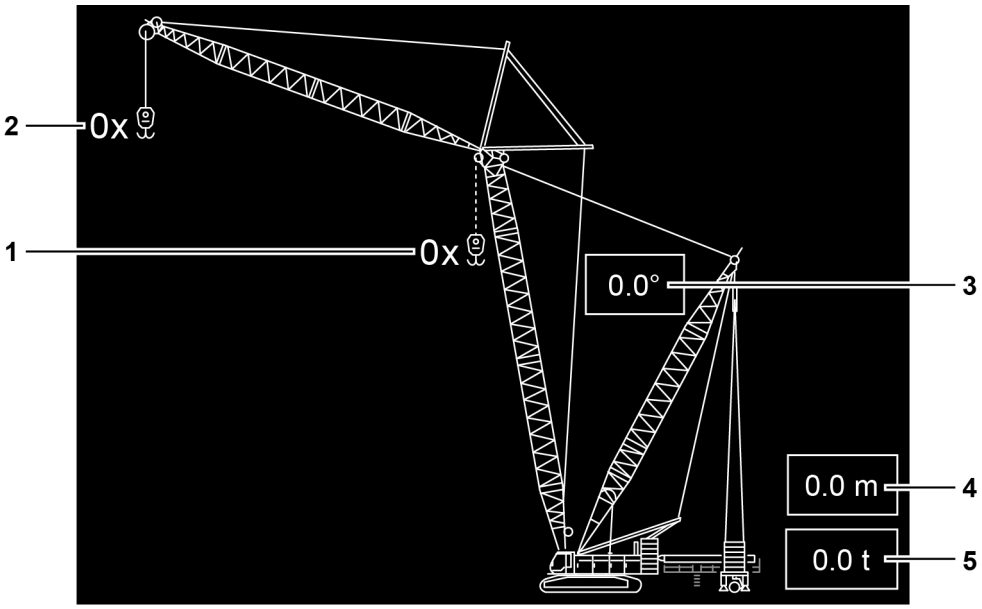

Fig. 2350: Boom configuration 9 - load position 1

1	Reeving load position 2 (main boom head)	**4**	Radius of counterweight carriage
2	Reeving load position 1 (jib head)	**5**	Weight on derrick boom
3	Main boom angle (alpha)		

When calling up the screen *Load chart* in boom configuration 9 with load position 1, a screen appears for entering the main boom angle (alpha) **3**, the radius of the counterweight carriage **4** and the weight on the derrick boom **5**.

The admissible values for the radius of the counterweight carriage **4** and the weight on the derrick boom **5** are stated in the valid load chart.

LWN/LR.x/V03.01//Auslieferung/2015-06-03/en

copyright by
LIEBHERR

4.15.10 Boom configuration 9 - load position 2

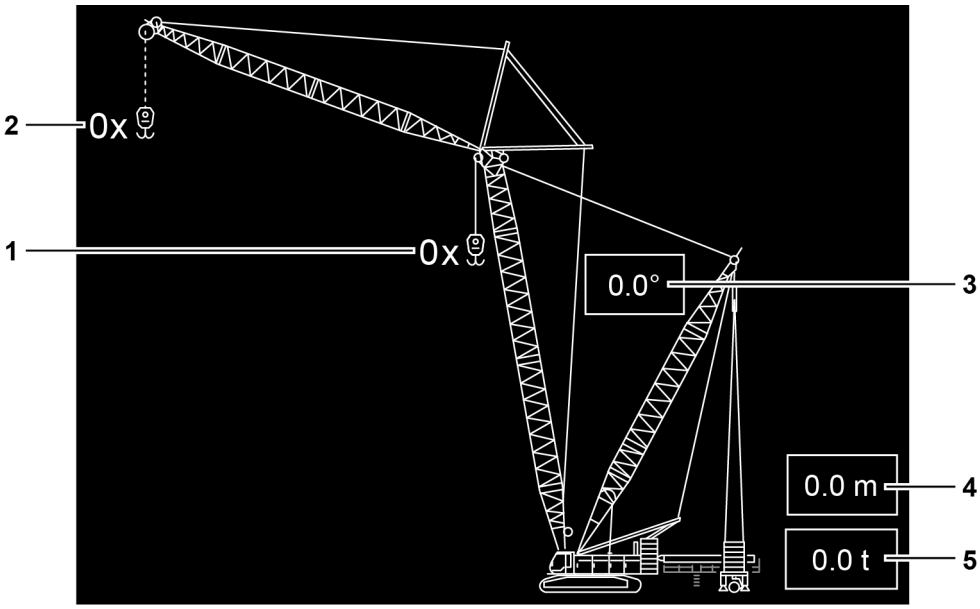

Fig. 2351: Boom configuration 9 - load position 2

1	Reeving load position 2 (main boom head)	**4**	Radius of counterweight carriage
2	Reeving load position 1 (jib head)	**5**	Weight on derrick boom
3	Main boom angle (alpha)		

When calling up the screen *Load chart* in boom configuration 9 with load position 2, a screen appears for entering the main boom angle (alpha) **3**, the radius of the counterweight carriage **4** and the weight on the derrick boom **5**.

The admissible values for the radius of the counterweight carriage **4** and the weight on the derrick boom **5** are stated in the valid load chart.

LWN/LR.x/V03.01//Auslieferung/2015-06-03/en

4.16 Set the load capacity display to zero (taring)

During taring the weight of winch1 and winch2 rope and of the pulley block is set to zero so that only the actual weight of the hoisting load is displayed.

Load taring:
– can be done at any time.
– is best done just before slinging the load.

4.16.1 Setting the load display of winch1 or winch2 to zero

▶ Press the *Settings* button on the monitor.

▶ Press the *Set to zero* button at winch1 or winch2 for more than 1 second on the monitor.
▷ Load display shows zero.

▶ Press the *Reset load display* button at winch1 or winch2 for more than 1 second on the monitor.
▷ Load display shows total load.

LWN/LR.x/V03.01//Auslieferung/2015-06-03/en

copyright by
LIEBHERR

4.17 Single hook operation/two-hook operation

The following hook operations are permitted:
– Single hook operation
– Twin hook operation

In single hook operation, only one hook/pulley block may be moved at any given time. In two-hook operation, two hooks/pulley blocks may be moved at the same time.

Single hook operation is permitted in the following versions:
– Single-hook mode with one winch on one hook
– Single-hook mode with two winches on one hook
– Single-hook mode with two winches on two hooks

Two-hook operation is permitted in the following versions:
– Twin-hook mode with two hooks on two loads
– Twin-hook mode with two hooks on one load

All the permitted hook operations are demonstrated on the diagrams below.

WARNING
Using an unauthorised hook operation!
Severe injuries, damage to machine.

▶ Only use authorised hook operations.

DANGER
Improper reeving of winch1 or winch2 rope!
Structural breakdown, load breakaway.

▶ Reeve the rope according to the rope reeving system.

If a deviation from the rope reeving systems is necessary or no rope reeving system is available:

▶ Ensure that the selected rope reeving system loads the boom head and entire boom symmetrically.

▶ Make sure that winch1 or winch2 rope do not contact anywhere.

▶ Make sure that the diagonal pull of the winch1 or winch2 rope do not exceed 2°.

▶ Ensure that the pulley blocks/hooks do not collide.

▶ Fit the hoist limit switch weight for winch1 on the winch1 rope.

▶ Fit the hoist limit switch weight for winch2 on the winch2 rope.

▶ It is preferable to fit the hoist limit switch weight when the rope is stationary.

▶ Ensure that the hoist limit switch chains do not cross over.

▶ Ensure that the hoist limit switch chains do not touch at any point.

▶ Only ever bypass unused hoist limit switches.

For special loads, the appropriate rope reeving systems may be obtained from Liebherr after sales service **exclusively on providing the following information**:
– Machine type
– Serial number
– Full details of the boom configuration and counterweight in place
– Details of the pulley block/hook in use

LWN/LR.x/V03.01//Auslieferung/2015-06-03/en

copyright by
LIEBHERR

– A detailed description of the work to be carried out

Notes on the diagrams and symbols used

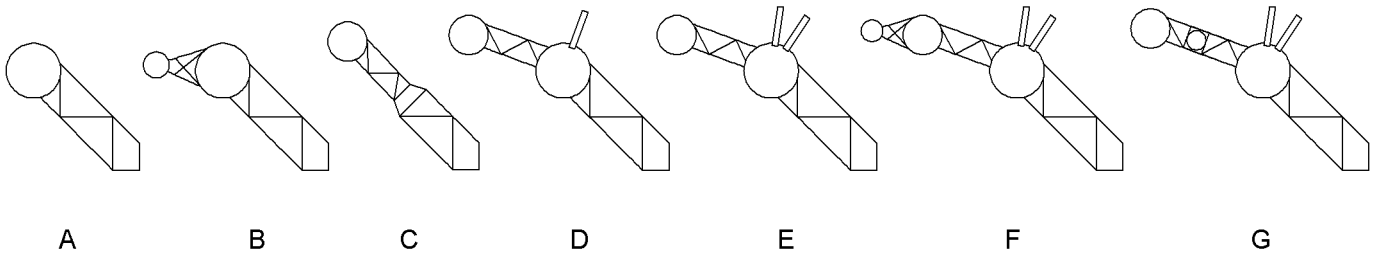

Fig. 2355: Diagram of the boom configurations

A Main boom

B Main boom with auxiliary jib attached

C Main boom + reducing piece

D Main boom + fixed jib

E Main boom + luffing jib

F Main boom + luffing jib with auxiliary jib attached

G Main boom + luffing jib + Midfall

Symbol	Meaning
1 ②	The numbers 1 or 2 denote winch1 or winch2 rope. 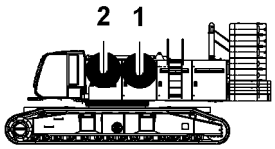
	The circle marks the rope of winch1 or winch2 whose reeving must be preselected when programming the setup.
①=②	Select reeving of winch1 or winch2 rope when programming the setup. Rope reeving is symmetrical.
①+②	Select total reeving of winch1 and winch2 rope when programming the setup.
①②̲	Select the lower reeving when programming the setup.
●	Select the relevant reeving with this boom head/load position.
|	Empty hook
⊥	Load
⊥	Empty hook with specified dead weight
⊔	Twin-hook mode with two hooks on one load
V	Single-hook mode with two winches on one hook
Directional instructions are given from the machine operator's point of view in the cabin.	

Tab. 375: Meaning of the symbols

LWN/LR.x/V03.01//Auslieferung/2015-06-03/en

copyright by
LIEBHERR

4.17.1 Single-hook mode with one winch on one hook

Ensure that the following conditions are fulfilled:
❑ Only winch1 rope is reeved.

Main boom

Load on boom head section (winch1 rope)

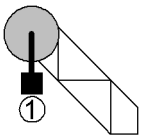

▶ Reeve winch1 rope on the boom head section.

▶ Select main boom head.

▶ Select reeving of winch1 rope at main boom head.

Load on boom head section (winch1 rope) with auxiliary jib attached

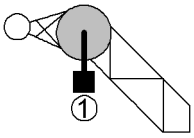

No load chart exists for this configuration. The static moment of the auxiliary jib reduces the valid lifting capacities of the main boom.

The auxiliary jib falsifies the load display on the *Operation* screen. The load moment limiter switches off at the maximum permitted load moment.

▶ Reeve winch1 rope on the boom head section.

▶ Select main boom head.

▶ Select reeving of winch1 rope at main boom head.

▶ Calculate the reduced lifting capacity before every lifting operation.

For a rough calculation of the reduced lifting capacity with auxiliary jib attached (36 t (79300 lb)):

$\mathbf{SWL}_{RED}$ = $\mathbf{SWL}_{HPT}$ - 1000 kg (2,205 lb)

$\mathbf{SWL}_{RED}$ = reduced lifting capacity for hoisting with the boom head section
$\mathbf{SWL}_{HPT}$ = lifting capacity for hoisting with the boom head section according to the load chart

To precisely calculate the reduced lifting capacity:

$$\mathbf{SWL}_{RED} = \frac{SWL_{HPT} * (R_{HPT} - X) - (SWL_{SP} + m_{SP}) * (R_{HPT} - X + R_{SP})}{(R_{HPT} - X)}$$

Fig. 2369: How to calculate the reduced load

$\mathbf{SWL}_{RED}$ = reduced lifting capacity for hoisting with the boom head section
$\mathbf{SWL}_{HPT}$ = maximum lifting capacity for main boom from the load chart at R_{HPT}
$\mathbf{R}_{HPT}$ = radius of the main boom
X = Distance between rotation axis and main boom pivot point
$\mathbf{SWL}_{SP}$ = Load on auxiliary jib (in this case no weight)
$\mathbf{m}_{SP}$ = weight of the auxiliary jib
$\mathbf{R}_{SP}$ = Radius enlargement through auxiliary jib

▶ Note the reductions in the valid lifting capacities due to the auxiliary jib attached.

LWN/LR.x/V03.01//Auslieferung/2015-06-03/en

copyright by LIEBHERR

Main boom + reducing piece

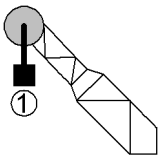

Load on boom head section (winch1 rope)

- ▶ Reeve winch1 rope on the boom head section.
- ▶ Select main boom head.
- ▶ Select reeving of winch1 rope at main boom head.

Main boom + fixed jib

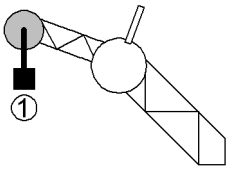

Load on jib head section (winch1 rope)

- ▶ Reeve winch1 rope on jib head section.
- ▶ Select reeving of winch1 rope at jib head.
- ▶ Select load position 1 (jib head).

Main boom + luffing jib

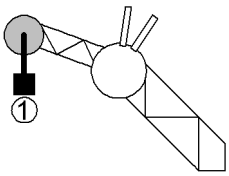

Load on jib head section (winch1 rope)

- ▶ Reeve winch1 rope on jib head section.
- ▶ Select reeving of winch1 rope at jib head.
- ▶ Select load position 1 (jib head).

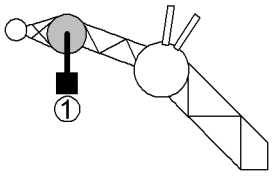

Load on jib head section (winch1 rope) with auxiliary jib attached

No load chart exists for this configuration. The static moment of the auxiliary jib reduces the valid lifting capacities of the jib.

The auxiliary jib falsifies the load display on the *Operation* screen. The load moment limiter switches off at the maximum permitted load moment.

- ▶ Reeve winch1 rope on jib head section.
- ▶ Select reeving of winch1 rope at jib head.
- ▶ Select load position 1 (jib head).
- ▶ Calculate the reduced lifting capacity before every lifting operation.

For a rough calculation of the reduced lifting capacity with auxiliary jib attached (30 t (66.000 lb)):

$\mathbf{SWL}_{RED}$ = $\mathbf{SWL}_{NDL}$ - 500 kg (1,102 lb)

For a rough calculation of the reduced lifting capacity with auxiliary jib attached (15 t (33.000 lb)):

$\mathbf{SWL}_{RED}$ = $\mathbf{SWL}_{NDL}$ - 400 kg (882 lb)

$\mathbf{SWL}_{RED}$ = reduced lifting capacity for hoisting with the jib head section
$\mathbf{SWL}_{NDL}$ = lifting capacity for hoisting with the jib head section according to the load chart

- ▶ Note the reductions in the valid lifting capacities due to the auxiliary jib attached.

LWN/LR.x/V03.01//Auslieferung/2015-06-03/en

copyright by
LIEBHERR

Main boom + luffing jib + Midfall

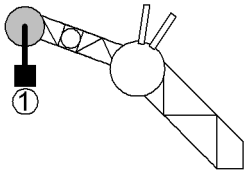

Load on jib head section (winch1 rope)

- ▶ Reeve winch1 rope on jib head section.
- ▶ Select reeving of winch1 rope at jib head.
- ▶ Select load position 1 (jib head).

4.17.2 Single-hook mode with two winches on one hook

With long main booms and multiple reeving, the winch1 or winch2 rope may become too short. Under certain circumstances it is permitted for winch1 and winch2 rope to be reeved via the boom head section or the jib head section 1507 on a single hook.

DANGER
Wrong procedure in single-hook mode with two winches on one hook!
Structural failure, load breakaway.

- ▶ Use ropes of the same length and quality for winch1 and winch2.
- ▶ Winch1 and winch2 ropes must only be reeved in accordance with the rope reeving diagrams.
- ▶ Winch1 and winch2 ropes must only be reeved on a pulley block.
- ▶ Select the total of winch1 and winch2 rope reeving with the main boom head or jib head.
- ▶ Activate winch synchronization on control panel *X23*.

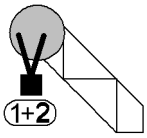

Load on main boom head (winch1 and winch2 rope)

- ▶ Winch1 and winch2 ropes must only be reeved in accordance with the rope reeving diagrams.
- ▶ Select main boom head.
- ▶ Select total reeving of winch1 and winch2 rope at main boom head.
- ▶ In order to obtain an accurate rope measuring system value on the *Operation* screen: adjust reeving of winch2 rope to the actual number of reeves of winch2 rope (For more information see: 4.31 Rope measuring system*, page 980) .

Note
The value displayed by the rope measuring system for winch1 is incorrect!

- ▶ Pay attention only to the value displayed by the rope measuring system for winch 2.

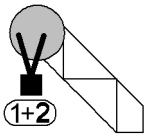

Load on jib head 1507 (winch1 and winch2 rope)

- ▶ Winch1 and winch2 ropes must only be reeved in accordance with the rope reeving diagrams.
- ▶ Select 1507 jib head.
- ▶ Select total reeving of winch1 and winch2 rope at jib head 1507.

LWN/LR.x/V03.01/Auslieferung/2015-06-03/en

▶ In order to obtain an accurate rope length measurement value on the *Operation* screen: adjust reeving of winch2 rope to the actual number of reeves of winch2 rope (For more information see: 4.31 Rope measuring system*, page 980) .

Note
The value displayed by the rope measuring system for winch1 is incorrect!

▶ Pay attention only to the value displayed by the rope measuring system for winch 2.

4.17.3 Single-hook mode with two winches on two hooks

With single-hook mode with two winches on two loads, winch1 rope and winch2 rope are reeved. However, the load is moved with one rope only. The second rope stands still.

The ropes may be reeved in a non-symmetrical manner.

DANGER
Wrong procedure in single-hook mode with two winches on two hooks!
Structural failure, load breakaway.

▶ Only move the load using one rope.

▶ Only move with one rope at any given time.

If the load is moved with the other rope or the load position changes:
▶ Reprogram the setup.

DANGER
Maximum permissible lifting capacity is exceeded!
Risk of machine toppling over, structural breakdown.

▶ Take into account all relevant weights as the total load.

▶ Do not exceed the maximum permitted lifting capacity.

The total load consists of:
– the weight of the load to be lifted
– Weight of both hooks or pulley blocks
– The weight of all suspended ropes
– The weight of the load pick-up equipment
– Weight of the auxiliary jib (if attached)

Main boom

Load on boom head section (winch1 rope)

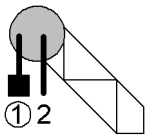

▶ Reeve winch1 rope on the boom head section.

▶ Reeve winch2 rope on the boom head section.

▶ Select main boom head.

▶ Select reeving of winch1 rope at main boom head.

LWN/LR.x/V03.01//Auslieferung/2015-06-03/en

copyright by
LIEBHERR

Load on boom head section (winch2 rope)

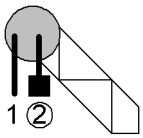

- ▶ Reeve winch1 rope on the boom head section.
- ▶ Reeve winch2 rope on the boom head section.
- ▶ Select main boom head.
- ▶ Select reeving of winch2 rope at main boom head.

Load on boom head section (winch1 rope)

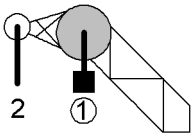

No load chart exists for this configuration. The static moment of the auxiliary jib reduces the valid lifting capacities of the main boom.

The auxiliary jib falsifies the load display on the *Operation* screen. The load moment limiter switches off at the maximum permitted load moment.

- ▶ Reeve winch1 rope on the boom head section.
- ▶ Guide the left winch2 rope over the boom head section and reeve onto the auxiliary jib.
- ▶ Select main boom head.
- ▶ Select reeving of winch1 rope at main boom head.
- ▶ Calculate the reduced lifting capacity before every lifting operation.

For a rough calculation of the reduced lifting capacity at auxiliary jib attached (36 t (79300 lb)) and empty hook with 600 kg (1,323 lb):

$\mathbf{SWL}_{RED}$ = $\mathbf{SWL}_{HPT}$ - 2000 kg (4,409 lb)

For a rough calculation of the reduced lifting capacity at auxiliary jib attached (36 t (79300 lb)) and empty hook with 1500 kg (3,307 lb):

$\mathbf{SWL}_{RED}$ = $\mathbf{SWL}_{HPT}$ - 3250 kg (7,165 lb)

$\mathbf{SWL}_{RED}$ = reduced lifting capacity for hoisting with the boom head section
$\mathbf{SWL}_{HPT}$ = lifting capacity for hoisting with the boom head section according to the load chart

To precisely calculate the reduced lifting capacity:

$$\mathbf{SWL}_{RED} = \frac{SWL_{HPT} * (R_{HPT} - X) - (SWL_{SP} + m_{SP}) * (R_{HPT} - X + R_{SP})}{(R_{HPT} - X)}$$

Fig. 2380: How to calculate the reduced load

$\mathbf{SWL}_{RED}$ = reduced lifting capacity for hoisting with the boom head section
$\mathbf{SWL}_{HPT}$ = maximum lifting capacity for main boom from the load chart at R_{HPT}
$\mathbf{R}_{HPT}$ = radius of the main boom
X = Distance between rotation axis and main boom pivot point
$\mathbf{SWL}_{SP}$ = Load on auxiliary jib (in this case the empty hook weight)
$\mathbf{m}_{SP}$ = weight of the auxiliary jib
$\mathbf{R}_{SP}$ = Radius enlargement through auxiliary jib

- ▶ Note the reductions in the valid lifting capacities due to the auxiliary jib attached.

Load on auxiliary jib (winch2 rope)

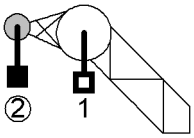

- ▶ Reeve winch1 rope on the boom head section.
- ▶ Guide the left winch2 rope over the boom head section and reeve onto the auxiliary jib.
- ▶ Select auxiliary jib.

LWN/LR.x/V03.01/Auslieferung/2015-06-03/en

▶ Select reeving of winch2 rope at auxiliary jib.

CAUTION
Empty hook weight on the boom head section is not permitted!
Incorrect load display. The Load Moment Limiter switches off at the maximum permitted load moment.

▶ Keep to the specified empty hook weight on the main boom head stipulated in the foreword to the valid load chart.

▶ Keep to the specified empty hook weight on the main boom head stipulated in the foreword to the valid load chart.

Main boom + reducing piece

Load on main boom head (winch1 rope)

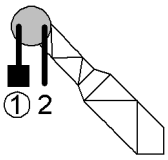

▶ Reeve winch1 rope on the boom head section.
▶ Reeve winch2 rope on the boom head section.
▶ Select main boom head.
▶ Select reeving of winch1 rope at main boom head.

Load on boom head section (winch2 rope)

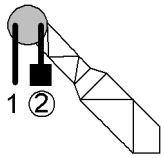

▶ Reeve winch1 rope on the boom head section.
▶ Reeve winch2 rope on the boom head section.
▶ Select main boom head.
▶ Select reeving of winch2 rope at main boom head.

Main boom + fixed jib

Load on jib head section (winch1 rope)

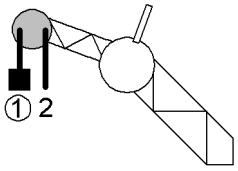

▶ Reeve winch1 rope on jib head section.
▶ Reeve winch2 rope on jib head section.
▶ Select reeving of winch1 rope at jib head.
▶ Select load position 1 (jib head).

Load on jib head section (winch2 rope)

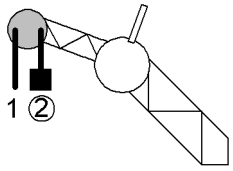

▶ Reeve winch1 rope on jib head section.
▶ Reeve winch2 rope on jib head section.
▶ Select reeving of winch2 rope at jib head.
▶ Select load position 1 (jib head).

Load on jib head section (winch1 rope)

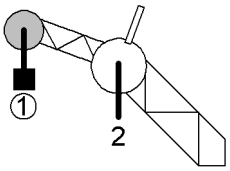

▶ Reeve winch1 rope on jib head section.
▶ Reeve winch2 rope on the boom head section.
▶ Select reeving of winch1 rope at jib head.
▶ Select load position 1 (jib head).

LWN/LR.x/V03.01//Auslieferung/2015-06-03/en

copyright by
LIEBHERR

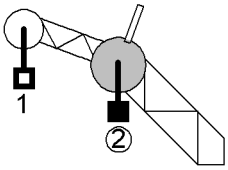

Load on boom head section (winch2 rope)

- ▶ Reeve winch1 rope on jib head section.
- ▶ Reeve winch2 rope on the boom head section.
- ▶ Select reeving of winch2 rope at main boom head.
- ▶ Select load position 2 (main boom head).

CAUTION
Empty hook weight at load position 1 (jib head section) is not permitted!
Incorrect load display. The Load Moment Limiter switches off at the maximum permitted load moment.

- ▶ Keep to the specified empty hook weight at load position 1 (jib head) stipulated in the foreword to the load chart.
- ▶ Ensure that the empty hook weight does not exceed the jib lifting capacity.
- ▶ Ensure that the empty hook weight is more than the permitted minimum weight of the pulley block/hook (For more information see: 6.4 Choosing the correct hook or pulley block, page 1051) .

- ▶ Keep to the specified empty hook weight at load position 1 (jib head) stipulated in the foreword to the load chart.
  - ▷ Winch1 is locked.

Main boom + luffing jib

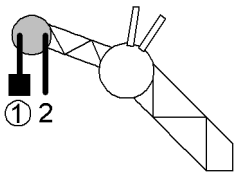

Load on jib head section (winch1 rope)

- ▶ Reeve winch1 rope on jib head section.
- ▶ Reeve winch2 rope on jib head section.
- ▶ Select reeving of winch1 rope at jib head.
- ▶ Select load position 1 (jib head).

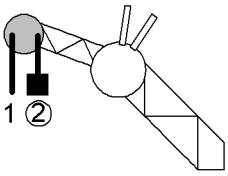

Load on jib head section (winch2 rope)

- ▶ Reeve winch1 rope on jib head section.
- ▶ Reeve winch2 rope on jib head section.
- ▶ Select reeving of winch2 rope at jib head.
- ▶ Select load position 1 (jib head).

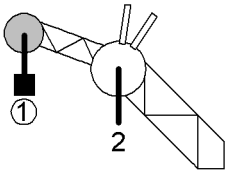

Load on jib head section (winch1 rope)

- ▶ Reeve winch1 rope on jib head section.
- ▶ Reeve winch2 rope on the boom head section.
- ▶ Select reeving of winch1 rope at jib head.
- ▶ Select load position 1 (jib head).

LWN/LR.x/V03.01/Auslieferung/2015-06-03/en

copyright by
LIEBHERR

Load on boom head section (winch2 rope)

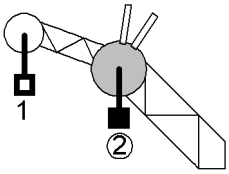

- ▶ Reeve winch1 rope on jib head section.
- ▶ Reeve winch2 rope on the boom head section.
- ▶ Select reeving of winch2 rope at main boom head.
- ▶ Select load position 2 (main boom head).

CAUTION
Exceeding of admissible empty hook weight on load position 1 (jib head)!
The Load Moment Limiter switches off at the maximum permitted load moment.

- ▶ Do not exceed the specified empty hook weight at load position 1 (jib head) stipulated in the foreword to the load chart.
- ▶ Ensure that the empty hook weight does not exceed the jib lifting capacity.
- ▶ Ensure that the empty hook weight is more than the permitted minimum weight of the pulley block/hook (For more information see: 6.4 Choosing the correct hook or pulley block, page 1051) .

- ▶ Do not exceed the specified empty hook weight at load position 1 (jib head) stipulated in the foreword to the load chart.

Note

- ▶ To maximise the valid lifting capacities for hoisting using the main boom: raise the luffing jib to the maximum angle.

Load on jib head section (winch1 rope) with auxiliary jib attached

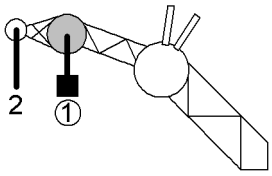

No load chart exists for this configuration. The static moment of the auxiliary jib including the empty hook reduces the valid lifting capacities of the jib.

The auxiliary jib including the empty hook falsify the load display on the *Operation* screen. The load moment limiter switches off at the maximum permitted load moment.

- ▶ Reeve winch1 rope on jib head section.
- ▶ Guide the left winch2 rope over the jib head section and reeve onto the auxiliary jib.
- ▶ Select reeving of winch1 rope at jib head.
- ▶ Select load position 1 (jib head).
- ▶ Calculate the reduced lifting capacity before every lifting operation.

For a rough calculation of the reduced lifting capacity at auxiliary jib attached (30 t (66.000 lb)) and empty hook with 900 kg (1,984 lb):

$\mathbf{SWL}_{RED}$ = $\mathbf{SWL}_{NDL}$ - 1400 kg (3,086 lb)

For a rough calculation of the reduced lifting capacity at auxiliary jib attached (15 t (33.000 lb)) and empty hook with 600 kg (1,323 lb):

$\mathbf{SWL}_{RED}$ = $\mathbf{SWL}_{NDL}$ - 1100 kg (2,425 lb)

$\mathbf{SWL}_{RED}$ = reduced lifting capacity for hoisting with the jib head section
$\mathbf{SWL}_{NDL}$ = lifting capacity for hoisting with the jib head section according to the load chart

- ▶ Note the reductions in the valid lifting capacities due to the auxiliary jib attached.

LWN/LR.x/V03.01//Auslieferung/2015-06-03/en

copyright by
LIEBHERR

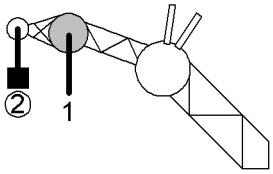

Load on auxiliary jib (winch2 rope)

No load chart exists for this configuration. The static moment of the auxiliary jib and the empty hook reduce the valid lifting capacities of the jib.

The auxiliary jib and the empty hook falsify the load display on the *Operation* screen. The load moment limiter switches off at the maximum permitted load moment.

The auxiliary jib falsifies the radius display on the *Operation* screen. The auxiliary jib falsifies the lifting height display on the *Operation* screen.

- ▶ Reeve winch1 rope on jib head section.
- ▶ Guide the left winch2 rope over the jib head section and reeve onto the auxiliary jib.
- ▶ Select reeving of winch2 rope at jib head.
- ▶ Select load position 1 (jib head).
- ▶ Calculate the reduced lifting capacity before every lifting operation.

For a rough calculation of the reduced lifting capacity with auxiliary jib attached (30 t (66.000 lb)):

$\mathbf{SWL}_{RED}$ = $\mathbf{SWL}_{NDL}$ - 500 kg (1,102 lb)

For a rough calculation of the reduced lifting capacity with auxiliary jib attached (15 t (33.000 lb)):

$\mathbf{SWL}_{RED}$ = $\mathbf{SWL}_{NDL}$ - 400 kg (882 lb)

$\mathbf{SWL}_{RED}$ = reduced lifting capacity for hoisting with the auxiliary jib
$\mathbf{SWL}_{NDL}$ = lifting capacity for hoisting with the jib head section according to the load chart

- ▶ Note the reductions in the valid lifting capacities due to the auxiliary jib attached.

Main boom + luffing jib + Midfall

Load on midfall (winch2 rope)

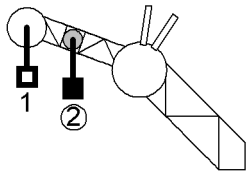

- ▶ Reeve winch1 rope on jib head section.
- ▶ Reeve winch2 rope on midfall.
- ▶ Select reeving of winch2 rope at midfall.
- ▶ Select load position 3 (midfall).

CAUTION
Empty hook weight at load position 1 (jib head section) is not permitted!
Incorrect load display. The Load Moment Limiter switches off at the maximum permitted load moment.

- ▶ Keep to the specified empty hook weight at load position 1 (jib head) stipulated in the foreword to the load chart.
- ▶ Ensure that the empty hook weight does not exceed the jib lifting capacity.
- ▶ Ensure that the empty hook weight is more than the permitted minimum weight of the pulley block/hook (For more information see: 6.4 Choosing the correct hook or pulley block, page 1051) .

- ▶ Do not exceed the specified empty hook weight at load position 1 (jib head) stipulated in the foreword to the load chart.

LWN/LR.x/V03.01//Auslieferung/2015-06-03/en

copyright by
LIEBHERR

▷ Winch1 is locked.

4.17.4 Twin-hook mode with two hooks on two loads

Twin-hook mode with two hooks on two loads represents the principle of main hoist + auxiliary hoist.

DANGER
Maximum permissible lifting capacity is exceeded!
Structural breakdown, toppling of machine.

▶ Take into account all relevant weights as the total load.

▶ Do not exceed the maximum permitted lifting capacity.

The total load consists of:
– Weight of the loads to be lifted
– Weight of both hooks or pulley blocks
– The weight of all suspended ropes
– The weight of the load pick-up equipment
– Weight of the auxiliary jib (if attached)

Main boom

Load on boom head section (winch1 rope) + load on boom head section (winch2 rope)

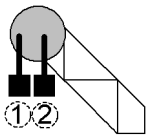

▶ Reeve winch1 rope on the boom head section.

▶ Reeve winch2 rope on the boom head section.

▶ Select main boom head.

▶ Select lower reeving of the two ropes at the main boom head.

Load on boom head section (winch1 rope) + load on auxiliary jib (winch2 rope)

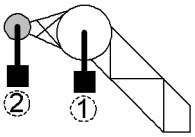

▶ Reeve winch1 rope on the boom head section.

▶ Guide the left winch2 rope over the boom head section and reeve onto the auxiliary jib.

▶ Select auxiliary jib.

▶ Select lower reeving of the two ropes at the auxiliary jib.

Main boom + reducing piece

Load on boom head section (winch1 rope) + load on boom head section (winch2 rope)

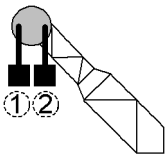

▶ Reeve winch1 rope on the boom head section.

▶ Reeve winch2 rope on the boom head section.

▶ Select main boom head.

▶ Select lower reeving of the two ropes at the main boom head.

LWN/LR.x/V03.01//Auslieferung/2015-06-03/en

copyright by
LIEBHERR

Main boom + fixed jib

Load on jib head section (winch1 rope) + load on jib head section (winch2 rope)

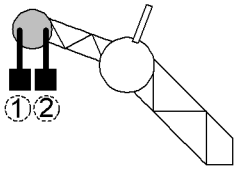

- ▶ Reeve winch1 rope on jib head section.
- ▶ Reeve winch2 rope on jib head section.
- ▶ Select lower reeving of the two ropes at the jib head.
- ▶ Select load position 1 (jib head).

Load on jib head section (winch1 rope) + load on main boom head section (winch2 rope)

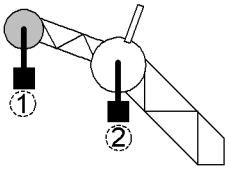

- ▶ Reeve winch1 rope on jib head section.
- ▶ Reeve winch2 rope on the boom head section.
- ▶ Select lower reeving of the two ropes at the jib head.
- ▶ Select load position 1 (jib head).

Main boom + luffing jib

Load on jib head section (winch1 rope) + load on jib head section (winch2 rope)

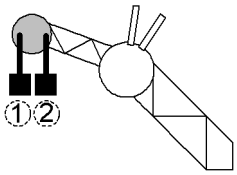

- ▶ Reeve winch1 rope on jib head section.
- ▶ Reeve winch2 rope on jib head section.
- ▶ Select lower reeving of the two ropes at the jib head.
- ▶ Select load position 1 (jib head).

Load on jib head section (winch1 rope) + load on auxiliary jib (winch2 rope)

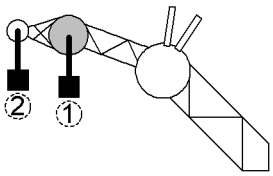

No load chart exists for this configuration. The static moment of the auxiliary jib reduces the valid lifting capacities of the jib.

The auxiliary jib falsifies the load display on the *Operation* screen. The load moment limiter switches off at the maximum permitted load moment.

The auxiliary jib falsifies the radius display on the *Operation* screen. The auxiliary jib falsifies the lifting height display on the *Operation* screen.

- ▶ Reeve winch1 rope on jib head section.
- ▶ Guide the left winch2 rope over the boom head section and reeve onto the auxiliary jib.
- ▶ Select lower reeving of the two ropes at the jib head.
- ▶ Select load position 1 (jib head).
- ▶ Calculate the reduced lifting capacity before every lifting operation.

For a rough calculation of the reduced lifting capacity at auxiliary jib attached (30 t (66.000 lb)) and empty hook with 600 kg (1,323 lb):

$\mathbf{SWL}_{RED}$ = $\mathbf{SWL}_{NDL}$ - 900 kg (1,984 lb)

For a rough calculation of the reduced lifting capacity at auxiliary jib attached (15 t (33.000 lb)) and empty hook with 600 kg (1,323 lb):

$\mathbf{SWL}_{RED}$ = $\mathbf{SWL}_{NDL}$ - 800 kg (1,764 lb)

LWN/LR.x/V03.01//Auslieferung/2015-06-03/en

copyright by LIEBHERR

SWL_{RED} = reduced lifting capacity for hoisting with the jib head section
SWL_{NDL} = lifting capacity for hoisting with the jib head section according to the load chart

▶ Note the reductions in the valid lifting capacities due to the auxiliary jib attached.

Load on jib head section (winch1 rope) + load on main boom head section (winch2 rope)

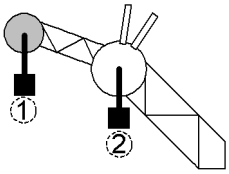

▶ Reeve winch1 rope on jib head section.

▶ Reeve winch2 rope on the boom head section.

▶ Select lower reeving of the two ropes at the jib head.

▶ Select load position 1 (jib head).

4.17.5 Twin-hook mode with two hooks on one load

Twin-hook mode moves a load using two hooks. Twin-hook mode falsifies the load display on the *Operation* screen. The load moment limiter switches off at the maximum permitted load moment.

Two hooks on one load is admissible.

Moving two hooks at the same time is admissible.

Winch synchronisation is permitted.

DANGER
Wrong procedure in twin-hook mode with two hooks on one load!

▶ Avoid longitudinal diagonal pull.

▶ Do not exceed maximum lateral diagonal pull of 1 %.

▶ Ensure that the load can be raised by the two hooks in unison.

If both ropes are reeved at the same boom head/load position:
▶ Reeve the ropes symmetrically.

If both ropes are reeved at the different boom heads/load positions:
▶ Reeve both ropes at least as often as has been selected on the relevant boom head/load position.

If winch synchronisation is used:
▶ Activate winch synchronization on control panel *X23*.

DANGER
Maximum permissible lifting capacity is exceeded!
Risk of machine toppling over, structural breakdown.

▶ Take into account all relevant weights as the total load.

▶ Do not exceed the maximum permitted lifting capacity.

The total load consists of:
– the weight of the load to be lifted
– Weight of both hooks or pulley blocks
– The weight of all suspended ropes
– The weight of the load pick-up equipment
– Weight of the auxiliary jib (if attached)

LWN/LR.x/V03.01//Auslieferung/2015-06-03/en

copyright by
LIEBHERR

Swinging the load when load is on different boom heads/load positions

DANGER
Wrong procedure swinging the load in twin-hook mode!
Risk of machine toppling over, structural breakdown.

▶ The load must only be swung in the direction that most reduces the load moment.

Ensure that the following conditions are fulfilled:
❑ The load with the largest radius is suspended on the boom head/load position.

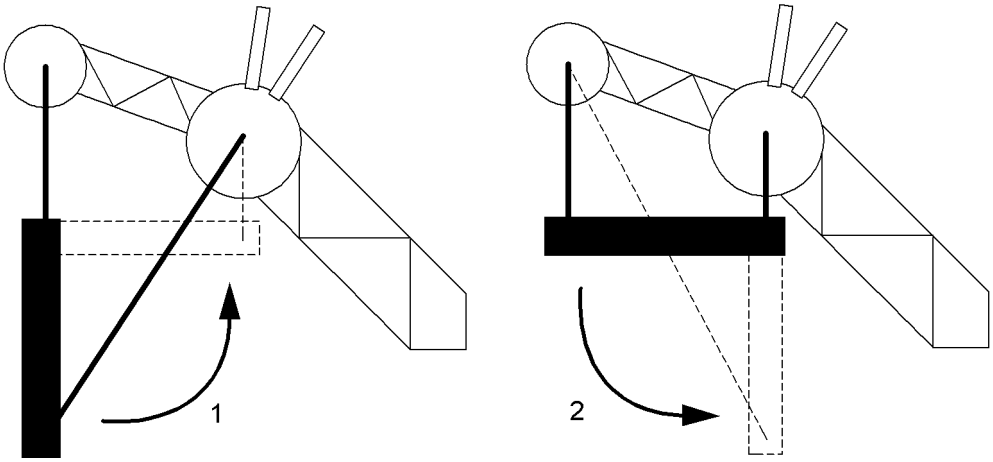

Fig. 2403: Diagram of the swinging process with the lowest load moment

1 Swinging the load towards the basic machine

2 Swinging the load towards the basic machine

▶ Only swing the load towards the basic machine.
▷ The load moment is reduced.

Main boom

Load on boom head section (winch1 and winch2 rope)

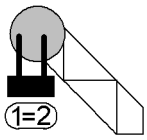

▶ Reeve winch1 rope on the boom head section.

▶ Reeve winch2 rope on the boom head section.

▶ Reeve winch2 rope as often as winch1 rope.

▶ Select main boom head.

▶ Select reeving of winch1 rope (= reeving of winch2 rope) at main boom head.

▶ Activate winch synchronization on control panel *X23* if required.

Load on boom head section (winch1 rope) + auxiliary jib (winch2 rope)

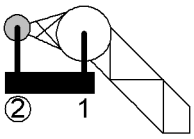

▶ Reeve winch1 rope on the boom head section.

▶ Guide the left winch2 rope over the boom head section and reeve onto the auxiliary jib.

▶ Reeve winch1 rope at the boom head section at least as often as winch2 rope on the auxiliary jib.

LWN/LR.x/V03.01/Auslieferung/2015-06-03/en

copyright by
LIEBHERR

- ▶ Select auxiliary jib.
- ▶ Select reeving of winch2 rope at auxiliary jib.
- ▶ Activate winch synchronization on control panel *X23* if required.

Main boom + reducing piece

Load on boom head section (winch1 and winch2 rope)

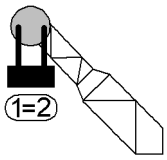

- ▶ Reeve winch1 rope on the boom head section.
- ▶ Reeve winch2 rope on the boom head section.
- ▶ Reeve winch2 rope as often as winch1 rope.
- ▶ Select main boom head.
- ▶ Select reeving of winch1 rope (= reeving of winch2 rope) at main boom head.
- ▶ Activate winch synchronization on control panel *X23* if required.

Main boom + fixed jib

Load on jib head section (winch1 and winch2 rope)

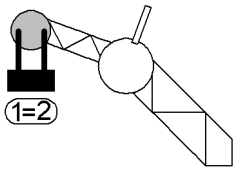

- ▶ Reeve winch1 rope on jib head section.
- ▶ Reeve winch2 rope on jib head section.
- ▶ Reeve winch2 rope as often as winch1 rope.
- ▶ Select reeving of winch1 rope (= reeving of winch2 rope) at jib head.
- ▶ Select load position 1 (jib head).
- ▶ Activate winch synchronization on control panel *X23* if required.

Load on jib head section (winch1 rope) + on main boom head section (winch2 rope)

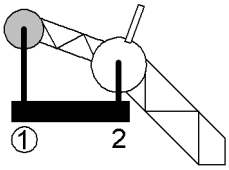

- ▶ Reeve winch1 rope on jib head section.
- ▶ Reeve winch2 rope on the boom head section.
- ▶ Reeve winch2 rope at the boom head section at least as often as winch2 rope on the jib head section.
- ▶ Select load position 1 (jib head).
- ▶ Select reeving of winch1 rope at jib head.
- ▶ Activate winch synchronization on control panel *X23* if required.

Main boom + luffing jib

Load on jib head section (winch1 and winch2 rope)

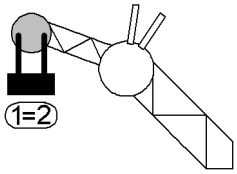

- ▶ Reeve winch1 rope on jib head section.
- ▶ Reeve winch2 rope on jib head section.
- ▶ Reeve winch2 rope as often as winch1 rope.
- ▶ Select reeving of winch1 rope (= reeving of winch2 rope) at jib head.
- ▶ Select load position 1 (jib head).
- ▶ Activate winch synchronization on control panel *X23* if required.

LWN/LR.x/V03.01//Auslieferung/2015-06-03/en

copyright by LIEBHERR

Load on jib head section (winch1 rope) + on main boom head section (winch2 rope)

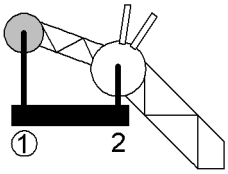

- ▶ Reeve winch1 rope on jib head section.
- ▶ Reeve winch2 rope on the boom head section.
- ▶ Reeve winch2 rope at the boom head section at least as often as winch2 rope on the jib head section.
- ▶ Select load position 1 (jib head).
- ▶ Select reeving of winch1 rope at jib head.
- ▶ Activate winch synchronization on control panel *X23* if required.

Load on jib head section (winch1 rope) + auxiliary jib (winch2 rope)

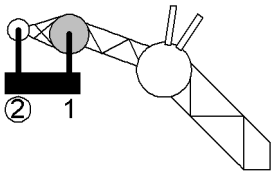

No load chart exists for this configuration. The static moment of the auxiliary jib reduces the valid lifting capacities of the jib.

The auxiliary jib falsifies the load display on the *Operation* screen. The load moment limiter switches off at the maximum permitted load moment.

The auxiliary jib falsifies the radius display on the *Operation* screen. The auxiliary jib falsifies the lifting height display on the *Operation* screen.

- ▶ Reeve winch1 rope on jib head section.
- ▶ Guide the left winch2 rope over the jib head section and reeve onto the auxiliary jib.
- ▶ Reeve winch1 rope at the jib head section at least as often as winch2 rope on the auxiliary jib.
- ▶ Select reeving of winch2 rope at jib head.
- ▶ Select load position 1 (jib head).
- ▶ Activate winch synchronization on control panel *X23* if required.
- ▶ Calculate the reduced lifting capacity before every lifting operation.

For a rough calculation of the reduced lifting capacity at auxiliary jib attached (30 t (66.000 lb)) and empty hook with 900 kg (1,984 lb):

$\mathbf{SWL}_{RED}$ = $\mathbf{SWL}_{NDL}$ - 1400 kg (3,086 lb)

For a rough calculation of the reduced lifting capacity at auxiliary jib attached (15 t (33.000 lb)) and empty hook with 600 kg (1,323 lb):

$\mathbf{SWL}_{RED}$ = $\mathbf{SWL}_{NDL}$ - 1100 kg (2,425 lb)

$\mathbf{SWL}_{RED}$ = reduced lifting capacity for hoisting with the jib head section
$\mathbf{SWL}_{NDL}$ = lifting capacity for hoisting with the jib head section according to the load chart

- ▶ Note the reductions in the valid lifting capacities due to the auxiliary jib attached.

LWN/LR.x/V03.01//Auslieferung/2015-06-03/en

copyright by
LIEBHERR

4.18 Crawlers

4.18.1 Setting the crawler speed

The crawlers can be operated in normal gear or overdrive. In overdrive, the speed can be continuously controlled from 0 to 1.5 km/h (1 mph) using the crawler pedals.

- ▶ Press the *Crawler overdrive* button on control panel *X11*.
  - ▷ Crawler overdrive selected.
  - ▷ The LED in the *Crawler overdrive* button lights up.
- ▶ Press the *Crawler overdrive* button on control panel *X11* again.
  - ▷ Normal crawler gear selected.
  - ▷ The LED in the *Crawler overdrive* button goes off.

4.18.2 Operating the travel gear

DANGER
Ground load-bearing capacity is not known!
Machine toppling over.

- ▶ Only travel on ground where the load-bearing capacity is known.
- ▶ If in doubt, contact Liebherr after sales service.

WARNING
Areas that the operator cannot see when moving!
Severe injuries, damage to machine.

- ▶ Do not drive on areas that the driver cannot see without the aid of a signalman.

DANGER
Incorrect traveling of machine on gradients!
Toppling of machine.

- ▶ Observe restrictions when traveling on gradients .

Note
Stated movement directions apply exclusively if the crawler drives (tumblers) of the crawler side frames are at the rear!
Reverse driving (idler wheel in the rear, tumbler in the front) causes significantly higher wear due to the higher chain tension.

- ▶ Pay attention to the direction of travel.

Driving with a load on the boom is allowed exclusively with reduced lifting capacity. This reduced lifting capacity is shown in the foreword to the load chart.

Hand levers are be screwed onto the foot pedals (inside). The hand levers are operated in the same way as the foot pedals.

Make sure the following prerequisites are met:
- ❑ Suspended counterweight (if available) is lifted.

LWN/LR.x/V03.01//Auslieferung/2015-06-03/en

copyright by LIEBHERR

Moving the machine forward

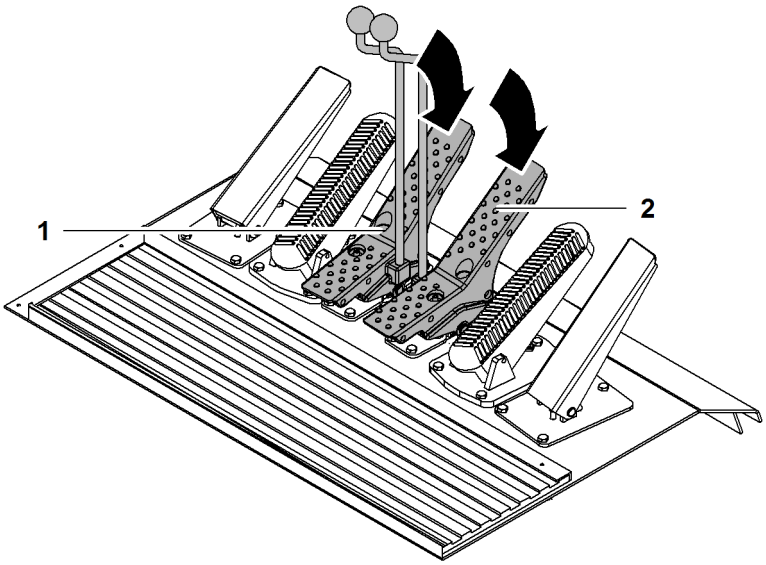

Fig. 2413: Moving the machine forward

1 Foot pedal for *left crawler* **2** Foot pedal for *right crawler*

▶ Press foot pedal *left crawler* **1** and foot pedal *right crawler* **2** forward at the same time.
  ▷ A movement buzzer sounds.
  ▷ Machine moves forward:

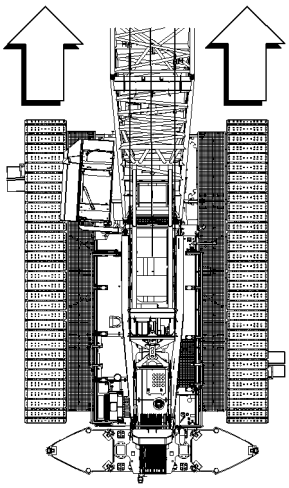

Fig. 2414: Machine moves forward

LWN/LR.x/V03.01//Auslieferung/2015-06-03/en

Moving the machine backwards

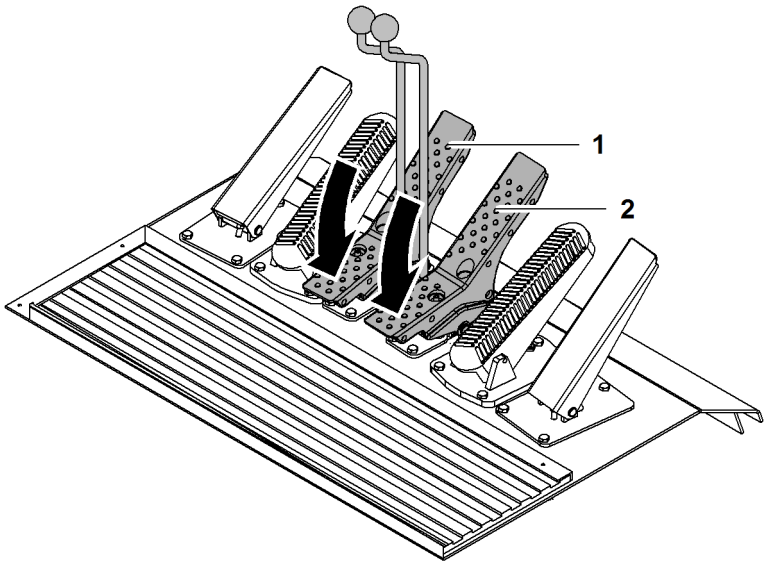

Fig. 2415: Moving the machine backwards

1 Foot pedal for *left crawler* **2** Foot pedal for *right crawler*

▶ Press foot pedal *left crawler* **1** and foot pedal *left crawler* **2** backward at the same time.
  ▷ A movement buzzer sounds.
  ▷ Machine moves backward:

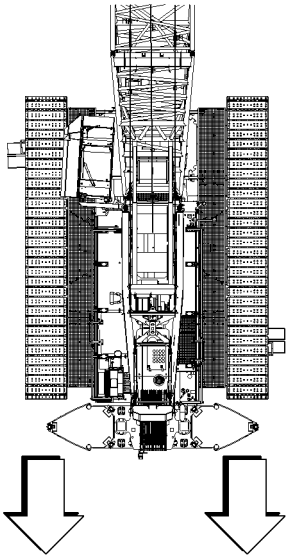

Fig. 2416: Machine moves backward

LWN/LR.x/V03.01//Auslieferung/2015-06-03/en

copyright by
LIEBHERR

Swinging the machine to the left

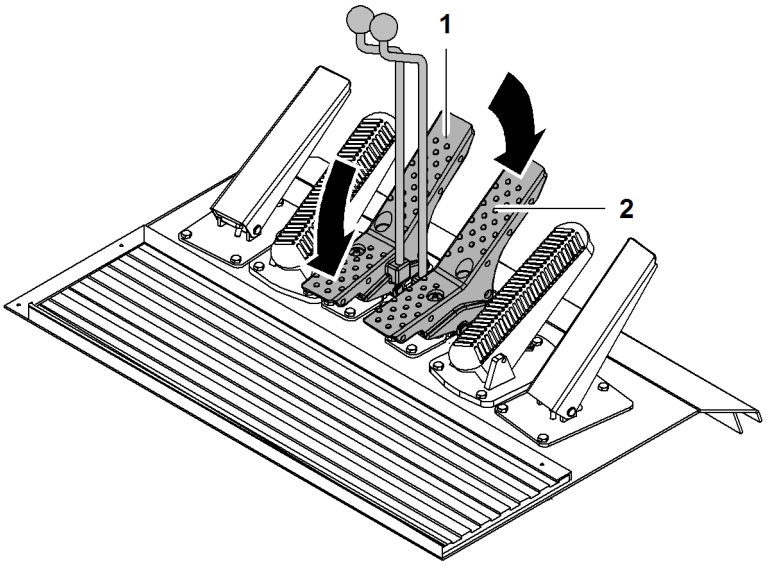

Fig. 2417: Swinging the machine to the left

1 Foot pedal for *left crawler* **2** Foot pedal for *right crawler*

▶ Press foot pedal *left crawler* **1** backward and foot pedal *right crawler* **2** forward at the same time.
  ▷ A movement buzzer sounds.
  ▷ Machine swings to the left:

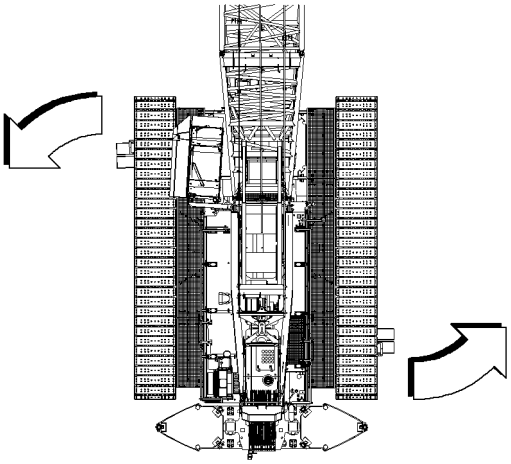

Fig. 2418: Machine swings to the left

LWN/LR.x/V03.01//Auslieferung/2015-06-03/en

Swinging the machine to the right

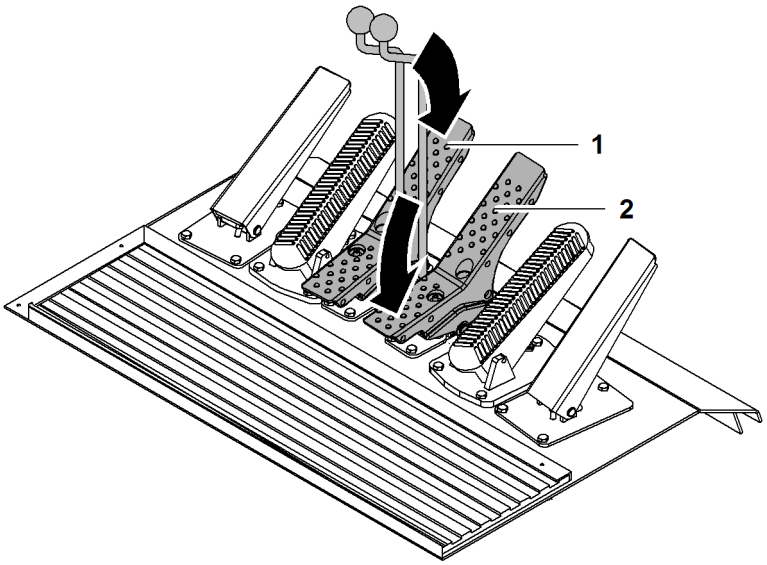

Fig. 2419: Swinging the machine to the right

1 Foot pedal for *left crawler* **2** Foot pedal for *right crawler*

▶ Press foot pedal *left crawler* **2** forward and foot pedal *right crawler* **1** backward at the same time.
▷ A movement buzzer sounds.
▷ Machine swings to the right:

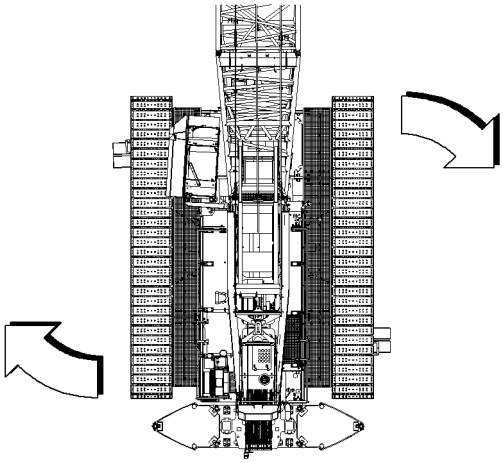

Fig. 2420: Machine swings to the right

4.18.3 Operating the crawler with counterweight carriage*

Three modes are possible when traveling with counterweight carriage:
– Trailer mode
– Follower mode
– Crab mode

Operating the crawler with counterweight carriage is identical to operating the crawler without counterweight carriage (For more information see: 4.18.2 Operating the travel gear, page 909) .

The wheel sets of the counterweight carriage are in free-wheel.

LWN/LR.x/V03.01//Auslieferung/2015-06-03/en

copyright by
LIEBHERR

Swing is locked.

Moving the machine in trailer mode

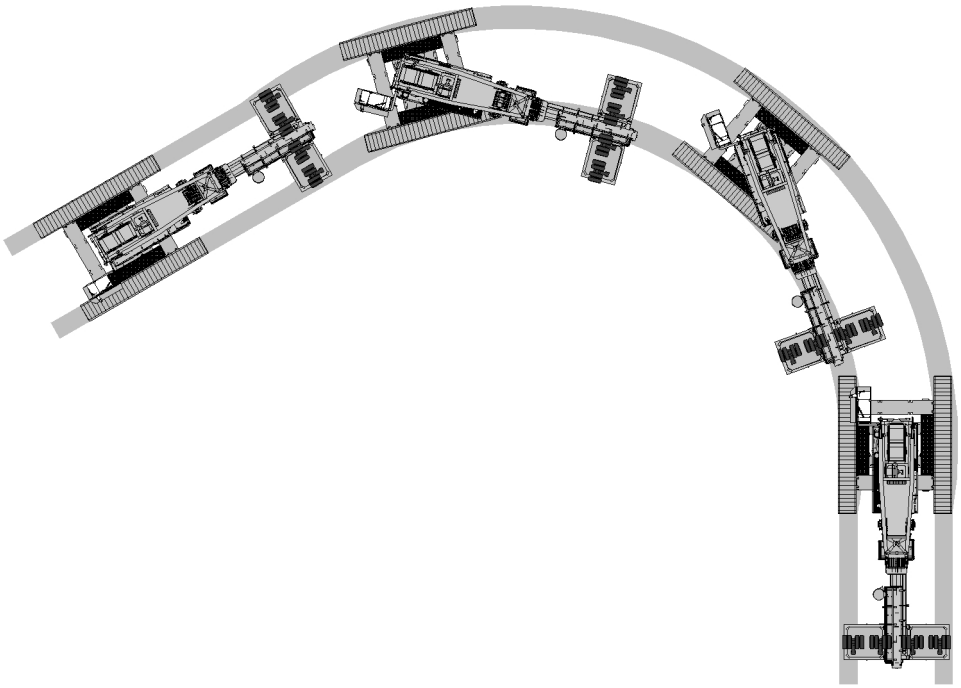

Fig. 2421: Moving the machine in trailer mode

In trailer mode, the counterweight carriage is towed behind the basic machine.

The wheel sets are aligned in the direction of travel. The wheel sets are not adjusted automatically during travel. Manual adjustment in a range of ±10° is possible.

Make sure the following prerequisites are met:
- ❑ There is no load on the boom that would prohibit supporting the counterweight carriage.
- ❑ Support of counterweight carriage is possible due to soil conditions.

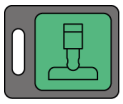

▶ Press the *Counterweight carriage support* button on control panel *X26*.

Note

Liebherr recommends:
▶ Monitor procedure with video equipment and/or a signalman.

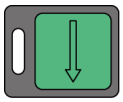

▶ Press and hold the button *Increase radius/support* on control panel *X26* until jacks are fully extended.
  ▷ Counterweight carriage is supported.

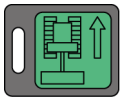

▶ Press the button *Trailer mode* on control panel *X26*.

LWN/LR.x/V03.01//Auslieferung/2015-06-03/en

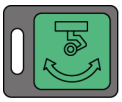

▶ Press the button *Align wheel sets* on control panel *X26*.
▷ Wheel sets are being aligned.

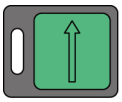

▶ Press and hold the button *Decrease radius/support* on control panel *X26* until jacks are fully retracted.
▷ Counterweight carriage rests on wheel sets.

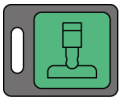

▶ Press the button *Counterweight carriage support* on control panel *X26* again.

▶ Operate crawler.

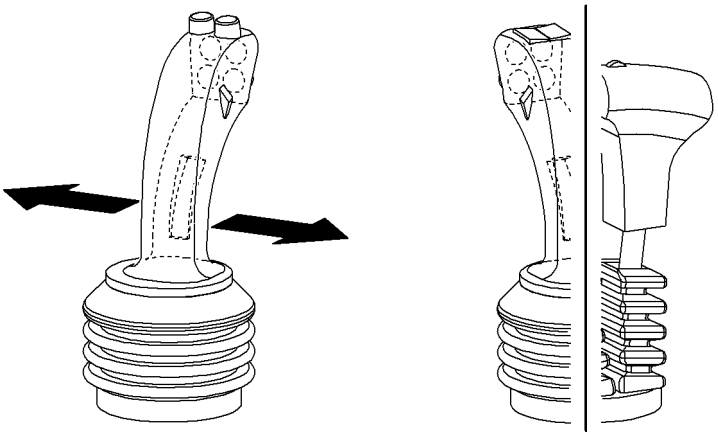

Fig. 2428: Readjusting the wheel sets

▶ If required, steer wheel sets to the right: Move left multi-directional control lever to the left.

▶ If required, steer wheel sets to the left: Move left multi-directional control lever to the right.

LWN/LR.x/V03.01//Auslieferung/2015-06-03/en

copyright by
LIEBHERR

Moving the machine in follower mode

Fig. 2429: Moving the machine in follower mode

In follower mode, the counterweight carriage is towed behind the basic machine.

The wheel sets are aligned in the direction of travel. The wheel sets are readjusted automatically to ensure following in the track of the basic machine.

Follower mode is permitted in an angle range of 330° to 30° and 150° to 210°.

Make sure the following prerequisites are met:
- ❑ There is no load on the boom that would prohibit supporting the counterweight carriage.
- ❑ Support of counterweight carriage is possible due to soil conditions.

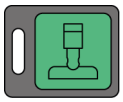

▶ Press the *Counterweight carriage support* button on control panel *X26*.

Note

Liebherr recommends:
▶ Monitor procedure with video equipment and/or a signalman.

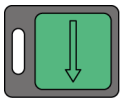

▶ Press and hold the button *Increase radius/support* on control panel *X26* until jacks are fully extended.
▷ Counterweight carriage is supported.

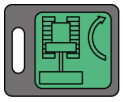

▶ Press the button *Follower mode* on control panel *X26*.

LWN/LR.x/V03.01//Auslieferung/2015-06-03/en

copyright by
LIEBHERR

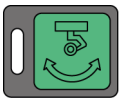

▶ Press the button *Align wheel sets* on control panel *X26*.
▷ Wheel sets are being aligned.

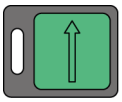

▶ Press and hold the button *Decrease radius/support* on control panel *X26* until jacks are fully retracted.
▷ Counterweight carriage rests on wheel sets.

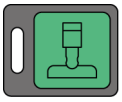

▶ Press the button *Counterweight carriage support* on control panel *X26* again.

▶ Operate crawler.

Moving the machine in crab mode

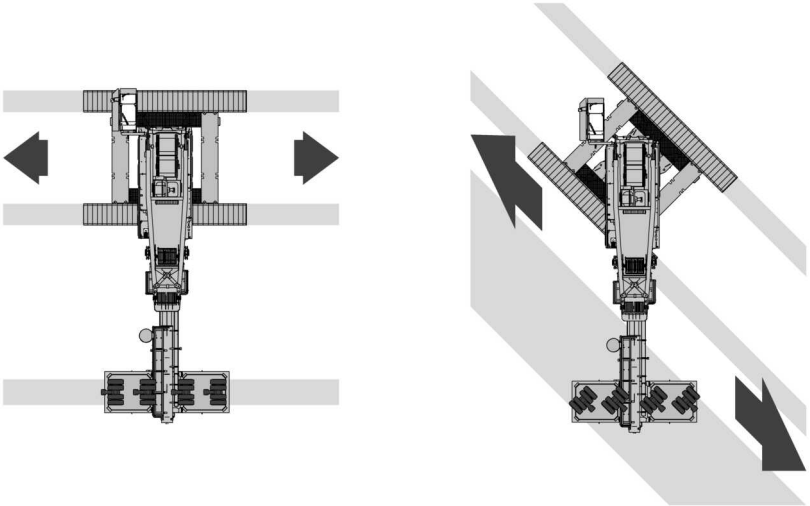

Fig. 2436: Moving the machine in crab mode

In crab mode, the counterweight carriage is aligned parallel to the crawler side frame and pulled along.

The wheel sets align parallel to the undercarriage in the direction of travel. The wheel sets are automatically adjusted and driven during travel.

Crab mode is permitted in an angle range of 60° to 120° and 240° to 300°.

Make sure the following prerequisites are met:
❑ There is no load on the boom that would prohibit supporting the counterweight carriage.
❑ Support of counterweight carriage is possible due to soil conditions.

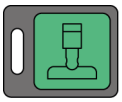

▶ Press the *Counterweight carriage support* button on control panel *X26*.

Note

Liebherr recommends:
▶ Monitor procedure with video equipment and/or a signalman.

LWN/LR.x/V03.01//Auslieferung/2015-06-03/en

copyright by
LIEBHERR

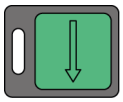

▶ Press and hold the button *Increase radius/support* on control panel *X26* until jacks are fully extended.
▷ Counterweight carriage is supported.

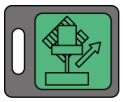

▶ Press the button *Crab mode* on control panel *X26*.

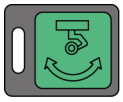

▶ Press the button *Align wheel sets* on control panel *X26*.
▷ Wheel sets are being aligned.

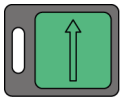

▶ Press and hold the button *Decrease radius/support* on control panel *X26* until jacks are fully retracted.
▷ Counterweight carriage rests on wheel sets.

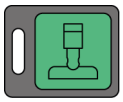

▶ Press the button *Counterweight carriage support* on control panel *X26* again.

▶ Operate crawler.

4.18.4 Locking or unlocking the crawler

The crawlers can be locked to prevent them from being operated accidentally.

▶ Press the *Settings* button on screen.
▷ The *Settings* screen appears.

▶ Press the *Lock crawler* button on screen for more than 1 second.
▷ Crawlers are locked.

▶ Press the *Unlock crawler* button on screen for more than 1 second.
▷ Crawler is unlocked.

LWN/LR.x/V03.01//Auslieferung/2015-06-03/en

copyright by
LIEBHERR

4.19 Swing

WARNING
People or obstacles in the swing range!
Severe injuries, damage to machine.

- ▶ Ensure that there are no people or obstacles in the swing range.
- ▶ Leave the danger area.

4.19.1 Setting the swing speed

The crawler crane has no safety devices to limit the swing speed.

The maximum swing speeds for the speed settings are shown in the technical data for the swing.

In derrick mode, slewing of the uppercarriage is possible at speed level **1** exclusively.

DANGER
Excessive swing speed!
Machine toppling over, structural breakdown.

- ▶ Determine the maximum permitted swing speed for the current load and radius before any swing movement.
- ▶ Check that the preset speed is appropriate before any swing movement.
- ▶ Ensure that the maximum swing speed for the selected speed setting does not exceed the maximum permissible swing speed.

The diagram below shows the maximum permitted swing speed depending on the radius.

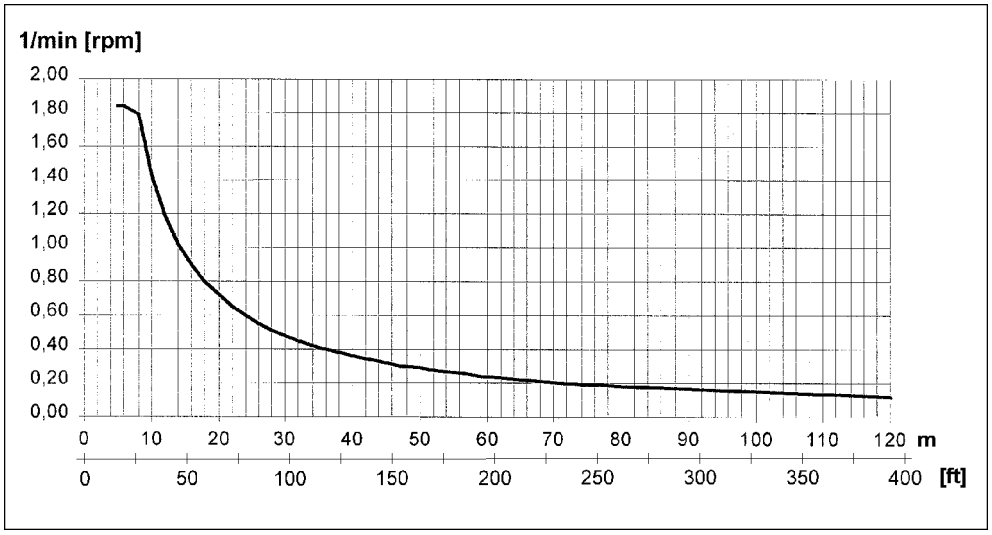

Fig. 2446: Setting the swing speed

LWN/LR.x/V03.01//Auslieferung/2015-06-03/en

copyright by
LIEBHERR

DANGER
Swing speed too fast for an emergency stop!
An emergency stop brings about additional dangers resulting from the inertia of moving masses (e.g. the load swinging).
Machine toppling over, structural breakdown.

▶ Select swing speed so that the admissible diagonal pull is not exceeded in case of an emergency stop.

The lifting capacity must also be reduced in the following circumstances:
– Large boom lengths.
– Loads close to the maximum permitted load.
– In windy conditions; especially if the load to be lifted has a large area exposed to the wind.

The swing speed level is retained when the ignition is switched off.

▶ Press the *Swing speed level* button on control panel *X23*.

▷ Symbol *Swing speed level* appears on screen:

Fig. 2448: Symbol Swing speed level

▶ Press the *Swing speed level* button on control panel *X23* again.
▷ The number (1 to 3) in the symbol *Swing speed level* changes.

4.19.2 Turning the swing free-wheel on or off

If the free swing is switched on, the swing brake remains open.

WARNING
Open swing brake!
Severe injuries, damage to machine.

If the uppercarriage turns further than intended:
▶ Slow/stop the rotary movement by moving the control lever in the opposite direction.

Ensure that the following conditions are fulfilled:
❑ Swing is stationary.
❑ No control lever function is active.

Turning swing free-wheel on/off on control panel X23

▶ Press the *Swing free-wheel* button on control panel *X23*.

▷ Free swing is switched on.
▷ Symbol *Swing free-wheel* appears on screen:

LWN/LR.x/V03.01//Auslieferung/2015-06-03/en

Fig. 2450: Free swing symbol

▶ Press the *Swing free-wheel* button on control panel *X23* again.
▷ Free swing is switched off.
▷ The symbol *Swing free-wheel* disappears on screen.

Switching swing free-wheel on/off using the control lever

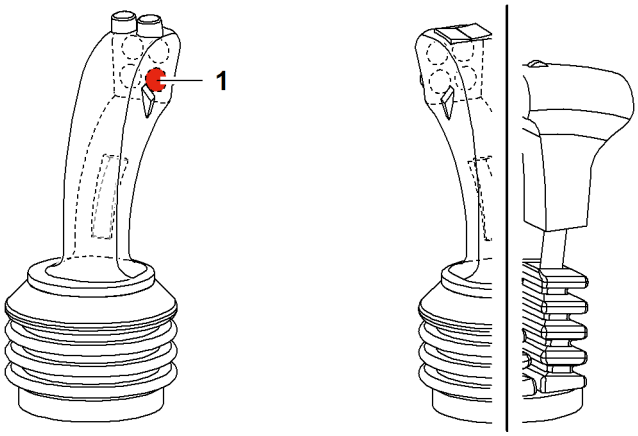

Fig. 2451: Switching swing free-wheel on/off using the multi-directional control lever

1 Button *Swing free-wheel*

Swing free-wheel is active for as long as you hold down the button *Swing free-wheel* **1**.

▶ Press and hold the button *Swing free-wheel* **1** on the left multi-directional control lever.
▷ Free swing is switched on.
▷ Symbol *Swing free-wheel* appears on screen:

Fig. 2452: Free swing symbol

▶ Release the button *Swing free-wheel* **1**.
▷ Free swing is switched off.
▷ The symbol *Swing free-wheel* disappears on screen.

4.19.3 Operating the swing

DANGER
Incorrect use of the swing!
Risk of machine toppling over, structural breakdown.

▶ Accelerate and brake the swing slowly.

LWN/LR.x/V03.01//Auslieferung/2015-06-03/en

copyright by
LIEBHERR

NOTICE
A-frame1 protrudes beyond rear counterweight!
Damage to A-frame1.

▶ Check position of A-frame1 prior to turning uppercarriage.

▶ Consider the values in the following table.

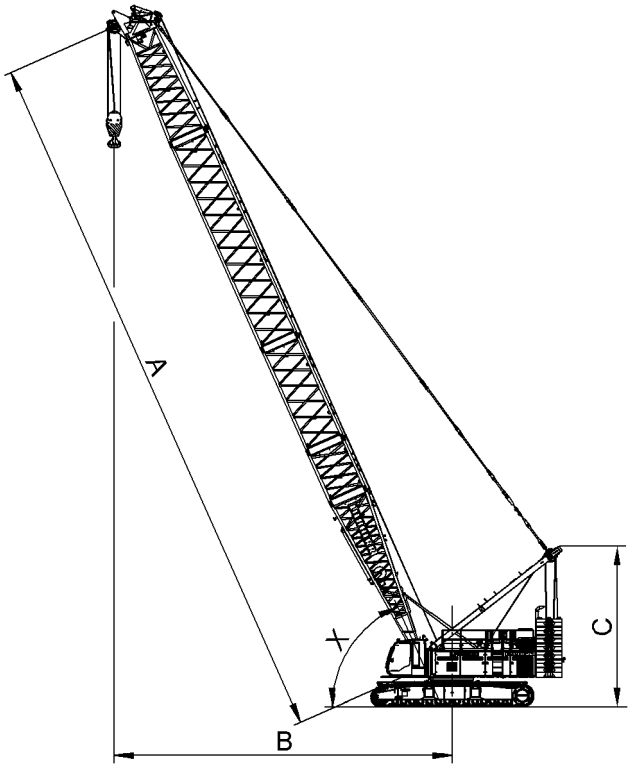

Fig. 2453: Position of A-frame1 in dependence on main boom angle (illustration of principle)

As of the stated main boom angle, A-frame1 protrudes beyond the rear counterweight. This angle changes depending on the main boom length.

Main boom length A	Radius B	Height A-frame1 C	Main boom angle X
LR 1006			
20 m 66 ft	5.8 m 19‘ ft-in	9.3 m 30‘ 6“ ft-in	81.5°
38 m 125 ft	12.4 m 40‘ 8“ ft-in	9.3 m 30‘ 6“ ft-in	75.5°
50 m 164 ft	17.1 m 56‘ 1“ ft-in	9.4 m 30‘ 10“ ft-in	73.5°
74 m 243 ft	25.7 m 84‘ 4“ ft-in	9.4 m 30‘ 10“ ft-in	72°
98 m 322 ft	33.1 m 108‘ 7“ ft-in	9.2 m 30‘ 2“ ft-in	72°
LR 1004			

LWN/LR.x/V03.01//Auslieferung/2015-06-03/en

copyright by
LIEBHERR

Main boom length A	Radius B	Height A-frame1 C	Main boom angle X
20 m 66 ft	9 m 29‘ 6“ ft-in	8.6 m 28‘ 3“ ft-in	71.5°
38 m 125 ft	18.1 m 59‘ 5“ ft-in	8.6 m 28‘ 3“ ft-in	66°
62 m 203 ft	30.2 m 99‘ 1“ ft-in	8.7 m 28‘ 7“ ft-in	63.5°
74 m 243 ft	36.2 m 118‘ 9“ ft-in	8.7 m 28‘ 7“ ft-in	63°
86 m 282 ft	43 m 141‘ 1“ ft-in	8.6 m 28‘ 3“ ft-in	63°
LR 1003			
25.7 m 84 ft	8.3 m 27‘ 3“ ft-in	7.4 m 24‘ 3“ ft-in	77°
40.4 m 133 ft	13.6 m 44‘ 7“ ft-in	7.4 m 24‘ 3“ ft-in	74°
58.1 m 191 ft	19 m 62‘ 4“ ft-in	7.3 m 23‘ 11“ ft-in	73.5°
69.8 m 229 ft	24 m 78‘ 9“ ft-in	7.4 m 24‘ 3“ ft-in	72°
87.5 m 287 ft	29.5 m 96‘ 9“ ft-in	7.3 m 23‘ 11“ ft-in	72°
LR 1002			
20 m 66 ft	2.9 m 9‘ 6“ ft-in	5.5 m 18‘ 1“ ft-in	88°
38 m 125 ft	4.9 m 16‘ 1“ ft-in	5.3 m 17‘ 5“ ft-in	86°
50 m 164 ft	6.2 m 20‘ 4“ ft-in	5.2 m 17‘ 1“ ft-in	85.5°
68 m 223 ft	9.4 m 30‘ 10“ ft-in	5.3 m 17‘ 5“ ft-in	84°
80 m 262 ft	10.6 m 34‘ 9“ ft-in	5.3 m 17‘ 5“ ft-in	84°
LR 1001			
17 m 56 ft	4.4 m 14‘ 5“ ft-in	6.5 m 21‘ 4“ ft-in	82.5°
32 m 105 ft	9.1 m 29‘ 10“ ft-in	6.5 m 21‘ 4“ ft-in	77.5°
41 m 135 ft	12 m 39‘ 4“ ft-in	6.5 m 21‘ 4“ ft-in	76°
56 m 184 ft	16.1 m 52‘ 10“ ft-in	6.5 m 21‘ 4“ ft-in	75.5°

LWN/LR.x/V03.01//Auslieferung/2015-06-03/en

copyright by
LIEBHERR

Main boom length A	Radius B	Height A-frame1 C	Main boom angle X
68 m 223 ft	19.1 m 62‘ 8“ ft-in	6.4 m 21‘ ft-in	75.5°

Tab. 376: Position of A-frame1 in dependence of main boom angle with different main boom lengths

Swinging the uppercarriage to the left

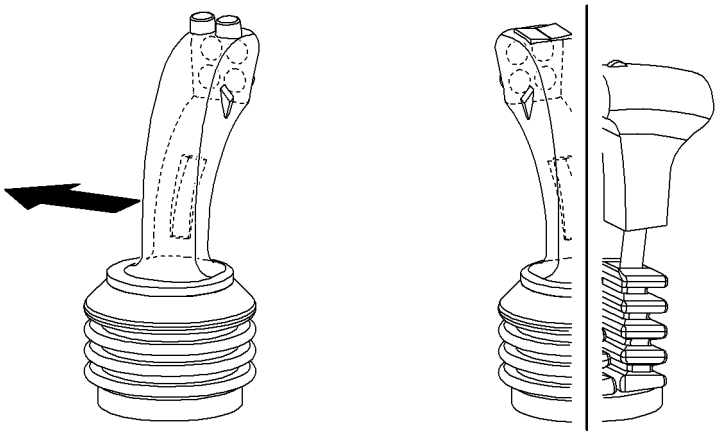

Fig. 2454: Swinging the uppercarriage to the left

▶ Push the left multi-directional joystick to the left.
  ▷ Uppercarriage swings to the left (counter-clockwise).
  ▷ A movement buzzer sounds.

Swinging the uppercarriage to the right

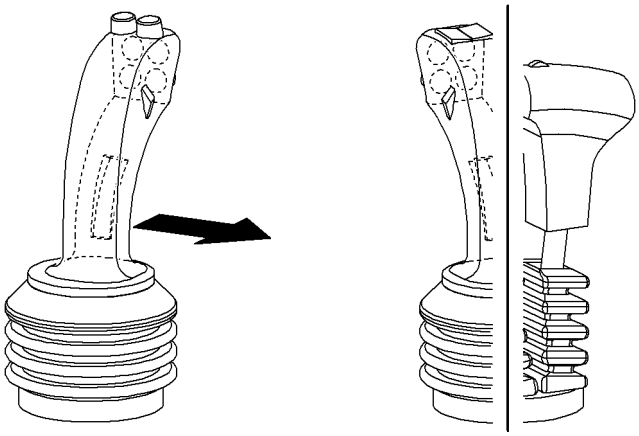

Fig. 2455: Swinging the uppercarriage to the right

▶ Move the left-hand multi-directional control lever to the right.
  ▷ Uppercarriage swings to the right (clockwise).
  ▷ A movement buzzer sounds.

LWN/LR.x/V03.01/Auslieferung/2015-06-03/en

4.19.4 Operating the swing with suspended counterweight*

DANGER
Improper use of swing!
Toppling of machine, structural breakdown.

- ▶ Accelerate and brake the swing slowly.
- ▶ Lift suspended counterweight before turning the uppercarriage.

Swinging the uppercarriage to the left

DANGER
Improper lifting of suspended counterweight!
Toppling of machine.

- ▶ Monitor load moment limiter continuously.
- ▶ Lower boom if necessary.

- ▶ Lift suspended counterweight.

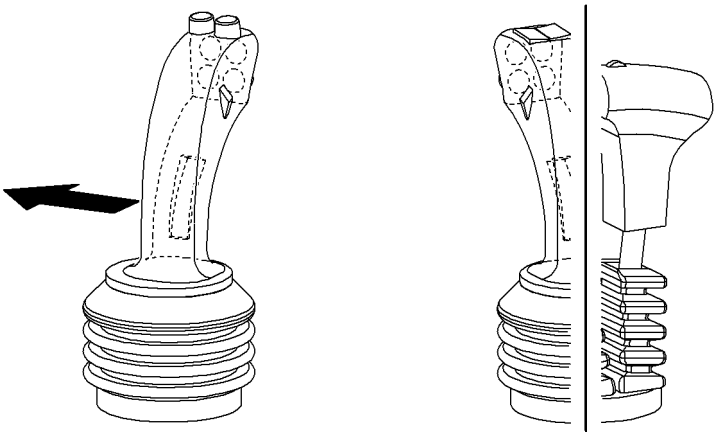

Fig. 2456: Swinging the uppercarriage to the left

- ▶ Push the left multi-directional joystick to the left.
  - ▷ Uppercarriage swings to the left (counter-clockwise).
  - ▷ A movement buzzer sounds.
- ▶ Lay down suspended counterweight.

Swinging the uppercarriage to the right

DANGER
Improper lifting of suspended counterweight!
Toppling of machine.

- ▶ Monitor load moment limiter continuously.
- ▶ Lower boom if necessary.

- ▶ Lift suspended counterweight.

LWN/LR.x/V03.01//Auslieferung/2015-06-03/en

copyright by
LIEBHERR

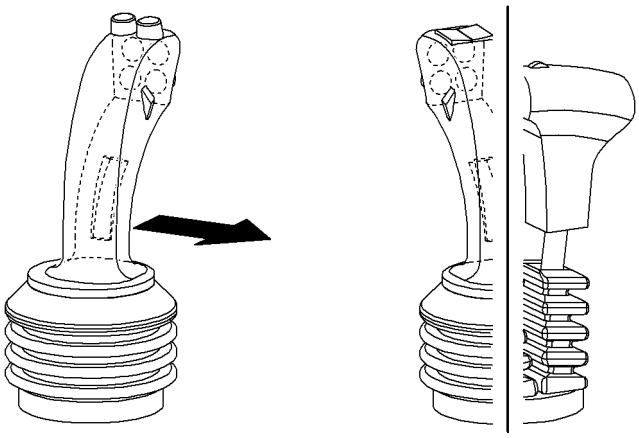

Fig. 2457: Swinging the uppercarriage to the right

- ▶ Move the left-hand multi-directional control lever to the right.
  - ▷ Uppercarriage swings to the right (clockwise).
  - ▷ A movement buzzer sounds.
- ▶ Lay down suspended counterweight.

4.19.5 Operating the swing with counterweight carriage*

Operating the swing with counterweight carriage is identical to operating the swing without counterweight carriage (For more information see: 4.19.3 Operating the swing, page 921) .

The wheel sets of the counterweight carriage a driven.

Crawler is locked.

DANGER
Improper use of swing!
Toppling of machine, structural breakdown.

- ▶ Accelerate and brake the swing slowly.
- ▶ Align wheel sets before turning the uppercarriage.

Make sure the following prerequisites are met:
- ❑ There is no load on the boom that would prohibit supporting the counterweight carriage.
- ❑ Support of counterweight carriage is possible due to soil conditions.

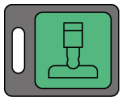

- ▶ Press the *Counterweight carriage support* button on control panel *X26*.

Note

Liebherr recommends:
- ▶ Monitor procedure with video equipment and/or a signalman.

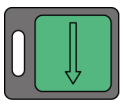

- ▶ Press and hold the button *Increase radius/support* on control panel *X26* until jacks are fully extended.
  - ▷ Counterweight carriage is supported.

LWN/LR.x/V03.01/Auslieferung/2015-06-03/en

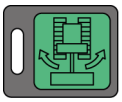

▶ Press the button *Rotate uppercarriage mode* on control panel *X26*.

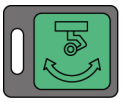

▶ Press the button *Align wheel sets* on control panel *X26*.
▷ Wheel sets are being aligned.

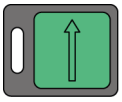

▶ Press and hold the button *Decrease radius/support* on control panel *X26* until jacks are fully retracted.
▷ Counterweight carriage rests on wheel sets.

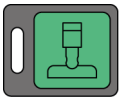

▶ Press the button *Counterweight carriage support* on control panel *X26* again.

▶ Operate swing.

4.19.6 Locking or unlocking the swing

The swing can be locked to prevent accidental operation.

▶ Press the *Settings* button on screen.
▷ The *Settings* screen appears.

▶ Press the *Lock swing* button on screen for more than 1 second.
▷ Swing is locked.

▶ Press the *Unlock swing* button on screen for more than 1 second.
▷ Swing is unlocked.

LWN/LR.x/V03.01//Auslieferung/2015-06-03/en

copyright by
LIEBHERR

4.20 Main boom

The main boom is adjusted using the boom winch.

In derrick mode, the main boom is adjusted using the derrick winch and derrick rope rigging. A-frame1 and derrick boom remain in a fixed position.

The adjustment range of the main boom can also be limited by the radius limiter, limit switch or load moment limiter.

4.20.1 Operating the main boom

Ensure that the following conditions are fulfilled:
- ❑ No limit switch is active and blocking a movement.
- ❑ There are no persons or obstacles in the danger zone.
- ❑ Derrick winch is selected (only in derrick mode).

Lifting the main boom

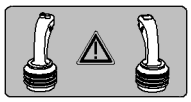

Procedure on a machine with two multi-directional control levers

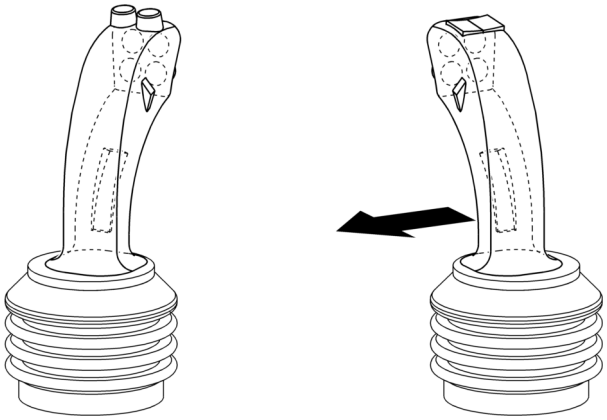

Fig. 2468: Lifting the main boom using the multi-directional control lever

▶ Push the right multi-directional joystick to the left.
  ▷ The main boom rises:

LWN/LR.x/V03.01//Auslieferung/2015-06-03/en

copyright by
LIEBHERR

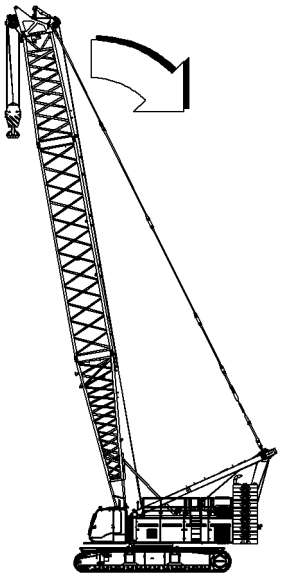

Fig. 2469: The main boom rises

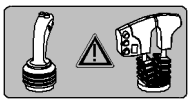

Procedure on a machine with a multi-directional control lever and a double T-lever.

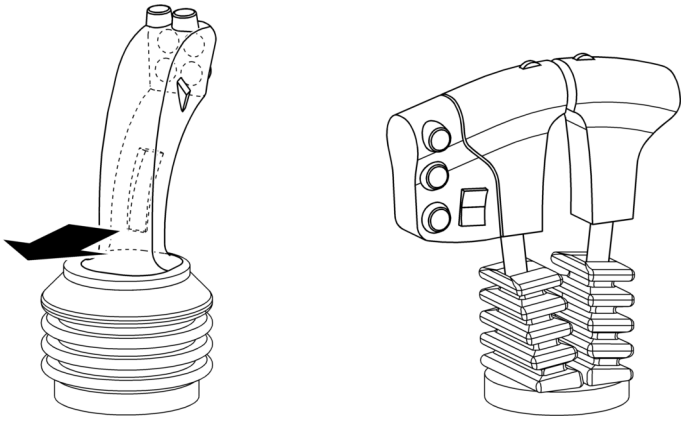

Fig. 2471: Lifting the main boom using the double T-lever

▶ Push the left multi-directional joystick backwards.
  ▷ The main boom rises:

LWN/LR.x/V03.01//Auslieferung/2015-06-03/en

copyright by
LIEBHERR

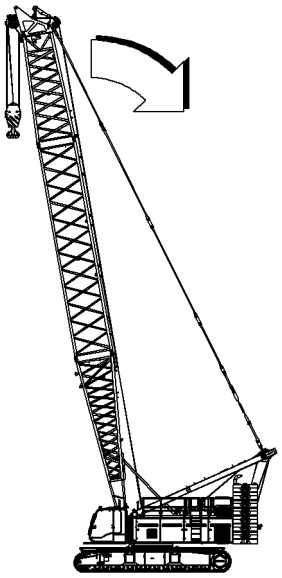

Fig. 2472: The main boom rises

Lowering the main boom

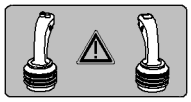

Procedure on a machine with two multi-directional control levers

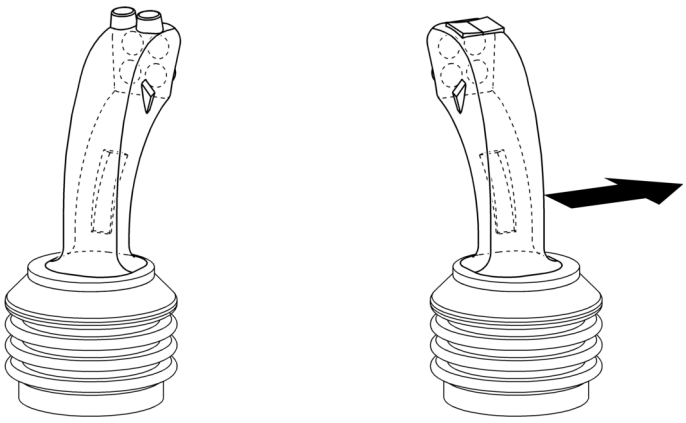

Fig. 2474: Lowering the main boom using the multi-directional control lever

▶ Push the right multi-directional joystick to the right.
  ▷ The main boom lowers:

LWN/LR.x/V03.01//Auslieferung/2015-06-03/en

copyright by
LIEBHERR

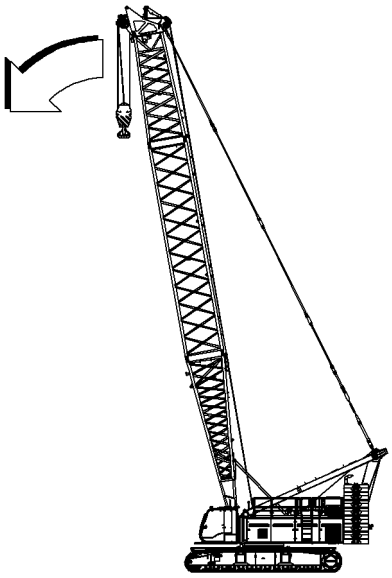

Fig. 2475: The main boom lowers

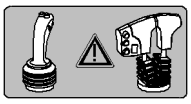

Procedure on a machine with a multi-directional control lever and a double T-lever.

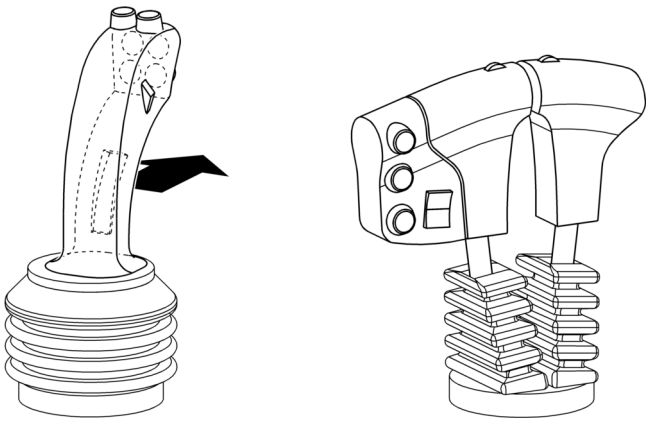

Fig. 2477: Lowering the main boom using the double T-lever

▶ Push the left multi-directional joystick forwards.
  ▷ The main boom lowers:

LWN/LR.x/V03.01//Auslieferung/2015-06-03/en

copyright by
LIEBHERR

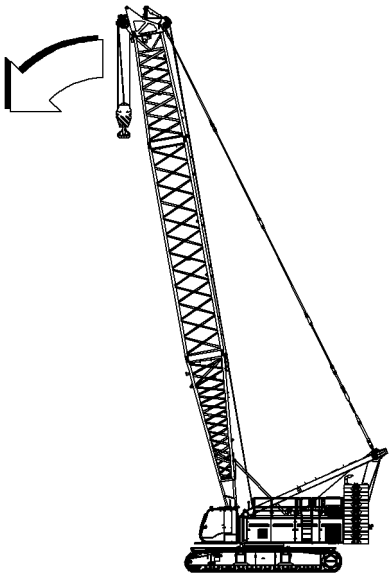

Fig. 2478: The main boom lowers

4.20.2 Locking or unlocking the main boom

The main boom can be locked to prevent it from being operated accidentally.

▶ Press the *Settings* button on screen.
▷ The *Settings* screen appears.

▶ Press the *Lock main boom* button on screen for more than 1 second.
▷ Main boom is locked.

▶ Press the *Unlock main boom* button on screen for more than 1 second.
▷ Main boom is unlocked.

LWN/LR.x/V03.01//Auslieferung/2015-06-03/en

copyright by
LIEBHERR

4.21 Jib

The jib is adjusted using the jib luffing winch.

The adjustment range of the jib can also be limited by the Load Moment Limiter, boom radius limitation or limit switch.

4.21.1 Selecting the jib

The selected boom is identified on the screen by a symbol.

The selection remains stored even after the machine is restarted.

Selecting jib on control lever

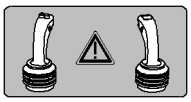

Procedure on a machine with two multi-directional control levers

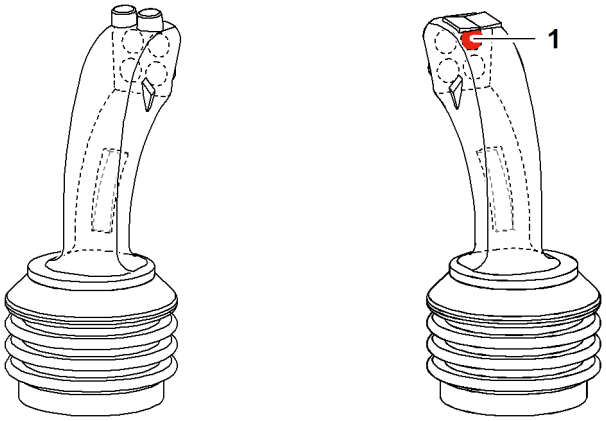

Fig. 2483: Selecting the jib

1 Button *Jib luffing winch*

▶ Press the button *jib luffing winch* **1** on the right multi-directional control lever.
  ▷ Jib luffing winch is selected.
  ▷ Symbol *Jib speed level adjustment* is displayed on the monitor:

Fig. 2484: Symbol Jib speed level adjustment

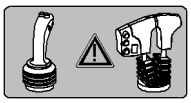

Procedure on a machine with a multi-directional control lever and a double T-lever.

LWN/LR.x/V03.01//Auslieferung/2015-06-03/en

copyright by
LIEBHERR

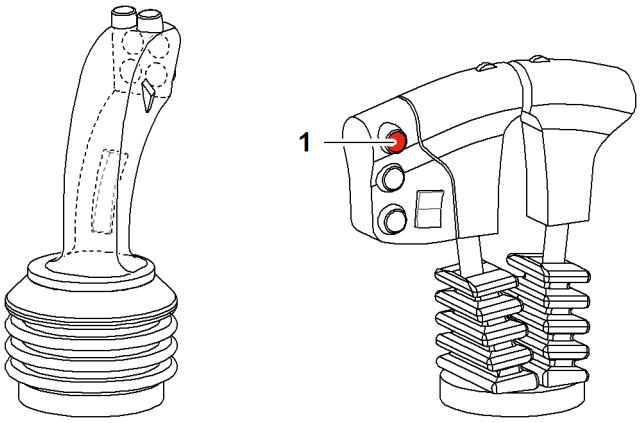

Fig. 2486: Selecting the jib

1 Button *Jib luffing winch*

▶ Press the button *jib luffing winch* **1** on the right double T-lever.
▷ Jib luffing winch is selected.
▷ Symbol *Jib speed level adjustment* is displayed on the monitor:

Fig. 2487: Symbol Jib speed level adjustment

Selecting the jib on control panel *X23*

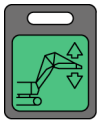

▶ Press the button *Jib luffing winch* on control panel *X23*.

▷ Jib luffing winch is selected.
▷ Symbol *Jib speed level adjustment* is displayed on the monitor:

Fig. 2489: Symbol Jib speed level adjustment

4.21.2 Operating the jib

Ensure that the following conditions are fulfilled:
❑ No limit switch is active and blocking a movement.
❑ There are no persons or obstacles in the danger zone.

Lift jib

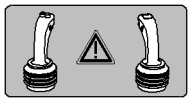

Procedure on a machine with two multi-directional control levers

Simultaneous adjustment of the main boom and the jib is not possible in crane mode.

LWN/LR.x/V03.01//Auslieferung/2015-06-03/en

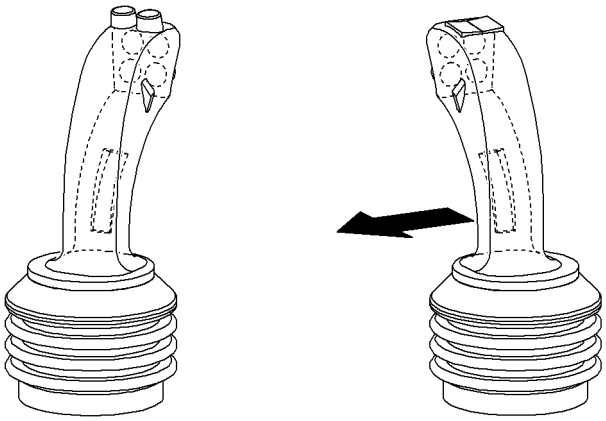

Fig. 2491: Lifting the jib

▶ Push the right multi-directional joystick to the left.
▷ The jib rises:

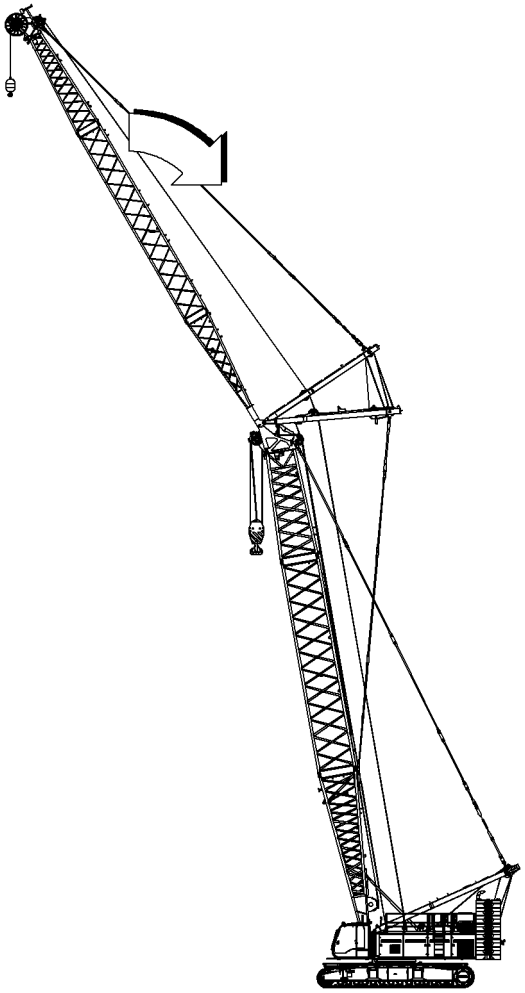

Fig. 2492: The jib rises

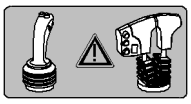

Procedure on a machine with a multi-directional control lever and a double T-lever.

Simultaneous adjustment of the jib and winch2 is not possible.

LWN/LR.x/V03.01//Auslieferung/2015-06-03/en

copyright by
LIEBHERR

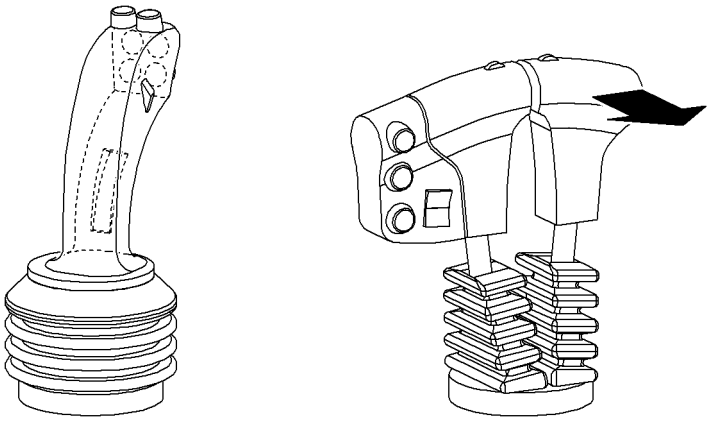

Fig. 2494: Lifting the jib

▶ Push the outer T-lever backwards.
▷ The jib rises:

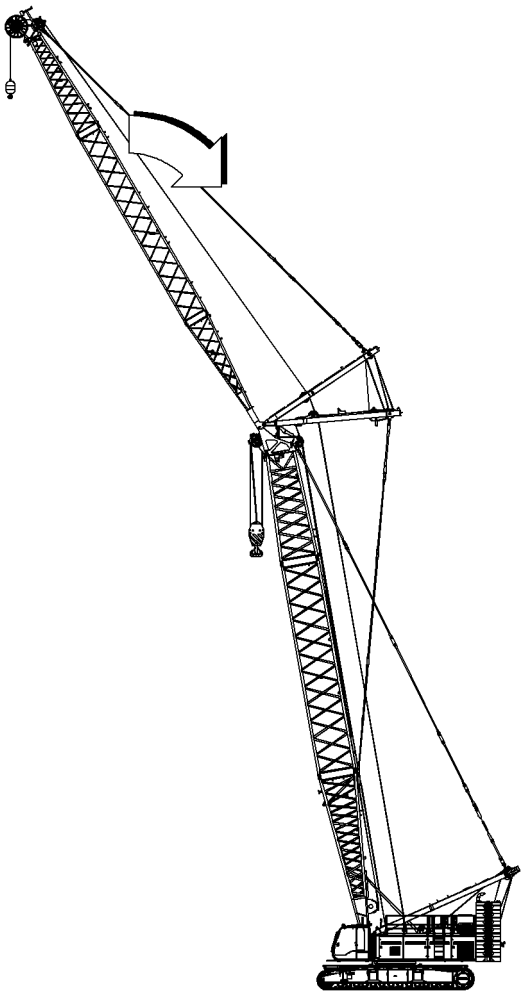

Fig. 2495: The jib rises

Lower jib

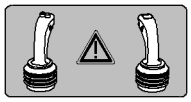

Procedure on a machine with two multi-directional control levers

Simultaneous adjustment of the main boom and the jib is not possible in crane mode.

LWN/LR.x/V03.01//Auslieferung/2015-06-03/en

copyright by
LIEBHERR

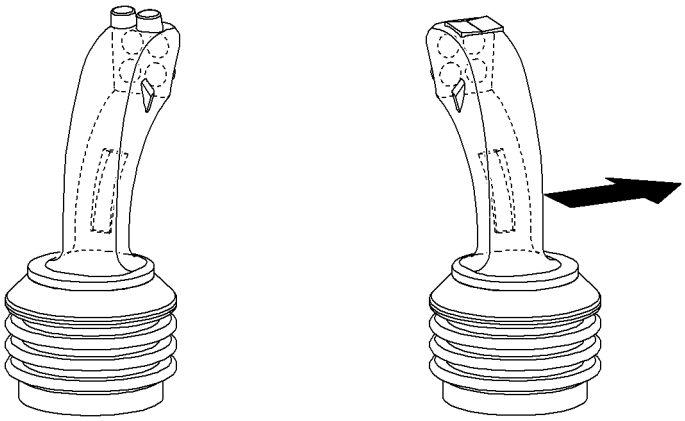

Fig. 2497: Lowering the jib

▶ Push the right multi-directional joystick to the right.
▷ The jib lowers:

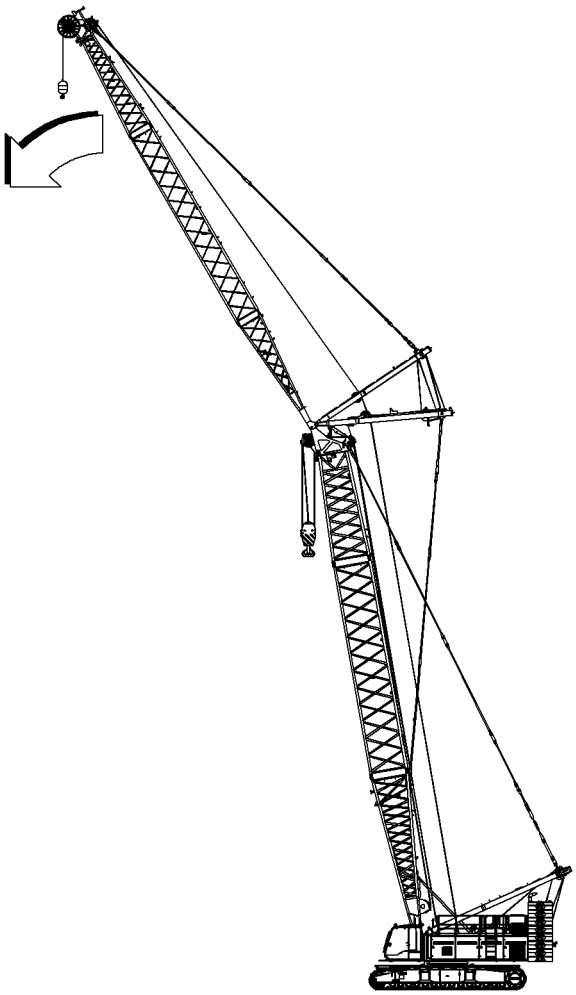

Fig. 2498: The jib lowers

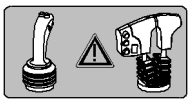

Procedure on a machine with a multi-directional control lever and a double T-lever.

Simultaneous adjustment of the jib and winch2 is not possible.

LWN/LR.x/V03.01//Auslieferung/2015-06-03/en

copyright by
LIEBHERR

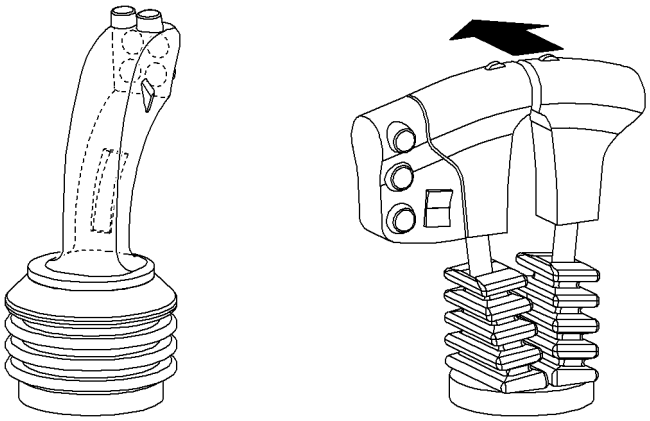

Fig. 2500: Lowering the jib

▶ Push the outer T-lever forwards.
▷ The jib lowers:

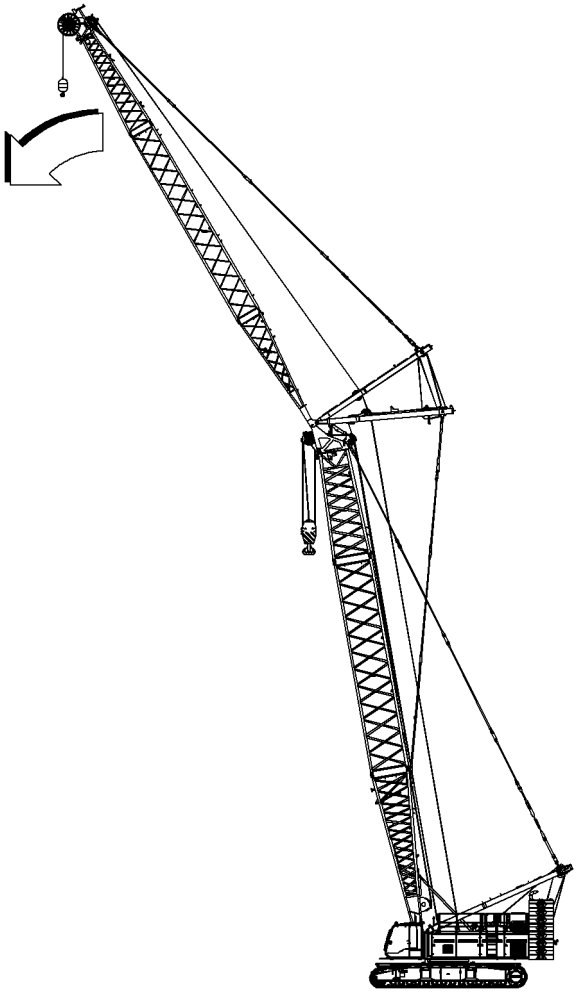

Fig. 2501: The jib lowers

LWN/LR.x/V03.01//Auslieferung/2015-06-03/en

4.22 Winch 1/Winch 2

WARNING
Pulling out of the ropes!

- ▶ Do not turn the winches unless a rope is reeved.
- ▶ Ensure that the rope is tight and evenly positioned on the winch.
- ▶ Have Liebherr after sales service set the 3 rope windings limit switch.

The adjustment range is defined by the set-up, is load-dependent, and is monitored by the LML (load moment limiter). The hoist limit switch and 3 rope windings limit switch restrict the adjustment range. The 3 rope windings limit switch is a safety device that prevents the rope from being pulled out of the rope fixing point on the winch.

4.22.1 Operating winch 1

Lifting the load on winch1

Procedure on a machine with two multi-directional control levers

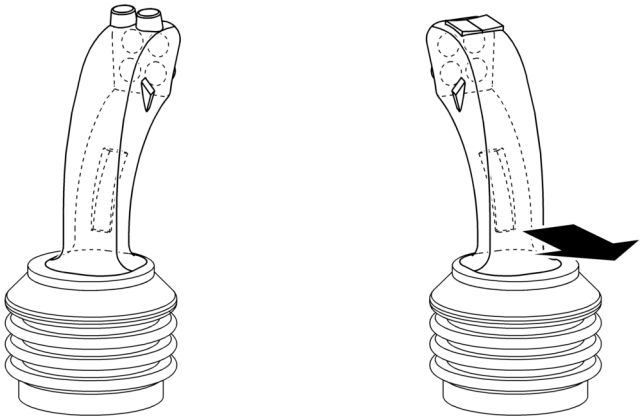

Fig. 2503: Lifting the load on winch1 with the multi-directional control lever

- ▶ Push the right multi-directional joystick backwards.
  - ▷ Load on winch1 is lifted:

LWN/LR.x/V03.01//Auslieferung/2015-06-03/en

copyright by
LIEBHERR

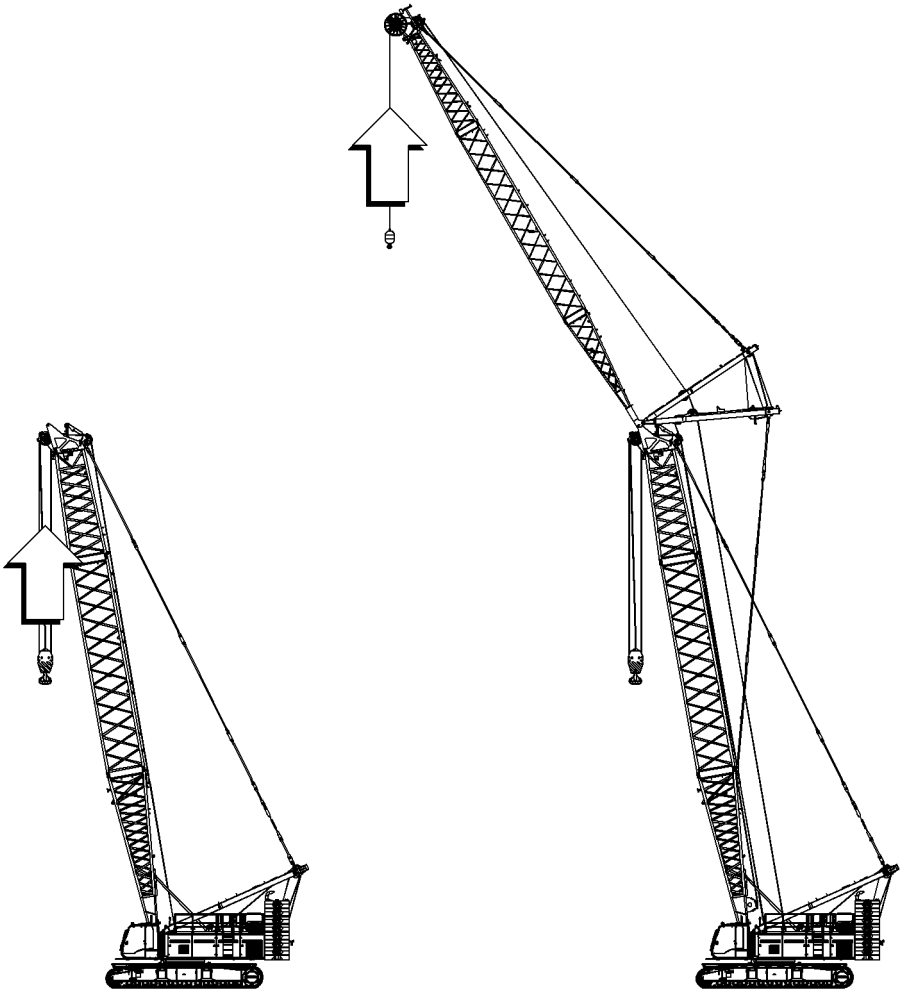

Fig. 2504: Load on winch1 is lifted

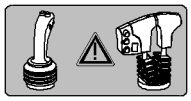

Procedure on a machine with a multi-directional control lever and a double T-lever.

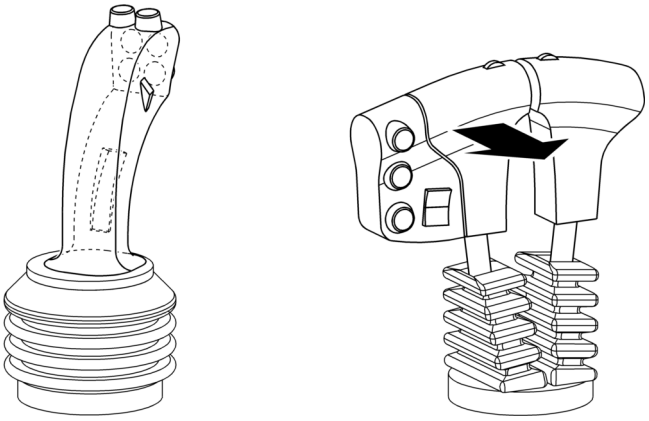

Fig. 2506: Lifting the load on winch1 with the double T-lever

▶ Push the inner T-bar control lever backwards.
▷ Load on winch1 is lifted:

LWN/LR.x/V03.01//Auslieferung/2015-06-03/en

copyright by
LIEBHERR

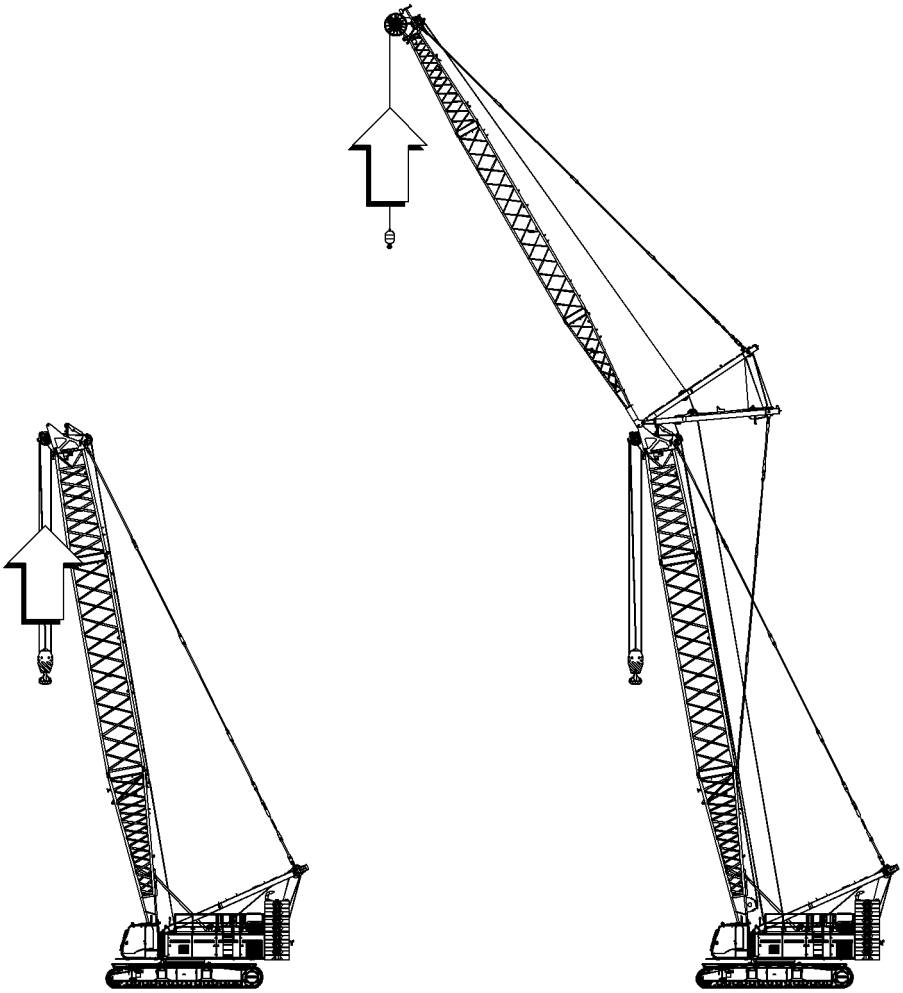

Fig. 2507: Load on winch1 is lifted

Lowering the load on winch1

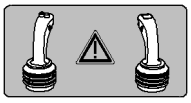

Procedure on a machine with two multi-directional control levers

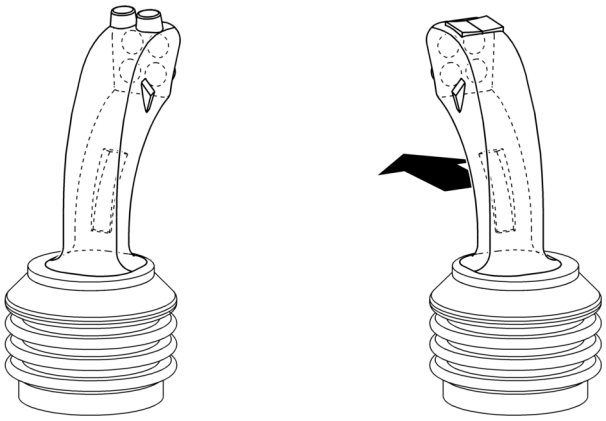

Fig. 2509: Lowering the load on winch1 with the multi-directional control lever

▶ Push the right multi-directional control lever forwards.

LWN/LR.x/V03.01//Auslieferung/2015-06-03/en

copyright by
LIEBHERR

▷ Load on winch1 is lowered:

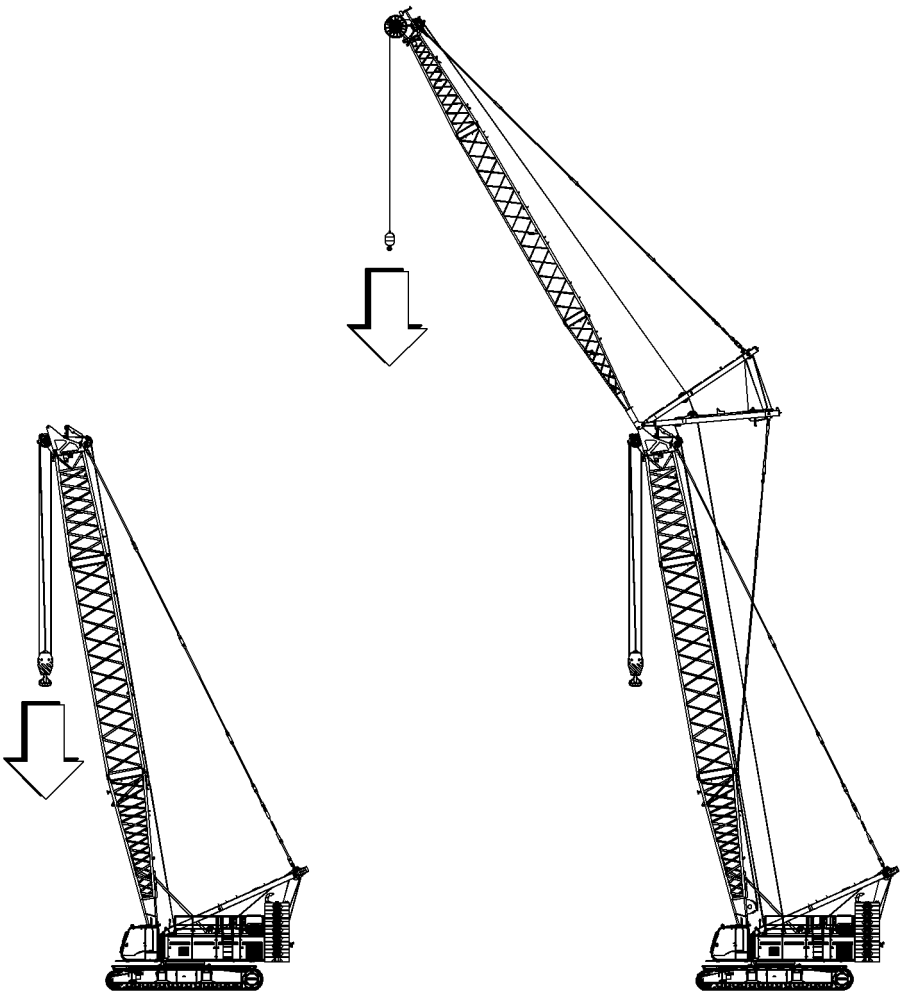

Fig. 2510: Load on winch1 is lowered

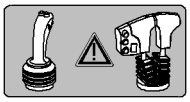

Procedure on a machine with a multi-directional control lever and a double T-lever.

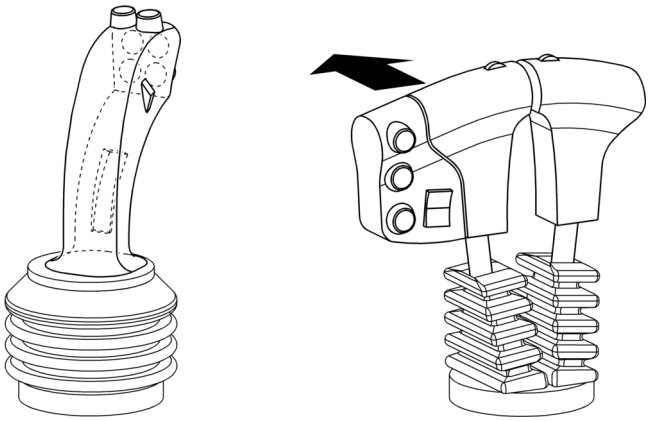

Fig. 2512: Lowering the load on winch1 with the double T-lever

▶ Push the inner T-bar control lever forwards.
▷ Load on winch1 is lowered:

LWN/LR.x/V03.01//Auslieferung/2015-06-03/en

copyright by
LIEBHERR

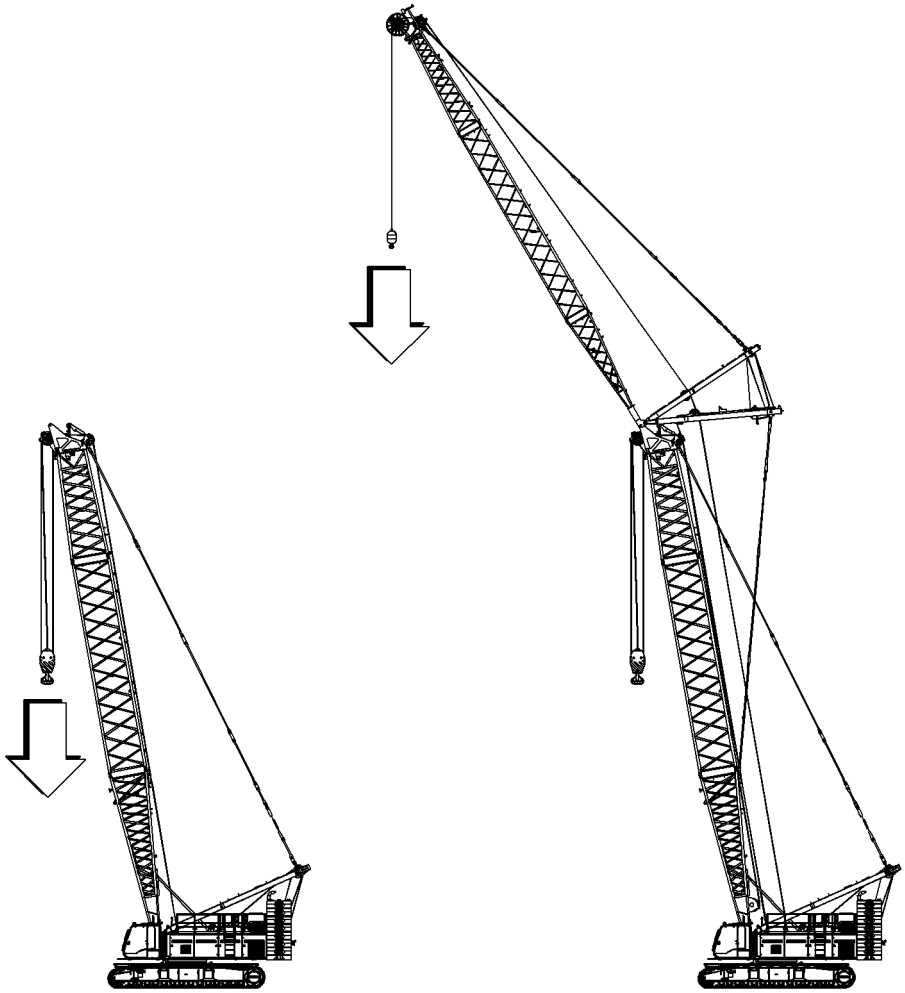

Fig. 2513: Load on winch1 is lowered

4.22.2 Operating winch 2

Lifting the load on winch2

Procedure on a machine with two multi-directional control levers

LWN/LR.x/V03.01//Auslieferung/2015-06-03/en

copyright by
LIEBHERR

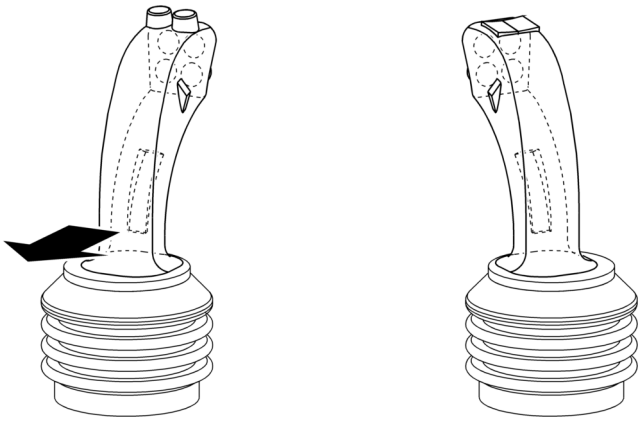

Fig. 2515: Lifting the load on winch2 with the multi-directional control lever

▶ Push the left multi-directional joystick backwards.
▷ Load on winch2 is lifted:

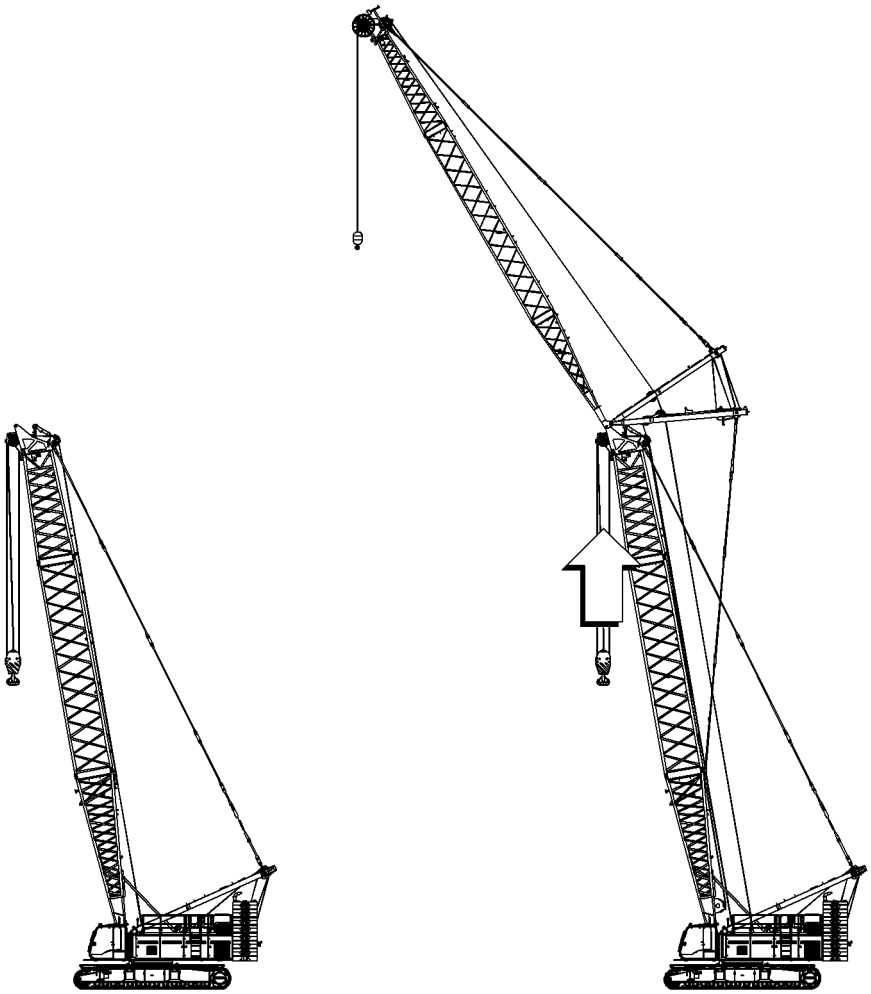

Fig. 2516: Load on winch2 is lifted

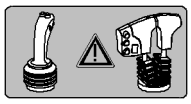

Procedure on a machine with a multi-directional control lever and a double T-lever.

LWN/LR.x/V03.01/Auslieferung/2015-06-03/en

copyright by
LIEBHERR

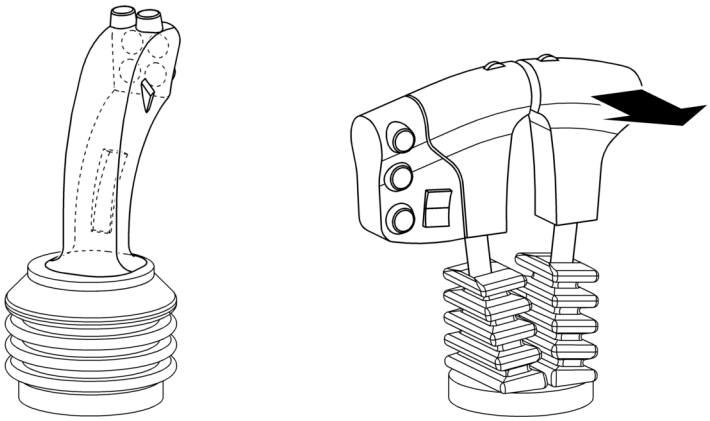

Fig. 2518: Lifting the load on winch2 with the double T-lever

▶ Push the outer T-lever backwards.
  ▷ Load on winch2 is lifted:

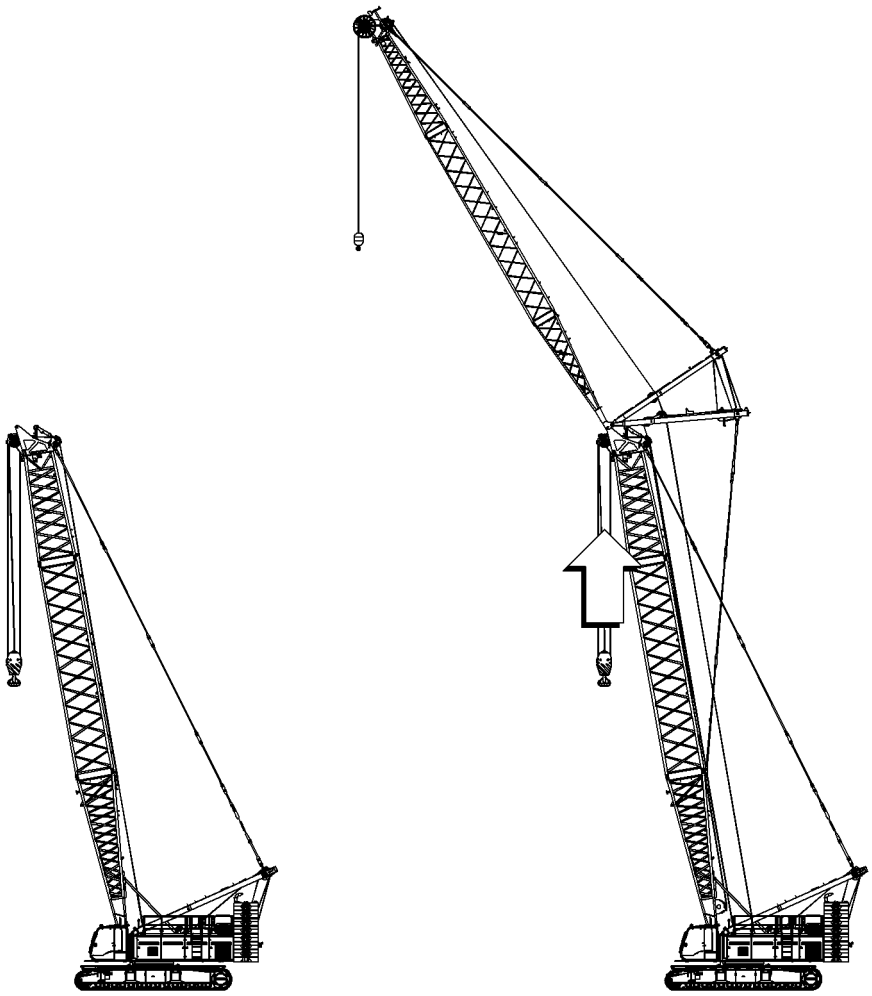

Fig. 2519: Load on winch2 is lifted

Lowering the load on winch2

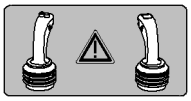

Procedure on a machine with two multi-directional control levers

LWN/LR.x/V03.01//Auslieferung/2015-06-03/en

copyright by
LIEBHERR

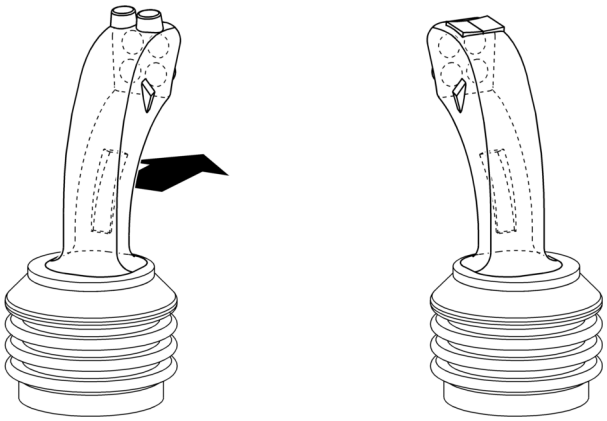

Fig. 2521: Lowering the load on winch2 with the multi-directional control lever

▶ Push the left multi-directional control lever forwards.
▷ Load on winch2 is lowered:

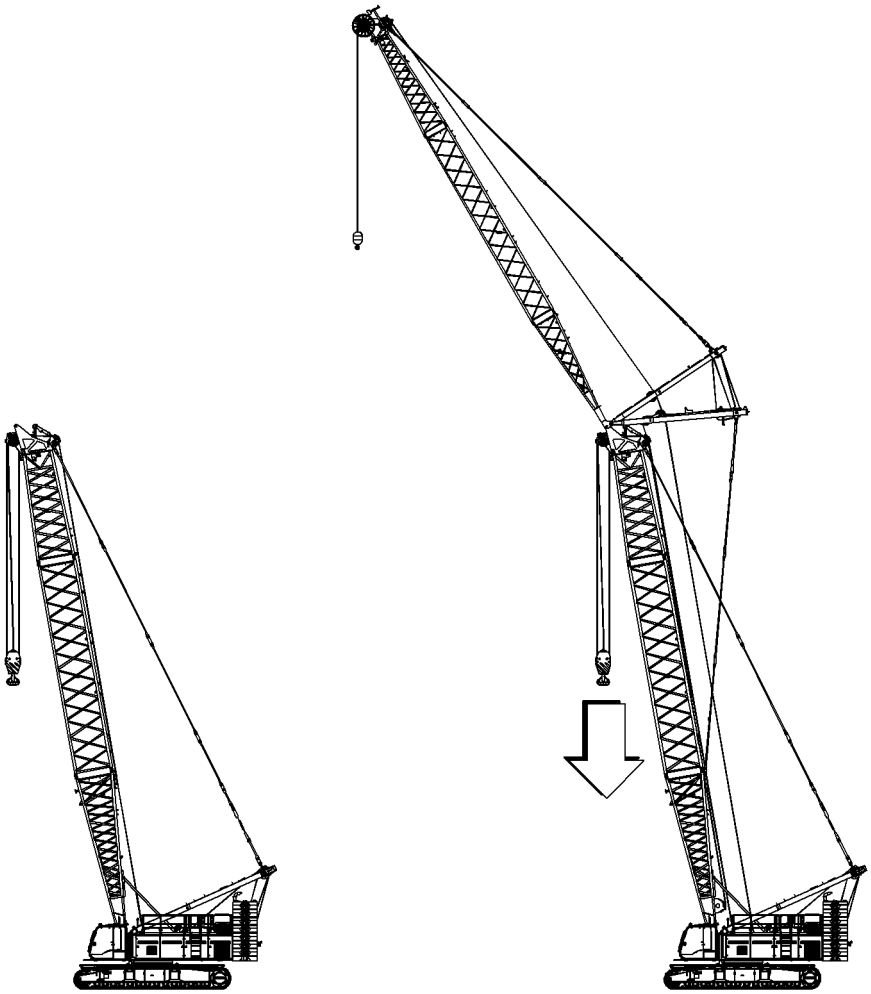

Fig. 2522: Load on winch2 is lowered

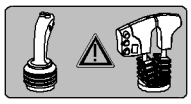

Procedure on a machine with a multi-directional control lever and a double T-lever.

LWN/LR.x/V03.01/Auslieferung/2015-06-03/en

copyright by
LIEBHERR

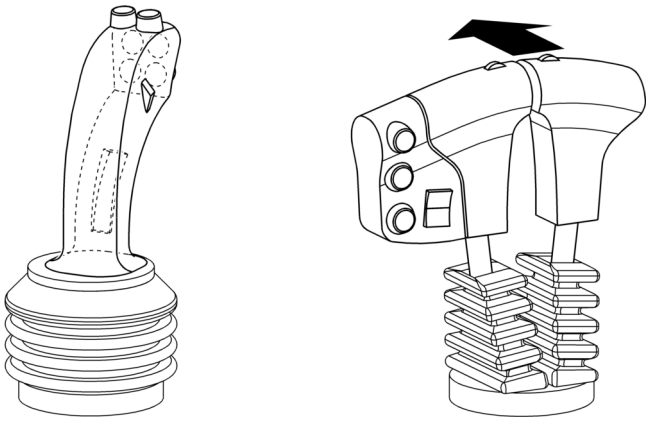

Fig. 2524: Lowering the load on winch2 with the double T-lever

▶ Push the outer T-lever forwards.
  ▷ Load on winch2 is lowered:

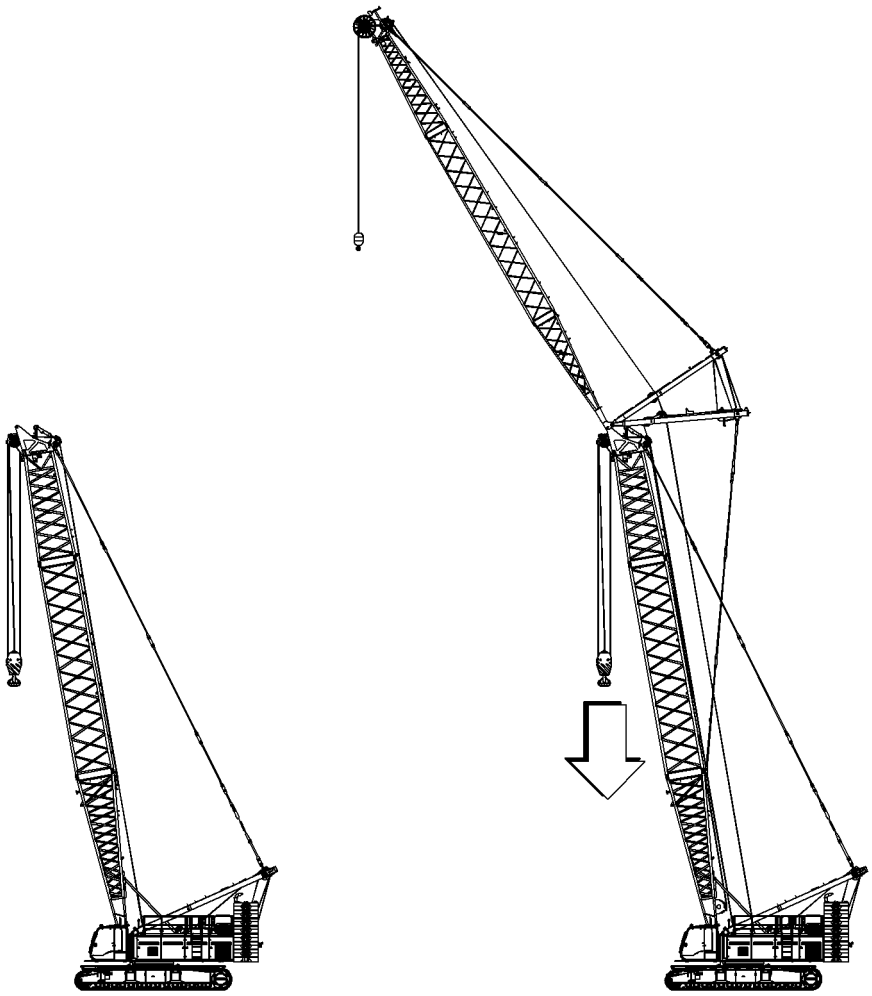

Fig. 2525: Load on winch2 is lowered

4.22.3 Locking or unlocking winch1/winch2

To prevent accidental operation of the winches, winch1 or winch2 can be locked.

LWN/LR.x/V03.01//Auslieferung/2015-06-03/en

copyright by
LIEBHERR

▶ Press the *Settings* button on screen.
▷ The *Settings* screen appears.

▶ Press the *Lock winch1* button on screen for more than 1 second.
▷ Winch1 is locked.

▶ Press the *Lock winch2* button on screen for more than 1 second.
▷ Winch2 is locked.

▶ Press the *Unlock winch1* button on screen for more than 1 second.
▷ Winch1 is unlocked.

▶ Press the *Unlock winch2* button on screen for more than 1 second.
▷ Winch2 is unlocked.

LWN/LR.x/V03.01//Auslieferung/2015-06-03/en

copyright by
LIEBHERR

4.23 Counterweight carriage* radius adjustment

WARNING
Persons or obstacles in the adjustment range!
Severe injuries, damage to machine.

▶ Ensure that there are no persons or obstacles in the adjustment range.

▶ Leave the danger area.

Refer to the valid load chart for the admissible radius values of the counterweight carriage.

The radius of the counterweight carriage is considered in the load calculation.

4.23.1 Activating the radius adjustment of the counterweight carriage

The wheel sets of the wheeled counterweight carriagee free-wheel.

Crawler and swing are locked.

Ensure that the following conditions are fulfilled:
❑ No load on the boom support that would prevent the wheeled counterweight carriage being jacked up.
❑ The ground conditions are such that the wheeled counterweight carriage can be jacked up.

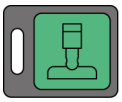

▶ Press the *Counterweight carriage support* button on control panel *X26*.

Note

Liebherr recommends:
▶ This procedure must be monitored by video and/or by the signalman.

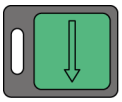

▶ Press and hold the button *Increase radius/support* on control panel *X26* until jacks are fully extended.
▷ Counterweight carriage is supported.

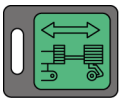

▶ Press the button *Counterweight carriage radius adjustment* on control panel *X26*.

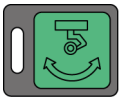

▶ Press the button *Align wheel sets* on control panel *X26*.
▷ Wheel sets are being aligned.

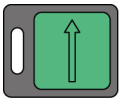

▶ Press and hold the button *Decrease radius/support* on control panel *X26* until jacks are fully retracted.
▷ Counterweight carriage rests on wheel sets.

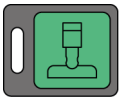

▶ Press the button *Counterweight carriage support* on control panel *X26* again.

LWN/LR.x/V03.01//Auslieferung/2015-06-03/en

copyright by
LIEBHERR

4.23.2 Increasing the radius of the counterweight carriage

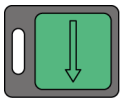

▶ Press and hold the button *Increase radius/support* on control panel *X26*.

▷ Radius of counterweight carriage increases:

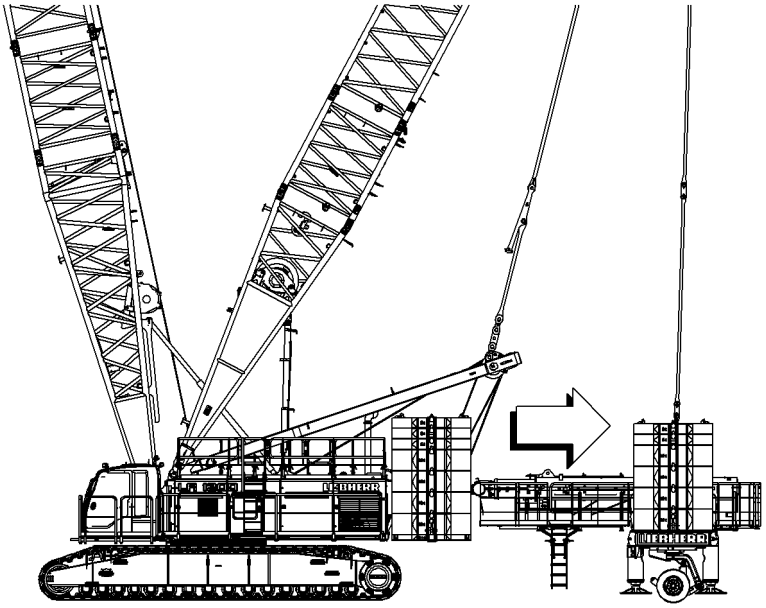

Fig. 2538: Radius of counterweight carriage increases

4.23.3 Decreasing the radius of the counterweight carriage

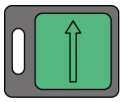

▶ Press and hold the button *Decrease radius/support* on control panel *X26*.

▷ Radius of counterweight carriage decreases:

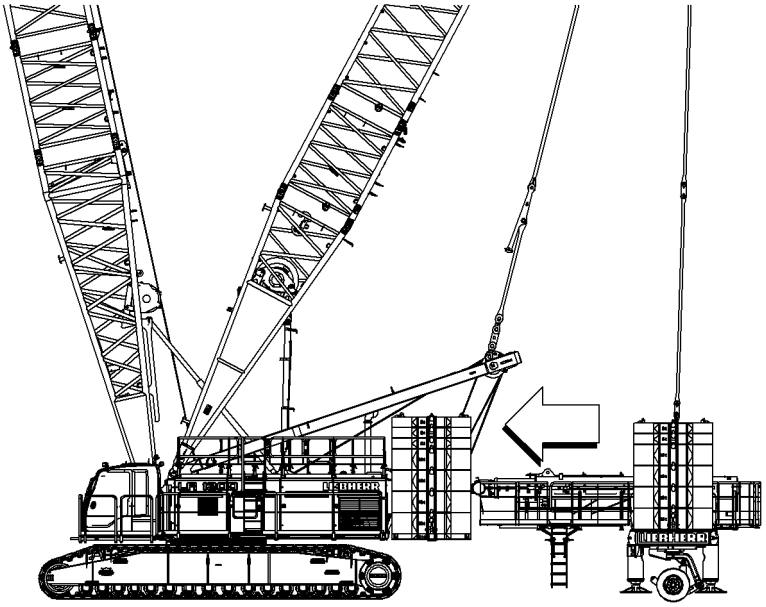

Fig. 2540: Radius of counterweight carriage decreases

LWN/LR.x/V03.01//Auslieferung/2015-06-03/en

4.23.4 Deactivating the radius adjustment of the counterweight carriage

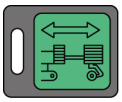

▶ Press the button *Counterweight carriage radius adjustment* on control panel *X26* again.

LWN/LR.x/V03.01//Auslieferung/2015-06-03/en

copyright by
LIEBHERR

4.24 Derrick hoist cylinder*

The suspended counterweight or counterweight carriage can be lifted/lowered using the derrick hoist cylinder.

4.24.1 Selecting the derrick hoist cylinder

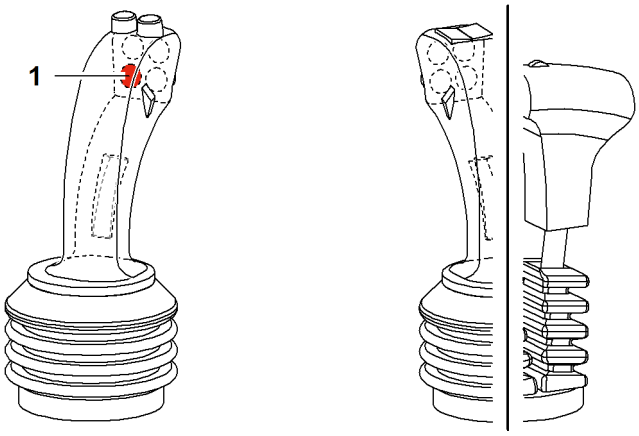

Fig. 2542: Selecting the derrick hoist cylinder

1 Button *Derrick hoist cylinder*

▶ Press the button *derrick hoist cylinder* **1** on the left multi-directional control lever.
  ▷ Derrick hoist cylinder has been selected.
  ▷ The symbol *derrick hoist cylinder* is displayed on the monitor:

Fig. 2543: Symbol derrick hoist cylinder

LWN/LR.x/V03.01//Auslieferung/2015-06-03/en

copyright by
LIEBHERR

4.24.2 Operating the derrick hoist cylinder

Extending the derrick hoist cylinder

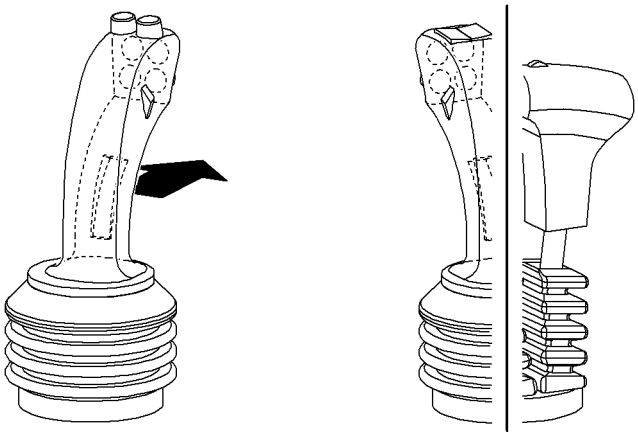

Fig. 2544: Extending the derrick hoist cylinder

▶ Push the left multi-directional joystick forwards.
  ▷ Derrick lifting cylinder extends.

Retracting the derrick hoist cylinder

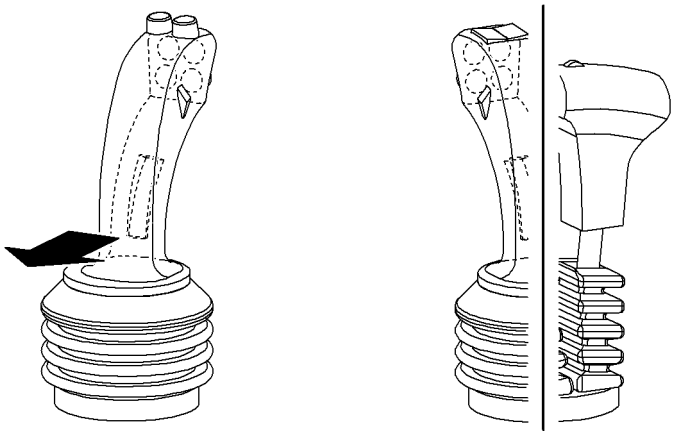

Fig. 2545: Retracting the derrick hoist cylinder

▶ Push left multi-directional control lever backwards.
  ▷ Derrick hoist cylinder retracts.

LWN/LR.x/V03.01//Auslieferung/2015-06-03/en

copyright by
LIEBHERR

4.25 Free-fall operation*

In free-fall operation rapid lowering of the empty hook is possible.

DANGER
Incorrect use of free-fall operation!
Risk of machine toppling over, structural breakdown.

- ▶ Use the free-fall operation at load position 1 (boom head section) only.
- ▶ Use free-fall operation with empty hooks only.
- ▶ All braking operations must be carried out carefully and sensitively.
- ▶ While braking the empty hook in free-fall operation, the permitted lifting capacity must not be exceeded.
- ▶ Permanently observe the load moment limitation on the *Operation* screen when braking.
- ▶ Ensure that free-fall operation is carried out be experienced and specially-trained personnel only.

4.25.1 Switching on free-fall operation

Ensure that the following conditions are fulfilled:
- ❑ Diesel engine is turned off.
- ❑ Machine is equipped with free-fall winches.

NOTICE
Incorrect switching-on of the free-fall operation!
Damage to the hydraulic system.

- ▶ Only adjust *free-fall operation* gate valve when the diesel engine is switched off.

LWN/LR.x/V03.01//Auslieferung/2015-06-03/en

copyright by
LIEBHERR

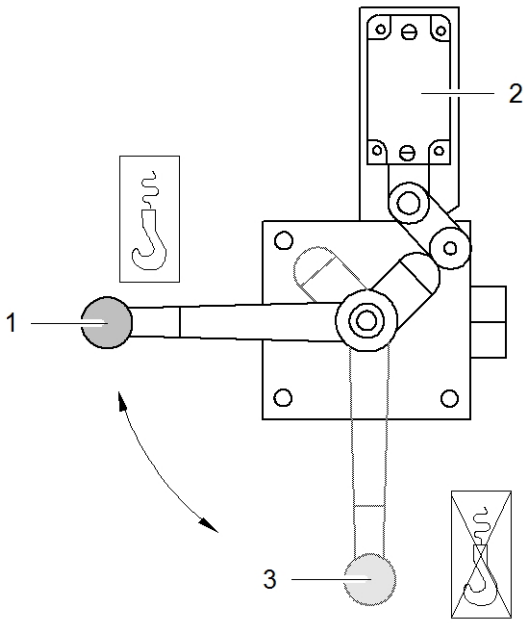

Fig. 2546: Switching on free-fall operation

1 On “position”
2 Limit switches
3 Off “position”

▶ Set the *free-fall operation* gate valve to “ON” **1**.
▷ The limit switch **2** tells the Litronic control system that free-fall operation has been switched on.
▷ Symbol *Secured free-fall operation* appears on screen:

Fig. 2547: Secured free-fall operation symbol

4.25.2 Selecting free-fall mode

Ensure that the following conditions are fulfilled:
❑ *Free-fall operation* gate valve is set to “ON”.

Selecting secured free-fall operation

Secured free-fall mode is selected by default.

If the switch *Unsecured free-fall operation* is lit on control panel *X12*:
▶ Actuate the *unsecured free-fall operation* switch on control panel *X12*.

▷ Secured free-fall mode selected.
▷ Symbol *Secured free-fall operation* appears on screen:

Fig. 2549: Secured free-fall operation symbol

LWN/LR.x/V03.01//Auslieferung/2015-06-03/en

copyright by
LIEBHERR

Selecting unsecured free-fall operation

▶ Actuate the *unsecured free-fall operation* switch on control panel *X12*.

▷ Unsecured free-fall mode is selected.
▷ Symbol *Unsecured free-fall operation* appears on screen:

Fig. 2551: Unsecured free-fall mode symbol

4.25.3 Operating free-fall operation

Ensure that the following conditions are fulfilled:
❑ *Free-fall operation* gate valve is set to “ON”.

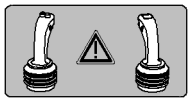

Assigned functions of the foot pedals on a machine with two multi-directional control levers

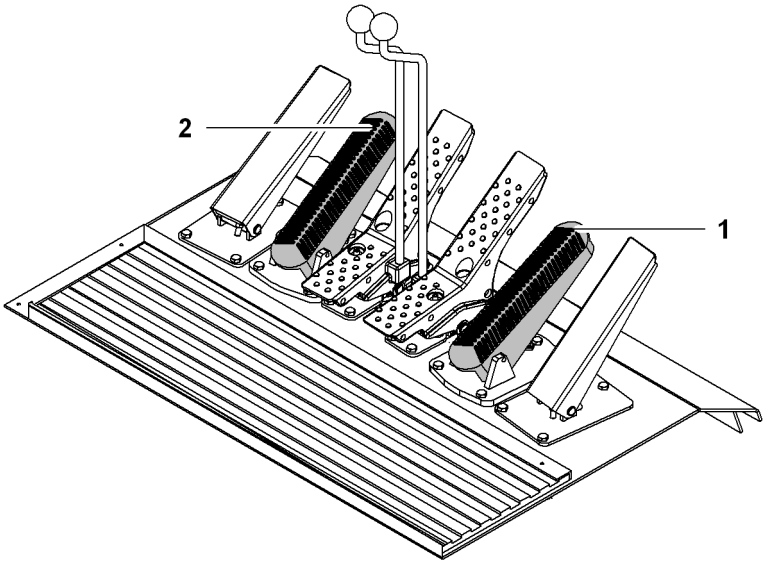

Fig. 2553: Foot pedals

1 Foot pedal *brake winch1* **2** Foot pedal *brake winch2*

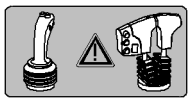

Assigned functions of the foot pedals on a machine with a multi-directional control lever and a double T-lever

LWN/LR.x/V03.01//Auslieferung/2015-06-03/en

copyright by
LIEBHERR

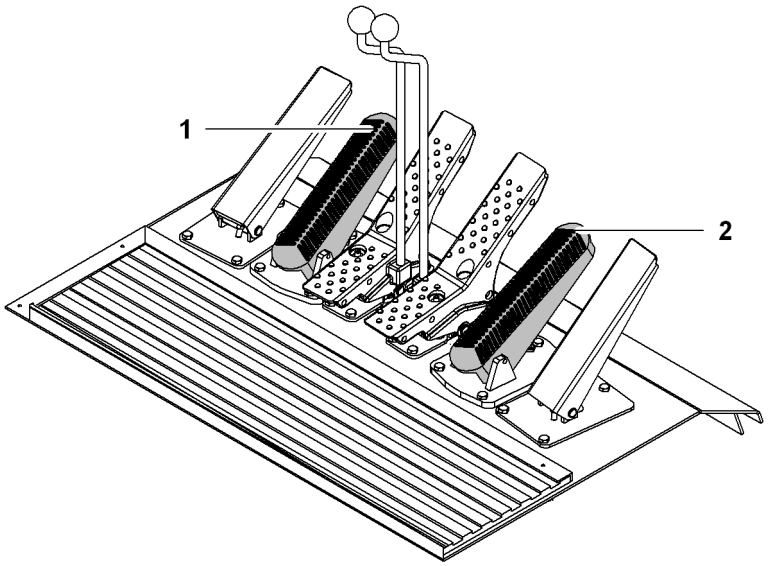

Fig. 2555: Foot pedals

1 Foot pedal *brake winch1* **2** Foot pedal *brake winch2*

The following sequence and procedure must be adhered to.

Selecting free-fall operation for winch1

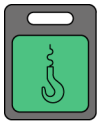

▶ Press and hold the *Free-fall* button on control panel *X23*.

▶ Fully press down on the foot pedal *Brake free-fall winch1* **1**.
▷ The symbol *Free-fall winch1* appears on screen:

Fig. 2557: Free-fall winch 1 symbol

If the symbol *Free-fall winch1* appears on screen:
▶ Release the *Free-fall* button on control panel *X23*.

Selecting free-fall operation for winch2

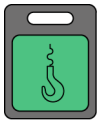

▶ Press and hold the *Free-fall* button on control panel *X23*.

▶ Fully press down on the foot pedal *Brake free-fall winch2* **2**.
▷ The symbol *Free-fall winch2* appears on screen:

Fig. 2559: Free-fall winch 2 symbol

LWN/LR.x/V03.01//Auslieferung/2015-06-03/en

copyright by
LIEBHERR

If the symbol *Free-fall winch2* appears on screen:
▶ Release the *Free-fall* button on control panel *X23*.

Lifting the empty hook in free-fall operation

WARNING
Opened multi-disk brake is in unsecured free-fall mode after raising the empty hook!
The free-fall winch is immediately back in free-fall as soon as the control lever is placed in neutral.

▶ Keep empty hook with completely depressed foot pedal *Free-fall brake winch1* or foot pedal *Free-fall brake winch2* in position.

▶ Move the appropriate control lever. The foot pedal *Free-fall brake winch1* or the foot pedal *Free-fall brake winch2* can be released, but does not have to be.

Troubleshooting
The load cannot be raised?
A winch stop monitor checks the swing movement of the free fall winches. The load can only be lifted again after the corresponding free-fall winch is at a stop.

If winch1 does not stand still:
▶ depress foot pedal *brake free-fall winch1* stronger.

If winch2 does not stand still:
▶ depress foot pedal *brake free-fall winch2* stronger.

If the problem persists:
▶ Contact Liebherr after sales service.

Lowering the empty hook in free-fall operation

CAUTION
Overrunning of winch1/winch2 rope!
Slacking of the rope
Loose and irregular winding on the free-fall winch.
3 rope windings limit switch and rope measuring system altered.

▶ Stop the free-fall winch with the appropriate foot pedal *Free-fall brake winch1* or the foot pedal *Free-fall winch2* immediately once the empty hook has touched the ground.

▶ Lowering empty hook on winch1: Release foot pedal *Brake free-fall winch1*.

▶ Lowering empty hook on winch2: Release foot pedal *Brake free-fall winch2*.

Stopping the empty hook in free-fall operation

▶ Stopping empty hook on winch1: Press foot pedal *Brake free-fall winch1*.
▷ Winch1 is braked until it comes to a stop.

▶ Stopping empty hook on winch2: Press foot pedal *Brake free-fall winch2*.
▷ Winch2 is braked until it comes to a stop.

LWN/LR.x/V03.01/Auslieferung/2015-06-03/en

copyright by
LIEBHERR

4.25.4 Switching off free-fall operation

Ensure that the following conditions are fulfilled:
❑ Winch1 and winch2 stand still.

DANGER
Winches will turn when the safety lever is pulled up!
Free-fall operation is not locked.
Machine toppling over, structural breakdown.

▶ Make sure that winches are stationary before the safety lever is pulled up.

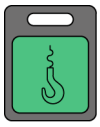

▶ Press the *Free-fall* button on control panel *X23*.

▶ Lift safety lever.

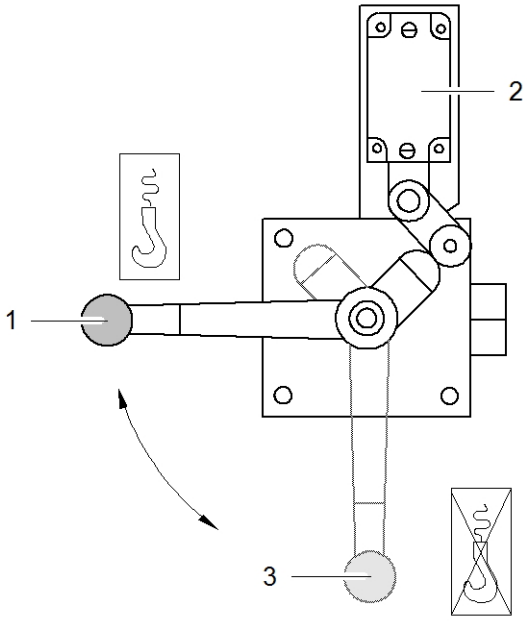

Fig. 2561: Switching off free-fall operation

1	On “position”	**3**	Off “position”
2	Limit switch		

▶ Set the *free-fall operation* gate valve to “OFF”.
▷ Free-fall mode is switched off.
▷ Symbols for free-fall mode no longer appear on the monitor.

LWN/LR.x/V03.01//Auslieferung/2015-06-03/en

copyright by
LIEBHERR

4.26 Winch synchronization*

Winch synchronization involves synchronizing the rope speeds of winch1 and winch2.

Using the winch synchronization:
– Single hook mode with two winches on one hook
– Twin hook mode with two winches on one load
– Working with crossbeams

4.26.1 Activating winch synchronization

Ensure that the following conditions are fulfilled:
❑ Winch1 rope and winch2 rope have the same length.
❑ Winch1 rope and winch2 rope are reeved evenly.
❑ Load is distributed evenly on winch1 and winch2.
❑ Winch1 and winch2 stand still.

Activate winch synchronization on control lever

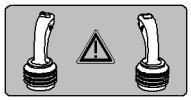

Procedure on a machine with two multi-directional control levers

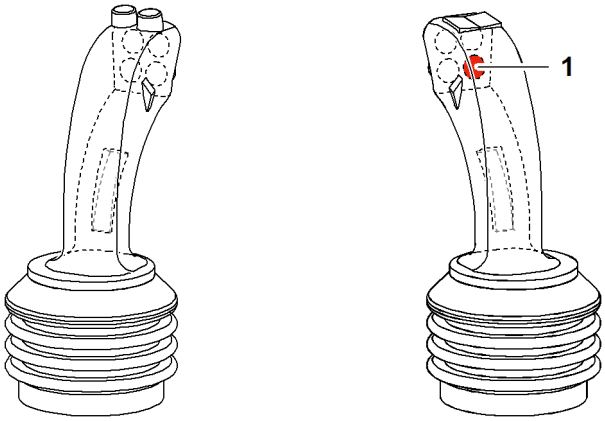

Fig. 2563: Activate winch synchronization on multi-directional control lever

1 Button *Winch synchronization*

▶ Press and hold the *Winch synchronization* **1** button on the right multi-directional control lever.
  ▷ Winch synchronization is activated until the button *Winch synchronization* is no longer pushed and winch1 and winch2 stand still.
  ▷ The symbol *Winch synchronization* appears on screen:

Fig. 2564: Winch synchronization symbol

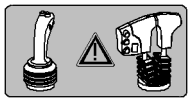

Procedure on a machine with a multi-directional control lever and a double T-lever.

LWN/LR.x/V03.01//Auslieferung/2015-06-03/en

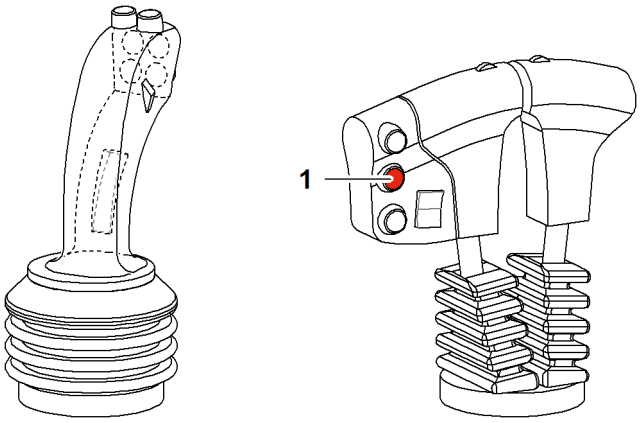

Fig. 2566: Switching the winch synchronization on using the double T-lever

1 Button *Winch synchronization*

▶ Press and hold the *Winch synchronization* **1** button on the right double T-lever.
  ▷ Winch synchronization is activated until the button *Winch synchronization* is no longer pushed and winch1 and winch2 stand still.
  ▷ The symbol *Winch synchronization* appears on screen:

Fig. 2567: Winch synchronization symbol

Activating the winch synchronization on control panel X23

▶ Press the *Winch synchronization* button on control panel *X23*.

  ▷ Winch synchronization is activated and remains on after winch1 and winch2 stand still.
  ▷ The symbol *Winch synchronization* appears on screen:

Fig. 2569: Winch synchronization symbol

4.26.2 Operating the winch synchronization

NOTICE
Incorrect adjustment of the main boom when winch synchronization is activated!
Tilting of the hook or the crossbar.
Damage to machine.

▶ Only adjust the main boom when lifting or lowering winch1 and winch2 simultaneously.

LWN/LR.x/V03.01//Auslieferung/2015-06-03/en

copyright by
LIEBHERR

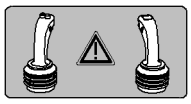

Procedure on a machine with two multi-directional control levers

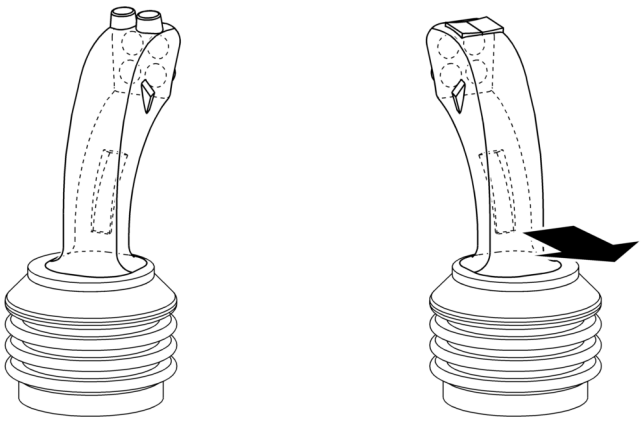

Fig. 2571: Lifting winch1 and winch2 with the multi-directional control lever

▶ Lifting winch1 and winch2: push the right multi-directional control lever backwards.
  ▷ Winch1 and winch2 lift.

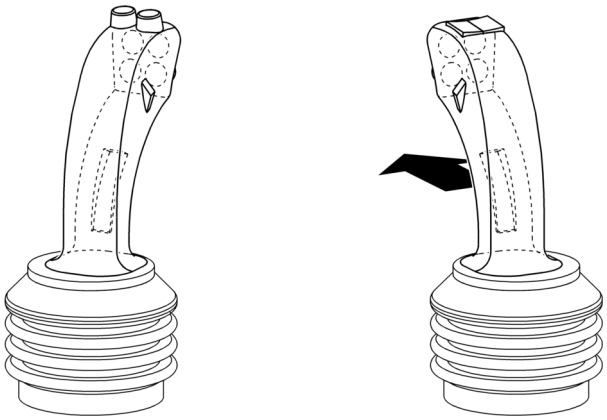

Fig. 2572: Lowering winch1 and winch2 with the multi-directional control lever

▶ Lowering winch1 and winch2: push the right multi-directional control lever forwards.
  ▷ Winch1 and winch2 lower.

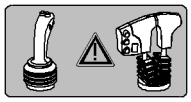

Procedure on a machine with a multi-directional control lever and a double T-lever.

LWN/LR.x/V03.01//Auslieferung/2015-06-03/en

copyright by
LIEBHERR

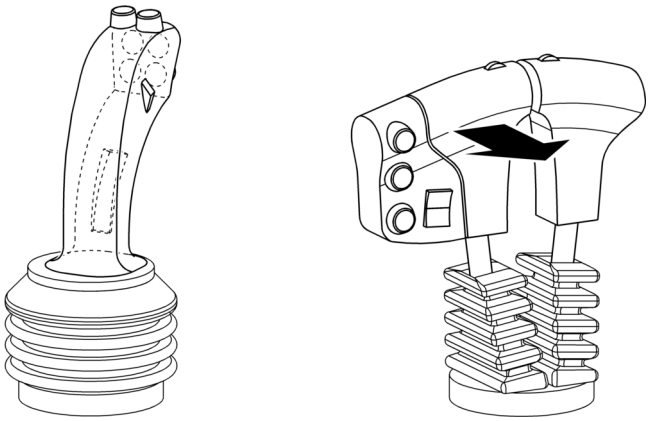

Fig. 2574: Lifting winch1 and winch2 with the double T-lever

▶ Lifting winch1 and winch2: push the inner T-bar control lever backwards.
▷ Winch1 and winch2 lift.

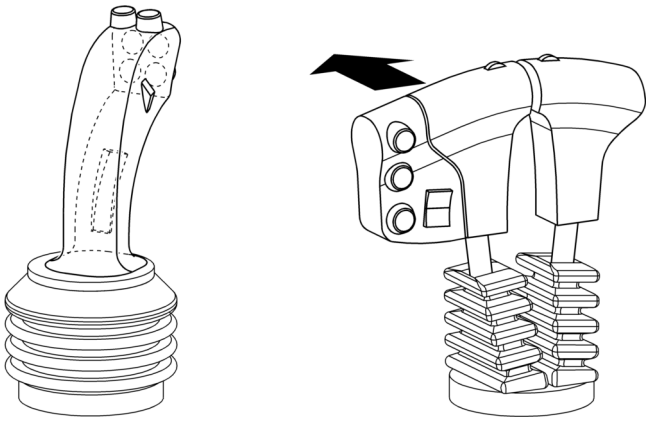

Fig. 2575: Lowering winch1 and winch2 with the double T-lever

▶ Lowering winch1 and winch2: push the inner T-bar control lever forwards.
▷ Winch1 and winch2 lower.

4.26.3 Deactivating winch synchronization

Ensure that the following conditions are fulfilled:
❑ Winch1 and winch2 stand still.

Deactivate winch synchronization on control lever

▶ Release the *Winch synchronization* button on the right control lever.
▷ Winch synchronization is switched off.

Deactivating the winch synchronization on control panel X23

▶ Press the *Winch synchronization* button on control panel *X23* again.
▷ Winch synchronization is switched off.

LWN/LR.x/V03.01//Auslieferung/2015-06-03/en

copyright by
LIEBHERR

4.27 Blocked crawlers*

To extend the tipping line of the machine, steel plates of a precise thickness can be inserted underneath the tumbler or idler. The difference in height between the running rollers and the tumbler (or the running rollers and the idler) is evened out.

Properties of blocked crawlers:
- Extension of tilting edge
- Increased load-bearing capacity
- Swing radius limitation of uppercarriage
- Traveling with machine is prohibited
- Can lead to higher ground pressures

The example below explains the system. This example only applies to one machine configuration.

DANGER
Incorrect operation of blocked crawlers!
Structural breakdown.
The structure curve specifies the minimum loading limit of the components (swing, pendant straps, A-frames, chord pipes, diagonals, etc.).

▶ Work only with values that are within the structure curve (grey load chart value).

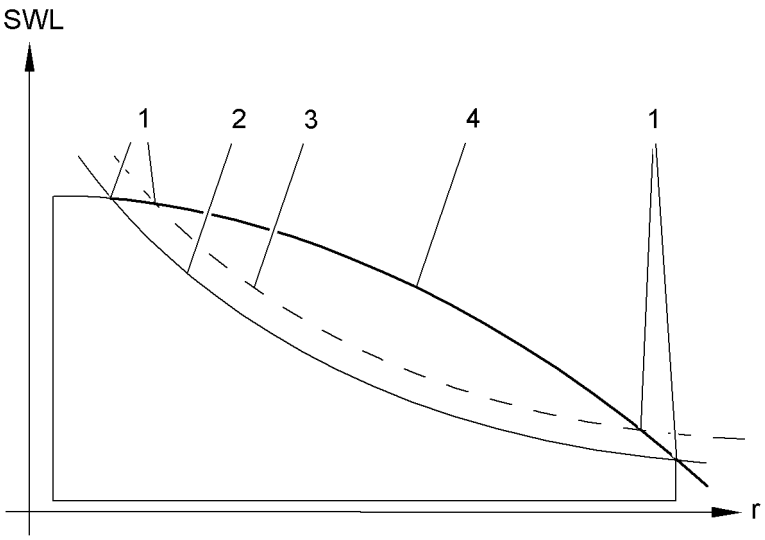

Fig. 2577: Diagram

1	Intersection between tilt curve and structure curve	**3**	Tilt curve for blocked crawlers (limited swing angle)
2	Tilt curve for maximum counter-weight (360°)	**4**	Structure curve of the machine

The tilt curve is calculated from the equilibrium of weights rotating forwards and backwards (dead weight + load weights). The minimum of the two curves gives the valid load capacity chart.

Blocked crawlers can extend the normal lifting capacity range that is limited by the machine tilt curve **2**. It may be the case that the extended tilt curve **3** is intersected by the falling structure curve **4**. If this is the case, the structure curve takes precedence with respect to the maximum radius.

Make sure that the support plates are laid out in the required thickness.

LWN/LR.x/V03.01//Auslieferung/2015-06-03/en

copyright by LIEBHERR

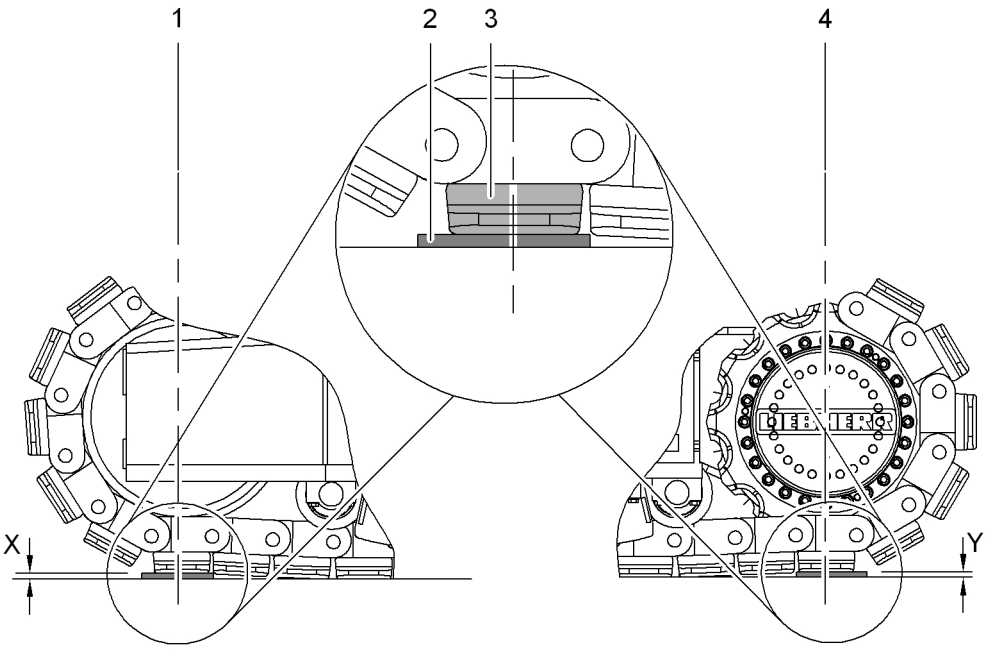

Fig. 2578: Positioning of the support plates

1	Center line of idler	**3**	Ground plate
2	Support plate	**4**	Center line of tumbler

Machine type	Idler wheel **X**	Tumbler **Y**
LR 1001	20 mm 0.79“ in	20 mm 0.79“ in
LR 1002	25 mm 0.98“ in	25 mm 0.98“ in
LR 1003	20 mm 0.79“ in	20 mm 0.79“ in
LR 1004	22 mm 0.87“ in	15 mm 0.59“ in
LR 1006	25 mm 0.98“ in	17 mm 0.67“ in

Tab. 377: Positioning of support pads

4.27.1 Driving onto the support plates

DANGER
Inappropriate driving onto support plates!
Machine toppling over.

- ▶ The left and right base plates of the crawler side frames must be positioned exactly the same so they are both driven onto the support plates at the same time.

- ▶ Equalize the crawler position on both sides simultaneously. When necessary, move the crawler side frames towards one another.
- ▶ Place support plates in front of the crawler side frames.

LWN/LR.x/V03.01//Auslieferung/2015-06-03/en

copyright by
LIEBHERR

- ▶ Move precisely onto the support plates (see: fig. 2578, page 965) .
- ▶ Lock and disable the crawler.

- ▶ Press the *Setup* button on the monitor.
  ▷ The *Setup* screen appears on the monitor.

- ▶ Press the *Setup - basic machine* button on the monitor.
  ▷ The *Setup - basic machine* screen appears on the monitor.

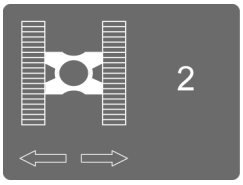

- ▶ Press the button *Track width* on the monitor and select value “3”.

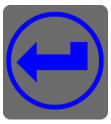

- ▶ Press the button *Calculate load chart* (lit blue) on the monitor.
  ▷ Load chart is being recalculated.

4.27.2 Working with Blocked Crawlers

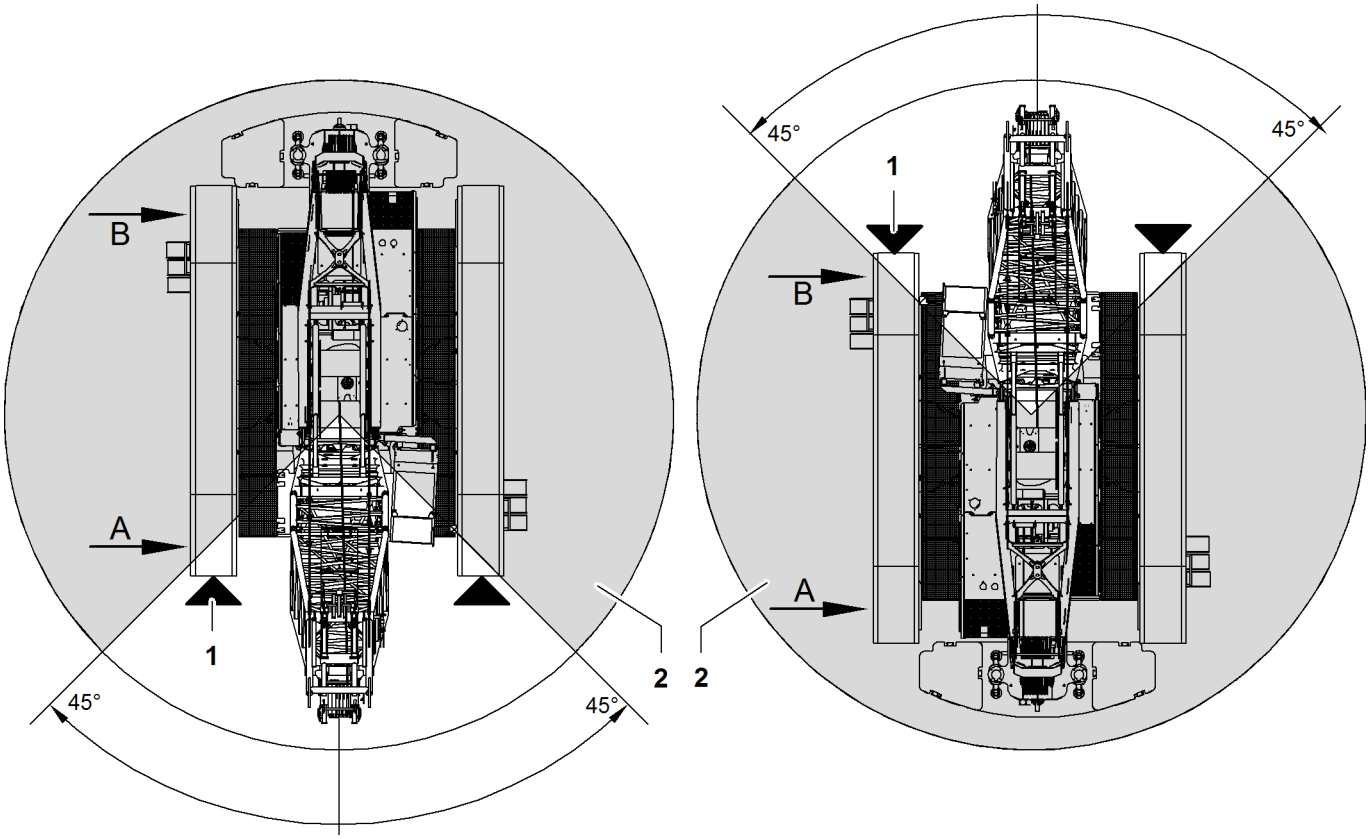

Fig. 2583: Working with blocked crawlers

1	Base plate (2x)	**A**	Tumbler (2x)
2	Blocked area	**B**	Idler (2x)

LWN/LR.x/V03.01/Auslieferung/2015-06-03/en

copyright by LIEBHERR

DANGER
Uppercarriage swing angle is too great!
Machine toppling over.

- ▶ Rotation is permitted only up to an angle of ±45° along the crawler side frames.
- ▶ Do not move into the blocked area **2**.

In EU load charts, the swing movement of the uppercarriage will be automatically restricted via the swing angle transmitter.

With ANSI load charts, responsibility for swinging the uppercarriage rests with the machine operator.

LWN/LR.x/V03.01//Auslieferung/2015-06-03/en

copyright by
LIEBHERR

4.28 Assembly cylinder *

4.28.1 Select assembly cylinder

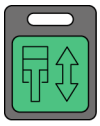

▶ Press the *Assembly cylinder* button on control panel *X23*.

4.28.2 Operating the assembly cylinder

WARNING
Individuals in the swing range of the assembly cylinder!
Severe injury.

▶ Ensure that there is nobody in the swing range of the assembly cylinder.

▶ Leave the danger area.

Extend assembly cylinder

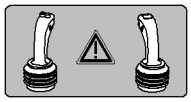

Procedure on a machine with two multi-directional control levers

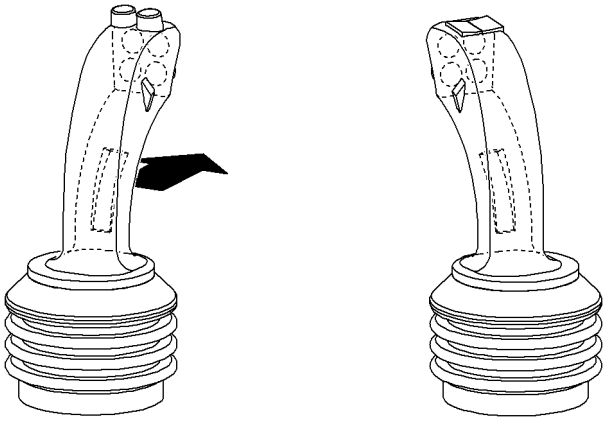

Fig. 2586: Extending the assembly cylinder with multi-directional control lever

▶ Push left multi-directional control lever forward.
▷ The assembly cylinder extends.

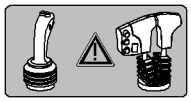

Procedure on a machine with a multi-directional control lever and a double T-lever.

LWN/LR.x/V03.01//Auslieferung/2015-06-03/en

copyright by
LIEBHERR

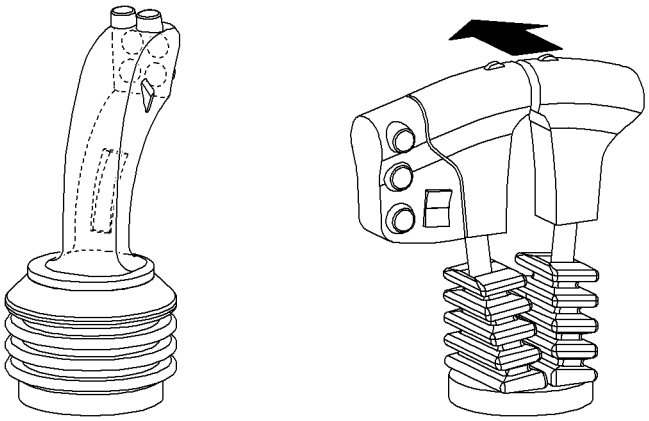

Fig. 2588: Extending the assembly cylinder using the double T-lever

▶ Push the outer T-lever forwards.
  ▷ The assembly cylinder extends.

Retract assembly cylinder

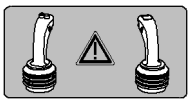

Procedure on a machine with two multi-directional control levers

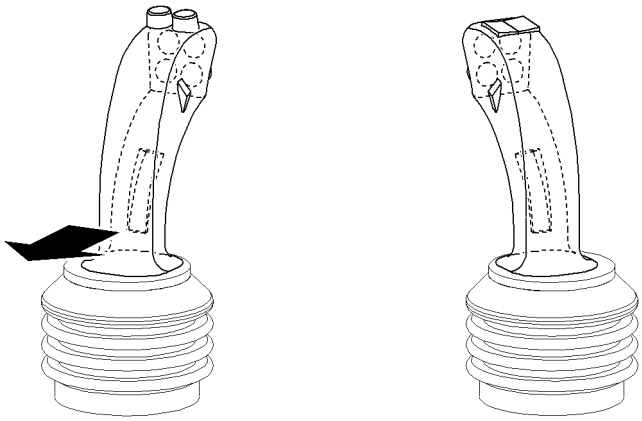

Fig. 2590: Retracting the assembly cylinder with multi-directional control lever

▶ Push the left multi-directional control lever backwards.
  ▷ The assembly cylinder retracts.

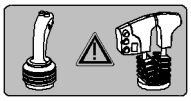

Procedure on a machine with a multi-directional control lever and a double T-lever.

LWN/LR.x/V03.01//Auslieferung/2015-06-03/en

copyright by
LIEBHERR

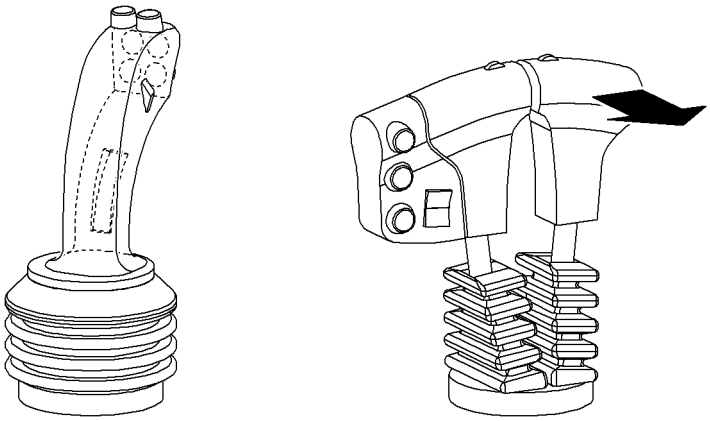

Fig. 2592: Extending the assembly cylinder using the double T-lever

▶ Push the outer T-lever backwards.
  ▷ The assembly cylinder retracts.

LWN/LR.x/V03.01//Auslieferung/2015-06-03/en

copyright by
LIEBHERR

4.29 Filling machine with fuel

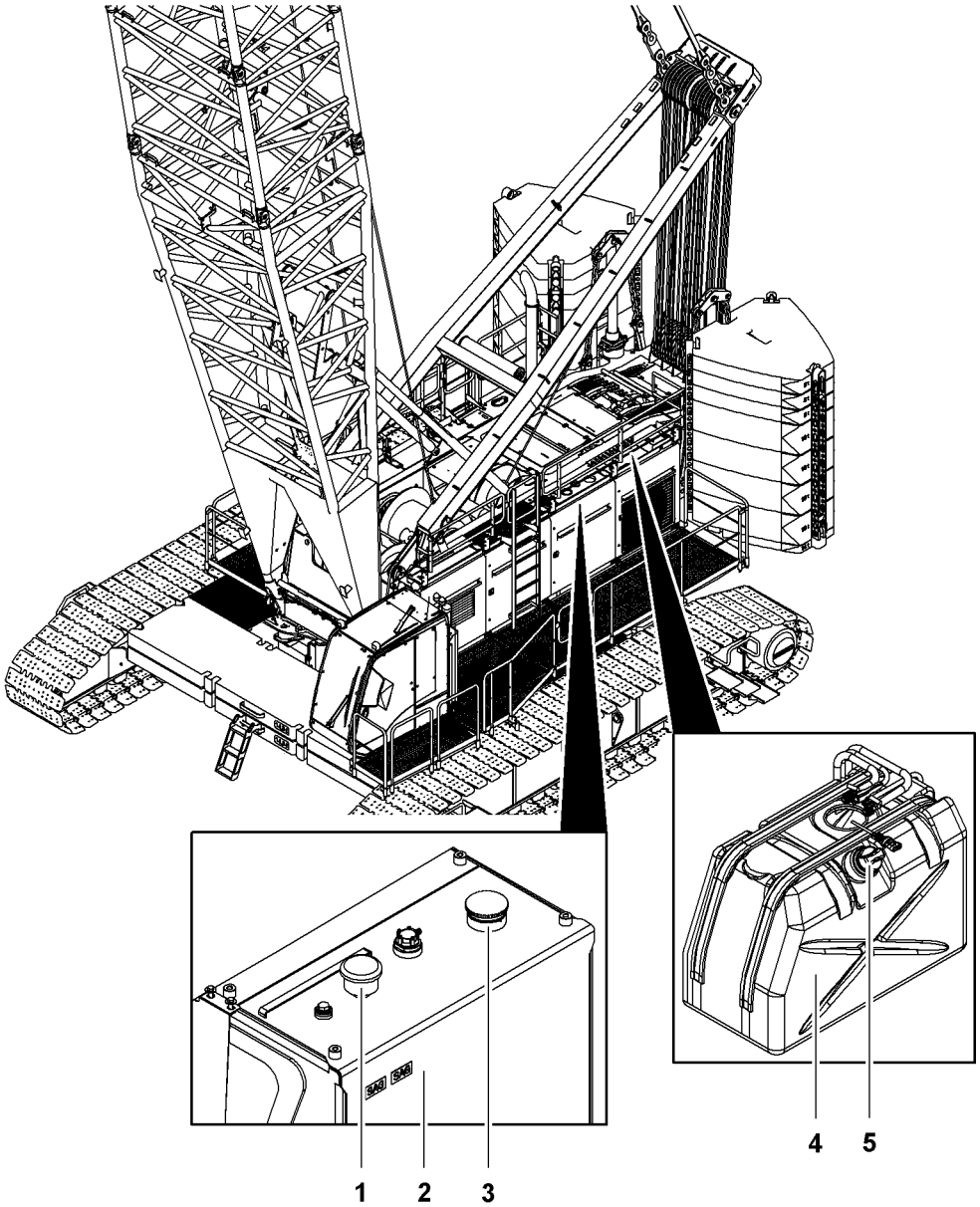

Fig. 2593: Filling machine with fuel

1 Venting filter
2 Fuel tank
3 Tank cover
4 Urea tank
5 Tank cover

4.29.1 Filling the fuel tank

Make sure the following prerequisites are met:
- ❑ Auxiliary heating* is turned off.
- ❑ External air conditioning system* is turned off.

Filling machine with fuel from a tank truck

▶ Switch off diesel engine.

LWN/LR.x/V03.01//Auslieferung/2015-06-03/en

copyright by
LIEBHERR

- ▶ Direct tank truck to the refueling point.
- ▶ Unlock and remove the tank cover **3**.
- ▶ Check the filler screen underneath for dirt, clean and replace if necessary.
- ▶ Fill the fuel tank **2** with the appropriate fuel according to the season (summer or winter diesel) (For more information see: 9.2.5 Fuel, page 1806) .
- ▶ Close and lock tank cover **3**.

Filling the machine with fuel from a refueling pump

NOTICE
Incorrect use of refueling pump!
Damage to the refueling pump.

- ▶ Refueling pump must only be used for pumping fuel.
- ▶ Only use the supplied suction hose.
- ▶ Ensure that the refueling pump does not run dry.

- ▶ Switch off diesel engine.
- ▶ Turn ignition key to position “1”.

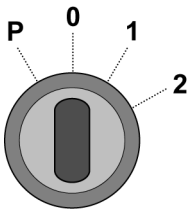

- ▶ Position fuel container.
- ▶ Open the center right uppercarriage door.
- ▶ Remove cover from refueling pump.
- ▶ Attach suction hose to refueling pump connector.
- ▶ Totally immerse other end of the hose with the fuel filter in the fuel.
- ▶ Press the *Pump ON* (green) button on the control panel of the refueling pump.
  - ▷ Pump starts to run.
  - ▷ As soon as the maximum filling capacity is reached, the refueling pump shuts off automatically.
- ▶ Remove the suction hose from the refueling pump and hold it up, allowing the remaining fuel to flow back into the fuel container.
- ▶ Roll up suction hose and stow it away.
- ▶ Replace cover on refueling pump.
- ▶ Close the center right uppercarriage door.

4.29.2 Fuelling up with urea solution

- ▶ Switch off diesel engine.
- ▶ Open cover of urea tank **4**.
- ▶ Remove tank cover **5**.
- ▶ Fill urea tank **4** with urea solution.
- ▶ Close tank cover **5**.

LWN/LR.x/V03.01//Auslieferung/2015-06-03/en

4.30 Radio remote control*

4.30.1 rechargeable battery

The battery's service life depends on its age and the ambient temperature. Older batteries lose power over time. At temperatures below 0 °C (32 °F) the battery will not reach its full capacity.

NOTICE
Incorrect handling of rechargeable battery!
Risk of damage to the rechargeable battery.

- ▶ Completely charge the battery before first use.
- ▶ Only recharge the battery after it has been completely drained.
- ▶ Protect the charger against overheating, dust and humidity.
- ▶ Only store the charger at room temperature (20 °C (68 °F)).
- ▶ When putting into storage, use the protective caps provided.
- ▶ Charge the battery before use if it has been stored for a long time.

4.30.2 battery charger

NOTICE
Incorrect handling of the battery charger!
Risk of damage to battery charger or rechargeable battery.

- ▶ Protect the charger against overheating, dust and humidity.
- ▶ Do not make any technical modifications to the charger or power cable.

If a defect occurs in the charger or power cable:

- ▶ Take the battery charger out of service immediately.
- ▶ Ensure that repairs are carried out by qualified personnel only.

Charging the rechargeable battery with a battery charger

NOTICE
Incorrect charging of the rechargeable battery!
Risk of damage to battery charger or rechargeable battery.

- ▶ Only charge batteries of type FuB 10 AA or FuB 10 XL with the battery charger QA115600.
- ▶ Only operate the battery charger in explosion-protected areas.
- ▶ Only use the battery charger at the permitted mains voltage (marking on the bottom of the battery charger).
- ▶ Operate the charger in enclosed spaces only.
- ▶ Only operate the charger at room temperature (20 °C (68 °F)).
- ▶ Do not cover the charger while it is in use.

LWN/LR.x/V03.01//Auslieferung/2015-06-03/en

copyright by LIEBHERR

▶ Plug the charger connector plug into the power source.

Double-check that the polarity of the battery is correct.

▶ Insert the battery into the charging slot with the writing facing outwards.
▷ Charging begins automatically.

4.30.3 Starting the machine with the radio remote control

WARNING
Improper use of the radio remote control!
Severe injuries, damage to machine.

▶ Ensure that the working range is visible from all sides.

▶ Ensure visual contact with the machine and the load at all times.

▶ Turn radio remote control off when changing location, during work breaks or at the end of work.

▶ Only stow away completely turned off radio remote control.

▶ Only remain outside the danger zone.

▶ Ensure that only authorised and instructed persons operate the radio remote control.

WARNING
Errors or defects while operating the radio remote control!
Inadmissible operational safety and reliability.
Severe injuries, damage to machine.

▶ Turn radio remote control off.

▶ Secure radio remote control against unauthorized startup.

▶ Press the *Radio remote control* switch on control panel *X12*.

▶ Contact Liebherr after sales service.

WARNING
Improper procedure with occurring error message!
Severe injuries, damage to machine.

In case of an error message:
▶ Adjust the mode with the radio remote control.

▶ Remedy error message on the monitor in the cabin.

The use of a radio remote control has the following disadvantages:
– Machine reactions seem delayed.
– The movement direction may be confusing depending on location and viewpoint.

Preparing the machine with the radio remote control

Ensure that the following conditions are fulfilled:
❑ Ignition is switched off.
❑ Safety lever is lowered.

LWN/LR.x/V03.01/Auslieferung/2015-06-03/en

copyright by
LIEBHERR

▶ Press the *Radio remote control* switch on control panel *X12*.
▷ The function of the ignition key on the machine is replicated on the rotary control knob *ON/OFF* of the radio remote control.
▷ The control levers in the cabin are deactivated.
▷ The monitor in the cabin is activated to display error messages.

Activating the radio remote control

Ensure that the following conditions are fulfilled:
❑ Battery of the radio remote control is charged and in perfect state.
❑ Radio remote control battery is inserted in radio remote control.
❑ Control levers are in zero position.

▶ Set the rotary control knob *ON/OFF* on the radio remote control to “ON”.
▷ Connection established between radio remote control and machine.
Once the radio connection has been established:
▷ The screen *Confirm connection* appears on the monitor of the radio remote control:

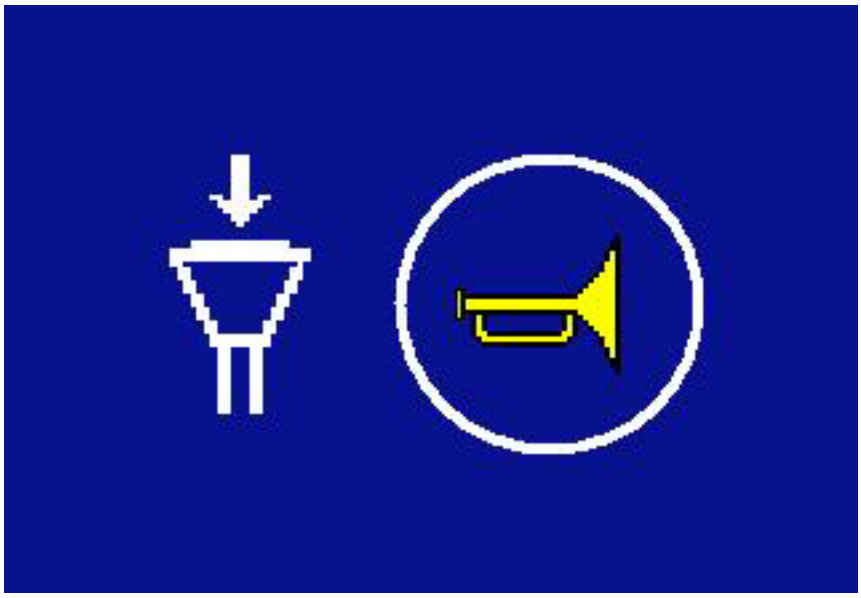

Fig. 2596: Screen Confirm connection

▶ Press the *Horn* button on the right control lever of the radio remote control.
▷ Machine functions are controlled with the radio remote control.
▷ The *Mode* screen is displayed on the monitor of the radio remote control:

LWN/LR.x/V03.01//Auslieferung/2015-06-03/en

copyright by
LIEBHERR

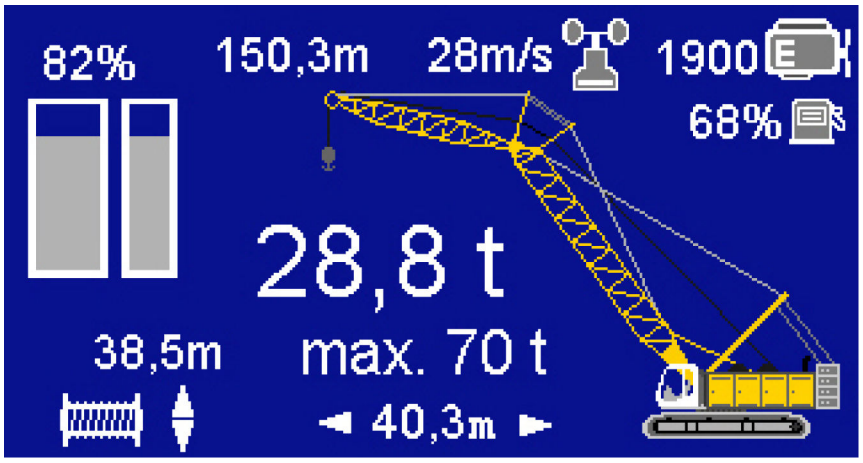

Fig. 2597: Operation screen

▷ The symbol *Preheat* is displayed on the monitor of the radio remote control:

Fig. 2598: Preheat symbol

Turning the diesel engine on or off

Ensure that the following conditions are fulfilled:
❑ Symbol *Preheat* is hidden on the monitor of the radio remote control.

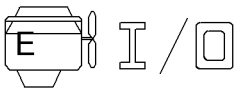

▶ Press the button *Diesel engine* on the radio remote control.
▷ Diesel engine is turned on.

▶ Press the button *Diesel engine* on the radio remote control again.
▷ The diesel engine is switched off.

Take/cede control

Ensure that the following conditions are fulfilled:
❑ Control levers are in zero position.

Take/cede control to/from radio remote control

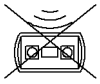

▶ Press the button *Take/cede control* on the radio remote control.

▷ Control of machine functions is suspended.
▷ All machine functions are stopped.
▷ Symbol *Radio remote control locked* is displayed on the monitor of the radio remote control:

LWN/LR.x/V03.01/Auslieferung/2015-06-03/en

Fig. 2601: Symbol Radio remote control blocked (blinks)

▷ Symbol *Radio remote control* inactive* blinks on cabin monitor:

Fig. 2602: Symbol Radio remote control inactive*

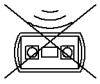

▶ Press the button *Take/cede control* on the radio remote control again.

▷ Control of the machine functions is ceded to the radio remote control.
▷ Symbol *Radio remote control locked* is hidden on the monitor of the radio remote control.
▷ Symbol *Radio remote control* active* is displayed on the cabin monitor:

Fig. 2604: Symbol Radio remote control active*

Taking/ceding control in cabin

▶ Press the *Take/cede control* button on control panel *X23*.

▷ Control of machine functions is suspended.
▷ All machine functions are stopped.
▷ Symbol *Radio remote control locked* is displayed on the monitor of the radio remote control:

Fig. 2606: Symbol Radio remote control blocked (blinks)

▷ Symbol *Radio remote control* inactive* blinks on cabin monitor:

Fig. 2607: Symbol Radio remote control inactive*

▶ Press the button *Take/cede control* on control panel *X23* again.

LWN/LR.x/V03.01//Auslieferung/2015-06-03/en

copyright by
LIEBHERR

▷ Control of the machine functions is ceded to the cabin.
▷ Symbol *Radio remote control locked* is lit on the monitor of the radio remote control:

Fig. 2609: Symbol Radio remote control blocked (lit)

▷ Symbol *Radio remote control* inactive* is lit on cabin monitor:

Fig. 2610: Symbol Radio remote control inactive*

Connection interruptions

Remedying radio transmission interruptions of less than 8 seconds

Machine functions are controlled with the radio remote control.

▶ Radio connection is interrupted.
  ▷ Winches, swing and crawlers are disabled.
  ▷ Movements are braked using integration times.
  ▷ Symbol *Radio remote control* connection error* is displayed on the cabin monitor:

Fig. 2611: Symbol Radio remote control connection error*

  ▷ Radio connection is automatically reestablished within 8 seconds.

▶ Put control lever to zero position.
  ▷ Control of machine functions is released.

Remedying radio transmission interruptions longer than 8 seconds

Machine functions are controlled with the radio remote control.

▶ Connection interruption lasts longer than 8 seconds.
  ▷ Receiver of radio remote control triggers emergency stop.
  ▷ Symbol *Radio remote control* connection error* is displayed on the cabin monitor:

Fig. 2612: Symbol Radio remote control connection error*

  ▷ Radio connection is reestablished automatically.

LWN/LR.x/V03.01//Auslieferung/2015-06-03/en

▷ The screen *Confirm connection* appears on the monitor of the radio remote control:

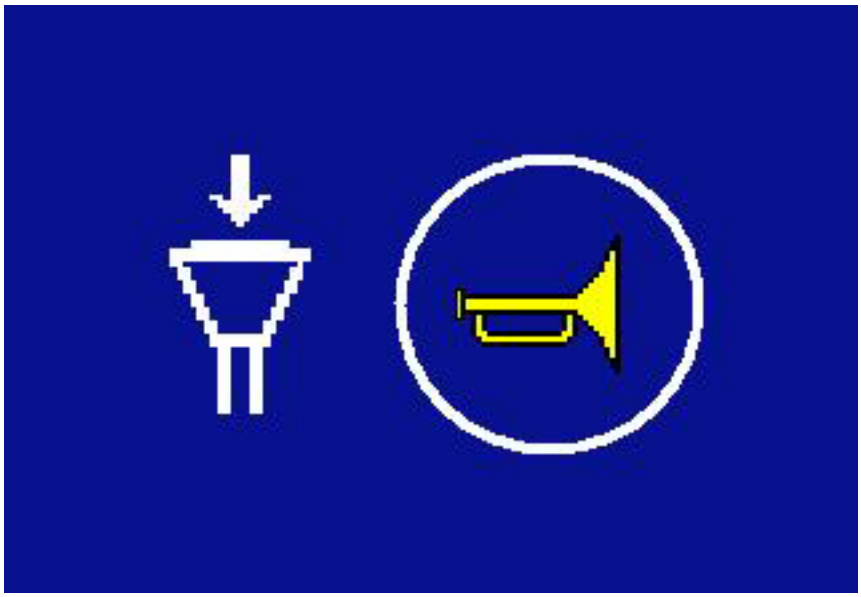

Fig. 2613: Screen Confirm connection

▶ Press the *Horn* button on the right control lever of the radio remote control.
▷ The machine control is switched on.
▷ Connection between receiver of radio remote control and machine control is established.
▷ If the connection is successfully established, the screen *Mode* appears on the monitor of the radio remote control:

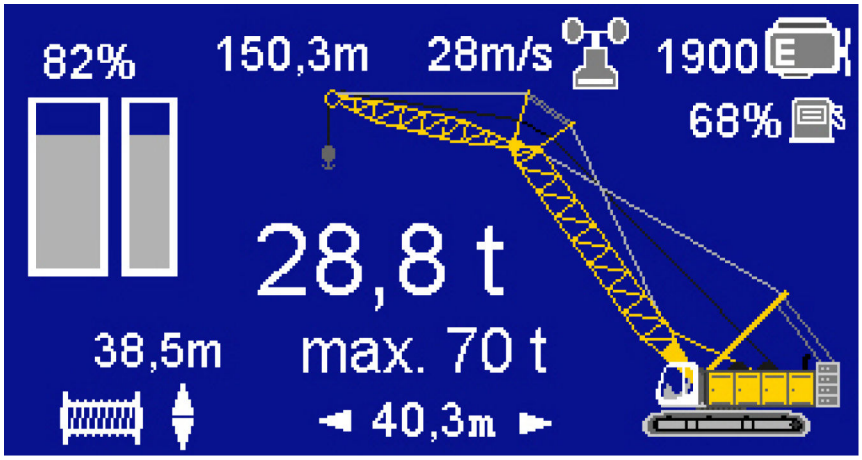

Fig. 2614: Mode screen

LWN/LR.x/V03.01//Auslieferung/2015-06-03/en

copyright by
LIEBHERR

4.31 Rope measuring system*

The rope measuring system:
– displays the calculated rope length between the boom head and the load on the *Operation* screen and the *Settings* screen.
– keeps the machine operator constantly informed of the exact position of the load
– is displayed separately for each winch.

4.31.1 Setting the rope length to zero

Setting the rope length of winch1 to zero

▶ Press the *Settings* button on the monitor.

▶ Press the *Set to zero* button at winch1 for more than 1 second on the monitor.
▷ Rope length of winch1 is set to zero

Setting the rope length of winch2 to zero

▶ Press the *Settings* button on the monitor.

▶ Press the *Set to zero* button at winch2 for more than 1 second on the monitor.
▷ Rope length of winch2 is set to zero

4.31.2 Calibrating the rope measuring system

Programming layer change

To display the rope length exactly, a layer change must be programmed for the winch concerned.

The layer change:
– is programmed when the machine leaves the factory.
– normally only has to be reprogrammed after a rope change or winch repair.

Ensure that the following conditions are fulfilled:
❑ An assistant is available.
❑ Unobstructed eye contact between the assistant and the machine operator.

Programing rope layer change 1-2

▶ Press the *Settings* button on the monitor.

LWN/LR.x/V03.01//Auslieferung/2015-06-03/en

copyright by
LIEBHERR

- Operate winch1 or winch2 until the rope moves from the first to the second layer.
- Stop winch1 or winch2 precisely at the layer change.

- Press the *Program rope layer change 1-2* button at winch1 or winch2 for more than 1 second on the monitor.
  ▷ Layer change is programmed.

Programing rope layer change 3-4

- Press the *Settings* button on the monitor.
- Operate winch1 or winch2 until the rope moves from the third to the fourth layer.
- Stop winch1 or winch2 precisely at the layer change.

- Press the *Program rope layer change 3-4* button at winch1 or winch2 for more than 1 second on the monitor.
  ▷ Layer change is programmed.

Programing rope layer change 5-6

- Press the *Settings* button on the monitor.
- Operate winch1 or winch2 until the rope moves from the fifth to the sixth layer.
- Stop winch1 or winch2 precisely at the layer change.

- Press the *Program rope layer change 5-6* button at winch1 or winch2 for more than 1 second on the monitor.
  ▷ Layer change is programmed.

Setting the rope length to 15 windings

With short ropes with which the second layer cannot be reached, the rope measuring system can be calibrated with 15 windings on the first layer.

- Press the *Settings* button on the monitor.
- Operate winch1 or winch2 until there are exactly 15 windings on the first layer.

- Press the button *Set rope length to 15 windings* on winch1 or winch2 for more than 1 second on the monitor.
  ▷ Rope measuring system is calibrated.

LWN/LR.x/V03.01//Auslieferung/2015-06-03/en

copyright by
LIEBHERR

4.32 Ground pressure display*

4.32.1 Operating the ground pressure display

DANGER
Ground has a limited bearing strength!
Machine toppling over.

▶ Observe the safety notes regarding the load-bearing capacity of the ground (For more information see: 2.11.11 Ground bearing strength, page 586) .

DANGER
Idealized, theoretical ground pressure display values.
Machine toppling over.

▶ Note that considerably higher ground pressure values can occur in the field.

The ground pressure indicator on the *Operation* screen shows the ground pressure in bar (psi) calculated by the control independent of the position of the uppercarriage.

The displayed values are theoretical maximum values based on current load and radius.

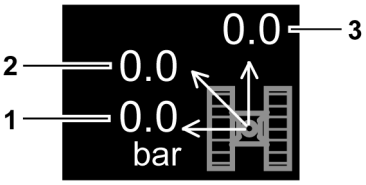

Fig. 2627: Screen clipping Ground pressure

1	Maximum ground pressure to the side	**3**	Maximum ground pressure forward
2	Maximum ground pressure across one edge		

– Maximum ground pressure to the side **1**: Uppercarriage swung in direction of travel or in opposite direction (0° (0°)/180° (180°))
– Maximum ground pressure across one edge **2**: Uppercarriage swung over one of the four edges of the undercarriage (45° (45°)/135° (135°)/225° (225°)/ 315° (315°))
– Maximum ground pressure forward **3**: Uppercarriage swung diagonally to the direction of travel (90° (90°)/270° (270°))

LWN/LR.x/V03.01//Auslieferung/2015-06-03/en

copyright by
LIEBHERR

4.33 Inclination display*

4.33.1 Operating the inclinometer

The inclination indicator on the screen *Operation* shows the angle of the uppercarriage in the x and y axis in degrees.

Values up to ± 5° can be displayed.

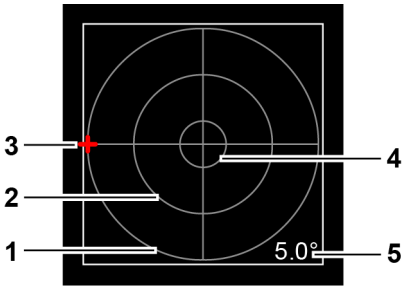

Fig. 2628: Screen clipping Inclination display

1 Inclination circle 5°
2 Inclination circle 3°
3 Spirit level
4 Inclination circle 1°
5 Inclination angle of machine

LWN/LR.x/V03.01//Auslieferung/2015-06-03/en

copyright by
LIEBHERR

4.34 Working range limitation*

WARNING
Exceeding of working range limitation through dynamic and inertia!
Severe injuries, collision of machine with obstacles.

- ▶ Program working range limitation with safety distance.
- ▶ Approach the working range limitations slowly.

WARNING
Incorrect working range limitations after moving the machine!
Severe injuries, damage to machine.

- ▶ Check working range limitations after each time the machine is moved and reprogram if necessary.

4.34.1 Operating the edge limitation

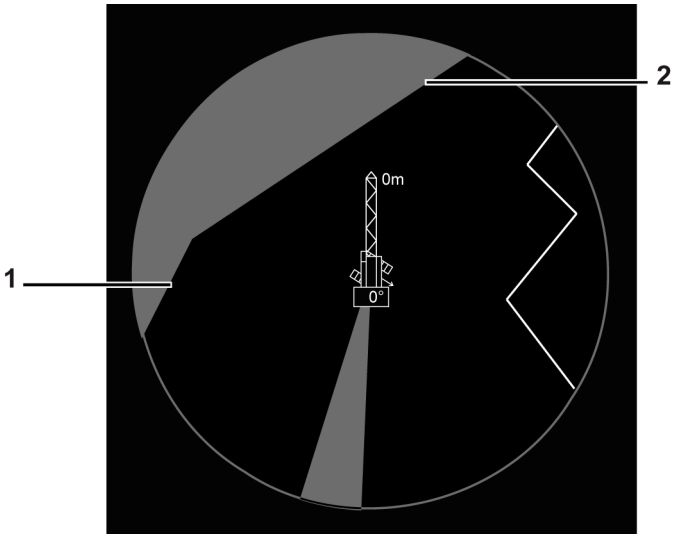

Fig. 2629: Screen section Working range limitation - edge limitation

1 Edge1 **2** Edge2

Programming the edge limitation

The procedure for programing the edge limitation is identical for the main boom and the jib.

- ▶ Press the *Working range limitation* button on the monitor.
  - ▷ Screen *Working range limitation - working range limitation* is displayed.

- ▶ Press the *Programming* button on the monitor.
  - ▷ The stop positions buttons appear.

- ▶ Edge1 - approach stop position1.

LWN/LR.x/V03.01/Auslieferung/2015-06-03/en

copyright by
LIEBHERR

▶ Press the button *Edge limitation - edge1 - stop position1* on the monitor.

▶ Edge1 - approach stop position2.

▶ Press the button *Edge limitation - edge1 - stop position2* on the monitor.
▷ Edge1 is programed.

▶ Edge2 - approach stop position1.

▶ Press the button *Edge limitation - edge2 - stop position1* on the monitor.

▶ Edge2 - approach stop position2.

▶ Press the button *Edge limitation - edge2 - stop position2* on the monitor.
▷ Edge2 is programed.

Turning the edge limitation on or off

▶ Press the *Edge limitation* button on the monitor.

▷ Edge limitation is activated:

LWN/LR.x/V03.01//Auslieferung/2015-06-03/en

copyright by
LIEBHERR

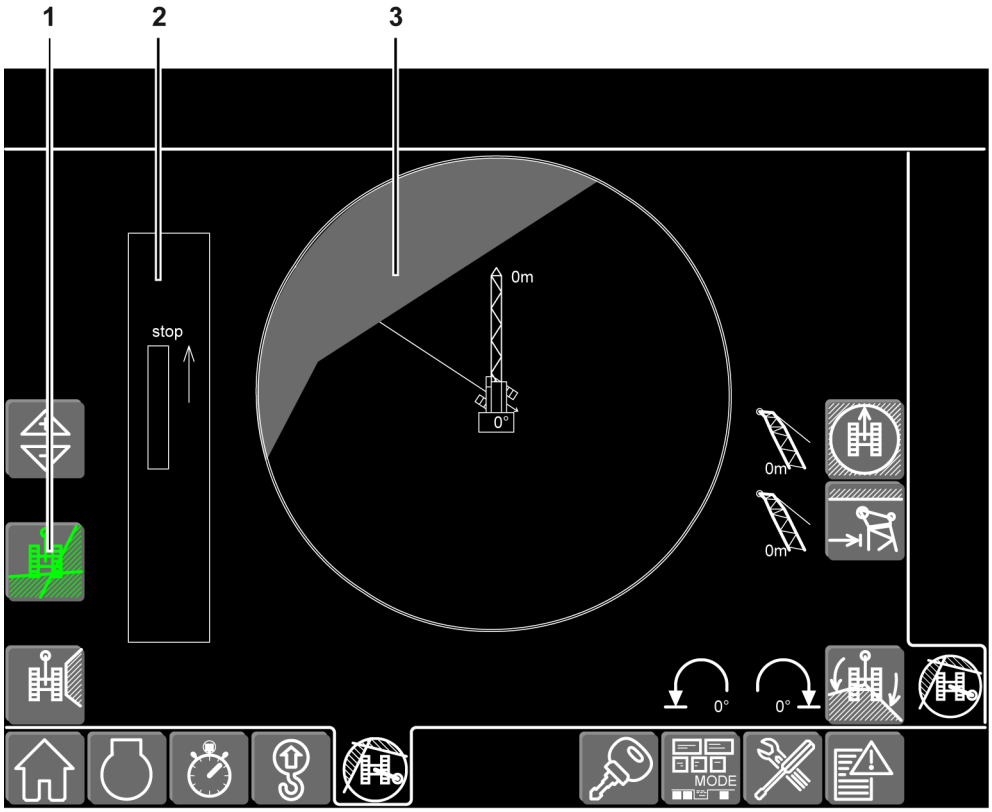

Fig. 2637: Screen Working range limitation - working range limitation - edge limitation activated

1 Button *Edge limitation*
2 Bar display
3 Programmed edge limitation

▶ Press the button *Edge limitation* (lit green) on the monitor.
▷ The edge limitation is switched off.

LWN/LR.x/V03.01//Auslieferung/2015-06-03/en

4.34.2 Operating the sector limitation

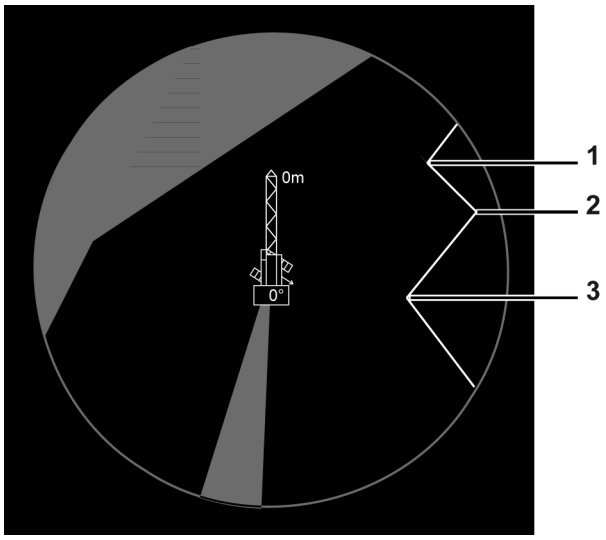

Fig. 2639: Screen section Working range limitation - sector limitation

1 Stop position1
2 Stop position2
3 Stop position3

Programing the sector limitation

The procedure for programing the sector limitation is identical for the main boom and the jib.

▶ Press the *Working range limitation* button on the monitor.
▷ Screen *Working range limitation - working range limitation* is displayed.

▶ Press the *Programming* button on the monitor.
▷ The stop positions buttons appear.

▶ Approach stop position1.

▶ Press the button *Sector limitation - stop position1* on the monitor.

▶ Approach stop position2.

▶ Press the button *Sector limitation - stop position2* on the monitor.

▶ Approach stop position3.

▶ Press the button *Sector limitation - stop position3* on the monitor.
▷ Sector limitation is programed.

LWN/LR.x/V03.01//Auslieferung/2015-06-03/en

copyright by
LIEBHERR

Turning the sector limitation on or off

▶ Press the *Sector limitation* button on the monitor.

▷ Sector limitation is activated:

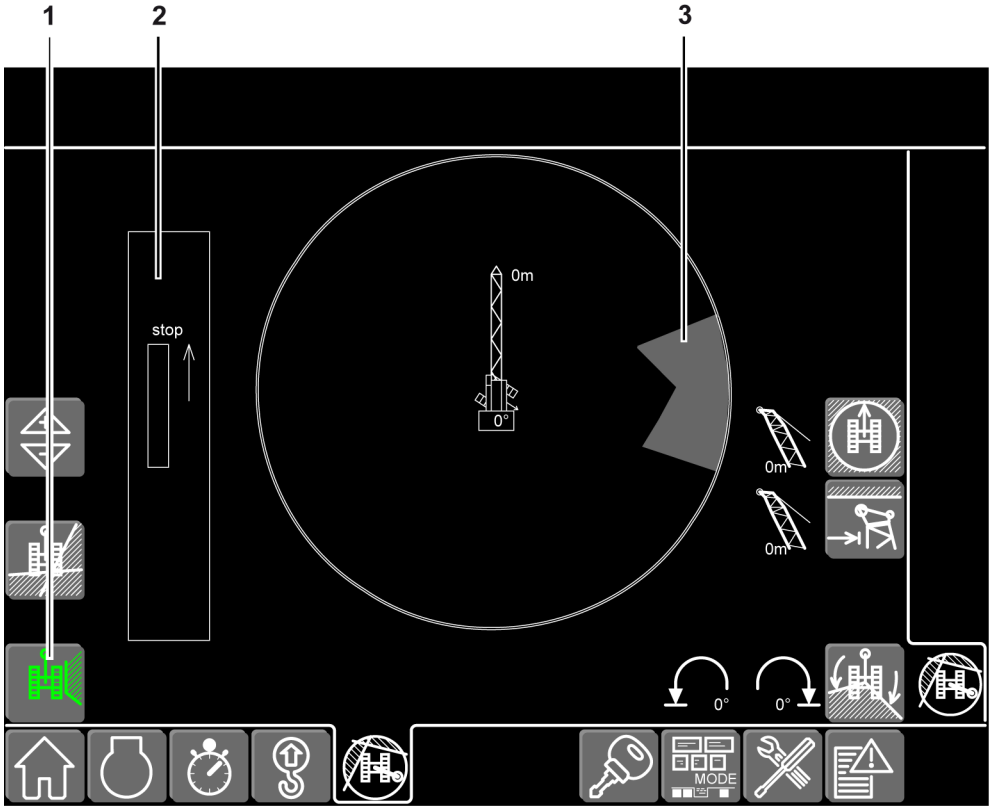

Fig. 2646: Screen Working range limitation - working range limitation - sector limitation activated

1 Button *Sector limitation*
2 Bar display
3 Programmed sector limitation

▶ Press the button *Sector limitation* (lit green) on the monitor.
▷ Sector limitation is switched off.

LWN/LR.x/V03.01//Auslieferung/2015-06-03/en

copyright by
LIEBHERR

4.34.3 Operating the radius limitation

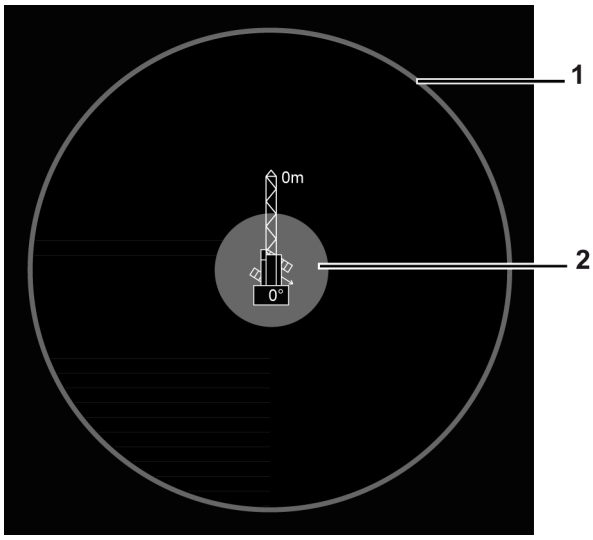

Fig. 2648: Screen section Working range limitation - radius limitation

1 Maximum radius **2** Minimum radius

Programing the main boom radius limitation

▶ Press the *Working range limitation* button on the monitor.
▷ Screen *Working range limitation - working range limitation* is displayed.

▶ Press the *Programming* button on the monitor.
▷ The stop positions buttons appear.

▶ Approach the stop position of the maximum main boom radius.

▶ Press the button *Stop position maximum main boom radius* next to the button *Radius limitation maximum main boom radius* on the monitor.
▷ Radius limitation maximum main boom radius is programed.

▶ Approach the stop position of the minimum main boom radius.

▶ Press the button *Stop position minimum main boom radius* next to the button *Radius limitation minimum main boom radius* on the monitor.
▷ Radius limitation minimum main boom radius is programed.

Programing the jib radius limitation

▶ Press the *Working range limitation* button on the monitor.
▷ Screen *Working range limitation - working range limitation* is displayed.

▶ Press the *Programming* button on the monitor.
▷ The stop positions buttons appear.

▶ Approach the stop position of the maximum jib radius.

LWN/LR.x/V03.01//Auslieferung/2015-06-03/en

copyright by
LIEBHERR

▶ Press the button *Stop position maximum jib radius* next to the button *Radius limitation maximum jib radius* on the monitor.
▷ Radius limitation maximum jib radius is programed.

▶ Approach the stop position of the minimum jib radius.

▶ Press the button *Stop position minimum jib radius* next to the button *Radius limitation minimum jib radius* on the monitor.
▷ Radius limitation minimum jib radius is programed.

Activating/deactivating the radius limitation

Activating/deactivating the minimum radius radius limitation

▶ Press the button *Radius limitation minimum radius* for main boom or jib on the monitor.

▷ Radius limitation minimum radius is activated for main boom or jib:

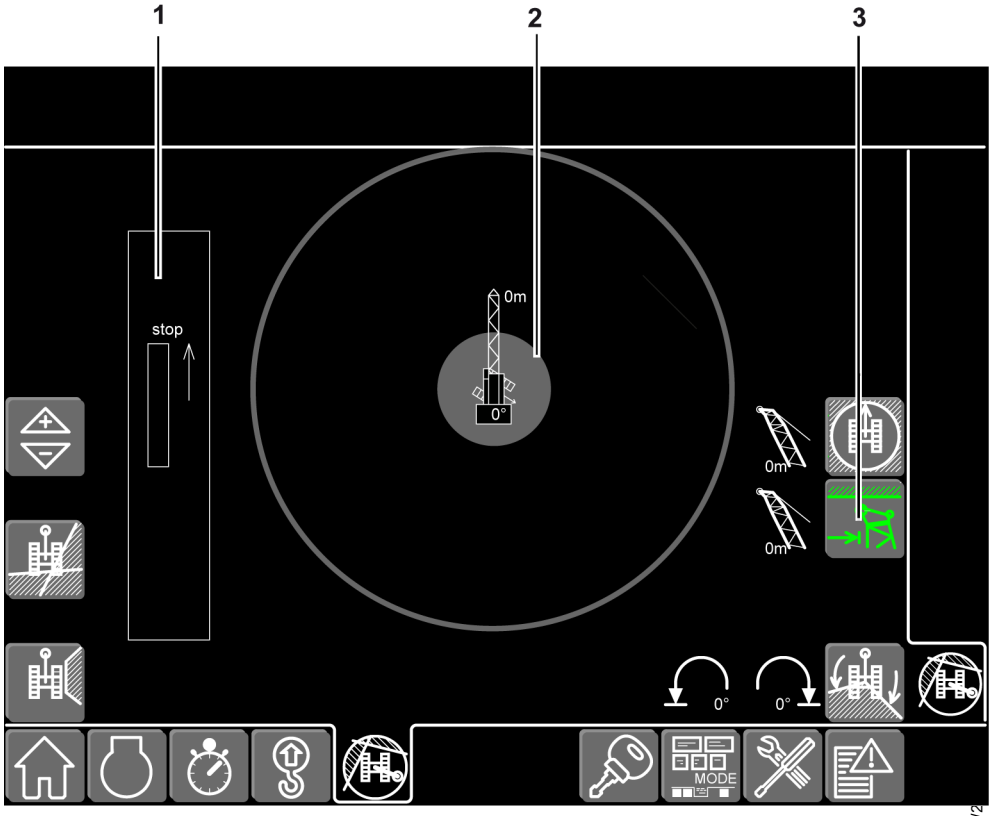

Fig. 2658: Screen Working range limitation - working range limitation - radius limitation minimum radius activated

1 Bar display

2 Programmed radius limitation minimum radius

3 Button *Radius limitation minimum radius*

LWN/LR.x/V03.01//Auslieferung/2

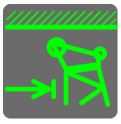

▶ Press the button *Radius limitation minimum radius* (lit green) for main boom or jib on the monitor.
▷ Radius limitation minimum radius is deactivated for main boom or jib.

copyright by
LIEBHERR

Activating/deactivating the maximum radius radius limitation

▶ Press the button *Radius limitation maximum radius* for main boom or jib on the monitor.

▷ Radius limitation maximum radius is activated for main boom or jib:

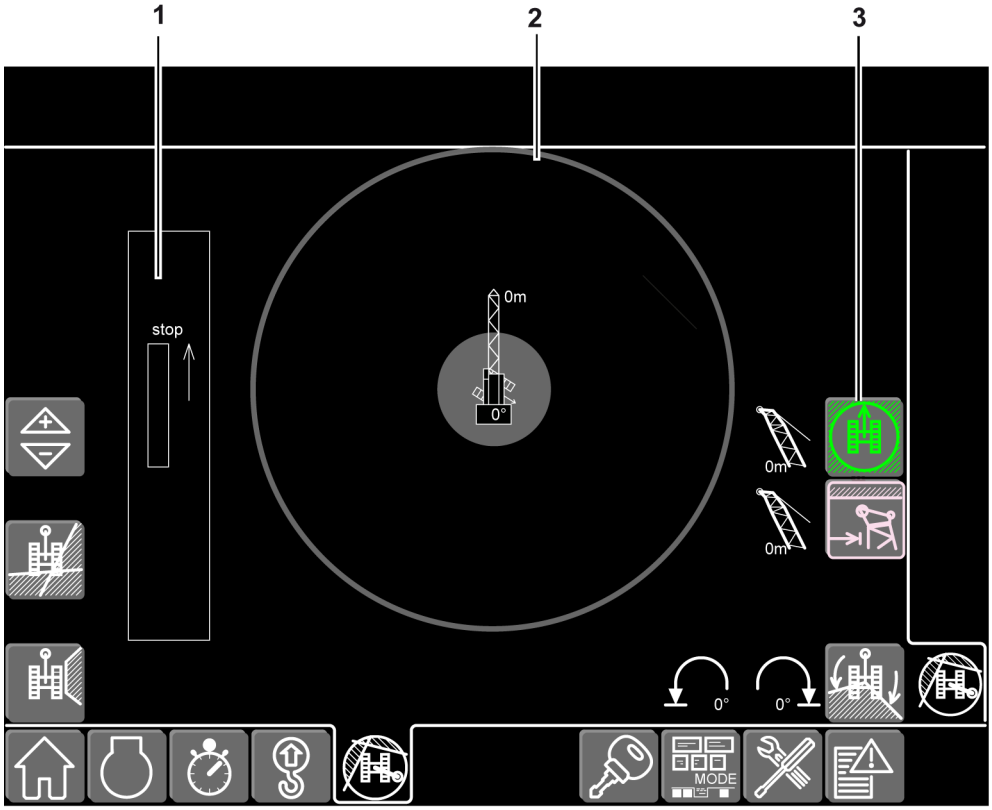

Fig. 2661: Screen Working range limitation - working range limitation - radius limitation maximum radius activated

1 Bar display

2 Programmed radius limitation maximum radius

3 Button *Radius limitation maximum radius*

▶ Press the button *Radius limitation maximum radius* (lit green) for main boom or jib on the monitor.

▷ Radius limitation maximum radius is deactivated for main boom or jib.

LWN/LR.x/V03.01//Auslieferung/2015-06-03/en

copyright by
LIEBHERR

4.34.4 Operating the slewing range limitation

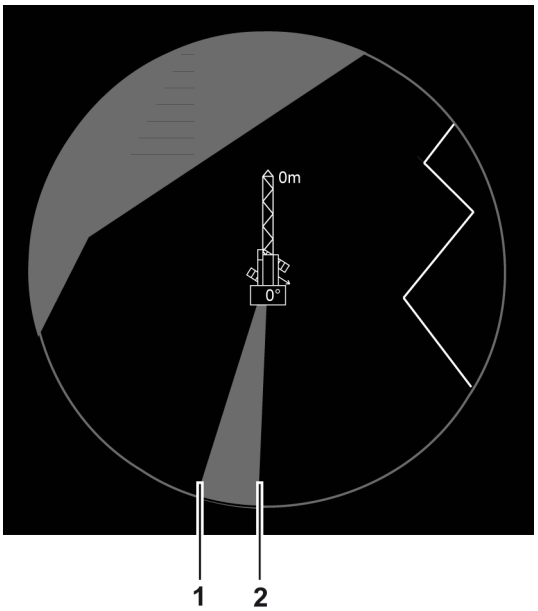

Fig. 2663: Screen section Working range limitation - slewing range limitation

1 Left stop position **2** Right stop position

Programing the slewing range limitation

▶ Press the button *Working range limitation* on the monitor.
▷ Screen *Working range limitation - working range limitation* is displayed.

▶ Press the *Programming* button on the monitor.
▷ The stop positions buttons appear.

▶ Approach left stop position.

▶ Press the button *Slewing range limitation - left stop position* on the monitor.

▶ Approach right stop position.

▶ Press the button *Slewing range limitation - right stop position* on the monitor.
▷ Slewing range limitation is programed.

Activating/deactivating the slewing range limitation

▶ Press the *Slewing range limitation* button on the monitor.

▷ Slewing range limitation is activated.

LWN/LR.x/V03.01//Auslieferung/2015-06-03/en

▶ Press the button *Slewing range limitation* (lit green) on the monitor.
▷ Slewing range limitation is deactivated.

4.34.5 Operating the lifting height limitation

Programming the lifting height limitation

▶ Press the button *Working range limitation* on the monitor.
▷ Screen *Working range limitation - working range limitation* is displayed.

▶ Press the button *Working range limitation - lifting height limitation* on the monitor.
▷ Screen *Working range limitation - lifting height limitation* is displayed.

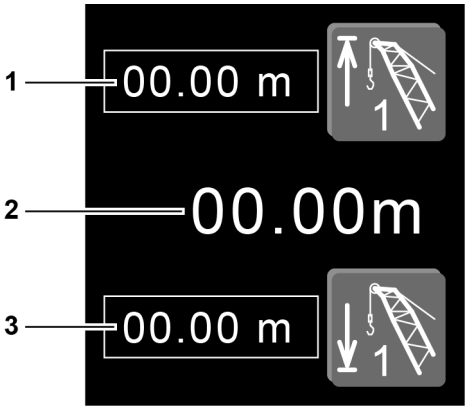

Fig. 2672: Screen section Lifting height limitation winch1

1 Top stop position of winch1
2 Current lifting height of winch1
3 Bottom stop position of winch1

▶ Click Top stop position **1** of winch1 on the monitor and enter the desired value.
or

Press the button *Lifting height limitation winch1 - top stop position* on the monitor.

▷ Current lifting height **2** of winch1 is programed as top stop position **1** of winch1.

▶ Click Bottom stop position **3** of winch1 on the monitor and enter the desired value.
or

Press the button *Lifting height limitation winch1 - bottom stop position* on the monitor.

▷ Current lifting height **2** of winch1 is programed as bottom stop position **3** of winch1.

LWN/LR.x/V03.01//Auslieferung/2015-06-03/en

copyright by
LIEBHERR

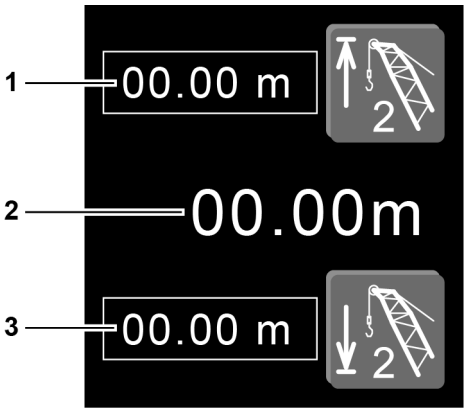

Fig. 2675: Screen section Lifting height limitation winch2

1 Top stop position of winch2
2 Current lifting height of winch2
3 Bottom stop position of winch2

▶ Click Top stop position **1** of winch2 on the monitor and enter the desired value.
or

Press the button *Lifting height limitation winch2 - top stop position* on the monitor.

▷ Current lifting height **2** of winch2 is programed as top stop position **1** of winch2.

▶ Click Bottom stop position **3** of winch2 on the monitor and enter the desired value.
or

Press the button *Lifting height limitation winch2 - bottom stop position* on the monitor.

▷ Current lifting height **2** of winch2 is programed as bottom stop position **3** of winch2.

Activating/deactivating the lifting height limitation

▶ Press the button *Lifting height limitation winch1* on the monitor.
▷ Lifting height limitation of winch1 is activated.

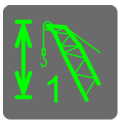

▶ Press the button *Lifting height limitation winch1* (lit green) on the monitor.
▷ Lifting height limitation of winch1 is deactivated.

▶ Press the button *Lifting height limitation winch2* on the monitor.
▷ Lifting height limitation of winch2 is activated.

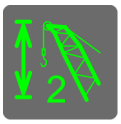

▶ Press the button *Lifting height limitation winch2* (lit green) on the monitor.
▷ Lifting height limitation of winch2 is deactivated.

LWN/LR.x/V03.01//Auslieferung/2015-06-03/en

copyright by
LIEBHERR

4.34.6 Cancelling the stop after crawler operation

Movements of the swing and the booms are stopped after operating the crawler.

▶ Press the button *Working range limitation* on the monitor (blinks yellow).
▷ Screen *Working range limitation - working range limitation* is displayed.

▶ Press the button *Program* (lit red) on the monitor.
▷ The stop positions buttons appear.

If the stop positions are still valid despite moving the machine:
▶ Press the button *Program* (lit red) on the monitor again.

▷ The button *Programming* is lit green.
▷ Working range limitations are confirmed.
▷ Movements of the swing and the booms are cleared.

If the stop positions are no longer valid because of moving the machine:
▶ Reprogram the working range limitations.

4.34.7 Resetting limitations

▶ Press the button *Working range limitation* on the monitor.
▷ Screen *Working range limitation - working range limitation* is displayed.

▶ Press the *Programming* button on the monitor.
▷ The stop positions buttons appear.

▶ Press the *Reset limitations* button on the monitor for more than 1 second.
▷ All limitations are reset.

LWN/LR.x/V03.01//Auslieferung/2015-06-03/en

copyright by
LIEBHERR

4.35 Rope reeving winch

WARNING
Improper use of rope reeving winch!
Severe injuries, damage to machine.

- ▶ Only use rope reeving winch to reeve ropes.
- ▶ Do not install any swivels in the reeving winch rope.

4.35.1 Setting the rope reeving winch to free-wheel

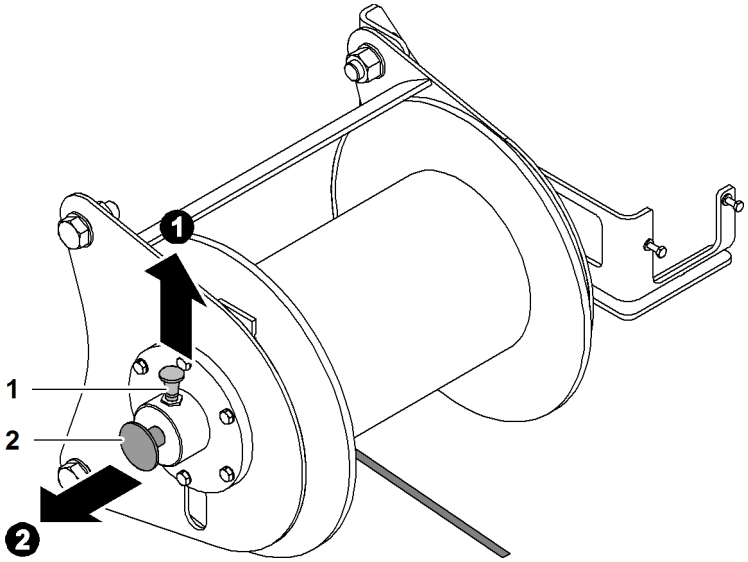

Fig. 2688: Setting the rope reeving winch to free-wheel

1 Securing element **2** Axis

Note

Liebherr recommends:
- ▶ To facilitate extension of the axis **2**: Move rope reeving winch forward and backward by hand.

- ▶ Pull up securing element **1** and pull out axis **2** at the same time.
  - ▷ Rope reeving winch is set to free-fall.

LWN/LR.x/V03.01//Auslieferung/2015-06-03/en

copyright by
LIEBHERR

4.35.2 Deactivating rope reeving winch free-fall

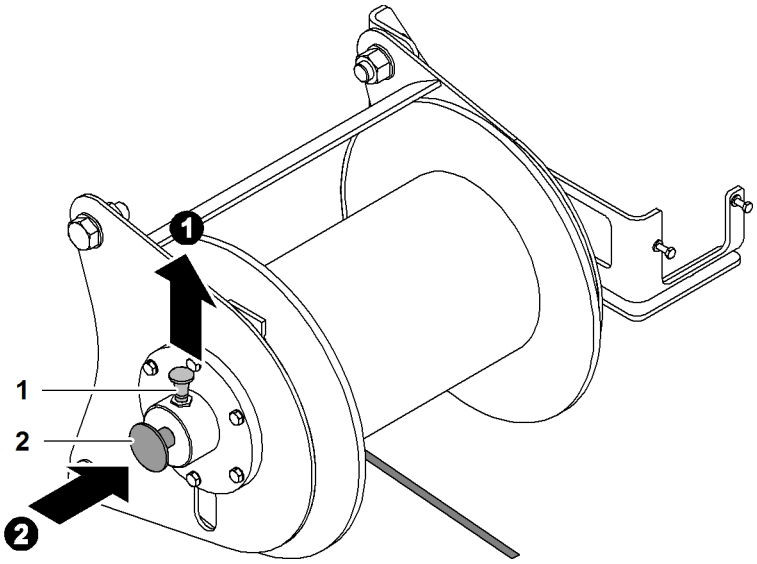

Fig. 2689: Deactivating rope reeving winch free-fall

1 Securing element **2** Axis

Note

Liebherr recommends:

▶ To facilitate pushing in the axis **2**: Move rope reeving winch forward and backward by hand.

▶ Pull up securing element **1** and push in axis **2** at the same time.
▷ Rope reeving winch free-wheel is deactivated.

4.35.3 Reeving the rope of the rope reeving winch

WARNING
Do not stand in close proximity to the rope reeving winch and the rope of the rope reeving winch!
Severe injury.

▶ Make sure that nobody is located in the danger zone.

▶ Leave danger zone.

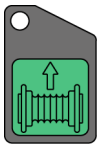

▶ Press and hold the *Rope reeving winch* button on control panel *X11*.
▷ Rope of rope reeving winch is reeved.

▶ Press the *Rope reeving winch* button on control panel *X11*.
▷ Rope reeving winch is deactivated.

LWN/LR.x/V03.01//Auslieferung/2015-06-03/en

copyright by LIEBHERR

4.36 Tagline winch*

WARNING
Use of the tagline winch requires a special mode of operation!
Severe injuries, damage to machine.

▶ For more information regarding special modes of operation: Contact Liebherr after sales service.

WARNING
The tagline winch must not be used as an auxiliary winch!
The tagline winch fixed-caliber disc brake is released in case of an emergency stop or after switching off the diesel engine.
Severe injuries, damage to machine.

▶ Only use the tagline winch for its intended purpose.

WARNING
Inadmissible pulling up of safety lever with activated tagline winch!
Tagline winch is not addressed and automatically switches to free-wheel.
Severe injuries, damage to machine.

▶ Only work with tagline winch when safety lever is lowered.

4.36.1 Putting the tagline winch into operation

▶ Unwind tagline rope manually from the tagline winch.

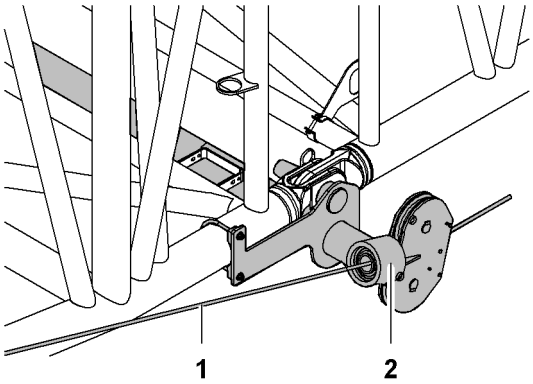

Fig. 2691: Feed tagline through rope bracket

1 Tagline winch rope **2** Rope bracket

▶ Feed tagline winch rope **1** through rope bracket **2**.

NOTICE
Incorrect use of the machine with tagline winch switched off and tagline winch rope **1** attached to the rigging material!
Damage to the tagline winch.

When the tagline winch rope **1** is attached to the rigging material:
▶ Only operate machine with tagline winch switched on.

LWN/LR.x/V03.01//Auslieferung/2015-06-03/en

copyright by LIEBHERR

- Attach tagline winch rope **1** properly to rigging material.
- Check the oil level of the tagline winch

4.36.2 Turn the tagline winch on or off

Immediately after the tagline winch is switched on, the tagline is wound up and tensioned with the preset constant tension (For more information see: 4.36.3 Set the constant tension of the tagline winch, page 999) .

CAUTION
The rigging material may suddenly swing out when the tagline winch is switched on!

- As the tagline winch is switched on and while it is being used, ensure that no one is near the rigging material or between the tagline winch and the rigging material.
- Watch the reaction of the rigging material when the tagline winch is switched on.

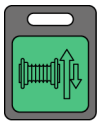

- Press the *Tagline* button on control panel *X23*.
  ▷ The tagline winch is switched on.

- Press the *Tagline* button on control panel *X23* again.
  ▷ The tagline winch is switched off.

4.36.3 Set the constant tension of the tagline winch

The constant tension is at least 2 kN (450 lb_f) and no more than 50% of the maximum pull force.

Increasing the constant pull of the tagline winch

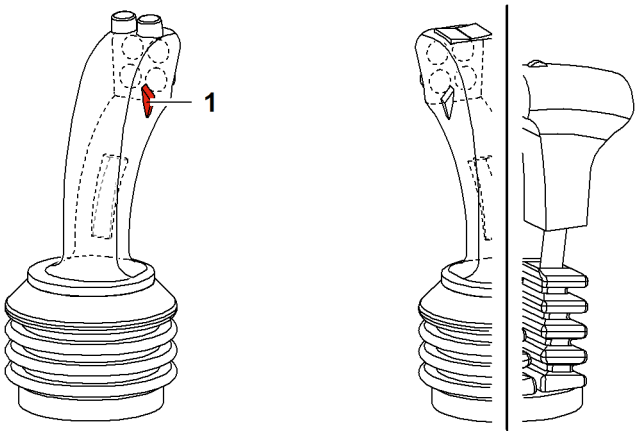

Fig. 2693: Increasing the constant pull of the tagline winch

1 Rotary control knob *Constant pull tagline winch*

- Turn up rotary control knob *Constant pull tagline winch* **1** on left multi-directional control lever.

LWN/LR.x/V03.01//Auslieferung/2015-06-03/en

copyright by LIEBHERR

▷ The constant tension of the tagline winch increases to a maximum of 50% of the maximum pull force.

Reducing the constant pull of the tagline winch

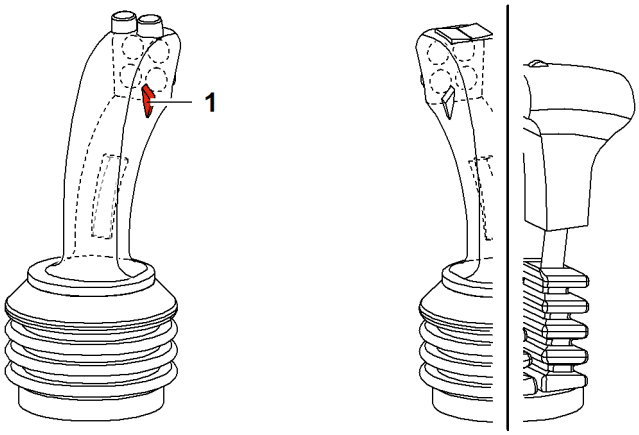

Fig. 2694: Reducing the constant pull of the tagline winch

1 Rotary control knob *Constant pull tagline winch*

▶ Turn down rotary control knob *Constant pull tagline winch* **1** on left multi-directional control lever.
▷ The constant pull of the tagline winch reduces to a minimum of the minimum pull force.

4.36.4 Setting the pull force of the tagline winch

The *tagline winch* foot pedal is used to adjust the pull force of the tagline winch between the preset constant pull and the maximum pull force.

LWN/LR.x/V03.01//Auslieferung/2015-06-03/en

copyright by
LIEBHERR

Increasing the pull force of the tagline winch

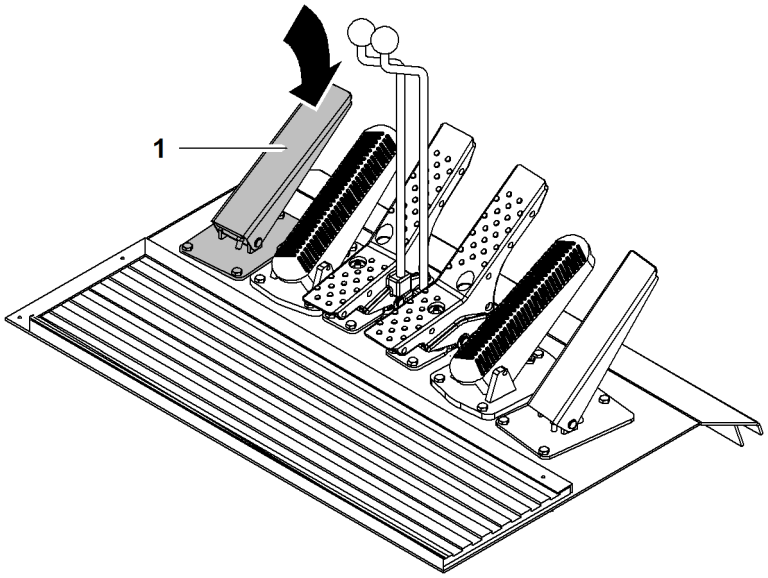

Fig. 2695: Increasing the pull force of the tagline winch

1 Foot pedal for *tagline winch*

▶ Press the foot pedal *of the tagline winch* **1** forwards.
▷ Pull force of tagline winch is increased.

Decreasing the pull force of the tagline winch

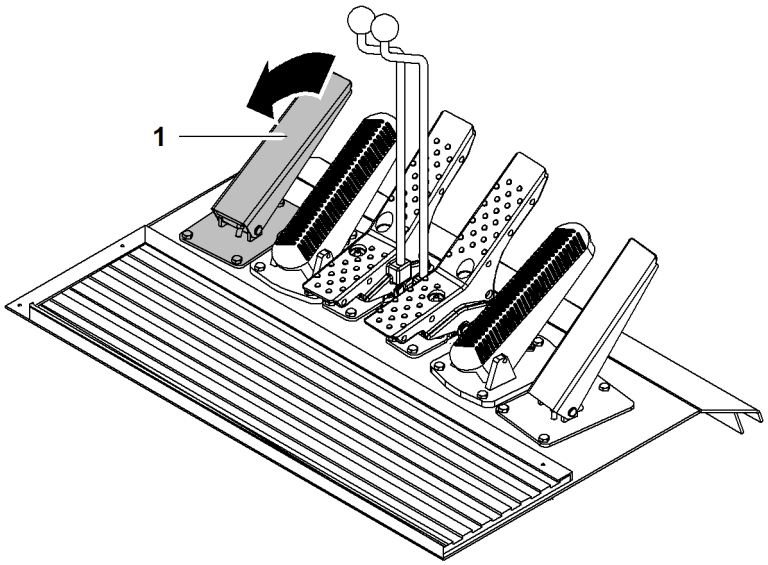

Fig. 2696: Decreasing the pull force of the tagline winch

1 Foot pedal for *tagline winch*

▶ Let the foot pedal *of the tagline winch* **1** move backwards.
▷ Pull force of tagline winch is reduced.

LWN/LR.x/V03.01//Auslieferung/2015-06-03/en

copyright by
LIEBHERR

4.36.5 Select maximum pull force of the tagline winch

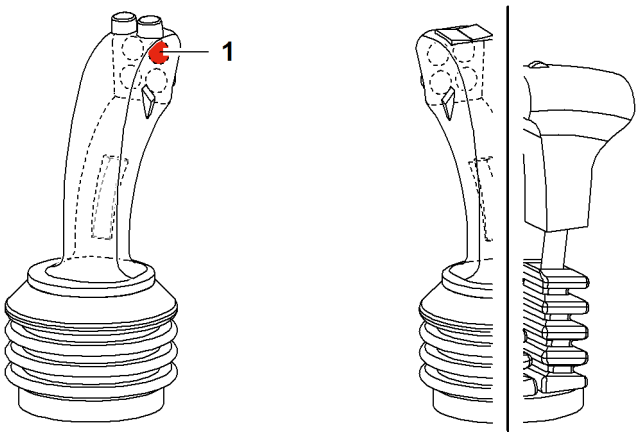

Fig. 2697: Select maximum pull force of the tagline winch

1 Button *Maximum pull force tagline winch*

▶ Press and hold the button *Maximum pull force tagline winch* **1** on the left multi-directional control lever.
▷ Tagline winch winds up the tagline with maximum pull force.

▶ Release button *Maximum pull force tagline winch* **1**.
▷ Tagline winch winds up the tagline with set constant pull.

4.36.6 Turning tagline winch free-wheel on or off

The free-wheel unwinds the tagline from the tagline winch without braking.

Free-wheel serves for fast release or slewing off of the rigging material.

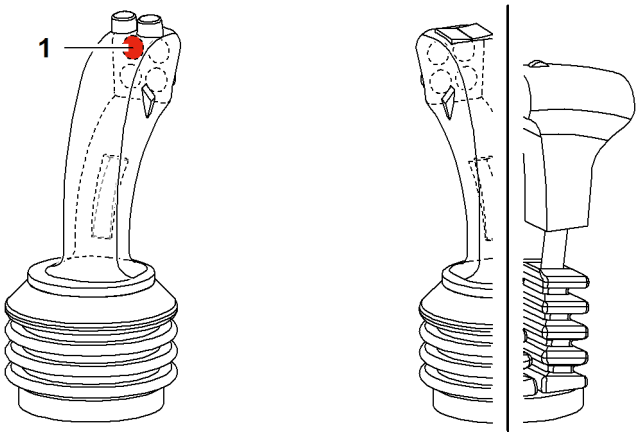

Fig. 2698: Turning tagline winch free-wheel on or off

1 Button *Tagline winch free-wheel*

▶ Press and hold the button *Tagline winch free-wheel* **1** on the left multi-directional control lever.
▷ Tagline winch is freewheeling.

LWN/LR.x/V03.01/Auslieferung/2015-06-03/en

copyright by
LIEBHERR

NOTICE
Freewheeling must not be switched off when the tagline winch is rotating!
Damage to the tagline winch.

▶ Do not switch freewheeling off until the tagline winch has stopped moving.

▶ Let go of the button *Tagline winch free-wheel* **1**.
▷ Tagline winch winds up the tagline with constant pull.

LWN/LR.x/V03.01//Auslieferung/2015-06-03/en

copyright by
LIEBHERR

4.37 Luffing jib luffing winch as auxiliary winch*

DANGER
Inadmissible rope on luffing jib luffing winch!
Load breakaway.

▶ Make sure that the correct rope for the respective application of the luffing jib luffing winch is used.

Note

Liebherr recommends:
▶ Only use original Liebherr ropes.

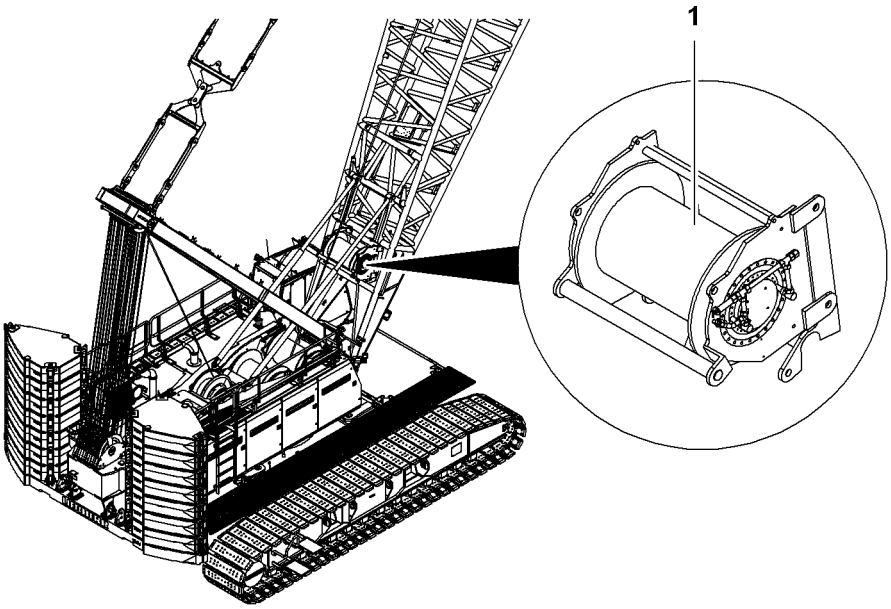

Fig. 2699: Luffing jib luffing winch as auxiliary winch

1 Jib luffing winch

4.37.1 Use as jib luffing winch

Ensure that the following conditions are satisfied:
- ❑ Boom configuration 4 "Main boom with luffing jib" is selected.
- ❑ Rope on jib luffing winch is not **rotation-resistant**.
- ❑ Rope on jib luffing winch complies with break force.
- ❑ Rope on jib luffing winch has the required rope safety.
- ❑ Rope on jib luffing winch complies with standard **ISO 4308** or **ANSI B30.5**.
- ❑ Rope on jib luffing winch has a diameter of 20 mm (0.79“ in).
- ❑ Rope fixing point is located on A-frame2.

LWN/LR.x/V03.01//Auslieferung/2015-06-03/en

copyright by
LIEBHERR

4.37.2 Use as leader height adjusting winch

WARNING
Use of the jib luffing winch as leader height adjusting winch constitutes a special operating mode!
Severe injuries, damage to machine.

▶ For more information regarding special modes: Contact Liebherr customer service.

Make sure the following prerequisites are met:
- ❑ Boom configuration 1 "Main boom" is selected.
- ❑ Control panel *X25* for leader* is plugged in.
- ❑ Rope on jib luffing winch is not **rotation-resistant**.
- ❑ Rope on jib luffing winch complies with break force.
- ❑ Rope on jib luffing winch has the required degree of rope safety.
- ❑ Rope on jib luffing winch complies with standard **ISO 4308** or **ANSI B30.5**.
- ❑ Rope on jib luffing winch has a diameter of 20 mm (0.79“ in).
- ❑ Rope fixing point is located on the leader.
- ❑ No swivel is attached to rope fixing point.

▶ Use jib luffing winch as leader height adjusting winch.

4.37.3 Use as auxiliary winch

DANGER
Improper use!
Damage to machine.

▶ Observe proper use.

Ensure that the following conditions are satisfied:
- ❑ A boom configuration **except for** boom configuration 4 “"Luffing jib” is selected.
- ❑ Control panel *X25* for leader* is unplugged.
- ❑ Retrofitting kit “Third hoist limit switch” is mounted to boom head.
- ❑ 3 rope windings limit switch is mounted to jib luffing winch.
- ❑ Rope on jib luffing winch is **rotation-resistant**.
- ❑ Rope on jib luffing winch complies with break force.
- ❑ Rope on jib luffing winch has the required rope safety.
- ❑ Rope on jib luffing winch complies with standard **ISO 4308** or **ANSI B30.5**.
- ❑ Rope on jib luffing winch has a diameter of 20 mm (0.79“ in).

The retrofit kit “jib luffing winch as auxiliary winch” consists of:

- 3-rope windings limit switch
- Hydraulic pressure limiter
- Pocket lock (with rope fixing point)
- Cross strap

The retrofitting kit “Third hoist limit switch” is required to operate the jib luffing winch as an auxiliary winch.

▶ Use jib luffing winch as auxiliary winch.

LWN/LR.x/V03.01//Auslieferung/2015-06-03/en

copyright by
LIEBHERR

4.38 Sensitive hoisting*

The “Sensitive hoisting” function allows loads to be gently hoisted.

The function applies the following safety limitations to the crane operation:
– Winch 1 and Winch 2 are limited to a maximum speed of 30 m/min (98‘ 5“ ft-in/min).
– The load chart values are reduced by 50%.

The load chart that is called up on-screen is not changed and displays the standard lifting capacities.

4.38.1 Turning the function sensitive lift on or off

Ensure that the following conditions are fulfilled:
❑ The gate valve*Free-fall mode* is located in the “OFF” position.

▶ Press the button *Sensitive lift* on control panel *X23*.

▷ Sensitive lift is activated.
▷ The symbol *Sensitive lift* appears on screen:

Fig. 2701: Symbol Sensitive lift

▶ Press the button *Sensitive lift* on control panel *X23* again.
▷ Sensitive lift is deactivated.
▷ The symbol *Sensitive lift* disappears on screen.

4.38.2 Operating sensitive hoisting

Ensure that the following conditions are fulfilled:
❑ Speed level 1 for the swing is set.
❑ Speed level 1 is selected for the boom.

▶ Operate sensitive hoisting.

LWN/LR.x/V03.01//Auslieferung/2015-06-03/en

copyright by
LIEBHERR

4.39 Abseil rescue equipment*

4.39.1 Using abseil rescue equipment

WARNING
Incorrect use of the abseil rescue equipment BORNACK KE 10 St crane!
risk of falling from the cab.

▶ Observe operating manual of the abseil rescue equipment.

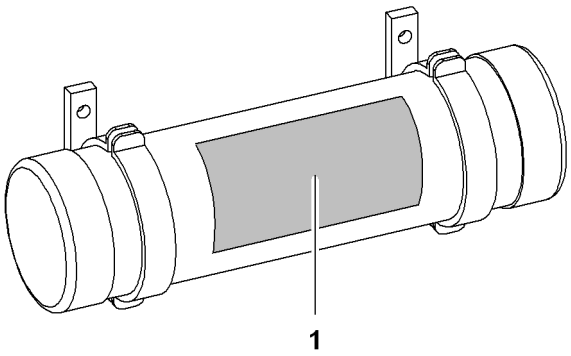

Fig. 2702: Abseil rescue equipment

1 Operating instructions

▶ Read operating manual **1** for abseil rescue equipment.

▶ Take abseil rescue equipment out of storage box.

▶ Put on abseil rescue equipment.

▶ Open the cab door.

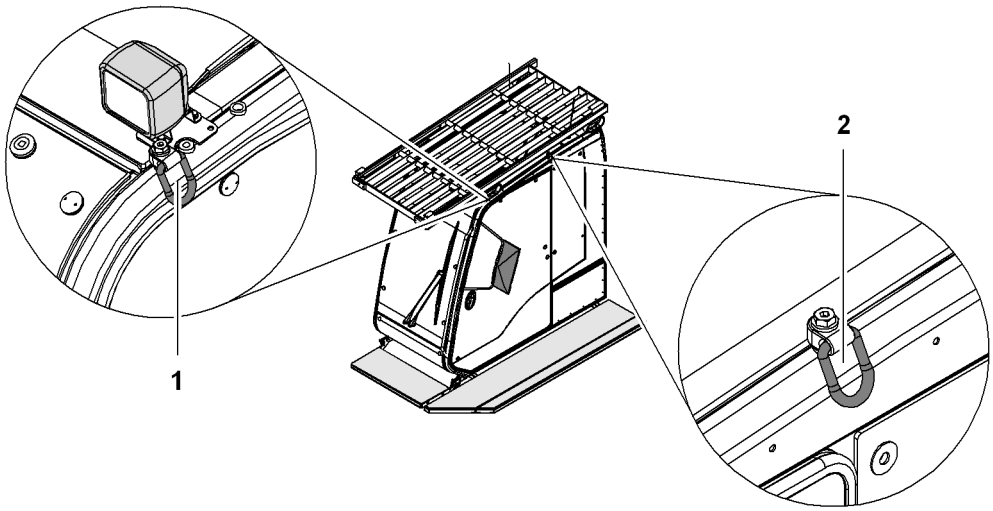

Fig. 2703: Suspension points of abseil rescue equipment

1 Suspension point on cab with cab roof protection guard

2 Suspension point on cab with falling object protection

▶ Attach abseil rescue equipment to suspension point **1, 2**.

LWN/LR.x/V03.01//Auslieferung/2015-06-03/en

copyright by
LIEBHERR

- ▶ Open the fall-arrest chain on the cab door (if one is fitted).
- ▶ Abseil down as described in the operating instructions.

LWN/LR.x/V03.01//Auslieferung/2015-06-03/en

copyright by
LIEBHERR

4.40 Emergency stop

4.40.1 Using emergency stop

DANGER
Machine under extreme stress under load during an emergency stop!
Toppling of machine, structural breakdown.

▶ Only use emergency stop for emergency cut-off of the machine.

DANGER
Unauthorized unlocking of the emergency stop!

▶ Clear up and remedy reason for emergency stop prior to unlocking.

Fig. 2704: Emergency stop on control panel

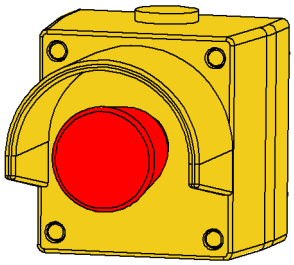

Fig. 2705: Emergency stop in engine compartment

If an emergency stop is triggered while a load is being moved:

▶ Have the multi-disc holding brakes inspected by Liebherr after sales service.

▶ Unlocking the activated emergency stop: gently depress the emergency stop and turn to the right.

▶ Perform visual inspection for damage on steel structure, ropes and pulleys.

After actuating the emergency-stop, the exhaust aftertreatment system is no longer blown out by the compressor. The exhaust aftertreatment system gets clogged through crystallizing of the urea solution.

▶ Contact Liebherr customer service.

LWN/LR.x/V03.01//Auslieferung/2015-06-03/en

copyright by
LIEBHERR

4.41 Shutdown

WARNING
Unauthorised use of machine!
Severe injuries, damage to machine.

▶ When leaving the machine, it must be protected against unauthorised use, vandalism and any possible adverse environmental impact.

When shutting down the machine, distinguish between:
– **Short work interruption**
  • Waiting time or breaks
  • The machine operator remains on site.
– **Long work interruption**
  • Overnight or several days
  • The machine operator leaves the site.

4.41.1 Short work interruption

Machine operator remains in cab

▶ Set down the load.

▶ Pull up safety lever.

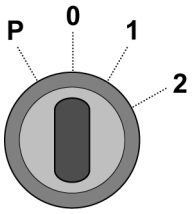

▶ Turn ignition key to position “P” (parked position).
  ▷ Diesel engine is turned off.
  ▷ Litronic control system is switched off.

The following components continue to be supplied with power:
  ▷ Engine compartment lighting
  ▷ Cab lighting
  ▷ Windscreen wiper
  ▷ Horn
  ▷ Radio
  ▷ Heater blower
  ▷ Socket in cabin
  ▷ Cigarette lighter

Machine operator leaves cab

▶ Set down the load.

▶ With derrick operation, lower suspended counterweight/wheeled counterweight carriage on the ground.

▶ Tilt cabin downward all the way.

▶ Pull up safety lever.

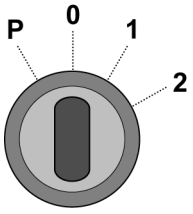

▶ Turn ignition key to position “0”.
  ▷ Diesel engine is switched off.
  ▷ Litronic control system is switched off.

▶ Lock cab after leaving.

LWN/LR.x/V03.01//Auslieferung/2015-06-03/en

copyright by
LIEBHERR

4.41.2 Long work interruption

Ensure that the following conditions are fulfilled:
- ❑ Machine is not obstructing traffic.
- ❑ The place where the machine is left is adequately secured.
- ❑ External energy supply for the safety equipment is secured (e.g. obstacle warning light).

▶ Set down and secure the load.

▶ Place the boom in its parked position.

▶ Draw the empty hook upwards or use the hook fixing point if there is one.

▶ With derrick operation, lower suspended counterweight/wheeled counterweight carriage on the ground.

▶ Tilt cabin downward all the way.

▶ Pull up safety lever.

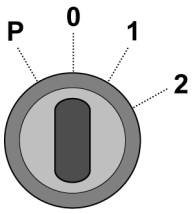

▶ Turn ignition key to position “0”.
- ▷ Diesel engine is switched off.
- ▷ Litronic control system is switched off.

▶ Switch off the auxiliary heating, or program it correctly.

▶ Remove the ignition key and keep it in a safe place.

▶ Lock the cabin and doors to the machinery area.

LWN/LR.x/V03.01//Auslieferung/2015-06-03/en

copyright by
LIEBHERR

4.41.3 Switching off battery main switch

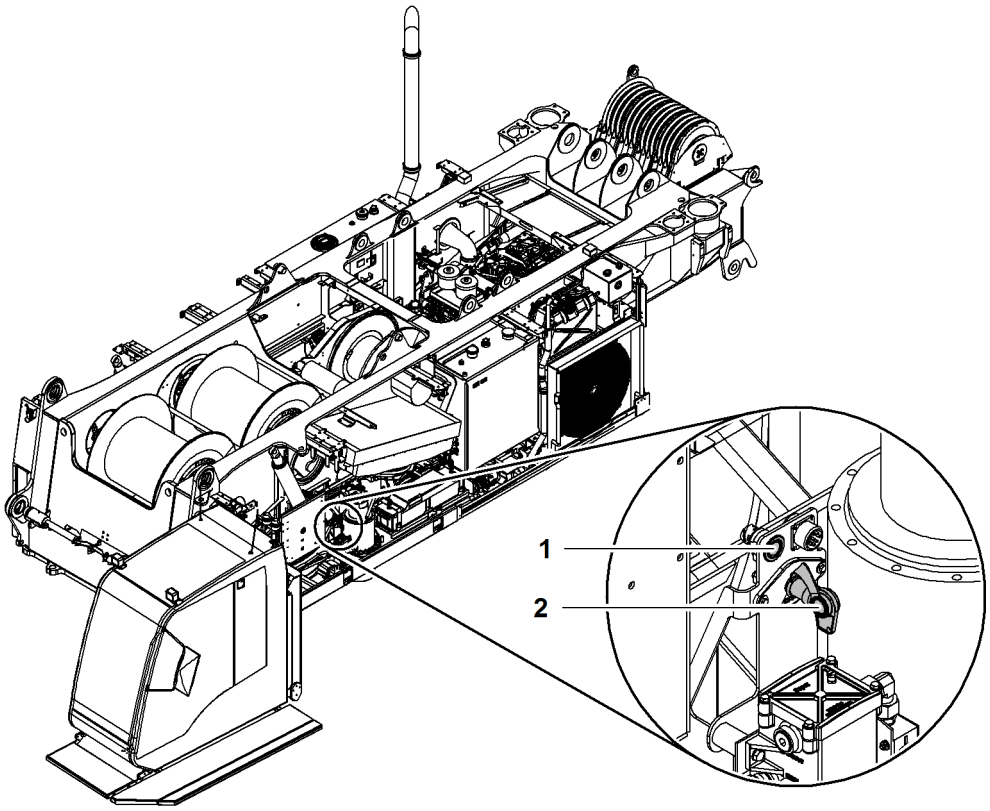

Fig. 2709: Turning off the main battery switch (illustration of principle)

1 Warning light **2** Main battery switch

NOTICE
Incorrect switching off of main battery switch **2**!
Damage to machine

▶ Do not switch off main battery switch **2** until warning light **1** is turned off.

Once warning light **1** is off:
▶ Switching off battery main switch **2**: Turn battery main switch **2** to the left.

LWN/LR.x/V03.01//Auslieferung/2015-06-03/en

copyright by
LIEBHERR

4.42 Hydraulic emergency mode*

Hydraulic emergency mode allows winch 2, the main boom winch and swing to be controlled using an external hydraulic power pack.

4.42.1 Winch 2 emergency mode

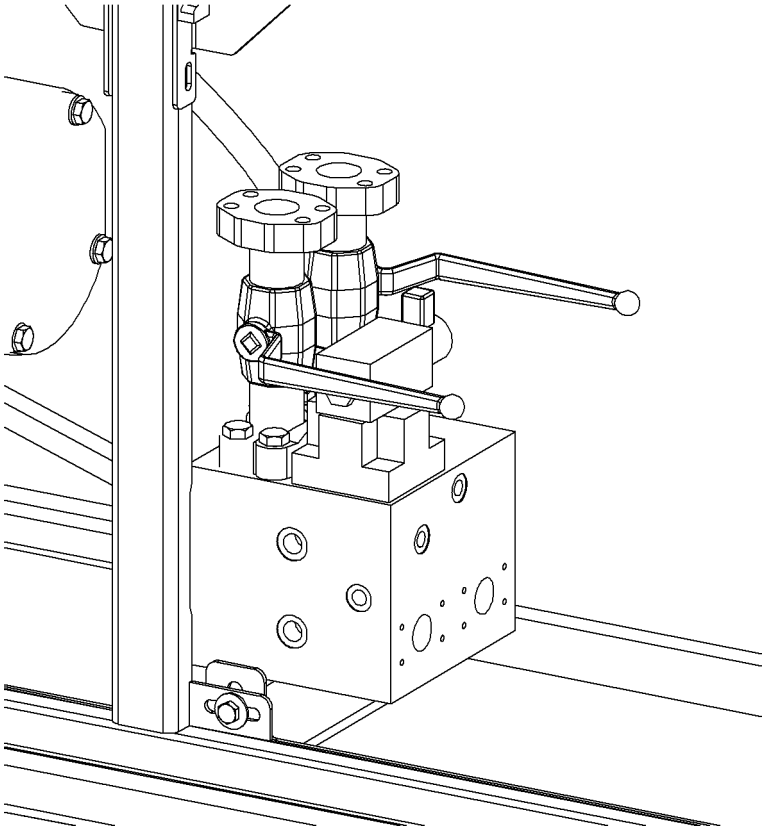

Fig. 2710: High-pressure lines winch 2 gate valves closed

Ensure that the following conditions are fulfilled:
- ❑ *High-pressure lines winch 2* gate valves are closed.
- ❑ An external hydraulic power pack is connected.

LWN/LR.x/V03.01//Auslieferung/2015-06-03/en

copyright by
LIEBHERR

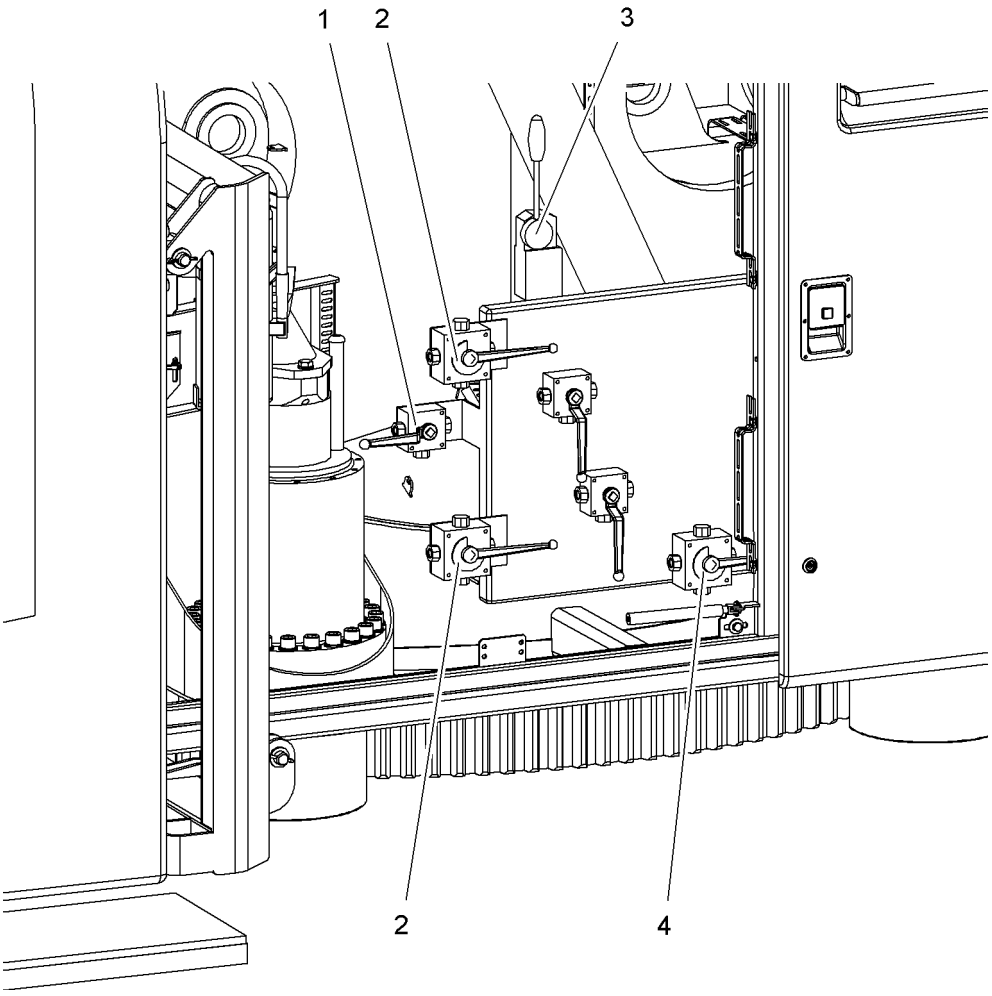

Fig. 2711: Emergency mode gate valves in “Control winch 2” position

1	*Brake winch 2* gate valve	**3**	Control lever
2	*Function selection high-pressure lines* gate valve (2x)	**4**	*Function selection brake* gate valves

▶ Turn *Function selection High-pressure lines* gate valves **2** to “Control winch 2” position.

▶ Turn *Function selection brake* gate valves **4** to “Control winch 2” position.

▶ Turn *Brake winch 2* gate valve **1** to “Control winch 2” position.

▶ Move the control lever **3** to the right.
▷ The load hook/pulley block rises.

▶ Move the control lever **3** to the left.
▷ The load hook/pulley block lowers.

LWN/LR.x/V03.01//Auslieferung/2015-06-03/en

copyright by
LIEBHERR

4.42.2 Main boom adjusting winch emergency mode

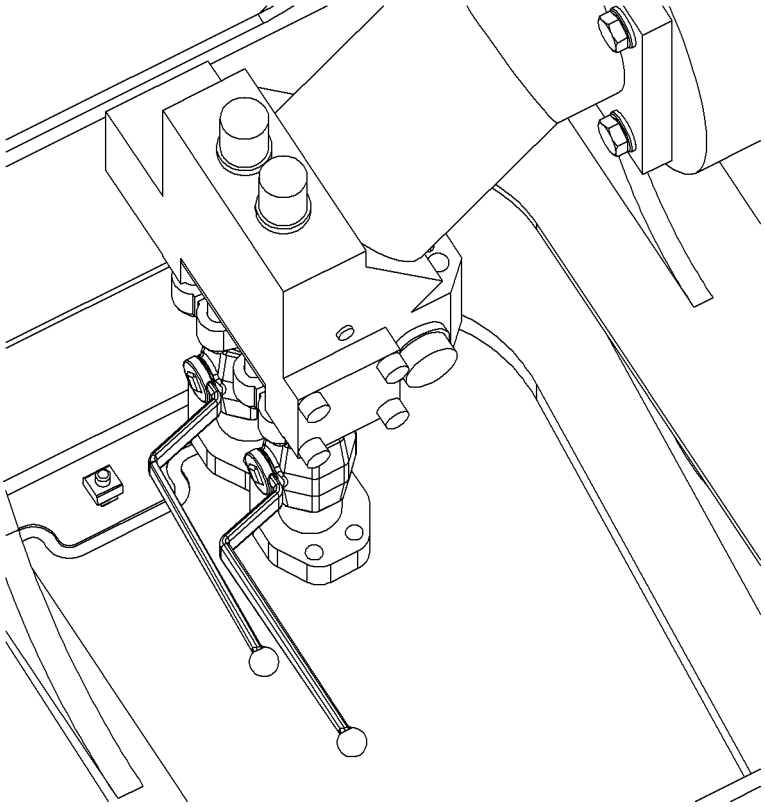

Fig. 2712: High-pressure lines main boom adjusting winch gate valves closed

Ensure that the following conditions are fulfilled:
- ❑ *High-pressure lines main boom adjusting winch* gate valves are closed.
- ❑ An external hydraulic power pack is connected.

LWN/LR.x/V03.01//Auslieferung/2015-06-03/en

copyright by
LIEBHERR

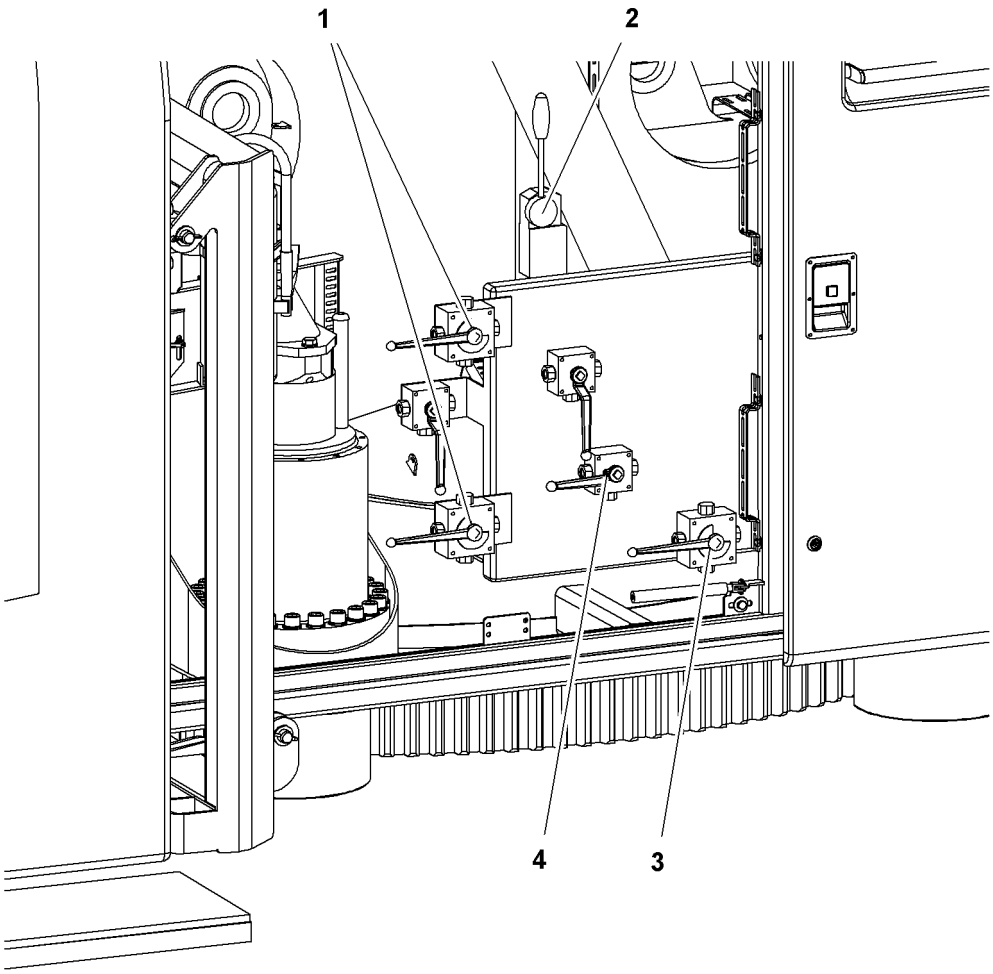

Fig. 2713: Emergency mode gate valves in “Control main boom winch” position

1	*Function selection high-pressure lines* gate valve (2x)	**3**	*Function selection brake* gate valves
2	Control lever	**4**	,*Brake main boom winch* gate valve

- ▶ Turn *Function selection High-pressure lines* gate valves **1** to “Control main boom winch” position.
- ▶ Turn *Function selection brake* gate valves **3** to “Control main boom winch” position.
- ▶ Turn *Brake main boom adjusting winch* gate valve **4** to “Control main boom winch” position.
- ▶ Move the control lever **2** to the right.
  ▷ The main boom rises.
- ▶ Move the control lever **2** to the left.
  ▷ The main boom lowers.

4.42.3 Swing emergency mode

Swing emergency mode controls a single swing gear. If a second swing gear is present, only the brakes are released.

LWN/LR.x/V03.01//Auslieferung/2015-06-03/en

copyright by LIEBHERR

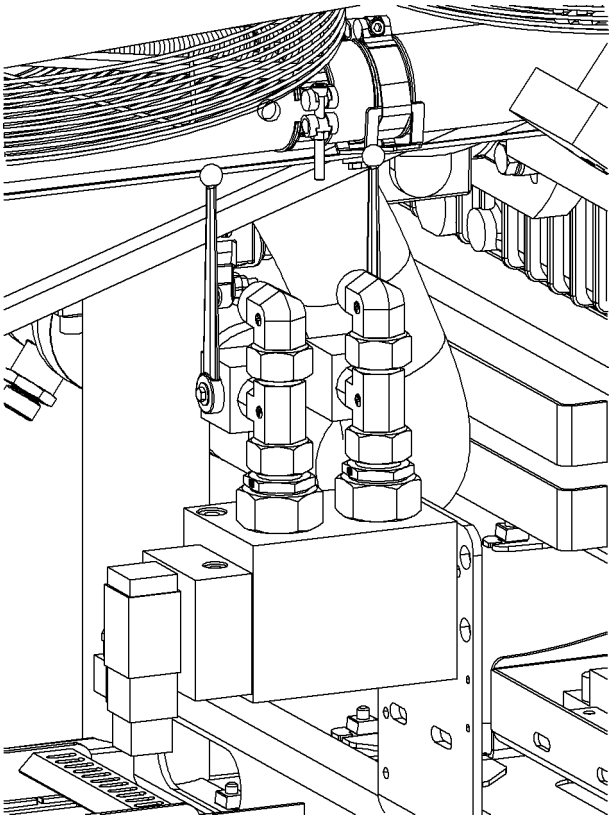

Fig. 2714: Swing high-pressure lines gate valves closed

Ensure that the following conditions are fulfilled:
- ❑ *Swing high-pressure lines* gate valves are closed.
- ❑ An external hydraulic power pack is connected.

LWN/LR.x/V03.01//Auslieferung/2015-06-03/en

copyright by
LIEBHERR

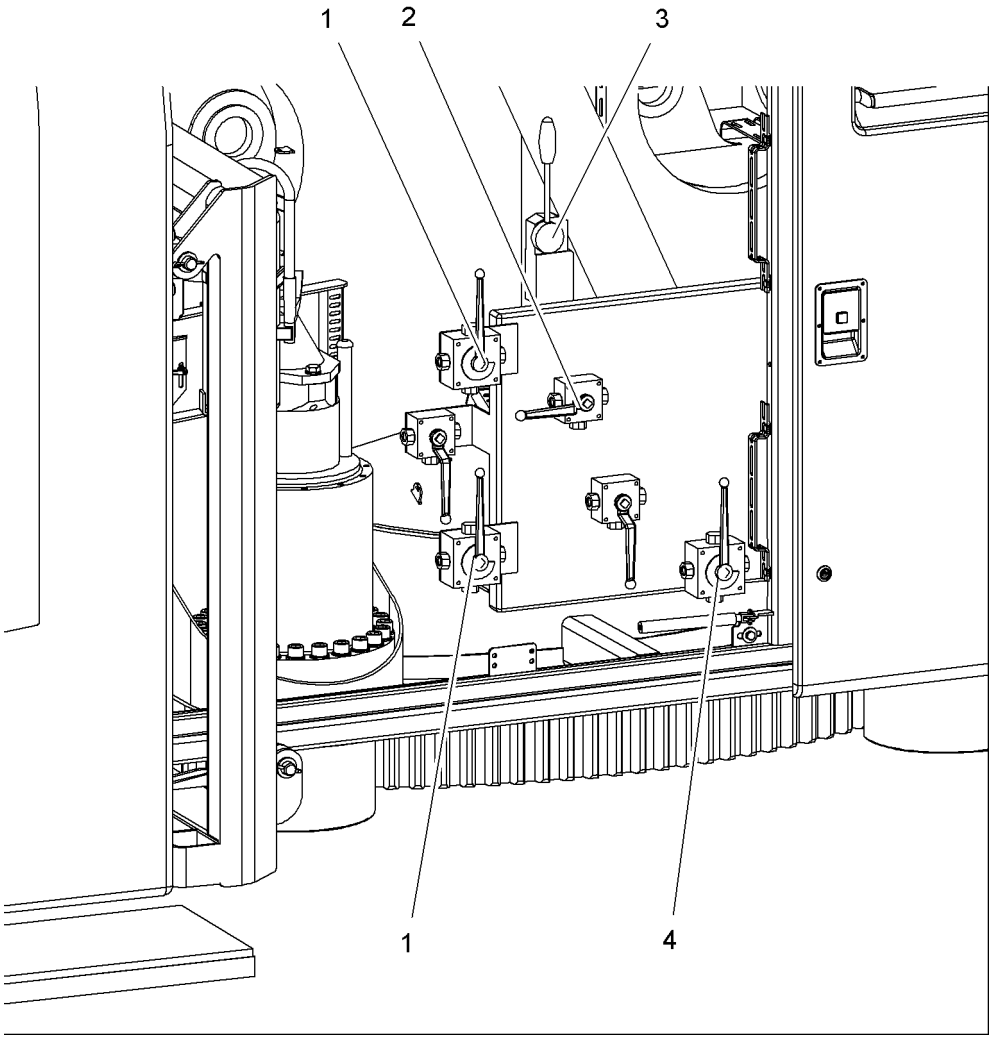

Fig. 2715: Emergency mode gate valves in “Control swing” position

1	*Function selection high-pressure lines* gate valve (2x)	**3**	Control lever
2	*Brake swing* gate valve	**4**	*Function selection brake* gate valves

- ▶ Turn *Function selection High-pressure lines* gate valves **1** to “Control swing” position.
- ▶ Turn *Function selection brake* gate valves **4** to “Control swing” position.
- ▶ Turn *Brake swing* gate valve **2** to “Control swing” position.
- ▶ Move the control lever **3** to the right.
  ▷ Uppercarriage turns to the left.
- ▶ Move the control lever **3** to the left.
  ▷ Uppercarriage turns to the right.

LWN/LR.x/V03.01//Auslieferung/2015-06-03/en

copyright by
LIEBHERR

4.43 Emergency operation control*

Should a fault occur that causes the Litronic control system to fail, the emergency operation controller allows the machine to be moved out of the danger area.

WARNING
Unauthorized or improper use of the emergency operation controller!

- ▶ Do not use the emergency operation controller unless an emergency has arisen.
- ▶ Cordon off a large area around the danger zone.
- ▶ Employ a signalman to direct the movements.
- ▶ Exercise the utmost care when using the emergency operation controller.
- ▶ Remember that all safety features are bypassed and will not work.

In the case of long booms and when operating the swing, remember that control of the functions is not integrated.

All speeds are reduced by two thirds. Speeds cannot be adjusted on the control panel except for RPM.

During emergency operation, continue to operate the crawlers using the foot pedals in the cabin.

NOTICE
Unauthorized use of the emergency operation controller when a wheeled counter-weight carriage is attached!
Damage to the machine and the counterweight carriage.

- ▶ Never use emergency operation when a wheeled counterweight carriage is attached.

4.43.1 Operating the emergency control

- ▶ Switching off the machine: turn ignition key to position “0”.
- ▶ Open the front most left uppercarriage door.
- ▶ Plug in and lock emergency control system.

WARNING
Unauthorized use of the emergency operation controller!
Severe injury.

- ▶ Only operate emergency control in the cabin.

- ▶ Sit in the cabin.

The status display (LED) of the emergency control system lights up as soon as the ignition is switched on.

- ▶ Start the diesel engine using the ignition key.
- ▶ Lower control safety lever in cabin.
- ▶ Operate the emergency control.

LWN/LR.x/V03.01//Auslieferung/2015-06-03/en

copyright by LIEBHERR

When the machine has been moved out of the danger area:

- ▶ Switch off machine.
- ▶ Unplug emergency control system.
- ▶ Close front left uppercarriage door.

LWN/LR.x/V03.01//Auslieferung/2015-06-03/en

copyright by
LIEBHERR

Operational faults, diagnosis 5

5 Operational faults, diagnosis

5 Operational faults, diagnosis

The chapter **Operation errors, diagnosis** deals with the following issues:
– Operation errors of the machine and the corresponding diagnosis

5.1 Malfunctions

5.1.1 Identifying faults

Faults are very often caused by incorrect operation or inadequare maintenance of the machine.

NOTICE
Improper procedure with occurring error message!
Damage to machine.

In case of an error message:
▶ Concentrate on work process and continue it while permanently monitoring until risk-free stopping of all machine movements is possible.

Once all machine movements have stopped:
▶ remedy all error causes and acknowledge error messages. Acknowledging the error messages alone will not remedy the causes of the errors.

▶ Observe all symbols amd error messages on the monitor.

▶ Observe all acoustic warning sugans from the monitor.

5.1.2 Error displays on monitor

NOTICE
Serious engine error messages are ignored!
Damage to the diesel engine.

If serious engine error message is displayed:
▶ Switch off diesel engine.

Symbol/status	Cause	Remedy
blinks red	Admissible load moment was exceeded.	Reduce load moment.

LWN/LR.x/V03.01//Auslieferung/2015-06-03/en

copyright by LIEBHERR

Symbol/status	Cause	Remedy
lit red	Machine may topple backwards due to insufficient radius.	Increase radius.
blinks red	Error in the electrical system.	Contact Liebherr customer service.
blinks red	Serious engine error has occurred.	Perform troubleshooting and remedy error (For more information see: Rectifying grave engine error message, page 1028) .
lit yellow	General engine error has occurred.	Perform troubleshooting and remedy error (For more information see: Rectifying general engine error messages, page 1028) .
blinks red	Data recording error.	Contact Liebherr customer service.
blinks red	Wind speed too high.	Lay down boom.
lit red	Danger of toppling.	Reduce radius.
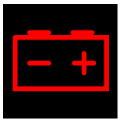 blinks red	Battery is not charging.	Contact Liebherr customer service.
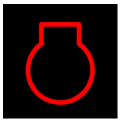 blinks red	Diesel engine RPM is too high.	Reduce RPM.

LWN/LR.x/V03.01//Auslieferung/2015-06-03/en

copyright by LIEBHERR

Symbol/status	Cause	Remedy
lit yellow	Fill level of urea tank is less than 10 % of the maximum filling capacity or error in exhaust aftertreatment system.	Fill in urea solution or contact Liebherr customer service.
lit yellow lit yellow	Fill level of urea tank is less than 5 % of the maximum filling capacity or error in exhaust aftertreatment system.	Fill in urea solution or contact Liebherr customer service.
lit yellow blinks red	Fill level of urea tank is less than 2.5 % of the maximum filling capacity or error in exhaust aftertreatment system.	Fill in urea solution or contact Liebherr customer service.
blinks red blinks red	Fill level of urea tank is less than 0 % of the maximum filling capacity or error in exhaust aftertreatment system.	Fill in urea solution or contact Liebherr customer service.
blinks red	Hydraulic oil temperature is too high.	Contact Liebherr customer service.
blinks red	Temperature of diesel engine coolant is too high.	Contact Liebherr customer service.

LWN/LR.x/V03.01//Auslieferung/2015-06-03/en

copyright by LIEBHERR

Symbol/status	Cause	Remedy
blinks red	Temperature of diesel engine charge air is too high.	Contact Liebherr customer service.
blinks red	Fill level of fuel tank is less than 5 % of the maximum filling capacity.	Fill in fuel.
blinks red	Pressure of diesel engine lubrication oil is too low.	Contact Liebherr customer service.
blinks red	Fill level of diesel engine lubrication oil is too low.	Fill in lubrication oil.
blinks red	Fill level of diesel engine lubrication oil is too high.	Drain lubrication oil.
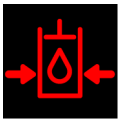 blinks red	Supply pressure is too low.	Contact Liebherr customer service.
blinks red	Feed pressure on winch1 is too low.	Contact Liebherr customer service.
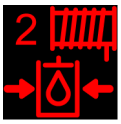 blinks red	Feed pressure on winch2 is too low.	Contact Liebherr customer service.
blinks red	Temperature of gearbox oil in the distribution gearbox is too high.	Contact Liebherr customer service.

LWN/LR.x/V03.01//Auslieferung/2015-06-03/en

copyright by LIEBHERR

Symbol/status	Cause	Remedy
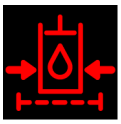 blinks red	Supply pressure oil filter does not work correctly.	Contact Liebherr customer service.
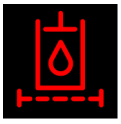 blinks red	Hydraulic oil filter does not work correctly.	Contact Liebherr customer service.
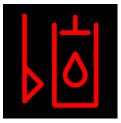 blinks red	Fill level of hydraulic oil tank is too low.	Fill in hydraulic oil.
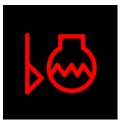 blinks red	Coolant fill level is too low.	Fill in coolant.
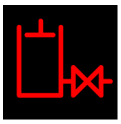 blinks red	*Hydraulic oil tank* gate valve is closed.	Ensure there is no danger. Open *hydraulic oil tank* gate valve.
blinks red	Fuel pressure is too low or too high.	Contact Liebherr customer service.
blinks red	Fuel temperature is too high.	Contact Liebherr customer service.
blinks red	Water in the fuel filter.	Drain water into condensation trap.
blinks red	Charge air filter does not work correctly.	Contact Liebherr customer service.

Tab. 378: Error displays

LWN/LR.x/V03.01//Auslieferung/2015-06-03/en

copyright by LIEBHERR

5.1.3 Troubleshooting

Rectifying grave engine error message

The cause of the error appears either on the *Engine* screen or on the *Error messages* screen.

Possible error causes are:
– Coolant temperature > 104 °C (219 °F)
– Charge air temperature > 80 °C (176 °F)
– Fuel temperature > 90 °C (194 °F)
– Oil pressure safety curve undercut
– Coolant level too low
– Hydraulic oil level too low
– Water in fuel
– Problem with the high-pressure control
– Fuel pressure too low
– Fuel rail pressure too high

The speeds of these functions and movements are reduced by 50 % in the event of an error message:
– Lift winch1 and winch2
– Raise feed
– Rotary drive
– Crawler
– Hammer
– Grab
– Cutting wheels

▶ Stop the dangerous movement.

▶ Place the load on the ground.

▶ Switch off diesel engine.

▶ Determine and rectify cause of error.

If the cause of the error cannot be determined and rectified:
▶ Contact Liebherr customer service.

Rectifying general engine error messages

▶ Carry out troubleshooting in the Litronic® testing system.

▶ Determine and rectify cause of error.

If the cause of the error cannot be determined and rectified:
▶ Contact Liebherr customer service.

LWN/LR.x/V03.01//Auslieferung/2015-06-03/en

copyright by
LIEBHERR

5.2 Litronic testing system

5.2.1 Litronic testing system overview

WARNING
Unauthorized changes to Litronic testing system!
Damage to machine.

▶ Only have adjustment values or correction values changed by Liebherr service personnel.

The Litronic testing system is an extensive diagnosis tool and service tool available on the monitor, on a service notebook or via a modem connection (if available).
The Litronic testing system serves to view the inputs and outputs, markers, internal variables and statuses.

The Litronic® testing system provides the following functions:
- Display of the ID number of the installed software and the software version
- Display of the inputs and outputs of the modules with comment text
- Display of the internal variables with comment text
- Displays a selection list
- Displays correction values (machine parameters)
- Displays messages (message stack)
- Displays special functions:
  - Modem configuration
  - Memory card control (CF)
  - CAN configuration status

LWN/LR.x/V03.01//Auslieferung/2015-06-03/en

copyright by
LIEBHERR

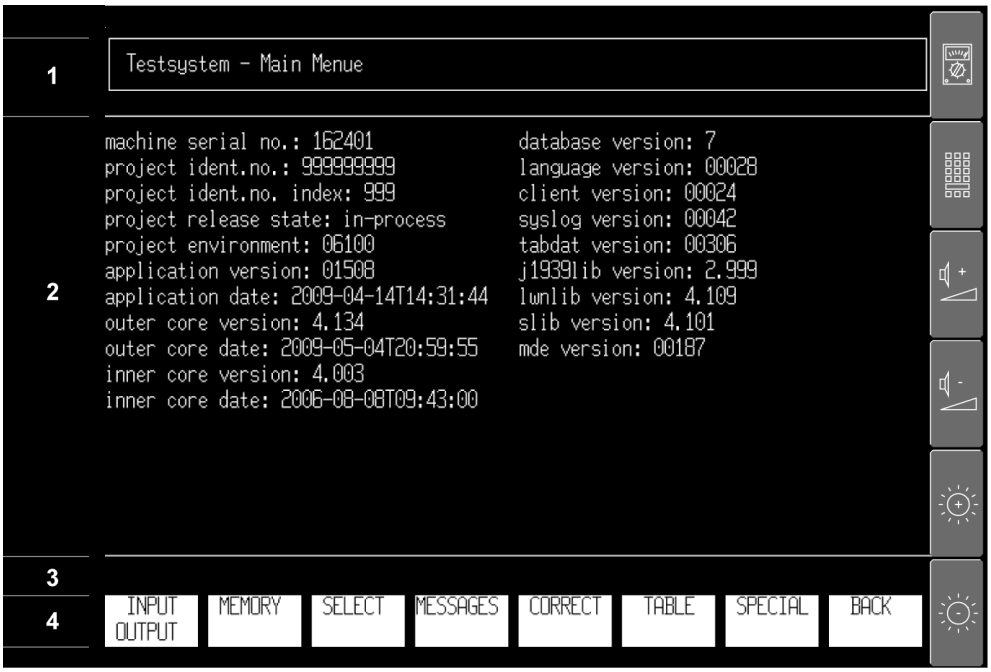

Fig. 2753: Litronic® testing system overview

1 Header: Name of the current screen

2 Main window: Displays information

3 Input line: For display and correction of entered values, display of status messages and input prompts

4 Menu bar: Buttons

The Litronic® testing system comprises a number of screen pages; the buttons are used to move from page to page. Some pages have two menu bars that you can toggle between using the button *MENU 1/2*. The first menu bar always appears when a page is opened. When the Litronic® testing system is first started, the homepage (Main Menu) is displayed. On each subsequent start, the page last open when the system was exited is loaded. The other settings are also retained.

Certain commands can be executed several times in succession by entering the number of repetitions (these appear in the input line) or by pressing the required button. This includes *PREVIOUS* and *NEXT* for example.

5.2.2 Screen pages

Main screen page

Switch from the main screen to the different screens of the Litronic testing system. Exit the current screen with the *BACK* button.

The following pages can be reached from the main screen page:
– Screen *INPUT/OUTPUT*
– Screen *MEMORY*
– Screen *SELECT*
– Screen *CORRECTION*
– Screen *MESSAGES*
– Screen *SPECIAL FUNCTIONS*

Screen *INPUT/OUTPUT*

The *INPUT/OUTPUT* screen serves to view the inputs and outputs of the modules.

LWN/LR.x/V03.01//Auslieferung/2015-06-03/en

Description of the buttons:
– *NEXT CAN LINE*moves to the next CAN line.
– *PREVIOUS MODULE* and *NEXT MODULE* switches between the modules of the selected CAN line.
– *PREVIOUS* and *NEXT* move the Cursor up and down to highlight a channel in the selected module. The highlighted channel is displayed as an inverse I or O.
– The marked channel can be taken over into the select list with *SELECT*. If the channel was already selected, the channel is deleted from the list again. The inverse display shows whether a channel has been selected.
– *MENU 1/2* switches between the two menu bars.
– *DOCUMENT* displays 16 channels (inputs or outputs) with comment text on one page. With digital modules (32 channels) use *PREVIOUS* and *NEXT* to switch to the second page.
– *UNDOCUM* displays all inputs or outputs on one page.
– *IDENTIFY* displays 16 inputs or outputs on one page with the identifier on one page. With digital modules (32 channels) use *PREVIOUS* and *NEXT* to switch to the second page.
– *BACK* returns to the main screen.

Screen *MEMORY*

The *MEMORY* screen shows the internally used buffer stores (markers).

Description of the buttons:
– *NEXT SECTION* moves between the 16 flag sections: X-B-W-D, 1-2-3-4.
– *PREVIOUS PAGE* and *NEXT PAGE* to switch between the pages. One page contains 16 markers of the selected section.
– *PREVIOUS* and *NEXT* move between the flags. The highlighted flag is displayed as an inverse M.
– The marked marker can be taken over into the select list with *SELECT*. If the marker was already selected, the marker is deleted from the list again. The inverse display of the marker shows whether a marker has been selected.
– *MENU 1/2* switches between the two menu bars.
– *DOCUMENT* displays the markers with comment text.
– *IDENTIFY* displays the flags with the identifier.
– *BACK* returns to the main screen.

Screen *SELECT*

The values can be entered in the select list to prevent having to switch between the input menu, output menu and marker menu pages. Now the entries can be viewed and edited on the *SELECT* screen. The select screen may consist of several pages. If the list is full and a new value is entered, the oldest value is deleted from the list. The select lists can also be saved on memory cards and loaded from there.

How to add entries to the Select list:
– With the *SELECT* button on the *INPUT/OUTPUT*, *MEMORY* screens or *CORRECTION*
– With the *ADD* button on the *SELECT* screen by entering the IEC address
– With the *LOAD FROM CARD* button on the *SELECT* screen from a file

How to delete entries from the Select list:
– Reselect a selected value with the *SELECT* button on the *INPUT/OUTPUT*, *MEMORY* or *CORRECTION* screens.
– Delete the marked entry with the *DELETE* button on the *SELECT* screen.

Description of the buttons:
– *ADD* adds a new entry to the Select list. A menu bar is displayed in which the IEC address is entered.

LWN/LR.x/V03.01//Auslieferung/2015-06-03/en

copyright by
LIEBHERR

- *DELETE* deletes the marked entry from the select list.
- *PREVIOUS* and *NEXT* to switch between the individual select entries. The marked entry is displayed with an inverted I, O or M.
- *NEXT PAGE* moves to the next page of the Select list so that more values can be viewed.
- *IDENTIFY* displays the inputs, outputs and markers with the identifier.
- *DOCUMENT* displays the inputs, outputs and markers with comment text.
- *LOAD FROM CARD* loads a new Select list from a file A menu is then displayed. The menu contains a list of files, one of which can be selected, and also allows a specific file name to be entered .
- *SAVE TO CARD* saves the current Select list in a file. A menu appears from which the name of the file can be selected .
- *MENU 1/2* switches between the two menu bars.
- *BACK* returns to the main screen.

Screen *Add Selection*

The *Add Selection* screen is called up with the *ADD* button on the *SELECT* screen. The IEC address of a new select entry can be entered this way. The ICE address is entered with the corresponding buttons in the input field.

Example:
- Desired IEC address: %QW1.17.1
- %, Q and W are entered using the appropriate buttons.
- 1.17.1 is entered as a normal number and can be edited as necessary using the button *TAKE & BACK* to apply the address.

Description of the buttons:
- Use M, I or Q to select the IEC type flag, input or output. These change each time a key is pressed and appear in the input bar. A correction can be made by pressing another type.
- Use X, B, W and D to select the size of the IEC entry. These change each time a key is pressed and appear in the input bar. A correction is made by pressing another size.
- *TAKE & BACK* returns to the *SELECT* screen and applies the IEC address from the entry bar.

Screen *Select File Load*

A saved select list can be loaded from the memory card on the *Select File Load* screen.

Description of the buttons:
- *CHARACTER NEXT* adds a new character to the end of the input bar. New characters can also be added by entering numbers and letters.
- *CHARACTER DOWN* and *CHARACTER UP* change the last character on the input bar.
- *PREVIOUS* and *NEXT* move the cursor up and down in the select list. When selecting a file, the name of the file is taken over into the entry bar.
- *LOAD* loads the selected file displayed in the entry bar and returns to the *SELECT* screen.
- *BACK* cancels the process and returns to the *SELECT* screen.

Screen *Select File Save*

A select list can be saved on the memory card on the *Select File Save* screen.

Description of the buttons:
- *CHARACTER NEXT* adds a new character to the end of the input bar. New characters can also be added by entering numbers and letters.

LWN/LR.x/V03.01/Auslieferung/2015-06-03/en

copyright by LIEBHERR

- *CHARACTER DOWN* and *CHARACTER UP* change the last character on the input bar.
- *PREVIOUS* and *NEXT* move the cursor up and down in the select list. When selecting a file, the name of the file is taken over into the entry bar.
- *SAVE* saves the select list in a file (enter file name in the entry bar) and returns to the *SELECT* screen.
- *BACK* cancels the process and returns to the *SELECT* screen.

Screen *CORRECTION*

The *CORRECTION* screen displays correction values.

Description of the buttons:
- *NEXT SECTION* switches between the four correction value sections: X-B-W-D.
- *PREVIOUS PAGE* and *NEXT PAGE* to switch between the pages. One page contains 16 correction values of the selected section.
- *PREVIOUS* and *NEXT* move between the correction values. The highlighted correction value is displayed as an inverse M.
- *DOCUMENT* displays the correction values with comment text.
- *IDENTIFY* displays the correction values with the identifier.
- *BASE MIN & MAX* displays the correction values with the default value and upper and lower limits.
- *SAVE TO CARD* saves the current correction values in a file. The file name can be selected from the menu that now appears. A standard file name (created from the current date) is suggested. This name can be changed if required .
- Use *SELECT* to add the highlighted entry to the Select list. If the entry is already selected, it will be removed from the list. The name of a correction value will be displayed inverse if it is selected.
- *MENU 1/2* switches between the two menu bars.
- *BACK* returns to the main screen.

Screen *MESSAGES*

The *MESSAGES* screen shows the saved application messages (e.g. sensor errors) and all system errors (e.g. CAN bus, modules, central unit). The application messages are buffered internally.

Description of the buttons:
- *ALL* lists all saved messages (maximum 15,000).
- *PREVIOUS START* and *NEXT START* move between all messages saved at each start-up.
- *PRIORITY MAXFILTER* and *PRIORITY MINFILTER* list the saved messages filtered by priority.
- *GROUP FILTER* lists the saved messages filtered by certain groups.
- *SINCE START* lists only the messages since the current machine start-up.
- *LANGUAGE* enables a different language for the messages. Messages that are not found in the selected language will be displayed in English. Switching only has an effect on the *MESSAGES* screen .
- *PREVIOUS* and *NEXT* move between the messages.
- *SAVE TO CARD* saves all messages (ALL or SINCE START) in a file. The file name can be selected from the menu that now appears. A standard file name (created from the current date) is suggested. This name can be changed if required .
- *MENU 1/2* switches between the two menu bars.
- *BACK* returns to the main screen.

LWN/LR.x/V03.01//Auslieferung/2015-06-03/en

copyright by
LIEBHERR

Screen *Language Selection*

The message language can be selected on the *Language Selection* screen.

Description of the buttons:
– *PREVIOUS* and *NEXT* move between the different languages.
– *SELECT* is used to select and load the highlighted language.

Screen *SPECIAL FUNCTIONS*

From the *SPECIAL FUNCTIONS* screen, you can access various additional screens or return to the main screen with the *BACK* button.

Screen *Modem Function*

The GSM modem can be configured and operated on the *Modem Function* screen.

The current modem status (e.g. Online, Offline, False PIN) can be viewed in the entry bar.

Description of the buttons:
– *DIAL* dials a previously entered phone number.
– *HANGUP* terminates an active modem connection (hang up handset).
– *RLP ON/OFF* activates or deactivates the radio link protocol for GSM modem connections. The settings first become effective after the next program start.
– *V32/V110* activates the V32 protocol or V110 protocol for GSM modem connections. The settings first become effective after the next program start.
– *PREVIOUS* and *NEXT* change between the interfaces; the default Modem Client is COM2.
– *PIN INPUT* allows the PIN codes for the GSM modem to be entered manually.
– *MODEM CONNECT* enables the modem server programme to be started on an unused interface.
– *MENU 1/2* switches between the two menu bars.
– *BACK* returns to the *SPECIAL FUNCTIONS* screen.

Screen *Drive Function*

The *Drive Function* screen displays information about the current drive.

Description of the buttons:
– *REMOVE CARD* must be performed before removing a memory card from the drive. Switching off the Litronic control system is another option. The system automatically recognises when a new card has been inserted.
– *DIR LIST* displays the files and directories (no subdirectories) of the current drive.
– *PREVIOUS DRIVE* and *NEXT DRIVE* switch between the individual drives known to the Litronic control system.
– *CHECK CARD* checks the current drive for errors.
– *BACK* returns to the *SPECIAL FUNCTIONS* screen.

Screen *Time Function*

The *Time Function* screen shows the date and time.

Description of the buttons:
– *DAYLIGHT SAVING* switches to the summer time setting.
– *TIMEZONE MOVE WEST* moves the time zone setting one hour westwards.
– *BACK* returns to the *SPECIAL FUNCTIONS* screen.

LWN/LR.x/V03.01//Auslieferung/2015-06-03/en

copyright by LIEBHERR

Priority Level screen (for Liebherr service personnel only)

The Litronic code can be entered on the *Priority Level* screen to access supervisor level. The supervisor level is required to e.g. set the time.

Description of the buttons:
– When the *LEVEL CHANGE* key is pressed, the value in the input bar is copied and examined to see whether it is a valid Litronic® code.
– *BACK* returns to the *SPECIAL FUNCTIONS* screen.

Screen *CAN Configuration*

The *CAN Configuration* screen shows all installed CAN modules with utilization status.

Description of the buttons:
– *NEXT PAGE* switches to the next screen.
– *BACK* returns to the *SPECIAL FUNCTIONS* screen.

Screen *CAN Line Information*

The *CAN Line Information* screen shows the used CAN lines and settings.

Description of the buttons:
– *MODULE INFO* switches to the *CAN Configuration* screen.
– *BACK* returns to the *SPECIAL FUNCTIONS* screen.

Screen *Display Configuration*

On the *Display Configuration* screen, you can select options for the display of the *INPUT/OUTPUT* screen.

Description of the buttons:
– *ALL MODULES* displays all CAN modules on the *INPUT/OUTPUT* screen.
– *ONLY USED MODULES* only displays the CAN modules set to “used” on the *INPUT/OUTPUT* screen.
– With *NUMBER STYLE* the inputs, outputs and markers are switched between standard display and hexadecimal display.
– *UPDATE INTERVAL* changes the update speed of the input, output and marker display.
– *BACK* returns to the *SPECIAL FUNCTIONS* screen.

Screen *System Language Selection*

The system language can be selected on the *System Language Selection* screen, whereby a language is selected or the internal standard language loaded.

The selected system language is only activated once the Litronic control system is switched back on.

Description of the buttons:
– *PREVIOUS* and *NEXT* move between the different languages.
– *SELECT* loads the marked language as new system language and returns to the *SPECIAL FUNCTIONS* screen.
– *USE DEFAULT* loads the English language as new system language and returns to the *SPECIAL FUNCTIONS* screen.
– *MENU 1/2* switches between the two menu bars.
– *BACK* cancels the process and returns to the *SPECIAL FUNCTIONS* screen.

LWN/LR.x/V03.01//Auslieferung/2015-06-03/en

copyright by
LIEBHERR

Screen *Sampling Trace*

The *Sampling Trace* screen is used for the online data recording of previously defined inputs and outputs. The *Sampling Trace* screen displays information about the “sampling trace” and allows to change the status and save the recorded data.

Description of the buttons:
- *SAMPLE ACTIVE* activates “sampling trace” after the options were defined. Serves to record and check the trigger conditions.
- *TRIGGER MANUAL* simulates the trigger conditions. *TRIGGER MANUAL* is only available if “Sampling Trace” is activated and the trigger conditions were not yet fulfilled.
- *END MANUAL* stops recording of the “sampling trace” and automatically leads to ready state. *END MANUAL* is only available if the “sampling trace” is activated.
- *LOAD FROM CARD* loads a configuration from a saved “Sampling Trace” file. A menu appears from which the name of the file can be selected .
- *SAVE TO CARD* saves the recorded data and the “Sampling Trace” configuration in a file. A menu appears from which the name of the file can be selected .
- *SAVE TO SELECT* saves the variables used in the “Sampling Trace” in the Select list. Existing entries in the Select list are deleted.
- *LOAD FROM SELECT* loads the selected variables into the “sampling trace” list.
- *PREVIOUS* and *NEXT* switch between the configuration data. The marked entry is displayed inverted.
- *CHANGE* changes the marked entry to the value in the entry bar. The value must lie within the valid limits.
- *MENU 1/2* switches between the two menu bars.
- *BACK* returns to the *SPECIAL FUNCTIONS* screen.

Screen *System Status*

The *System Status* screen shows the current system status (e.g. running, stopped) and the timing of the SPS tasks.

Description of the buttons:
- *SYSTEM TASKS* displays information about the system tasks.
- *BOARD INFO* displays information about the circuit board (e.g. voltage, temperature).
- *BACK* returns to the *SPECIAL FUNCTIONS* screen.

Screen *MDE/PDE*

The *MDE/PDE* screen displays the status of the MDR (Machine Data Recording), the PDR (Process Data Recording), and the data logger.

Description of the buttons:
- *MDE* displays the MDR data.
- *PDE* displays the PDR data.
- *SELECT GRAPHIC* lists saved graphics (e.g. company logo) for printout of the PDR data. The desired graphic can be selected.
- *LOGGER* displays the data logger.
- *BACK* returns to the *SPECIAL FUNCTIONS* screen.

Screen *Clients*

The *Clients* screen displays the status of the individual communication interfaces (clients).

LWN/LR.x/V03.01//Auslieferung/2015-06-03/en

copyright by
LIEBHERR

Description of the buttons:
– *PREVIOUS* and *NEXT* move between the interfaces.
– *BACK* returns to the *SPECIAL FUNCTIONS* screen.

5.2.3 Starting the Litronic® testing system

WARNING
No error messages from the Litronic control displayed in the Litronic® testing system!

▶ Only perform crane work on the *Operation* screen.

▶ Press the *Settings* button on the screen.
▷ The *Settings* screen appears on the monitor.

▶ Press the *Litronic testing system* button on the monitor.
▷ The Litronic testing system main screen is displayed on the monitor.

LWN/LR.x/V03.01//Auslieferung/2015-06-03/en

copyright by
LIEBHERR

5.3 Fuses

5.3.1 List of fuses

The following table lists the fuses by rating and module.

Fuse	Rating	Module
F1	50 A	Main fuse module
F2	50 A	Main fuse ignition on
F3	50 A	Main fuse additional supply engine control
F4	10 A	Main fuse fuel pre-filter heating
F5	20 A	Engine control device
F6	20 A	Voltage supply exhaust aftertreatment system
F7		
F8	13 A	Main fuse parked position
F9	13 A	Main fuse LD+, cabin tilt (LED+)
F10	13 A	Main fuse measurement supply
F21	10 A	Radio, horn, camera surveillance, switching cabinet ventilation, PA system
F22	10 A	Cabin lighting, engine compartment lighting
F23	5 A	Voltage supply control panel *X11*
F24	10 A	Cigarette lighter, windscreen wash system, heating control valve, charger for radio remote control
F25	5 A	Front windscreen wiper
F26	5 A	Top windscreen wiper
F31	5 A	Boom voltage supply
F32	10 A	CAN bus input module 33
F33	10 A	CAN bus input module 41
F34	10 A	CAN bus input module 42
F35	10 A	CAN bus input module 34 + 43
F36	10 A	Reserve
F41	10 A	Voltage supply engine electronics, control of fuel pre-filter heating
F42	10 A	Voltage supply modem
F43	10 A	Voltage supply assembly functions (tilting-back supports, cylinder adjustments)
F44	10 A	Safety lever, emergency operation
F45	10 A	Voltage supply CAN bus line 1 + 2
F46	10 A	Voltage supply CAN bus line 3 + 4
F47	5 A	PDR screen

LWN/LR.x/V03.01//Auslieferung/2015-06-03/en

copyright by LIEBHERR

Fuse	Rating	Module
F48	10 A	Voltage supply control panel *X12*, control auxiliary heating clock, key switch *Load moment limiter shutoff*
F49	15 A	Floodlights on cabin
F50	15 A	Floodlights on uppercarriage
F51	15 A	Additional floodlight on uppercarriage
F52	15 A	Refueling pump
F53	10 A	Supply leader electronics
F54	10 A	Reserve
F55	15 A	Additional equipment
F56	10 A	Additional equipment, electronic seat heating and positioning
F71	10 A	CAN-bus output module 17, register 4, safety valves, relay control LD+
F72	10 A	CAN-bus output module 9, register 4, emergency stop engine
F73	10 A	CAN bus output module 9, register 3
F74	10 A	Control computer + control computer PDE, emergency stop
F75	10 A	CAN bus output module 18, register 2
F76	15 A	Cabin ventilator, interior cabin lighting, voltage supply, engine diagnosis plug
F81	10 A	CAN bus output module 17, register 1-3
F82	10 A	CAN bus output module 18, register 1, 3, 4
F83	10 A	CAN bus output module 19
F84	10 A	CAN bus output module 9, register 1
F85	10 A	CAN bus output module 9, register 2
F86	10 A	CAN bus output module 10, register 1
F87	10 A	CAN bus output module 10, register 2
F88	10 A	CAN bus output module 10, register 3
F89	10 A	CAN bus output module 10, register 4
F90	10 A	Monitoring relay LED+, cabin tilt
F90.1	10 A	Hydraulic grab
F90.2	10 A	CAN bus output module 20
F91	10 A	Optional fuse OLN, SCR hose heaters
F92	10 A	AGR fuse
F93	10 A	AGR fuse
F94	10 A	DK fuse
F95	10 A	Lambda fuse
F96	10 A	Lambda fuse

Tab. 379: List of fuses

LWN/LR.x/V03.01//Auslieferung/2015-06-03/en

copyright by
LIEBHERR

Fuse	Rating	Module
F11	10 A	Auxiliary heating
F12	16 A	Auxiliary heating
F13	10 A	Cabin elevation
F14	6 A	Obstacle warning light
F15	16 A	Hydraulic grab, slurry wall grab
F16	20 A	Hydraulic grab
F17	50 A	Slurry wall grab
F18	10 A	Floodlights on boom
F19	25 A	Refueling pump
F20	16 A	Floodlights on main boom head
F61	20 A	Slurry wall grab
F62		Slurry wall grab
F63	10 A	Slurry wall grab
F64	10 A	Slurry wall grab
F65	10 A	Slurry wall grab
F66	10 A	Slurry wall grab
F101	10 A	Counterweight limit switch, Diseko module
F102	10 A	Counterweight limit switch, Diseko module
F103	10 A	Counterweight limit switch, Diseko module
F104	10 A	Counterweight limit switch
F105		
F106		
F111	10 A	Counterweight limit switch, Diseko module
F112	10 A	Counterweight limit switch, Diseko module
F113	10 A	Counterweight limit switch, Diseko module
F114		
F115		
F116		

Tab. 380: List of fuses - optional additional equipment

5.3.2 Checking the fuses

The switching cabinet is located behind the cabin.

LWN/LR.x/V03.01//Auslieferung/2015-06-03/en

copyright by
LIEBHERR

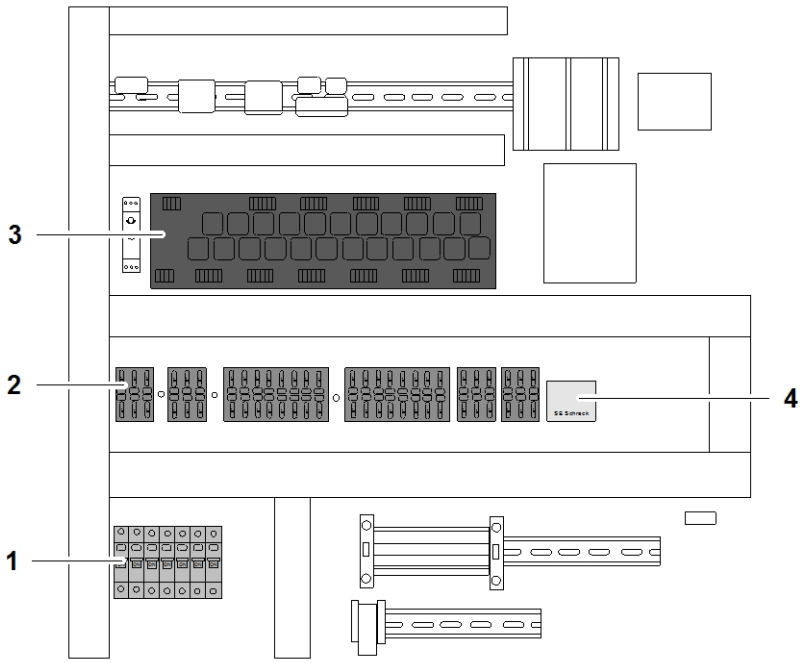

Fig. 2756: Switch cabinet

1 Circuit breakers
2 Flat fuse links
3 Change-over relay
4 Fuse box with spare fuses, fuse tester and holder

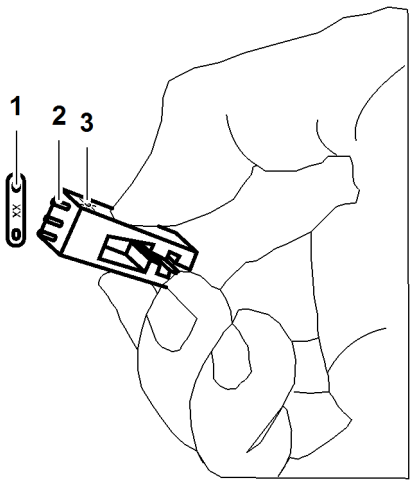

Fig. 2757: Checking the fuses

1 Fuse
2 Metal pins
3 LED

If the green LED **3** on the fuse tester lights, the fuse is OK.

▶ To check the fuse: press the fuse tester with metal pins **2** onto the live fuse **1**.

Troubleshooting
The green LED **3** on the fuse tester does not light up?

▶ Replace the fuse.

LWN/LR.x/V03.01//Auslieferung/2015-06-03/en

copyright by
LIEBHERR

5.3.3 Replacing fuses

NOTICE
Wrong fuses are used!
Damage to the electrical system.

- ▶ Switch off the battery main switch.
- ▶ Only use fuses that have the amp rating (colour coding) prescribed by the manufacturer.

- ▶ Switch off the battery main switch.
- ▶ Remove the fuse from the fuse box.

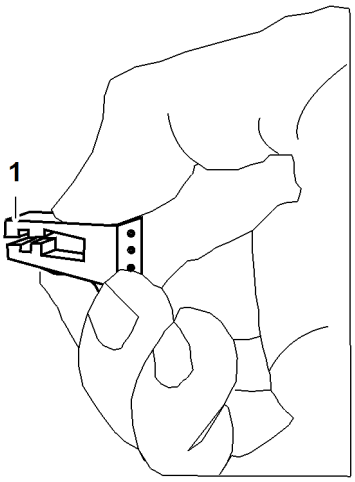

Fig. 2758: Replacing the fuse

1 Fuse holder

- ▶ To replace the fuse: use the fuse holder **1** to pull faulty fuses out of the socket.
- ▶ Use the fuse holder **1** to plug the new fuse into the socket.

LWN/LR.x/V03.01//Auslieferung/2015-06-03/en

copyright by
LIEBHERR

Operational planning 6

6 Operational planning

6 Operational planning

The chapter **Work planning** deals with the following subjects:
– Planning basics for secure and problem-free application

WARNING
Incorrect work planning!
Severe injuries, damage to the machine.

▶ Always create a work plan before using the machine. Operational planning is vital for safe and problem-free operation of the machine.

Exemplary procedure:
– Plan how the machine and equipment are to be transported.
– Specify the type of application and the relevant operating mode.
– Discuss the weights and dimensions of the loads to be lifted.
– Note the load-bearing capacity of the ground.
– Plan the assembly site and note any spatial restrictions (such as buildings).
– Note overhead cables and underground pipes and cables, and the relevant safety distances.
– Note the influence of aircraft, transmitter and radar systems, the weather, etc.

This is just a small selection of the most important points in work planning.

6.1 Assembly site

DANGER
Ground has a limited bearing strength!
Machine toppling over.

▶ Observe the safety notes regarding the load-bearing capacity of the ground (For more information see: 2.11.11 Ground bearing strength, page 586) .

The ground pressure being exerted by the machine in operation can be read off the optional ground pressure display.

The following maximum ground pressures occur below the jacks of the basic machine during assembly and when utilizing the self-assembly system:

Type	Maximum ground pressure
LR 1001	12 kg/cm² 170.68 psi
LR 1002	12 kg/cm² 170.68 psi

LWN/LR.x/V03.01//Auslieferung/2015-06-03/en

copyright by LIEBHERR

Type	Maximum ground pressure
LR 1003	18 kg/cm² 256.02 psi
LR 1004	12 kg/cm² 170.68 psi
LR 1006	18.8 kg/cm² 267.40 psi

Tab. 381: Ground pressures under the basic machine's jacks

Maximum ground pressures depending on counterweight of counterweight carriage*:

Counterweight carriage weight	Maximum ground pressure
19.2 t 42,328 lb	5.5 kg/cm² 78.23 psi
33.6 t 74,074 lb	6.3 kg/cm² 89.61 psi
48 t 105,820 lb	7.2 kg/cm² 102.41 psi
62.4 t 137,566 lb	8.1 kg/cm² 115.21 psi
76.8 t 169,313 lb	8.8 kg/cm² 125.16 psi
91.2 t 201,059 lb	9.3 kg/cm² 132.28 psi
105.6 t 232,805 lb	9.9 kg/cm² 140.81 psi
120 t 264,551 lb	10.2 kg/cm² 145.08 psi

*Tab. 382: Ground pressures below counterweight carriage**

Maximum ground pressures depending on counterweight of suspended counterweight*:

Suspended counterweight weight	Maximum ground pressure
4 t 8,818 lb	0.33 kg/cm² 4.69 psi
20 t 44,092 lb	1.66 kg/cm² 23.61 psi
40 t 88,184 lb	3.32 kg/cm² 47.22 psi
60 t 132,275 lb	4.99 kg/cm² 70.97 psi
80 t 176,367 lb	6.65 kg/cm² 94.58 psi

LWN/LR.x/V03.01//Auslieferung/2015-06-03/en

copyright by
LIEBHERR

Suspended counterweight weight	Maximum ground pressure
100 t 220,459 lb	8.31 kg/cm² 118.19 psi
120 t 264,551 lb	9.97 kg/cm² 141.80 psi

*Tab. 383: Ground pressures below suspended counterweight**

LWN/LR.x/V03.01//Auslieferung/2015-06-03/en

copyright by
LIEBHERR

6.2 Tools required

We recommend the following equipment for assembling the machine:
– Wooden blocks for supporting the boom components
– Permitted grease for lubricating the pins (For more information see: 9.2.3 Lubrication chart, page 1802)

6.2.1 Machine with self-assembly system

The machine is designed to be assembled without the need for an assist crane.

If there is not enough space or the ground conditions are not suitable for self assembly, an assist crane should be used for support.

All the rigging is supplied.

6.2.2 Machine without self-assembly system

WARNING
Incorrect work planning!

▶ Consider what aids will be necessary when assembling a machine without a self-assembly system .

▶ Any questions or uncertainties must be referred to Liebherr after sales service for clarification.

The customer is responsible for selecting the appropriate tools.

LWN/LR.x/V03.01//Auslieferung/2015-06-03/en

copyright by
LIEBHERR

6.3 Required length of winch1/winch2 rope

The length of the winch1/winch2 ropes depends on the following factors:
– boom pendant strap
– Boom length
– the minimum radius of the boom
– Reeving

The following formula is used to roughly calculate the rope length of winch1/winch2 needed to lower the hook or pulley block to the ground.

6.3.1 Calculating the length of winch1/winch2 rope

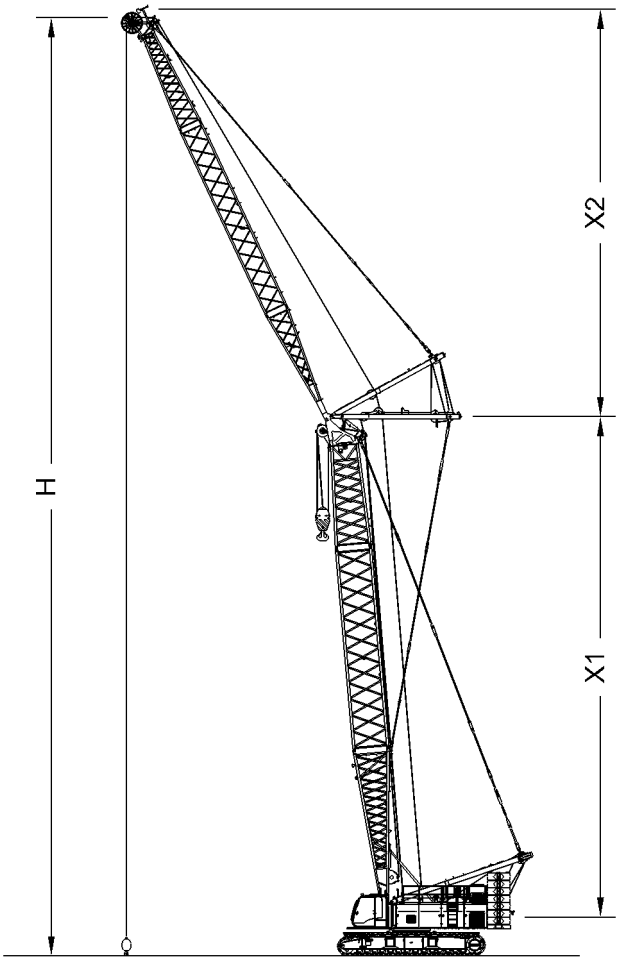

Fig. 2759: Calculating the length of winch1/winch2 rope

S = X1 **+** X2 **+** (n **x** H) **+** 3_{SW} **+** R

Abbreviations	Designation
S	Length of winch1/winch2 rope
X1	Main boom length
X2	Jib length
n	Number of reevings

LWN/LR.x/V03.01//Auslieferung/2015-06-03/en

copyright by
LIEBHERR

Abbreviations	Designation
H	Pulley height: Maximum value from the current load chart
3_{SW}	Safety windings: approx. 7 m (23‘ ft-in) length of rope remaining on the winch
R	Reserve: allows for the rope sag and the rope lying on the rope pulleys

Tab. 384: Explanation of the variables for calculating the rope length of winch1/ winch2

LWN/LR.x/V03.01//Auslieferung/2015-06-03/en

copyright by
LIEBHERR

6.4 Choosing the correct hook or pulley block

NOTICE
Incorrect hook or pulley block selected!
Pulley blocks or hooks with too low an unladen weight cannot be lowered.
Pulley blocks or hooks with an excessively high unladen weight reduce the maximum lifting capacity.

▶ Select the hook and/or pulley block using the table below.

▶ For pulley blocks or hooks with removable counterweight slabs, the weight must be selected so that the minimum weight for the boom length is attained.

Ensure that the following conditions are fulfilled:
– The hook or pulley block is permissible for the load to be lifted.
– The groove diameter of the pulley block matches the rope diameter.
– The unladen weight of the hook or pulley block is sufficient for the boom length and reeving.

Rope reeving	1	2	3	4	5	6	7	8	9	10
Total boom length	Dead weight of the hook/pulley block									
190 m 623 ft	1150 kg 2,535 lb	2050 kg 4,519 lb								
180 m 590 ft	1100 kg 2,425 lb	1900 kg 4,189 lb	3000 kg 6,614 lb							
170 m 558 ft	1000 kg 2,205 lb	1800 kg 3,968 lb	2800 kg 6,173 lb							
150 m 492 ft	900 kg 1,984 lb	1600 kg 3,527 lb	2500 kg 5,511 lb							
130 m 426 ft	800 kg 1,764 lb	1400 kg 3,086 lb	2150 kg 4,740 lb							
120 m 393 ft	700 kg 1,543 lb	1300 kg 2,866 lb	2000 kg 4,409 lb	2750 kg 6,063 lb						
110 m 360 ft	650 kg 1,433 lb	1200 kg 2,646 lb	1800 kg 3,968 lb	2500 kg 5,511 lb						
100 m 328 ft	600 kg 1,323 lb	1050 kg 2,315 lb	1650 kg 3,638 lb	2300 kg 5,071 lb	2950 kg 6,504 lb					
90 m 295 ft	550 kg 1,213 lb	950 kg 2,094 lb	1500 kg 3,307 lb	2050 kg 4,519 lb	2650 kg 5,842 lb	3300 kg 7,275 lb				
80 m 262 ft	500 kg 1,102 lb	850 kg 1,874 lb	1350 kg 2,976 lb	1850 kg 4,078 lb	2350 kg 5,181 lb	2900 kg 6,393 lb	3500 kg 7,716 lb			
70 m 230 ft	450 kg 992 lb	750 kg 1,653 lb	1200 kg 2,646 lb	1600 kg 3,527 lb	2100 kg 4,630 lb	2550 kg 5,622 lb	3100 kg 6,834 lb	3600 kg 7,937 lb		
60 m 197 ft	350 kg 772 lb	650 kg 1,433 lb	1000 kg 2,205 lb	1400 kg 3,086 lb	1800 kg 3,968 lb	2200 kg 4,850 lb	2650 kg 5,842 lb	3100 kg 6,834 lb	3600 kg 7,937 lb	
50 m 164 ft	300 kg 661 lb	550 kg 1,213 lb	850 kg 1,874 lb	1150 kg 2,535 lb	1500 kg 3,307 lb	1850 kg 4,078 lb	2200 kg 4,850 lb	2600 kg 5,732 lb	3000 kg 6,614 lb	3450 kg 7,606 lb

LWN/LR.x/V03.01//Auslieferung/2015-06-03/en

copyright by LIEBHERR

Rope reeving	1	2	3	4	5	6	7	8	9	10
Total boom length	**Dead weight of the hook/pulley block**									
40 m 131 ft	250 kg 551 lb	450 kg 992 lb	650 kg 1,433 lb	950 kg 2,094 lb	1200 kg 2,646 lb	1500 kg 3,307 lb	1800 kg 3,968 lb	2100 kg 4,630 lb	2400 kg 5,291 lb	2750 kg 6,063 lb
30 m 98 ft	200 kg 441 lb	350 kg 772 lb	500 kg 1,102 lb	700 kg 1,543 lb	900 kg 1,984 lb	1100 kg 2,425 lb	1350 kg 2,976 lb	1600 kg 3,527 lb	1800 kg 3,968 lb	2100 kg 4,630 lb
20 m 66 ft	150 kg 331 lb	250 kg 551 lb	350 kg 772 lb	500 kg 1,102 lb	600 kg 1,323 lb	750 kg 1,653 lb	900 kg 1,984 lb	1100 kg 2,425 lb	1250 kg 2,756 lb	1400 kg 3,086 lb

Tab. 385: Selecting the hook/pulley block for reeving 1 to 10

Rope reeving	11	12	13	14	15	16	17	18	19	20
Total boom length	**Dead weight of the hook/pulley block**									
50 m 164 ft	3900 kg 8,598 lb	4350 kg 9,590 lb	4800 kg 10,582 lb	5300 kg 11,684 lb						
40 m 131 ft	3100 kg 6,834 lb	3500 kg 7,716 lb	3900 kg 8,598 lb	4300 kg 9,480 lb	4700 kg 10,362 lb	5150 kg 11,354 lb				
30 m 98 ft	2350 kg 5,181 lb	2650 kg 5,842 lb	2950 kg 6,504 lb	3250 kg 7,165 lb	3550 kg 7,826 lb	3900 kg 8,598 lb	4250 kg 9,370 lb	4600 kg 10,141 lb	4950 kg 10,913 lb	5350 kg 11,795 lb
20 m 66 ft	1600 kg 3,527 lb	1800 kg 3,968 lb	2000 kg 4,409 lb	2200 kg 4,850 lb	2400 kg 5,291 lb	2650 kg 5,842 lb	2900 kg 6,393 lb	3100 kg 6,834 lb	3350 kg 7,385 lb	3600 kg 7,937 lb

Tab. 386: Selecting the hook/pulley block for reeving 11 to 20

LWN/LR.x/V03.01//Auslieferung/2015-06-03/en

copyright by
LIEBHERR

6.5 Positioning the hook or pulley block

DANGER
Incorrect positioning or raising of the the hook or pulley block when erecting!

- ▶ The permitted weight of the hook or pulley block is listed in the load chart.
- ▶ Only erect when the hook/pulley block is on the ground.
- ▶ Slacking of the rope must be avoided when erecting.
- ▶ Do not drag the hook or pulley block.
- ▶ Ensure that there is no diagonal pull when lifting the hook or pulley block.
- ▶ Do not raise the hook or pulley block without a valid load chart.

The positioning of the hook or pulley block is dependent in each case on their own dead weight, which can be found in the load chart.

The weight of the hook or pulley block can be found on a plate on the hook or pulley block.

LWN/LR.x/V03.01//Auslieferung/2015-06-03/en

copyright by
LIEBHERR

6.6 Choice of correct winch in derrick operation

WARNING
Incorrect winch function(s)!
Severe injuries, damage to machine.

▶ Use the winches exclusively as shown.

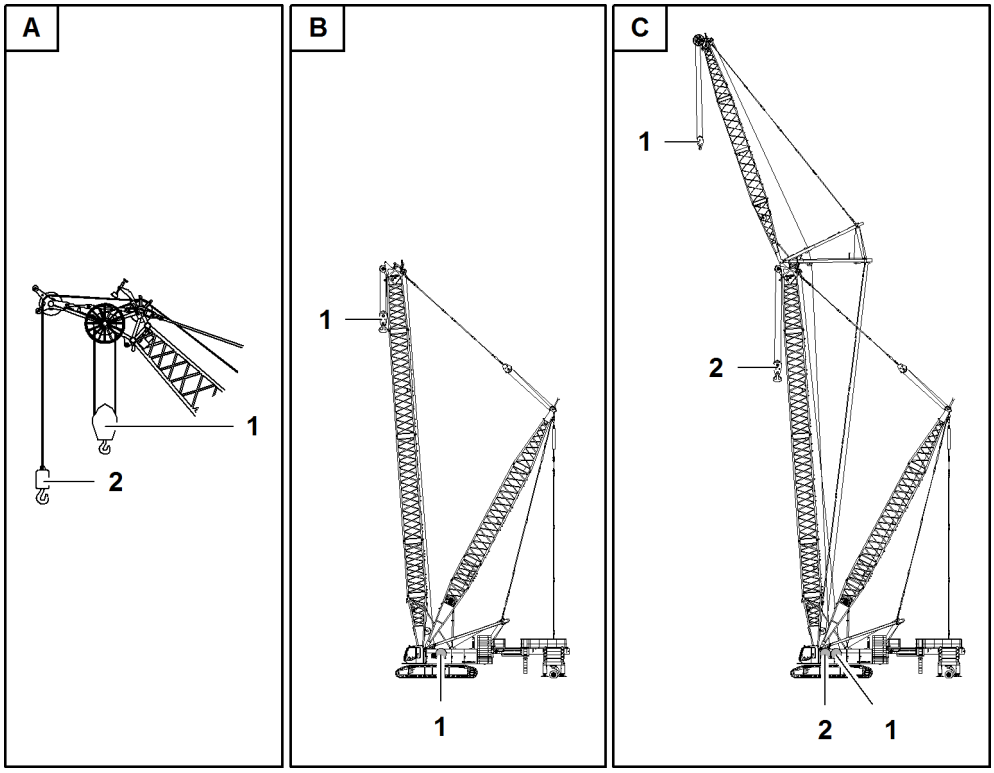

Fig. 2760: Choice of correct winch in derrick mode

1 Winch 1
2 Winch 2
A Main boom + auxiliary jib or jib + auxiliary jib
B Main boom
C Main boom + jib

LWN/LR.x/V03.01//Auslieferung/2015-06-03/en

copyright by
LIEBHERR

6.7 Restrictions due to exposure to wind

DANGER
Life-threatening exposure to wind!
Toppling of machine, structural breakdown.

▶ Observe general safety instructions regarding exposure to wind (For more information see: 2.11.9 Exposure to wind, page 580) .

The procedure for increased wind speeds during the operation of the machine is based on the three levels described below:
– Reducing the load
– Setting boom to parked position
– Laying down the boom

6.7.1 Erecting the boom

DANGER
Excessive wind load!
Toppling of machine, structural breakdown.

If the maximum admissible wind speed according to the preface of the valid load chart is reached:
▶ Do not erect boom.

If the wind speeds above the maximum admissible wind speed according to the preface of the valid load chart are reached or expected, it is not permitted to erect the boom.

6.7.2 Reducing the load

The load reduction for crane operation in the event of wind is stated in the foreword of the load chart.

6.7.3 Parked positions of boom configurations

DANGER
Wind speed too high!
Toppling of machine.

▶ Turn boom into the wind.

▶ Before the maximum permitted wind speed is exceeded, place boom in specified parked position.

▶ Lay the suspended counterweight/counterweight carriage on the ground.

▶ Relieve the strain on the pendant ropes and/or pendant straps.

▶ Place the load on the ground.

▶ Pull up hook.

LWN/LR.x/V03.01//Auslieferung/2015-06-03/en

copyright by LIEBHERR

The parked positions of the boom configurations are valid for the specified maximum wind speeds in the following tables. If these values are exceeded, the boom must be laid down.

All stated wind speeds are 3 second wind gust speeds. The stated wind speeds are only valid in wide track operation and with all counterweights attached to the machine. In case of deviating machine configuration: Contact Liebherr customer service.

Parked position for a machine without derrick equipment*

Parked position of main boom 2821 (+ auxiliary jib)

Description	Value
Maximum wind speed	22 m/s 72.18 ft/s
Main boom length	20 m (65‘ 7“ ft-in) to 26 m (85‘ 4“ ft-in)
Main boom angle	54° to 60°

Tab. 387: Parked position of main boom 2821 (+ auxiliary jib)

Description	Value
Maximum wind speed	22 m/s 72.18 ft/s
Main boom length	29 m (95‘ 2“ ft-in) to 104 m (341‘ 2“ ft-in)
Main boom angle	72° to 80°

Tab. 388: Parked position of main boom 2821 (+ auxiliary jib)

Parked position of main boom 2821 + reducing adapter 2821/2316

Description	Value
Maximum wind speed	22 m/s 72.18 ft/s
Main boom length	69 m (226‘ 5“ ft-in) to 114 m (374‘ ft-in)
Main boom angle	72° to 80°

Tab. 389: Parked position of main boom 2821 + reducing adapter 2821/2316

Description	Value
Maximum wind speed	20 m/s 65.62 ft/s
Main boom length	117 m (383‘ 10“ ft-in) to 123 m (403‘ 7“ ft-in)

LWN/LR.x/V03.01//Auslieferung/2015-06-03/en

copyright by
LIEBHERR

Description	Value
Main boom angle	72° to 80°

Tab. 390: Parked position of main boom 2821 + reducing adapter 2821/2316

Parked position of main boom 2821 + fixed jib 1713

Description	Value
Maximum wind speed	22 m/s 72.18 ft/s
Main boom length	all
Main boom angle	72° to 78°
Jib length	all
Jib offset	15° or 30°

Tab. 391: Parked position of main boom 2821 + fixed jib 1713

Parked position of main boom 2821 + fixed jib 1507

Description	Value
Maximum wind speed	22 m/s 72.18 ft/s
Main boom length	20 m (65‘ 7“ ft-in) to 26 m (85‘ 4“ ft-in)
Main boom angle	68° to 72°
Jib offset	28°

Tab. 392: Parked position of main boom 2821 + fixed jib 1507

Description	Value
Maximum wind speed	22 m/s 72.18 ft/s
Main boom length	29 m (95‘ 2“ ft-in) to 86 m (282‘ 2“ ft-in)
Main boom angle	72° to 78°
Jib offset	28°

Tab. 393: Parked position of main boom 2821 + fixed jib 1507

Parked position of main boom 2821 + fixed jib 1008

Description	Value
Maximum wind speed	22 m/s 72.18 ft/s
Main boom length	20 m (65‘ 7“ ft-in) to 26 m (85‘ 4“ ft-in)
Main boom angle	68° to 72°

LWN/LR.x/V03.01//Auslieferung/2015-06-03/en

copyright by
LIEBHERR

Description	Value
Jib length	all
Jib offset	15° or 30°

Tab. 394: Parked position of main boom 2821 + fixed jib 1008

Description	Value
Maximum wind speed	22 m/s 72.18 ft/s
Main boom length	29 m (95‘ 2“ ft-in) to 86 m (282‘ 2“ ft-in)
Main boom angle	72° to 78°
Jib length	all
Jib offset	15° or 30°

Tab. 395: Parked position of main boom 2821 + fixed jib 1008

Parked position of main boom 2821 + fixed jib 0906

Description	Value
Maximum wind speed	22 m/s 72.18 ft/s
Main boom length	20 m (65‘ 7“ ft-in) to 26 m (85‘ 4“ ft-in)
Main boom angle	68° to 72°
Jib offset	30°

Tab. 396: Parked position of main boom 2821 + fixed jib 0906

Description	Value
Maximum wind speed	22 m/s 72.18 ft/s
Main boom length	29 m (95‘ 2“ ft-in) to 95 m (311‘ 8“ ft-in)
Main boom angle	72° to 78°
Jib offset	30°

Tab. 397: Parked position of main boom 2821 + fixed jib 0906

Parked position of main boom 2821 + luffing jib 2316 (+ auxiliary jib)

Description	Value
Maximum wind speed	22 m/s 72.18 ft/s
Main boom length	20 m (65‘ 7“ ft-in) to 74 m (242‘ 9“ ft-in)

LWN/LR.x/V03.01//Auslieferung/2015-06-03/en

copyright by
LIEBHERR

Description	Value
Main boom angle	80°
Jib length	20 m (65‘ 7“ ft-in) to 68 m (223‘ 1“ ft-in)
Jib angle	66° to 70°

Tab. 398: Parked position of main boom 2821 + luffing jib 2316 (+ auxiliary jib)

Description	Value
Maximum wind speed	18 m/s 59.06 ft/s
Main boom length	20 m (65‘ 7“ ft-in) to 74 m (242‘ 9“ ft-in)
Main boom angle	80°
Jib length	71 m (232‘ 11“ ft-in) to 86 m (282‘ 2“ ft-in)
Jib angle	66° to 70°

Tab. 399: Parked position of main boom 2821 + luffing jib 2316 (+ auxiliary jib)

Note

▶ All combinations with a jib length from 89 m (292‘ ft-in) to 113 m (370‘ 9“ ft-in) must be laid down when the wind speed reaches a value at which work is no longer permitted (see preface of valid load chart).

Parked position of main boom 2821 + luffing jib 1916 (+ auxiliary jib)

Description	Value
Maximum wind speed	22 m/s 72.18 ft/s
Main boom length	20 m (65‘ 7“ ft-in) to 74 m (242‘ 9“ ft-in)
Main boom angle	80°
Jib length	20 m (65‘ 7“ ft-in) to 80 m (262‘ 6“ ft-in)
Jib angle	66° to 70°

Tab. 400: Parked position of main boom 2821 + luffing jib 1916 (+ auxiliary jib)

Description	Value
Maximum wind speed	18 m/s 59.06 ft/s
Main boom length	20 m (65‘ 7“ ft-in) to 74 m (242‘ 9“ ft-in)
Main boom angle	80°

LWN/LR.x/V03.01//Auslieferung/2015-06-03/en

copyright by
LIEBHERR

Description	Value
Jib length	83 m (272‘ 4“ ft-in) to 95 m (311‘ 8“ ft-in)
Jib angle	64° to 70°

Tab. 401: Parked position of main boom 2821 + luffing jib 1916 (+ auxiliary jib)

Parked position of main boom 2821 + luffing jib 2316 + midfall 2316

Description	Value
Maximum wind speed	22 m/s 72.18 ft/s
Main boom length	20 m (65‘ 7“ ft-in) to 71 m (232‘ 11“ ft-in)
Main boom angle	80°
Jib length	38.5 m (126‘ 4“ ft-in) to 65.5 m (214‘ 11“ ft-in)
Jib angle	66° to 70°

Tab. 402: Parked position of main boom 2821 + luffing jib 2316 + midfall 2316

Description	Value
Maximum wind speed	18 m/s 59.06 ft/s
Main boom length	20 m (65‘ 7“ ft-in) to 71 m (232‘ 11“ ft-in)
Main boom angle	80°
Jib length	68.5 m (224‘ 9“ ft-in) to 83.5 m (273‘ 11“ ft-in)
Jib angle	66° to 70°

Tab. 403: Parked position of main boom 2821 + luffing jib 2316 + midfall 2316

Note

▶ All combinations above a jib length of 86.5 m (283‘ 10“ ft-in) must be laid down when the wind speed reaches a value at which work is no longer permitted (see preface of valid load chart).

Parked position of main boom 2821 + luffing jib 1916 + midfall 1916

Description	Value
Maximum wind speed	22 m/s 72.18 ft/s
Main boom length	20 m (65‘ 7“ ft-in) to 74 m (242‘ 9“ ft-in)

LWN/LR.x/V03.01//Auslieferung/2015-06-03/en

copyright by LIEBHERR

Description	Value
Main boom angle	80°
Jib length	32.5 m (106‘ 8“ ft-in) to 77.5 m (254‘ 3“ ft-in)
Jib angle	66° to 70°

Tab. 404: Parked position of main boom 2821 + luffing jib 1916 + midfall 1916

Description	Value
Maximum wind speed	18 m/s 59.06 ft/s
Main boom length	20 m (65‘ 7“ ft-in) to 74 m (242‘ 9“ ft-in)
Main boom angle	80°
Jib length	80.5 m (264‘ 1“ ft-in) to 95.5 m (313‘ 4“ ft-in)
Jib angle	64° to 70°

Tab. 405: Parked position of main boom 2821 + luffing jib 1916 + midfall 1916

Parked position for a machine with derrick equipment*

Parked position main boom 2821 + derrick (+ auxiliary jib)

Description	Value
Maximum wind speed	22 m/s 72.18 ft/s
Main boom length	44 m (144‘ 4“ ft-in) to 98 m (321‘ 6“ ft-in)
Main boom angle	74° to 78°

Tab. 406: Parked position main boom 2821 + derrick (+ auxiliary jib)

Description	Value
Maximum wind speed	20 m/s 65.62 ft/s
Main boom length	101 m (331‘ 4“ ft-in) to 119 m (390‘ 5“ ft-in)
Main boom angle	74° to 78°

Tab. 407: Parked position main boom 2821 + derrick (+ auxiliary jib)

Parked position main boom 2821 + fixed jib 1713 + derrick

Description	Value
Maximum wind speed	22 m/s 72.18 ft/s

LWN/LR.x/V03.01//Auslieferung/2015-06-03/en

copyright by
LIEBHERR

Description	Value
Main boom length	50 m (164‘ ft-in) to 95 m (311‘ 8“ ft-in)
Main boom angle	78° to 80°
Jib length	all
Jib offset	15° or 30°

Tab. 408: Parked position main boom 2821 + fixed jib 1713 + derrick

Description	Value
Maximum wind speed	20 m/s 65.62 ft/s
Main boom length	98 m (321‘ 6“ ft-in) to 110 m (360‘ 11“ ft-in)
Main boom angle	78° to 80°
Jib length	all
Jib offset	15° or 30°

Tab. 409: Parked position main boom 2821 + fixed jib 1713 + derrick

Parked position main boom 2821 + fixed jib 1507 + derrick

Description	Value
Maximum wind speed	22 m/s 72.18 ft/s
Main boom length	44 m (144‘ 4“ ft-in) to 98 m (321‘ 6“ ft-in)
Main boom angle	72° to 80°
Jib offset	28°

Tab. 410: Parked position main boom 2821 + fixed jib 1507 + derrick

Description	Value
Maximum wind speed	20 m/s 65.62 ft/s
Main boom length	101 m (331‘ 4“ ft-in) to 113 m (370‘ 9“ ft-in)
Main boom angle	72° to 80°
Jib offset	28°

Tab. 411: Parked position main boom 2821 + fixed jib 1507 + derrick

Parked position main boom 2821 + fixed jib 0906 + derrick

Description	Value
Maximum wind speed	22 m/s 72.18 ft/s

LWN/LR.x/V03.01//Auslieferung/2015-06-03/en

copyright by
LIEBHERR

Description	Value
Main boom length	44 m (144‘ 4“ ft-in) to 98 m (321‘ 6“ ft-in)
Main boom angle	72° to 80°
Jib offset	30°

Tab. 412: Parked position main boom 2821 + fixed jib 0906 + derrick

Description	Value
Maximum wind speed	20 m/s 65.62 ft/s
Main boom length	101 m (331‘ 4“ ft-in) to 116 m (380‘ 7“ ft-in)
Main boom angle	72° to 80°
Jib offset	30°

Tab. 413: Parked position main boom 2821 + fixed jib 0906 + derrick

Parked position main boom 2821 + luffing jib 2316 + derrick (+ auxiliary jib)

Description	Value
Maximum wind speed	22 m/s 72.18 ft/s
Main boom length	44 m (144‘ 4“ ft-in) to 86 m (282‘ 2“ ft-in)
Main boom angle	80°
Jib length	20 m (65‘ 7“ ft-in) to 50 m (164‘ ft-in)
Jib angle	66° to 70°

Tab. 414: Parked position main boom 2821 + luffing jib 2316 + derrick (+ auxiliary jib)

Description	Value
Maximum wind speed	20 m/s 65.62 ft/s
Main boom length	44 m (144‘ 4“ ft-in) to 86 m (282‘ 2“ ft-in)
Main boom angle	80°
Jib length	53 m (173‘ 11“ ft-in) to 68 m (223‘ 1“ ft-in)
Jib angle	66° to 70°

Tab. 415: Parked position main boom 2821 + luffing jib 2316 + derrick (+ auxiliary jib)

LWN/LR.x/V03.01//Auslieferung/2015-06-03/en

copyright by
LIEBHERR

Description	Value
Maximum wind speed	18 m/s 59.06 ft/s
Main boom length	44 m (144‘ 4“ ft-in) to 86 m (282‘ 2“ ft-in)
Main boom angle	80°
Jib length	71 m (232‘ 11“ ft-in) to 104 m (341‘ 2“ ft-in)
Jib angle	66° to 70°

Tab. 416: Parked position main boom 2821 + luffing jib 2316 + derrick (+ auxiliary jib)

Note

▶ Lay down boom combinations as of a jib length of 107 m (351‘ 1“ ft-in) or a total boom length of 160 m (524‘ 11“ ft-in) if the wind speed reaches a value at which work is no longer permissible (see foreword to valid load chart).

Parked position main boom 2821 + luffing jib 1916 + derrick (+ auxiliary jib)

Description	Value
Maximum wind speed	22 m/s 72.18 ft/s
Main boom length	44 m (144‘ 4“ ft-in) to 92 m (301‘ 10“ ft-in)
Main boom angle	80°
Jib length	20 m (65‘ 7“ ft-in) to 56 m (183‘ 9“ ft-in)
Jib angle	66° to 70°

Tab. 417: Parked position main boom 2821 + luffing jib 1916 + derrick (+ auxiliary jib)

Description	Value
Maximum wind speed	18 m/s 59.06 ft/s
Main boom length	44 m (144‘ 4“ ft-in) to 92 m (301‘ 10“ ft-in)
Main boom angle	80°
Jib length	59 m (193‘ 7“ ft-in) to 80 m (262‘ 6“ ft-in)
Jib angle	66° to 70°

Tab. 418: Parked position main boom 2821 + luffing jib 1916 + derrick (+ auxiliary jib)

LWN/LR.x/V03.01//Auslieferung/2015-06-03/en

copyright by LIEBHERR

Description	Value
Maximum wind speed	14 m/s 45.93 ft/s
Main boom length	44 m (144‘ 4“ ft-in) to 92 m (301‘ 10“ ft-in)
Main boom angle	80°
Jib length	83 m (272‘ 4“ ft-in) to 95 m (311‘ 8“ ft-in)
Jib angle	66° to 70°

Tab. 419: Parked position main boom 2821 + luffing jib 1916 + derrick (+ auxiliary jib)

6.7.4 Laying down the boom

The “laying-down wind speed” for the boom is reached when the maximum permissible wind speeds for the parked position are exceeded or expected to be exceeded.

DANGER
Excessive wind load!
Machine toppling over, structural breakdown.

▶ Lay down entire boom on the ground against the wind before the maximum permissible wind speed is reached.

If it is not possible to lay down with a boom combination including a luffing jib:
▶ Contact Liebherr customer service.

Observe the following safety guidelines and notes:
– Always lay down the entire main boom flat on the ground. Supporting the boom on an undulation always bears a residual danger. If the main boom is not set down completely (but only near the ground), this may lead to the destruction of the boom or the swing brake.
– Always set the main boom down so that it is facing either into or against the wind. If the main boom can only be set down crosswise to the wind direction due to limited space, then it must be set down before the wind reaches the maximum permissible speed.
– In bad weather or if a storm is forecast and work is to be interrupted for a day or more, or if the machine operator and assistants will be absent, as a rule the entire boom must be placed on the ground.
– If it turns out during planning that the boom cannot be set down completely at the site due to a lack of space and danger of a storm: contact the manufacturer in time to arrange special protective measures against storm damage.

Note

Liebherr recommends:
▶ The safest measure is always to lay down the boom.

LWN/LR.x/V03.01//Auslieferung/2015-06-03/en

copyright by LIEBHERR

6.8 Traveling on gradients

DANGER
Incorrect travelling of machine on gradients!
Toppling of machine.

- ▶ Take great care with every travel movement of the machine.
- ▶ Avoid dynamic travel movements.

DANGER
Inadmissible traveling with suspended counterweight on gradients!
Toppling of machine.

- ▶ Deinstall suspended counterweight.
- ▶ Leave pendant ropes on derrick boom.
- ▶ Install maximum rear counterweight and carbody counterweight.

DANGER
Improper traveling with counterweight carriage on gradients!
Toppling of machine.

- ▶ Only travel in trailer mode.
- ▶ Ensure that all wheel sets are in contact with the ground.
- ▶ Ensure that the upward tilt of the counterweight carriage is max. 45%.
- ▶ Ensure that the downward tilt of the counterweight carriage is max. 15%.
- ▶ Ensure that the lateral torsion of the counterweight carriage is max. 3.5%.
- ▶ Remove counterweight slabs from counterweight carriage.
- ▶ Install maximum rear counterweight and carbody counterweight.

The following points must be observed when travelling on gradients:
- The inclination value in % must be measured by qualified personnel and communicated to the machine operator before the machine is moved.
- Lateral gradients must not exceed 1 % when traveling.
- Machine must be fitted with maximum rear counterweight and carbody counterweight.
- Machine can be in narrow track, medium track or wide track.
- Machine may only be moved when the crawlers are in normal gear.
- Uppercarriage is parallel to crawler side frame.
- When driving on an incline, only the installed hook and/or the installed pulley block may be on the boom.
- Specified boom angles:
  - are always relative to the machine's horizontal standing area.
  - must be checked and/or adjusted before an incline is negotiated.

DANGER
Incorrect driving of machine over undulations!
Toppling of machine.

- ▶ When traveling over undulations, the entire crawler must be on the ground.

LWN/LR.x/V03.01//Auslieferung/2015-06-03/en

copyright by
LIEBHERR

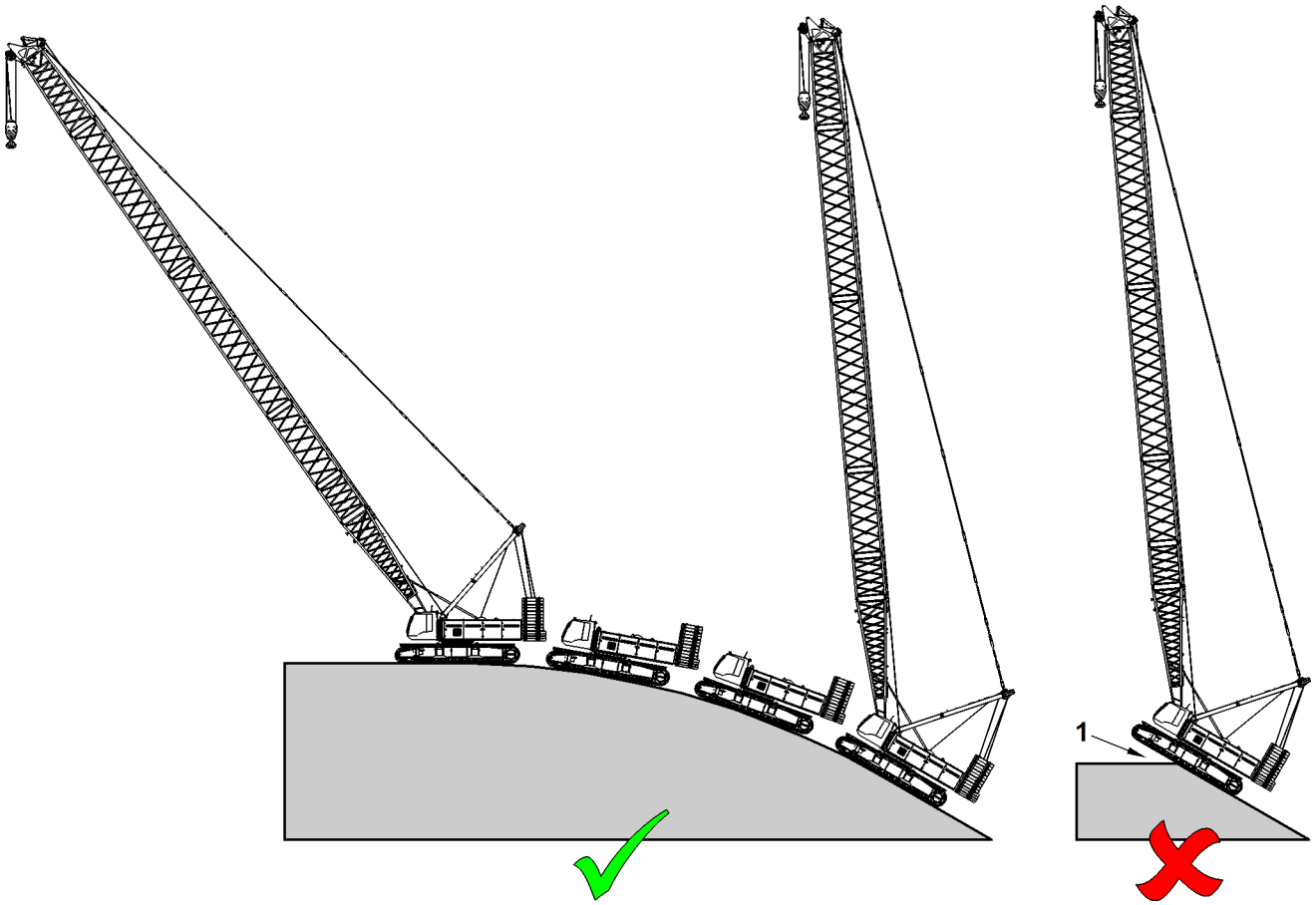

Fig. 2761: Driving over undulations (diagram)

1 Prohibited situation

Note
The following diagrams are purely to illustrate the incline! The boom angles and the inclinations shown in the diagrams do not correspond to the values in the table. All values shown in the table include maximum ballasting!

- ▶ Only use values from the table.
- ▶ If you require values for special combinations: Contact Liebherr customer service.

LWN/LR.x/V03.01//Auslieferung/2015-06-03/en

copyright by
LIEBHERR

6.8.1 Permitted gradient for a machine without derrick equipment*

Permitted gradient main boom 2821 (+ auxiliary jib)

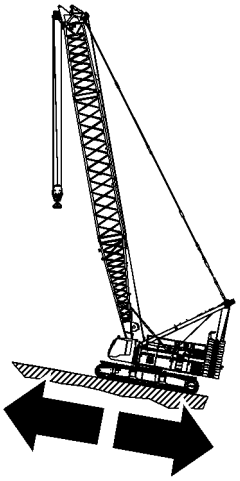

Fig. 2762: Permitted gradient main boom 2821 (+ auxiliary jib), boom travel uphill

Description	Value	
Main boom angle	40°	50°
Main boom length	**max. gradient in %, boom travel uphill**	
20 m (65‘ 7“ ft-in) to 53 m (173‘ 11“ ft-in)	10	-
56 m (183‘ 9“ ft-in) to 104 m (341‘ 2“ ft-in)	-	20

Tab. 420: Permitted gradient main boom 2821 (+ auxiliary jib), boom travel uphill

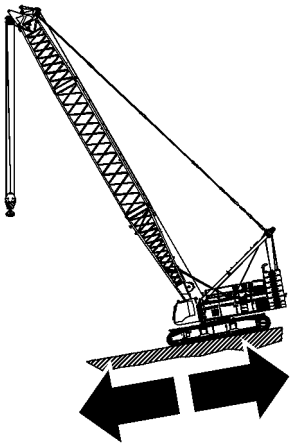

Fig. 2763: Permitted gradient for main boom 2821 (+ auxiliary jib), boom travel downhill

LWN/LR.x/V03.01//Auslieferung/2015-06-03/en

copyright by
LIEBHERR

Description	Value	
Main boom angle	86°	60°
Main boom length	**max. gradient in %, boom travel downhill**	
20 m (65‘ 7“ ft-in) to 53 m (173‘ 11“ ft-in)	-	30
56 m (183‘ 9“ ft-in) to 95 m (311‘ 8“ ft-in)	30	-
98 m (321‘ 6“ ft-in) to 104 m (341‘ 2“ ft-in)	20	-

Tab. 421: Permitted gradient for main boom 2821 (+ auxiliary jib), boom travel downhill

Permitted gradient for main boom 2821 + reducing adapter 2821/2316

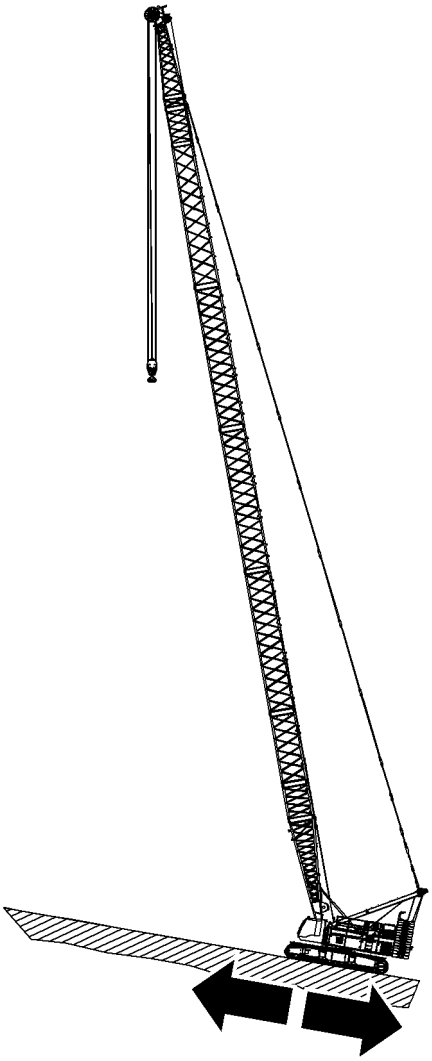

Fig. 2764: Permitted gradient for main boom 2821 + reducing adapter 2821/2316, boom travel uphill

LWN/LR.x/V03.01//Auslieferung/2015-06-03/en

copyright by
LIEBHERR

Description	Value
Main boom angle	50°
Main boom length	**max. gradient in %, boom travel uphill**
69 m (226‘ 5“ ft-in) to 123 m (403‘ 7“ ft-in)	20

Tab. 422: Permitted gradient for main boom 2821 + reducing adapter 2821/2316, boom travel uphill

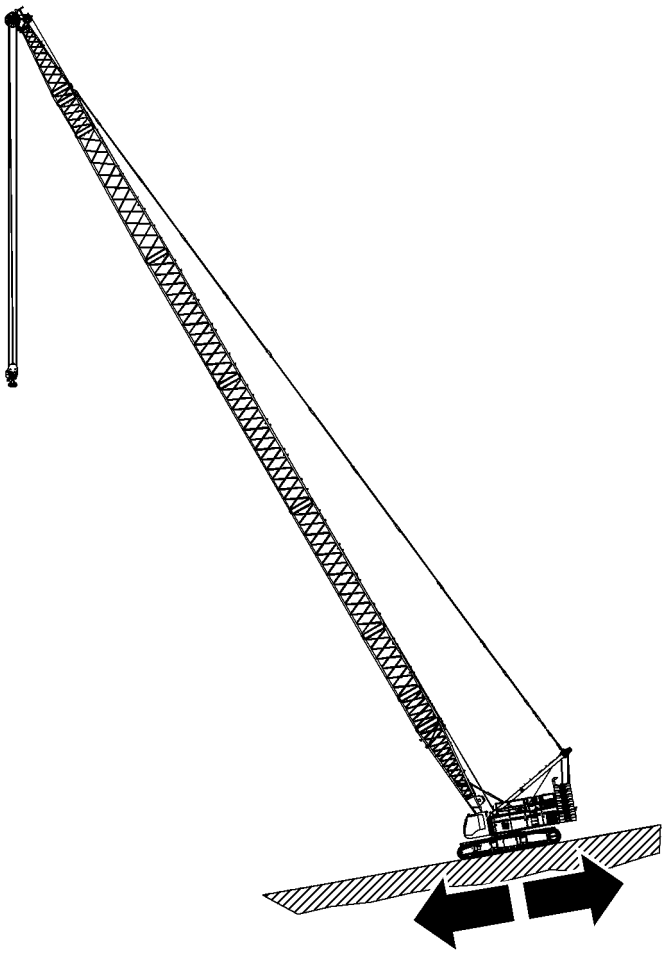

Fig. 2765: Permitted gradient for main boom 2821 + reducing adapter 2821/2316, boom travel downhill

Description	Value
Main boom angle	78°
Main boom length	**max. gradient in %, boom travel downhill**
69 m (226‘ 5“ ft-in) to 78 m (255‘ 11“ ft-in)	30
81 m (265‘ 9“ ft-in) to 114 m (374‘ ft-in)	20

LWN/LR.x/V03.01//Auslieferung/2015-06-03/en

copyright by
LIEBHERR

Description	Value
117 m (383‘ 10“ ft-in) to 123 m (403‘ 7“ ft-in)	10

Tab. 423: Permitted gradient for main boom 2821 + reducing adapter 2821/2316, boom travel downhill

Permitted gradient for main boom 2821 + fixed jib 1713

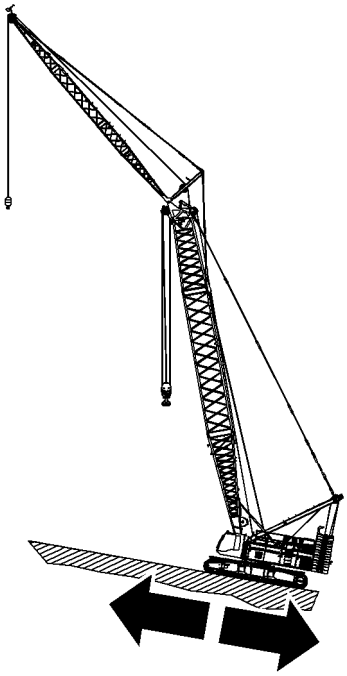

Fig. 2766: Permitted gradient for main boom 2821 + fixed jib 1713, boom travel uphill

Description	Value
Main boom angle	50°
Jib length	all
Jib offset	15° or 30°
Main boom length	**max. gradient in %, boom travel uphill**
20 m (65‘ 7“ ft-in) to 83 m (272‘ 4“ ft-in)	20

Tab. 424: Permitted gradient for main boom 2821 + fixed jib 1713, boom travel uphill

LWN/LR.x/V03.01//Auslieferung/2015-06-03/en

copyright by
LIEBHERR

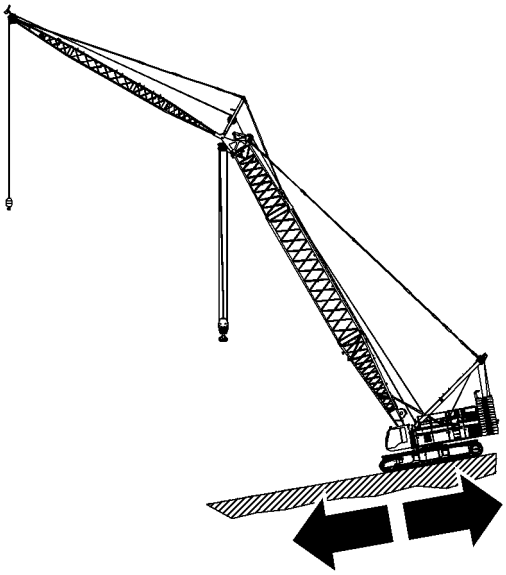

Fig. 2767: Permitted gradient for main boom 2821 + fixed jib 1713, boom travel downhill

Description	**Value**	
Main boom angle	80°	70°
Jib length	all	
Jib offset	15° or 30°	
Main boom length	**max. gradient in %, boom travel downhill**	
20 m (65‘ 7“ ft-in) to 41 m (134‘ 6“ ft-in)	-	30
44 m (144‘ 4“ ft-in) to 80 m (262‘ 6“ ft-in)	20	-
83 m 272‘ 4“ ft-in	10	-

Tab. 425: Permitted gradient for main boom 2821 + fixed jib 1713, boom travel downhill

LWN/LR.x/V03.01//Auslieferung/2015-06-03/en

copyright by
LIEBHERR

Permitted gradient for main boom 2821 + fixed jib 1507

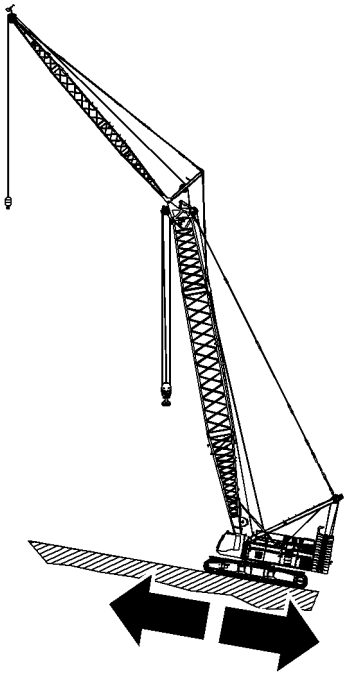

Fig. 2768: Permitted gradient for main boom 2821 + fixed jib 1507, boom travel uphill

Description	Value	
Main boom angle	40°	50°
Jib offset	28°	
Main boom length	**max. gradient in %, boom travel uphill**	
20 m (65‘ 7“ ft-in) to 38 m (124‘ 8“ ft-in)	20	-
41 m (134‘ 6“ ft-in) to 86 m (282‘ 2“ ft-in)	-	20

Tab. 426: Permitted gradient for main boom 2821 + fixed jib 1507, boom travel uphill

LWN/LR.x/V03.01//Auslieferung/2015-06-03/en

copyright by
LIEBHERR

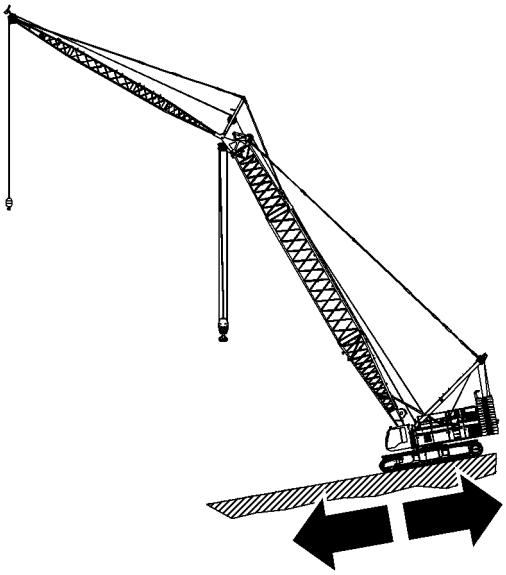

Fig. 2769: Permitted gradient for main boom 2821 + fixed jib 1507, boom travel downhill

Description	**Value**	
Main boom angle	80°	70°
Jib offset	28°	
Main boom length	**max. gradient in %, boom travel downhill**	
20 m (65‘ 7“ ft-in) to 38 m (124‘ 8“ ft-in)	-	30
41 m (134‘ 6“ ft-in) to 86 m (282‘ 2“ ft-in)	20	-

Tab. 427: Permitted gradient for main boom 2821 + fixed jib 1507, boom travel downhill

LWN/LR.x/V03.01//Auslieferung/2015-06-03/en

copyright by
LIEBHERR

Permitted gradient for main boom 2821 + fixed jib 1008

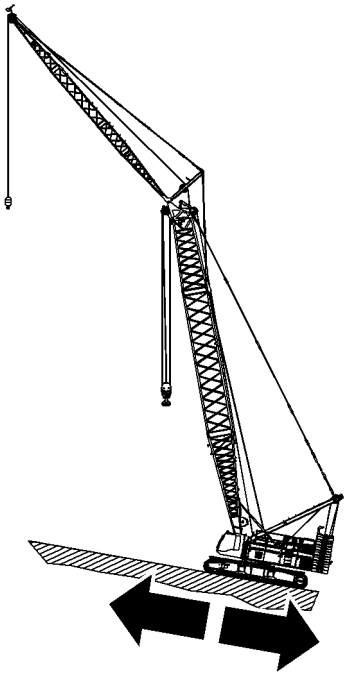

Fig. 2770: Permitted gradient for main boom 2821 + fixed jib 1008, boom travel uphill

Description	Value	
Main boom angle	40°	50°
Jib length	all	
Jib offset	15° or 30°	
Main boom length	**max. gradient in %, boom travel uphill**	
20 m (65‘ 7“ ft-in) to 41 m (134‘ 6“ ft-in)	20	-
44 m (144‘ 4“ ft-in) to 86 m (282‘ 2“ ft-in)	-	20

Tab. 428: Permitted gradient for main boom 2821 + fixed jib 1008, boom travel uphill

LWN/LR.x/V03.01//Auslieferung/2015-06-03/en

copyright by
LIEBHERR

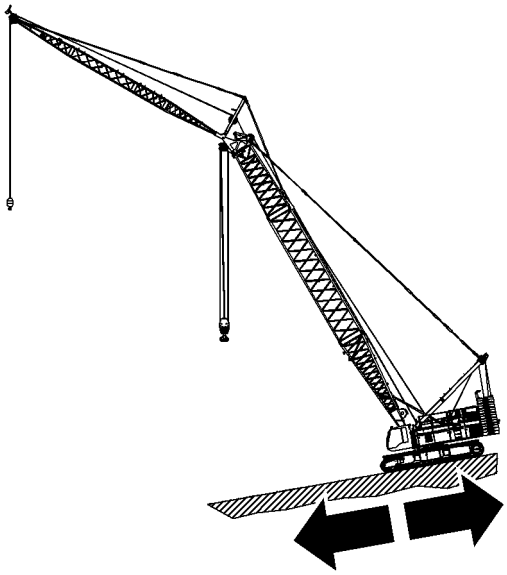

Fig. 2771: Permitted gradient for main boom 2821 + fixed jib 1008, boom travel downhill

Description	**Value**	
Main boom angle	80°	70°
Jib length	all	
Jib offset	15° or 30°	
Main boom length	**max. gradient in %, boom travel downhill**	
20 m (65‘ 7“ ft-in) to 41 m (134‘ 6“ ft-in)	-	30
44 m (144‘ 4“ ft-in) to 83 m (272‘ 4“ ft-in)	20	-
86 m 282‘ 2“ ft-in	10	-

Tab. 429: Permitted gradient for main boom 2821 + fixed jib 1008, boom travel downhill

LWN/LR.x/V03.01//Auslieferung/2015-06-03/en

copyright by
LIEBHERR

Permitted gradient for main boom 2821 + fixed jib 0906

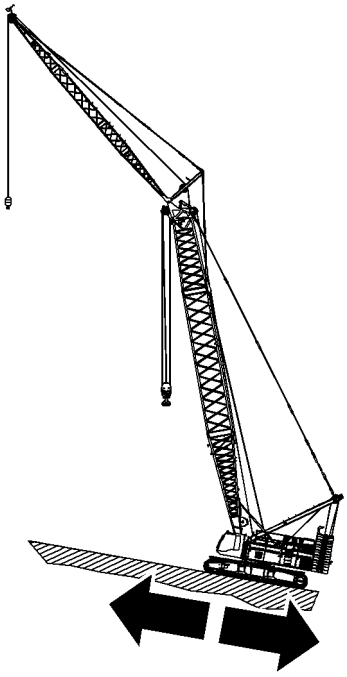

Fig. 2772: Permitted gradient for main boom 2821 + fixed jib 0906, boom travel uphill

Description	Value	
Main boom angle	40°	50°
Jib offset	30°	
Main boom length	**max. gradient in %, boom travel uphill**	
20 m (65‘ 7“ ft-in) to 38 m (124‘ 8“ ft-in)	20	-
41 m (134‘ 6“ ft-in) to 95 m (311‘ 8“ ft-in)	-	20

Tab. 430: Permitted gradient for main boom 2821 + fixed jib 0906, boom travel uphill

LWN/LR.x/V03.01//Auslieferung/2015-06-03/en

copyright by
LIEBHERR

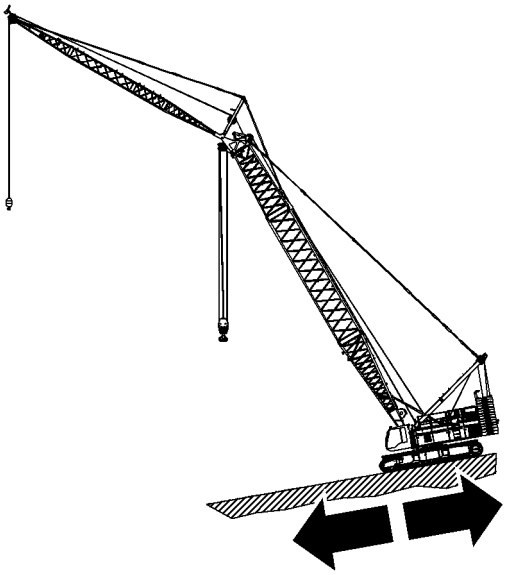

Fig. 2773: Permitted gradient for main boom 2821 + fixed jib 0906, boom travel downhill

Description	**Value**	
Main boom angle	80°	70°
Jib offset	30°	
Main boom length	**max. gradient in %, boom travel downhill**	
20 m (65‘ 7“ ft-in) to 38 m (124‘ 8“ ft-in)	-	30
41 m (134‘ 6“ ft-in) to 95 m (311‘ 8“ ft-in)	20	-

Tab. 431: Permitted gradient for main boom 2821 + fixed jib 0906, boom travel downhill

LWN/LR.x/V03.01//Auslieferung/2015-06-03/en

copyright by
LIEBHERR

Permitted gradient for main boom 2821 + luffing jib 2316 (+ auxiliary jib)

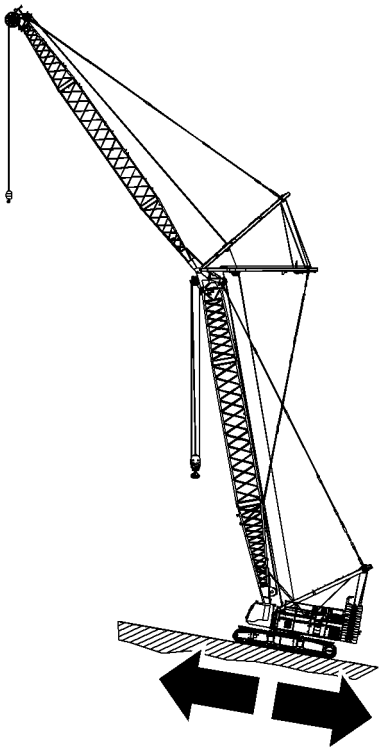

Fig. 2774: Permitted gradient for main boom 2821 + luffing jib 2316 (+ auxiliary jib), boom travel uphill

Description	Value	
Main boom angle	45°	65°
Jib angle	15°	25°
Jib length	20 m (65‘ 7“ ft-in) to 47 m (154‘ 2“ ft-in)	50 m (164‘ ft-in) to 113 m (370‘ 9“ ft-in)
Main boom length	**max. gradient in %, boom travel uphill**	
20 m (65‘ 7“ ft-in) to 71 m (232‘ 11“ ft-in)	15	20

Tab. 432: Permitted gradient for main boom 2821 + luffing jib 2316 (+ auxiliary jib), boom travel uphill

LWN/LR.x/V03.01//Auslieferung/2015-06-03/en

copyright by
LIEBHERR

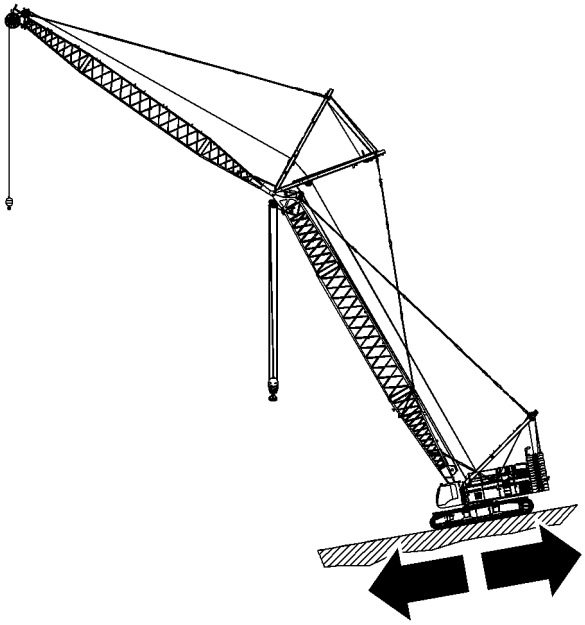

Fig. 2775: Permitted gradient for main boom 2821 + luffing jib 2316 (+ auxiliary jib), boom travel downhill

Description	**Value**		
Main boom angle	83°		
Jib angle	73°		
Jib length	20 m (65‘ 7“ ft-in) to 86 m (282‘ 2“ ft-in)	20 m (65‘ 7“ ft-in) to 47 m (154‘ 2“ ft-in)	50 m (164‘ ft-in) to 86 m (282‘ 2“ ft-in)
Main boom length	**max. gradient in %, boom travel downhill**		
20 m (65‘ 7“ ft-in) to 35 m (114‘ 10“ ft-in)	20	-	-
38 m (124‘ 8“ ft-in) to 71 m (232‘ 11“ ft-in)	-	20	10

Tab. 433: Permitted gradient for main boom 2821 + luffing jib 2316 (+ auxiliary jib), boom travel downhill

LWN/LR.x/V03.01//Auslieferung/2015-06-03/en

copyright by LIEBHERR

Permitted gradient for main boom 2821 + luffing jib 2316 + Midfall 2316

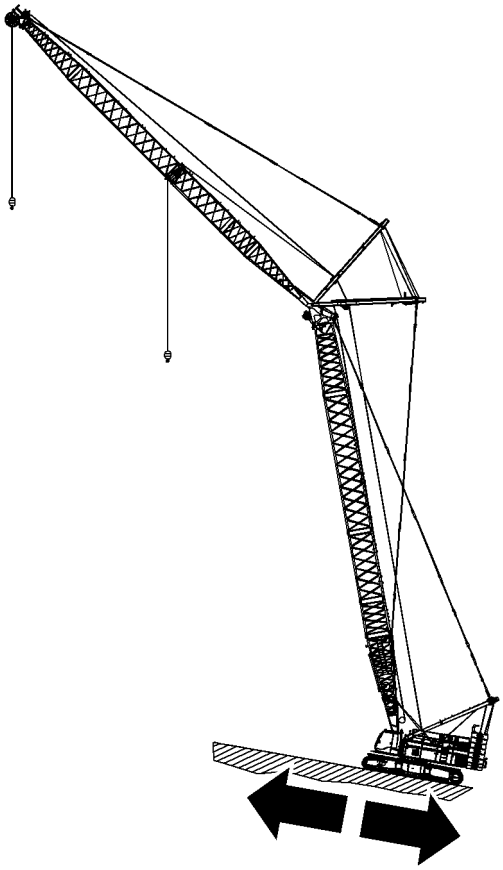

Fig. 2776: Permitted gradient for main boom 2821 + luffing jib 2316 + midfall 2316, boom travel uphill

Description	Value	
Main boom angle	45°	65°
Jib angle	15°	25°
Jib length	20 m (65‘ 7“ ft-in) to 47 m (154‘ 2“ ft-in)	50 m (164‘ ft-in) to 113 m (370‘ 9“ ft-in)
Main boom length	**max. gradient in %, boom travel uphill**	
20 m (65‘ 7“ ft-in) to 71 m (232‘ 11“ ft-in)	15	20

Tab. 434: Permitted gradient for main boom 2821 + luffing jib 2316 + midfall 2316, boom travel uphill

LWN/LR.x/V03.01//Auslieferung/2015-06-03/en

copyright by LIEBHERR

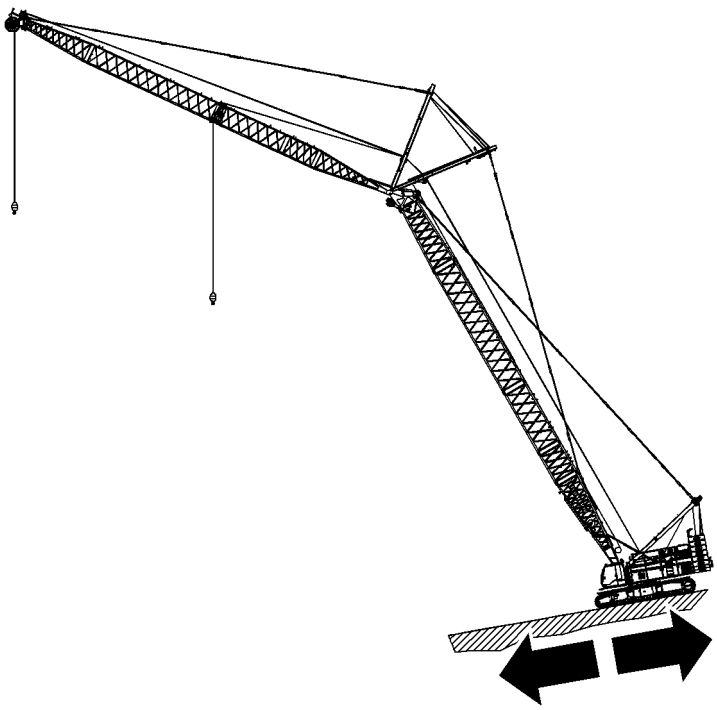

Fig. 2777: Permitted gradient for main boom 2821 + luffing jib 2316 + Midfall 2316, boom travel downhill

Description	**Value**		
Main boom angle	83°		
Jib angle	73°		
Jib length	20 m (65‘ 7“ ft-in) to 86 m (282‘ 2“ ft-in)	20 m (65‘ 7“ ft-in) to 47 m (154‘ 2“ ft-in)	50 m (164‘ ft-in) to 86 m (282‘ 2“ ft-in)
Main boom length	**max. gradient in %, boom travel downhill**		
20 m (65‘ 7“ ft-in) to 35 m (114‘ 10“ ft-in)	20	-	-
38 m (124‘ 8“ ft-in) to 71 m (232‘ 11“ ft-in)	-	20	10

Tab. 435: Permitted gradient for main boom 2821 + luffing jib 2316 + Midfall 2316, boom travel downhill

LWN/LR.x/V03.01//Auslieferung/2015-06-03/en

copyright by LIEBHERR

Permitted gradient for main boom 2821 + luffing jib 1916 (+ auxiliary jib)

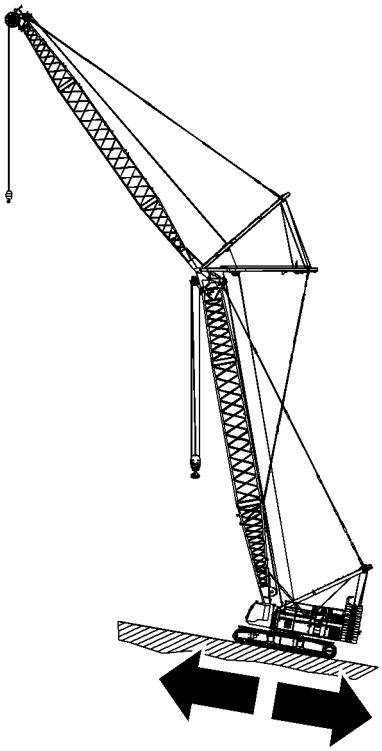

Fig. 2778: Permitted gradient for main boom 2821 + luffing jib 1916 (+ auxiliary jib), boom travel uphill

Description	Value	
Main boom angle	45°	65°
Jib angle	15°	25°
Jib length	20 m (65‘ 7“ ft-in) to 47 m (154‘ 2“ ft-in)	50 m (164‘ ft-in) to 95 m (311‘ 8“ ft-in)
Main boom length	**max. gradient in %, boom travel uphill**	
29 m (95‘ 2“ ft-in) to 74 m (242‘ 9“ ft-in)	20	20

Tab. 436: Permitted gradient for main boom 2821 + luffing jib 1916 (+ auxiliary jib), boom travel uphill

LWN/LR.x/V03.01//Auslieferung/2015-06-03/en

copyright by
LIEBHERR

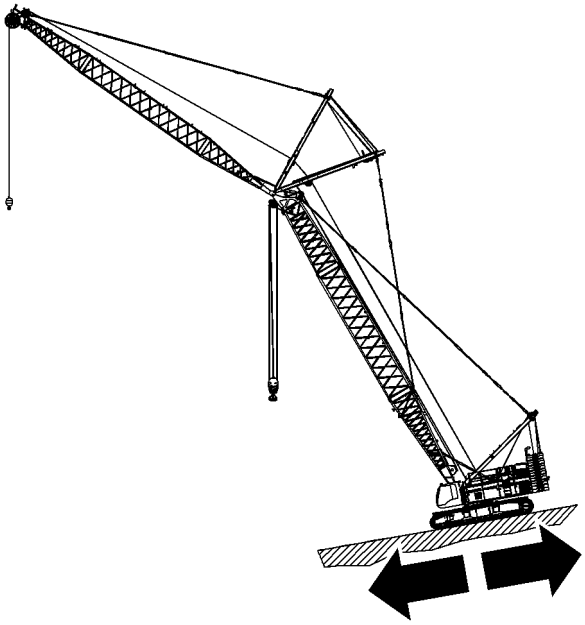

Fig. 2779: Permitted gradient for main boom 2821 + luffing jib 1916 (+ auxiliary jib), boom travel downhill

Description	**Value**			
Main boom angle	75°	88°	88°	88°
Jib angle	70°	78°	78°	78°
Jib length	20 m (65‘ 7“ ft-in) to 47 m (154‘ 2“ ft-in)	20 m (65‘ 7“ ft-in) to 47 m (154‘ 2“ ft-in)	50 m (164‘ ft-in) to 68 m (223‘ 1“ ft-in)	71 m (232‘ 11“ ft-in) to 95 m (311‘ 8“ ft-in)
Main boom length	**max. gradient in %, boom travel downhill**			
29 m (95‘ 2“ ft-in) to 50 m (164‘ ft-in)	20	-	-	-
53 m (173‘ 11“ ft-in) to 74 m (242‘ 9“ ft-in)	-	20	-	-
29 m (95‘ 2“ ft-in) to 74 m (242‘ 9“ ft-in)	-	-	20	10

Tab. 437: Permitted gradient for main boom 2821 + luffing jib 1916 (+ auxiliary jib), boom travel downhill

LWN/LR.x/V03.01//Auslieferung/2015-06-03/en

copyright by LIEBHERR

Permitted gradient for main boom 2821 + luffing jib 1916 + Midfall 1916

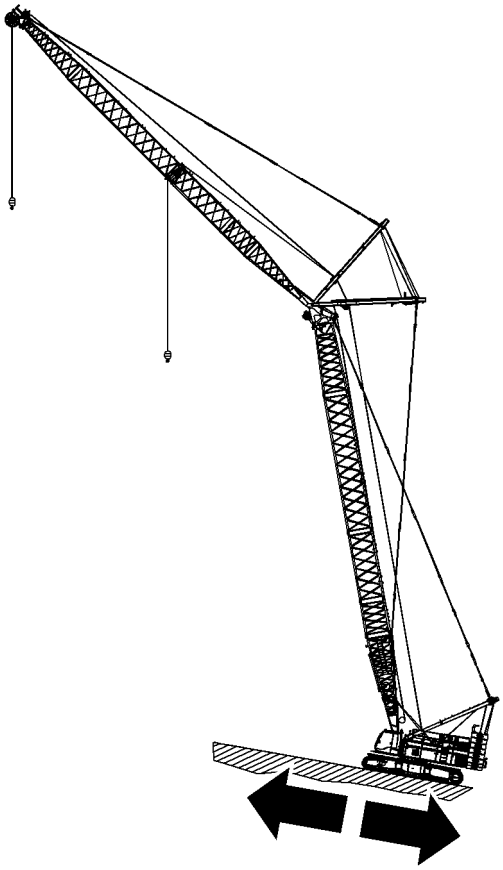

Fig. 2780: Permitted gradient for main boom 2821 + luffing jib 1916 + midfall 1916, boom travel uphill

Description	Value	
Main boom angle	45°	65°
Jib angle	15°	25°
Jib length	20 m (65‘ 7“ ft-in) to 47 m (154‘ 2“ ft-in)	50 m (164‘ ft-in) to 95 m (311‘ 8“ ft-in)
Main boom length	**max. gradient in %, boom travel uphill**	
29 m (95‘ 2“ ft-in) to 74 m (242‘ 9“ ft-in)	20	20

Tab. 438: Permitted gradient for main boom 2821 + luffing jib 1916 + midfall 1916, boom travel uphill

LWN/LR.x/V03.01//Auslieferung/2015-06-03/en

copyright by
LIEBHERR

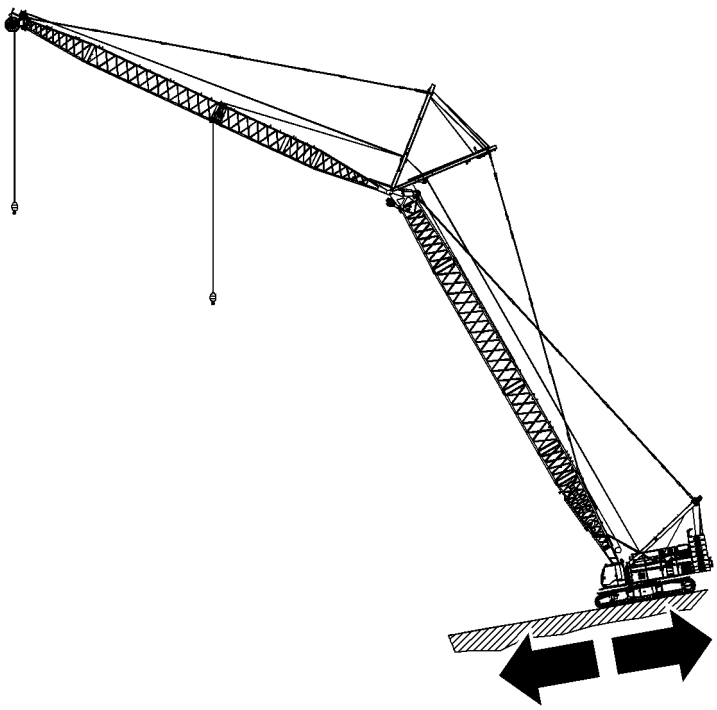

Fig. 2781: Permitted gradient for main boom 2821 + luffing jib 1916 + Midfall 1916, boom travel downhill

Description	**Value**			
Main boom angle	75°	88°	88°	88°
Jib angle	70°	78°	78°	78°
Jib length	20 m (65‘ 7“ ft-in) to 47 m (154‘ 2“ ft-in)	20 m (65‘ 7“ ft-in) to 47 m (154‘ 2“ ft-in)	50 m (164‘ ft-in) to 68 m (223‘ 1“ ft-in)	71 m (232‘ 11“ ft-in) to 95 m (311‘ 8“ ft-in)
Main boom length	**max. gradient in %, boom travel downhill**			
29 m (95‘ 2“ ft-in) to 50 m (164‘ ft-in)	20	-	-	-
53 m (173‘ 11“ ft-in) to 74 m (242‘ 9“ ft-in)	-	20	-	-
29 m (95‘ 2“ ft-in) to 74 m (242‘ 9“ ft-in)	-	-	20	10

Tab. 439: Permitted gradient for main boom 2821 + luffing jib 1916 + Midfall 1916, boom travel downhill

LWN/LR.x/V03.01//Auslieferung/2015-06-03/en

copyright by LIEBHERR

6.8.2 Permitted gradient for a machine with derrick equipment*

Permitted gradient for main boom 2821 + derrick (+ auxiliary jib)

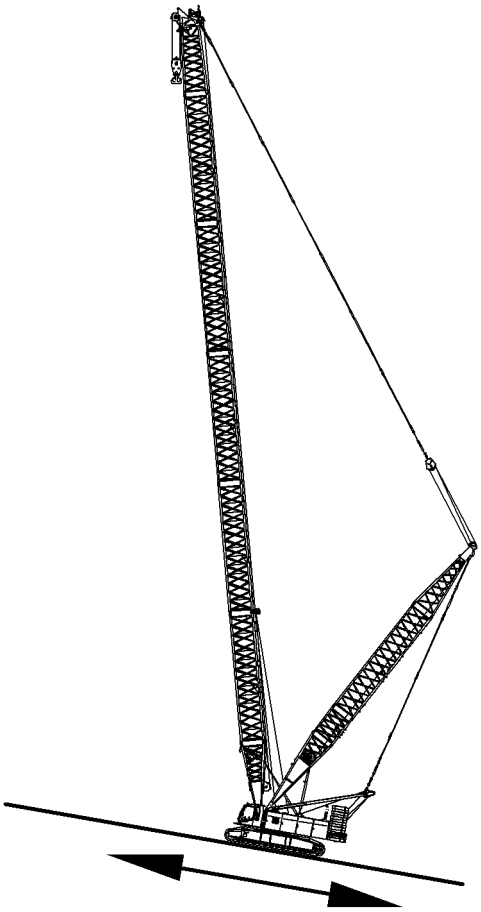

Fig. 2782: Permitted gradient - main boom 2821 + derrick (+ auxiliary jib), boom travel uphill

Description	Value
Lifting capacity (empty hook)	1.5 t (3,307 lb) to 3 t (6,614 lb)
Main boom angle	50°
Main boom length	**max. gradient in %, boom travel uphill**
44 m (144‘ 4“ ft-in) to 74 m (242‘ 9“ ft-in)	15
77 m (252‘ 7“ ft-in) to 98 m (321‘ 6“ ft-in)	15
101 m (331‘ 4“ ft-in) to 119 m (390‘ 5“ ft-in)	-

Tab. 440: Permitted gradient - main boom 2821 + derrick (+ auxiliary jib), boom travel uphill

LWN/LR.x/V03.01//Auslieferung/2015-06-03/en

copyright by
LIEBHERR

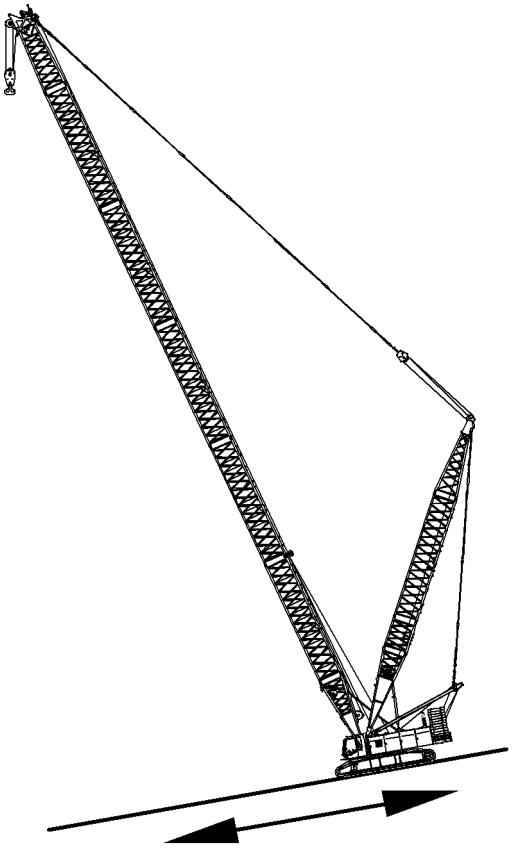

Fig. 2783: Permitted gradient for main boom 2821 + derrick (+ auxiliary jib), boom travel downhill

Description	Value
Lifting capacity (empty hook)	1.5 t (3,307 lb) to 3 t (6,614 lb)
Main boom angle	78°
Main boom length	**max. gradient in %, boom travel downhill**
44 m (144‘ 4“ ft-in) to 74 m (242‘ 9“ ft-in)	30
77 m (252‘ 7“ ft-in) to 98 m (321‘ 6“ ft-in)	20
101 m (331‘ 4“ ft-in) to 119 m (390‘ 5“ ft-in)	10

Tab. 441: Permitted gradient for main boom 2821 + derrick (+ auxiliary jib), boom travel downhill

LWN/LR.x/V03.01//Auslieferung/2015-06-03/en

copyright by
LIEBHERR

Permitted gradient for main boom 2821 + fixed jib 0906 + derrick

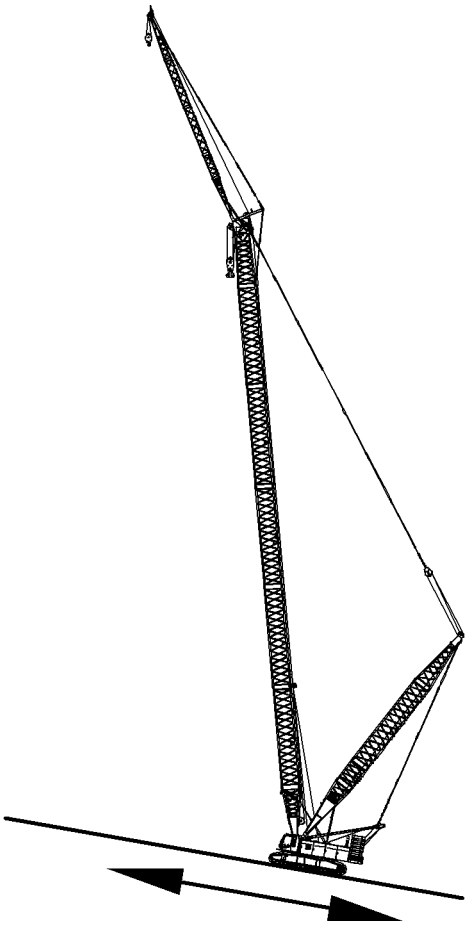

Fig. 2784: Permitted gradient for main boom 2821 + fixed jib 0906 + derrick, boom travel uphill

Description	Value	
Lifting capacity (empty hook)	1.5 t (3,307 lb) to 3 t (6,614 lb)	
Main boom angle	40°	50°
Jib offset	30°	
Main boom length	**max. gradient in %, boom travel uphill**	
50 m (164‘ ft-in) to 59 m (193‘ 7“ ft-in)	20	-
62 m (203‘ 5“ ft-in) to 80 m (262‘ 6“ ft-in)	-	20
83 m (272‘ 4“ ft-in) to 116 m (380‘ 7“ ft-in)	-	20

Tab. 442: Permitted gradient for main boom 2821 + fixed jib 0906 + derrick, boom travel uphill

LWN/LR.x/V03.01//Auslieferung/2015-06-03/en

copyright by
LIEBHERR

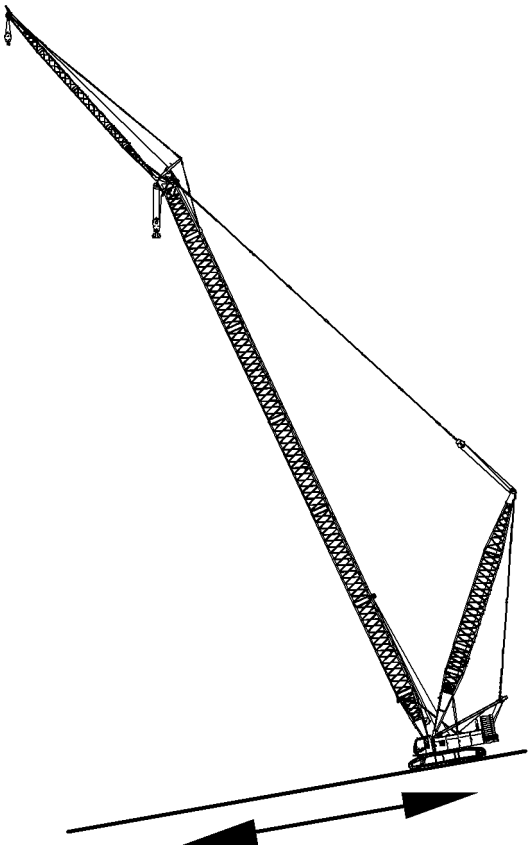

Fig. 2785: Permitted gradient for main boom 2821 + fixed jib 0906 + derrick, boom travel downhill

Description	Value	
Lifting capacity (empty hook)	1.5 t (3,307 lb) to 3 t (6,614 lb)	
Main boom angle	80°	86°
Jib offset	30°	
Main boom length	**max. gradient in %, boom travel downhill**	
50 m (164‘ ft-in) to 59 m (193‘ 7“ ft-in)	30	-
62 m (203‘ 5“ ft-in) to 80 m (262‘ 6“ ft-in)	20	-
83 m (272‘ 4“ ft-in) to 116 m (380‘ 7“ ft-in)	-	10

Tab. 443: Permitted gradient for main boom 2821 + fixed jib 0906 + derrick, boom travel downhill

LWN/LR.x/V03.01//Auslieferung/2015-06-03/en

copyright by
LIEBHERR

Permitted gradient for main boom 2821 + fixed jib 1507 + derrick

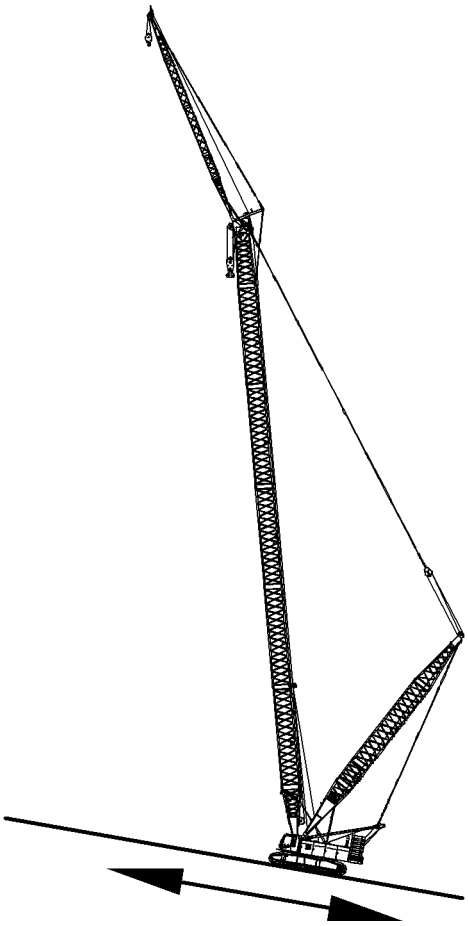

Fig. 2786: Permitted gradient for main boom 2821 + fixed jib 1507 + derrick, boom travel uphill

Description	Value	
Lifting capacity (empty hook)	1.5 t (3,307 lb) to 3 t (6,614 lb)	
Main boom angle	40°	50°
Jib offset	28°	
Main boom length	**max. gradient in %, boom travel uphill**	
44 m (144‘ 4“ ft-in) to 80 m (262‘ 6“ ft-in)	20	-
83 m (272‘ 4“ ft-in) to 113 m (370‘ 9“ ft-in)	-	20

Tab. 444: Permitted gradient for main boom 2821 + fixed jib 1507 + derrick, boom travel uphill

LWN/LR.x/V03.01//Auslieferung/2015-06-03/en

copyright by LIEBHERR

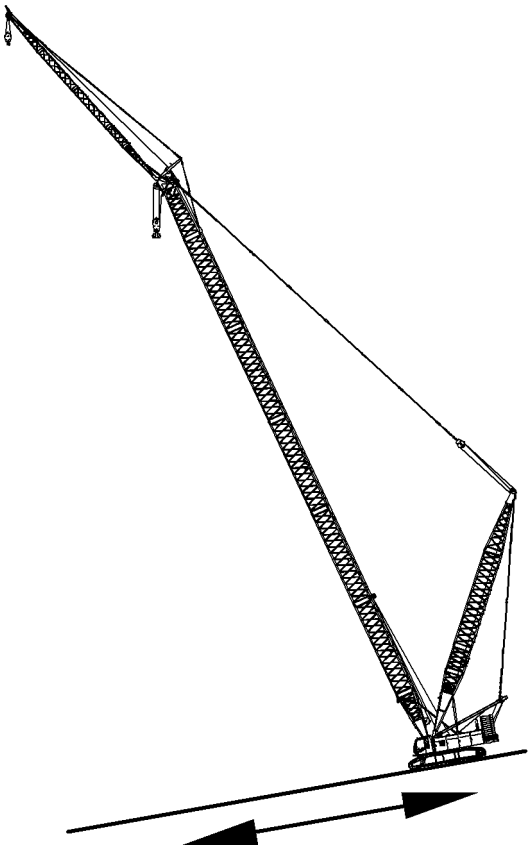

Fig. 2787: Permitted gradient for main boom 2821 + fixed jib 1507 + derrick, boom travel downhill

Description	Value	
Lifting capacity (empty hook)	1.5 t (3,307 lb) to 3 t (6,614 lb)	
Main boom angle	80°	86°
Jib offset	28°	
Main boom length	**max. gradient in %, boom travel downhill**	
44 m (144‘ 4“ ft-in) to 80 m (262‘ 6“ ft-in)	20	-
83 m (272‘ 4“ ft-in) to 113 m (370‘ 9“ ft-in)	-	10

Tab. 445: Permitted gradient for main boom 2821 + fixed jib 1507 + derrick, boom travel downhill

LWN/LR.x/V03.01//Auslieferung/2015-06-03/en

copyright by
LIEBHERR

Permitted gradient for main boom 2821 + fixed jib 1713 + derrick

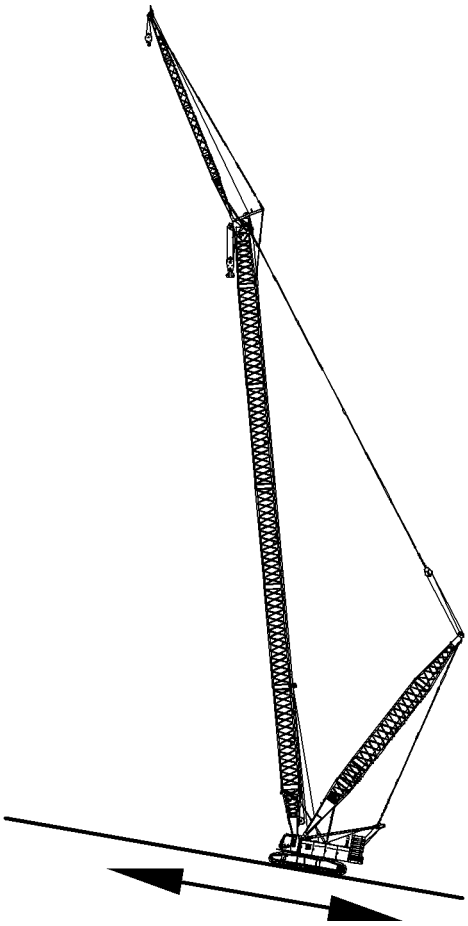

Fig. 2788: Permitted gradient for main boom 2821 + fixed jib 1713 + derrick, boom travel uphill

Description	Value	
Lifting capacity (empty hook)	1.5 t (3,307 lb) to 3 t (6,614 lb)	
Main boom angle	40°	50°
Jib offset	15° or 30°	
Jib length	all	
Main boom length	**max. gradient in %, boom travel uphill**	
50 m (164‘ ft-in) to 59 m (193‘ 7“ ft-in)	20	-
62 m (203‘ 5“ ft-in) to 95 m (311‘ 8“ ft-in)	-	20
98 m (321‘ 6“ ft-in) to 110 m (360‘ 11“ ft-in)	-	20

Tab. 446: Permitted gradient for main boom 2821 + fixed jib 1713 + derrick, boom travel uphill

LWN/LR.x/V03.01//Auslieferung/2015-06-03/en

copyright by
LIEBHERR

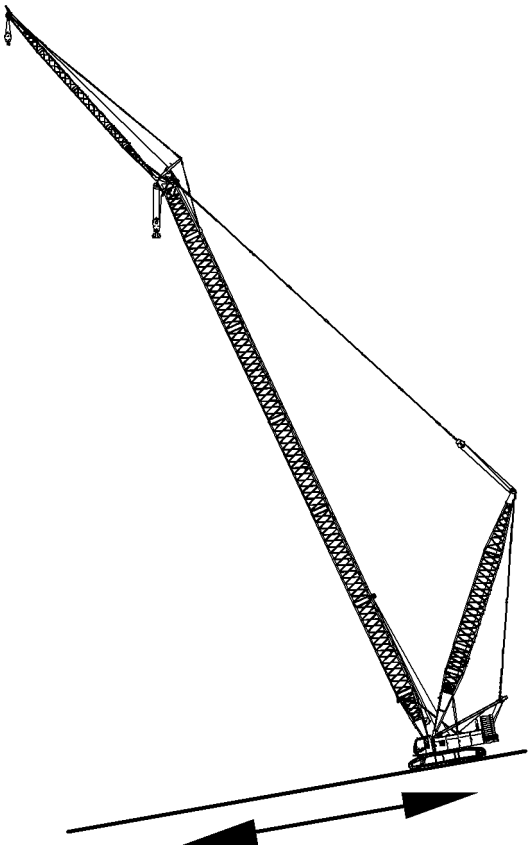

Fig. 2789: Permitted gradient for main boom 2821 + fixed jib 1713 + derrick, boom travel downhill

Description	**Value**	
Lifting capacity (empty hook)	1.5 t (3,307 lb) to 3 t (6,614 lb)	
Main boom angle	80°	86°
Jib offset	15° or 30°	
Jib length	all	
Main boom length	**max. gradient in %, boom travel downhill**	
50 m (164‘ ft-in) to 59 m (193‘ 7“ ft-in)	30	-
62 m (203‘ 5“ ft-in) to 95 m (311‘ 8“ ft-in)	-	20
98 m (321‘ 6“ ft-in) to 110 m (360‘ 11“ ft-in)	-	10

Tab. 447: Permitted gradient for main boom 2821 + fixed jib 1713 + derrick, boom travel downhill

LWN/LR.x/V03.01//Auslieferung/2015-06-03/en

copyright by
LIEBHERR

Permitted gradient for main boom 2821 + luffing jib 1916 + derrick (+ auxiliary jib)

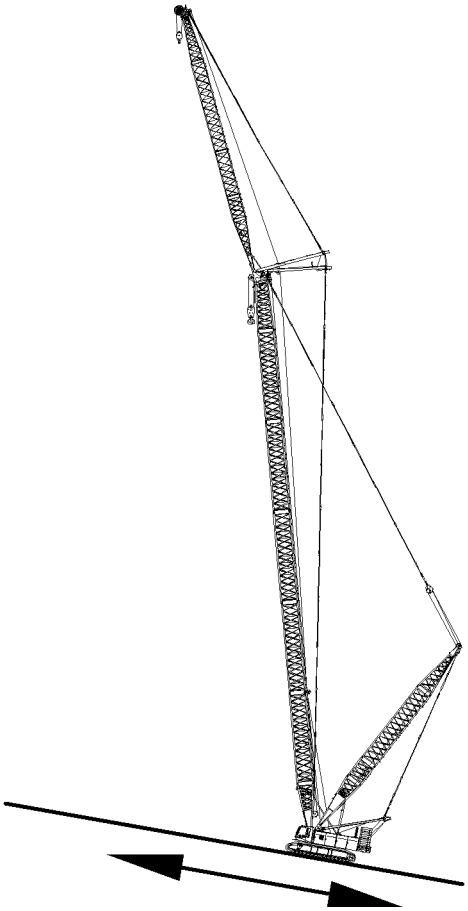

Fig. 2790: Permitted gradient for main boom 2821 + luffing jib 1916 + derrick (+ auxiliary jib), boom travel uphill

Description	**Value**					
Lifting capacity (empty hook)	1.5 t (3,307 lb) to 3 t (6,614 lb)					
Main boom angle	65°					
Jib angle	25°					
Jib length	20 m (65‘ 7“ ft-in) to 32 m (105‘ ft-in)	35 m (114‘ 10“ ft-in) to 44 m (144‘ 4“ ft-in)	47 m (154‘ 2“ ft-in) to 56 m (183‘ 9“ ft-in)	59 m (193‘ 7“ ft-in) to 68 m (223‘ 1“ ft-in)	71 m (232‘ 11“ ft-in) to 80 m (262‘ 6“ ft-in)	83 m (272‘ 4“ ft-in) to 95 m (311‘ 8“ ft-in)
Main boom length	**max. gradient in %, boom travel uphill**					
44 m (144‘ 4“ ft-in) to 56 m (183‘ 9“ ft-in)	15	15	15	15	15	-
59 m (193‘ 7“ ft-in) to 68 m (223‘ 1“ ft-in)	15	15	15	-	-	-
71 m (232‘ 11“ ft-in) to 80 m (262‘ 6“ ft-in)	15	15	-	-	-	-

LWN/LR.x/V03.01//Auslieferung/2015-06-03/en

copyright by LIEBHERR

Description	Value					
83 m (272‘ 4“ ft-in) to 92 m (301‘ 10“ ft-in)	15	-	-	-	-	-

Tab. 448: Permitted gradient for main boom 2821 + luffing jib 1916 + derrick (+ auxiliary jib), boom travel uphill

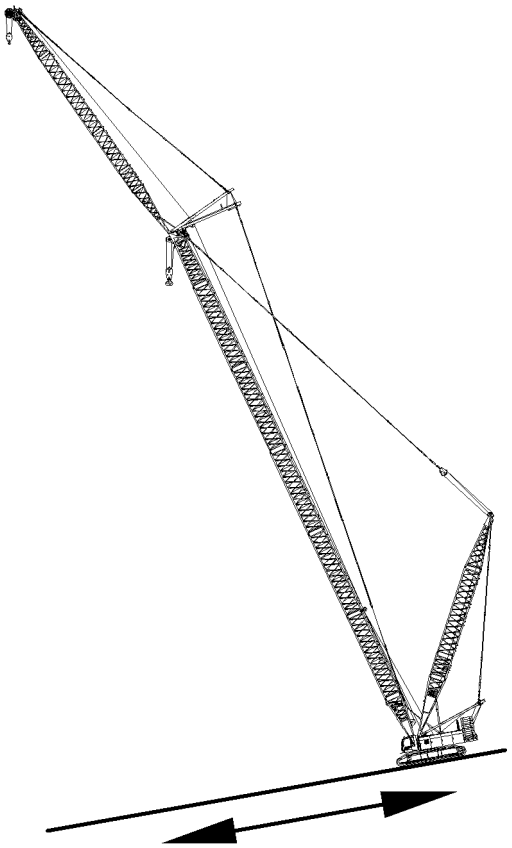

Fig. 2791: Permitted gradient for main boom 2821 + luffing jib 1916 + derrick (+ auxiliary jib), boom travel uphill

Description	Value					
Lifting capacity (empty hook)	1.5 t (3,307 lb) to 3 t (6,614 lb)					
Main boom angle	83°					
Jib angle	73°					
Jib length	20 m (65‘ 7“ ft-in) to 32 m (105‘ ft-in)	35 m (114‘ 10“ ft-in) to 44 m (144‘ 4“ ft-in)	47 m (154‘ 2“ ft-in) to 56 m (183‘ 9“ ft-in)	59 m (193‘ 7“ ft-in) to 68 m (223‘ 1“ ft-in)	71 m (232‘ 11“ ft-in) to 80 m (262‘ 6“ ft-in)	83 m (272‘ 4“ ft-in) to 95 m (311‘ 8“ ft-in)
Main boom length	**max. gradient in %, boom travel downhill**					
44 m (144‘ 4“ ft-in) to 56 m (183‘ 9“ ft-in)	30	25	20	15	10	5
59 m (193‘ 7“ ft-in) to 68 m (223‘ 1“ ft-in)	25	20	15	10	5	5
71 m (232‘ 11“ ft-in) to 80 m (262‘ 6“ ft-in)	15	15	10	5	5	-

LWN/LR.x/V03.01//Auslieferung/2015-06-03/en

copyright by LIEBHERR

Description	Value					
83 m (272‘ 4“ ft-in) to 92 m (301‘ 10“ ft-in)	10	10	5	5	-	-

Tab. 449: Permitted gradient for main boom 2821 + luffing jib 1916 + derrick (+ auxiliary jib), boom travel downhill

Permitted gradient for main boom 2821 + luffing jib 2316 + derrick (+ auxiliary jib)

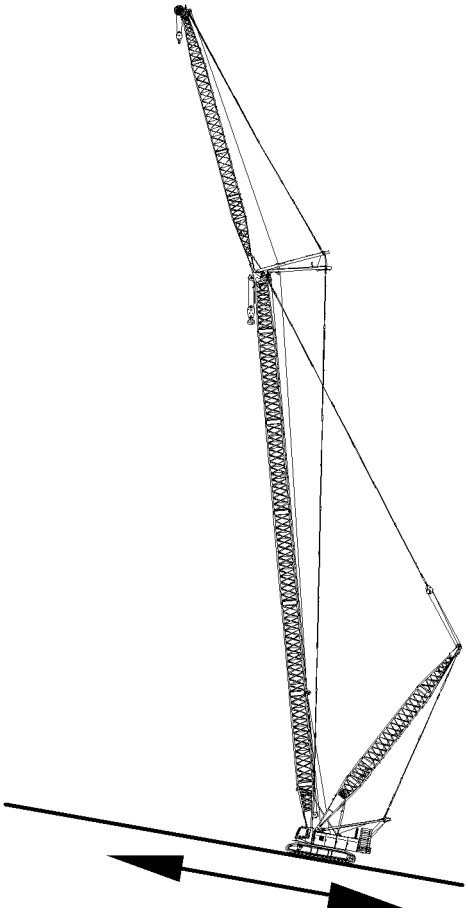

Fig. 2792: Permitted gradient for main boom 2821 + luffing jib 2316 + derrick (+ auxiliary jib), boom travel uphill

Description	Value					
Lifting capacity (empty hook)	1.5 t (3,307 lb) to 3 t (6,614 lb)					
Main boom angle	65°					
Jib angle	25°					
Jib length	20 m (65‘ 7“ ft-in) to 32 m (105‘ ft-in)	35 m (114‘ 10“ ft-in) to 50 m (164‘ ft-in)	53 m (173‘ 11“ ft-in) to 68 m (223‘ 1“ ft-in)	71 m (232‘ 11“ ft-in) to 86 m (282‘ 2“ ft-in)	89 m (292‘ ft-in) to 104 m (341‘ 2“ ft-in)	107 m (351‘ 1“ ft-in) to 113 m (370‘ 9“ ft-in)
Main boom length	**max. gradient in %, boom travel uphill**					

LWN/LR.x/V03.01//Auslieferung/2015-06-03/en

copyright by LIEBHERR

Description	Value					
44 m (144‘ 4“ ft-in) to 50 m (164‘ ft-in)	15	15	15	-	-	-
53 m (173‘ 11“ ft-in) to 62 m (203‘ 5“ ft-in)	15	15	-	-	-	-
65 m (213‘ 3“ ft-in) to 74 m (242‘ 9“ ft-in)	15	-	-	-	-	-
77 m (252‘ 7“ ft-in) to 86 m (282‘ 2“ ft-in)	-	-	-	-	-	-

Tab. 450: Permitted gradient for main boom 2821 + luffing jib 2316 + derrick (+ auxiliary jib), boom travel uphill

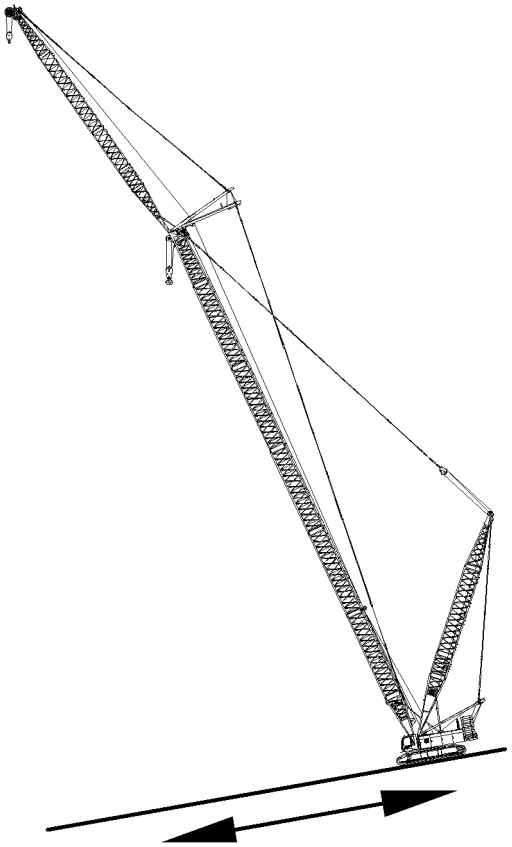

Fig. 2793: Permitted gradient for main boom 2821 + luffing jib 2316 + derrick (+ auxiliary jib), boom travel downhill

Description	Value					
Lifting capacity (empty hook)	1.5 t (3,307 lb) to 3 t (6,614 lb)					
Main boom angle	83°					
Jib angle	73°					
Jib length	20 m (65‘ 7“ ft-in) to 32 m (105‘ ft-in)	35 m (114‘ 10“ ft-in) to 50 m (164‘ ft-in)	53 m (173‘ 11“ ft-in) to 68 m (223‘ 1“ ft-in)	71 m (232‘ 11“ ft-in) to 86 m (282‘ 2“ ft-in)	89 m (292‘ ft-in) to 104 m (341‘ 2“ ft-in)	107 m (351‘ 1“ ft-in) to 113 m (370‘ 9“ ft-in)
Main boom length	**max. gradient in %, boom travel downhill**					

LWN/LR.x/V03.01//Auslieferung/2015-06-03/en

copyright by LIEBHERR

Description	Value					
44 m (144‘ 4“ ft-in) to 50 m (164‘ ft-in)	30	25	15	10	-	-
53 m (173‘ 11“ ft-in) to 62 m (203‘ 5“ ft-in)	25	15	10	5	-	-
65 m (213‘ 3“ ft-in) to 74 m (242‘ 9“ ft-in)	15	10	5	-	-	-
77 m (252‘ 7“ ft-in) to 86 m (282‘ 2“ ft-in)	10	5	-	-	-	-

Tab. 451: Permitted gradient for main boom 2821 + luffing jib 2316 + derrick (+ auxiliary jib), boom travel downhill

LWN/LR.x/V03.01//Auslieferung/2015-06-03/en

copyright by
LIEBHERR

6.9 Rigging equipment and/or sling gear

The machine operator must make sure that the proper rigging equipment and/or sling gear is used for the load.

The rigging equipment and/or sling gear must be selected in such a way that the load can be safely lifted, held and set down again when used properly. It must be rated for the stresses occurring during proper use of the equipment.

When selecting the sling gear (e.g. shackles, round slings) make sure that these do not damage each other or other components.

The rigging equipment and/or sling gear must not be stressed beyond its load-bearing capacity.

When lifting loads with rigging with more than two strands, make sure that the load is distributed evenly to all strands.

The machine operator must know the following:
– Weight of the load to be lifted
– The center of gravity of the load to be lifted
– The dimensions of the load to be lifted

The machine operator must make sure that valid chain certificates are available when using chain weights. The chain certificates must be requested from the manufacturer on initial equipping and from the supplier when exchanging the chains.

The machine operator must make sure that valid rope certificates are available. The rope certificates must be requested from the manufacturer on initial equipping and from the supplier when replacing the ropes.

LWN/LR.x/V03.01//Auslieferung/2015-06-03/en

copyright by
LIEBHERR

6.9.1 4-strand round sling rigging with chain shortening devices

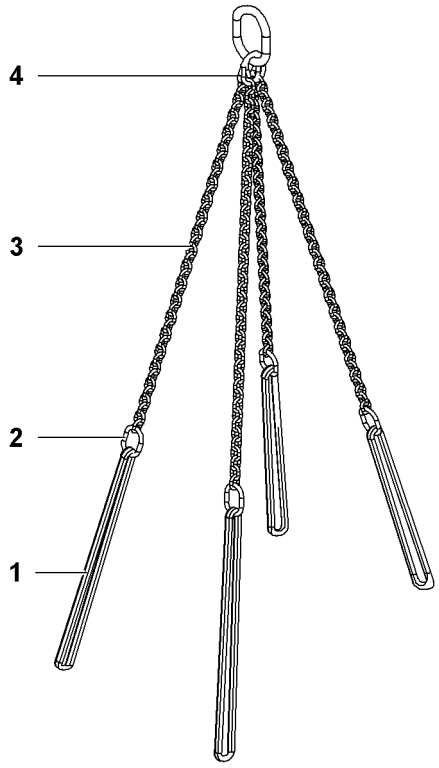

Fig. 2794: 4-strand round sling rigging with chain shortening devices

1 Round sling 10 t (22,046 lb) (4x)
2 Textile coupling 12.5 t (27,557 lb) (4x)
3 Chain (4x)
4 Suspension link with integrated chain shortening devices

Length	Can be shortened	SWL	Application
4 m 13‘ 1“ ft-in	from 3.6 m (11‘ 10“ ft-in) to 1.9 m (6‘ 3“ ft-in)	21 t 46,296 lb	Boom components
			Carbody counterweight
			Rear counterweight

Tab. 452: Technical data 4-strand round sling gear with chain shortening devices

LWN/LR.x/V03.01//Auslieferung/2015-06-03/en

copyright by
LIEBHERR

6.9.2 4-strand round sling gear

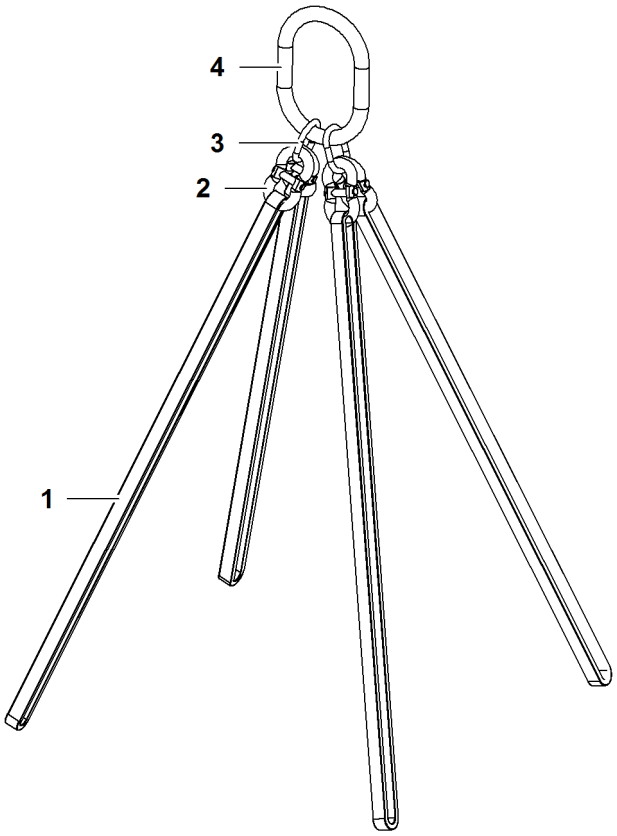

Fig. 2795: 4-strand round sling gear

1 Round sling 15 t (33,069 lb) (4x)

2 Textile coupling 12.5 t (27,557 lb) (4x)

3 Connecting link 12.5 t (27,557 lb) (4x)

4 Suspension link 26.5 t (58,422 lb)

Length	SWL	SWL single-strand	Application
6 m 19‘ 8“ ft-in	26.5 t 58,422 lb	12.5 t 27,557 lb	Crawler side frame
			Rear counterweight

Tab. 453: Technical data 4-strand round sling gear

6.9.3 Other lifting devices

If a jib is delivered with the machine, round slings and shackles are included that remain fixedly installed with these components.

Number	Sling gear	Length	SWL	Component
1	Round sling	3 m 9‘ 10“ ft-in	4 t 8,818 lb	Fixed jib
1	Round sling	2 m 6‘ 7“ ft-in	2 t 4,409 lb	Luffing jib

LWN/LR.x/V03.01//Auslieferung/2015-06-03/en

copyright by
LIEBHERR

Number	Sling gear	Length	SWL	Component
1	Round sling	10 m 32‘ 10“ ft-in	15 t 33,069 lb	Luffing jib
1	Shackle		17 t 37,478 lb	Luffing jib
1	Shackle			Luffing jib

Tab. 454: Technical data other sling gear

LWN/LR.x/V03.01//Auslieferung/2015-06-03/en

copyright by
LIEBHERR

LWN/LR.x/V03.01//Auslieferung/2015-06-03/en

copyright by
LIEBHERR

Assembly and dismantling 7

7 Assembly and dismantling

7 Assembly and dismantling

The chapter **Assembly/disassembly** deals with the following subjects:
– Assembling the machine
– Converting the machine on site
– Disassembling the machine

To make them simple to understand, illustrations are:
– simplified in places, as appropriate.
– not always shown with all machine components.

Directional instructions are given with reference to the position of the operator's seat.

7.1 Explanation of symbols used

Any lengths displayed on the symbols will be quoted in metres.

Symbol	Explanation
	Boom base section
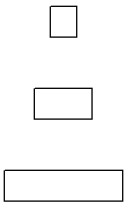	Boom sections
	Reducing adapter
	Midfall
	Boom head
	Boom head with boom section 1 m (3 ft)
	Jib (boom base section + boom head)

LWN/LR.x/V03.01//Auslieferung/2015-06-03/en

copyright by LIEBHERR

Symbol	Explanation
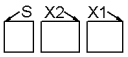	S = Installation position of rope guide X1 = Installation position of mid-point suspension 1 X2 = Installation position of mid-point suspension 2

Tab. 455: Explanation of symbols used

The following symbol is used for orientation in graphics:

Symbol with explanation	
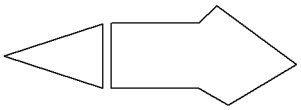	
Position of boom base section	Position of boom head

Tab. 456: Symbol for orientation in graphics

LWN/LR.x/V03.01//Auslieferung/2015-06-03/en

copyright by
LIEBHERR

7.2 Implementation instructions for assembly and disassembly

DANGER
Following incorrect procedures during assembly and disassembly!

- ▶ All activities for assembling and disassembling the machine must be carried out in the order described.
- ▶ Questions or uncertainties must be resolved immediately with the assembly staff.

DANGER
Entering working and danger zone while machine is running!
Risk of crushing of limbs.

- ▶ Make sure that the machine operator always sits in the cabin.
- ▶ Carry out work on machine while under continuous visual and radio contact with machine operator.

When working on machine without presence of machine operator:
- ▶ Switch off the battery main switch.

Use only the Liebherr tool kit provided and the lifting equipment provided to assemble and disassemble the machine.

Always carry out the entire assembly and disassembly of the machine in “Assembly functions”.

All movements of winches, hydraulic cylinders, crawlers and swing should be slow and take place at the lowest speed level.

LWN/LR.x/V03.01//Auslieferung/2015-06-03/en

copyright by
LIEBHERR

7.3 Locking elements - overview

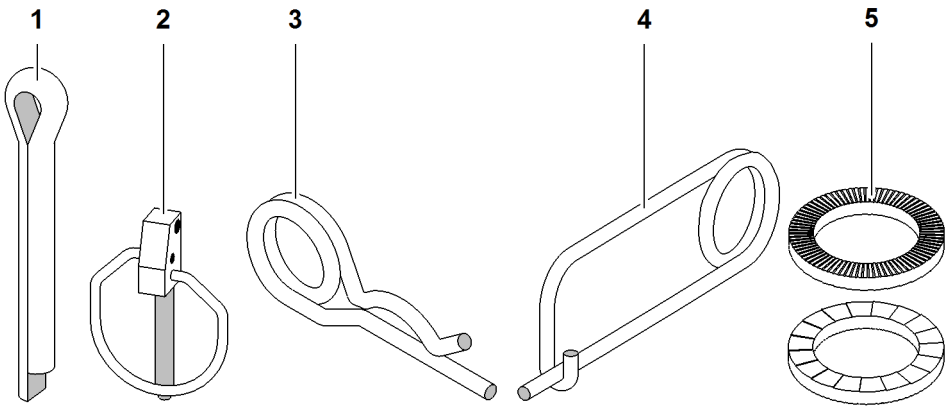

Fig. 2807: Locking elements overview

1 Split pin
2 Linchpin
3 Spring cotter pin
4 Safety pin
5 Locking washers

7.3.1 Split pin

WARNING
Improper multiple use of a cotter pin!
Break of split pin.
Serious injury.

▶ Only use split pins once.

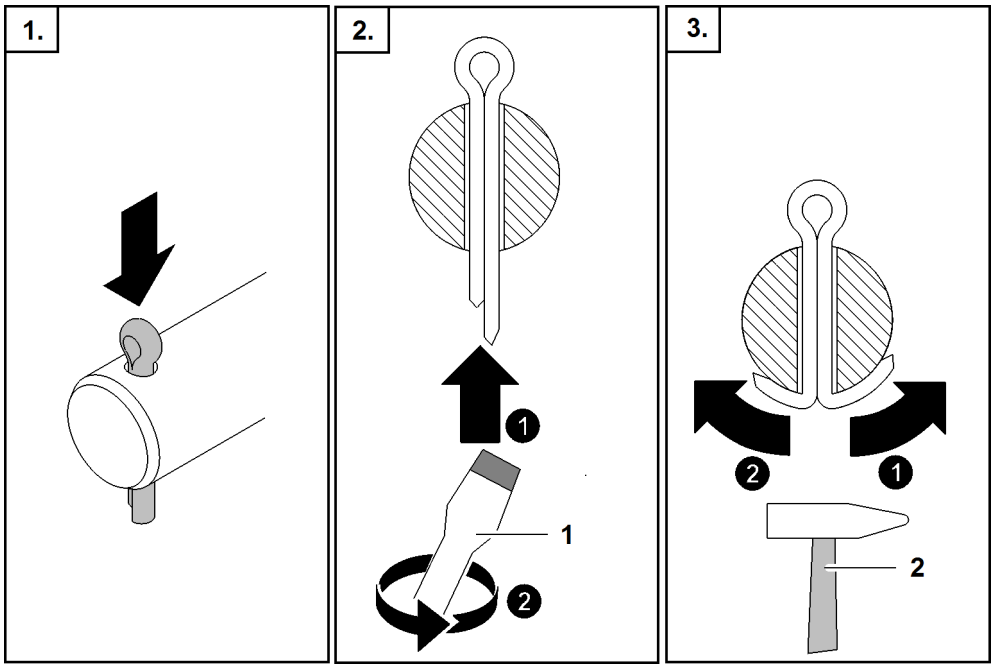

LWN/LR.x/V03.01//Auslieferung/2015-06-03/en

Fig. 2808: Inserting the split pin

1 Screwdriver
2 Hammer

copyright by LIEBHERR

- ▶ Insert the split pin.
- ▶ Bend end of split pin outwards with screwdriver **1**.
- ▶ Bend end of split pin all the way outwards with hammer **2**.

7.3.2 Linchpin

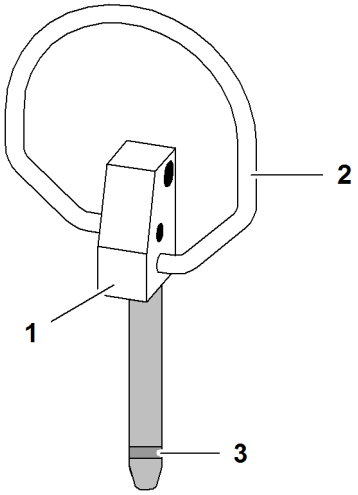

Fig. 2809: Linchpin

1	Linchpin	**3**	Notch
2	Ring		

WARNING
Improper closing of linchpin!
Linchpin detaches unintentionally.
Serious injury.

- ▶ Snap ring **2** into notch **3**.

LWN/LR.x/V03.01//Auslieferung/2015-06-03/en

copyright by
LIEBHERR

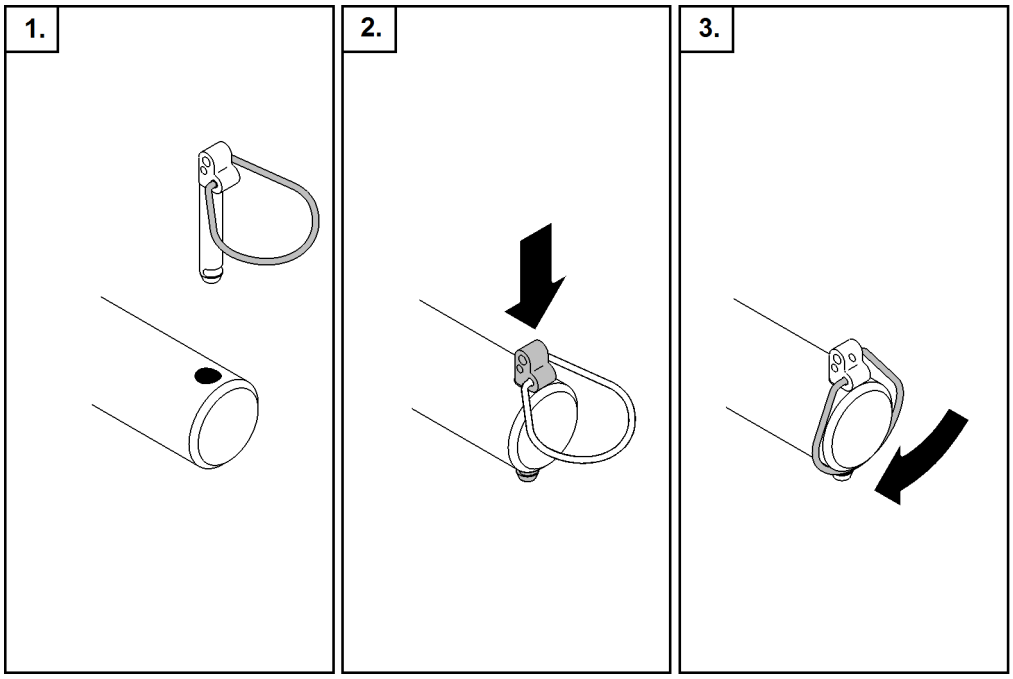

Fig. 2810: Inserting the linchpin

- ▶ Insert the linchpin.
- ▶ Snap ring into notch.

7.3.3 Spring cotter pin

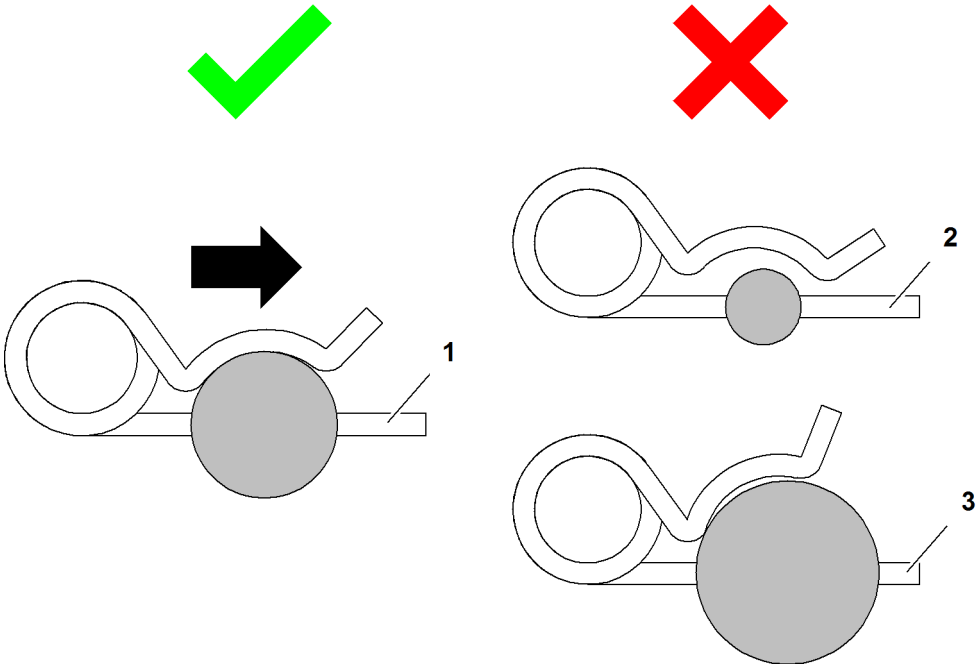

Fig. 2811: Spring cotter pin

1 Right spring cotter pin
2 Spring cotter pin too large
3 Spring cotter pin too small

LWN/LR.x/V03.01//Auslieferung/2015-06-03/en

copyright by
LIEBHERR

WARNING
Wrong dimension of spring cotter pin!
Spring cotter pin detaches unintentionally.
Serious injury.

▶ Use proper spring cotter pin **1**.

▶ Insert spring cotter pin.

7.3.4 Safety pin

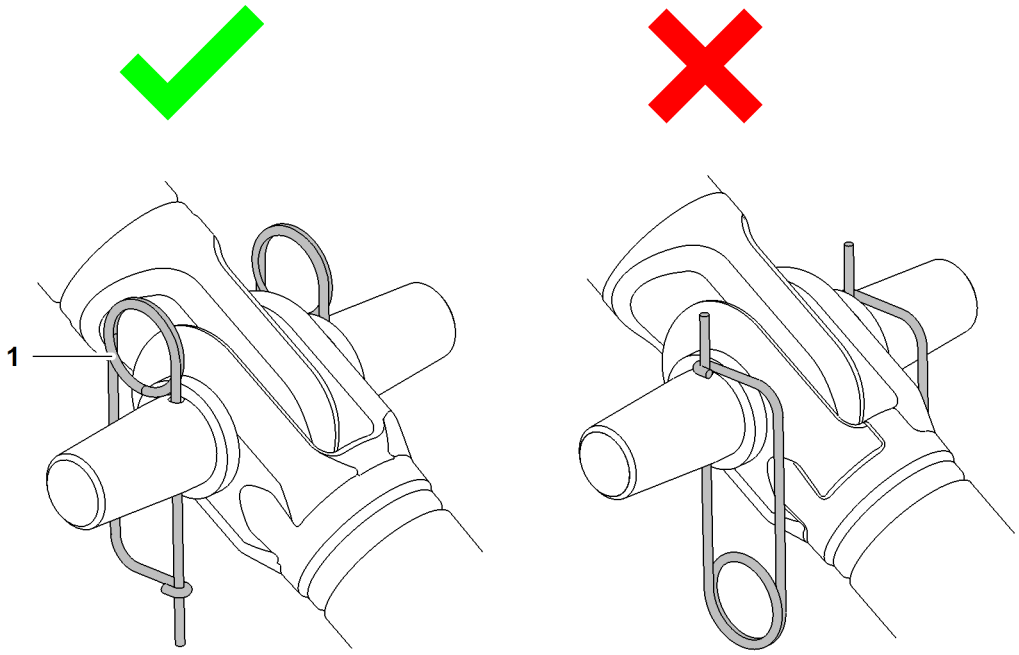

Fig. 2812: Locking spring

1 Locking spring

WARNING
Improperly installed safety pin!
Locking spring detaches unintentionally.
Serious injury.

▶ Install locking spring **1** properly.

LWN/LR.x/V03.01//Auslieferung/2015-06-03/en

copyright by
LIEBHERR

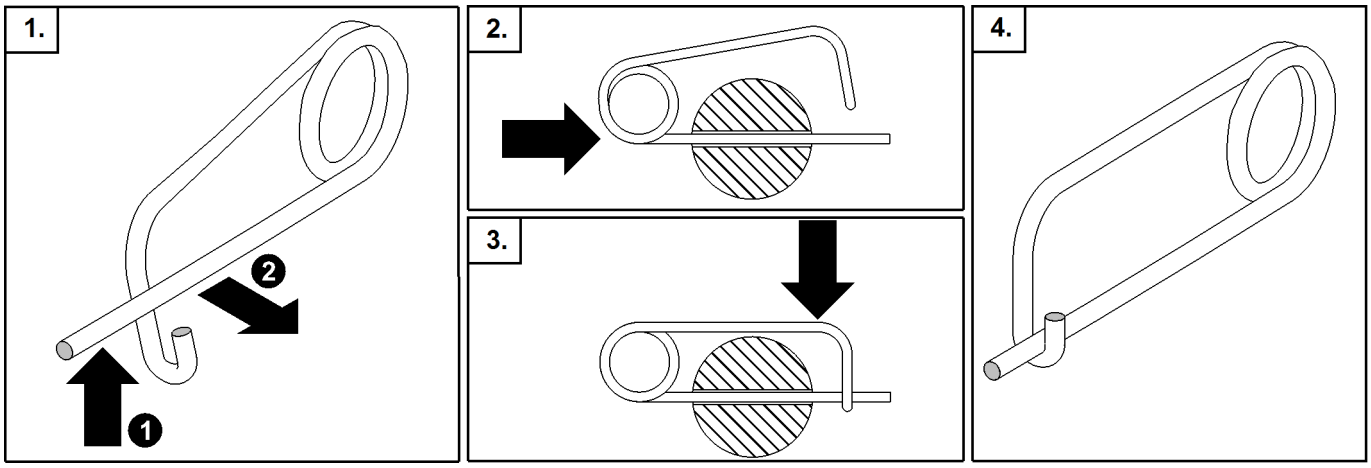

Fig. 2813: Inserting the safety pin

- ▶ Press safety pin together.
- ▶ Open safety pin.
- ▶ Insert safety pin.
- ▶ Press safety pin together.
- ▶ Close safety pin.

LWN/LR.x/V03.01//Auslieferung/2015-06-03/en

copyright by
LIEBHERR

7.3.5 Locking washers

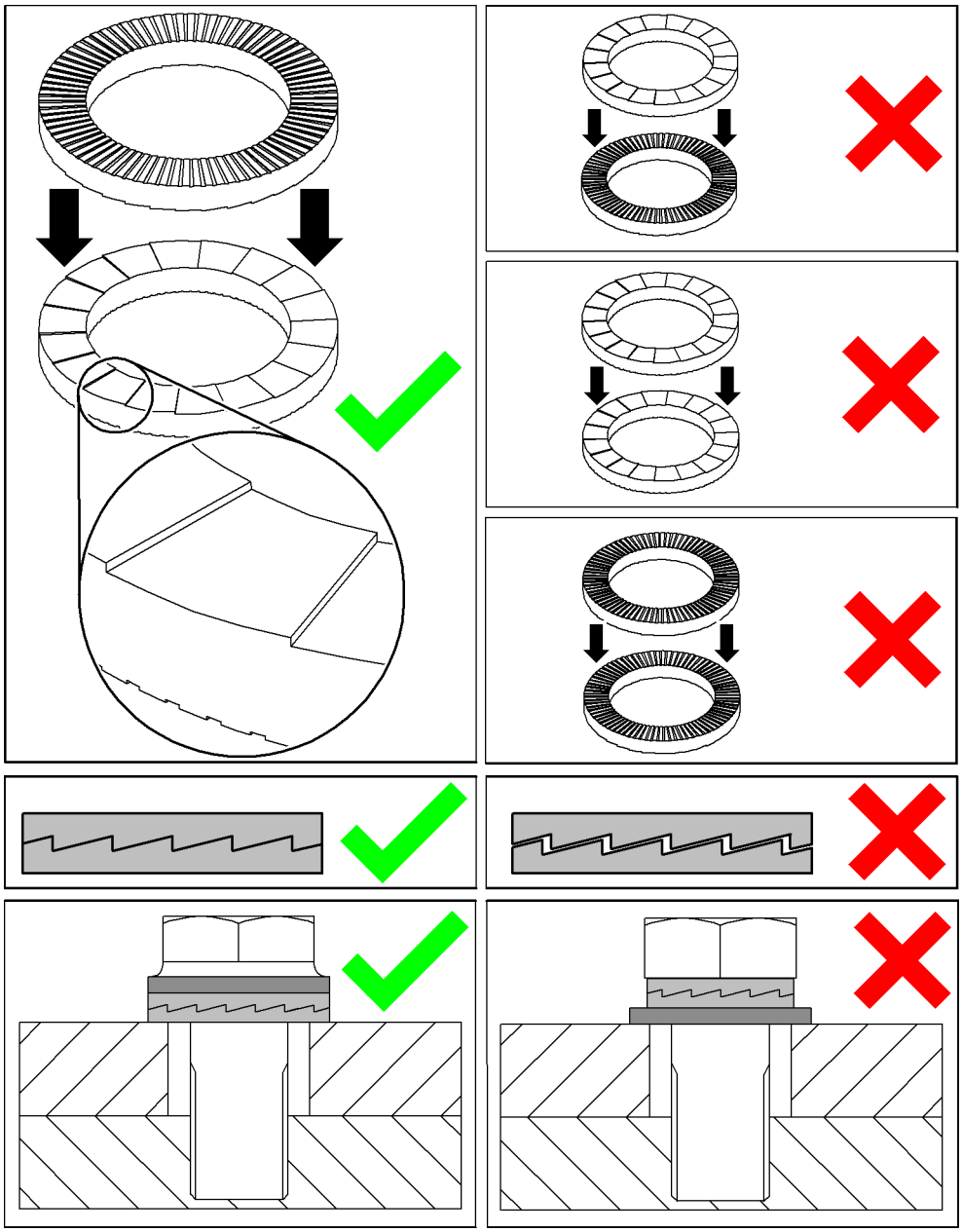

Fig. 2814: Locking washers

WARNING
Improperly installed locking washers!
Screw connection detaches unintentionally.
Serious injury.

- ▶ Install locking washers properly.
- ▶ Tighten screw with specified torque.

LWN/LR.x/V03.01//Auslieferung/2015-06-03/en

copyright by LIEBHERR

7.4 Assembling the basic machine

Assembly of basic machine with self-assembly system is described below.

It is not necessary to use an auxiliary crane, so this is not described.

Ensure that the following conditions are fulfilled:
- ❑ The machine has been prepared for self-assembly.
- ❑ Work plans have been drawn up.
- ❑ The number of counterweight slabs is known.
- ❑ The transport vehicles with the single components are coordinated to ensure that the procedure runs smoothly.
- ❑ Any accessories required are available.

7.4.1 Notes

The illustrations have been simplified or schematically represented for reasons of uniformity and represent the principles of assembly. They do not provide a detailed representation of the components.

7.4.2 Moving cabin platforms* into working position

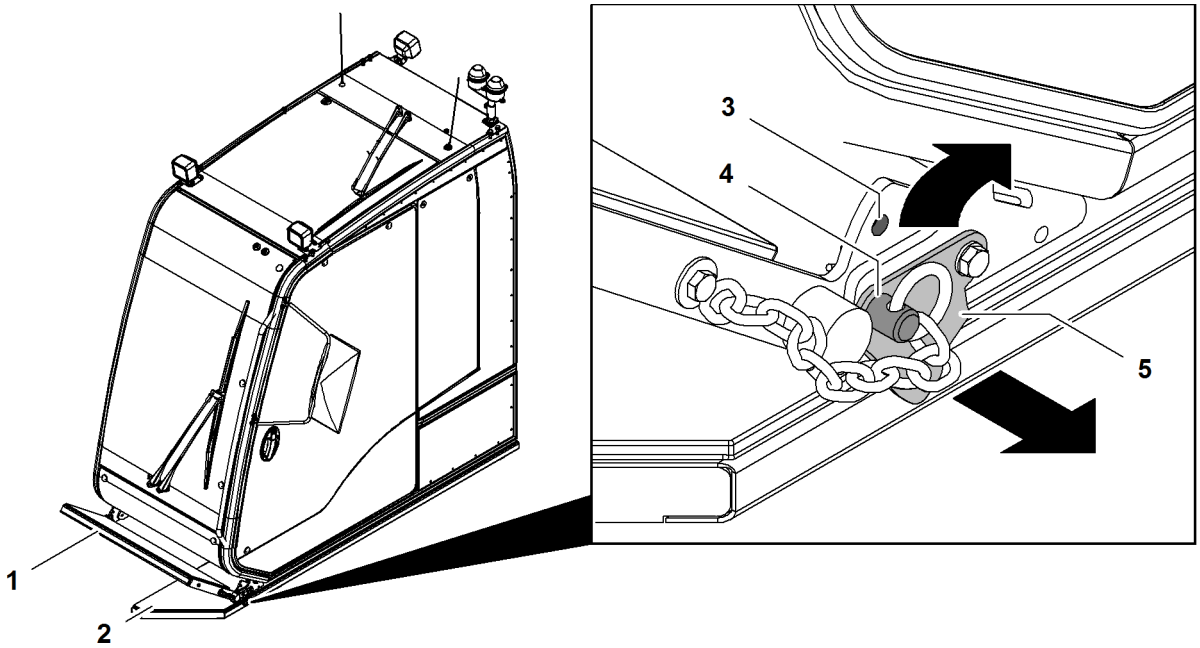

Fig. 2815: Moving cabin platforms into working position

1	Front platform	**3**	Top pin connection point	**5**	Locking element
2	Side platform	**4**	Pin		

The pin **4** is in the bottom pin connection point.

▶ Remove spring cotter pin and pin **4**.

▶ Fold up securing element **5**.

LWN/LR.x/V03.01/Auslieferung/2015-06-03/en

copyright by
LIEBHERR

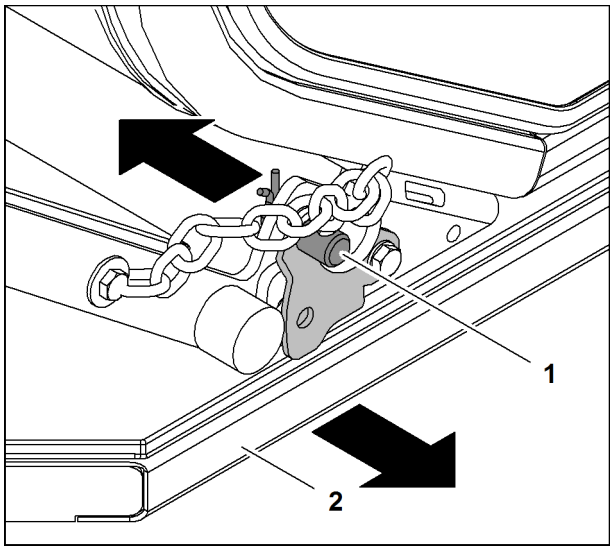

Fig. 2816: Moving the side platform into working position

1 Pin **2** Side platform

▶ Insert pin **1** in top pin connection point.
  ▷ Front platform is secured.
  ▷ Side platform **2** is unlocked.

▶ Pull out side platform **2**.

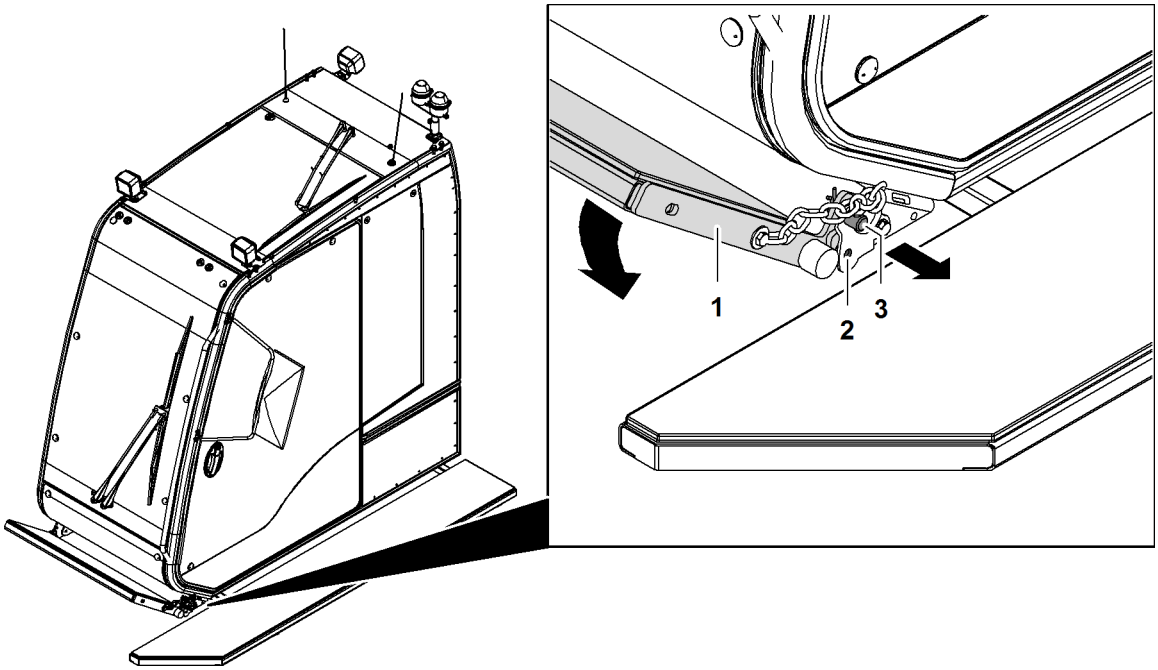

Fig. 2817: Moving the front platform into working position

1 Front platform **2** Bottom pin connection point **3** Pin

▶ Slightly lift front platform **1** and remove pins **3**.

LWN/LR.x/V03.01//Auslieferung/2015-06-03/en

copyright by
LIEBHERR

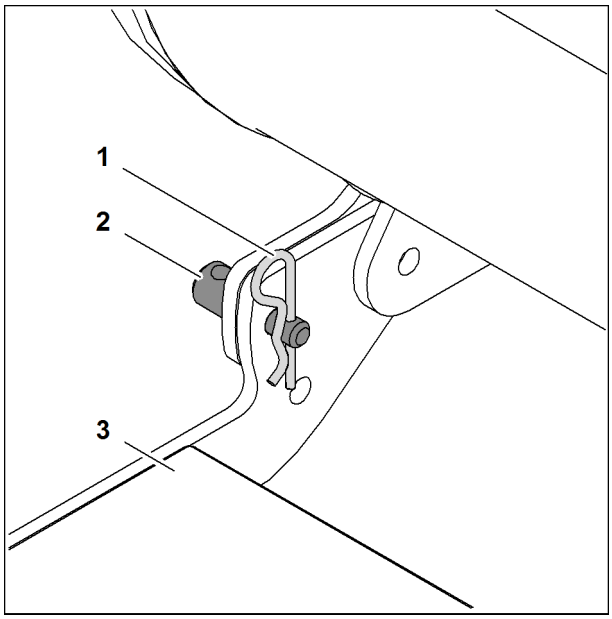

Fig. 2818: Moving the front platform into working position

1 Spring cotter pin
2 Pin
3 Front platform

▶ Repeat procedure on opposite side.

▶ Fold down front platform **3**.

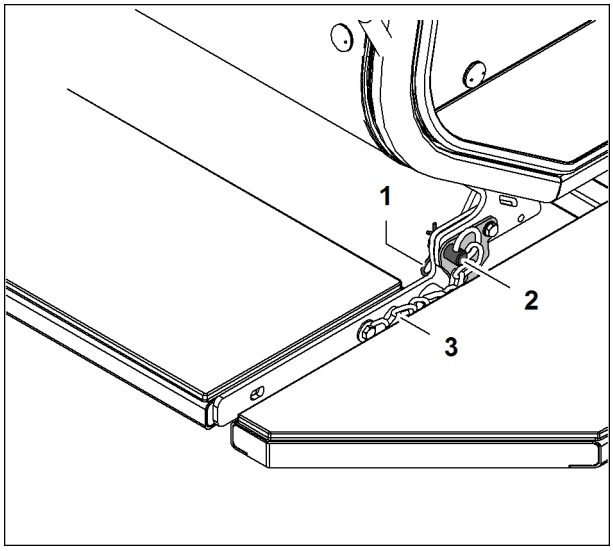

Fig. 2819: Moving the front platform into working position

1 Spring cotter pin
2 Pin
3 Chain

▶ Fold down securing element.

▶ Insert pin **2** in top pin connection point.

▶ Secure pin **2** with spring cotter pin **1**.

LWN/LR.x/V03.01//Auslieferung/2015-06-03/en

copyright by
LIEBHERR

WARNING
Chain lying around!
Risk of falling off cabin.

▶ Ensure that no one trips over the chain **3**.

▶ Remove chain.

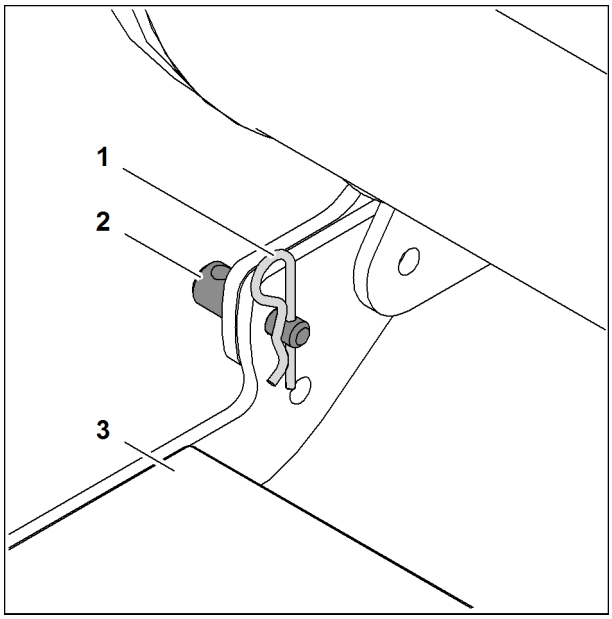

Fig. 2820: Moving the front platform into working position

1 Spring cotter pin
2 Pin
3 Front platform

▶ Repeat procedure on opposite side.

LWN/LR.x/V03.01//Auslieferung/2015-06-03/en

copyright by
LIEBHERR

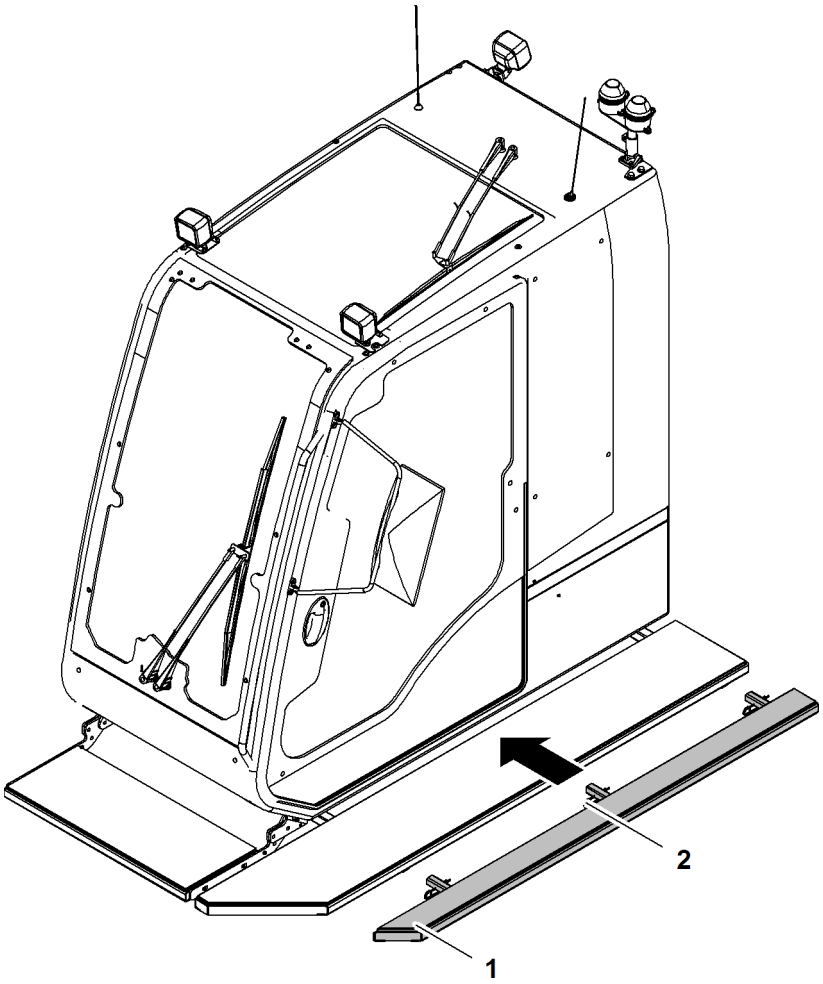

Fig. 2821: Mounting the platform extension

1 Platform extension **2** Locking spring (3x)

▶ Insert platform extension **1** on the side.

▶ Secure platform extension **1** with locking springs **2**.

7.4.3 Swivel the cab to the working position

If the machine is equipped with hydraulic cabin elevation*, the cabin cannot be slewed.

LWN/LR.x/V03.01//Auslieferung/2015-06-03/en

copyright by
LIEBHERR

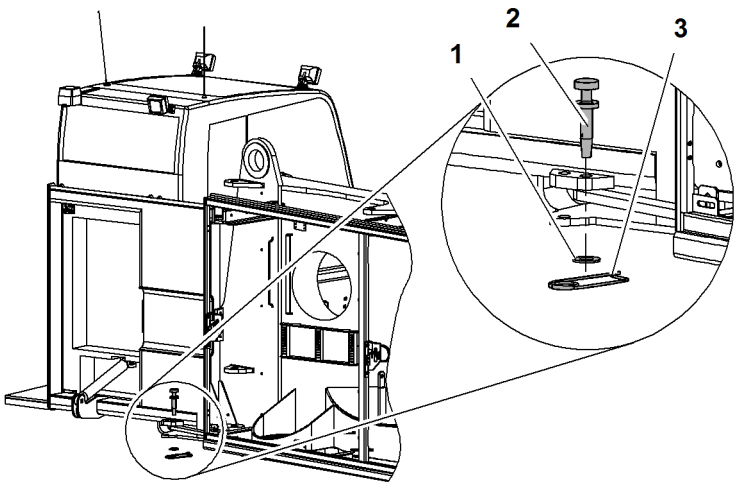

Fig. 2822: Cabin in transport position

1 Washer
2 Pin
3 Safety pin

▶ Remove safety pin **3**, washer **1** and pin **2**.

CAUTION
Pivoting cab!
Risk of crushing of limbs.

▶ Remain outside of the swing range of the cab.

▶ Keep all limbs well clear of moving parts.

▶ Swiveling the cab to the working position manually.

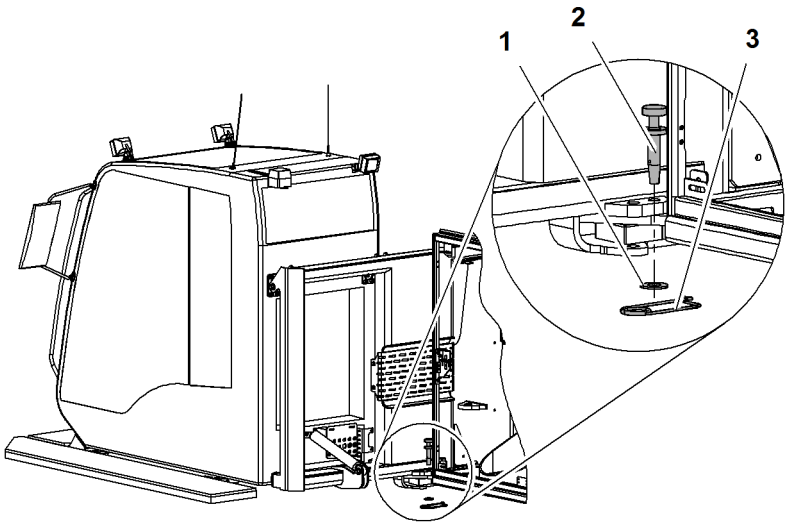

Fig. 2823: Cabin in working position

1 Washer
2 Pin
3 Safety pin

▶ Insert pin **2** and secure with washer **1** and safety pin **3**.
▷ The cab is swung roughly 2° (2°) towards the boom. This swinging makes it easier to see the load (for an average radius).

LWN/LR.x/V03.01//Auslieferung/2015-06-03/en

copyright by
LIEBHERR

7.4.4 Mounting the cabin railing*

Installing the cabin railing without platforms on the uppercarriage

If the basic machine has no platforms on the uppercarriage, this cabin railing must be installed.

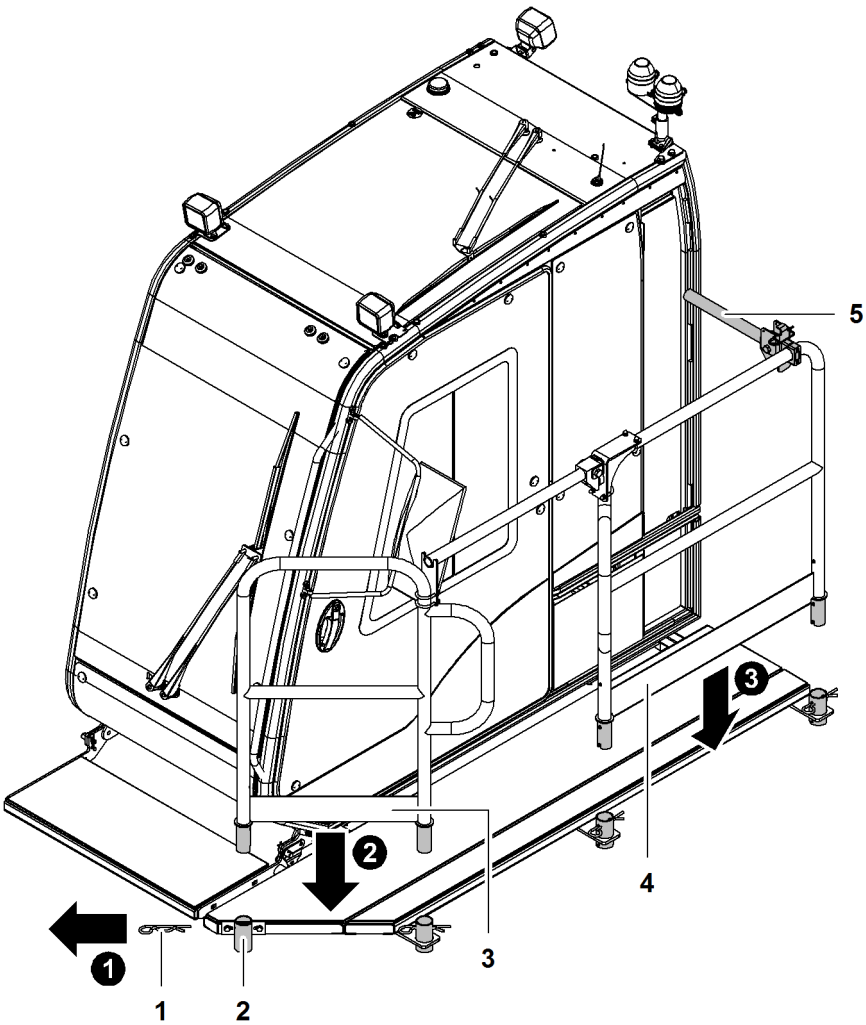

Fig. 2824: Installing the cabin railing without platforms on the uppercarriage*

1	Locking spring (4x)	**4**	Rear cabin railing
2	Bracket (4x)	**5**	Chopper bar
3	Front cabin railing		

- ▶ Remove locking springs **1**.
- ▶ Push front cabin railing **3** from above into bracket **2**.
- ▶ Secure front cabin railing **3** with locking springs **1**.
- ▶ Push rear cabin railing **4** from above into bracket **2**.
- ▶ Secure rear cabin railing **4** with locking spring **1**.
- ▶ Mount chopper bar **5**.

LWN/LR.x/V03.01//Auslieferung/2015-06-03/en

copyright by
LIEBHERR

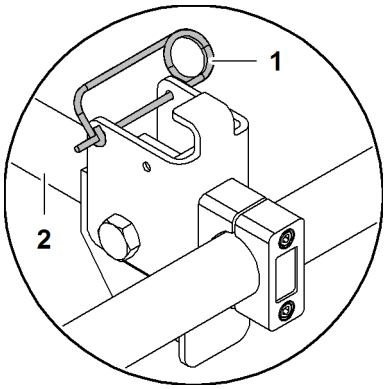

Fig. 2825: Securing the chopper bar

1 Locking spring **2** Chopper bar

WARNING
Unsecured chopper bar!
Fall from cabin platform.

▶ Ensure that chopper bar **2** is secured with locking spring **1** in closed position.

▶ Secure chopper bar **2** with locking spring **1** in closed position.

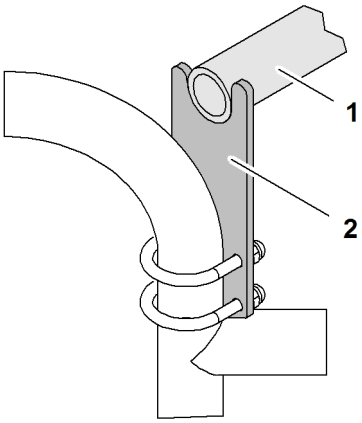

Fig. 2826: Chopper bar of cabin railing

1 Chopper bar **2** Bracket

WARNING
Unsecured chopper bar!
Fall from cabin platform.

▶ Ensure that chopper bar **1** engages in bracket **2**.

▶ Check whether chopper bar **1** engages in bracket **1** by opening and closing chopper bar **2**.
▷ Cabin railing is mounted and secured.

Installing the cabin railing with platforms on the uppercarriage

If the basic machine has platforms on the uppercarriage, this cabin railing must be installed.

LWN/LR.x/V03.01//Auslieferung/2015-06-03/en

copyright by
LIEBHERR

Ensure that the following conditions are fulfilled:
❑ Two helpers are available.

Installing the frame on the cabin

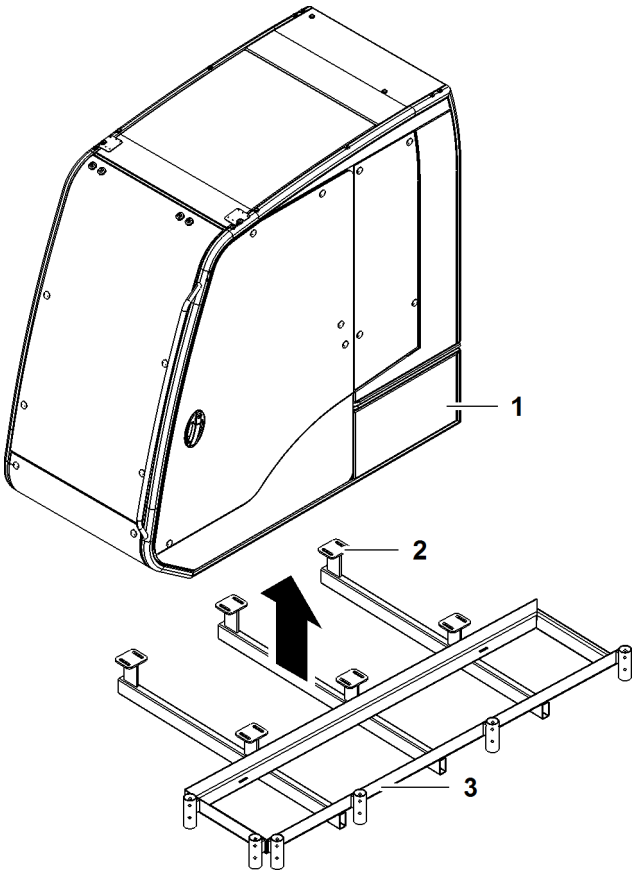

Fig. 2827: Installing the frame on the cabin

1 Cabin
2 Attachment point (6x)
3 Frame

▶ Lift frame **3** to cabin **1**.

▶ Install frame **3**.

LWN/LR.x/V03.01//Auslieferung/2015-06-03/en

copyright by
LIEBHERR

Installing railing parts on the frame

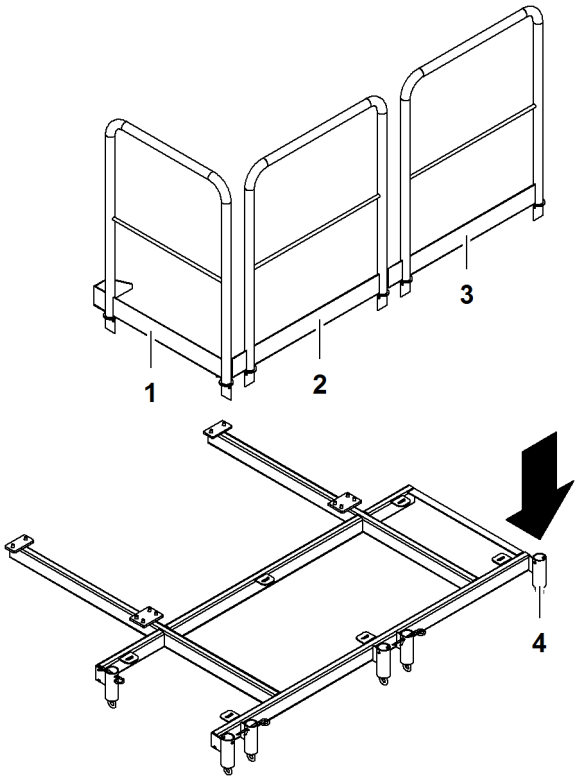

Fig. 2828: Installing railing parts on the frame

1	Railing part A	**3**	Railing part B
2	Railing part B	**4**	Support (6x) for railing

▶ Remove locking elements of the supports **4**.

▶ Insert railing parts A + B **1 + 2 + 3** into supports **4**.

Securing the railing parts

Securing the railing parts with locking elements

There are two locking elements:
– Spring cotter pin outside
– Locking spring inside

LWN/LR.x/V03.01//Auslieferung/2015-06-03/en

copyright by
LIEBHERR

Securing the railing parts with spring cotter pin outside

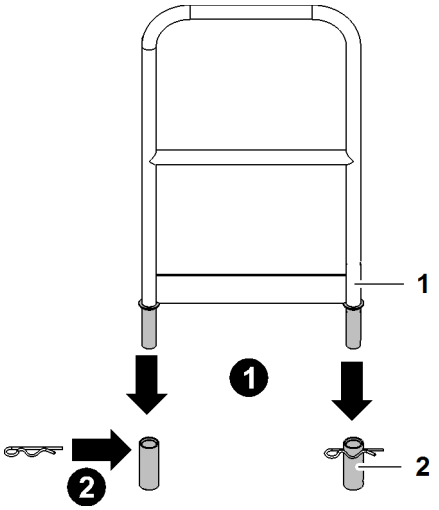

Fig. 2829: Securing the railing parts with spring cotter pin outside

1 Railing part **2** Bracket for railing parts

▶ Insert railing part **1** in bracket **2**.

▶ Repeat procedure with all railing parts.

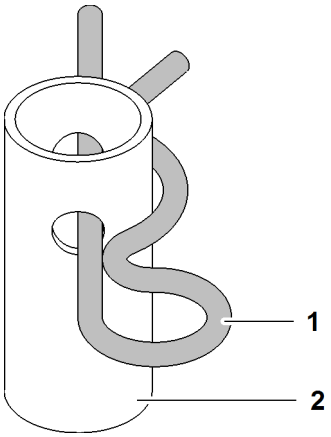

Fig. 2830: Inserting the spring cotter pin

1 Spring cotter pin **2** Bracket for railing parts

▶ Insert spring cotter pin **1**.

▶ Repeat procedure with all brackets **2**.

▶ Ensure that the spring cotter pin **1** is inserted correctly.
▷ Railing parts secured with spring cotter pin outside.

LWN/LR.x/V03.01//Auslieferung/2015-06-03/en

copyright by
LIEBHERR

Secure railing parts with locking spring inside

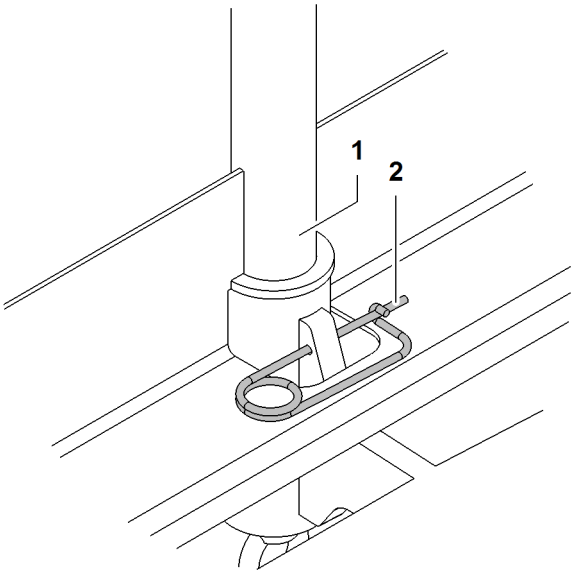

Fig. 2831: Secure railing parts with locking spring inside

1 Railing part **2** Locking spring

▶ Secure railing parts with locking springs **2**.

▶ Repeat procedure with all railing parts **1**.
▷ Railing parts secured with locking spring inside.

Securing the railing parts with eye bolt

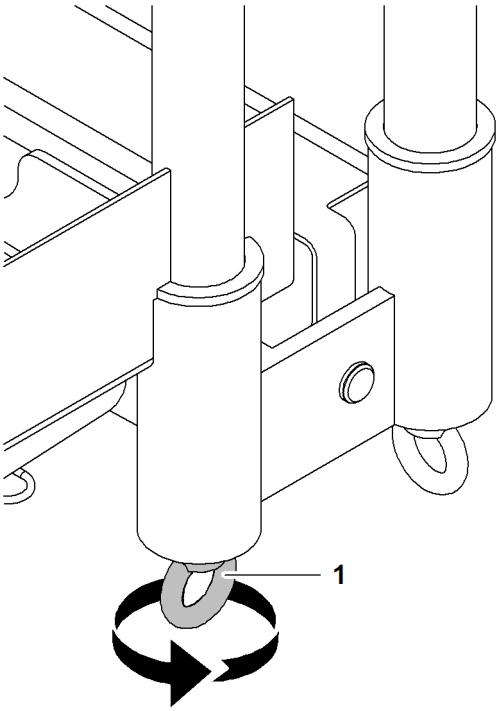

Fig. 2832: Securing the railing parts with eye bolt

1 Eye bolt for railing stabilization

▶ Tighten eye bolt **1**.

LWN/LR.x/V03.01//Auslieferung/2015-06-03/en

copyright by
LIEBHERR

▷ Wedge of railing stabilization secures the railing part.

▶ Repeat procedure with all railing parts.

Insert catwalk grating in frame

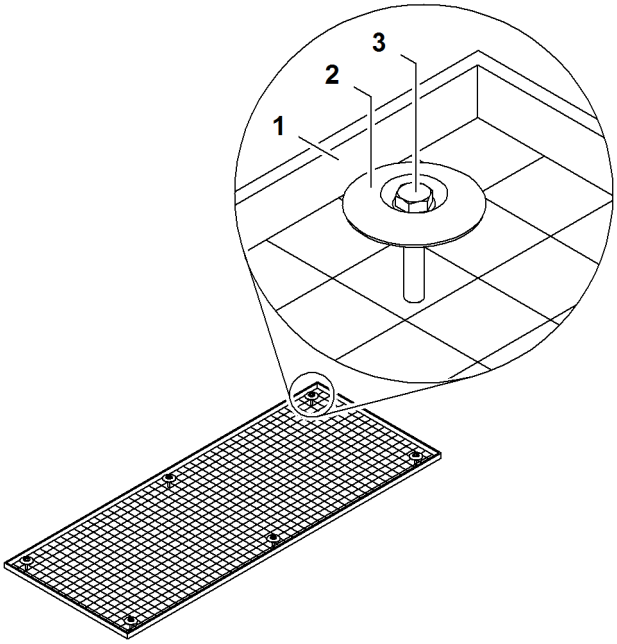

Fig. 2833: Insert catwalk grating in frame

1 Catwalk grating
2 Plate (6x)
3 Screw (6x)

▶ Insert catwalk grating **1** in frame.

▶ Insert screw **3** with plate **2** at catwalk grating **1** and attachment point.

▶ Secure screw **3** with washer and nut.
▷ Cabin railing is installed:

LWN/LR.x/V03.01//Auslieferung/2015-06-03/en

copyright by
LIEBHERR

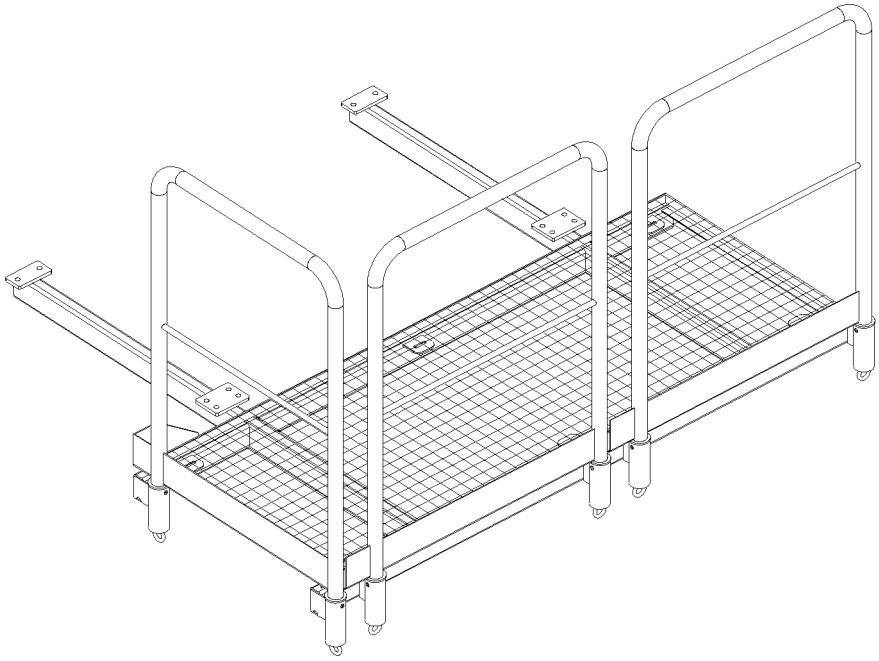

Fig. 2834: Cabin railing is installed

7.4.5 Putting the load moment limiter lamp and flashing light into working position

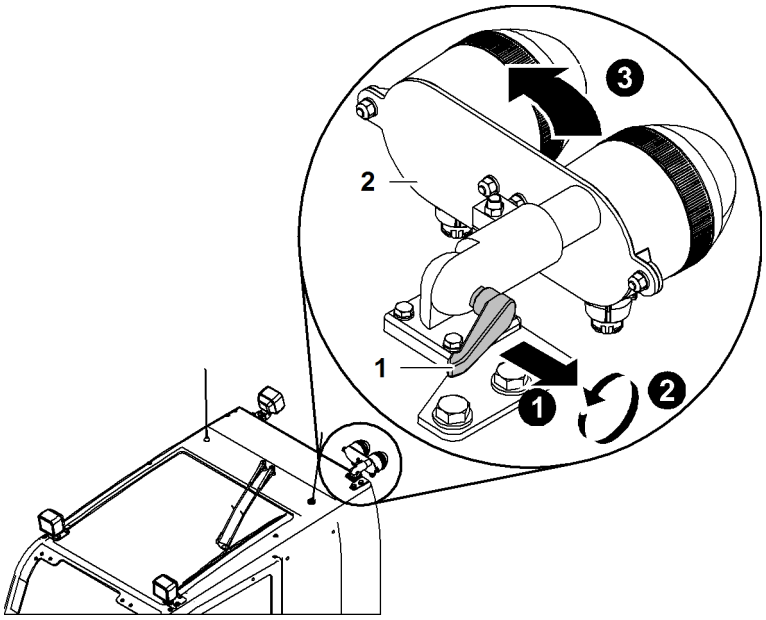

Fig. 2835: Putting the load moment limiter lamp and flashing light into working position

1	Clamping device	**2**	Load moment limiter lamp and flashing light

The clamping device **1** is a ratchets and can be turned into any desired position.

- ▶ Pull out clamping device.
- ▶ Turn clamping device into the desired position.
- ▶ Let go of clamping device.

LWN/LR.x/V03.01//Auslieferung/2015-06-03/en

copyright by LIEBHERR

▷ Clamping device engages.

▶ Twist clamping device counter-clockwise.
▷ Screw fitting opens.

▶ Fold load moment limiter lamp and flashing light **2** upwards.

▶ Turn clamping device **1** clockwise.
▷ Screw fitting closes.
▷ Put load moment limiter lamp and flashing light into position.

LWN/LR.x/V03.01//Auslieferung/2015-06-03/en

copyright by
LIEBHERR

7.4.6 Mounting the platforms on the uppercarriage

Sorting and positioning platform parts

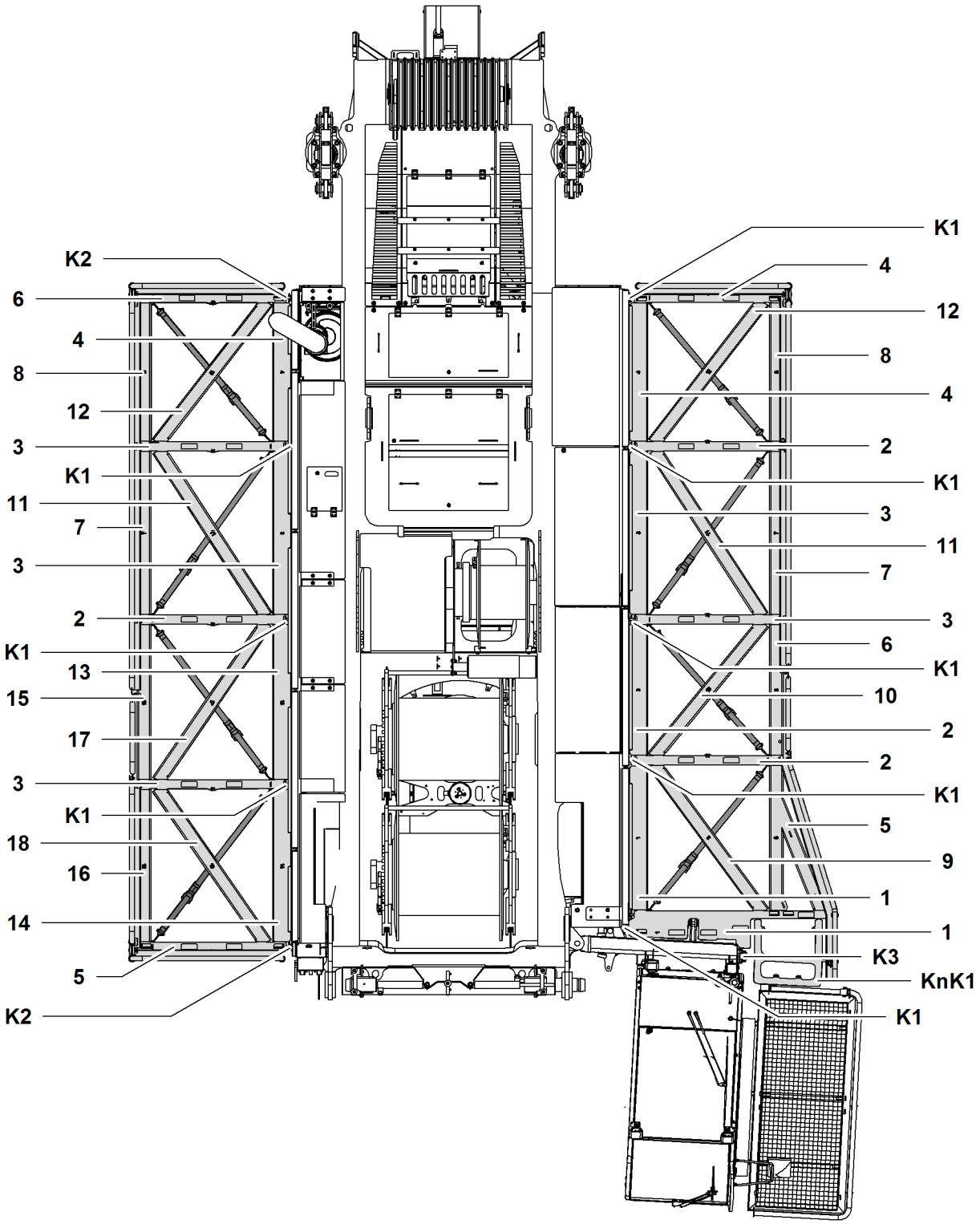

Fig. 2836: Overview of platform parts with part numbers and installation sites

The platform parts are marked with part numbers for identification.

LWN/LR.x/V03.01//Auslieferung/2015-06-03/en

copyright by
LIEBHERR

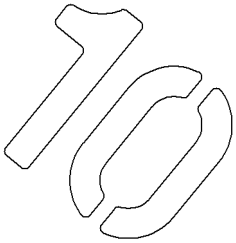

Fig. 2837: Example of a part number

Name	Part number	Number
Brackets		
Bracket	KnK1 A)	1
Bracket	1	1
Bracket	2	3
Bracket	3	3
Bracket	4	1
Bracket	5	1
Bracket	6	1
Bracket supports		
Bracket support	K1 A)	8
Bracket support	K2 A)	2
Bracket support	K3 A)	1
Plates (inside)		
Plate	1	1
Plate	2	2
Plate	3	2
Plate	4	1
Plate	13	1
Plate	14	1
Plates (outside)		
Plate	5	1
Plate	6	1
Plate	7	2
Plate	8	2
Plate	15	1
Plate	16	1
Diagonals		
Diagonal	9	1
Diagonal	10	1
Diagonal	11	2

LWN/LR.x/V03.01//Auslieferung/2015-06-03/en

copyright by
LIEBHERR

Name	Part number	Number
Diagonal	12	2
Diagonal	17	1
Diagonal	18	1
Straps		
Strap	A)	8

Tab. 457: Overview of platform parts

A) No part number on platform part.

Note

Liebherr recommends:
▶ ensure that sufficient space is available.

▶ Sort platform parts.

▶ Position platform parts next to machine at the corresponding installation site.

Mounting bracket support K1 and bracket support K2

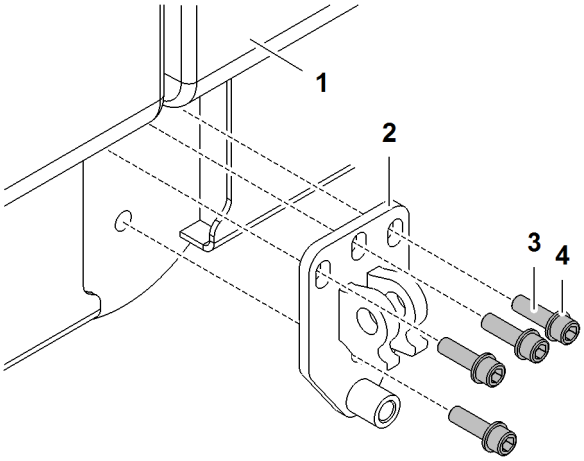

Fig. 2838: Mounting bracket support K1 and bracket support K2

1	Uppercarriage door	**3**	Screw (4x)
2	Bracket support	**4**	Washer (4x)

The bracket support **2** is defined as bracket support K1 or bracket support K2.

▶ Install bracket support **2** with screws **3** and washers **4**.

▶ Repeat procedure at all installation sites for bracket support K1 and bracket support K2.
▷ Bracket support K1 and bracket support K2 are installed.

LWN/LR.x/V03.01//Auslieferung/2015-06-03/en

copyright by LIEBHERR

Installing bracket1

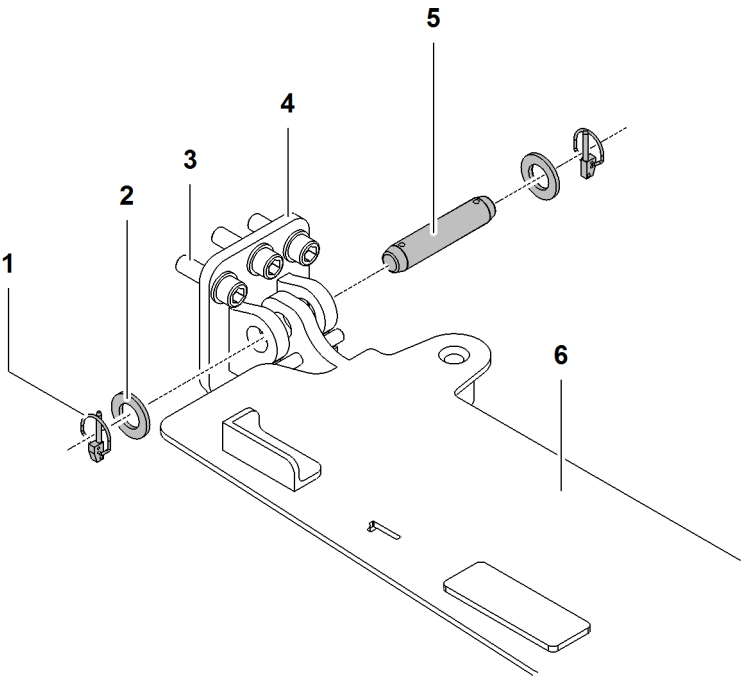

Fig. 2839: Installing bracket1

1	Linchpin (2x)	**4**	Bracket support
2	Washer (2x)	**5**	Pin
3	Screw (4x)	**6**	Bracket1

▶ Pin bracket support **4** with bracket1 **6**.

▶ Secure pins **5** on both sides with washers **2** and linchpins **1**.
▷ Bracket1 **6** is installed.

LWN/LR.x/V03.01//Auslieferung/2015-06-03/en

copyright by
LIEBHERR

Installing bracket KnK1

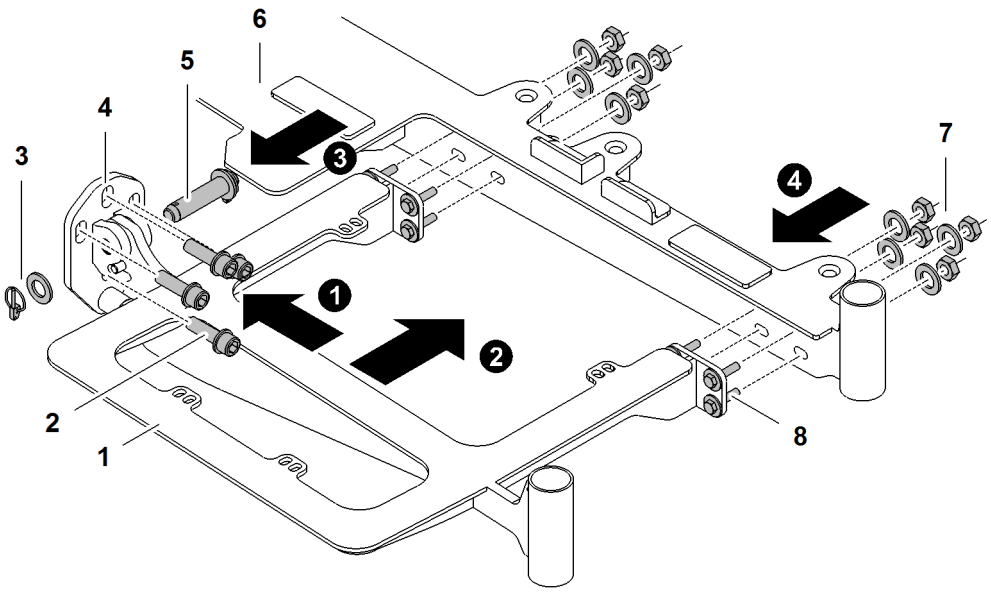

Fig. 2840: Installing bracket KnK1

1	Bracket KnK1	**5**	Pin
2	Screw (4x) and washer	**6**	Bracket1
3	Linchpin (2x) and washer	**7**	Nut (8x) and washer
4	Bracket support K3	**8**	Screw (8x) and washer

- ▶ Install bracket support K3 **4** with screws **2** and washers but do not tighten all the way.
- ▶ Position bracket KnK1 **1** on bracket1 **6**.
- ▶ Pin bracket support K3 **4** with bracket KnK1 **1**.
- ▶ Secure pins **5** with linchpins **3** and washers.
- ▶ Insert screws **8** and washers.
- ▶ Install nuts **7** and washers but do not tighten all the way.
- ▶ Align bracket KnK1 **1**.
- ▶ Tighten screws **2** and screws **8**.
  ▷ Bracket KnK1 **1** is installed.

LWN/LR.x/V03.01//Auslieferung/2015-06-03/en

copyright by
LIEBHERR

Installing brackets

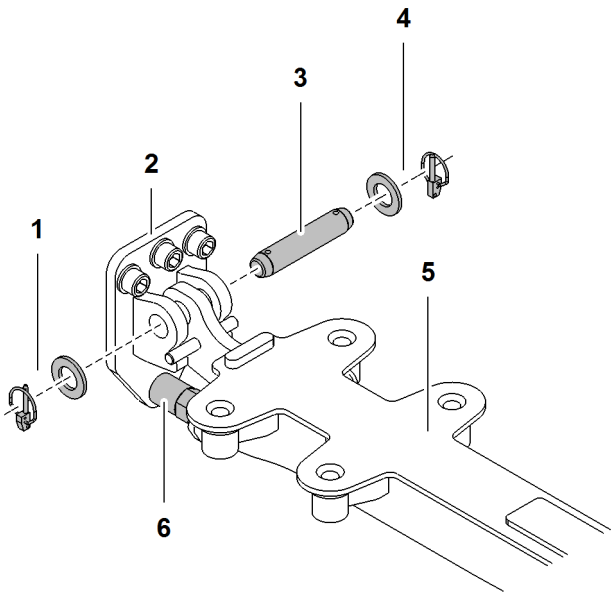

Fig. 2841: Installing brackets

1	Linchpin and washer	**4**	Linchpin and washer
2	Bracket support	**5**	Bracket
3	Pin	**6**	Adjusting screw

The bracket support **2** is defined as bracket support K1 or bracket support K2.

- ▶ Pin bracket **5** with bracket support **2**.
- ▶ Secure pin **3** with linchpin **1** and washer and linchpin **4** and washer.
- ▶ Repeat the procedure for all brackets.
- ▶ Slightly lift bracket **5**.
- ▶ Level bracket **6** horizontally with adjusting screw **5**.
- ▶ Repeat the procedure for all brackets.
  - ▷ Brackets are installed.

Installing plates and diagonals

Installation of plates and diagonals is identical.

LWN/LR.x/V03.01//Auslieferung/2015-06-03/en

copyright by
LIEBHERR

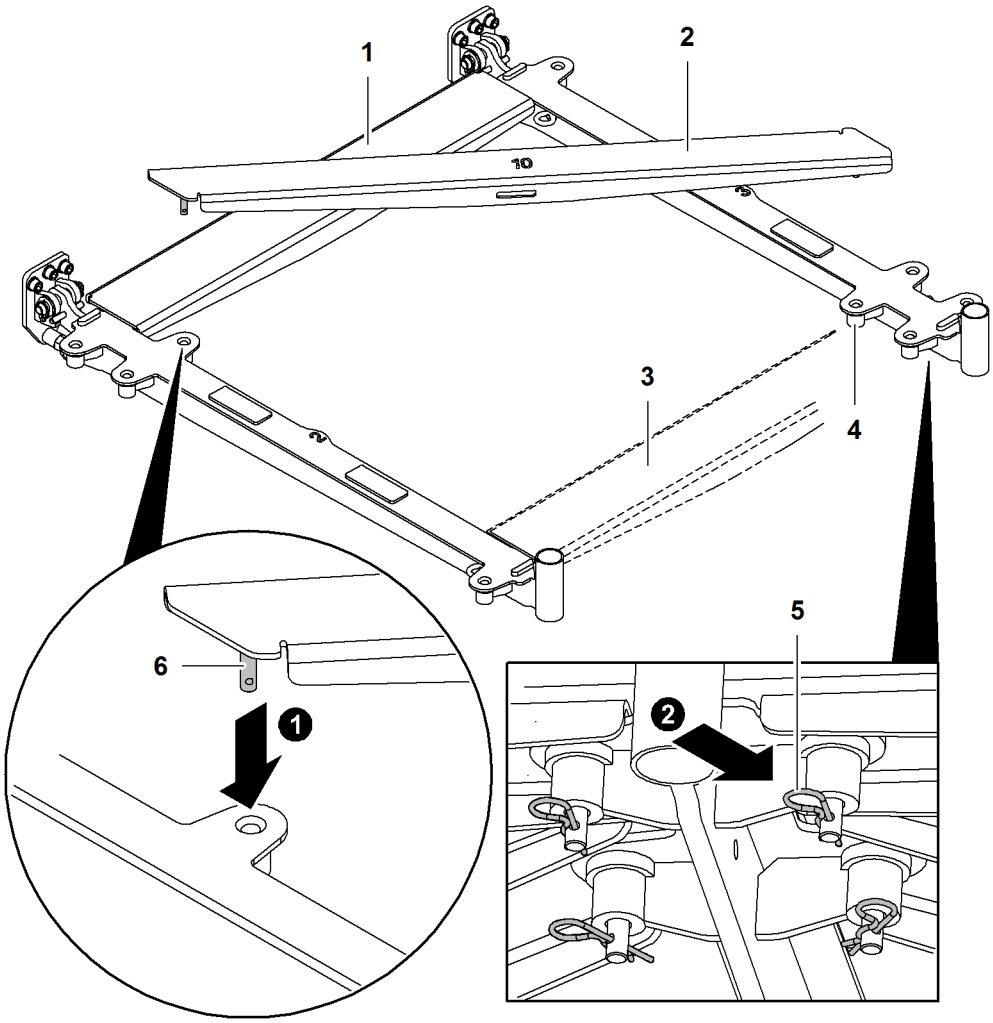

Fig. 2842: Installing plates and diagonals (illustration of principle)

1	Plate (inside)	**4**	Pin connection point (6x)
2	Diagonal	**5**	Spring cotter pin (6x)
3	Plate (outside)	**6**	Pin (6x)

Installation sequence:
- Plate **1** (inside)
- Diagonal **2**
- Plate **3** (outside)

▶ Insert pin **6** at pin connection point **4**.

▶ Secure pin **6** with spring cotter pin **5**.

▶ Repeat procedure with all plates and diagonals.
▷ Plates and diagonals are installed.

LWN/LR.x/V03.01//Auslieferung/2015-06-03/en

copyright by
LIEBHERR

Sorting and positioning railing parts

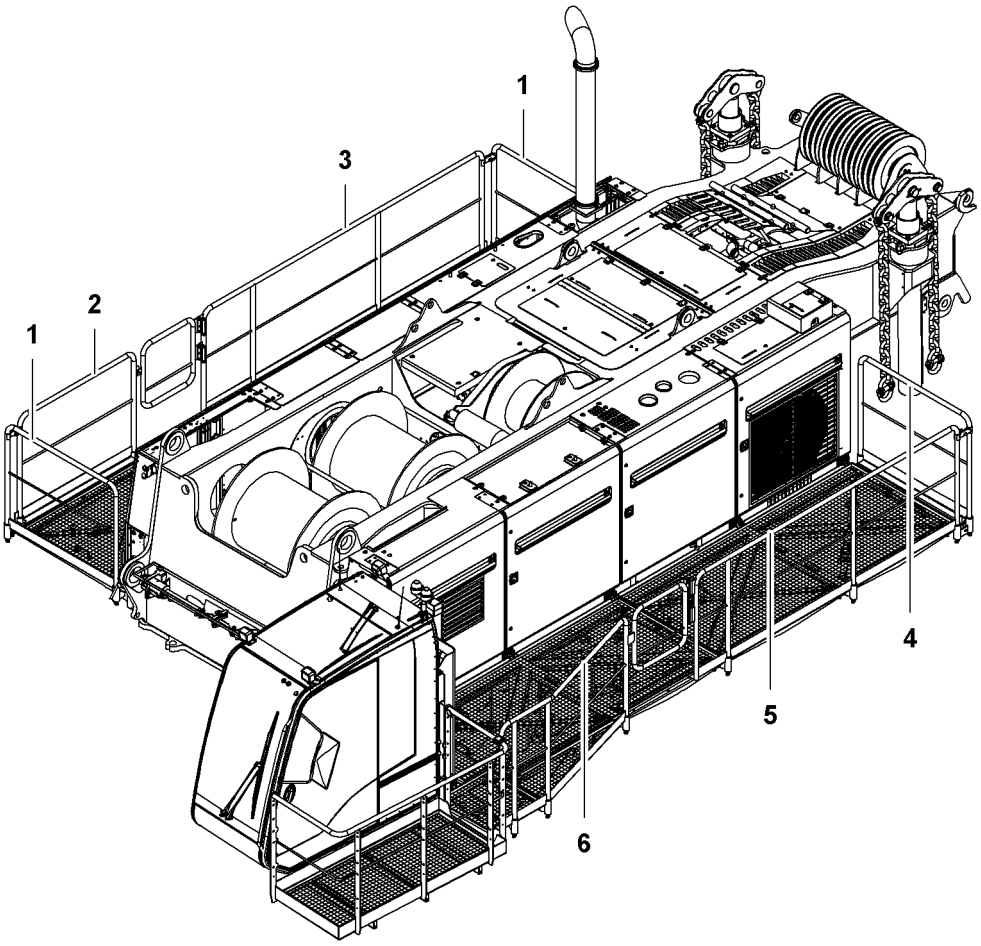

Fig. 2843: Overview of railing parts

1 Railing part1
2 Railing part2
3 Railing part3
4 Railing part4
5 Railing part5
6 Railing part6

Name	Length	Number
Right railing		
Railing part1	1372 mm 4‘ 6“ ft-in	2
Railing part2	1394 mm 4‘ 7“ ft-in	1
Railing part3	3415 mm 11‘ 2“ ft-in	1
Left railing		
Railing part6	2005 mm 6‘ 7“ ft-in	1
Railing part5	4001 mm 13‘ 2“ ft-in	1

LWN/LR.x/V03.01//Auslieferung/2015-06-03/en

copyright by
LIEBHERR

Name	Length	Number
Railing part4	1390 mm 4‘ 7“ ft-in	1

Tab. 458: Overview of railing parts

Note

Liebherr recommends:
▶ ensure that sufficient space is available.

▶ Sort railing parts.

▶ Position railing parts next to machine at the corresponding installation site.

Installing railing parts

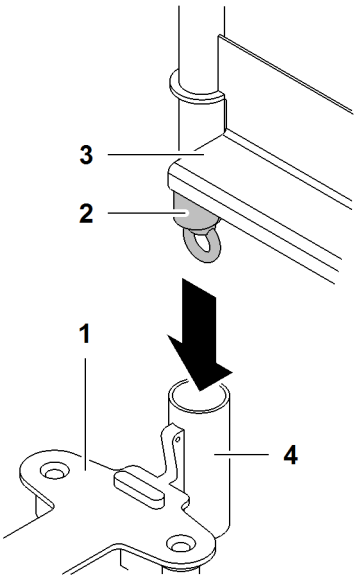

Fig. 2844: Installing railing part

1	Bracket	**3**	Railing part
2	Eye bolt for railing stabilization	**4**	Support for railing part

▶ Undo eye bolt **2**.
  ▷ Wedge of railing stabilization comes undone.

▶ Insert railing part **3** at supports **4**.

LWN/LR.x/V03.01//Auslieferung/2015-06-03/en

copyright by
LIEBHERR

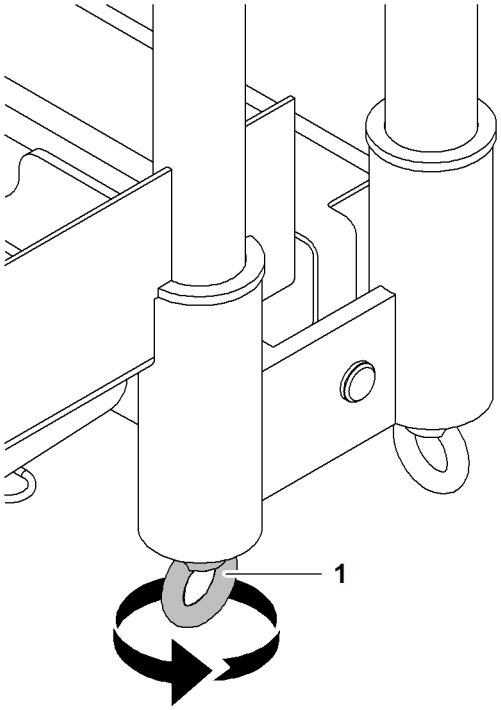

Fig. 2845: Securing the railing part

1 Eye bolt for railing stabilization

Note

Liebherr recommends:
▶ Grease thread of eye bolt **1**.

▶ Tighten eye bolt **1**.
▷ Wedge of railing stabilization secures the railing part.

▶ Repeat the procedure with all railing parts.
▷ Railing parts are installed.

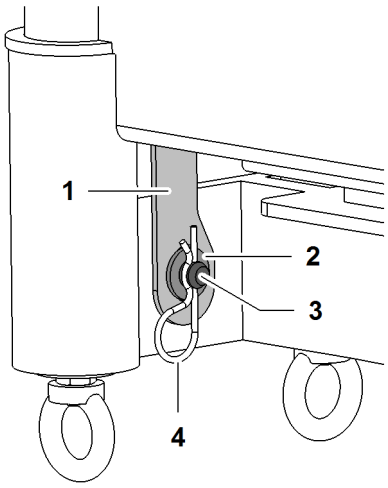

Fig. 2846: Securing the railing part with safety latch

1 Safety latch
2 Washer
3 Pin
4 Spring cotter pin

▶ Pin bracket with safety latch **1**.

LWN/LR.x/V03.01//Auslieferung/2015-06-03/en

copyright by
LIEBHERR

▶ Secure pin **3** with washer **2** and spring cotter pin **4**.

▶ Repeat procedure with all railing parts with safety latch **1**.

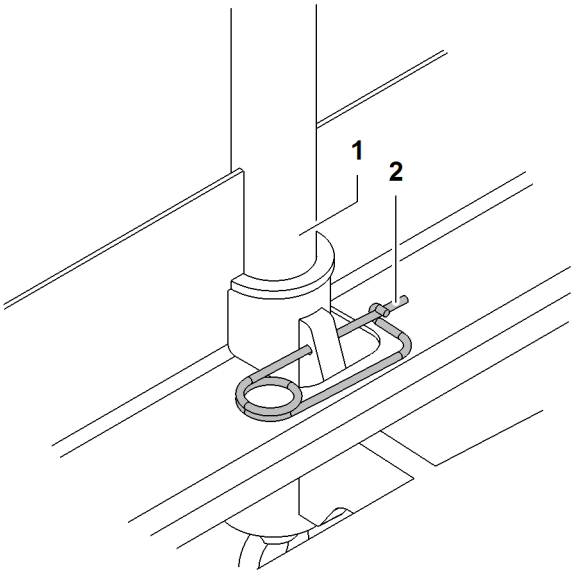

Fig. 2847: Securing the railing part with spring cotter pin

1 Railing part **2** Spring cotter pin

▶ Secure railing part **1** with spring cotter pin **2**.

▶ Repeat procedure with all railing parts **1** with spring cotter pin **2**.

Installing grating A and grating B for left platform

▶ Lift grating A and grating B for left platform onto brackets.

LWN/LR.x/V03.01//Auslieferung/2015-06-03/en

copyright by
LIEBHERR

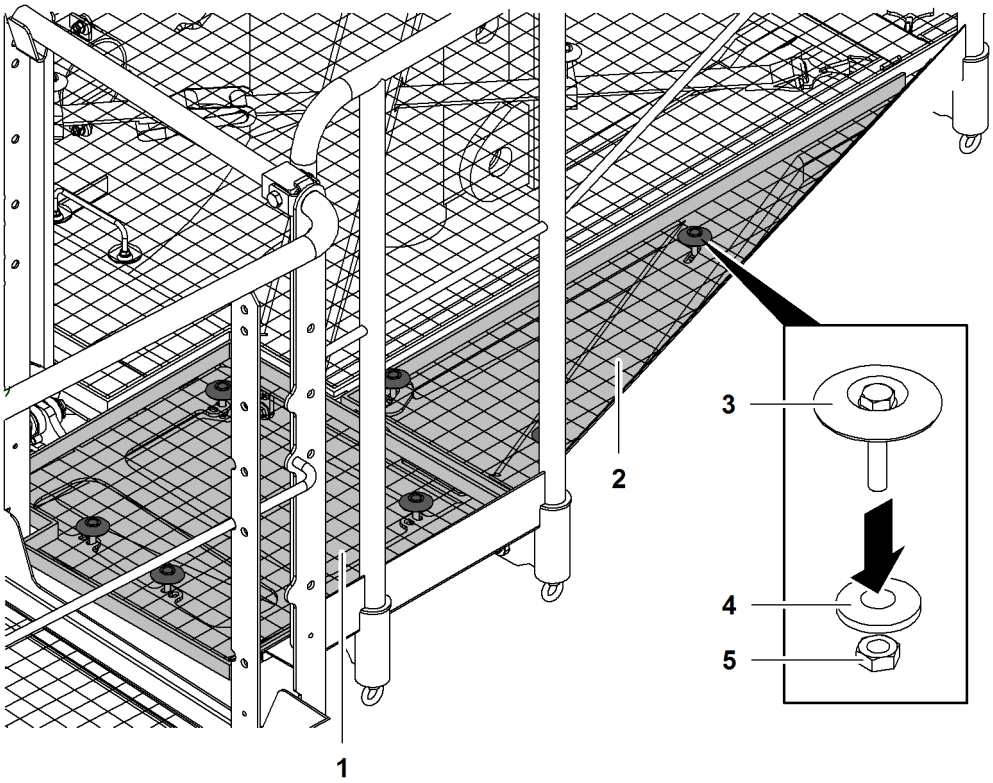

Fig. 2848: Installing grating A and grating B for left platform

1	Grating A for left platform	**4**	Washer (7x)
2	Grating B for left platform	**5**	Nut (7x)
3	Screw (7x) with plate		

Bracket KnK1 has four attachment points for gratings.

Plate5 has three attachment points for gratings.

▶ Insert screw **3** with plate at grating and attachment point.

▶ Secure screw **3** with washer **4** and nut **5**.

▶ Repeat procedure on all attachment points.
  ▷ Grating A and grating B for left platform are installed.

LWN/LR.x/V03.01//Auslieferung/2015-06-03/en

copyright by
LIEBHERR

Installing the grating

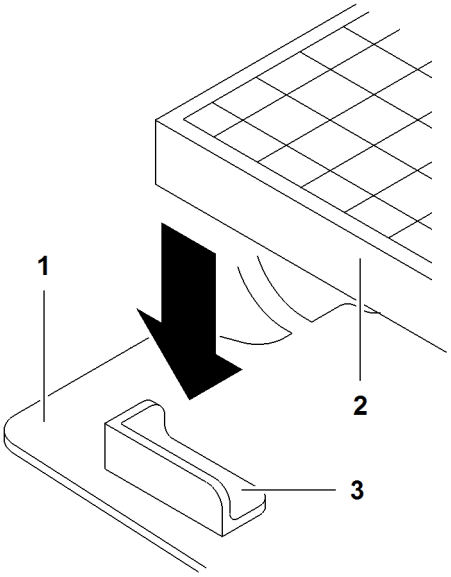

Fig. 2849: Installing the grating

1 Bracket
2 Grating
3 Guide for grating

▶ Insert grating **2** in guide **3**.

▶ Repeat procedure with all gratings **2**.

Installing the strap support

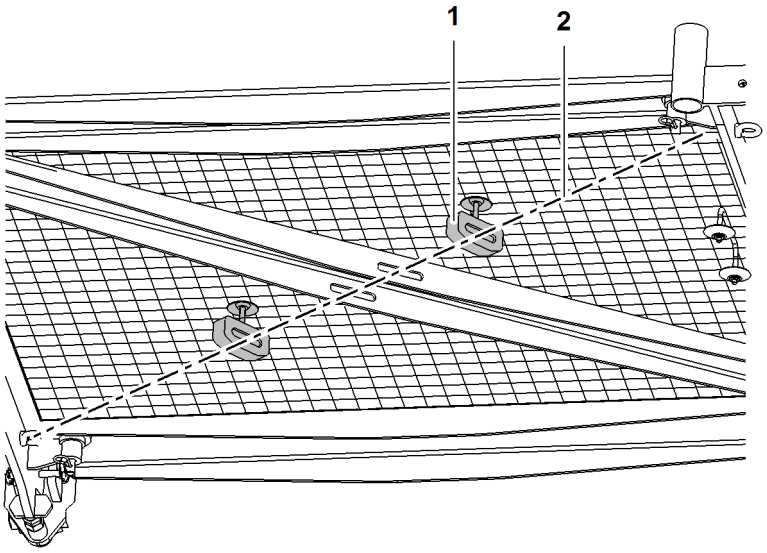

Fig. 2850: Installing the strap support

1 Strap support
2 Diagonal

▶ Position strap support **1** with the help of the diagonal **2**.

▶ Insert screw with plate from above at the grating.

▶ Attach Strap support **1** from below with screw.

▶ Repeat procedure on all strap supports **1**.

LWN/LR.x/V03.01//Auslieferung/2015-06-03/en

copyright by
LIEBHERR

▷ Strap supports **1** are installed.

Installing straps

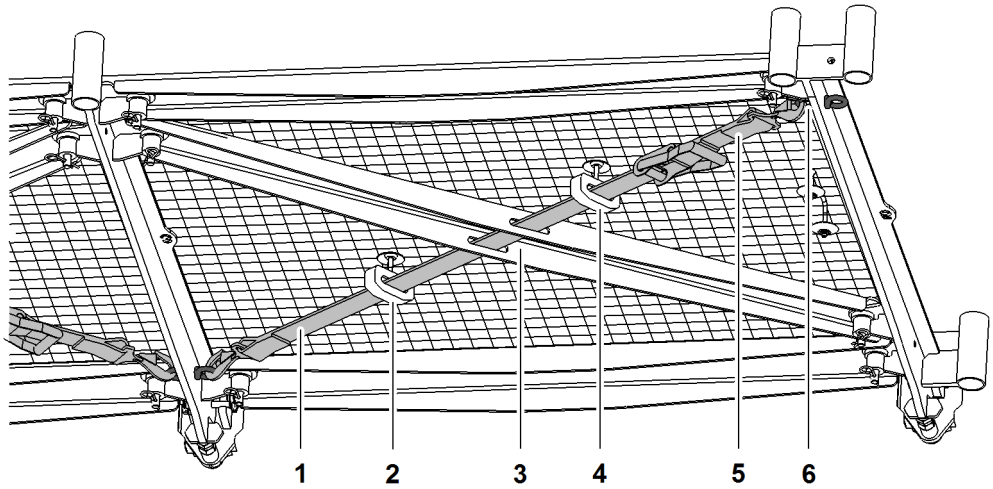

Fig. 2851: Installing straps

1	Strap	**4**	Strap support
2	Strap support	**5**	Strap with ratchet
3	Diagonal	**6**	Eye bolt (2x)

▶ Suspend strap **1** on eye bolt **6**.

▶ Pull strap **1** through strap support **2**.

▶ Pull strap **1** through diagonal **3**.

▶ Pull strap **1** through strap support **4**.

▶ Suspend strap **5** on eye bolt **6**.

▶ Pull strap **1** through ratchet.

▶ Tension strap **1** with ratchet.

▶ Repeat procedure with all straps **1 + 5**.
▷ Straps **1 + 5** are installed.

LWN/LR.x/V03.01//Auslieferung/2015-06-03/en

copyright by
LIEBHERR

Installing railing connections

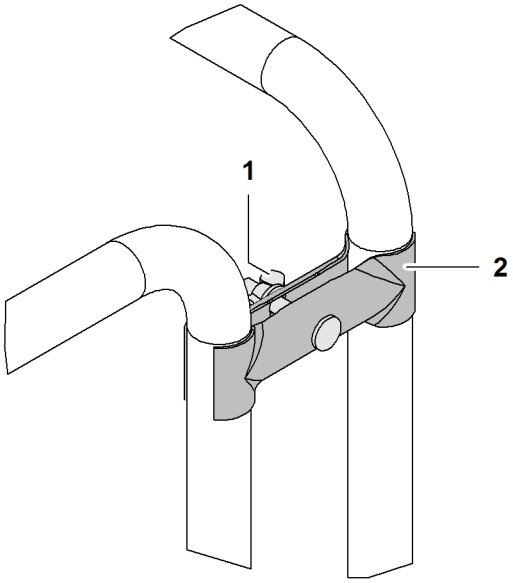

Fig. 2852: Installing railing connections

1 Wing nut **2** Railing connection

▶ Undo wing nut **1**.

▶ Insert railing connection **2** between railing parts.

▶ Tighten wing nut **1**.

▶ Repeat procedure with all railing connections **2**.
▷ Railing connections **2** are installed.

Mounting uppercarriage ladder for narrow track

This ladder is only available with undercarriage* with adjustable track width.

LWN/LR.x/V03.01//Auslieferung/2015-06-03/en

copyright by
LIEBHERR

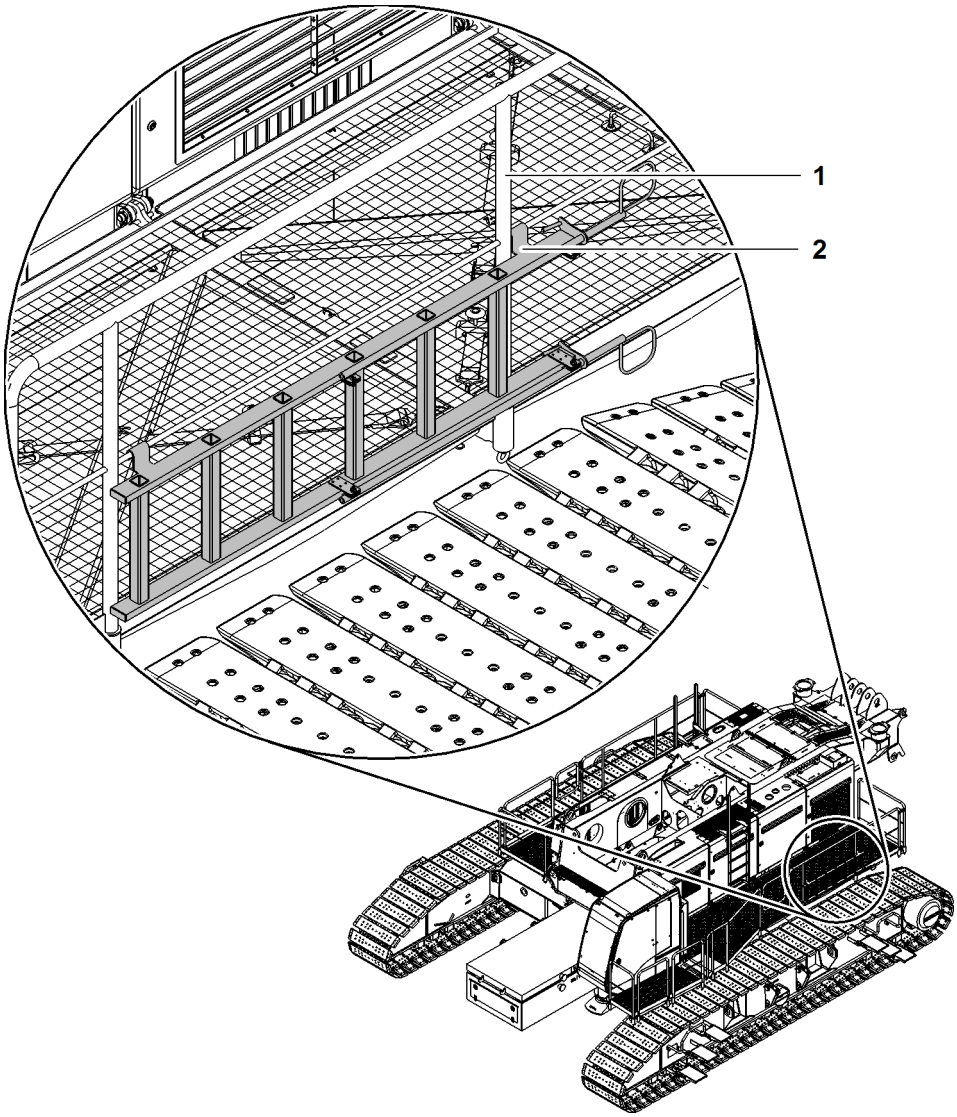

Fig. 2853: Mounting uppercarriage ladder for narrow track

1 Railing **2** Uppercarriage ladder

▶ Suspend uppercarriage ladder **2** on railing **1**.

7.4.7 Mounting the ladder on the uppercarriage

The ladder is mounted on the left side of the uppercarriage.

If a second, optional ladder* is supplied, it is mounted on the right side of the uppercarriage.

If the machine is equipped with hydraulic cabin elevation*, the ladder on the left side of the uppercarriage can only installed after the hydraulic cabin elevation mast was erected.

CAUTION
Improper mounting of ladder!
Fall from ladder.

▶ Secure pin with linchpins.

▶ Check ladder for damage and tears prior to ascending.

LWN/LR.x/V03.01//Auslieferung/2015-06-03/en

copyright by LIEBHERR

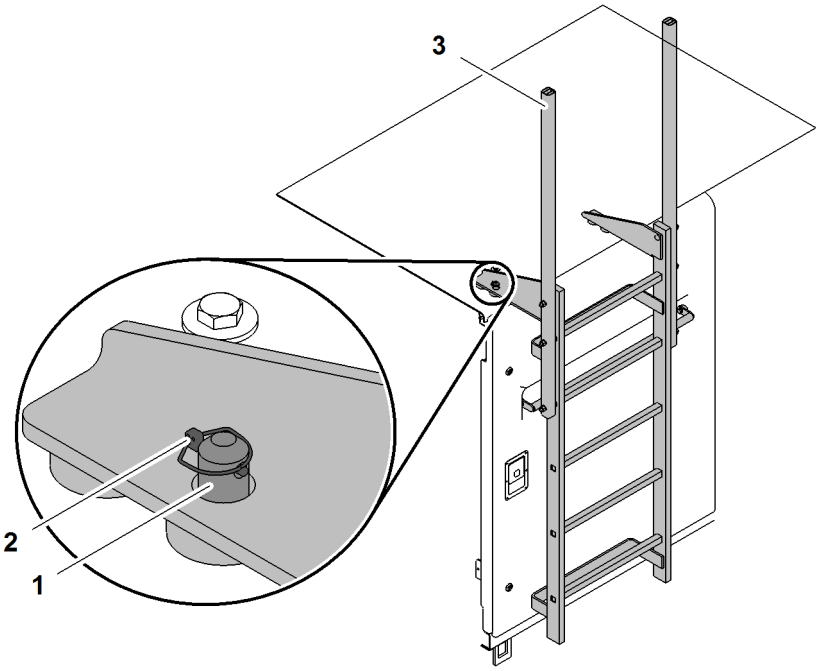

Fig. 2854: Mounting the ladder on the uppercarriage

1	Pin (2x) (2x)	**3**	Ladder

▶ Attach ladder **3** to pins **1**.

▶ Secure pin **1** with linchpins **2**.

7.4.8 Mounting the uppercarriage railing

WARNING
Walking on uppercarriage without appropriate safety provisions!
Risk of falling off the uppercarriage.

▶ A fall arrest system must be worn when working on the uppercarriage.

Uppercarriage railings must be mounted to provide a safe working environment.

If the machine is equipped with hydraulic cabin elevation*, the uppercarriage railing on the left side of the uppercarriage can only installed after the hydraulic cabin elevation mast was erected.

Assembly of the different uppercarriage railings is identical.

LWN/LR.x/V03.01//Auslieferung/2015-06-03/en

copyright by
LIEBHERR

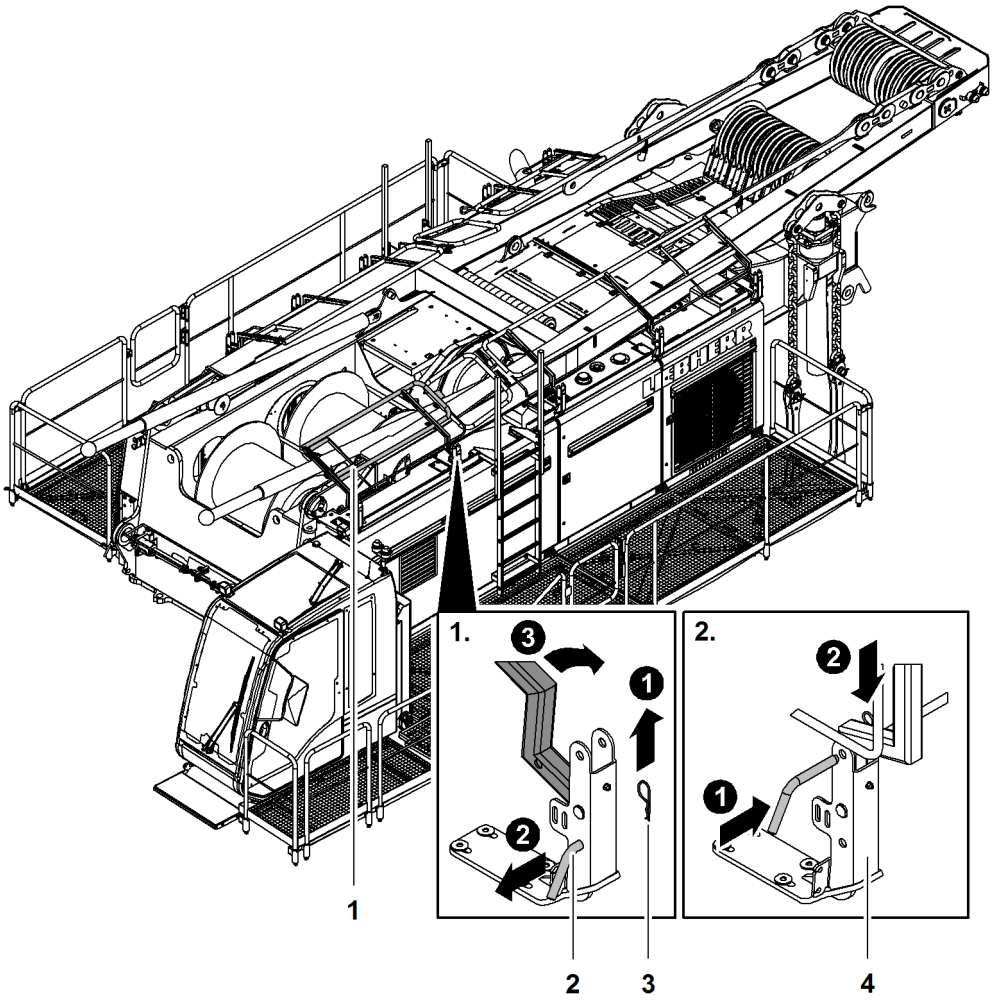

Fig. 2855: Installing the left front uppercarriage railing

1	Left front uppercarriage railing	**3**	Spring cotter pin (2x)
2	Pin (2x)	**4**	Bracket (2x)

▶ Remove spring cotter pin **3** and pin **2**.

▶ Fold up left front uppercarriage railing **1**.

▶ Pin left front uppercarriage railing **1** with brackets **4**.

▶ Secure pins **2** with spring cotter pins **3**.

LWN/LR.x/V03.01//Auslieferung/2015-06-03/en

copyright by
LIEBHERR

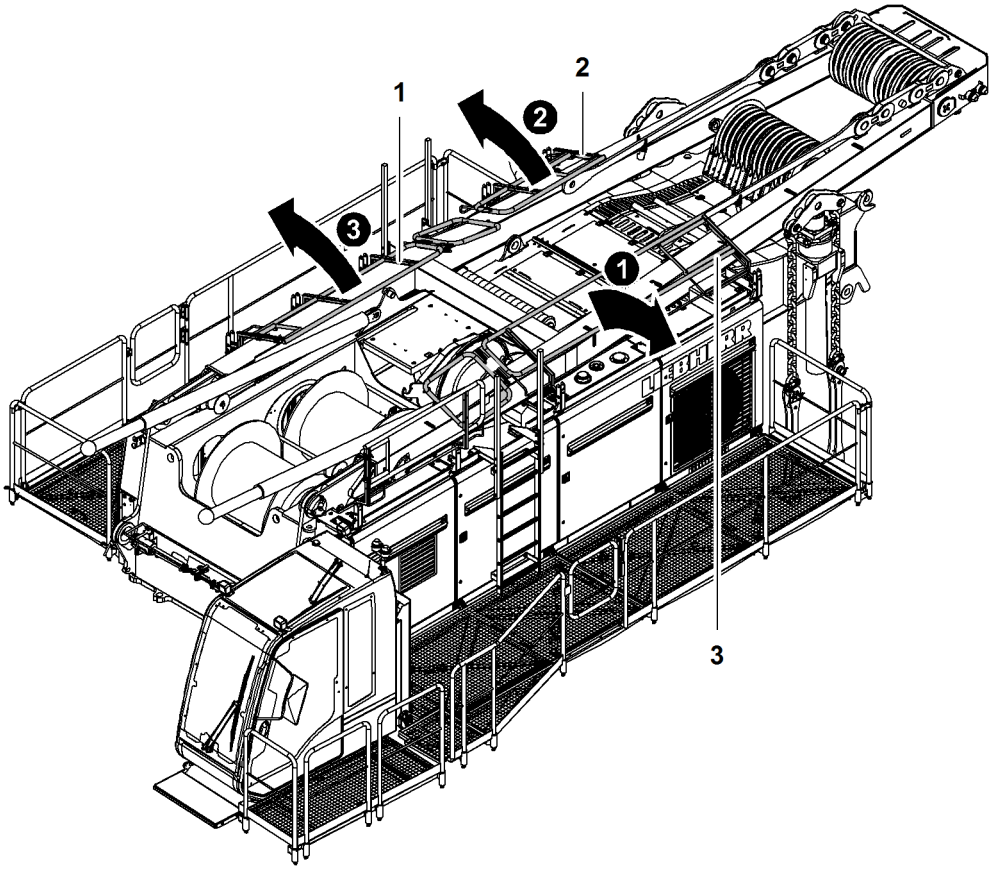

Fig. 2856: Mounting the uppercarriage railing

1 Right front uppercarriage railing
2 Right rear uppercarriage railing
3 Left rear uppercarriage railing

▶ Mount left rear uppercarriage railing **3** as described above.

▶ Mount right rear uppercarriage railing **2** as described above.

▶ Mount right front uppercarriage railing **1** as described above.

LWN/LR.x/V03.01//Auslieferung/2015-06-03/en

copyright by
LIEBHERR

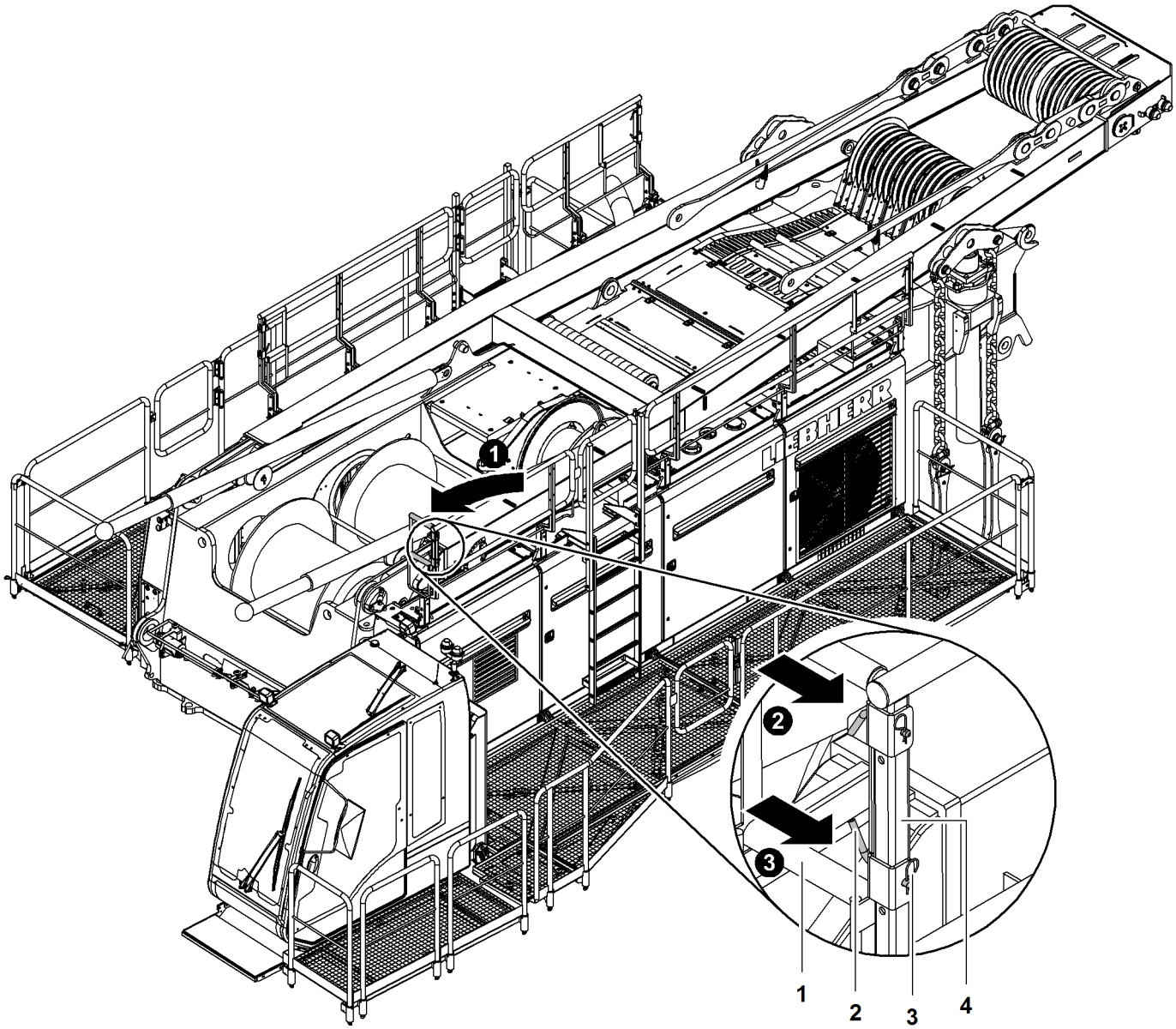

Fig. 2857: Mounting the left front uppercarriage railing part

1 Left front uppercarriage railing part
2 Pin (2x)
3 Spring cotter pin (2x)
4 Left front uppercarriage railing

- ▶ Deinstall left front uppercarriage railing part **1** on left front uppercarriage railing **4**.
- ▶ Insert left front uppercarriage railing part **1** in pin connection position.
- ▶ Pin left front uppercarriage railing part **1** with left front uppercarriage railing **4**.
- ▶ Secure pins **2** with spring cotter pins **3**.

LWN/LR.x/V03.01//Auslieferung/2015-06-03/en

copyright by LIEBHERR

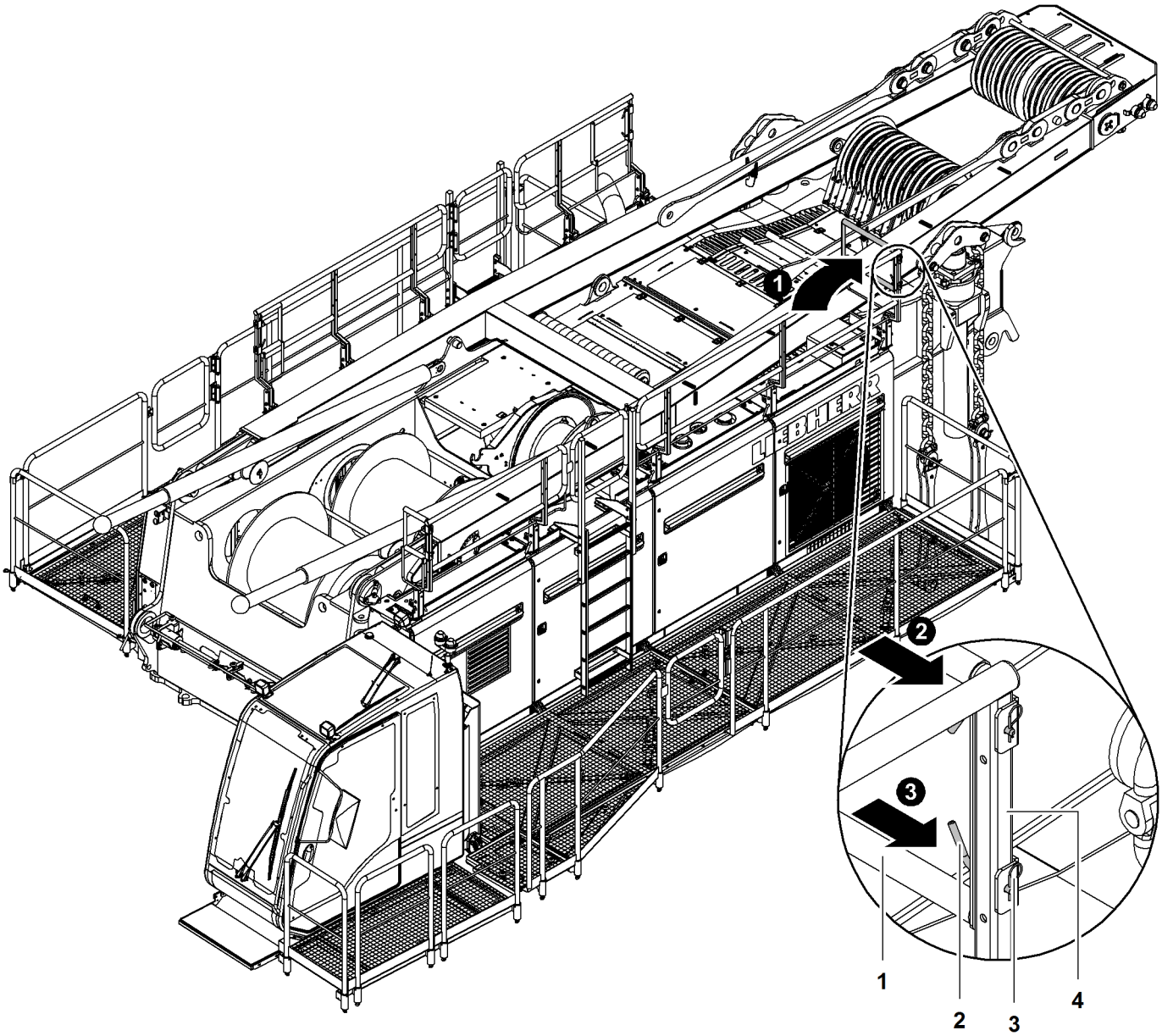

Fig. 2858: Mounting the left rear uppercarriage railing part

1	Left rear uppercarriage railing part	**3**	Spring cotter pin (2x)
2	Pin (2x)	**4**	Left rear uppercarriage railing

- ▶ Deinstall left rear uppercarriage railing part **1** on left rear uppercarriage railing **4**.
- ▶ Insert left rear uppercarriage railing part **1** in pin connection position.
- ▶ Pin left rear uppercarriage railing part **1** with left rear uppercarriage railing **4**.
- ▶ Secure pins **2** with spring cotter pins **3**.

LWN/LR.x/V03.01//Auslieferung/2015-06-03/en

copyright by LIEBHERR

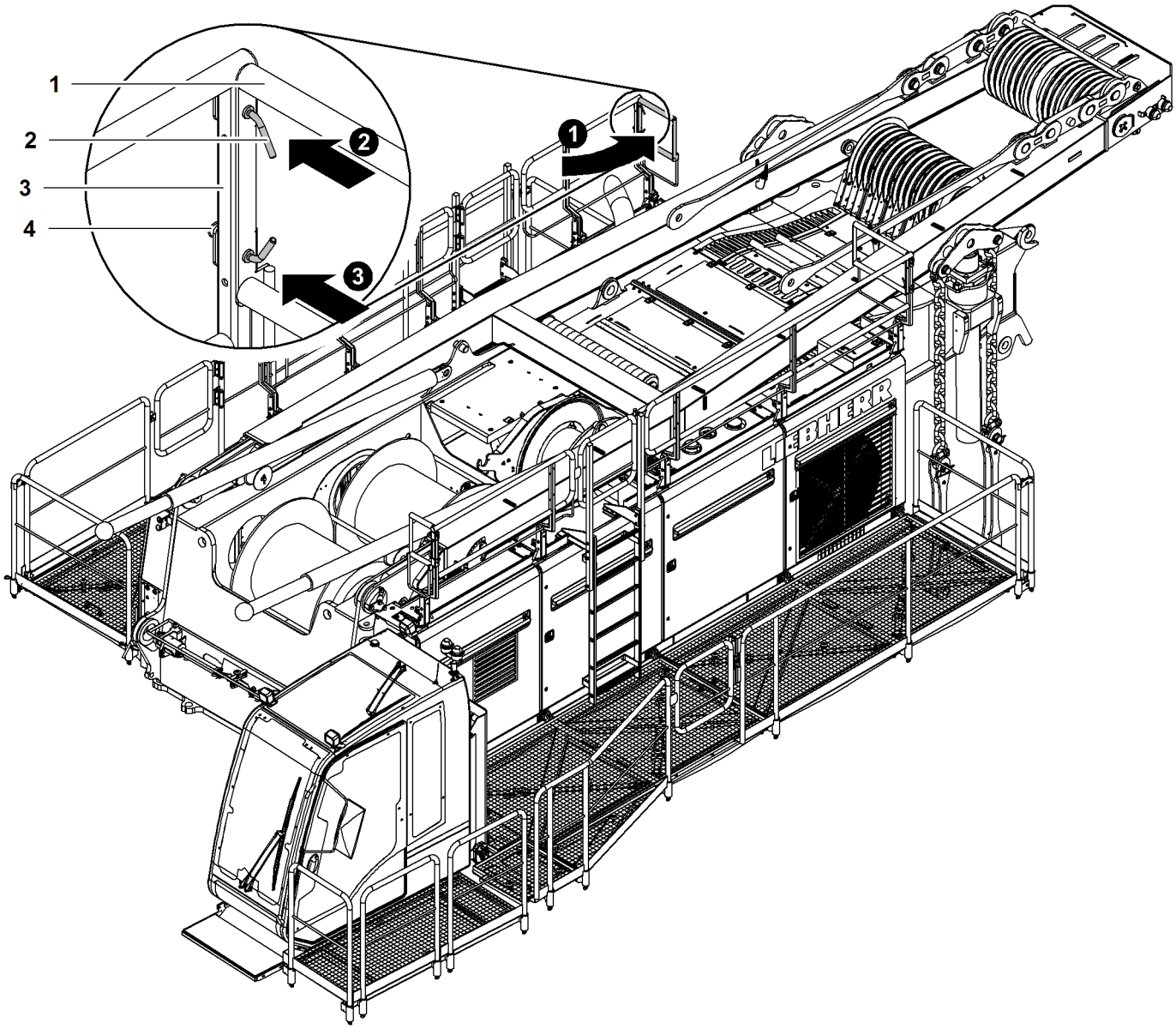

Fig. 2859: Mounting the right rear uppercarriage railing part

1 Right rear uppercarriage railing part
2 Pin (2x)
3 Right rear uppercarriage railing
4 Spring cotter pin (2x)

- ▶ Deinstall right rear uppercarriage railing part **1** on right rear uppercarriage railing **3**.
- ▶ Insert right rear uppercarriage railing part **1** in pin connection position.
- ▶ Pin right rear uppercarriage railing part **1** with right rear uppercarriage railing **3**.
- ▶ Secure pins **2** with spring cotter pins **4**.

LWN/LR.x/V03.01//Auslieferung/2015-06-03/en

copyright by
LIEBHERR

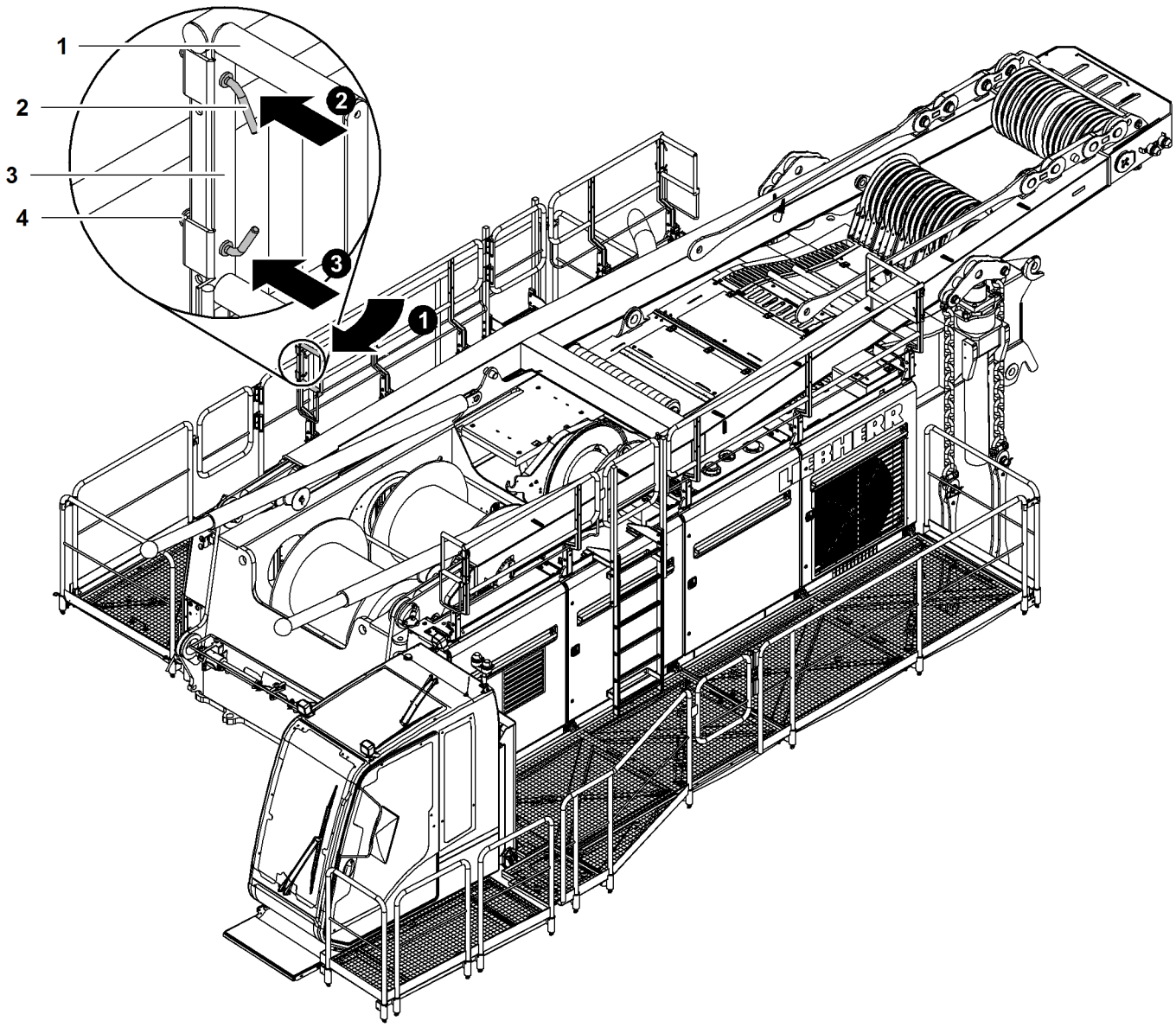

Fig. 2860: Mounting the right front uppercarriage railing part

1	Right front uppercarriage railing part	**3**	Right front uppercarriage railing
2	Pin (2x)	**4**	Spring cotter pin (2x)

- ▶ Deinstall right front uppercarriage railing part **1** on right front uppercarriage railing **3**.
- ▶ Insert right front uppercarriage railing part **1** in pin connection position.
- ▶ Pin right front uppercarriage railing part **1** with right front uppercarriage railing **3**.
- ▶ Secure pins **2** with spring cotter pins **4**.

7.4.9 Fitting the exhaust pipe

For transportation, the end pipe was removed from the exhaust pipe to reduce the transport height.

LWN/LR.x/V03.01//Auslieferung/2015-06-03/en

copyright by
LIEBHERR

CAUTION
Exhaust pipe hot!
risk of burns to hands.

▶ Never touch the exhaust pipe before it has cooled down.

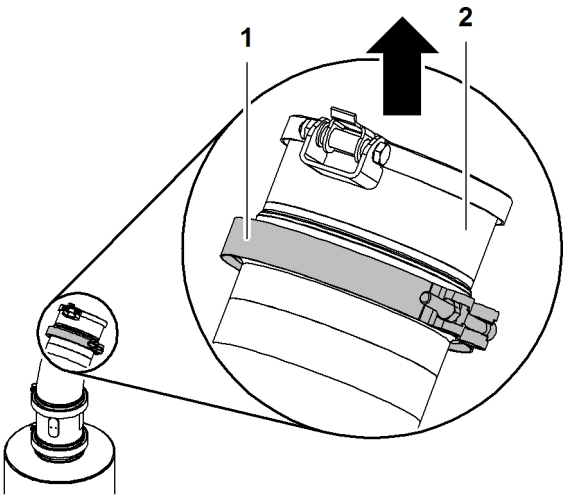

Fig. 2861: Exhaust pipe in transport position

1 Pipe clamp **2** Exhaust valve

▶ Undo pipe clamp **1**.

▶ Take exhaust valve **2** off of exhaust pipe and put aside.

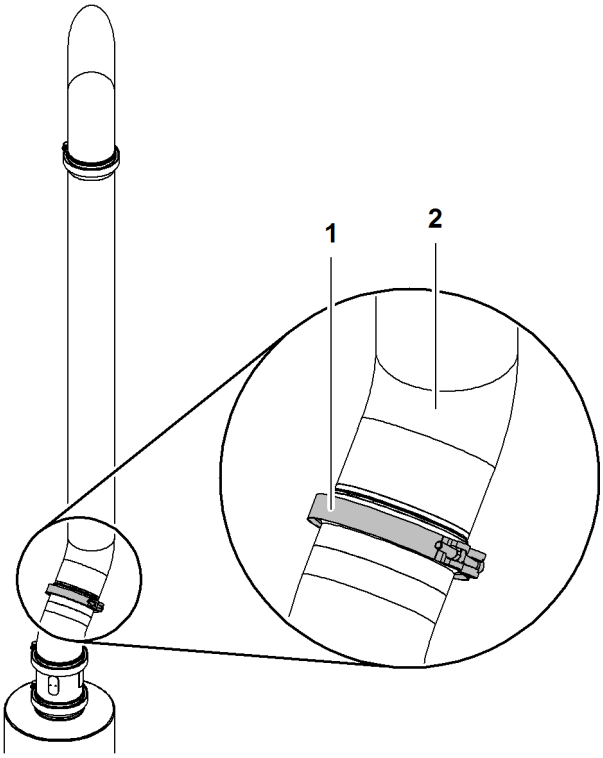

Fig. 2862: Exhaust pipe in working position

1 Pipe clamp **2** End pipe

LWN/LR.x/V03.01//Auslieferung/2015-06-03/en

copyright by
LIEBHERR

▶ Put end pipe **2** onto exhaust pipe.

▶ Tighten pipe clamp **1**.

7.4.10 Checking the position of the bypass plug

Open the front right-hand side doors on the uppercarriage to access the electric box and bypass plug.

NOTICE
Ignition is switched on!
Risk of short circuit.

▶ Bypass plug and electric cable must not be plugged in/unplugged unless the machine has been switched off (ignition key in position 0).

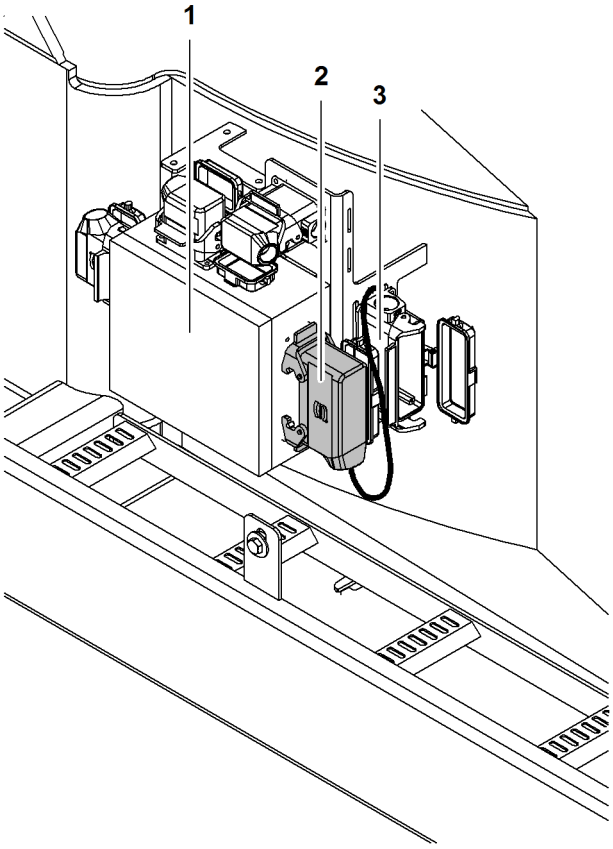

Fig. 2863: Checking the position of the bypass plug

1 Electric box
2 Bypass plug
3 Dummy socket

The bypass plug **2** must be plugged into the electric box **1** for assembly processes.

▶ Check plug position.

Troubleshooting
Wrong plug position?

▶ Unplug/plug in bypass plug **2**.

LWN/LR.x/V03.01//Auslieferung/2015-06-03/en

copyright by
LIEBHERR

7.4.11 Putting the machine into operation

▶ Carry out checks before starting the machine (For more information see: 4.1 Checks before start up, page 819) .

▶ Putting the machine into operation (For more information see: 4.2 Start-up, page 821) .

7.4.12 Switching on assembly mode functions

When assembly mode functions are switched on, the following functions can be switched on:
– *Bypass limit switch*
– *Cylinder adjustment functions*

WARNING
Changed control lever function assignment when machine functions activated!
Operating errors to the machine.

▶ Be aware of changed control lever function assignment .

Fig. 2864: Symbol Assembly functions

The *Assembly functions* symbol indicates whether assembly functions are switched on.

If the assembly functions are not switched on:
▶ Press the *Assembly functions* switch on control panel *X12*.

▷ Assembly functions switched on.
▷ Switch *Assembly functions* is lit.
▷ Flashing light is on.
▷ The *Assembly functions* symbol appears on the monitor:

Fig. 2866: Symbol Assembly functions

7.4.13 Switching on cylinder adjustment functions

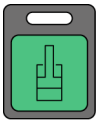

▶ Press the *Cylinder adjustment functions* button on control panel *X23*.
▷ Cylinder adjustment functions of the machine are activated.

LWN/LR.x/V03.01//Auslieferung/2015-06-03/en

copyright by LIEBHERR

7.4.14 Extend the tilting back support cylinders

▶ Press the button *Extend tilting back support cylinders* on control panel *12* until the tilting back support cylinders are extended halfway.

7.4.15 Erecting A-frame1

Ensure that the following conditions are fulfilled:
❑ Cylinder adjustment functions are on.

DANGER
Machine must not be lifted when A-frame1 is laid down!
Toppling of machine.

▶ Erect A-frame1 before raising the machine.

▶ Press the *Extend A-frame1 cylinder* button on control panel *X23*.

NOTICE
Slack rope when erecting A-frame1!
Damage to the rope of the main boom luffing winch.

▶ In cold weather when ropes are stiff only move A-frame1 slowly to ensure that the rope does not form any slack.

▶ If the rope goes slack, check the rope, the run of the rope on the pulley set, and the winding of the rope on the winch.

Note

Liebherr recommends:
▶ Move A-frame1 exclusively at speed level 2 of the boom adjuster and in the medium engine rpm range.

▶ Critical angle on instruction plate *Observe angle limitations A-frame1*.

▶ Unwind the main boom luffing winch.
▷ A-frame1 erects itself:

LWN/LR.x/V03.01//Auslieferung/2015-06-03/en

copyright by
LIEBHERR

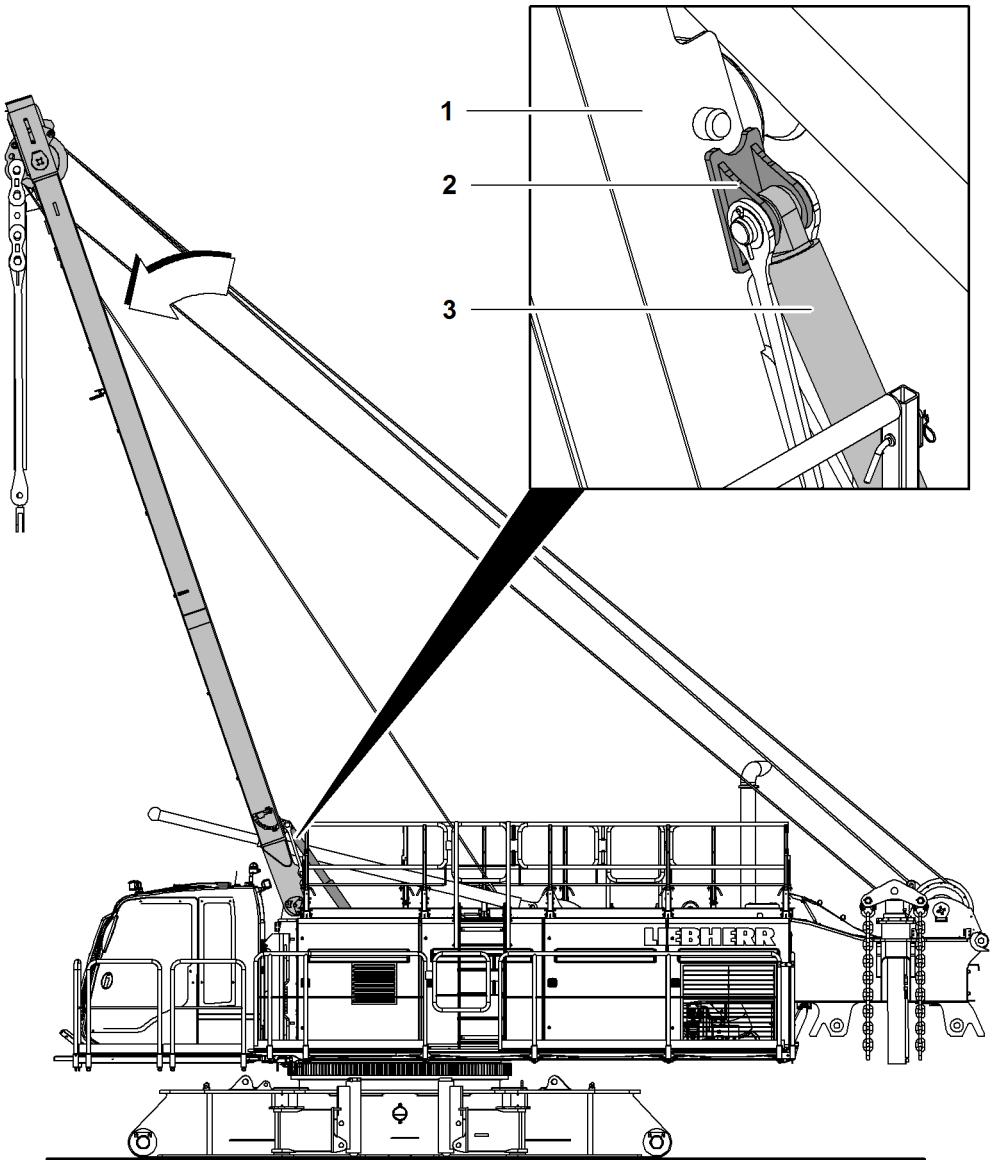

Fig. 2870: A-frame1 erects itself

1 A-frame1
2 Slab (2x)
3 A-frame1 cylinder (2x)

▶ Erect A-frame1 **1** until the slabs **2** of the A-frame1 cylinders **3** lift off.

7.4.16 Unloading the machine

In order to unload it from the transport vehicle and assemble the crawler side frame, the machine must be supported on the ground using jacks.

Ensure that the following conditions are satisfied:
- ❑ The machine is equipped with jacks for self-assembly.
- ❑ Checks before start-up were carried out.
- ❑ Fitters are instructed.
- ❑ All safety measures are being observed (For more information see: 7.2 Implementation instructions for assembly and disassembly, page 1109) .
- ❑ Mechanical boom angle indicator is checked to ensure it is working correctly and moving freely.
- ❑ The bypass plug is connected.
- ❑ The cab is in the working position.

LWN/LR.x/V03.01//Auslieferung/2015-06-03/en

copyright by LIEBHERR

- ❑ The cab's boom walkways are in the working position.
- ❑ The intermediate exhaust pipe section is attached.
- ❑ Operator's seat is correctly adjusted.
- ❑ Assembly functions switched on.
- ❑ Cylinder adjustment functions on.

Unloading machine with undercarriage with fixed track width

DANGER
Incorrect unloading of machine!
Machine toppling over.

- ▶ Ensure machine operator remains in cab during entire jack-up process.
- ▶ Check the spirit level in the cab and on the undercarriage.
- ▶ The load-bearing capacity of the ground must be tested before you start to jack up the machine.
- ▶ Never use the jack with the rear counterweight or boom base section attached.

Placing the swing brackets in the support position

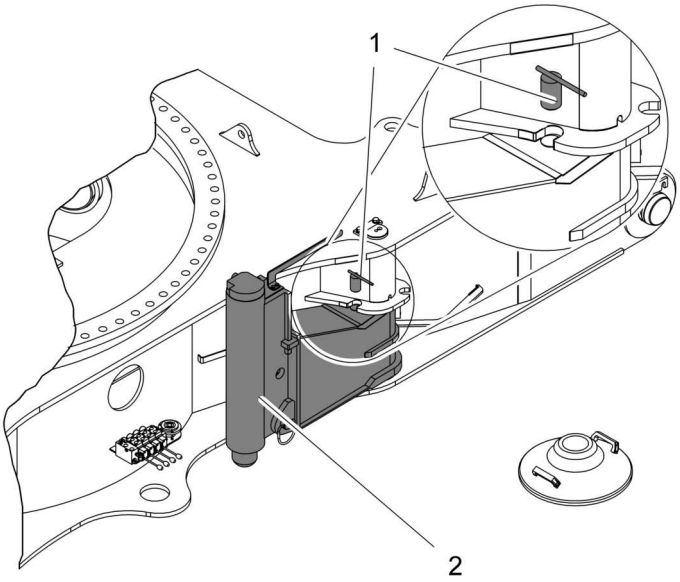

Fig. 2871: Swivelling the swing brackets into the support position

1 Pin **2** Swing bracket

- ▶ Remove the pin **1**.
- ▶ Swivel the swing bracket **2** into the support position.

DANGER
Non-bolted swing brackets!
Machine toppling over.

- ▶ Bolt the swing brackets in the support position.

LWN/LR.x/V03.01//Auslieferung/2015-06-03/en

copyright by LIEBHERR

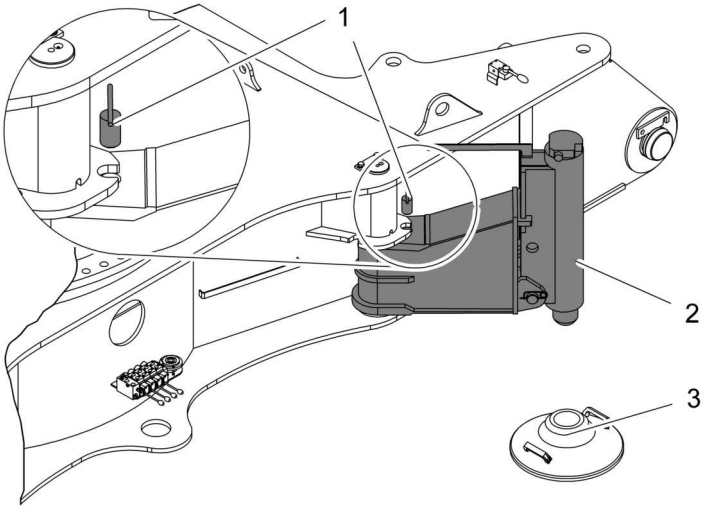

Fig. 2872: Bolting the swing brackets in the support position

1 Pin
2 Swing bracket
3 Support pad

▶ Insert the pin **1**.

▶ Repeat procedure with all slewing brackets **2**.

Fitting support pads and chocks

DANGER
Incorrect use of support pads and chocks!
Machine toppling over.

▶ Use the support pads fixed to the undercarriage.

▶ Add stable material over a sufficiently wide area under the support pads if necessary.

▶ Chock all support pads with the same material.

▶ Make sure that chocks do not protrude into the transport vehicle's track.

LWN/LR.x/V03.01//Auslieferung/2015-06-03/en

copyright by
LIEBHERR

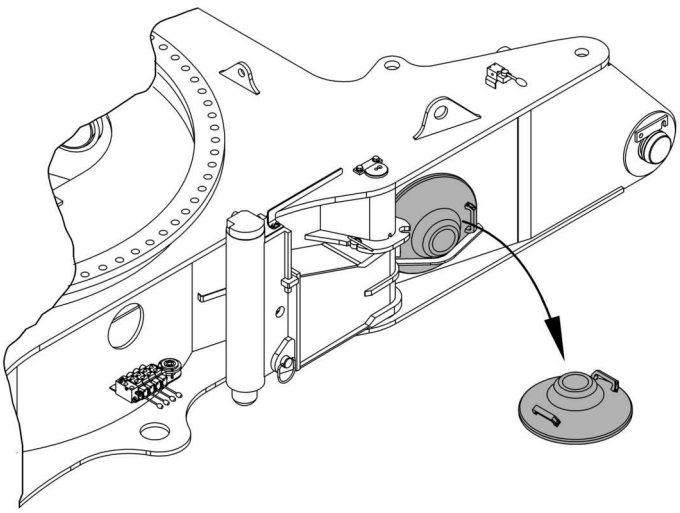

Fig. 2873: Chocking support pads

- ▶ Take support pad out of bracket.
- ▶ Place support pad below jack flat on the ground or on bedding layers.
- ▶ Repeat procedure with all jacks.

Determining the jack-up height

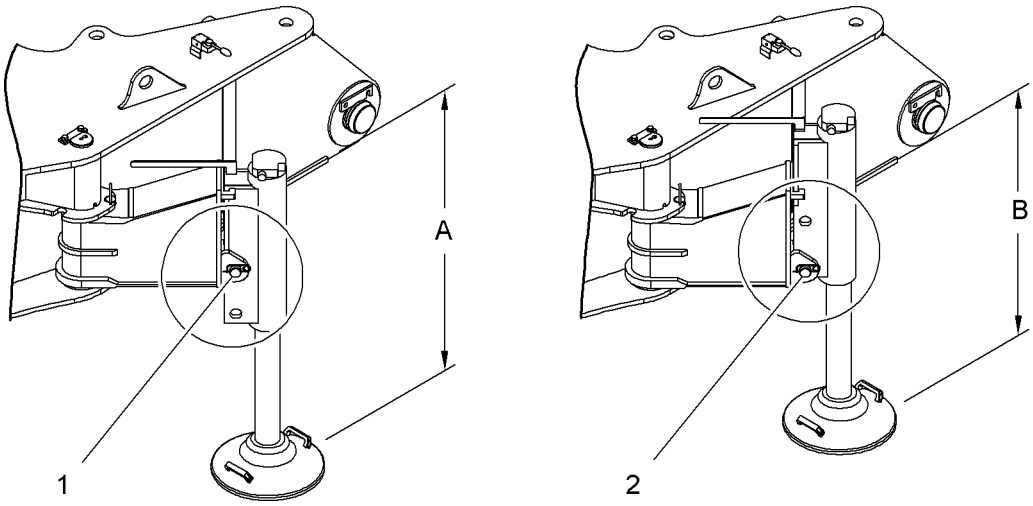

Fig. 2874: Determining the jack-up height

1 Jack in top pin connection position **2** Jack in bottom pin connection position

	Jack-up height **A**	Jack-up height **B**
Standard cylinder	975 mm 3‘ 2“ ft-in	725 mm 2‘ 5“ ft-in
Telescopic cylinder	1415 mm 4‘ 8“ ft-in	1165 mm 3‘ 10“ ft-in

Tab. 459: Determining the jack-up height

The jacks can be bolted to the swing brackets in two positions.

LWN/LR.x/V03.01//Auslieferung/2015-06-03/en

copyright by LIEBHERR

The jack-up height needed to unload the machine depends on the:
– Height of the transport vehicle
– soil composition on the site
– version of the hydraulic jack (standard or telescopic)

Example:
– Distance from floor to loading platform of the transport vehicle: 1000 mm (3‘ 3“ ft-in)
– Safety distance between undercarriage of basic machine and transport vehicle loading platform: 100 mm (3.94“ in)
– Jack-up height of the jacks: 975 mm (3‘ 2“ ft-in)
– Soil composition: Flat asphalt with adequate capacity

Result: place shim with thickness of 100 mm (3.94“ in) underneath.

Setting the jack-up height of the jacks

When the jack-up height was determined, if it was shown that the position of the jack needed to be changed, then the following process steps should be carried out.

DANGER
Different jack-up heights!
Machine toppling over.

▶ Pin all jacks to same pin connection points on slewing brackets.

DANGER
Incorrect raise of the machine!
Machine toppling over.

▶ Extend the jack until the strain on the pin is relieved.

▶ Do not raise the machine.

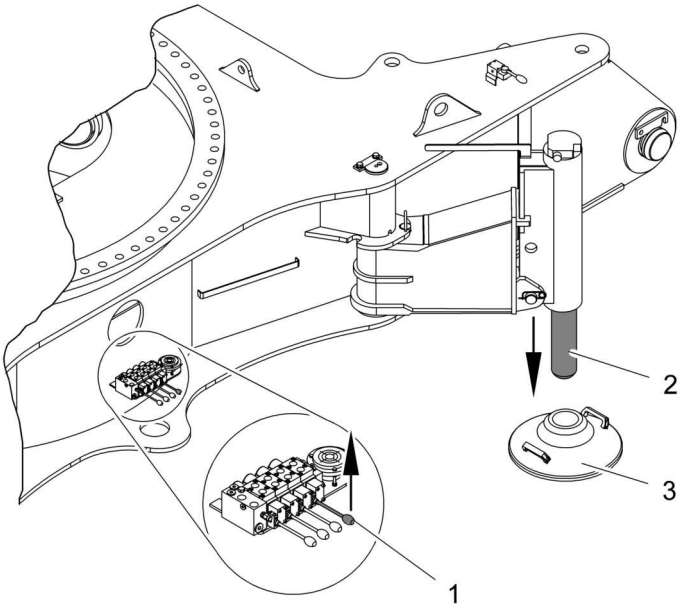

Fig. 2875: Extending the jack

1 Control lever
2 Jack
3 Support pads

LWN/LR.x/V03.01//Auslieferung/2015-06-03/en

- ▶ Extend the jack **2** using the appropriate control lever **1**.
- ▶ Alignsupport pads **3** if necessary.
- ▶ Extend jack **2** until the pin can be turned by hand.

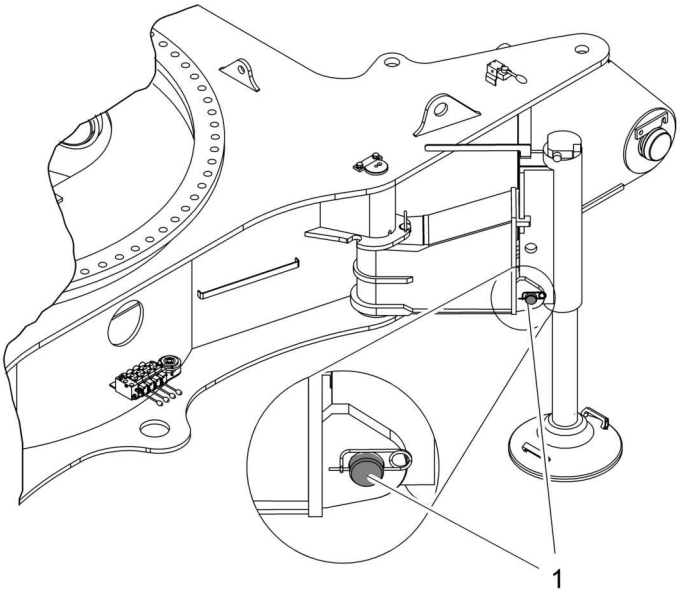

Fig. 2876: Removing pins

1 Pins

- ▶ Remove the pin **1**.

CAUTION
Moving parts!
Risk of crushing limbs.

- ▶ Keep all limbs well clear of moving parts.
- ▶ Visually check that the pin connection points are aligned.

LWN/LR.x/V03.01//Auslieferung/2015-06-03/en

copyright by
LIEBHERR

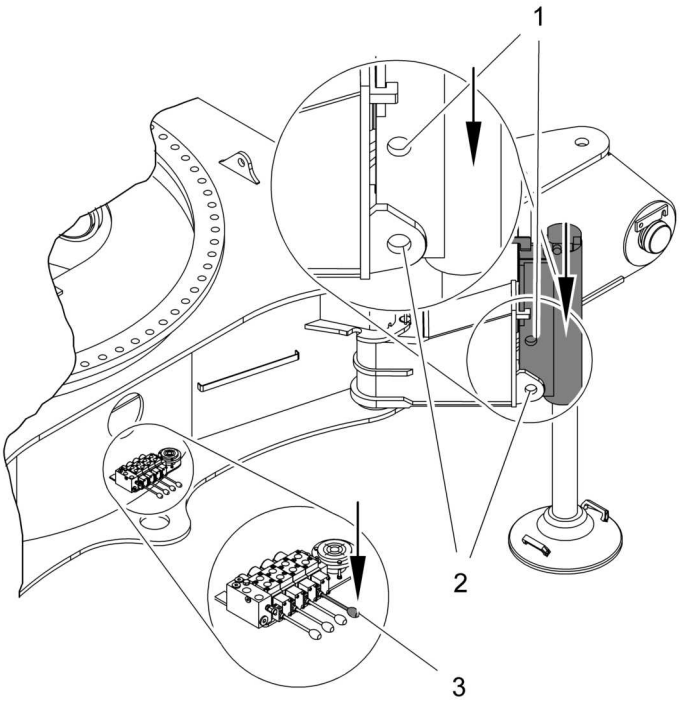

Fig. 2877: Adjusting a pin connection point

1 Top pin connection point
2 Bottom pin connection point
3 Control lever

▶ Retract jacks with the corresponding adjustment lever **3**.
▷ The top part of the jack moves.

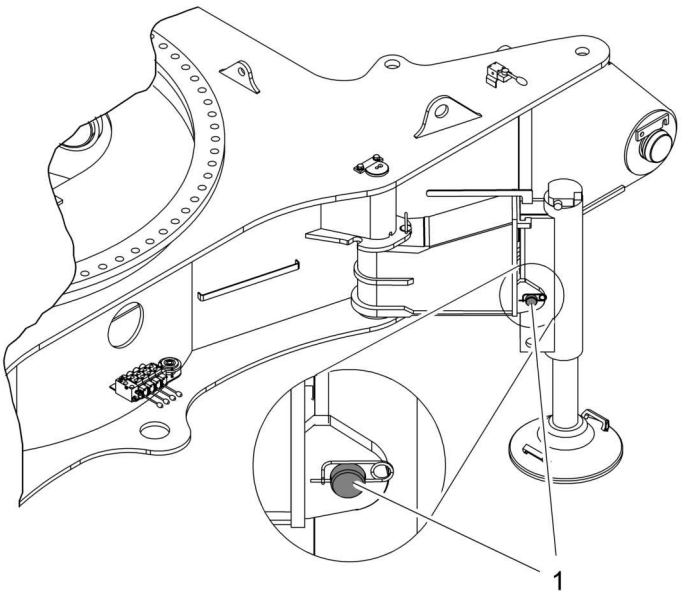

Fig. 2878: Inserting pins

1 Pin

When the pin connection point on the swing bracket is aligned with the upper pin connection point of the jack:
▶ Insert pin **1**.

LWN/LR.x/V03.01//Auslieferung/2015-06-03/en

▶ Secure pin **1** with locking spring.

▶ Repeat procedure with all jacks.

Extending the jack

DANGER
If the jacks are extended unevenly!
Machine toppling over.

▶ Ensure that air bubble in spirit level does not cross outer ring.

▶ Make sure that one or more assistants monitor the jack-up process.

The jacks can be operated using the control levers on the undercarriage.

Several levers can be actuated at the same time.

The air bubble in the spirit level must stabilise in the innermost circle with no additional bubbles.

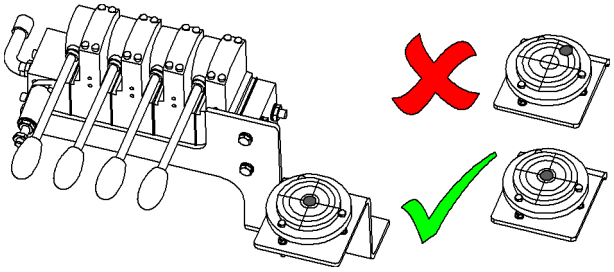

Fig. 2879: Spirit level on undercarriage

Note

Liebherr recommends:
▶ Always extend two support cylinders at the same time.

▶ Move control lever upwards.
  ▷ The jacks extend.
  ▷ The machine starts to rise.

▶ Move control lever downwards.
  ▷ The jacks retract.
  ▷ The machine lowers itself.

▶ Carefully and accurately level the machine.

Driving the transport vehicle out from underneath the machine

Ensure that the following conditions are satisfied:
❑ There is a clearance of at least 100 mm (3.94“ in) between the transport vehicle and the machine.
❑ The chocks between the transport vehicle and the machine were removed.
❑ There are no obstacles on the ground (e.g. rocks) that might cause the transport vehicle to deviate from its track.
❑ The transport vehicle can drive straight out from underneath the machine.
❑ The steering axles on the transport vehicle are straight.
❑ All jacks are extended all the way to the ground.

LWN/LR.x/V03.01//Auslieferung/2015-06-03/en

copyright by
LIEBHERR

DANGER
Collision of transport vehicle with jacks!
Machine toppling over.

▶ Make sure that one or more assistants direct the transport vehicle.

▶ Drive the transport vehicle out from underneath the machine.

Unloading machine with undercarriage* with adjustable track width

DANGER
Incorrect unloading of machine!
Toppling of machine.

▶ Make sure that the machine operator is located in the cabin during the entire jack-up process.

▶ Observe the spirit level in the cabin and on the undercarriage.

▶ Check ground for load-bearing capacity prior to jacking.

Placing the slewing bracket in support position

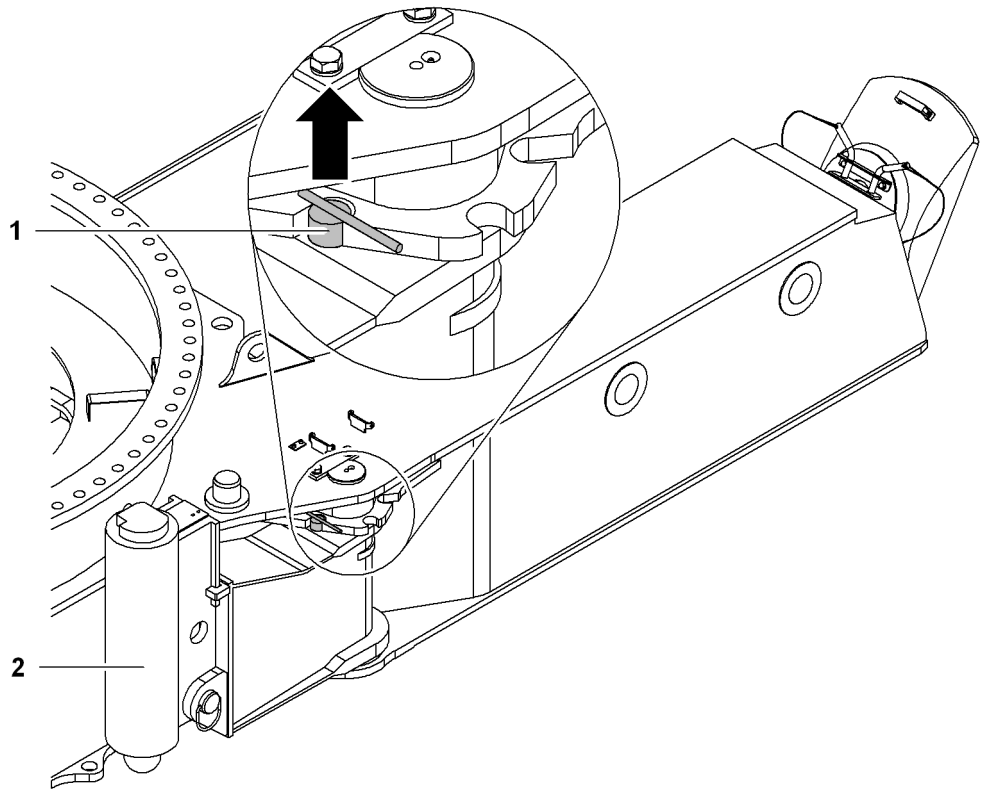

Fig. 2880: Placing the slewing bracket in support position

1 Pin
2 Slewing bracket

▶ Remove pin **1**.

LWN/LR.x/V03.01//Auslieferung/2015-06-03/en

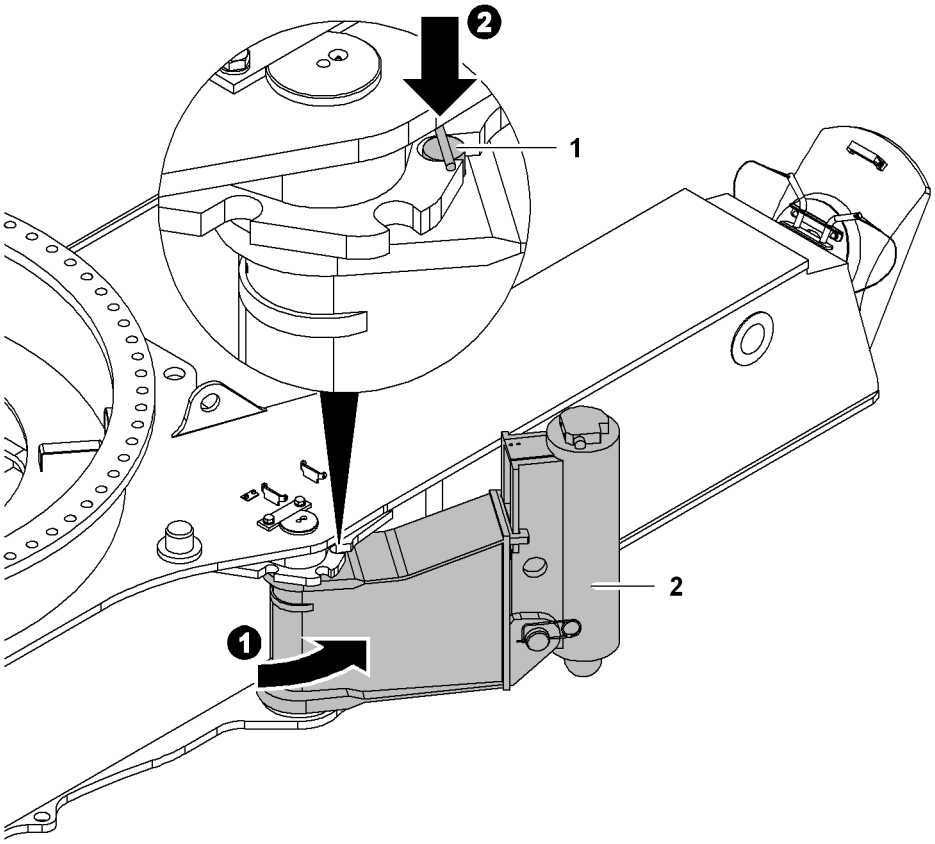

Fig. 2881: Swivel the slewing bracket and pin

1 Pin **2** Slewing bracket

▶ Slewing the slewing brackets **2** into support position.

DANGER
Slewing brackets not pinned!
Toppling of machine.

▶ Pin slewing brackets in support position.

▶ Insert pin **1**.

▶ Repeat procedure with all slewing brackets **2**.

Place support pads and bedding layers underneath

DANGER
Improper application of the support pads and base plates!
Toppling of machine.

▶ Use support pads attached on undercarriage.

▶ Place stable materials with sufficient dimensions below the support pads.

▶ Place the same materials beneath support pads.

▶ Make sure that bedding layers do not protrude into the transport vehicle's track.

LWN/LR.x/V03.01//Auslieferung/2015-06-03/en

copyright by
LIEBHERR

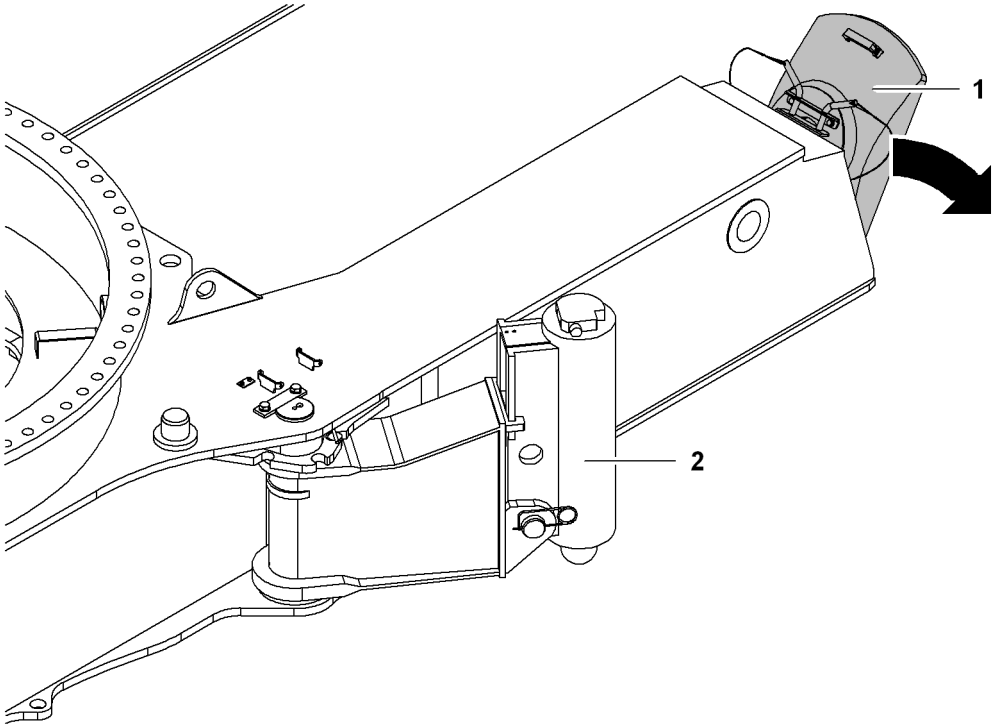

Fig. 2882: Place support pads underneath

1	Support pad	**2**	Jack

▶ Take support pad **1** out of bracket.

▶ Place support pad **1** below jack **2** flat on the ground or on bedding layers.

▶ Repeat procedure with all jacks **2**.

Determining the support height

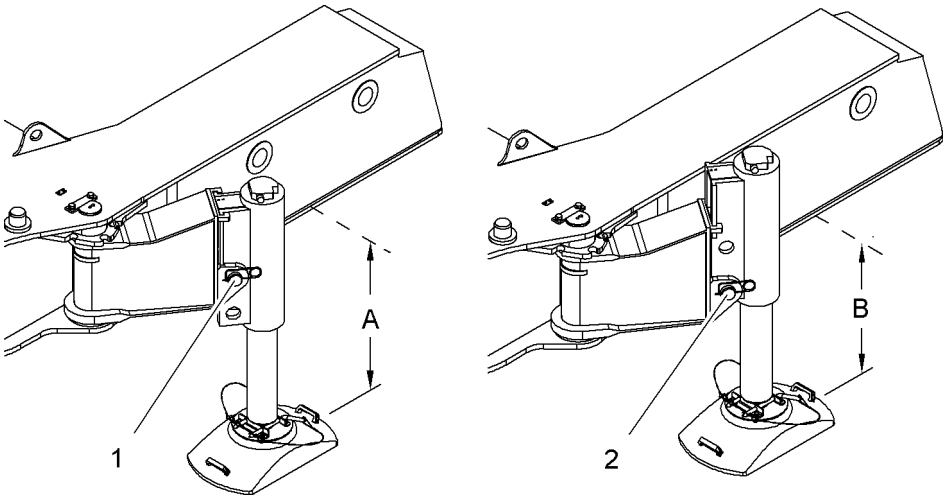

Fig. 2883: Determining the support height

1	Jack in top pin connection position	**A**	Support height 970 mm (3‘ 2“ ft-in)
2	Jack in bottom pin connection position	**B**	Support height 720 mm (2‘ 4“ ft-in)

Jacks can be pinned to the slewing brackets in two positions.

LWN/LR.x/V03.01//Auslieferung/2015-06-03/en

copyright by
LIEBHERR

The support height required to unload the machine depends on:
– Height of transport vehicle
– Soil conditions at the erection site

Example:
– Distance ground to transport vehicle loading surface: 1000 mm (3‘ 3“ ft-in)
– Safety distance between undercarriage of basic machine and low loader loading surface: 100 mm (3.94“ in)
– Support height of jacks: 970 mm (3‘ 2“ ft-in)
– Soil conditions: Level asphalt ground with sufficient load-bearing capacity

Result: Place support pads with a thickness of 100 mm (3.94“ in) underneath.

Adjusting the support height of jacks

If the calculation of the support height requires a change of the jack position, perform the following steps.

DANGER
Different support heights!
Toppling of machine.

▶ Pin all jacks to same pin connection points on slewing brackets.

▶ Plug in the cable remote control on the undercarriage.

DANGER
Inadmissible lifting of machine!
Toppling of machine.

▶ Extend jacks until pin vents.

▶ Do not lift machine.

LWN/LR.x/V03.01//Auslieferung/2015-06-03/en

copyright by
LIEBHERR

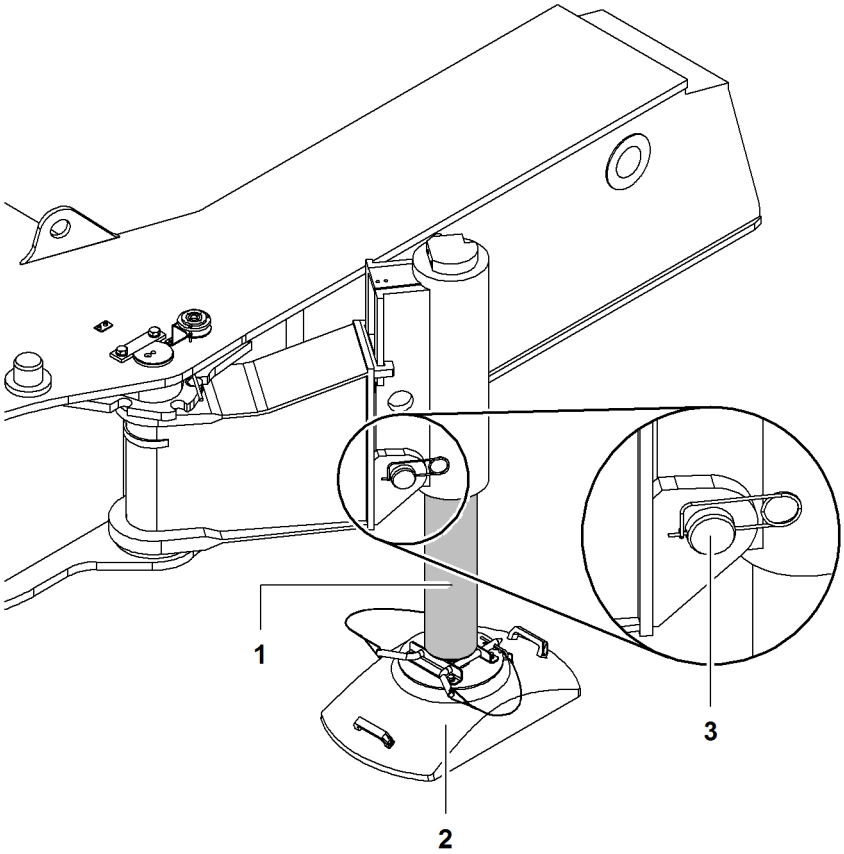

Fig. 2884: Extend jacks and remove pins

1	Jack	**3**	Pin
2	Support pad		

The jacks **1** are operated with the toggle switches of the cable remote control (For more information see: 3.24.2 Cable remote control on undercarriage*, page 784) .

- ▶ Move the corresponding toggle switch on cable remote control forward.
  - ▷ Jack **1** extends.
- ▶ Alignsupport pads **2** if necessary.
- ▶ Extend jack **1** until the pin **3** can be turned by hand.
- ▶ Remove pin **3**.

CAUTION
Movable parts!
Risk of crushing limbs.

- ▶ Keep all limbs well clear of moving parts.
- ▶ Check alignment of pin connection points visually.

LWN/LR.x/V03.01//Auslieferung/2015-06-03/en

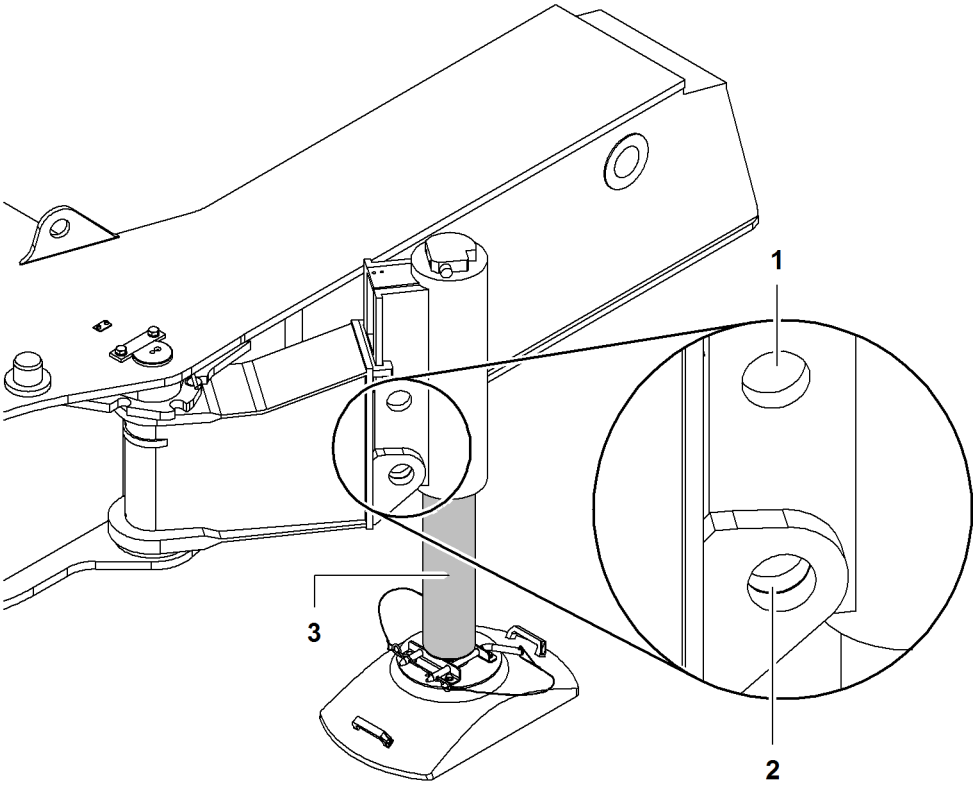

Fig. 2885: Adjusting pin connection point

1 Top pin connection point
2 Bottom pin connection point
3 Jack

▶ Move the corresponding toggle switch on cable remote control backward.
▷ Top part of the jack **3** moves.

LWN/LR.x/V03.01//Auslieferung/2015-06-03/en

copyright by
LIEBHERR

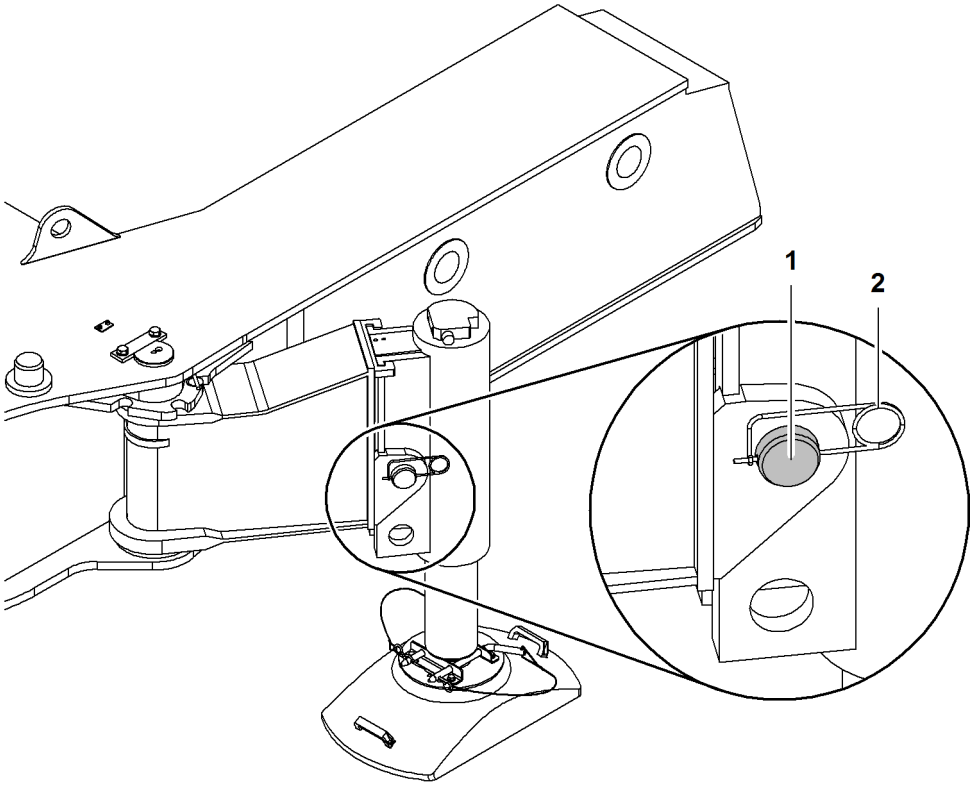

Fig. 2886: Inserting pin

1 Pin **2** Locking spring

When the pin connection point of the slewing bracket aligns with the upper pin connection point of the jack:

- ▶ Insert pin **1**.
- ▶ Secure pin **1** with locking spring **2**.
- ▶ Repeat procedure with all jacks.

Extend jacks

DANGER
Uneven extending of jacks!
Toppling of machine.

- ▶ Ensure that the air bubble in the spirit level does not move across the outer circle.
- ▶ Ensure that one or more assistants monitor the jack-up procedure.

The jacks are operated with the toggle switches of the cable remote control (For more information see: 3.24.2 Cable remote control on undercarriage*, page 784) .

Several toggle switches can be actuated at the same time.

The bubble in the spirit level must be absolutely stationary in the innermost circle without additional bubbles.

LWN/LR.x/V03.01//Auslieferung/2015-06-03/en

copyright by
LIEBHERR

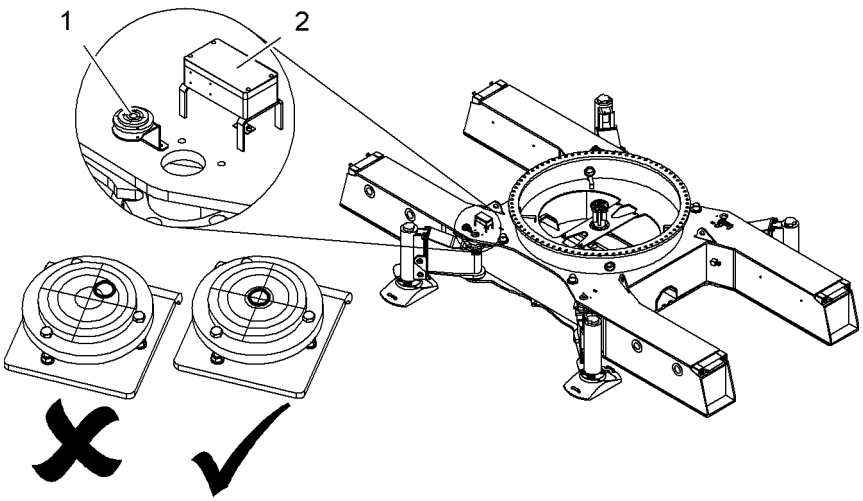

Fig. 2887: Spirit level on undercarriage

1	Spirit level	**2**	Connection plug of cable remote control

Note

Liebherr recommends:
▶ Always extend two jacks at the same time.

▶ Move the corresponding toggle switches on cable remote control forward.
  ▷ Jacks extend.
  ▷ Machine lifts.

▶ Move the corresponding toggle switches on cable remote control backward.
  ▷ Jacks retract.
  ▷ Machine lowers.

▶ Level machine carefully and precisely.

Driving the transport vehicle out from underneath the machine

Make sure the following prerequisites are met:
- ❑ There is a clearance of at least 100 mm (3.94“ in) between the transport vehicle and the machine.
- ❑ The chocks between the transport vehicle and the machine were removed.
- ❑ There are no obstacles on the ground (e.g. rocks) that might cause the transport vehicle to deviate from its track.
- ❑ The transport vehicle can drive straight out from underneath the machine.
- ❑ The steering axles on the transport vehicle are straight.
- ❑ All jacks are extended all the way to the ground.

DANGER
Collision of transport vehicle with jacks!
Toppling of machine.

▶ Make sure that one or more assistants direct the transport vehicle.

▶ Drive the transport vehicle out from underneath the machine.

LWN/LR.x/V03.01//Auslieferung/2015-06-03/en

copyright by
LIEBHERR

7.4.17 Removing the uppercarriage lock

The uppercarriage is permanently connected to the undercarriage for transportation.

This connection prevents the uppercarriage from turning during transport.

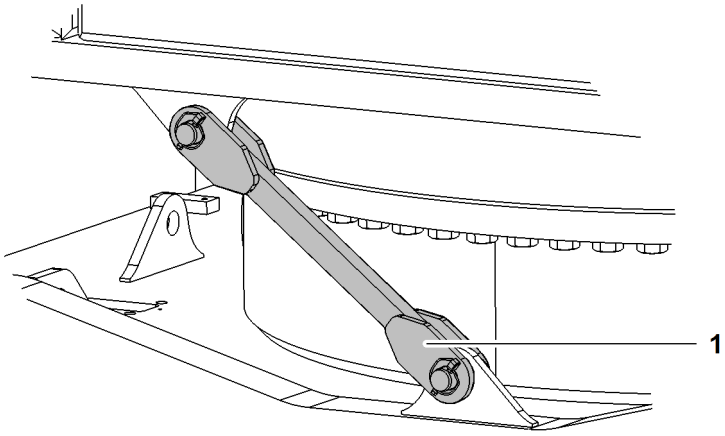

Fig. 2888: Removing the uppercarriage lock

1 Uppercarriage lock

▶ Remove linchpin and pin on uppercarriage.

▶ Place uppercarriage lock **1** on undercarriage.

▶ Reinsert pins and secure with linchpin.

7.4.18 Attaching the crawler side frame

The crawler side frames can be attached in any order.

Ensure that the following conditions are fulfilled:

- ❑ Approved sling gear is available (For more information see: 6.9 Rigging equipment and/or sling gear, page 1100) .
- ❑ Unloading the crawler side frames from the transport vehicle on the correct side is possible.
- ❑ It is possible to approach the machine with the transport vehicle bearing the crawler side frames.
- ❑ Jacks are moved so far apart that there is sufficient ground clearance to attach the crawler side frames, and it is possible to unload from the transport vehicle.
- ❑ Machine is level.
- ❑ Cylinder adjustment functions on.

LWN/LR.x/V03.01//Auslieferung/2015-06-03/en

copyright by
LIEBHERR

Attaching crawler side frame for undercarriage with fixed track width

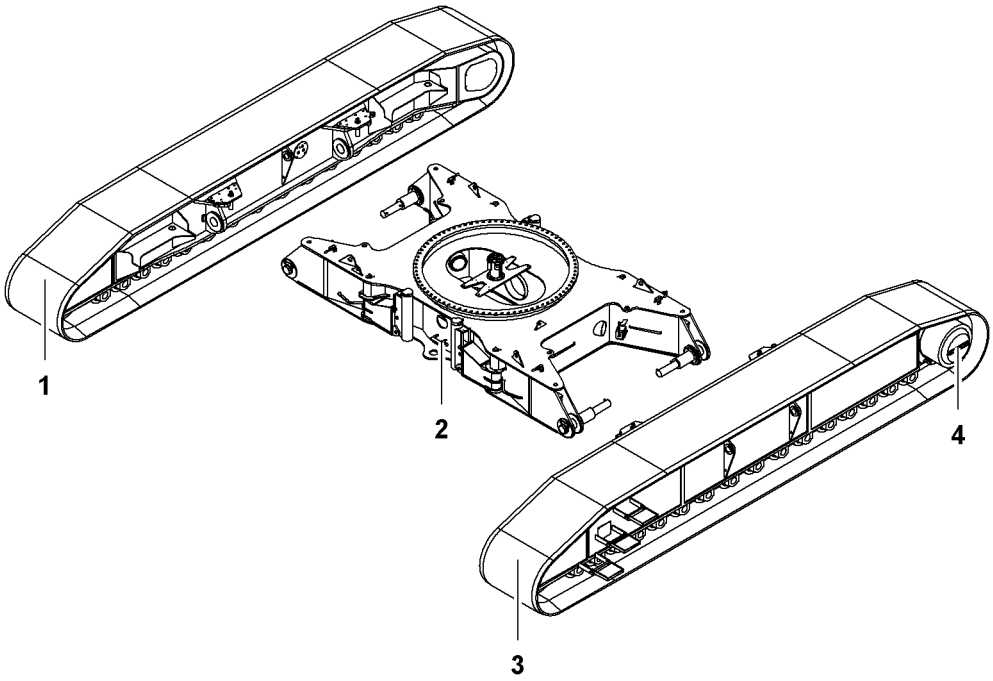

Fig. 2889: Attaching crawler side frame for undercarriage with fixed track width

1	Right crawler side frame	**3**	Left crawler side frame
2	Control lever *jack*	**4**	Crawler drive (tumbler) (2x)

Note

Liebherr recommends:

▶ to position and align the undercarriage and/or the crawler side frames, use the jack *control levers* **2**.

Preparing the undercarriage

All pin connection cylinders on the undercarriage must be retracted before the crawler side frames are attached.

LWN/LR.x/V03.01//Auslieferung/2015-06-03/en

copyright by
LIEBHERR

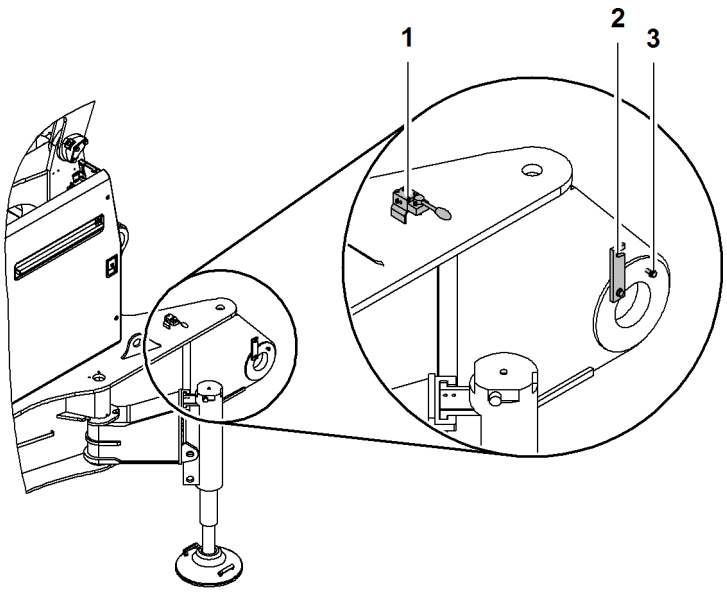

Fig. 2890: Preparing the undercarriage

1 Control lever *pin connection cylinder*
2 Locking element
3 Screw

▶ Loosen the screw **3** on the securing element **2**.

▶ Fold up the securing element **2**.

▶ Actuate pin connection cylinder *control lever* **1**.
▷ Pin connection cylinder retracts.

▶ Repeat procedure on all pin connection points.

Rigging and mounting the first crawler side frame

Rigging the transport brackets

When loading and assembling the crawler side frame, the transport brackets prevent sagging of the crawler chains.

LWN/LR.x/V03.01//Auslieferung/2015-06-03/en

copyright by
LIEBHERR

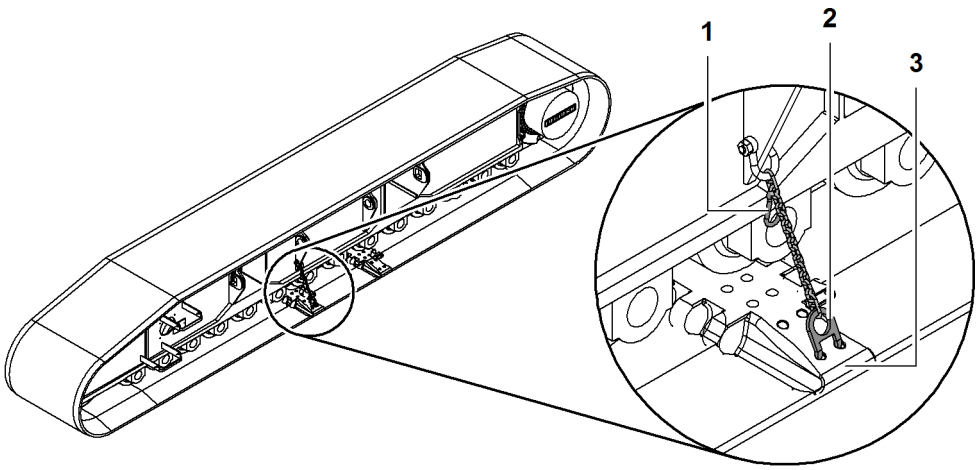

Fig. 2891: Rigging the transport brackets

1 Carabiner
2 Hook
3 Base plate

▶ Detach hook **2** on carabiner **1**.

▶ Attach hook **2** at the base plate **3**.

▶ Repeat procedure on opposite side of crawler side frame.

Rigging the first crawler side frame

DANGER
Maximum radius exceeded!
Machine toppling over.

▶ Do not exceed maximum radius.

▶ Pay attention to the mechanical boom angle indicator on A-frame 1.

The uppercarriage can be swung by 360° within the maximum radius.

LWN/LR.x/V03.01//Auslieferung/2015-06-03/en

copyright by
LIEBHERR

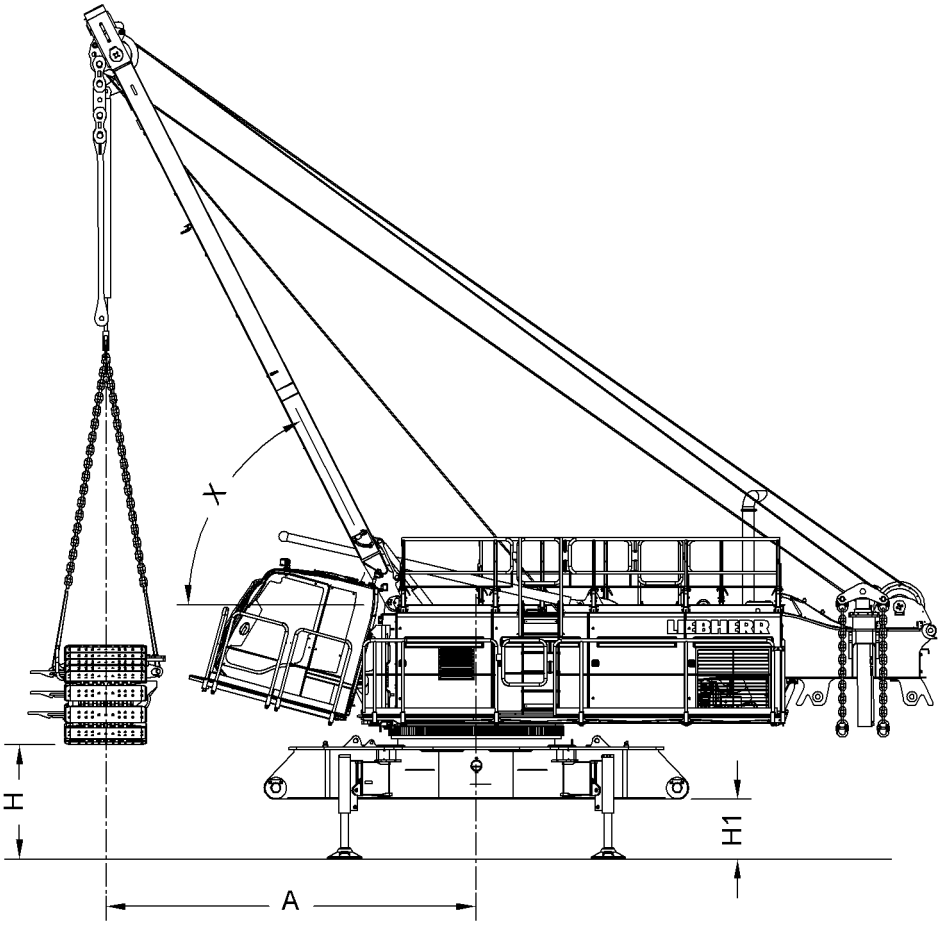

Fig. 2892: Limit values - rigging the first crawler side frame

Name		Value
A	Maximum radius	4500 mm 14‘ 9“ ft-in
H	Maximum lifting height	1196 mm 3‘ 11“ ft-in
H1	Maximum support height	975 mm 3‘ 2“ ft-in
X	Minimum angle for A-frame1	70°

Tab. 460: Limit values - rigging the first crawler side frame

▶ Move the transport vehicle carrying the crawler side frame as close to the machine as possible.

NOTICE
Horizontal cab!
Damage to cab.

▶ The cab must be tilted upwards before the crawler side frame is attached.

LWN/LR.x/V03.01//Auslieferung/2015-06-03/en

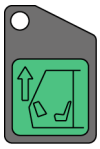

▶ Press the *Tilt cabin up* button on control panel *X11*.
▷ The cab tilts upwards.

CAUTION
Moving folding brackets!
Risk of crushing limbs.

▶ Keep all limbs well clear of moving folding brackets.

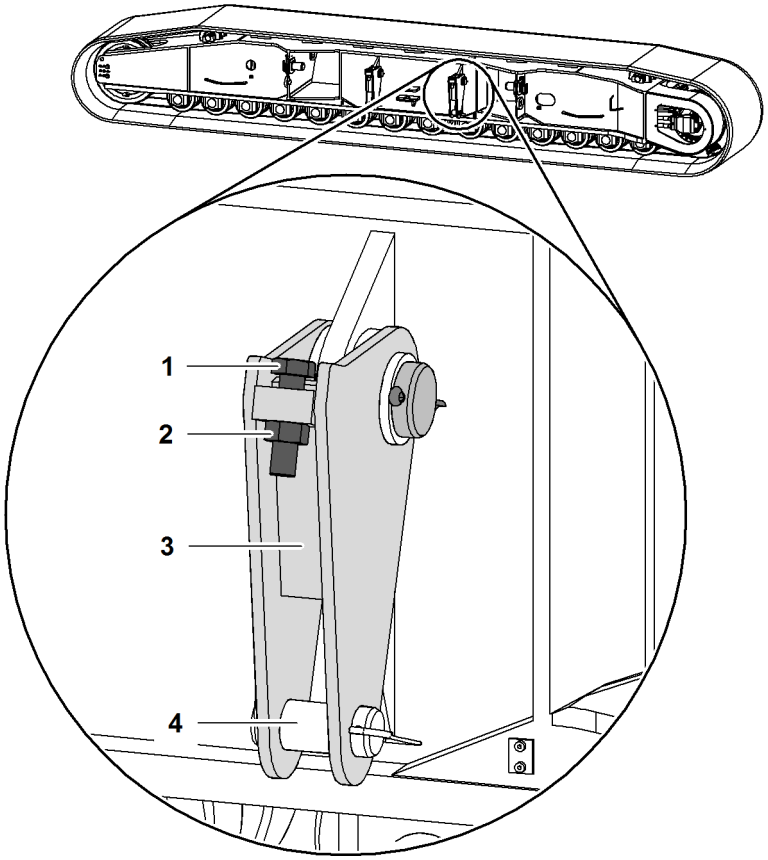

Fig. 2894: Aligning the folding brackets on the crawler side frame (illustration of principle)

1	Screw	**3**	Folding bracket
2	Nut	**4**	Pin

Adjust angle of the folding bracket **1** by turning the screw **3**.

Once all folding brackets **3** on the crawler side frame are aligned, the crawler side frame hangs level.

▶ Undo nut **2**.

▶ Turn screw **1** to required position.

▶ Tighten nut **2**.

▶ Remove locking spring and pin **4**.

▶ Manually lift folding bracket **3**.

The 4th round sling of the sling gear is not required for assembly.

▶ Rig sling gear to folding bracket **3**.

LWN/LR.x/V03.01//Auslieferung/2015-06-03/en

copyright by
LIEBHERR

- ▶ Insert pin **4**.
- ▶ Secure pin **4** with locking spring.
- ▶ Repeat procedure with all folding brackets **3**.
- ▶ Slightly lift crawler side frame.
  ▷ Crawler side frame is level with undercarriage:

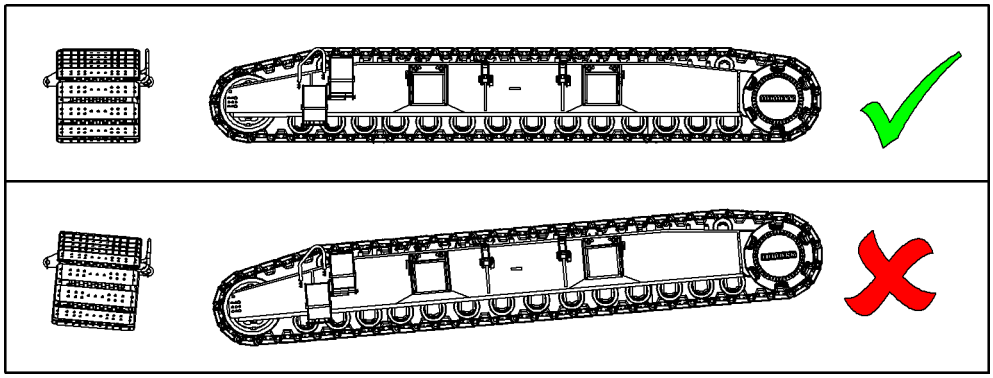

Fig. 2895: Crawler side frame is level with undercarriage (illustration of principle)

If crawler side frame is not level with undercarriage:
- ▶ Set down crawler side frame.
- ▶ Realign folding brackets **3** on crawler side frame.
- ▶ Repeat procedure until crawler side frame is level with undercarriage.

LWN/LR.x/V03.01//Auslieferung/2015-06-03/en

copyright by
LIEBHERR

Installing the first crawler side frame

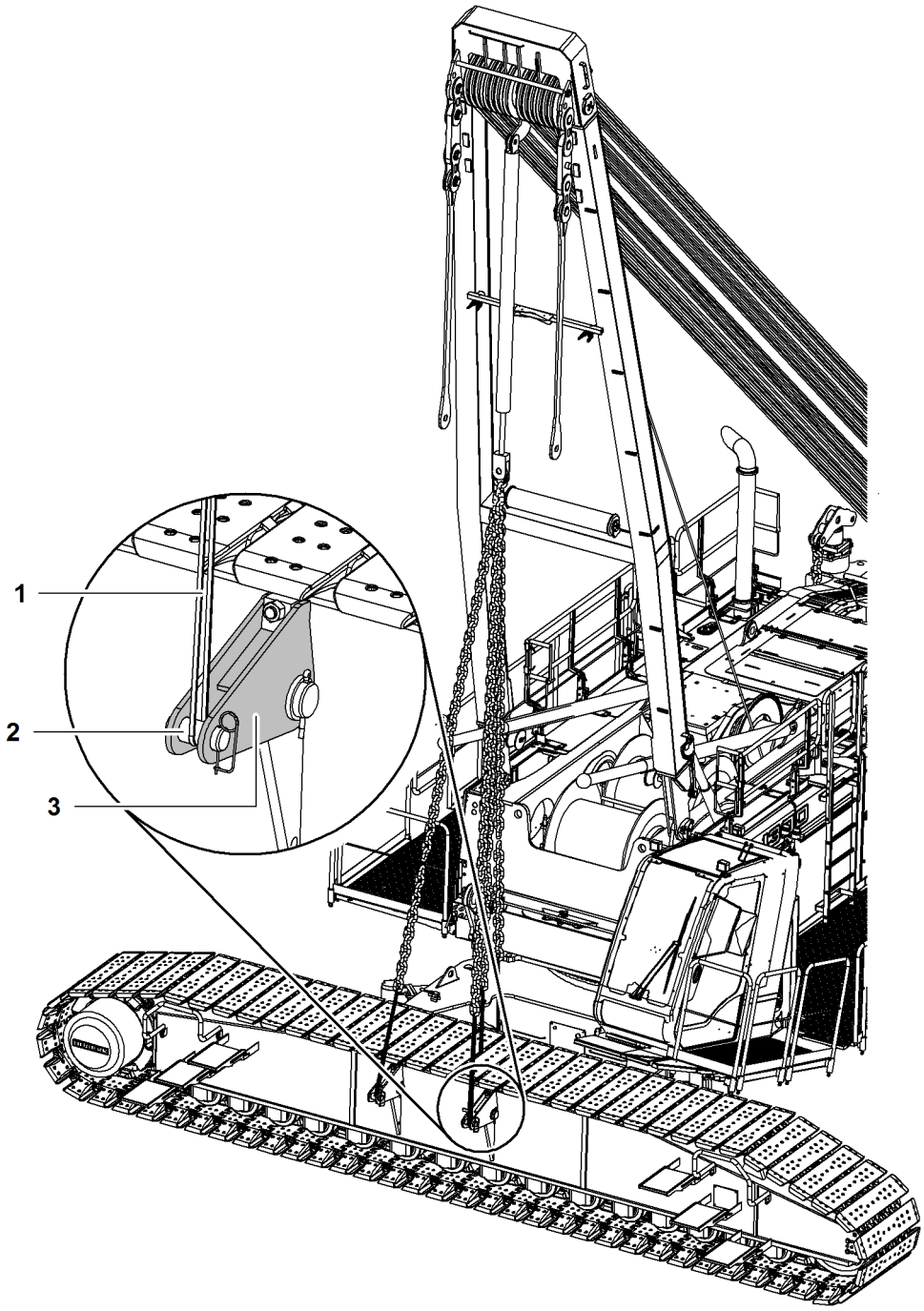

Fig. 2896: Installing the first crawler side frame

1 Sling gear
2 Pin
3 Folding bracket

WARNING
Machine swings with a suspended load!
Crush, fatal injury.

- ▶ Make sure that no-one is standing in the danger area.
- ▶ Leave the danger area.

LWN/LR.x/V03.01//Auslieferung/2015-06-03/en

copyright by
LIEBHERR

- ▶ Lifting the crawler side frames from the transport vehicle.
- ▶ Drive the transport vehicle away.

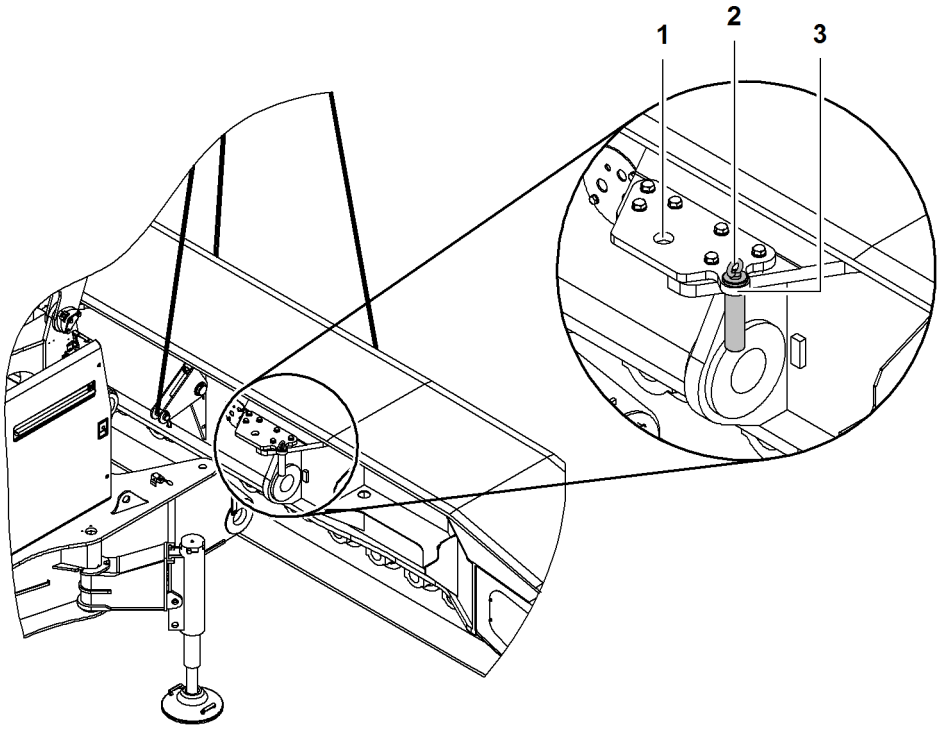

Fig. 2897: Inserting the pin in the lateral mount

1 Pin connection position
2 Pin
3 Lateral mount

- ▶ Remove pin **2** from pin connection position **1**.
- ▶ Insert pin **2** in lateral mount **3**.
- ▶ With the assistance of the signalman, align the crawler side frame exactly with the pin connection points on the undercarriage.

NOTICE
Incorrect mounting of crawler side frames!
Damage to machine.

- ▶ Offer the crawler side frame up slowly, step-by-step and evenly.

- ▶ Align the crawler side frames symmetrically so they can be pinned from both sides.

LWN/LR.x/V03.01//Auslieferung/2015-06-03/en

copyright by
LIEBHERR

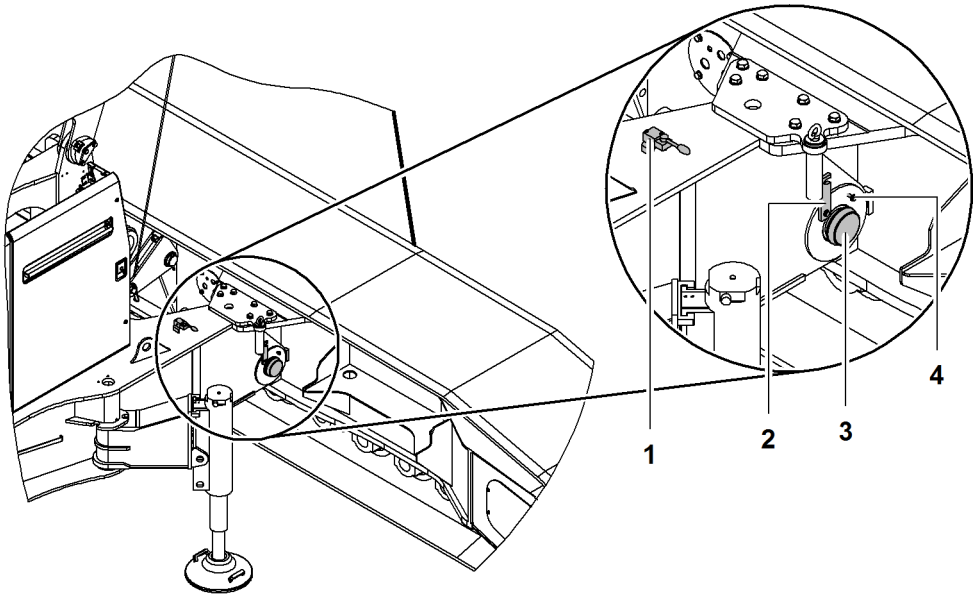

Fig. 2898: Pinning the first crawler side frame

1	Control lever *pin connection cylinder*	**3**	Pin connection cylinder
2	Locking element	**4**	Screw

▶ Actuate pin connection cylinder *control lever* **1**.
  ▷ Pin connection cylinder **3** extends.

▶ Fold locking element **2** into pin connection cylinder **3** notch.

▶ Secure locking element **2**: Tighten the screw **4**.

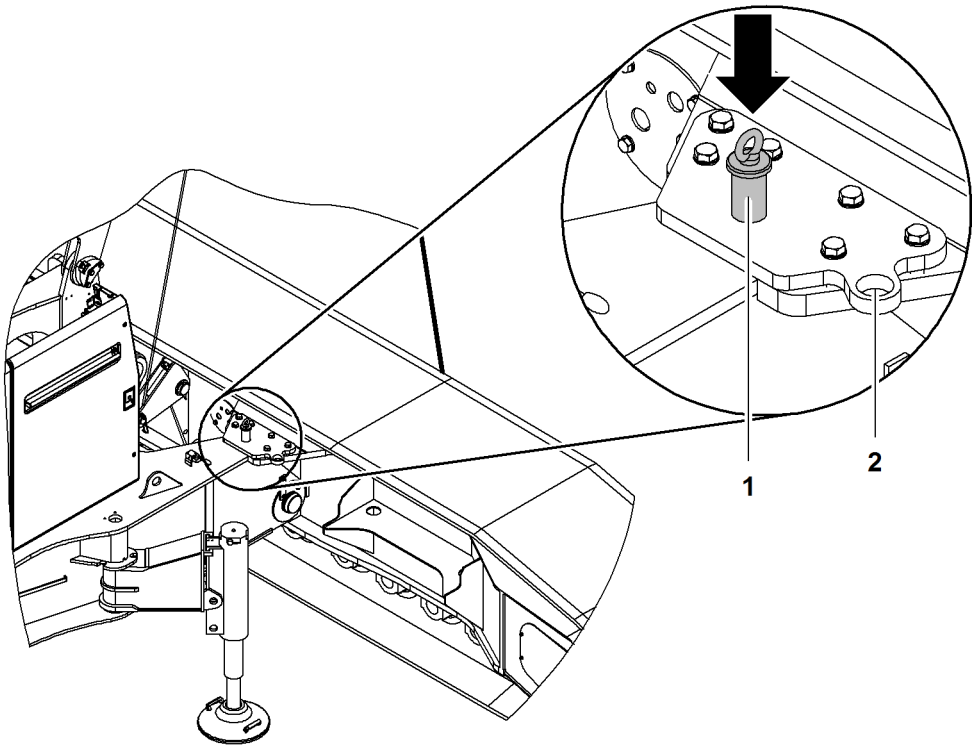

Fig. 2899: Inserting the pin into the pin connection position

1	Pin	**2**	Lateral mount

LWN/LR.x/V03.01//Auslieferung/2015-06-03/en

copyright by
LIEBHERR

- ▶ Remove pin **1** from lateral mount **2**.
- ▶ Insert pin **1** into the pin connection position.
- ▶ Repeat the pin insertion process on the opposite side.
- ▶ Lower assembly cylinder until sling gear slackens off.
- ▶ Detach sling gear.

Removing the transport safety

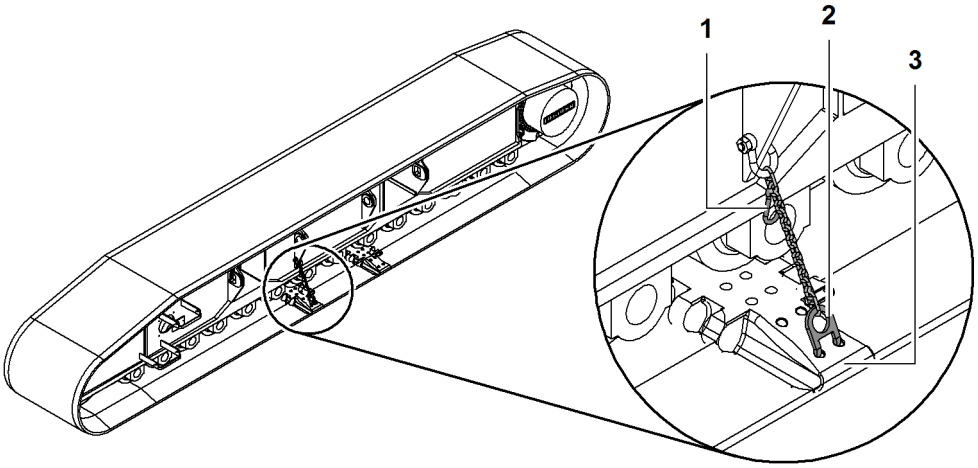

Fig. 2900: Removing the transport brackets

1	Carabiner	**3**	Base plate
2	Hook		

- ▶ Detach hook **2** at base plate **3**.
- ▶ Attach hook **2** to the carabiner **1**.
- ▶ Repeat procedure on opposite side of crawler side frame.

Rigging and mounting the second crawler side frame

DANGER
Inadmissible swing angle of uppercarriage with attached crawler side frame!
Machine toppling over.

- ▶ When viewed from the mounting position of the second crawler side frame, the uppercarriage may only be swung 90° to the left or right.

- ▶ Rig, adjust and install the second crawler side frame the exact same way as the first.

DANGER
Incorrect lowering of machine!
Machine toppling over.

- ▶ Carefully lower the machine, keeping it level at all times.

- ▶ Lower the machine.
- ▶ Retract jacks.

LWN/LR.x/V03.01//Auslieferung/2015-06-03/en

Fitting the second crawler side frame where space is limited

If it is necessary to swing 180° from the mounting position in order to attach the second crawler side frame, then carry out the following process steps.

Ensure that the following conditions are fulfilled:
- ❑ Two support plates with a height of at least 1000 mm (3‘ 3“ ft-in) x 1000 mm (3‘ 3“ ft-in) and 150 mm (5.91“ in) are available.

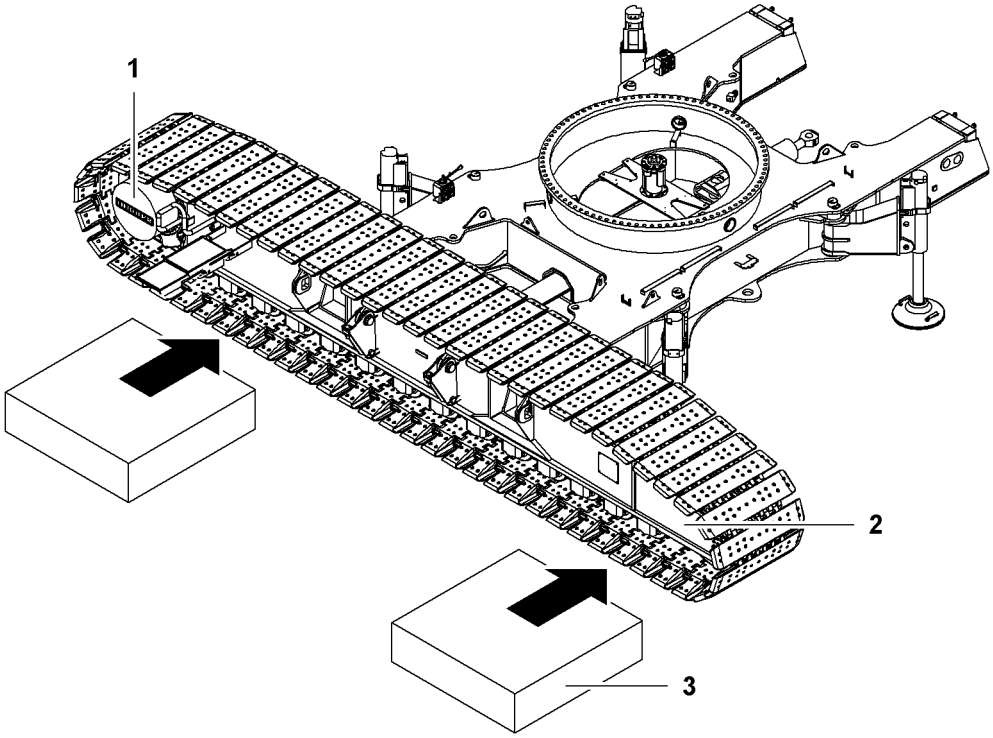

Fig. 2901: Mounting the second crawler side frame where space is limited (illustration of principle)

1 Crawler drive (tumbler)
2 Idler wheel
3 Support plate (2x)

▶ Place support plate **3** beneath crawler drive (tumbler) **1**.

▶ Place support plate **3** beneath idler wheel **2**.

▶ Lower crawler side frame onto support plates **3**.

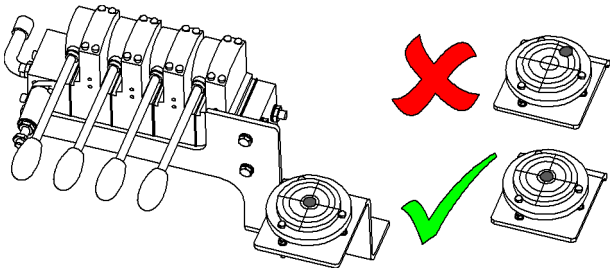

Fig. 2902: Jack control lever and spirit level on undercarriage

▶ Level the undercarriage.

It is not necessary to take account of a critical angle for the radius of A-frame1.

Uppercarriage can be swung as required.

LWN/LR.x/V03.01//Auslieferung/2015-06-03/en

copyright by LIEBHERR

- ▶ Rig, adjust and install the second crawler side frame the exact same way as the first.
- ▶ Raise the machine slightly.
- ▶ Remove base plates.

DANGER
Incorrect lowering of machine!
Machine toppling over.

- ▶ Carefully lower the machine, keeping it level at all times.

- ▶ Lower the machine.
- ▶ Retract jacks.

Connecting the hydraulic lines on the crawlers

Ensure that the following conditions are fulfilled:
- ❑ Hand lever for multi-coupling is available.
- ❑ Diesel engine is switched off.

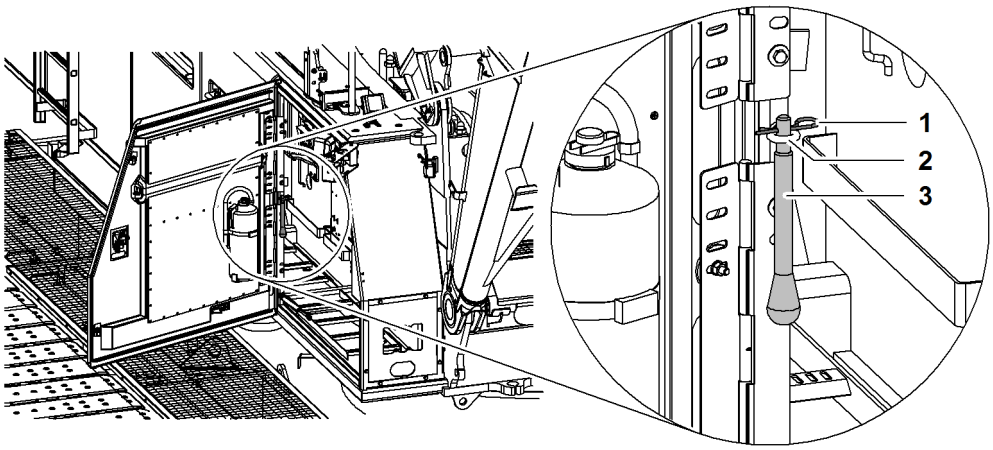

Fig. 2903: Transport bracket for hand lever of multi-coupling

1 Locking spring
2 Ring
3 Hand lever

- ▶ Lift hand lever **3** and remove locking spring **1**.
- ▶ Remove hand lever **3** downwards from ring **2**.

LWN/LR.x/V03.01//Auslieferung/2015-06-03/en

copyright by
LIEBHERR

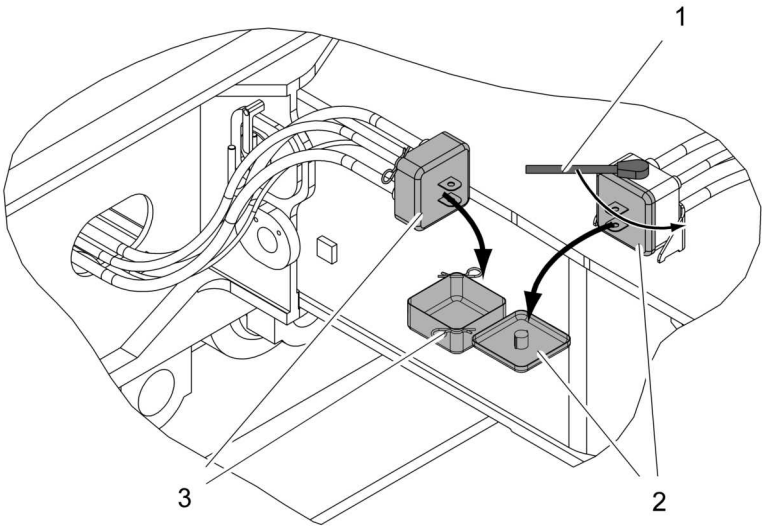

Fig. 2904: Removing the cover of the multi-couplings

1 Hand lever
2 Cover
3 Cover

▶ Fit the hand lever **1** on the multi-coupling.

▶ Turn hand lever **1** in the direction indicated by the arrow.
▷ Cover **2** is loose.

▶ Take off the cover **2** and stow it away.

▶ Remove locking springs on cover **3**.

▶ Take off the cover **3** and stow it away.

NOTICE
Dirty multi-couplings!
Damage to the hydraulic system.

▶ Clean the multi-couplings before fitting them together.

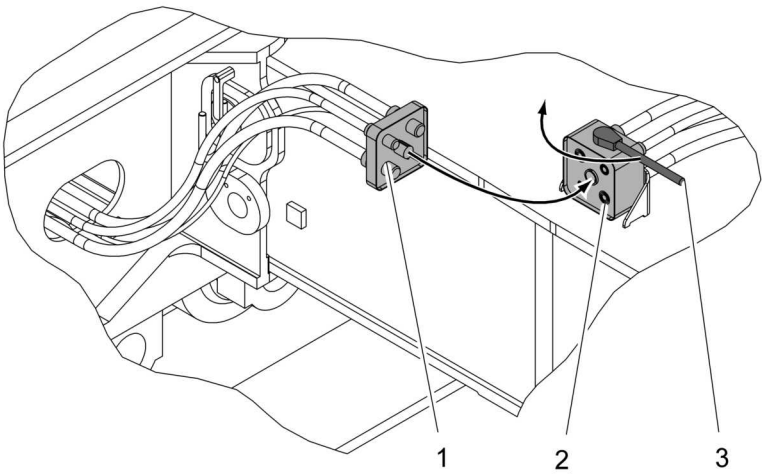

Fig. 2905: Connecting the multi-couplings

1 Multi-coupling (undercarriage)
2 Multi-coupling (crawler side frame)
3 Hand lever

LWN/LR.x/V03.01//Auslieferung/2015-06-03/en

copyright by
LIEBHERR

▶ Connect the multi-couplings **1 + 2**.

▶ Move hand lever in direction of the arrow until latch engages.
▷ Multi-couplings are visibly and audibly pulled together.
▷ The multi-coupling indicating pins stick out:

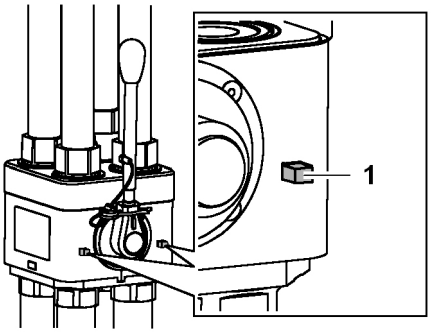

Fig. 2906: Locked multi-coupling

1 Indicating pin (2x)

▶ Disassemble the hand lever of the multi-coupling and remove.

▶ Repeat the procedure for the second crawler side frame.

Unfolding steps from transport position

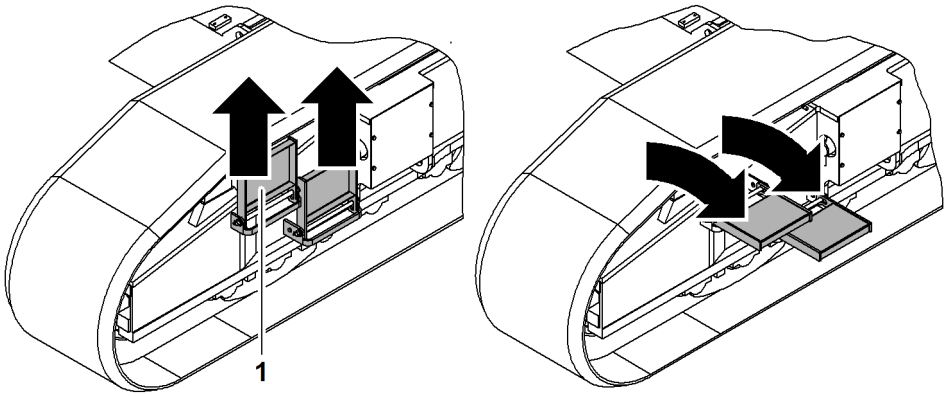

Fig. 2907: Unfolding steps from transport position

1 Steps (2x)

▶ Lift steps **1** completely.

▶ Fold down steps **1**.

Placing jack in transport position

In order to attach carbody counterweight to machine, jacks have to be pinned in transport position.

Make sure the following prerequisites are met:
❑ Installation of both crawler side frames is completed.

LWN/LR.x/V03.01//Auslieferung/2015-06-03/en

copyright by
LIEBHERR

Adjusting the support height of jacks

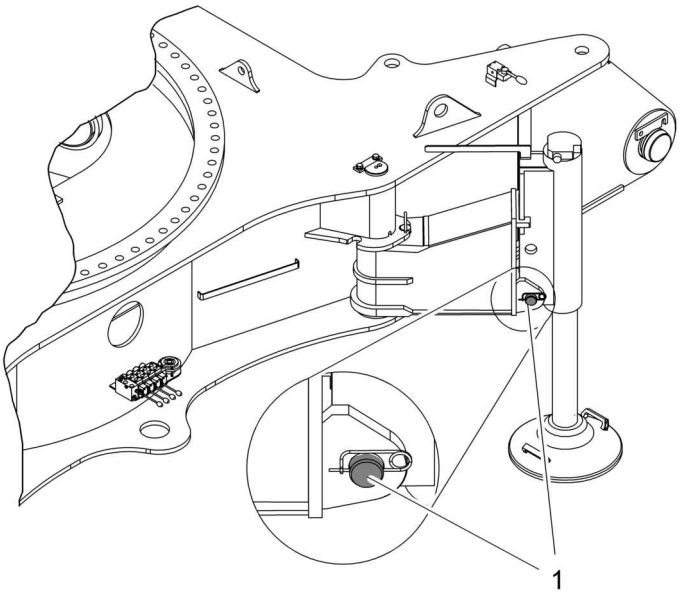

Fig. 2908: Jack in bottom pin connection position

1 Bottom pin connection position

CAUTION
Movable parts!
Risk of crushing limbs.

▶ Keep all limbs well clear of moving parts.

▶ Pin jack in bottom pin connection position **1**.

▶ Repeat procedure with all jacks.

LWN/LR.x/V03.01//Auslieferung/2015-06-03/en

copyright by
LIEBHERR

Placing the slewing brackets in transport position

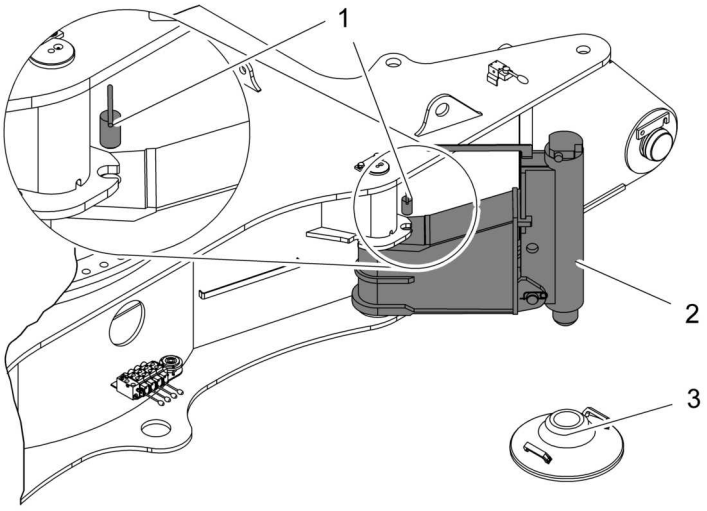

Fig. 2909: Slewing bracket in support position

1 Pin
2 Slewing bracket
3 Support pads

▶ Remove pin **1**.

▶ Slewing the slewing brackets **2** into transport position.

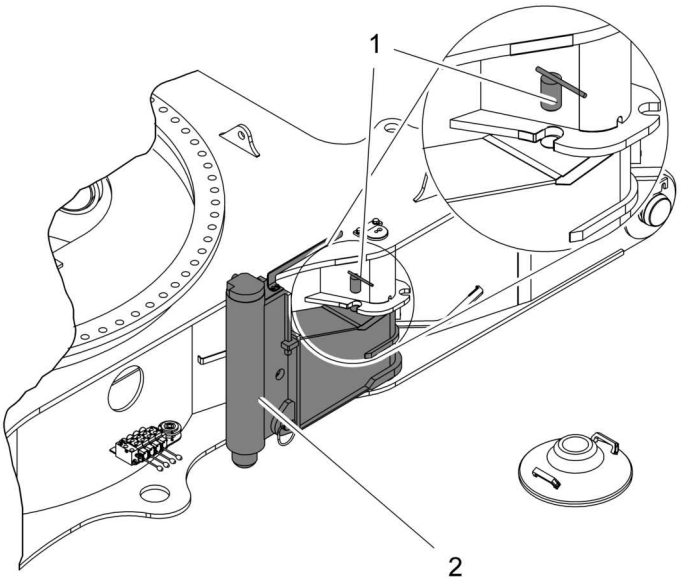

Fig. 2910: Slewing brackets in transport position

1 Pin
2 Slewing bracket

▶ Insert pin **1**.

▶ Repeat procedure with all slewing brackets **2**.

LWN/LR.x/V03.01//Auslieferung/2015-06-03/en

Removing support pads and bedding layers

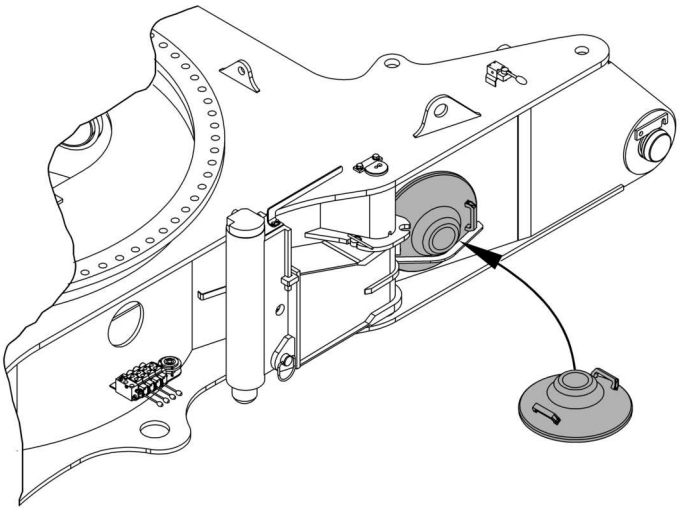

Fig. 2911: Removing support pads

▶ Insert support pads into brackets.

Attaching crawler side frame for undercarriage* with adjustable track width

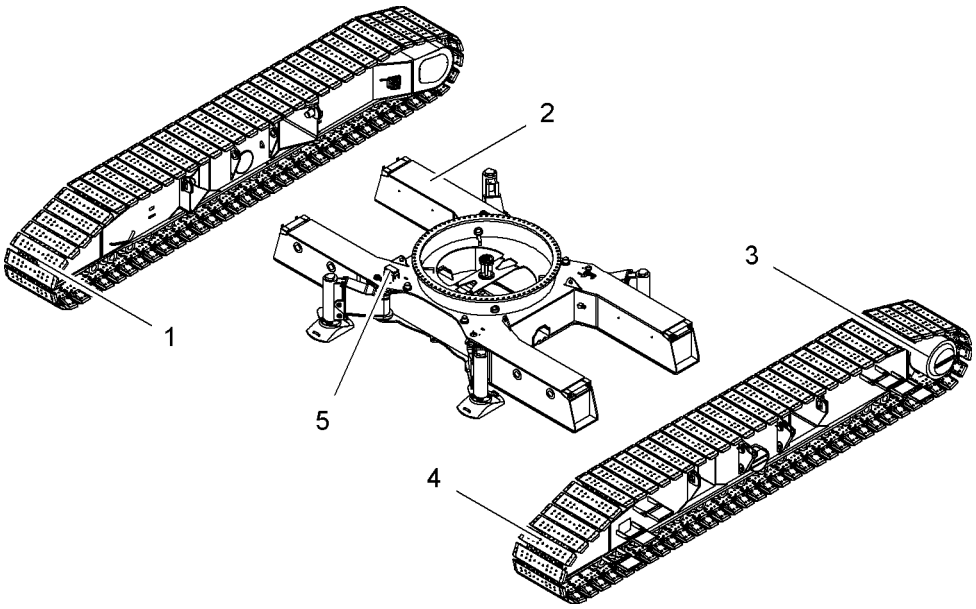

Fig. 2912: Attaching crawler side frame for undercarriage with adjustable track width*

1 Right crawler side frame
2 Undercarriage
3 Crawler drive (tumbler) (2x)
4 Left crawler side frame
5 Connection plug of cable remote control

LWN/LR.x/V03.01//Auslieferung/2015-06-03/en

copyright by
LIEBHERR

Note

Liebherr recommends:

▶ For orientation and alignment of the undercarriage and/or crawler side frames, use the connection plug **5** of the cable remote control.

Loosening strut mountings

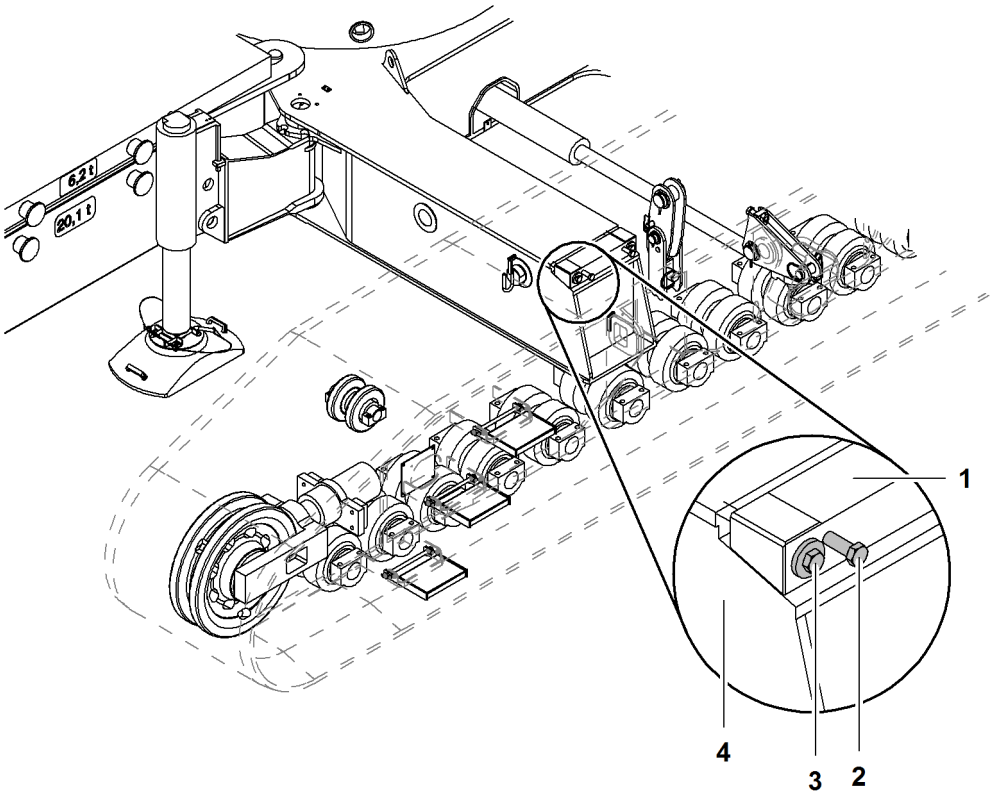

Fig. 2913: Loosening strut mountings

1	Wedge	**3**	Locking screw (2x)
2	Screw (2x)	**4**	Strut

The two outer locking screws **3** must be turned almost completely out of the struts **4** so that the wedge **1** is located as close as possible to the end of the strut.

▶ Loosen screws **2** of the strut mounting.

▶ Loosen locking screws **3** of strut mounting and twist out almost all the way.

▶ Turn in screws **2** of strut mounting.
▷ Wedge **1** loosens.

▶ Clean strut **4** and evenly grease the slide faces.

▶ Repeat procedure on all strut mountings.

LWN/LR.x/V03.01//Auslieferung/2015-06-03/en

copyright by
LIEBHERR

Preparing the crawler side frame

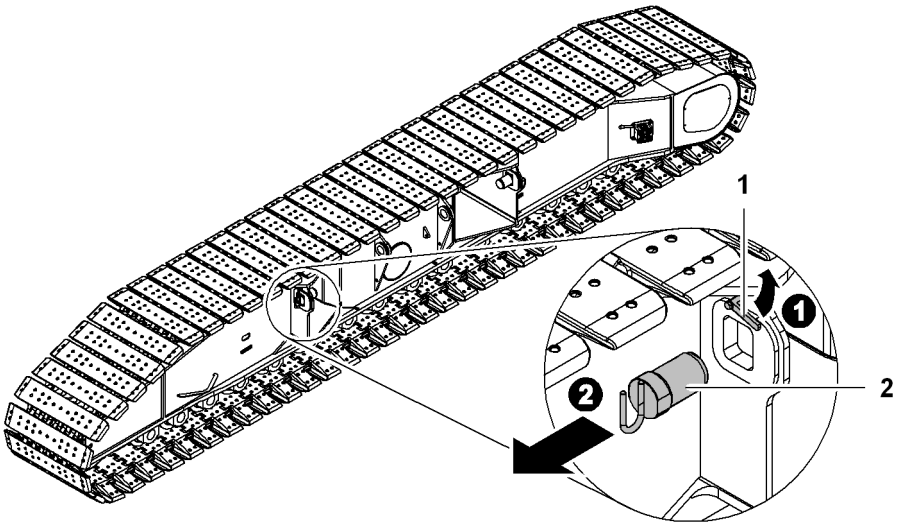

Fig. 2914: Preparing the crawler side frame

1 Safety lever **2** Pin

▶ Undo safety lever **1** screw.

▶ Fold up the safety lever **1**.

▶ Remove pin **2**.

▶ Repeat procedure on all crawler side frame pin connection points.

Rigging and mounting the first crawler side frame

Suspending the transport brackets

When loading and assembling the crawler side frame, the transport brackets prevent sagging of the crawler chains.

NOTICE
Improper installation of transport brackets!
Damage to hydraulic system.
Hydraulic oil leak.

▶ Ensure that the chains of the transport brackets do not damage any hydraulic oil pipes.

LWN/LR.x/V03.01//Auslieferung/2015-06-03/en

copyright by
LIEBHERR

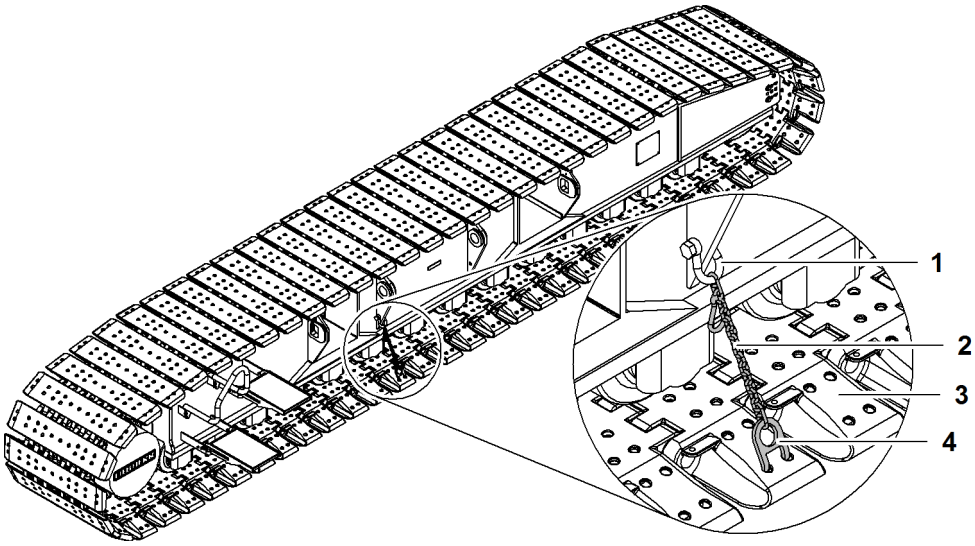

Fig. 2915: Suspending the transport brackets

1	Shackle	**3**	Base plate
2	Chain	**4**	Hook

▶ Attach hook **4** at the base plate **3**.

▶ Attach shackle **1** with chain **2** on a suitable spot on the crawler side frame.

▶ Repeat procedure on opposite side of crawler side frame.

Rigging the first crawler side frame

DANGER
Maximum radius exceeded!
Toppling of machine.

▶ Do not exceed maximum radius.

▶ Pay attention to the mechanical boom angle indicator on A-frame1.

The uppercarriage can be swung by 360° within the maximum radius.

LWN/LR.x/V03.01//Auslieferung/2015-06-03/en

copyright by
LIEBHERR

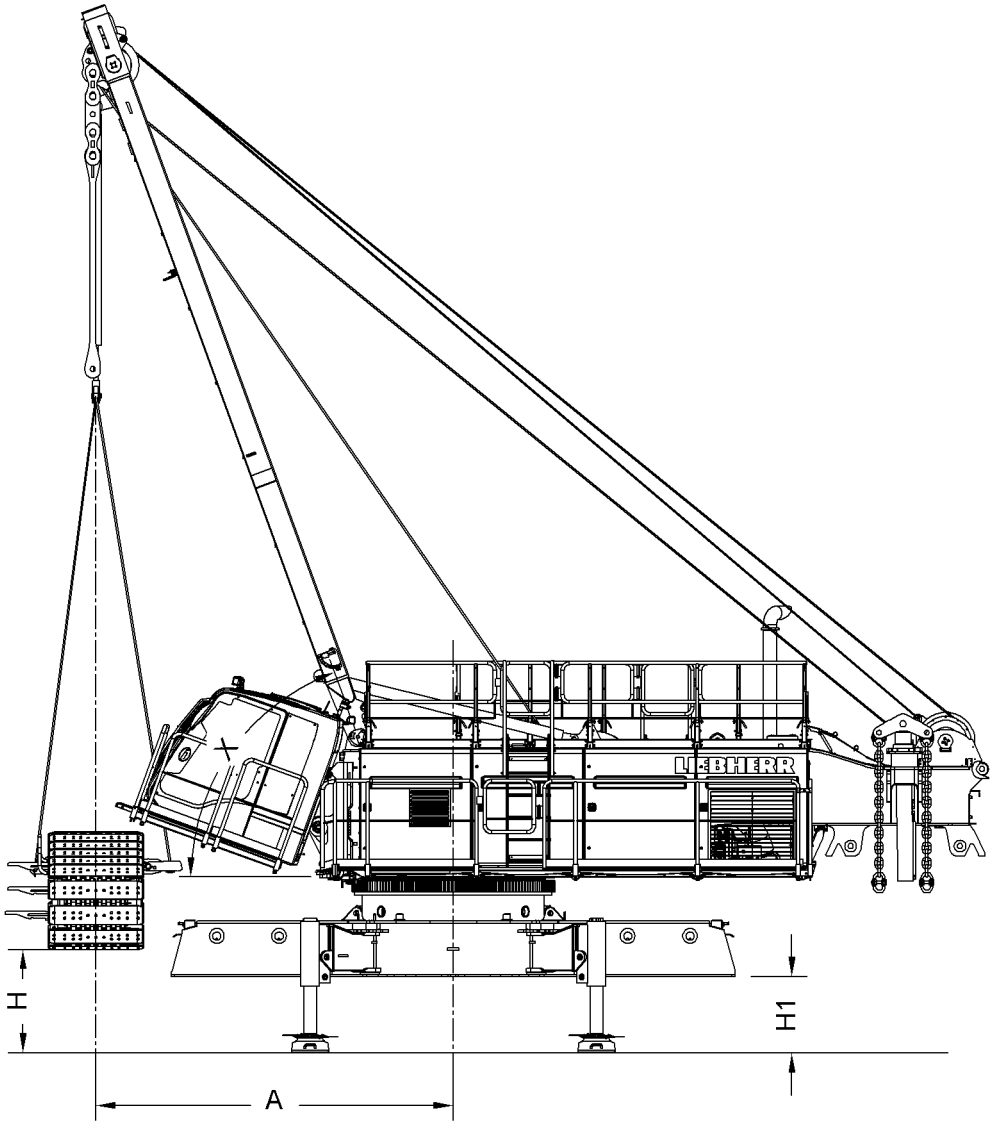

Fig. 2916: Limit values - unloading and mounting the first crawler side frame

Name		Value
A	Maximum radius	4500 mm 14‘ 9“ ft-in
H	Maximum lifting height	1324 mm 4‘ 4“ ft-in
H1	Maximum support height	970 mm 3‘ 2“ ft-in
X	Minimum angle A-frame1	70°

Tab. 461: Limit values - unloading and mounting the first crawler side frame

▶ Move the transport vehicle carrying the crawler side frame as close to the machine as possible.

LWN/LR.x/V03.01//Auslieferung/2015-06-03/en

copyright by
LIEBHERR

NOTICE
Horizontal cabin!
Damage to cabin.

▶ Cabin must be tilted upward before crawler side frame is attached.

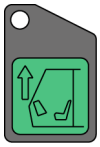

▶ Press the *Cabin tilt up* button on control panel *X11*.
▷ Cabin tilts upward.

CAUTION
Moving folding brackets!
Risk of crushing limbs.

▶ Keep all limbs well clear of moving folding brackets.

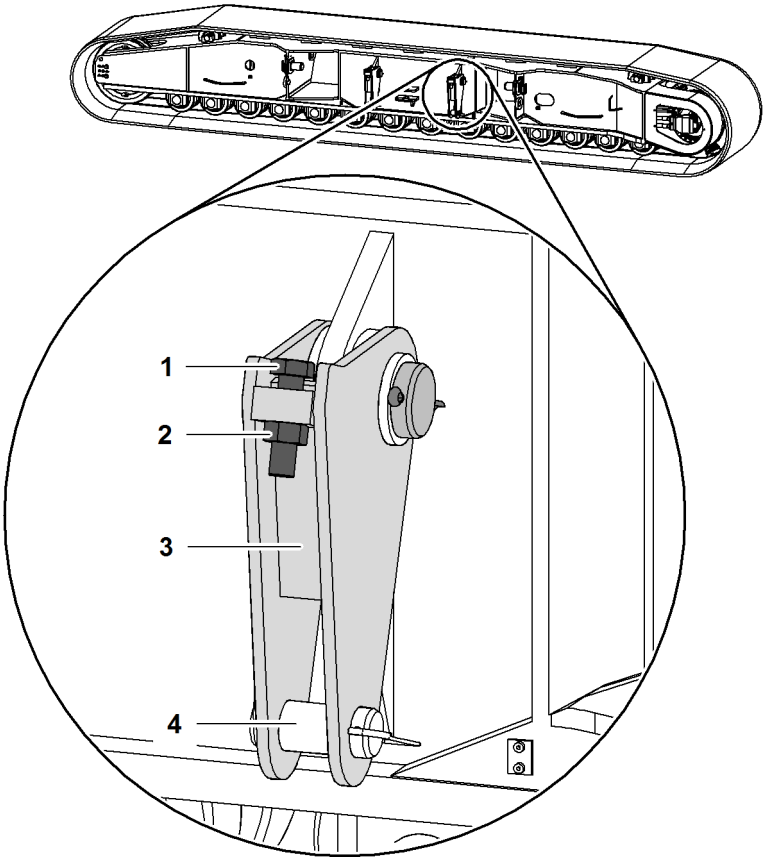

Fig. 2918: Aligning the folding brackets on the crawler side frame

1	Screw	**3**	Folding bracket
2	Nut	**4**	Pin

Adjust angle of the folding bracket **1** by turning the screw **3**.

Once all folding brackets **3** on the crawler side frame are aligned, the crawler side frame hangs level.

▶ Undo nut **2**.

▶ Turn screw **1** to required position.

▶ Tighten nut **2**.

LWN/LR.x/V03.01//Auslieferung/2015-06-03/en

copyright by
LIEBHERR

- ▶ Remove locking spring and pin **4**.
- ▶ Manually lift folding bracket **3**.
- ▶ Rig sling gear to folding bracket **3**.
- ▶ Insert pin **4**.
- ▶ Secure pin **4** with locking spring.
- ▶ Repeat procedure with all folding brackets **3**.
- ▶ Slightly lift crawler side frame.
  - ▷ Crawler side frame is level with undercarriage:

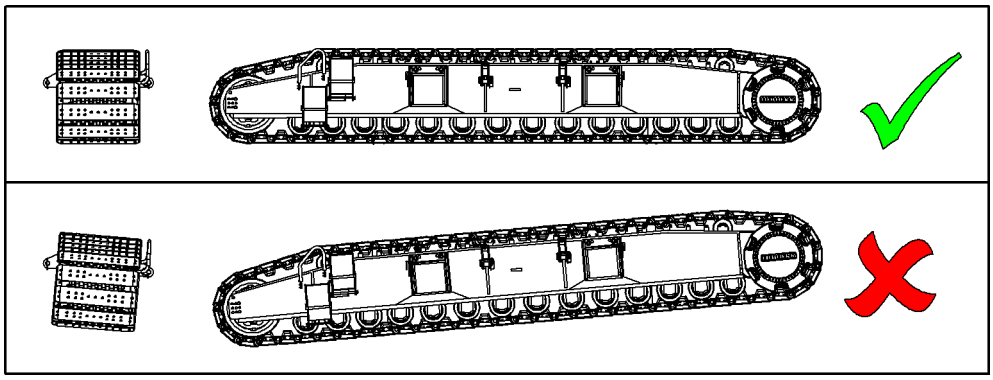

Fig. 2919: Crawler side frame is level with undercarriage

If crawler side frame is not level with undercarriage:

- ▶ Set down crawler side frame.
- ▶ Realign folding brackets **3** on crawler side frame.
- ▶ Repeat procedure until crawler side frame is level with undercarriage.

LWN/LR.x/V03.01//Auslieferung/2015-06-03/en

copyright by
LIEBHERR

Installing the first crawler side frame

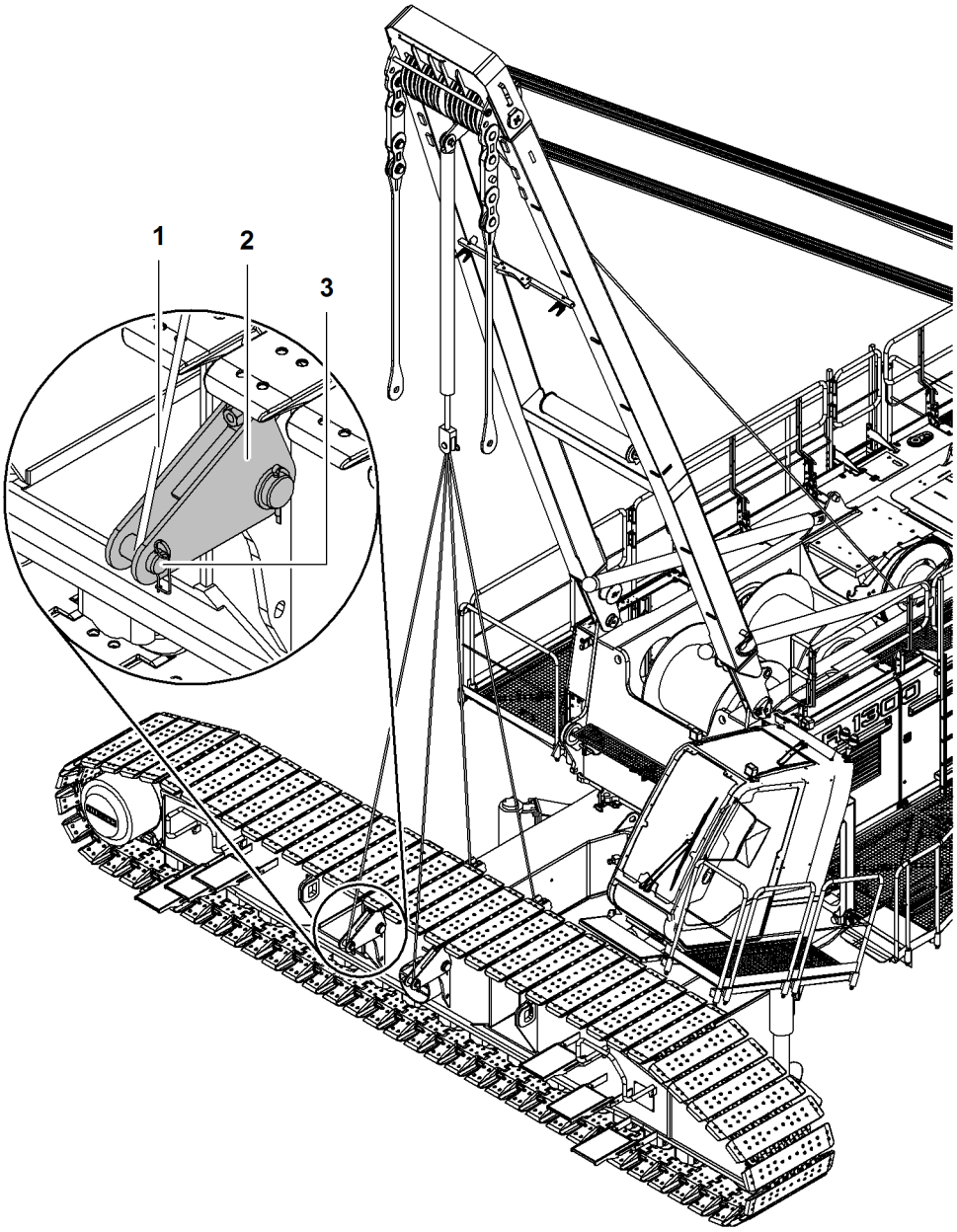

Fig. 2920: Installing the first crawler side frame

1 Sling gear
2 Folding bracket
3 Pin

WARNING
Machine swings with a suspended load!
Death, crushing of body parts.

- ▶ Ensure that nobody is located in the danger zone.
- ▶ Leave danger zone.

- ▶ Lifting the crawler side frames from the transport vehicle.
- ▶ Remove transport vehicle.

LWN/LR.x/V03.01//Auslieferung/2015-06-03/en

copyright by
LIEBHERR

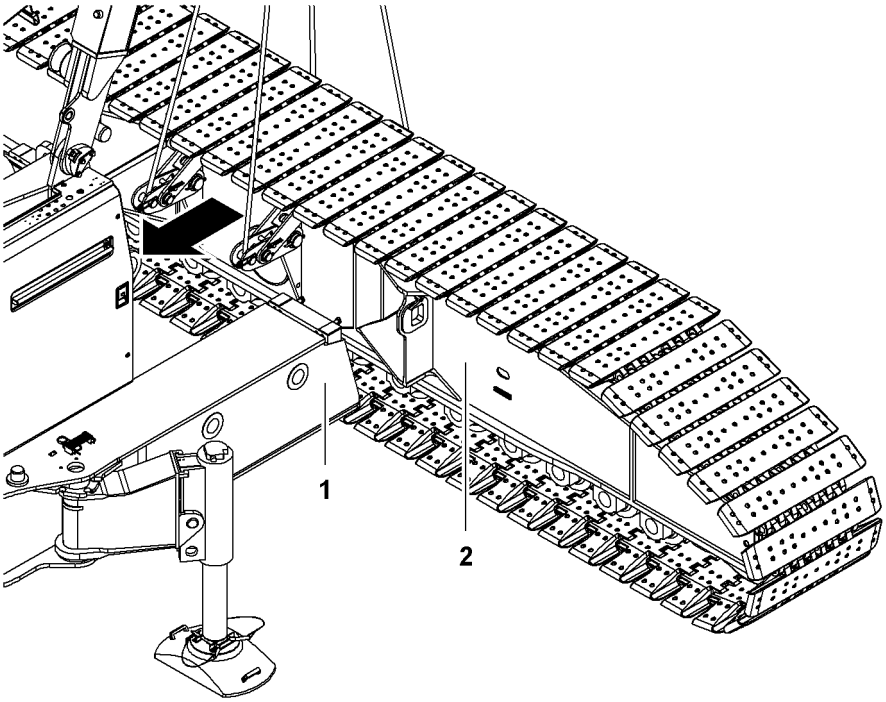

Fig. 2921: Mount first crawler side frame on struts

1 Strut (2x) **2** Crawler side frame

▶ Guide crawler side frame **2** to the struts **1** by lifting the main boom base section and lowering the assembly cylinder.

▶ With the assistance of the signalman, align the crawler side frame **2** exactly on the struts **1** of the undercarriage.

NOTICE
Incorrect mounting of crawler side frames **2**!
Damage to machine.

▶ Mount crawler side frame **2** slowly, step by step and evenly.

▶ Align crawler side frame **2** symmetrically so it can be pinned from both sides.

LWN/LR.x/V03.01//Auslieferung/2015-06-03/en

copyright by
LIEBHERR

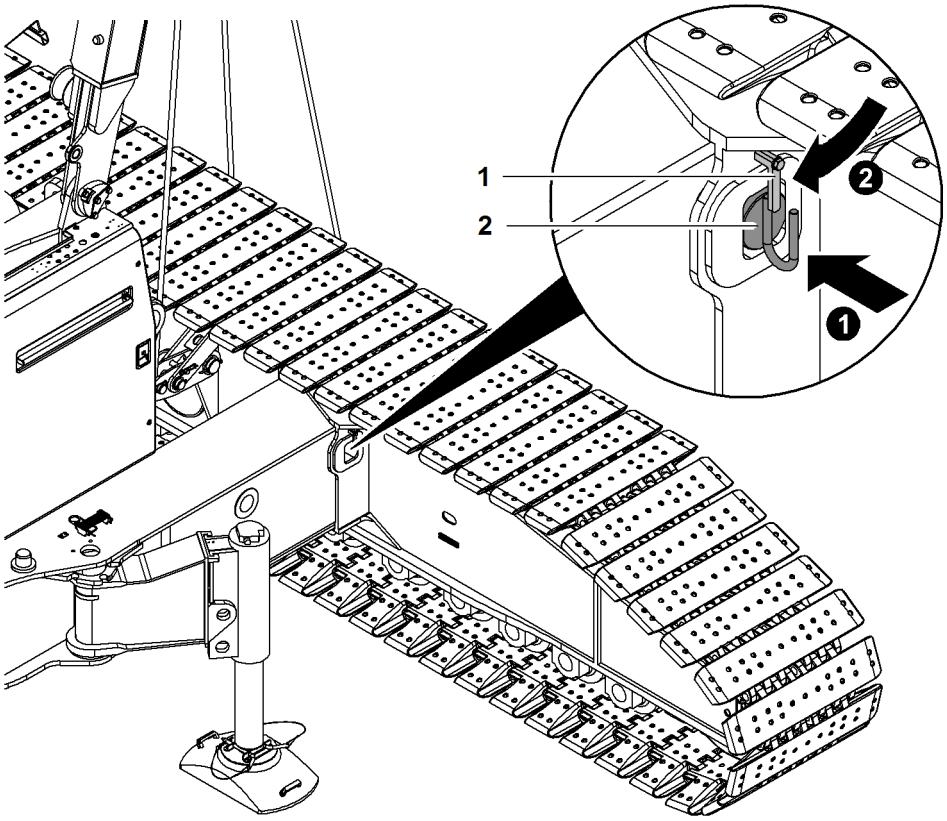

Fig. 2922: Pinning the first crawler side frame

1 Safety lever **2** Pin

▶ Pin crawler side frame to strut (observe installation position of pin **2**).

▶ Undo safety lever **1** screw.

▶ Pull down safety lever **1**.

▶ Tighten screw.

LWN/LR.x/V03.01//Auslieferung/2015-06-03/en

copyright by
LIEBHERR

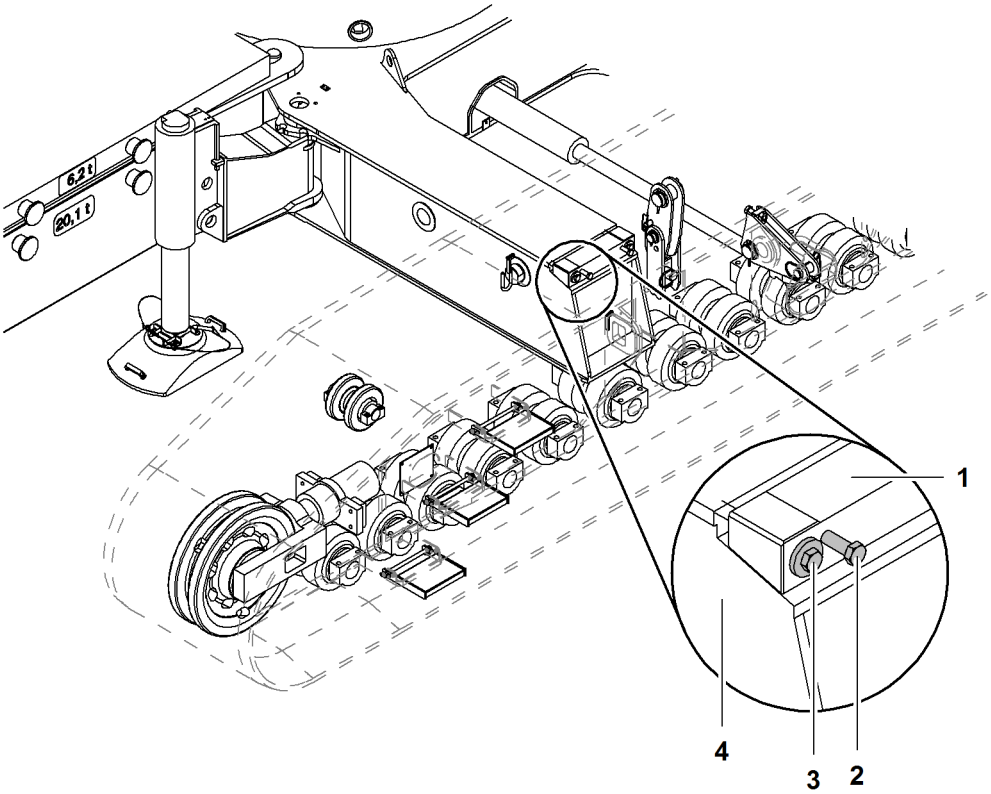

Fig. 2923: Wedging the first crawler side frame

1	Wedge	**3**	Locking screw (2x)
2	Screw (2x)	**4**	Strut

- ▶ Undo screws **2**.
- ▶ Use locking screws **1** to clamp wedge **3** in place.
  ▷ The crawler side frame is now wedged firmly on the struts **4**.
- ▶ Turn in screws **2** as far as they will go.
- ▶ Repeat the pinning and wedging process on the opposite side.
- ▶ Lower assembly cylinder until sling gear slackens off.
- ▶ Detach sling gear.

LWN/LR.x/V03.01//Auslieferung/2015-06-03/en

copyright by
LIEBHERR

Removing the transport brackets

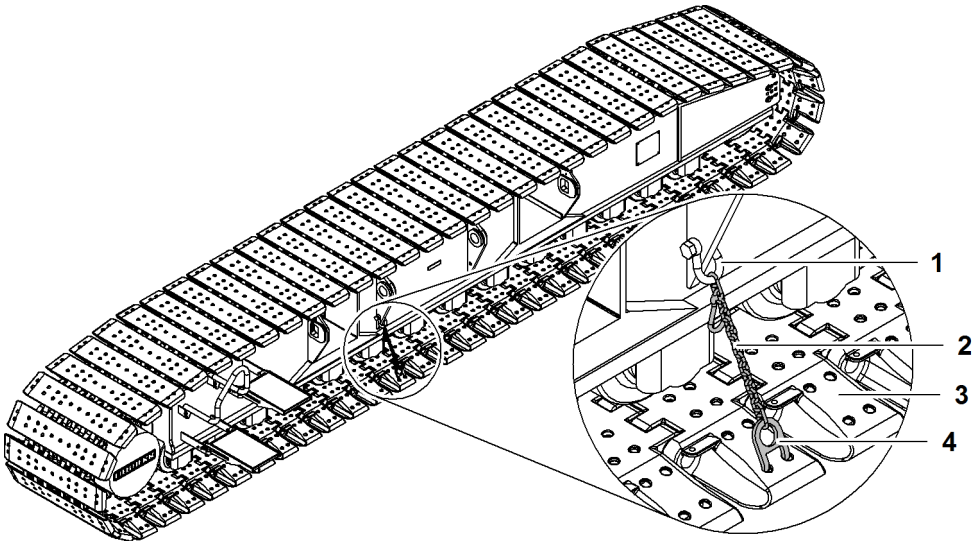

Fig. 2924: Removing the transport brackets

1	Shackle	**3**	Base plate
2	Chain	**4**	Hook

- ▶ Uninstall shackle **1** and chain **2**.
- ▶ Detach hook **4** at base plate **3**.
- ▶ Remove transport bracket.
- ▶ Repeat procedure on opposite side of crawler side frame.

Rigging and mounting the second crawler side frame

DANGER
Inadmissible swing angle of uppercarriage with attached crawler side frame!
Toppling of machine.

- ▶ When viewed from the mounting position of the second crawler side frame, only swing uppercarriage by 90° to the left or right.

- ▶ Rig, adjust and install the second crawler side frame the same way as the first.

DANGER
Incorrect lowering of machine!
Toppling of machine.

- ▶ Lower machine carefully and leveled.

- ▶ Lower machine.
- ▶ Retract jacks.

Mounting the second crawler side frame where space is limited

If it is necessary to swing 180° from the mounting position in order to attach the second crawler side frame, then carry out the following process steps.

LWN/LR.x/V03.01//Auslieferung/2015-06-03/en

copyright by
LIEBHERR

Make sure the following prerequisites are met:

- ❑ Two support pads with a height of at least 1000 mm (3‘ 3“ ft-in) x 1000 mm (3‘ 3“ ft-in) and 150 mm (5.91“ in) are available.

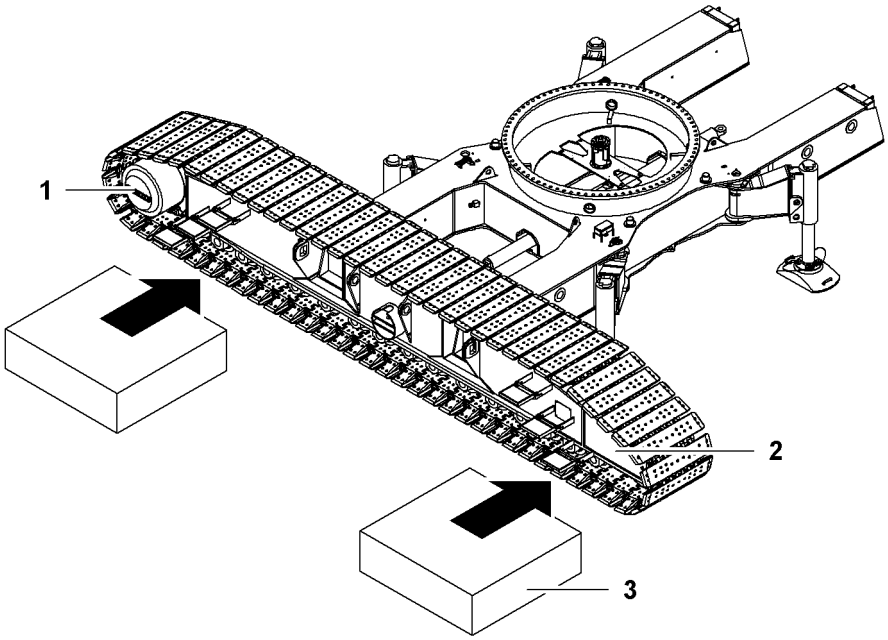

Fig. 2925: Place support plate

1	Crawler drive (tumbler)	**3**	Support plate (2x)
2	Idler wheel		

▶ Place support plate **3** beneath crawler drive (tumbler) **1**.

▶ Place support plate **3** beneath idler wheel **2**.

▶ Lower crawler side frame onto support plates **3**.

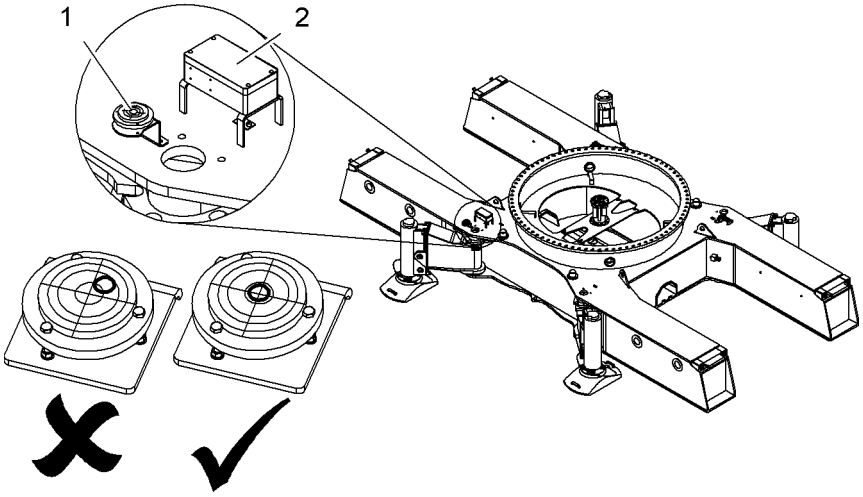

Fig. 2926: Spirit level on undercarriage

1	Spirit level	**2**	Connection plug of cable remote control

▶ Level the undercarriage.

It is not necessary to take account of a critical angle for the radius of A-frame1.

Uppercarriage can be swung as required.

LWN/LR.x/V03.01//Auslieferung/2015-06-03/en

copyright by LIEBHERR

- ▶ Rig, adjust and install the second crawler side frame the exact same way as the first.
- ▶ Slightly lift machine.
- ▶ Remove support plates.

DANGER
Incorrect lowering of machine!
Toppling of machine.

- ▶ Lower machine carefully and leveled.

- ▶ Lower machine.
- ▶ Retract jacks.

Connecting hydraulic lines of crawler

Make sure the following prerequisites are met:
- ❑ Hand lever for multi-coupling is available.
- ❑ Diesel engine is turned off.

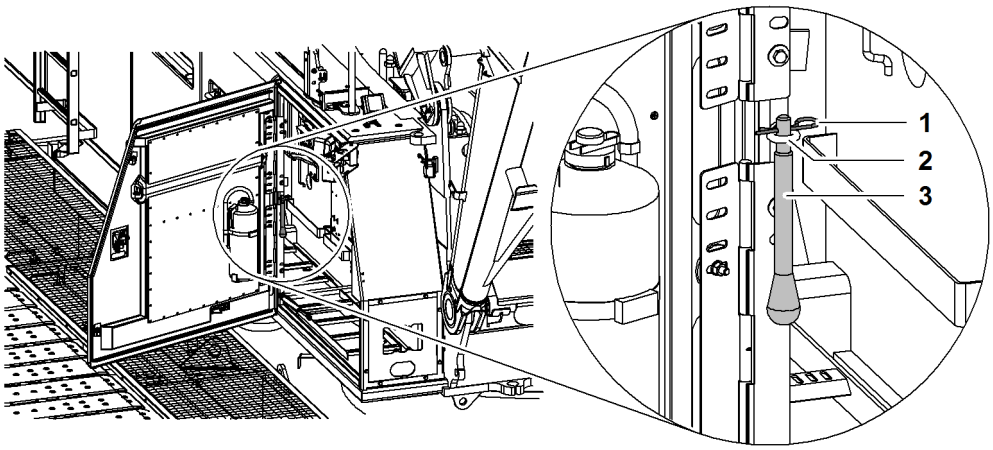

Fig. 2927: Transport bracket for hand lever of multi-coupling

1 Locking spring
2 Ring
3 Hand lever

- ▶ Lift hand lever **3** and remove locking spring **1**.
- ▶ Remove hand lever **3** downwards from ring **2**.

LWN/LR.x/V03.01//Auslieferung/2015-06-03/en

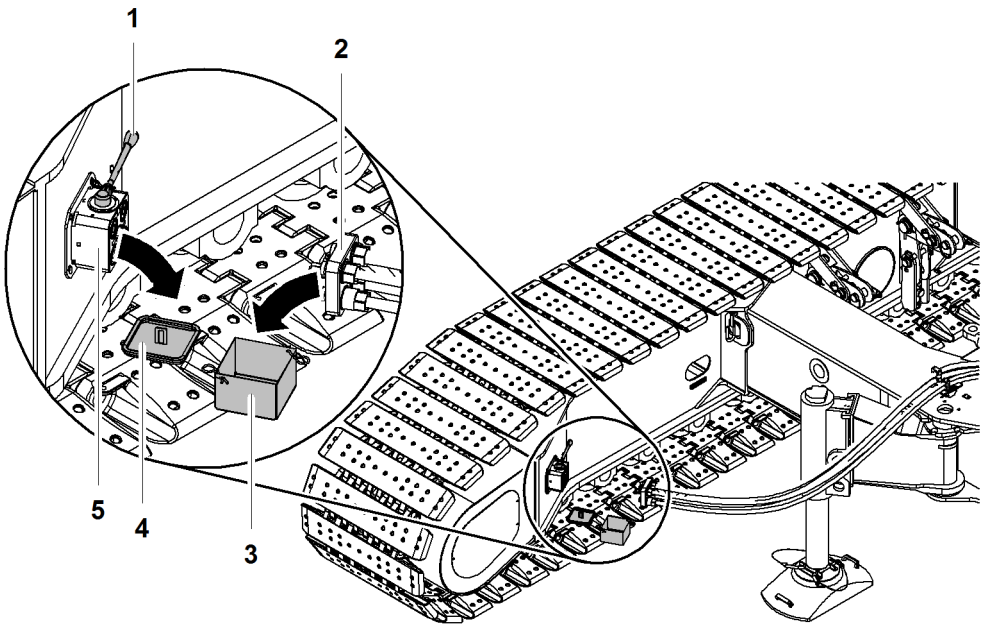

Fig. 2928: Connecting hydraulic lines of crawler

1	Hand lever	**4**	Cover
2	Multi-coupling (undercarriage)	**5**	Multi-coupling (crawler side frame)
3	Cover		

▶ Fit the hand lever **1** of the multi-coupling.

▶ Remove locking springs on cover **3**.

▶ Turn hand lever **1** in the direction of the arrow.
▷ Cover **4** is loose.

▶ Stow away cover **3 + 4**.

NOTICE
Dirty multi-couplings!
Damage to hydraulic system.

▶ Clean multi-couplings before connecting.

▶ Connect multi-couplings **2 + 5**.

▶ Move the hand lever until the lock engages.
▷ Multi-couplings are visibly and audibly pulled together.
▷ Multi-coupling indicating pins stick out:

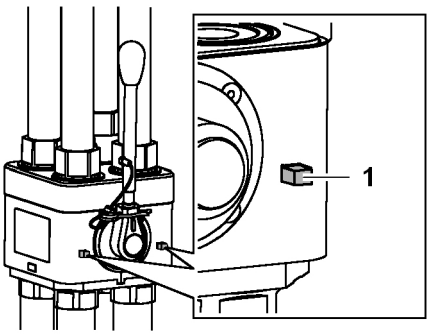

Fig. 2929: Latched multi-coupling

1 Indicating pin (2x)

LWN/LR.x/V03.01//Auslieferung/2015-06-03/en

copyright by
LIEBHERR

- ▶ Disassemble the hand lever of the multi-coupling and remove.
- ▶ Repeat procedure with second crawler side frame.

Unfolding steps from transport position

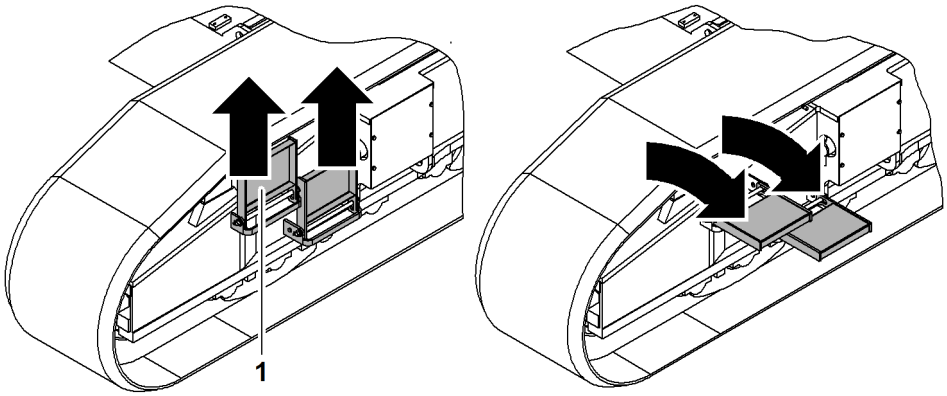

Fig. 2930: Unfolding steps from transport position

1 Steps (2x)

- ▶ Lift steps **1** completely.
- ▶ Fold down steps **1**.

7.4.19 Using the machine as assembly crane

Ensure that the following conditions are fulfilled:

- ❑ Approved sling gear is available (For more information see: 6.9 Rigging equipment and/or sling gear, page 1100) .

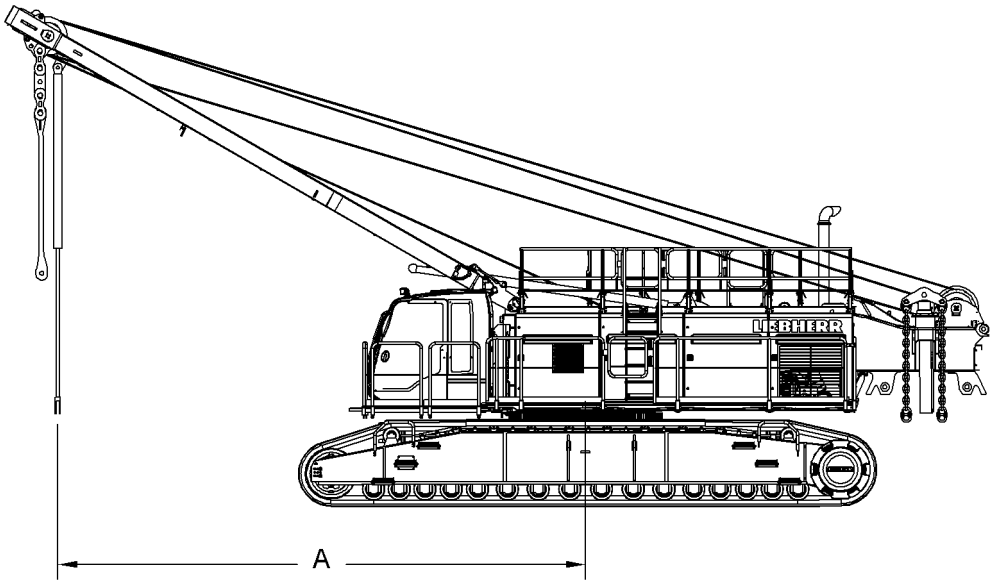

Fig. 2931: Using the machine as assembly crane

LWN/LR.x/V03.01//Auslieferung/2015-06-03/en

copyright by
LIEBHERR

DANGER
Maximum radius exceeded!
Machine toppling over.

▶ Maximum radius **A** must not exceed 9200 mm (30‘ 2“ ft-in).

▶ Unwind the boom winch.
▷ A-frame 1 will move forwards.

▶ Press the *Assembly cylinder* button on control panel *X23*.
▷ Assembly cylinder is selected.

Procedure on a machine with two multi-directional control levers

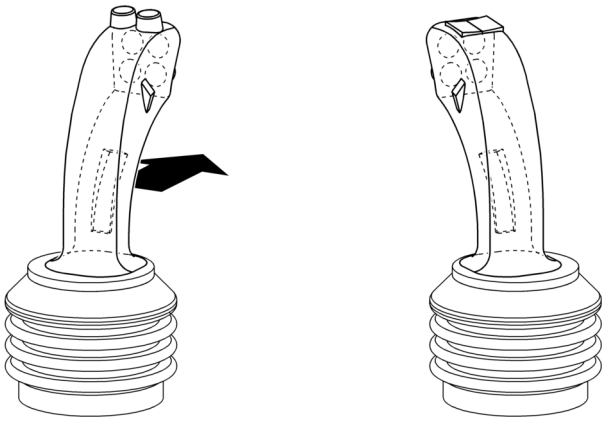

Fig. 2934: Extending the assembly cylinder with multi-directional control lever

▶ Push the left multi-directional control lever forwards.
▷ Assembly cylinder extends.

Procedure on a machine with a multi-directional control lever and a double T-lever

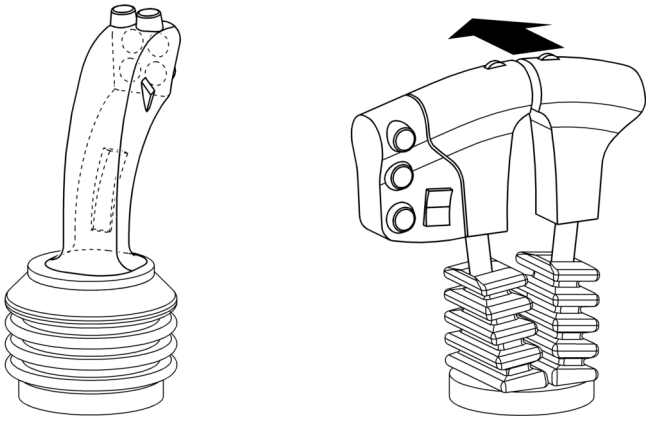

Fig. 2936: Extending the assembly cylinder using the double T-lever

▶ Push the outer T-control lever forwards.
▷ Assembly cylinder extends.

LWN/LR.x/V03.01//Auslieferung/2015-06-03/en

copyright by
LIEBHERR

- ▶ Remove locking spring and pin on the assembly cylinder.
- ▶ Latch sling gear.
- ▶ Insert pin into assembly cylinder and secure with locking spring.

7.4.20 Attach the carbody counterweight

The requirements, which can be found in the load chart, determine whether the machine is equipped with a carbody counterweight.

Note
The basic machine is more manoeuvrable without a carbody counterweight when used as an assembly crane.

Once all boom sections were unloaded and aligned on the ground:
▶ Attaching the carbody counterweight.

DANGER
Unacceptable counterweight!
Machine toppling over.

▶ Attaching the carbody counterweight in accordance with the load chart.

Ensure that the following conditions are fulfilled:
- ❑ Approved sling gear is available (For more information see: 6.9 Rigging equipment and/or sling gear, page 1100) .
- ❑ Basic machine is ready for operation as assembly crane.
- ❑ Basic machine is on ground with sufficient load-bearing capacity.
- ❑ Cylinder adjustment functions are switched on.

Attaching carbody counterweight for undercarriage with fixed track width

Lash carbody counterweight slab 14.3 t (31,526 lb)

▶ Move transport vehicle carrying the carbody counterweight slab 14.3 t (31,526 lb) as close to the machine as possible.

LWN/LR.x/V03.01//Auslieferung/2015-06-03/en

copyright by LIEBHERR

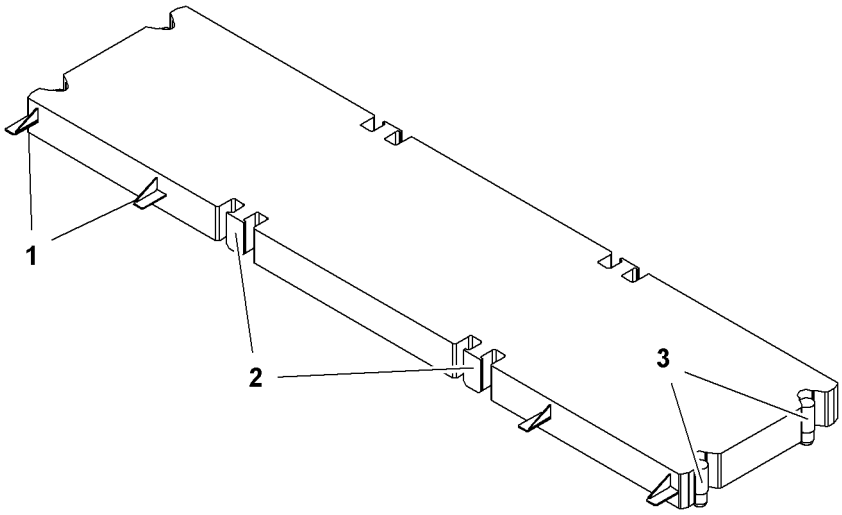

Fig. 2937: Rigging the carbody counterweight slab 14.3 t (31,526 lb)

1 Support for undercarriage platform
2 Lifting point (4x)
3 Locking device (4x)

The uppercarriage can be swung by 360° without restriction.

▶ Place assembly cylinder centrally above carbody counterweight slab 14.3 t (31,526 lb).

▶ Rig carbody counterweight slab 14.3 t (31,526 lb).

Installing the carbody counterweight slab 14.3 t (31,526 lb)

NOTICE
Horizontal cab!
Damage to cab.

▶ Tilt cabin upwards before attaching the carbody counterweight slab 14.3 t (31,526 lb).

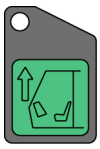

If the cabin is tilted down:
▶ Press the *Tilt cabin up* button on control panel *X11*.
▷ The cab tilts upwards.

WARNING
Machine swings with a suspended load!
Crush, fatal injury.

▶ Make sure that no-one is standing in the danger area.

▶ Leave the danger area.

▶ Lift carbody counterweight slab 14.3 t (31,526 lb) off the transport vehicle.

▶ Drive the transport vehicle away.

LWN/LR.x/V03.01//Auslieferung/2015-06-03/en

copyright by
LIEBHERR

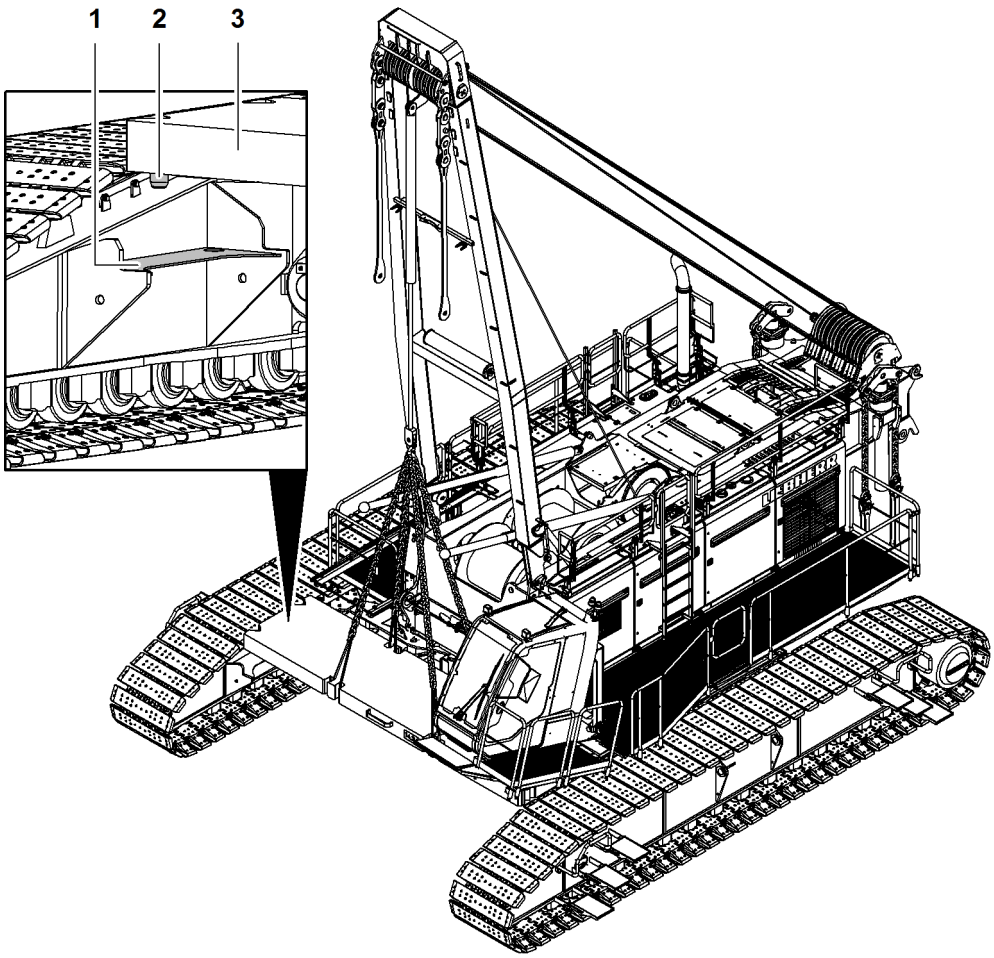

Fig. 2939: Installing the bottom carbody counterweight slab 14.3 t (31,526 lb)

1 Support (2x) for bottom carbody counterweight slab 14.3 t (31,526 lb)

2 Locking device (4x)

3 Bottom carbody counterweight slab 14.3 t (31,526 lb)

▶ Raise A-frame1 and extend assembly cylinder until the bottom carbody counterweight slab 14.3 t (31,526 lb) **3** is positioned above its installation position.

NOTICE
Incorrect positioning of bottom carbody counterweight slab 14.3 t (31,526 lb)!
Damage to bottom carbody counterweight slab 14.3 t (31,526 lb).

▶ Place locking devices **2** for bottom carbody counterweight slab 14.3 t (31,526 lb) **3** precisely in the supports **1** of bottom carbody counterweight slab 14.3 t (31,526 lb).

▶ Insert bottom carbody counterweight slab 14.3 t (31,526 lb) **3** in supports **1** for bottom carbody counterweight slab 14.3 t (31,526 lb).

▶ Remove rigging.

LWN/LR.x/V03.01//Auslieferung/2015-06-03/en

copyright by
LIEBHERR

NOTICE
Incorrect positioning of top carbody counterweight slab 14.3 t (31,526 lb)!
Damage to top carbody counterweight slab 14.3 t (31,526 lb).

▶ Place top carbody counterweight slab 14.3 t (31,526 lb) precisely in the locking device **2** of bottom carbody counterweight slab 14.3 t (31,526 lb) **3**.

▶ Rig and mount top carbody counterweight slab 14.3 t (31,526 lb) the same way as the bottom counterweight slab 14.3 t (31,526 lb) **3**.

▶ Repeat procedure on opposite side.

Installing the steps

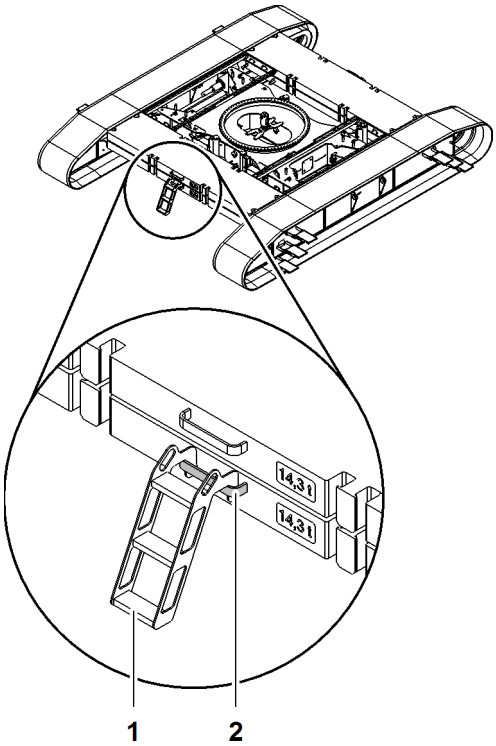

Fig. 2940: Installing the steps

1 Steps **2** Bracket

▶ Suspend steps **1** at bracket **2**.

▶ Repeat procedure on opposite side.

Attaching carbody counterweight for undercarriage* with adjustable track width

Rigging and installing carbody counterweight slab 18.8 t (41,446 lb)

▶ Move transport vehicle with carbody counterweight slab 18.8 t (41,446 lb) as close to machine as possible.

LWN/LR.x/V03.01//Auslieferung/2015-06-03/en

copyright by LIEBHERR

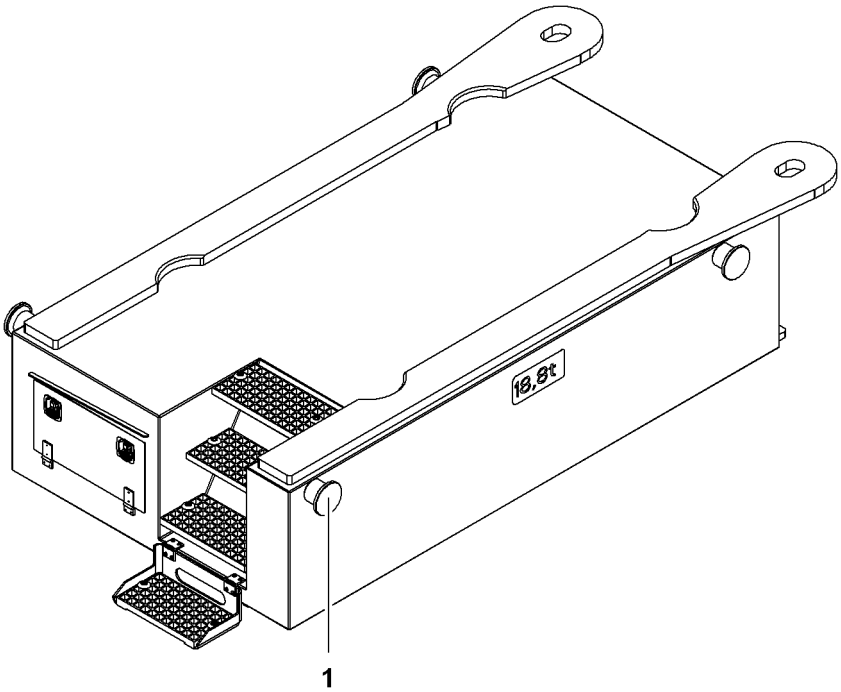

Fig. 2941: Rigging the carbody counterweight slab 18.8 t (41,446 lb)

1 Rigging point (4x)

The uppercarriage can be swung by 360° without restriction.

▶ Position assembly cylinder centrally above carbody counterweight slab 18.8 t (41,446 lb).

▶ Rig carbody counterweight slab 18.8 t (41,446 lb).

WARNING
Machine swings with a suspended load!
Death, crushing of body parts.

▶ Ensure that nobody is located in the danger zone.

▶ Leave danger zone.

▶ Lift carbody counterweight slab 18.8 t (41,446 lb) off the transport vehicle.

▶ Remove transport vehicle.

LWN/LR.x/V03.01//Auslieferung/2015-06-03/en

copyright by
LIEBHERR

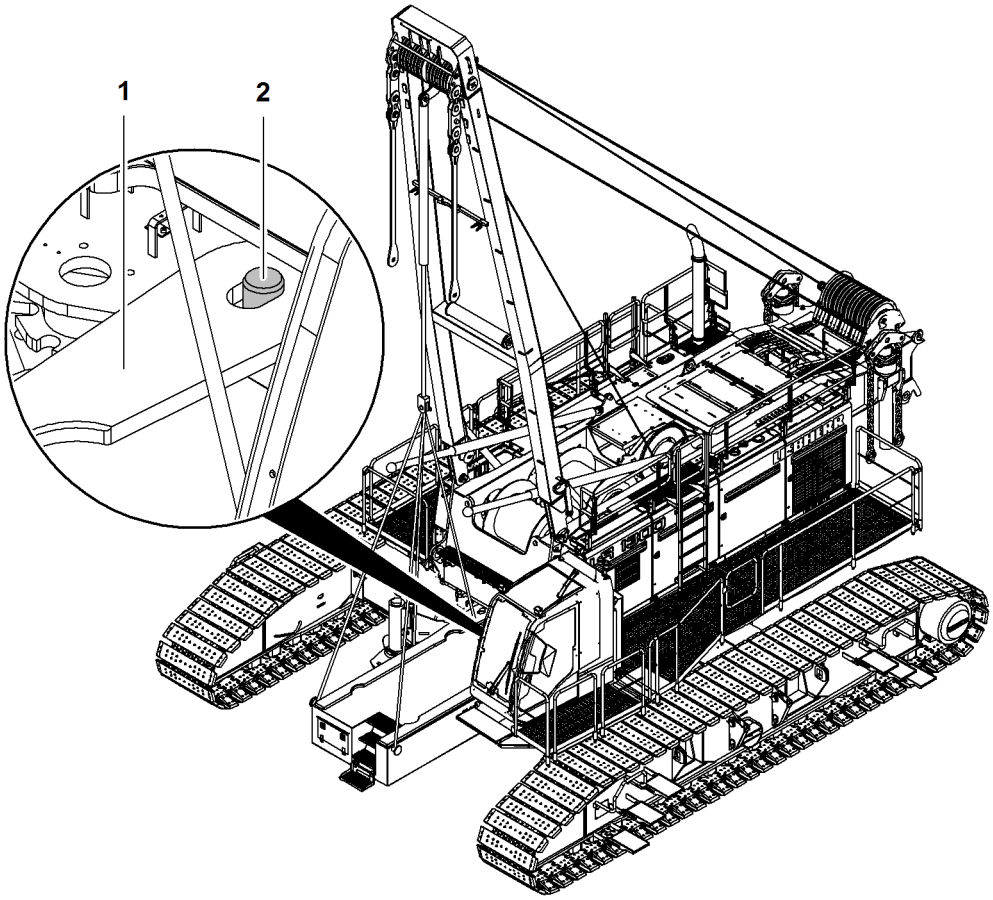

Fig. 2942: Inserting carbody counterweight slab 18.8 t (41,446 lb)

1 Locking device and suspension equipment

2 Pins on basic machine

▶ Lift A-frame1 and extend assembly cylinder until carbody counterweight slab 18.8 t (41,446 lb) is above installation position.

▶ Insert recess of locking device and suspension equipment **1** at pin **2**.

▶ Extend assembly cylinder until carbody counterweight slab 18.8 t (41,446 lb) rests completely on undercarriage.

▶ Remove sling gear.

▶ Repeat procedure on opposite side.

Rigging and installing carbody counterweight slab 7.5 t (16,534 lb)

▶ Move transport vehicle with carbody counterweight slab 7.5 t (16,534 lb) as close to machine as possible.

LWN/LR.x/V03.01//Auslieferung/2015-06-03/en

copyright by
LIEBHERR

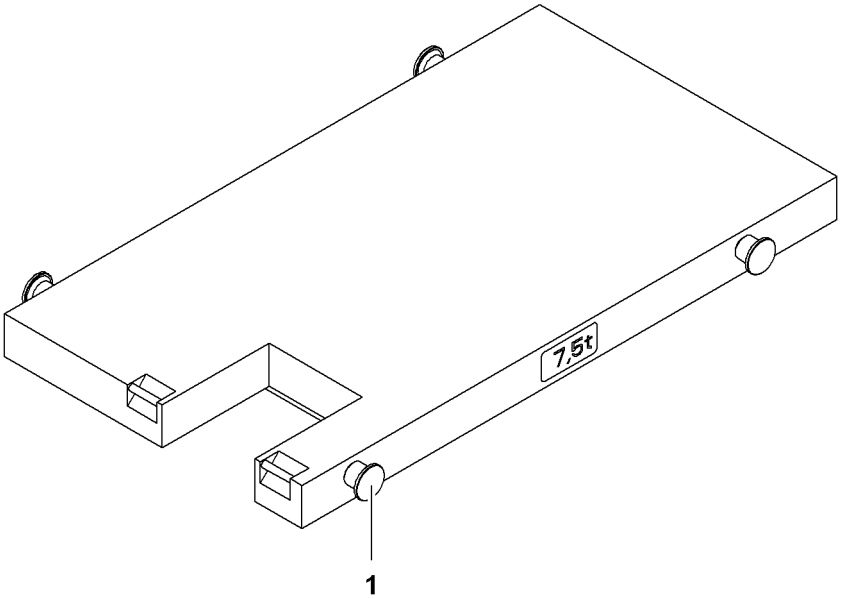

Fig. 2943: Rigging the carbody counterweight slab 7.5 t (16,534 lb)

1 Rigging point (4x)

The uppercarriage can be swung by 360° without restriction.

▶ Position assembly cylinder centrally above carbody counterweight slab 7.5 t (16,534 lb).

▶ Rig carbody counterweight slab 7.5 t (16,534 lb).

WARNING
Machine swings with a suspended load!
Death, crushing of body parts.

▶ Ensure that nobody is located in the danger zone.

▶ Leave danger zone.

▶ Lift carbody counterweight slab 7.5 t (16,534 lb) off the transport vehicle.

▶ Remove transport vehicle.

LWN/LR.x/V03.01//Auslieferung/2015-06-03/en

copyright by
LIEBHERR

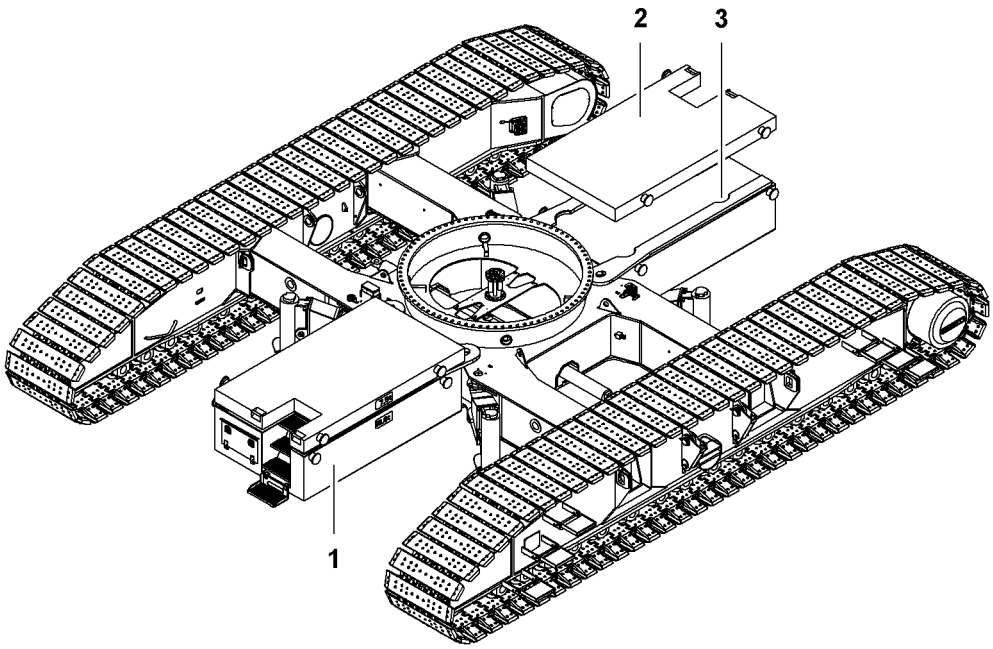

Fig. 2944: Inserting carbody counterweight slab 7.5 t (16,534 lb)

1 Carbody counterweight slab 18.8 t (41,446 lb)
2 Carbody counterweight slab 7.5 t (16,534 lb)
3 Locking device (4x)

NOTICE
Incorrect positioning of carbody counterweight slab 7.5 t (16,534 lb) **2**!
Damage to carbody counterweight slabs.

▶ Place carbody counterweight slab 7.5 t (16,534 lb) **2** precisely in the locking device **3** of carbody counterweight slab 18.8 t (41,446 lb) **1**.

▶ Place carbody counterweight slab 7.5 t (16,534 lb) **2** on carbody counterweight slab 18.8 t (41,446 lb) **1**.

▶ Remove sling gear.

▶ Repeat procedure on opposite side.

7.4.21 Installing platforms at undercarriage with fixed track width

Ensure that the following conditions are fulfilled:
❑ Carbody counterweight is installed.

CAUTION
No platforms at undercarriage with fixed track width!
Risk of falling off the undercarriage.

If platforms have not been installed yet:
▶ Step on undercarriage with utmost care.

▶ Align the uppercarriage parallel to the undercarriage.

LWN/LR.x/V03.01//Auslieferung/2015-06-03/en

copyright by LIEBHERR

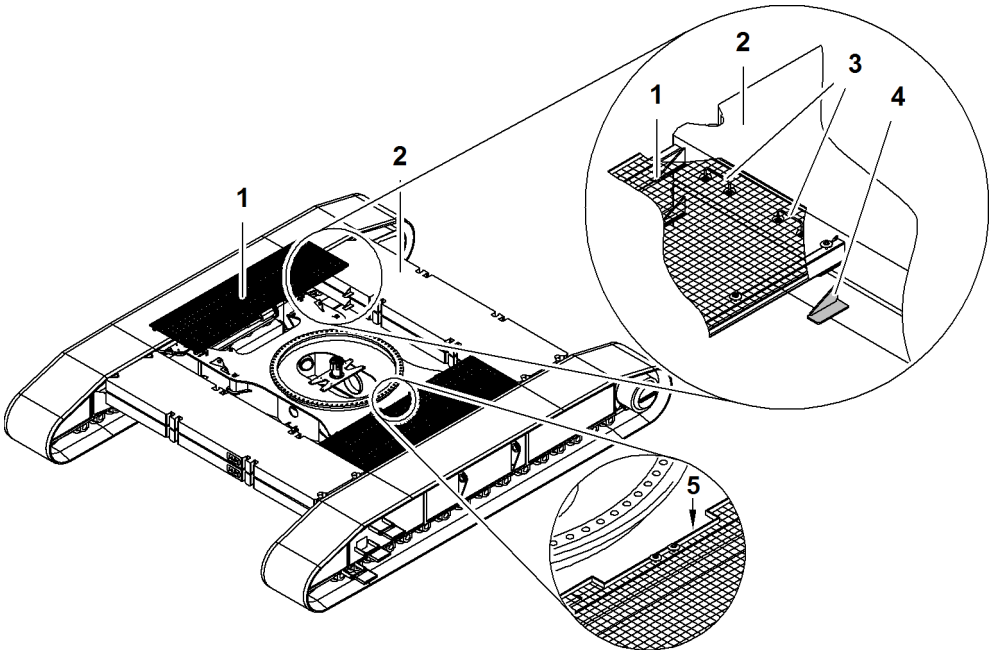

Fig. 2945: Installing platforms at undercarriage with fixed track width

1	Platform (2x)	**4**	Support (8x)
2	Carbody counterweight (4x)	**5**	Recesses platform (2x)
3	Support bracket (8x)		

The platforms **1** on the undercarriage with fixed track width are placed on the supports **4** of the carbody counterweight **2**.

On crawler side frames with 1200 mm (3‘ 11“ ft-in) grousers, the platforms **1** have a recess **5** and are therefore asymmetrical. The recesses **5** of the platforms **1** must be located on the side of the swing ring.

On crawler side frames with 1500 mm (4‘ 11“ ft-in) grousers, the platforms **1** are identical and symmetric.

CAUTION
Boom walkways positioned incorrectly!
Risk of crushing limbs.

▶ When installing the platforms **1**, do not move limbs between the carbody counterweight **2** and the platform **1**.

▶ Lift platform **1** using the support brackets **3** on both sides.

▶ Place the platform on the supports **4** of the carbody counterweight **2**.

▶ Repeat the procedure on the opposite side.

7.4.22 Fitting the rear counterweight

The requirements, which can be found in the load chart, determine whether the machine is equipped with a rear counterweight.

DANGER
Incorrectly raised ballast slabs!
Machine toppling over.

▶ Rig and lift the counterweight slabs individually.

LWN/LR.x/V03.01//Auslieferung/2015-06-03/en

copyright by
LIEBHERR

The uppercarriage may be turned by 360° without restriction when the rear counterweight is assembled.

Ensure that the following conditions are fulfilled:
- ❑ The requisite carbody counterweight is in place.
- ❑ The ballast slab configuration is known.
- ❑ Horizontal, sufficiently supportive subsoil is available for the rear counterweight.
- ❑ Approved sling gear is available (For more information see: 6.9 Rigging equipment and/or sling gear, page 1100) .

Note

If there is no solid ground available:
▶ use supports.

Positioning basic counterweight slab 14 t (30,864 lb)

▶ Rig basic counterweight slab 14 t (30,864 lb).

▶ Lift basic counterweight slab 14 t (30,864 lb).

▶ Lower basic counterweight slab 14 t (30,864 lb) onto ground or chocks.

Positioning the counterweight slabs 10 t (22,046 lb) and the counterweight slabs 5 t (11,023 lb)

Number of counterweight slabs 10 t (22,046 lb)	Number of counterweight slabs 5 t (11,023 lb)
Possible combination of the counterweight slabs at 124 t (273,369 lb) counterweight weight	
8	6
or	
6	10
or	
4	14
or	
2	18
Possible combination of the counterweight slabs at 114 t (251,323 lb) counterweight weight	
8	4
or	
6	8
or	
4	12
or	
2	16
Possible combination of the counterweight slabs at 104 t (229,277 lb) counterweight weight	

LWN/LR.x/V03.01//Auslieferung/2015-06-03/en

copyright by LIEBHERR

Number of counterweight slabs 10 t (22,046 lb)	Number of counterweight slabs 5 t (11,023 lb)
8	2
or	
6	6
or	
4	10
or	
2	14
Possible combination of the counterweight slabs at 94 t (207,231 lb) counterweight weight	
8	0
or	
6	4
or	
4	8
or	
2	12
Possible combination of the counterweight slabs at 74 t (163,140 lb) counterweight weight	
6	0
or	
4	4
or	
2	8
Possible combination of the counterweight slabs at 54 t (119,048 lb) counterweight weight	
4	0
or	
2	4

Tab. 462: Possible combination of counterweight slabs

DANGER
Ballast slabs are stacked unevenly!
Toppling of machine during operation.

▶ Ballast slabs must always be stacked equally on both sides.

▶ Rig counterweight slab 10 t (22,046 lb).

▶ Lift counterweight slab 10 t (22,046 lb).

▶ Position 10 t (22,046 lb) counterweight slab on 14 t (30,864 lb) basic counterweight slab or on previously laid down 10 t (22,046 lb) counterweight slab.

▶ Repeat procedure with all required counterweight slabs 10 t (22,046 lb).

LWN/LR.x/V03.01//Auslieferung/2015-06-03/en

copyright by LIEBHERR

- ▶ Rig counterweight slab 5 t (11,023 lb).
- ▶ Lift counterweight slab 5 t (11,023 lb).
- ▶ Place counterweight slab 5 t (11,023 lb) on counterweight slab 10 t (22,046 lb) or on previously set down counterweight slab 5 t (11,023 lb).
- ▶ Repeat procedure with all required counterweight slabs 5 t (11,023 lb).

Tying down the rear counterweight

The rear counterweight tie-down can be pinned in six different positions.

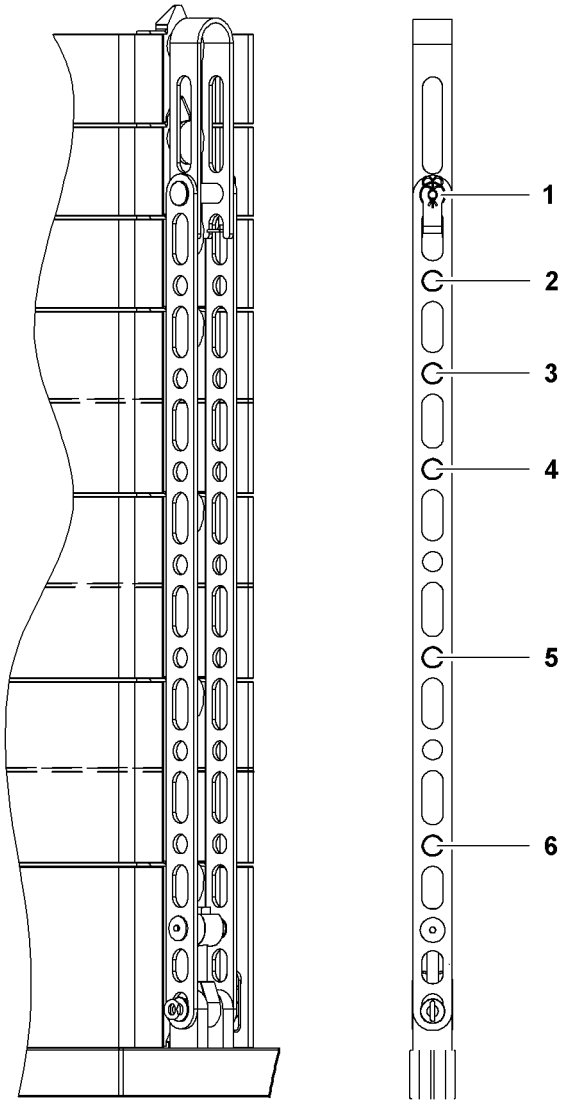

Fig. 2946: Pin connection positions of the rear counterweight tie-down

1	Pin connection position of 124 t (273,369 lb) counterweight weight	**4**	Pin connection position of 94 t (207,231 lb) counterweight weight
2	Pin connection position of 114 t (251,323 lb) counterweight weight	**5**	Pin connection position of 74 t (163,140 lb) counterweight weight
3	Pin connection position of 104 t (229,277 lb) counterweight weight	**6**	Pin connection position of 54 t (119,048 lb) counterweight weight

LWN/LR.x/V03.01//Auslieferung/2015-06-03/en

copyright by
LIEBHERR

▶ Pin counterweight tie-downs in required position.

▶ Secure pins with spring cotter pins.

WARNING
Incorrect lashing of rear counterweight!
Dropping counterweight slabs.

▶ Lash rear counterweight only as described below.

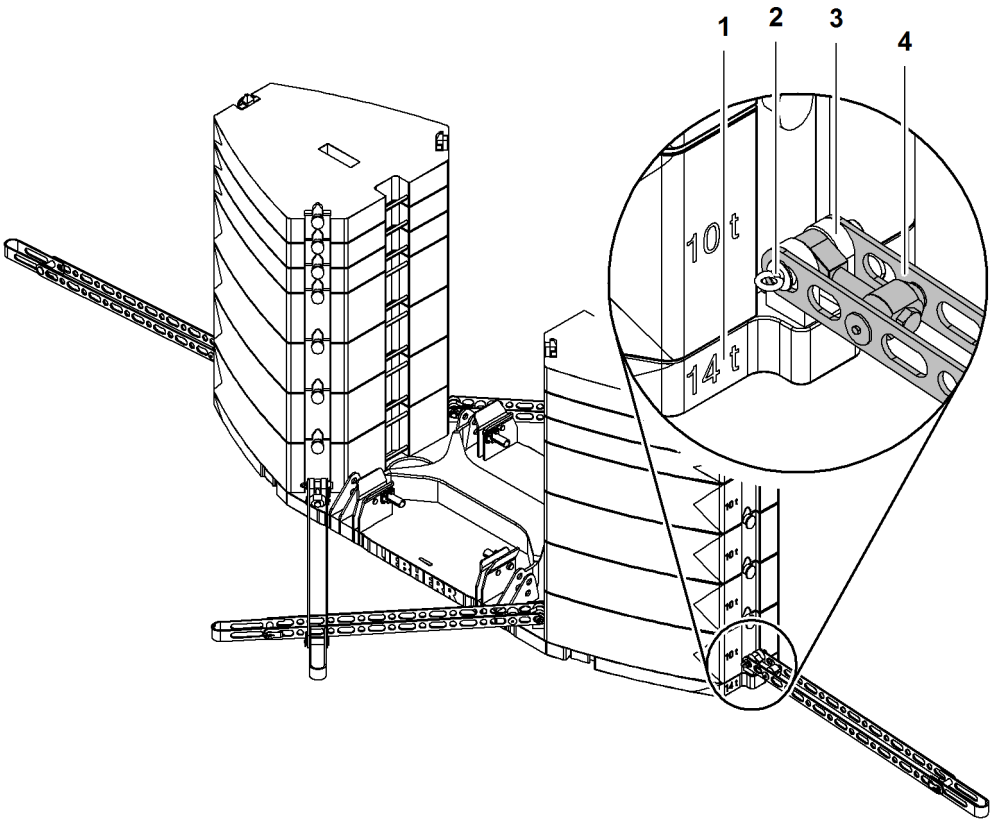

Fig. 2947: Pin counterweight tie-downs with basic counterweight slab 14 t (30,864 lb)

1	Basic counterweight slab 14 t (30,864 lb)	**3**	Pin connection point
2	Pin	**4**	Counterweight tie-down

▶ Pin counterweight tie-down **4** with basic counterweight slab 14 t (30,864 lb) **1**.

▶ Secure pin **2** with locking spring.

▶ Repeat procedure on all pin connection points **3**.

LWN/LR.x/V03.01//Auslieferung/2015-06-03/en

copyright by
LIEBHERR

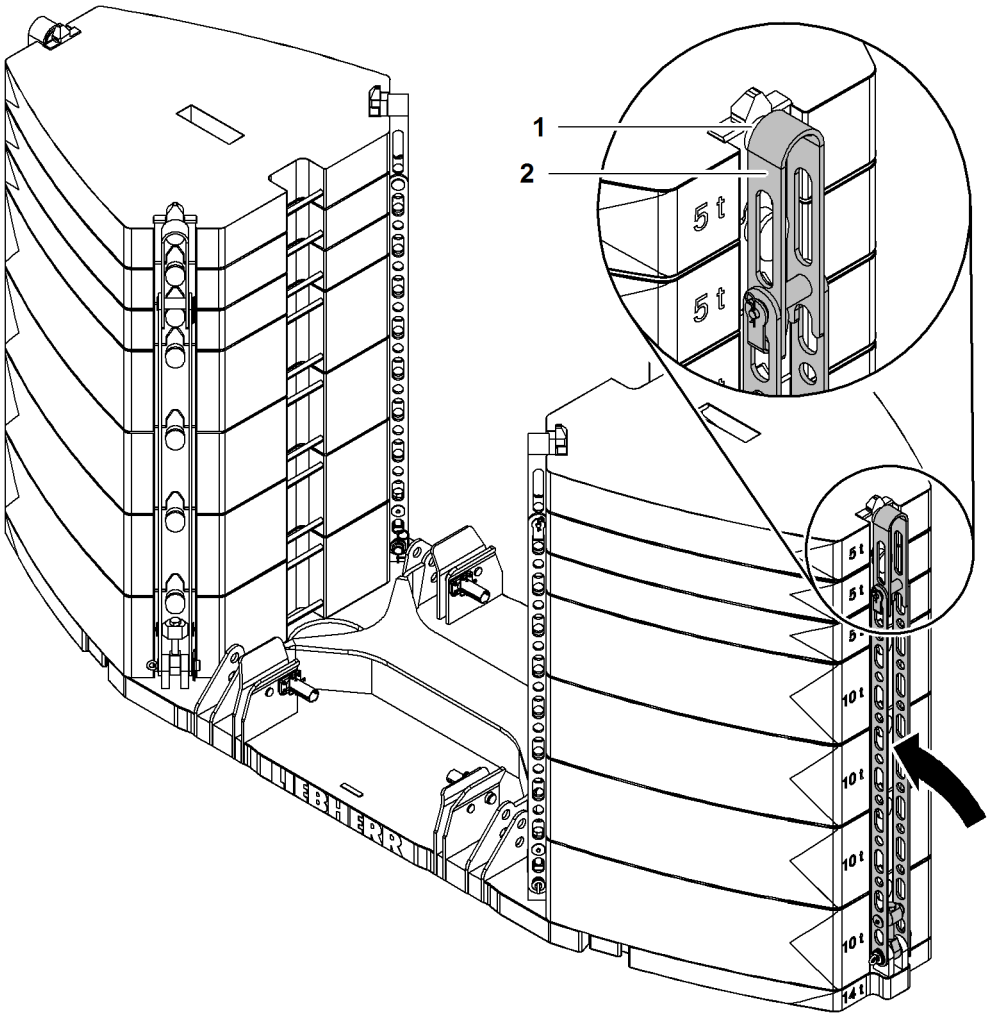

Fig. 2948: Folding up and pinning counterweight tie-downs

1 Rigging point **2** Counterweight tie-down

▶ Fold up counterweight tie-downs **2**.

▶ Lift counterweight tie-down **2** above rigging point **1** of counterweight slab.

▶ Repeat procedure with all counterweight tie-downs **2**.

LWN/LR.x/V03.01//Auslieferung/2015-06-03/en

copyright by
LIEBHERR

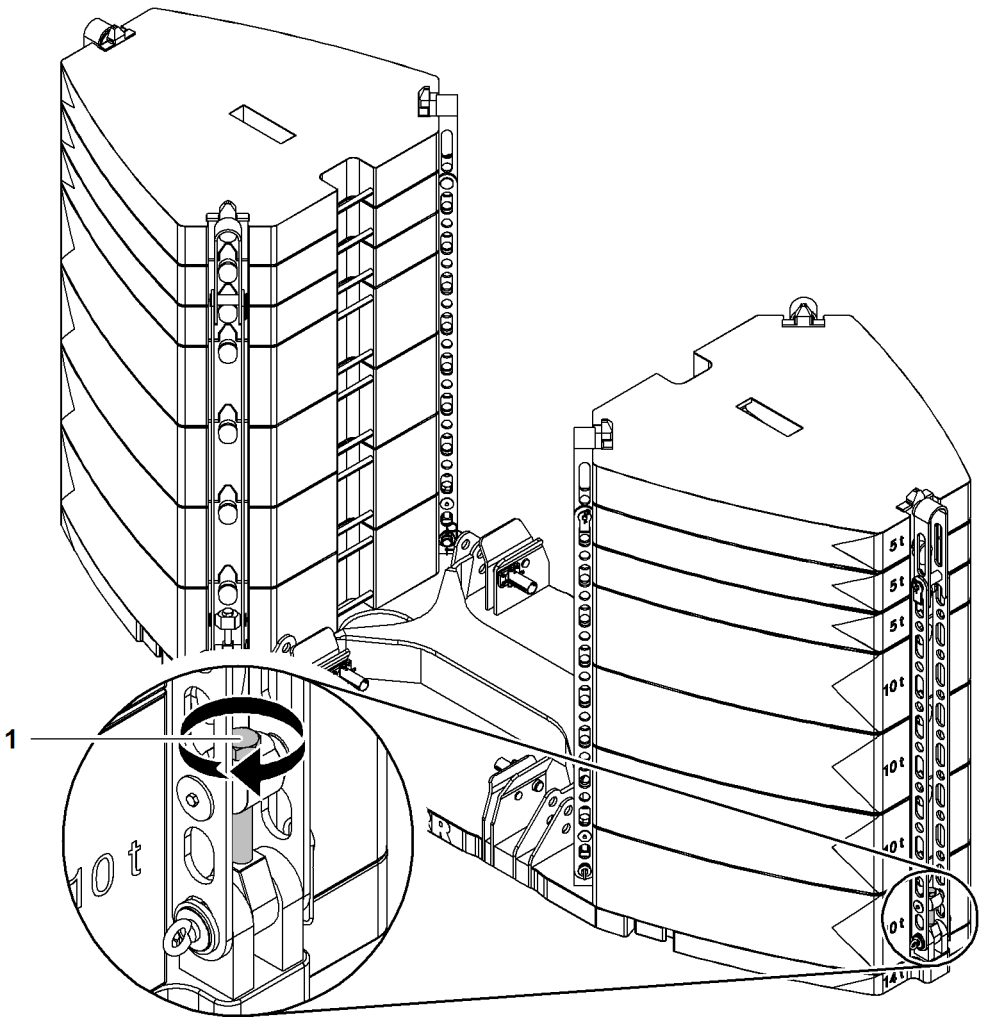

Fig. 2949: Tightening the screws of the rear counterweight tie-down

1 Screw

▶ Tighten the screw **1** hand-tight using a wrench.

▶ Repeat procedure with all counterweight tie-downs.
▷ Rear counterweight is tied down.

LWN/LR.x/V03.01//Auslieferung/2015-06-03/en

copyright by
LIEBHERR

Mount the slinging plates

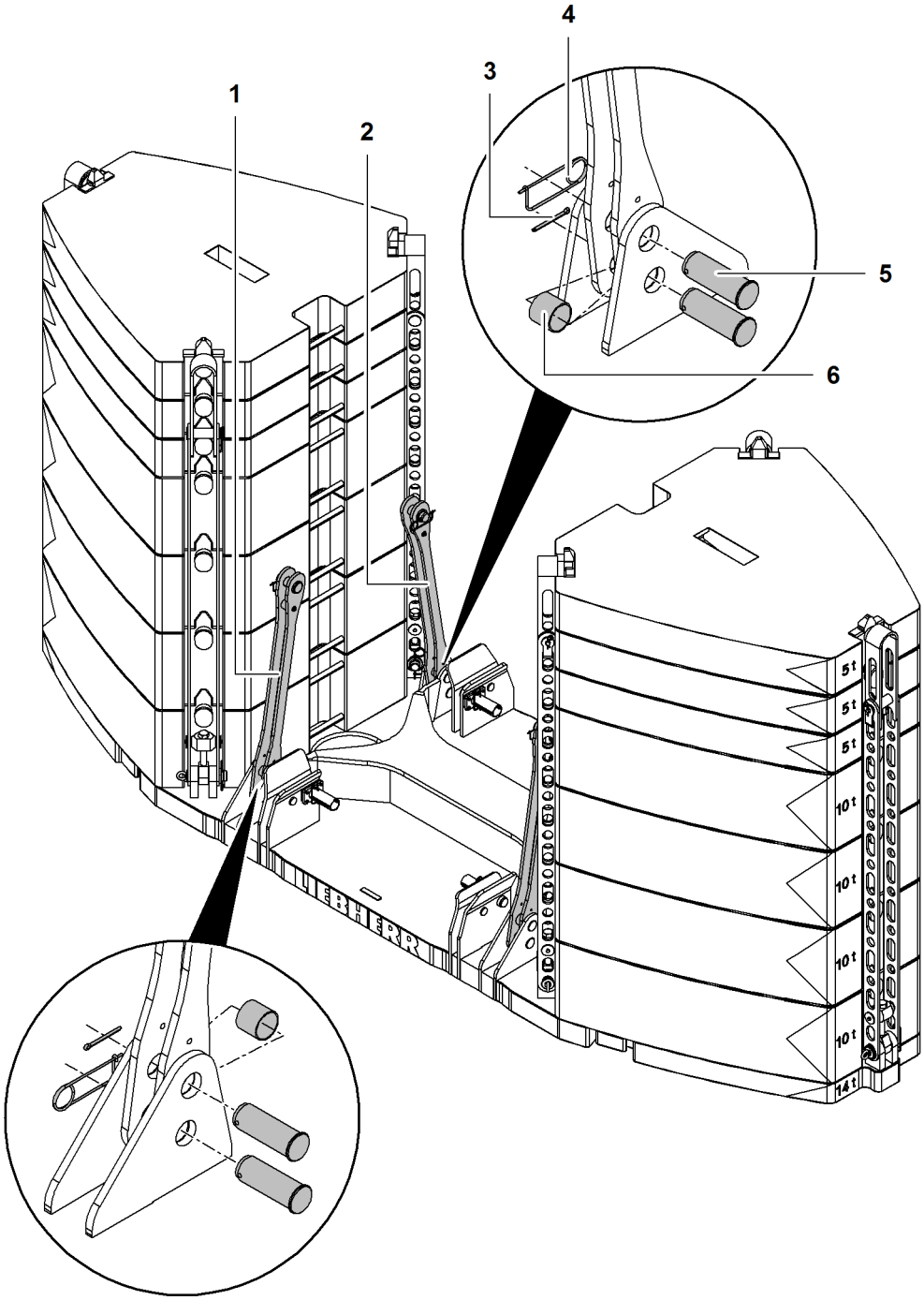

Fig. 2950: Mount the slinging plates

1	Rear slinging plate (2x)	**4**	Locking spring (4x)
2	Front slinging plate (2x)	**5**	Pin (8x)
3	Split pin (4x)	**6**	Spacer ring (4x)

Installing the front slinging plates

▶ Insert spacer rings **6** at bottom pin connection points.

▶ Pin front slinging plates **2** to basic counterweight slab 14 t (30,864 lb).

▶ Secure bottom pins **5** with split pins **3**.

LWN/LR.x/V03.01//Auslieferung/2015-06-03/en

copyright by
LIEBHERR

▶ Secure top pins **5** with locking springs **4**.

Installing the rear slinging plates

▶ Insert spacer rings **6** at top pin connection points.

▶ Pin rear slinging plates **1** to basic counterweight slab 14 t (30,864 lb).

▶ Secure top pins **5** with split pins **3**.

▶ Secure bottom pins **5** with locking springs **4**.

Lifting and pinning the rear counterweight

DANGER
Slewing of uppercarriage with rear counterweight attached not permitted!
Machine toppling over.

▶ Only slew the uppercarriage according to the table (see: tab. 463, page 1224) .

DANGER
Slewing of uppercarriage with narrow track not permitted (exclusively with undercarriage with adjustable track width)!
Machine toppling over.

▶ Ensure that machine is set up with a wide track width.

Permitted uppercarriage turning depending on counterweight		
Initial position: Uppercarriage is parallel to crawler side frames		
Rear counterweight	Carbody counterweight	
	0 t 0.00 lb	Undercarriage with fixed track width: 57 t (125,662 lb) Undercarriage* with adjustable track width: 52.6 t (115,961 lb)
0 t 0.00 lb	360°	360°
54 t 119,048 lb	360°	360° A)
74 t 163,140 lb	±10°	360° A)
94 t 207,231 lb	-	360°
104 t 229,277 lb	-	360°
114 t 251,323 lb	-	±10° (360° B))
124 t 273,369 lb	-	±10°

Tab. 463: Permitted uppercarriage turning depending on counterweight

LWN/LR.x/V03.01//Auslieferung/2015-06-03/en

A) This counterweighting can occur during assembly of basic machine (unacceptable setup).
B) Only permissible if A-frame1 is sufficiently far forward so that the slabs of A-frame1 cylinders lift off of A-frame1.

Ensure that the following conditions are fulfilled:
- ❑ Rear counterweight is assembled and lashed.
- ❑ Work with the assembly cylinder is completed.
- ❑ All boom sections are unloaded and in position.
- ❑ Counterweight hoisting cylinders are retracted.
- ❑ Cylinder adjustment functions on.

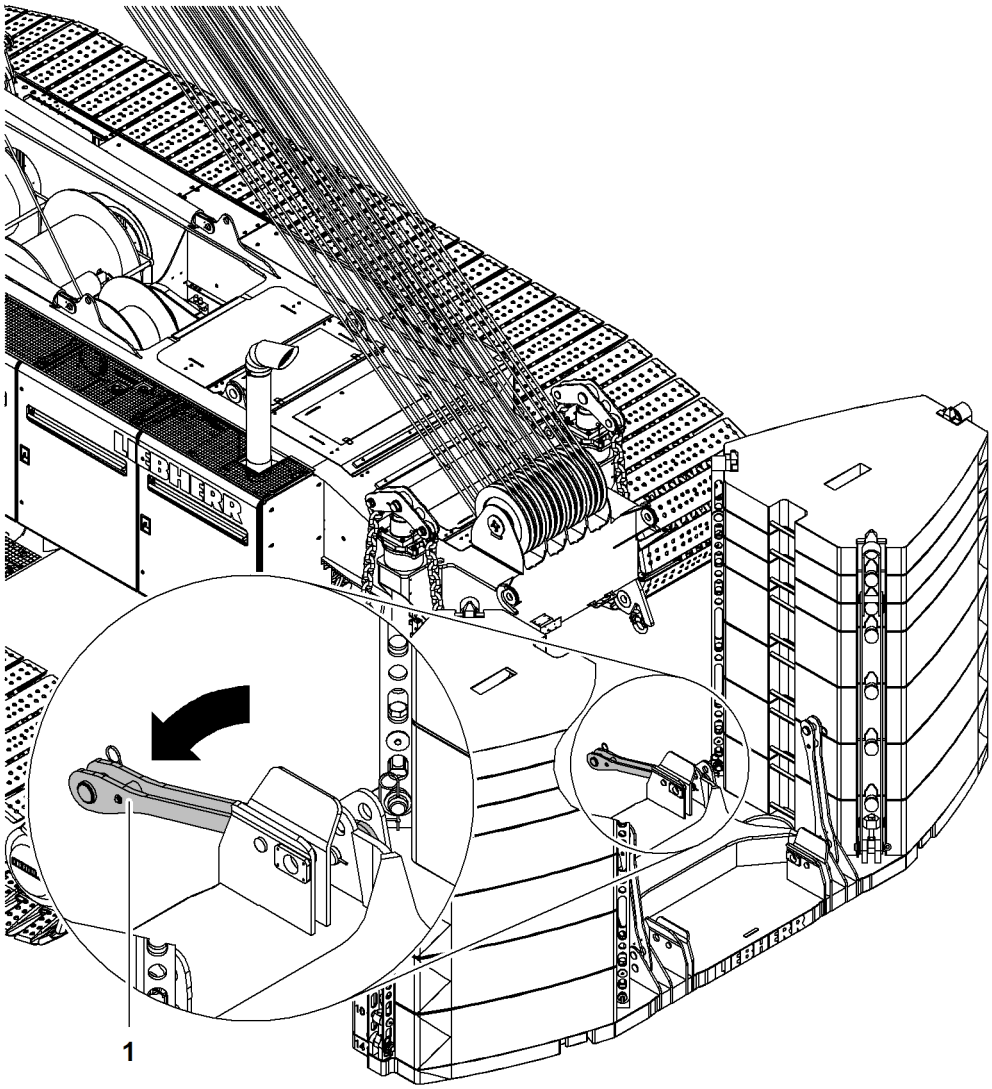

Fig. 2951: Folding the front slinging plates down

1 Front slinging plate (2x)

NOTICE
Improper installation of the rear counterweight!
Damage to machine.

▶ Fold down front slinging plates **1** prior to installing the rear counterweight.

▶ Remove locking springs at top pins.

LWN/LR.x/V03.01//Auslieferung/2015-06-03/en

copyright by LIEBHERR

- ▶ Remove top pins.
- ▶ Fold down front slinging plates **1**.

DANGER
Incorrect lifting of rear counterweight!
Machine toppling over.

- ▶ Align uppercarriage parallel to undercarriage when lifting rear counterweight.
- ▶ Align uppercarriage with counterweight hoisting cylinder chains exactly above slinging plates of rear counterweight.

- ▶ Move basic machine backwards to rear counterweight until the chains of the counterweight hoisting cylinders are suspended exactly above the slinging plates of the rear counterweight.
- ▶ Fold up front slinging plates **1**.
- ▶ Insert top pins.
- ▶ Secure top pins with locking springs.
- ▶ Open rear left uppercarriage door.
- ▶ Plug in the cable remote control on the uppercarriage.

LWN/LR.x/V03.01//Auslieferung/2015-06-03/en

copyright by
LIEBHERR

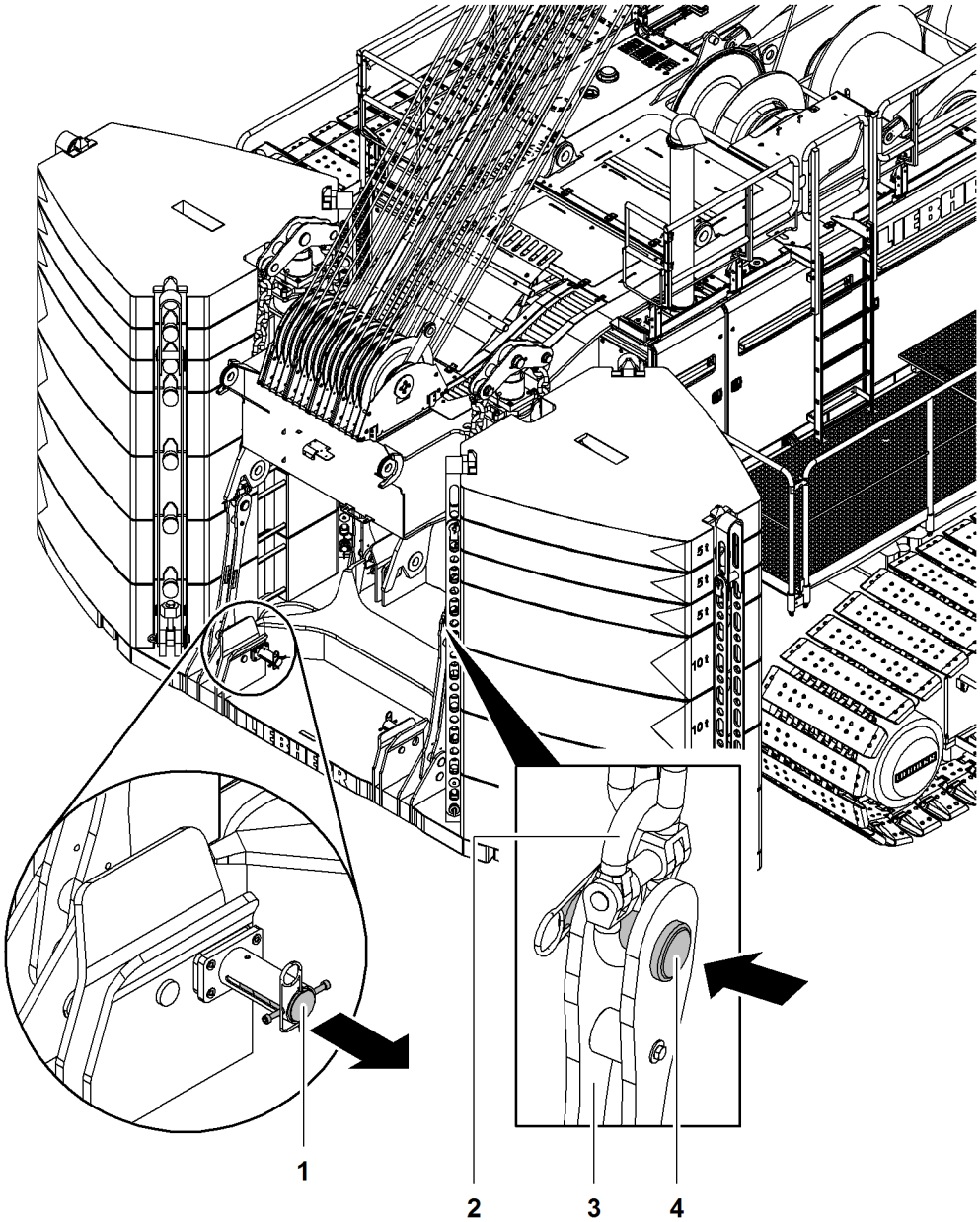

Fig. 2952: Rigging the rear counterweight

1	Pin	**3**	Slinging plate
2	Chain	**4**	Pin

- ▶ Pin chain **2** with slinging plate **3**.
- ▶ Secure pin **4** with washer and locking spring.
- ▶ Pull out pin **1** until stop.
- ▶ Secure pin **1** with locking spring.
- ▶ Repeat procedure on all slinging plates **3** and pin connection points.
- ▶ Using the cable remote control, slowly extend the counterweight hoisting cylinders until the chains **2** are taut.

LWN/LR.x/V03.01//Auslieferung/2015-06-03/en

copyright by
LIEBHERR

NOTICE
Excessive swinging of rear counterweight!
Damage to machine.

▶ Ensure that rear counterweight does not swing during the entire process.

▶ Lift rear counterweight.

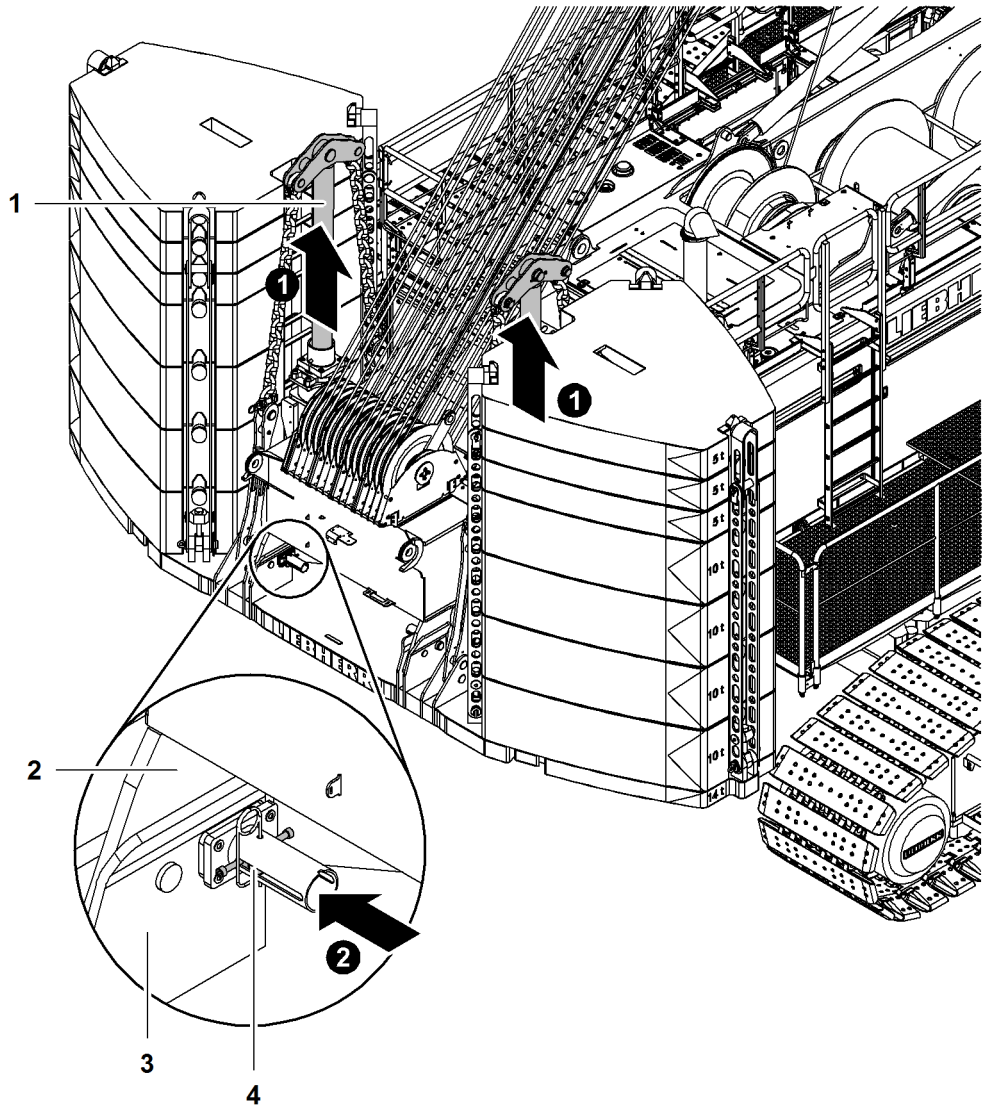

Fig. 2953: Pinning the rear counterweight

1	Counterweight hoisting cylinder (2x)	**3**	Pin connection point (4x) on rear counterweight
2	Pin connection point (4x) on uppercarriage	**4**	Pin (4x)

▶ Fully extend counterweight hoisting cylinder **1**.

LWN/LR.x/V03.01//Auslieferung/2015-06-03/en

copyright by
LIEBHERR

DANGER
Incorrect pin connection of rear counterweight!
Machine toppling over.

- ▶ Pin rear counterweight to basic machine.
- ▶ Secure pins **4**.

If the pin connection points **2** on the uppercarriage match the pin connection points **3** on the rear counterweight:

- ▶ Push in pin **4** until stop.
- ▶ Secure pins **4** with locking springs.
  - ▷ Rear counterweight is pinned and secured.

Chains of the counterweight hoisting cylinders **1** may remain suspended.

- ▶ Fully retract the counterweight hoisting cylinders **1**.
- ▶ Unplug cable remote control on uppercarriage and stow away.
- ▶ Close rear left uppercarriage door.

LWN/LR.x/V03.01//Auslieferung/2015-06-03/en

copyright by
LIEBHERR

7.5 Main boom 2821

System-relevant information for main boom 2821:
- Configuration of main boom
  - Installation position of rope guide (type A)
  - Mid-point suspensions installation positions
- Lengths of mid-point suspensions
- Overview of main boom 2821 steel pendant straps
- Overview of main boom 2821 CF pendant straps
- Reeving diagrams for one rope across main boom head 2821 (load position1)
- Reeving diagrams for two ropes across main boom head 2821 (load position1)
- Reeving diagrams for one rope across auxiliary jib (36 t (79300 lb)) on main boom head 2821 (load position1)
- Reeving diagrams for two ropes across auxiliary jib (36 t (79300 lb)) and main boom head 2821 (load position 1)
- Reeving diagrams jib luffing winch as auxiliary winch

7.5.1 Configuration of main boom

DANGER
Excess length of main boom!
Structural breakdown.

▶ Check main boom length in load chart for validity.

Main boom length	Configuration of main boom (symbolic)
20 m 66 ft	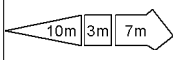
23 m 75 ft	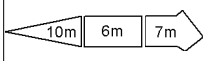
26 m 85 ft	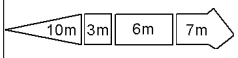
29 m 95 ft	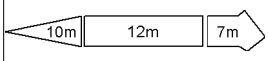
32 m 105 ft	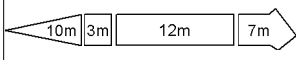
35 m 115 ft	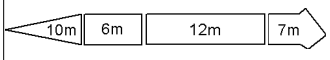
38 m 125 ft	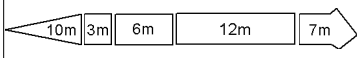
41 m 135 ft	
44 m 144 ft	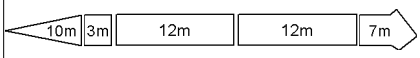
47 m 154 ft	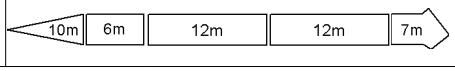

LWN/LR.x/V03.01//Auslieferung/2015-06-03/en

copyright by
LIEBHERR

Main boom length	Configuration of main boom (symbolic)
50 m 164 ft	10m 3m 6m 12m S 12m 7m
53 m 174 ft	10m 12m 12m S 12m 7m
56 m 184 ft	10m 3m 12m 12m S 12m 7m
59 m 195 ft	10m 6m 12m 12m S 12m 7m
62 m 203 ft	10m 3m 6m 12m S 12m 12m 7m
65 m 213 ft	10m 12m 12m S 12m 12m 7m
68 m 223 ft	10m 3m 12m 12m S 12m 12m 7m
71 m 233 ft	10m 6m 12m 12m S 12m 12m 7m
74 m 243 ft	10m 3m 6m 12m S 12m 12m 12m 7m
77 m 253 ft	10m 12m 12m X1 S 12m 12m 12m 7m
80 m 262 ft	10m 3m 12m 12m X1 S 12m 12m 12m 7m
83 m 272 ft	10m 6m 12m 12m X1 S 12m 12m 12m 7m
86 m 282 ft	10m 3m X1 6m 12m S 12m X2 12m 12m 12m 7m
89 m 292 ft	10m X1 12m 12m S 12m X2 12m 12m 12m 7m
92 m 302 ft	10m 3m X1 12m 12m S 12m X2 12m 12m 12m 7m
95 m 312 ft	10m 6m X1 12m 12m S 12m X2 12m 12m 12m 7m
98 m 322 ft	10m 3m 6m X1 12m S 12m 12m X2 12m 12m 12m 7m
101 m 332 ft	10m 12m X1 12m S 12m 12m X2 12m 12m 12m 7m
104 m 342 ft	10m 3m 12m X1 12m S 12m X2 12m 12m 12m 12m 7m

Tab. 464: Configuration of main boom 2821

S - Installation position rope guide (type A)

X1 - Installation position mid-point suspension 1

X2 - Installation position mid-point suspension 2

LWN/LR.x/V03.01//Auslieferung/2015-06-03/en

copyright by
LIEBHERR

7.5.2 Lengths of mid-point suspensions

Main boom length	Stay rope 1 (X1)	Stay rope 2 (X2)
	Rope length	Rope length
77 m 253 ft A)	3.7 m 12‘ 2“ ft-in = 2.1 m (6‘ 11“ ft-in) + 1.6 m (5‘ 3“ ft-in)	
80 m 262 ft A)	3.2 m 10‘ 6“ ft-in = 1.6 m (5‘ 3“ ft-in) + 1.6 m (5‘ 3“ ft-in)	
83 m 272 ft	3.2 m 10‘ 6“ ft-in = 1.6 m (5‘ 3“ ft-in) + 1.6 m (5‘ 3“ ft-in)	
86 m 282 ft	5.6 m 18‘ 4“ ft-in = 3 m (9‘ 10“ ft-in) + 2.6 m (8‘ 6“ ft-in)	2.1 m 6‘ 11“ ft-in
89 m 292 ft	5.1 m 16‘ 9“ ft-in = 2.1 m (6‘ 11“ ft-in) + 3 m (9‘ 10“ ft-in)	1.6 m 5‘ 3“ ft-in
92 m 302 ft	5.1 m 16‘ 9“ ft-in = 2.1 m (6‘ 11“ ft-in) + 3 m (9‘ 10“ ft-in)	1.6 m 5‘ 3“ ft-in
95 m 312 ft	4.7 m 15‘ 5“ ft-in = 2.6 m (8‘ 6“ ft-in) + 2.1 m (6‘ 11“ ft-in)	1.6 m 5‘ 3“ ft-in
98 m 322 ft	4.7 m 15‘ 5“ ft-in = 2.6 m (8‘ 6“ ft-in) + 2.1 m (6‘ 11“ ft-in)	1.6 m 5‘ 3“ ft-in
101 m 332 ft	4.6 m 15‘ 1“ ft-in = 3.0 m (9‘ 10“ ft-in) + 1.6 m (5‘ 3“ ft-in)	1.6 m 5‘ 3“ ft-in
104 m 342 ft	4.2 m 13‘ 9“ ft-in = 2.6 m (8‘ 6“ ft-in) + 1.6 m (5‘ 3“ ft-in)	2.1 m 6‘ 11“ ft-in

Tab. 465: Lengths of mid-point suspensions - main boom 2821

LWN/LR.x/V03.01//Auslieferung/2015-06-03/en

copyright by
LIEBHERR

A) Machine with CF pendant straps with boom configuration main boom 2821 + luffing jib 1916: Do not install any mid-point suspensions with main boom lengths 77 m (253 ft) and 80 m (262 ft).

7.5.3 Overview of main boom 2821 steel pendant straps

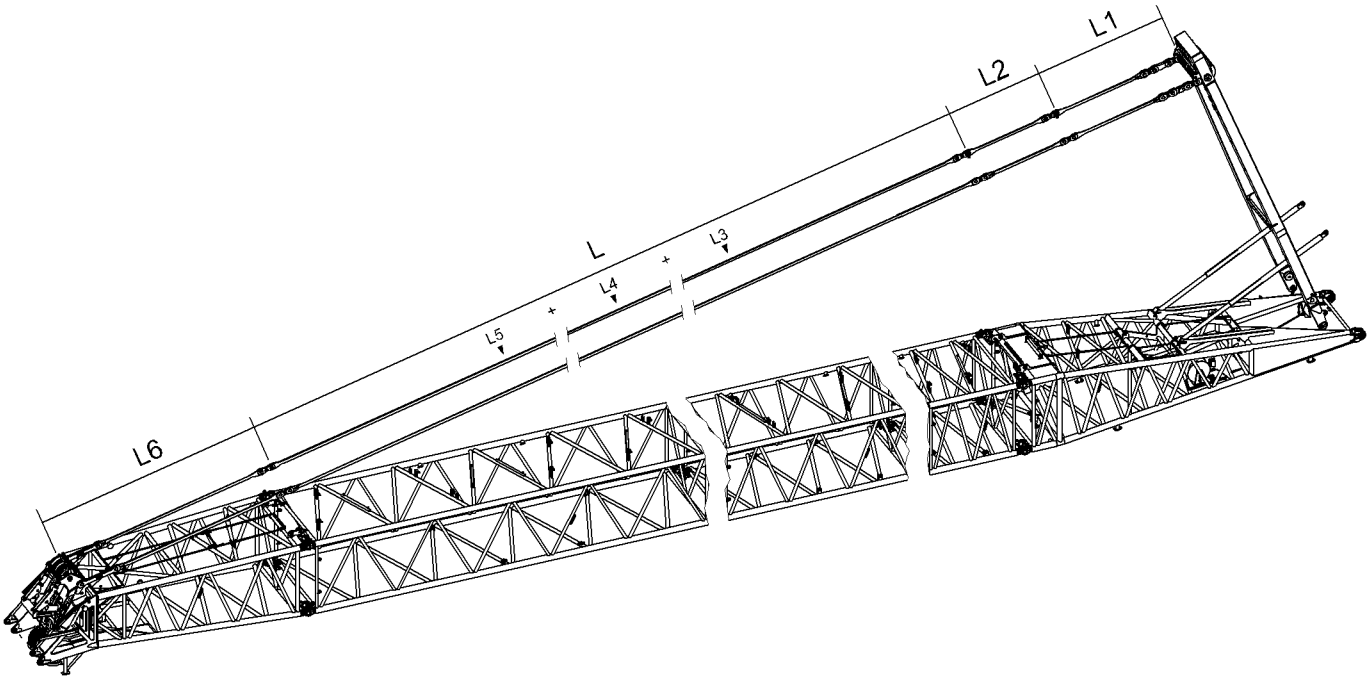

Fig. 3139: Overview of main boom 2821 steel pendant straps

Pendant straps A-frame1 to main boom head 2821

Name			Value
L1	**A-frame1 equalizer** (For more information see: A-frame1 equalizer, page 75)		3730 mm 12‘ 3“ ft-in
L2	**Main boom base section equalizer** (For more information see: Equalizer of main boom base section 2821.30, page 189)		2670 mm 8‘ 9“ ft-in
L	**Main boom pendant straps** consisting of:		Total **L3** + Total **L4** + Total **L5**
	L3	**Main boom pendant strap 3 m (10 ft)** (For more information see: Main boom pendant strap 3 m (10 ft), page 190)	
	L4	**Main boom pendant strap 6 m (20 ft)** (For more information see: Main boom pendant strap 6 m (20 ft), page 192)	
	L5	**Main boom pendant strap 12 m (40 ft)** (For more information see: Main boom pendant strap 12 m (40 ft), page 194)	

LWN/LR.x/V03.01//Auslieferung/2015-06-03/en

copyright by LIEBHERR

Name		Value
L6	**Main boom pendant strap on main boom head 2821** (For more information see: Main boom pendant strap on main boom head 2821.24, page 195)	6300 mm 20‘ 8“ ft-in

Tab. 466: Pendant straps A-frame1 to main boom head 2821

Configuration of main boom pendant straps (L):

Required number of main boom pendant straps 3 m (10 ft) (**L3**) corresponds to number of main boom sections 3 m (10 ft).

Required number of main boom pendant straps 6 m (20 ft) (**L4**) corresponds to number of main boom sections 6 m (20 ft).

Required number of main boom pendant straps 12 m (40 ft) (**L5**) corresponds to number of main boom sections 12 m (40 ft).

Note

▶ For the admissible number of main boom sections 3 m (10 ft), 6 m (20 ft), 12 m (40 ft), refer to the following table: (For more information see: 7.5.1 Configuration of main boom, page 1230)

7.5.4 Overview of main boom 2821 CF pendant straps

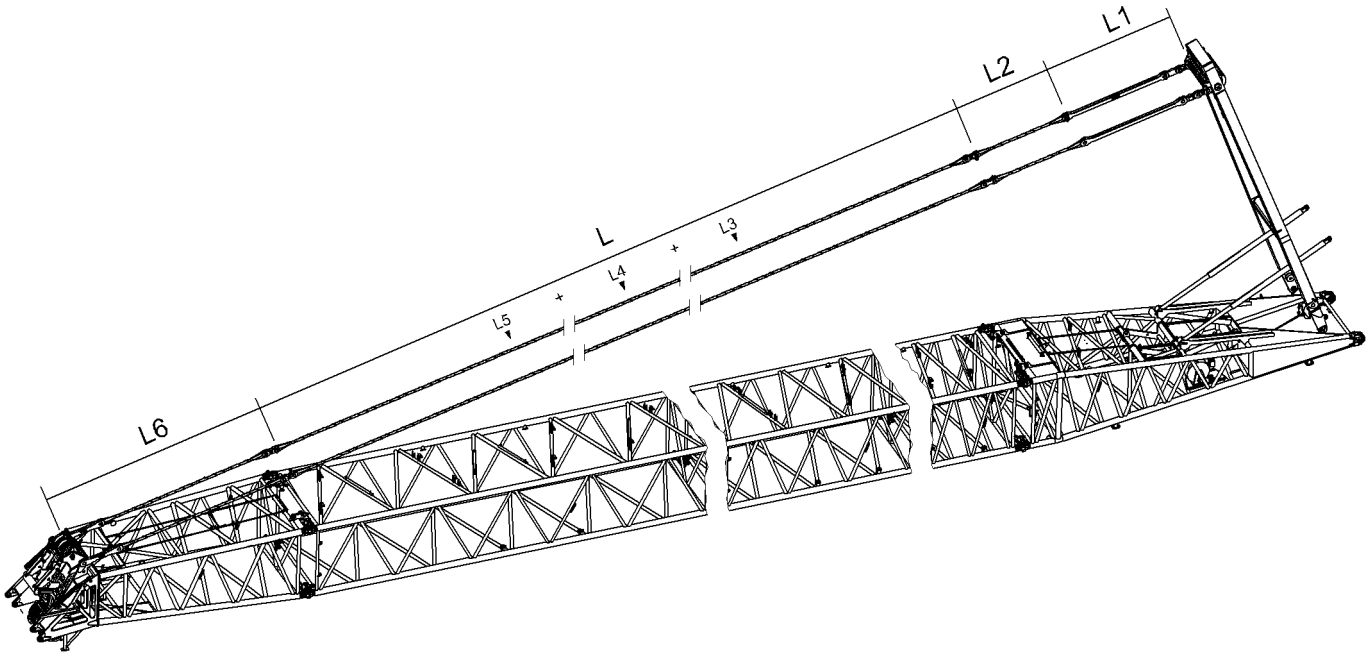

Fig. 3140: Overview of main boom 2821 CF pendant straps

Pendant straps A-frame1 to main boom head 2821

Name		Value
L1	**A-frame1 equalizer** (For more information see: A-frame1 equalizer, page 76)	3700 mm 12‘ 2“ ft-in

LWN/LR.x/V03.01//Auslieferung/2015-06-03/en

copyright by LIEBHERR

Name			Value
L2	**Main boom base section equalizer** (For more information see: Equalizer of main boom base section 2821.30, page 198)		2700 mm 8‘ 10“ ft-in
L	**Main boom pendant straps** consisting of:		Total **L3** + Total **L4** + Total **L5**
	L3	**Main boom pendant strap 3 m (10 ft)** (For more information see: Main boom pendant strap 3 m (10 ft), page 201)	
	L4	**Main boom pendant strap 6 m (20 ft)** (For more information see: Main boom pendant strap 6 m (20 ft), page 204)	
	L5	**Main boom pendant strap 12 m (40 ft)** (For more information see: Main boom pendant strap 12 m (40 ft), page 208)	
L6	**Main boom pendant strap on main boom head 2821** (For more information see: Main boom pendant strap on main boom head 2821.24, page 212)		6300 mm 20‘ 8“ ft-in

Tab. 467: Pendant straps A-frame1 to main boom head 2821

Configuration of main boom pendant straps (L):

Required number of main boom pendant straps 3 m (10 ft) (**L3**) corresponds to number of main boom sections 3 m (10 ft).

Required number of main boom pendant straps 6 m (20 ft) (**L4**) corresponds to number of main boom sections 6 m (20 ft).

Required number of main boom pendant straps 12 m (40 ft) (**L5**) corresponds to number of main boom sections 12 m (40 ft).

Note

▶ For the admissible number of main boom sections 3 m (10 ft), 6 m (20 ft), 12 m (40 ft), refer to the following table: (For more information see: 7.5.1 Configuration of main boom, page 1230)

The main boom pendant straps **(L)** may consist of generation A and generation B main boom pendant straps (For more information see: 1.11.9 CF pendant straps on main boom 2821, page 198) . Mixing is only admissible if the number of generation B main boom pendant straps only differs by at most 1 in the left and the right strand of the main boom pendant straps.

DANGER
Inadmissible mixing of generation A and generation B main boom pendant straps! Structural breakdown.

▶ Ensure that the number of generation B main boom pendant straps differs by at most 1 in the left and the right strand of the main boom pendant straps.

LWN/LR.x/V03.01//Auslieferung/2015-06-03/en

copyright by
LIEBHERR

7.5.5 Reeving diagrams for one rope across main boom head 2821 (load position1)

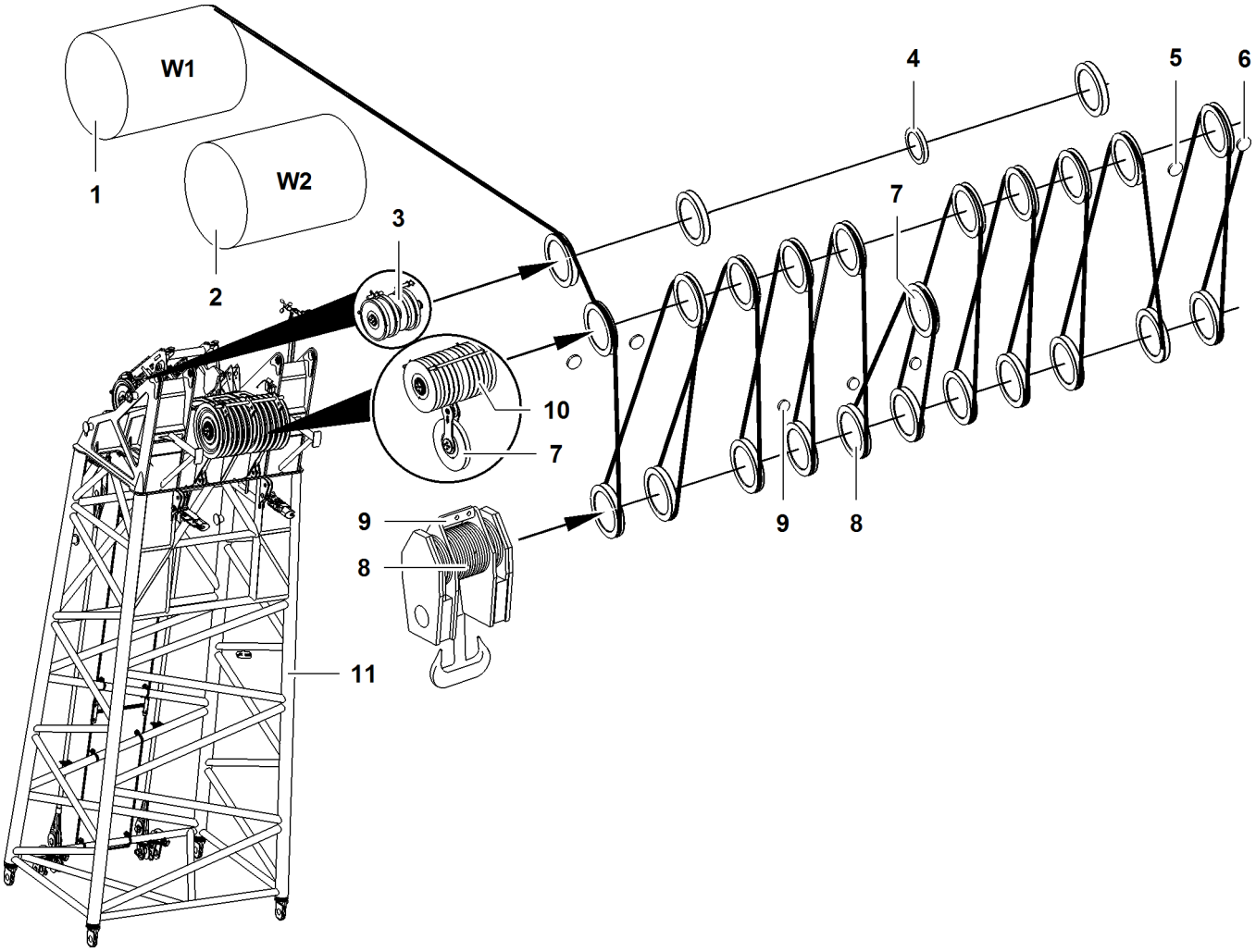

Fig. 3141: Reeving diagrams for one rope across main boom head 2821 (load position1)

1	Winch1	**5**	Inner rope fixing point (2x) of main boom head	**9**	Rope fixing points of pulley block
2	Winch2	**6**	Outer rope fixing point (2x) of main boom head	**10**	Pulley (10x) of main boom head
3	Gantry pulley (3x) of main boom head	**7**	11th pulley of main boom head	**11**	Main boom head
4	Pulley for rope of jib luffing winch	**8**	Pulley set of pulley block		

LWN/LR.x/V03.01//Auslieferung/2015-06-03/en

copyright by LIEBHERR

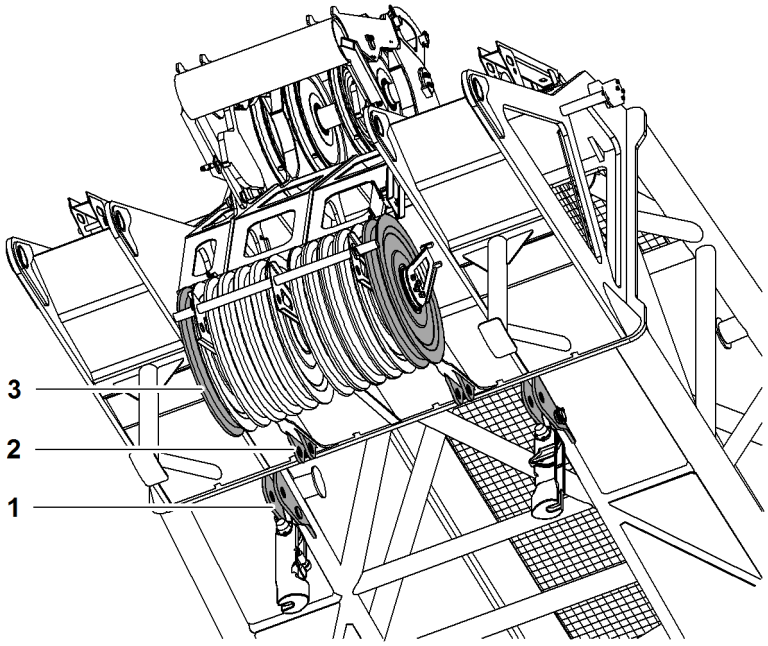

Fig. 3142: Rope fixing points main boom head 2821

1 Outer rope fixing point (2x)
2 Inner rope fixing point (2x)
3 Pulley (2x)

If the first or last pulley **3** on the pulley set of the main boom head is used (reeved), the outer rope fixing point **1** is to be used.

If the first or last pulley **3** on the pulley set of the main boom head is not used (not reeved), the inner rope fixing point **2** is to be used.

DANGER
Incorrect number of reevings!
Structural breakdown, toppling of machine.

▶ Choose the correct number of reevings as per the load chart.

Reeving diagrams for one rope across main boom head 2821 (load position1)	
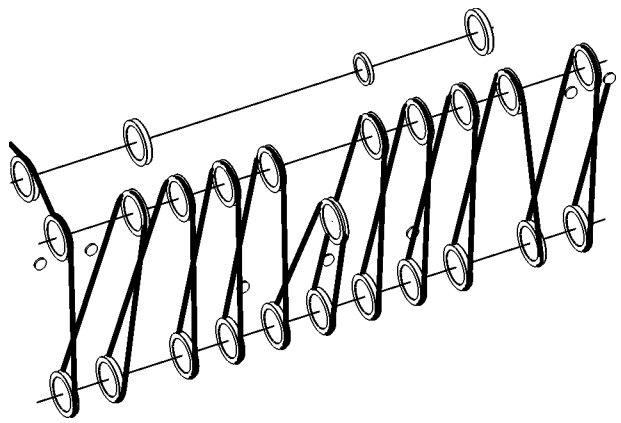 22x	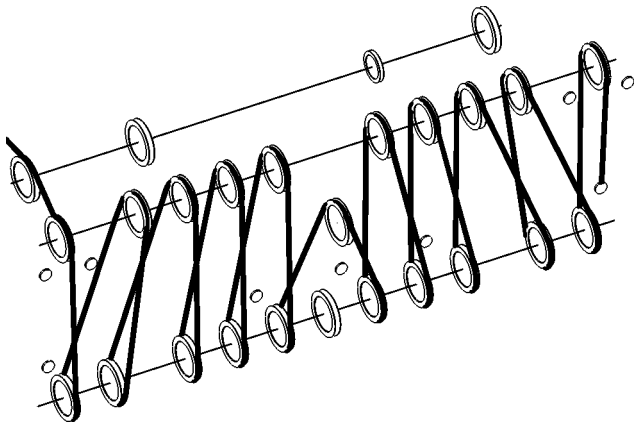 21x

LWN/LR.x/V03.01//Auslieferung/2015-06-03/en

copyright by
LIEBHERR

Reeving diagrams for one rope across main boom head 2821 (load position1)	
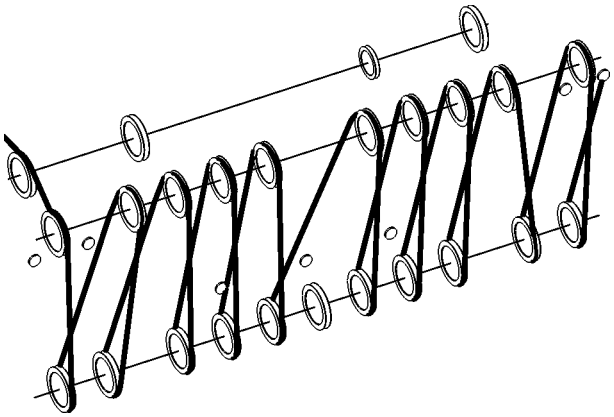 20x	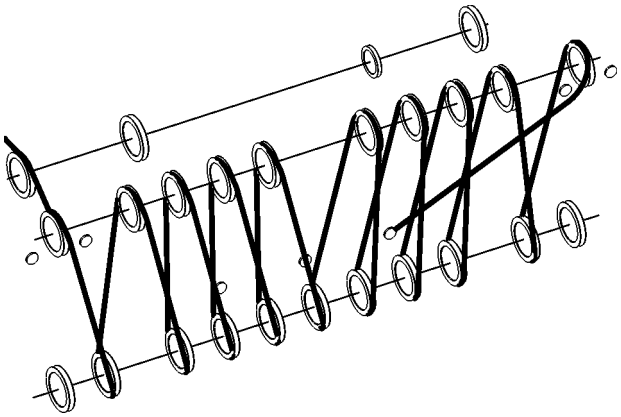 19x
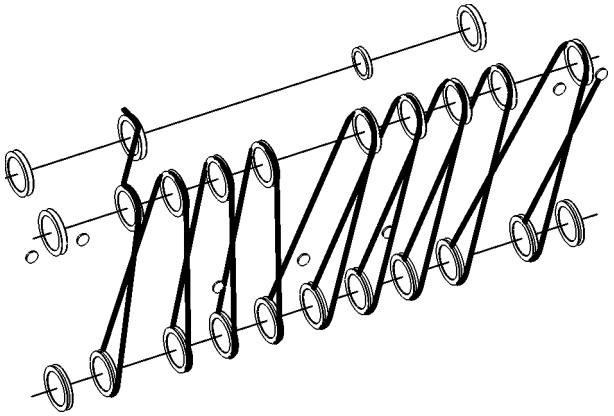 18x	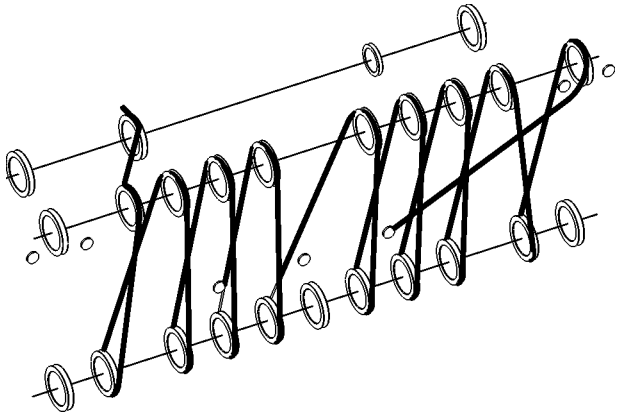 17x
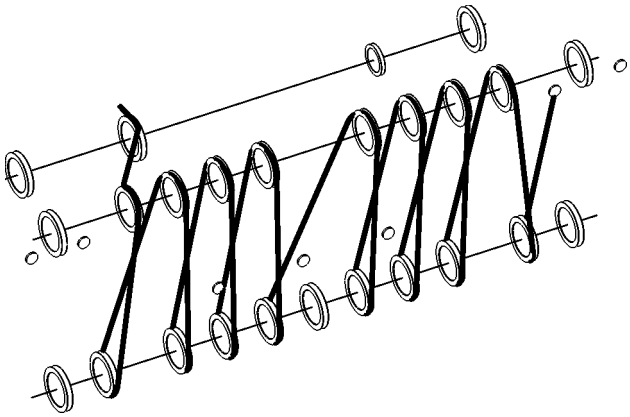 16x	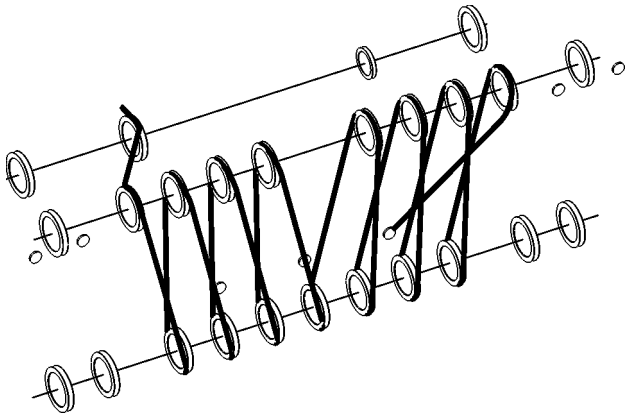 15x

LWN/LR.x/V03.01//Auslieferung/2015-06-03/en

copyright by LIEBHERR

Reeving diagrams for one rope across main boom head 2821 (load position1)	
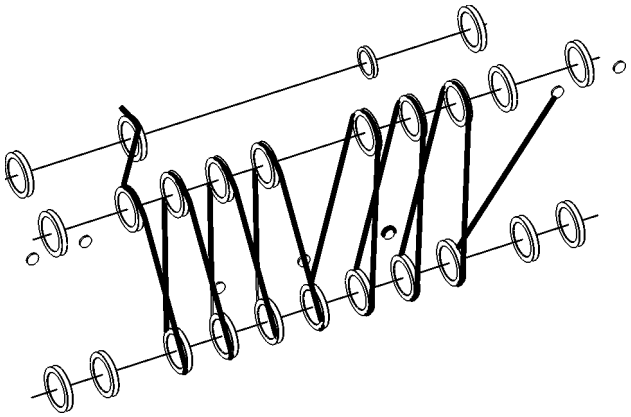 14x	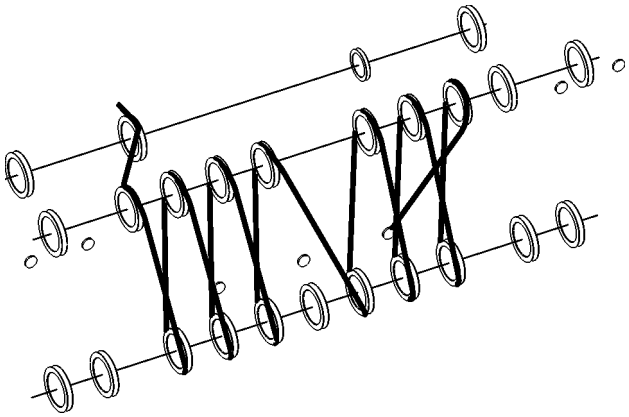 13x
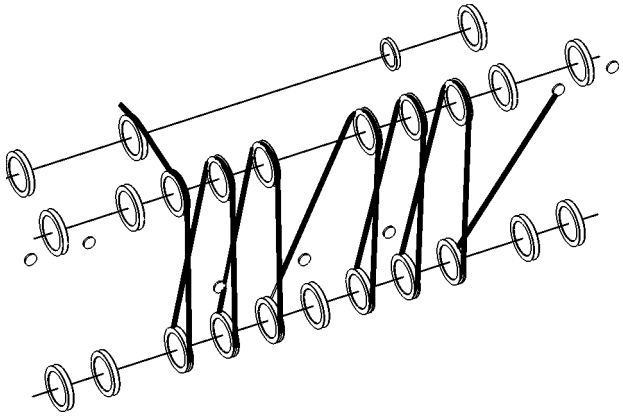 12x	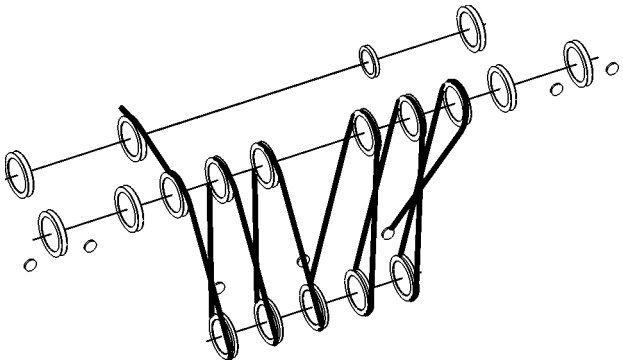 11x
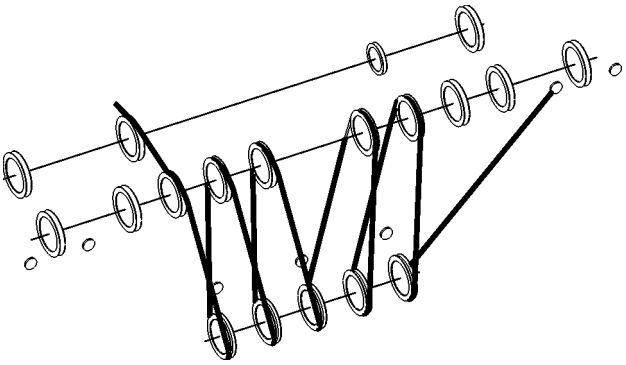 10x	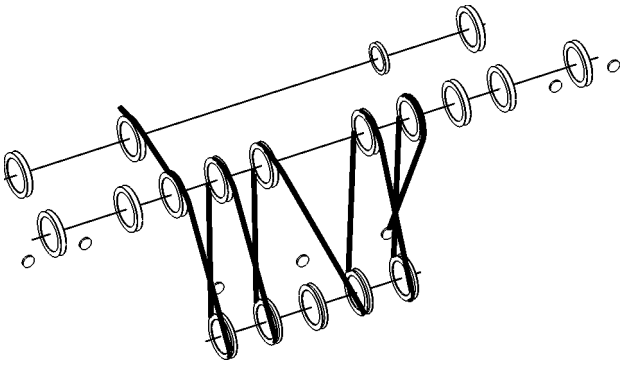 9x
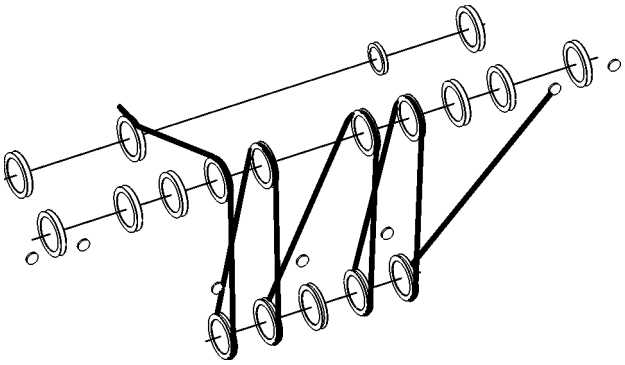 8x	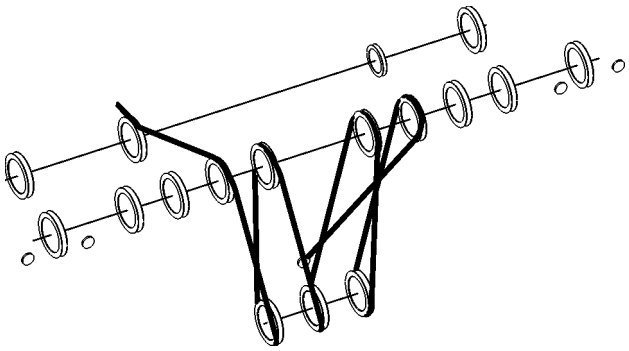 7x

LWN/LR.x/V03.01//Auslieferung/2015-06-03/en

copyright by
LIEBHERR

Reeving diagrams for one rope across main boom head 2821 (load position1)	
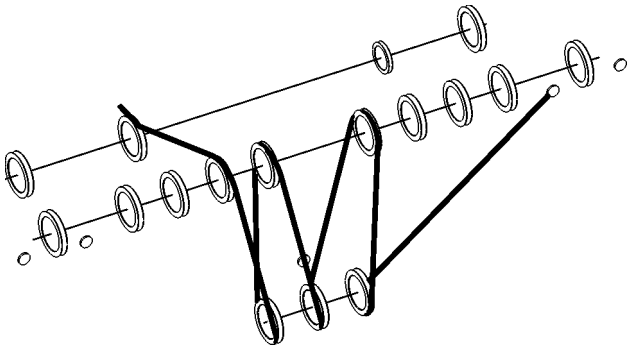 6x	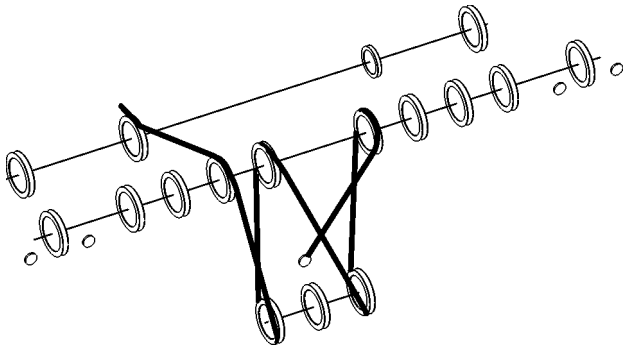 5x
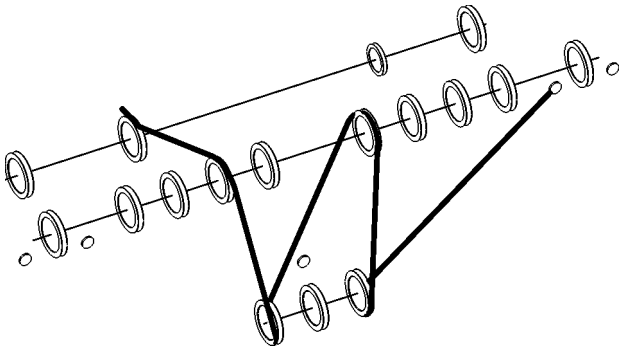 4x	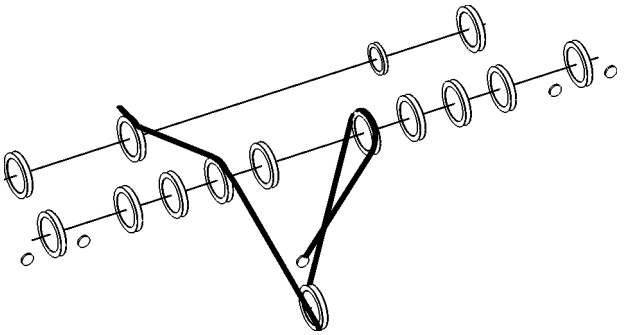 3x
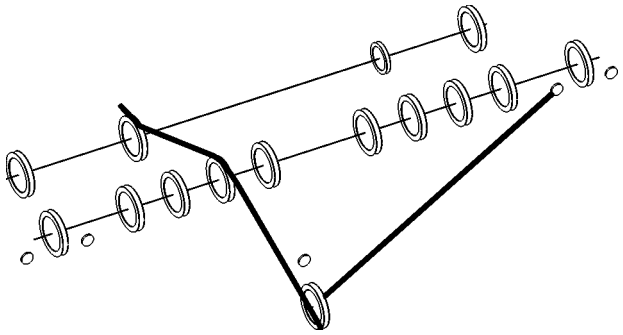 2x	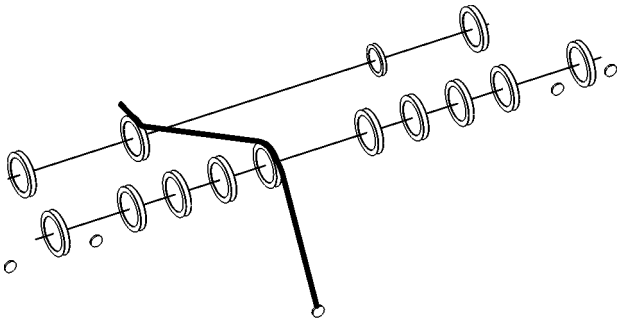 1x

Tab. 468: Reeving diagrams for one rope across main boom head 2821 (load position1)

LWN/LR.x/V03.01//Auslieferung/2015-06-03/en

copyright by LIEBHERR

7.5.6 Reeving diagrams for two ropes across main boom head 2821 (load position1)

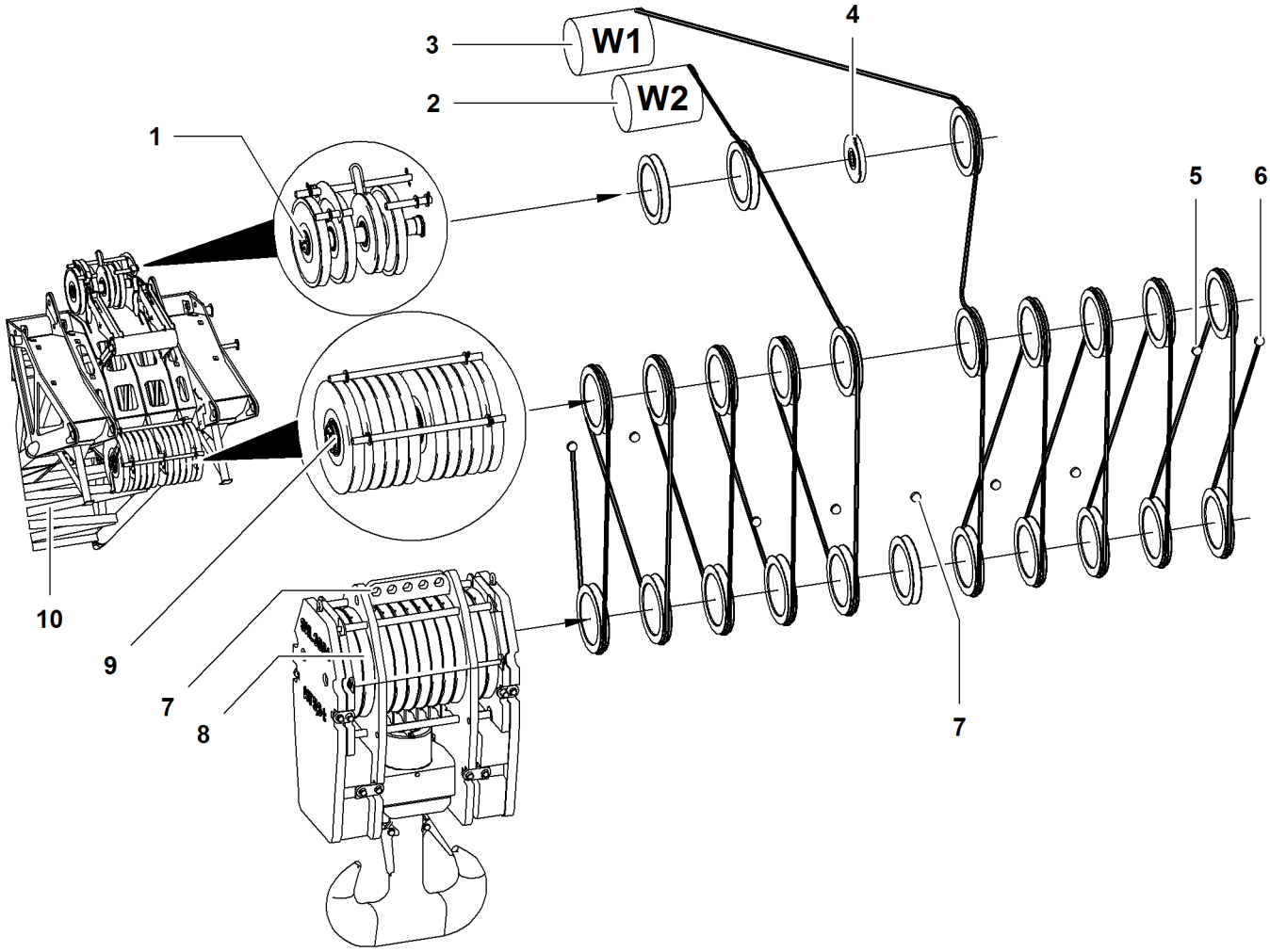

Fig. 3165: Reeving diagrams for two ropes across main boom head 2821 (load position1)

1	Gantry pulley (3x) of main boom head	**5**	Inner rope fixing point (2x) of main boom head	**9**	Pulley (10x) of main boom head
2	Winch2	**6**	Outer rope fixing point (2x) of main boom head	**10**	Main boom head
3	Winch1	**7**	Rope fixing points of pulley block		
4	Pulley for rope of jib luffing winch	**8**	Pulley set of pulley block		

LWN/LR.x/V03.01//Auslieferung/2015-06-03/en

copyright by
LIEBHERR

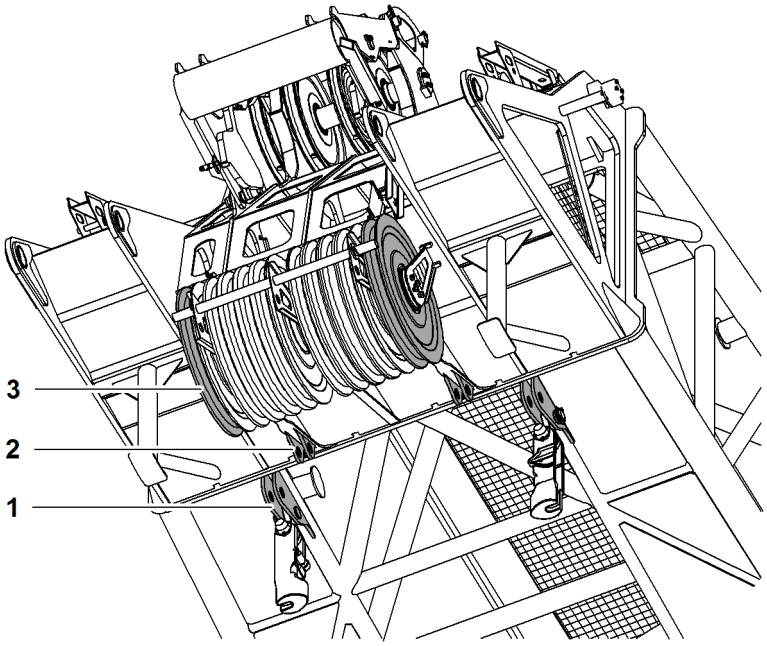

Fig. 3166: Rope fixing points main boom head 2821

1 Outer rope fixing point (2x)
2 Inner rope fixing point (2x)
3 Pulley (2x)

If the first or last pulley **3** on the pulley set of the main boom head is used (reeved), the outer rope fixing point **1** is to be used.

If the first or last pulley **3** on the pulley set of the main boom head is not used (not reeved), the inner rope fixing point **2** is to be used.

DANGER
Inadmissible number of reevings!
Structural breakdown, toppling of machine.

▶ Choose correct number of reevings as indicated in load chart.

Reeving diagrams for two ropes across main boom head 2821 (load position1)

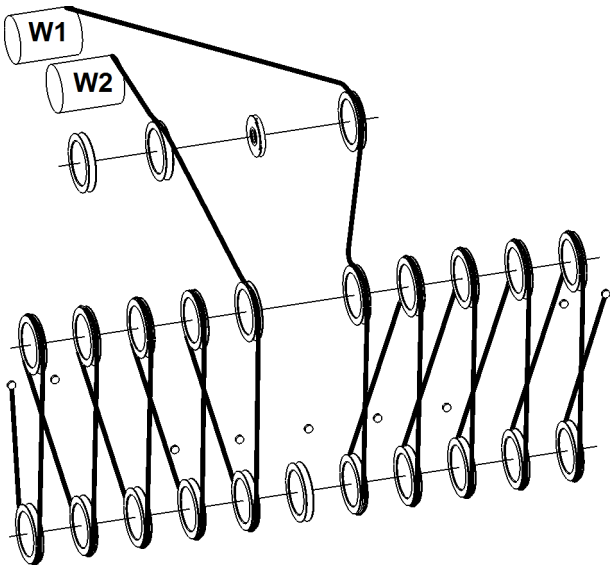

20x

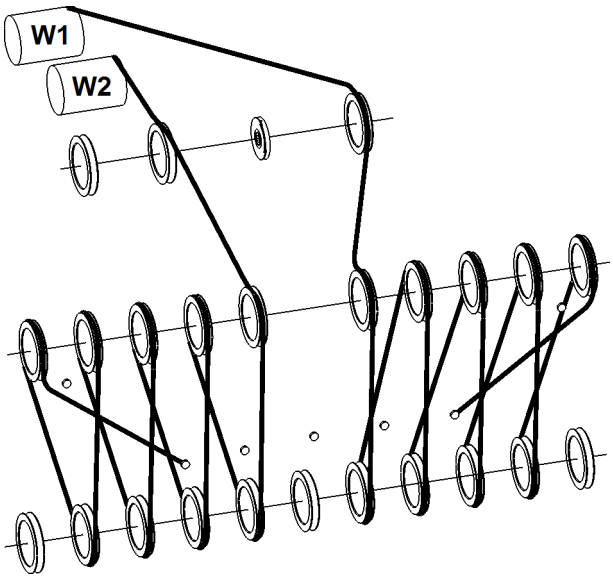

18x

LWN/LR.x/V03.01//Auslieferung/2015-06-03/en

copyright by
LIEBHERR

Reeving diagrams for two ropes across main boom head 2821 (load position1)	
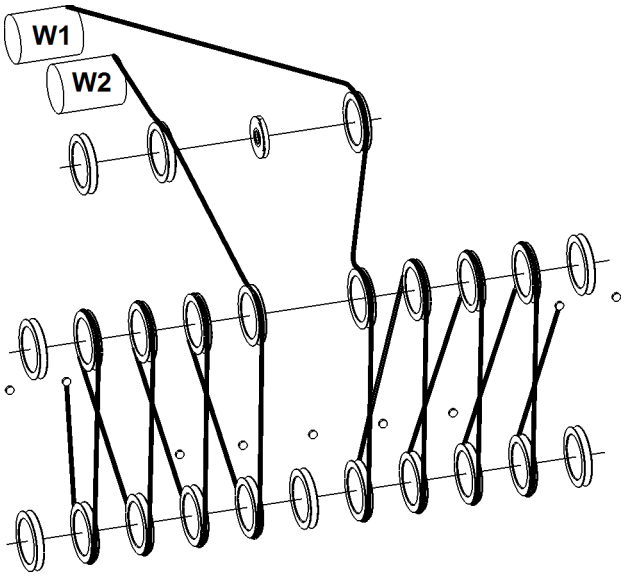 16x	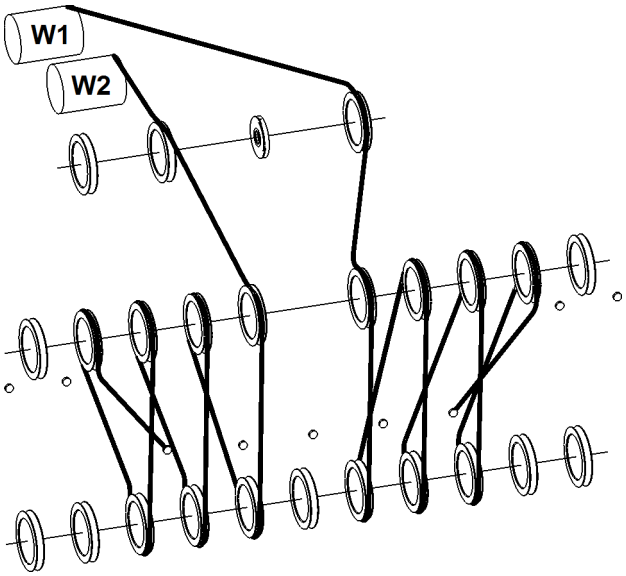 14x
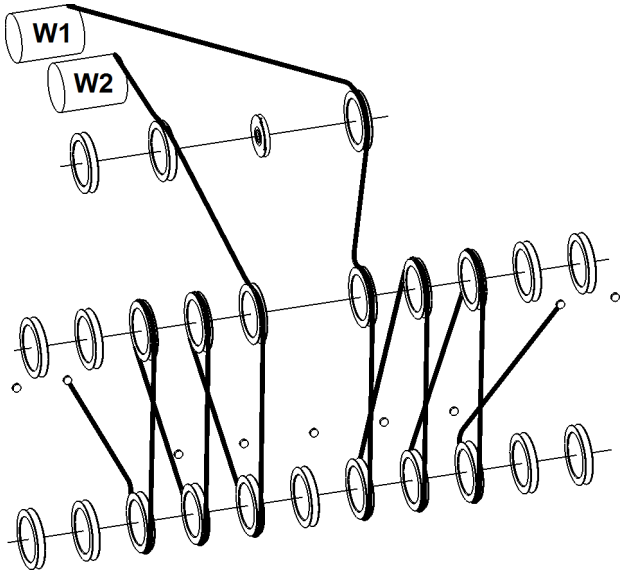 12x	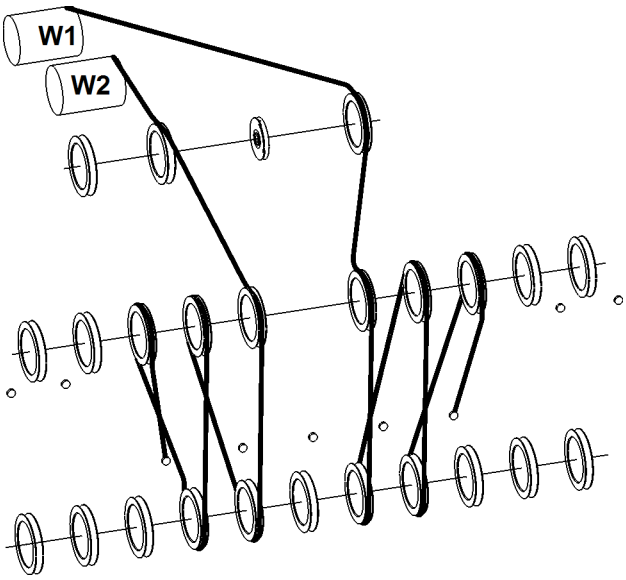 10x

LWN/LR.x/V03.01//Auslieferung/2015-06-03/en

copyright by LIEBHERR

Reeving diagrams for two ropes across main boom head 2821 (load position1)	
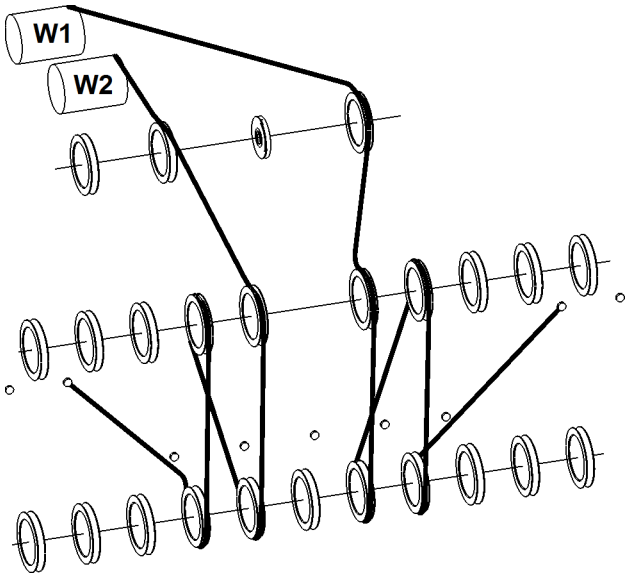 8x	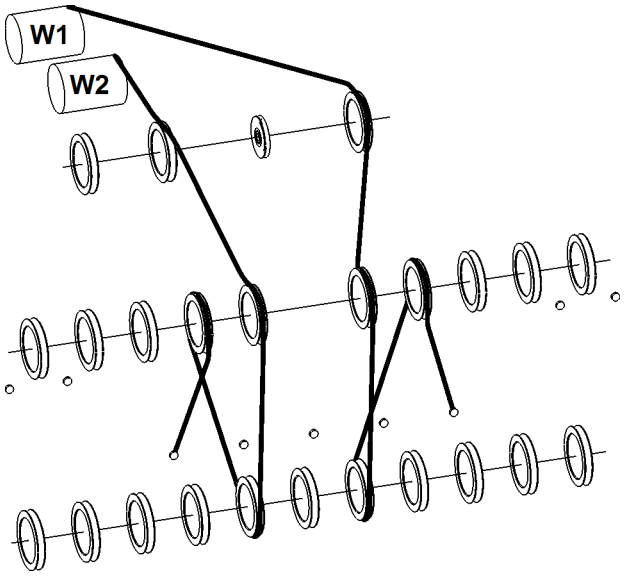 6x
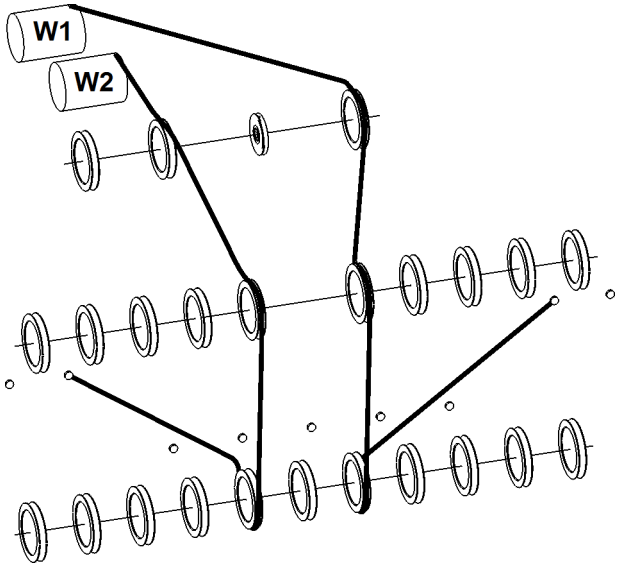 4x	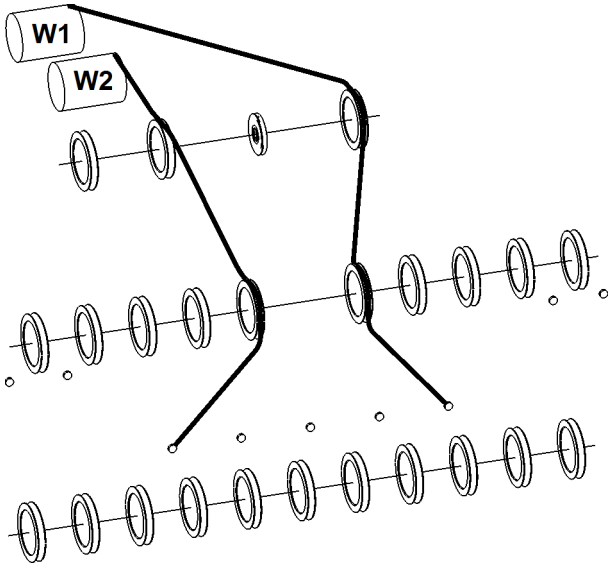 2x

Tab. 469: Reeving diagrams for two ropes across main boom head 2821 (load position1)

LWN/LR.x/V03.01//Auslieferung/2015-06-03/en

copyright by
LIEBHERR

7.5.7 Reeving diagrams for one rope across auxiliary jib (36 t (79300 lb)) on main boom head 2821 (load position1)

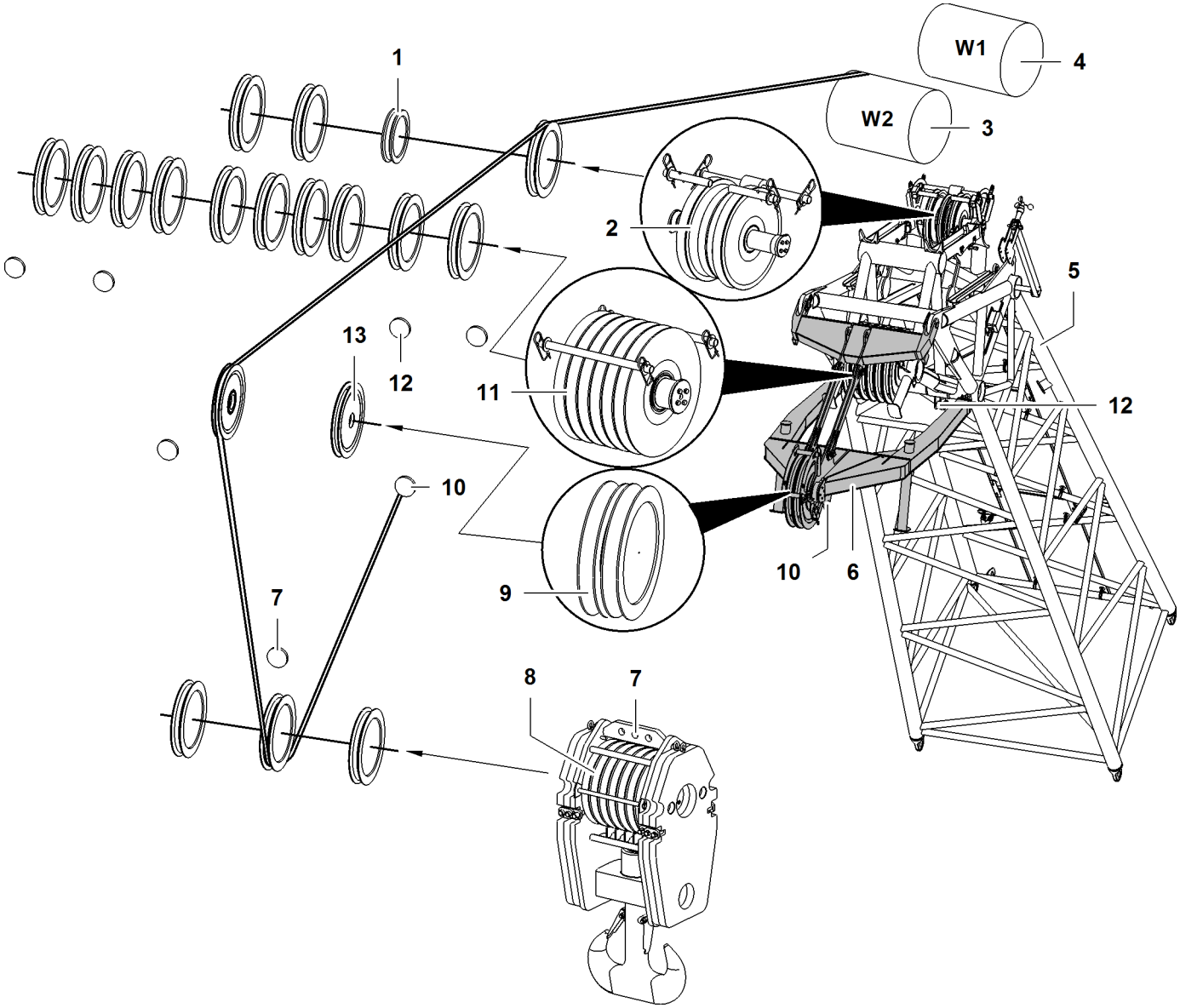

Fig. 3177: Reeving diagrams for one rope across auxiliary jib (36 t (79300 lb)) on main boom head 2821 (load position1)

1 Pulley for rope of jib luffing winch
2 Gantry pulley (3x) of main boom head
3 Winch2
4 Winch1
5 Main boom head
6 Auxiliary jib (36 t (79300 lb))
7 Rope fixing points of pulley block
8 Pulley set of pulley block
9 Pulley of auxiliary jib (36 t (79300 lb))
10 Rope fixing point of auxiliary jib (36 t (79300 lb))
11 Pulley (10x) of main boom head
12 Rope fixing point (4x) of main boom head
13 Second pulley* for triple reeving of auxiliary jib (36 t (79300 lb))

LWN/LR.x/V03.01//Auslieferung/2015-06-03/en

copyright by LIEBHERR

DANGER
Inadmissible number of reevings!
Structural breakdown, toppling of machine.

▶ Choose correct number of reevings as indicated in load chart.

Reeving diagrams for one rope across auxiliary jib (36 t (79300 lb)) on main boom head 2821 (load position1)	
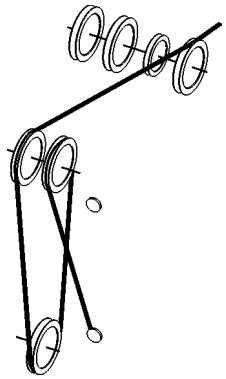 3x	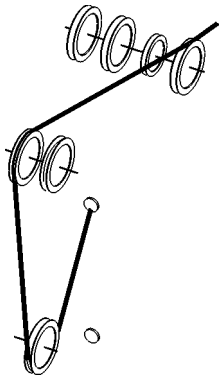 2x
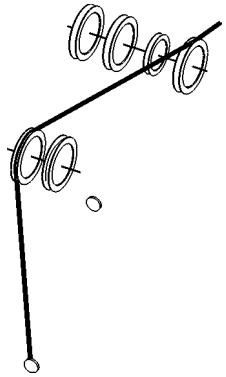 1x	

Tab. 470: Reeving diagrams for one rope across auxiliary jib (36 t (79300 lb)) on main boom head 2821 (load position1)

LWN/LR.x/V03.01//Auslieferung/2015-06-03/en

copyright by
LIEBHERR

7.5.8 Reeving diagrams for two ropes across auxiliary jib (36 t (79300 lb)) and main boom head 2821 (load position 1)

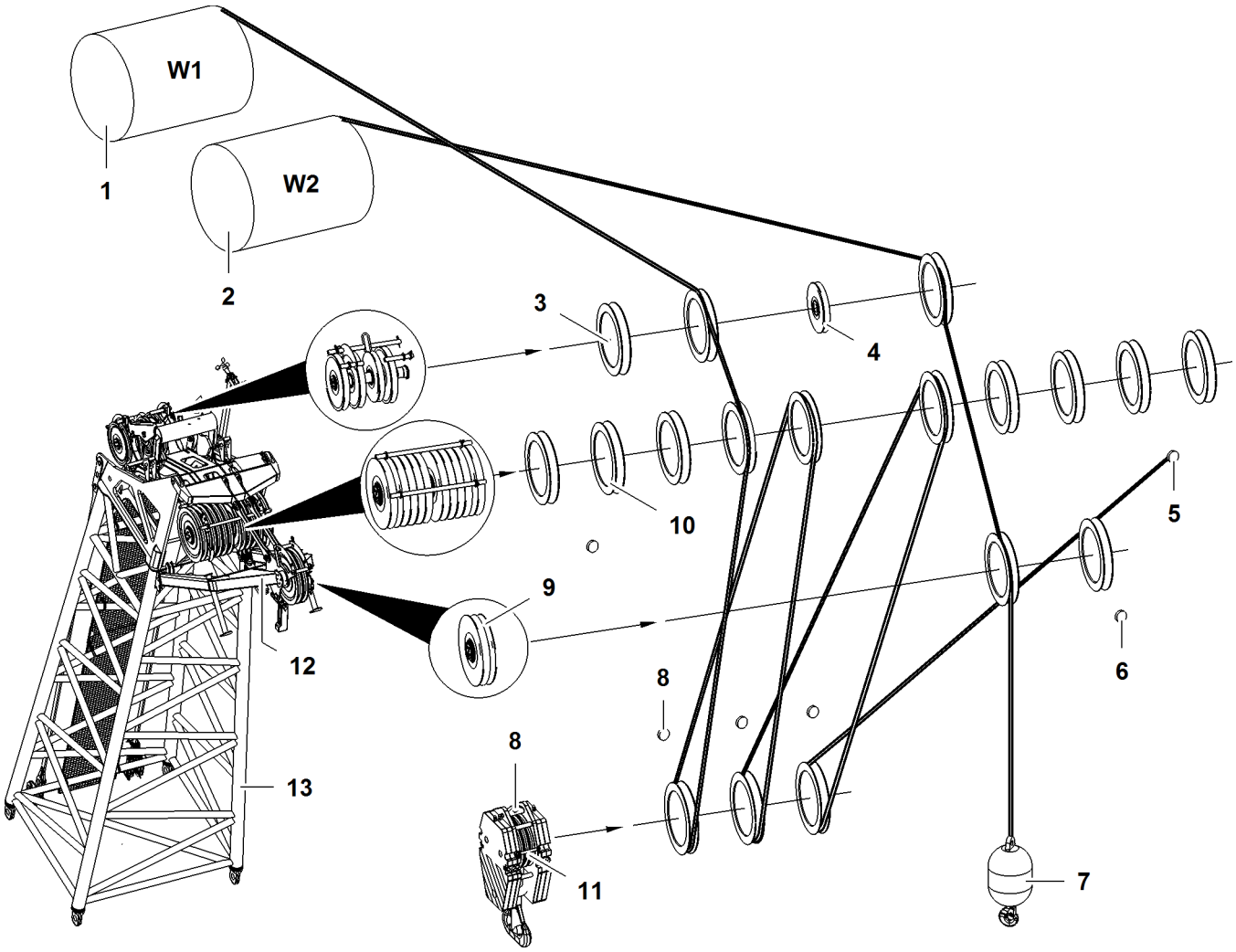

Fig. 3181: Reeving diagrams for two ropes across auxiliary jib (36 t (79300 lb)) and main boom head 2821 (load position 1)

1	Winch1	**6**	Rope fixing point of auxiliary jib (36 t (79300 lb))	**11**	Pulley set of pulley block
2	Winch2	**7**	Hook	**12**	Auxiliary jib (36 t (79300 lb))
3	Gantry pulley (3x) of main boom head	**8**	Rope fixing points of pulley block	**13**	Main boom head
4	Pulley for rope of jib luffing winch	**9**	Second pulley* for triple reeving of auxiliary jib (36 t (79300 lb))		
5	Rope fixing point (4x) of main boom head	**10**	Pulley (10x) of main boom head		

DANGER
Inadmissible number of reevings!
Structural breakdown, toppling of machine.

▶ Choose correct number of reevings as indicated in load chart.

LWN/LR.x/V03.01//Auslieferung/2015-06-03/en

copyright by LIEBHERR

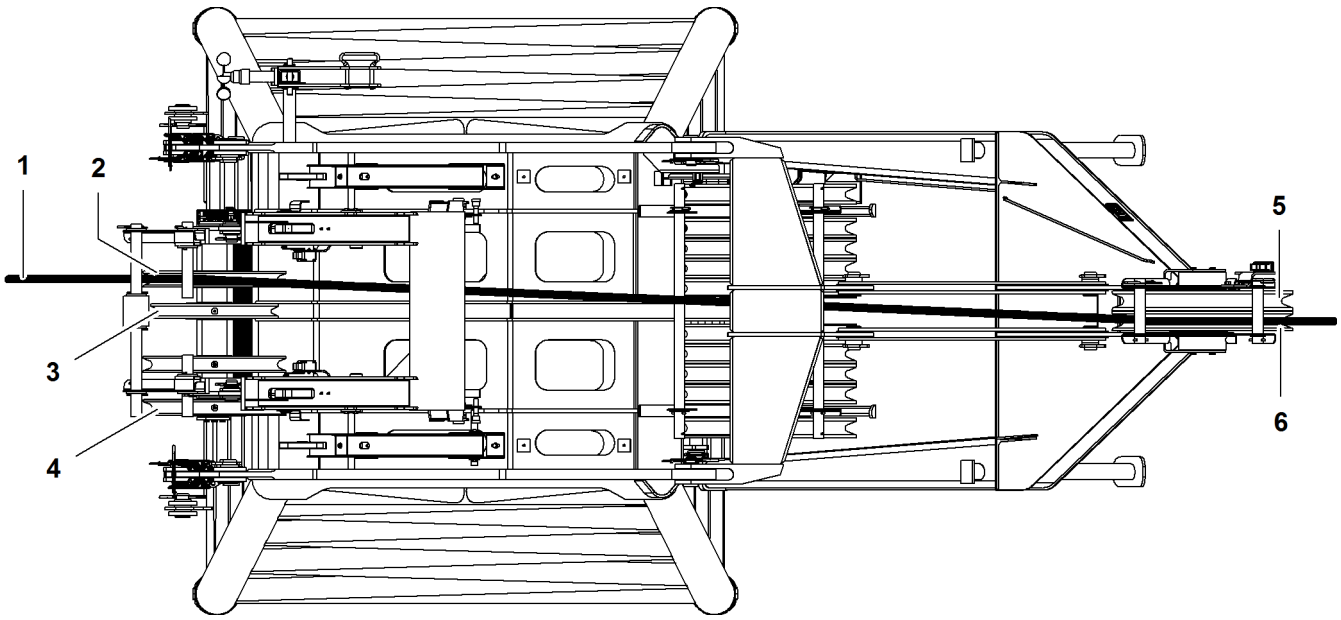

Fig. 3182: Rope run of auxiliary jib (36 t (79300 lb)) (illustration of principle)

1	Winch2 rope	**3**	Pulley for rope of jib luffing winch	**5**	Second pulley* for triple reeving of auxiliary jib (36 t (79300 lb))
2	Left gantry pulley of main boom head	**4**	Right gantry pulley (2x) of main boom head	**6**	Pulley of auxiliary jib

The rope of winch2 **1** runs from the left gantry pulley **2** to the auxiliary jib pulley **6**.

The rope of winch1 runs from one of the right gantry pulleys **4** to the required pulley on the main boom head.

7.5.9 Reeving diagram - jib luffing winch as auxiliary winch

DANGER
Incorrect number of reevings!
Structural breakdown, toppling of machine.

▶ Choose the correct number of reevings as per the load chart.

LWN/LR.x/V03.01//Auslieferung/2015-06-03/en

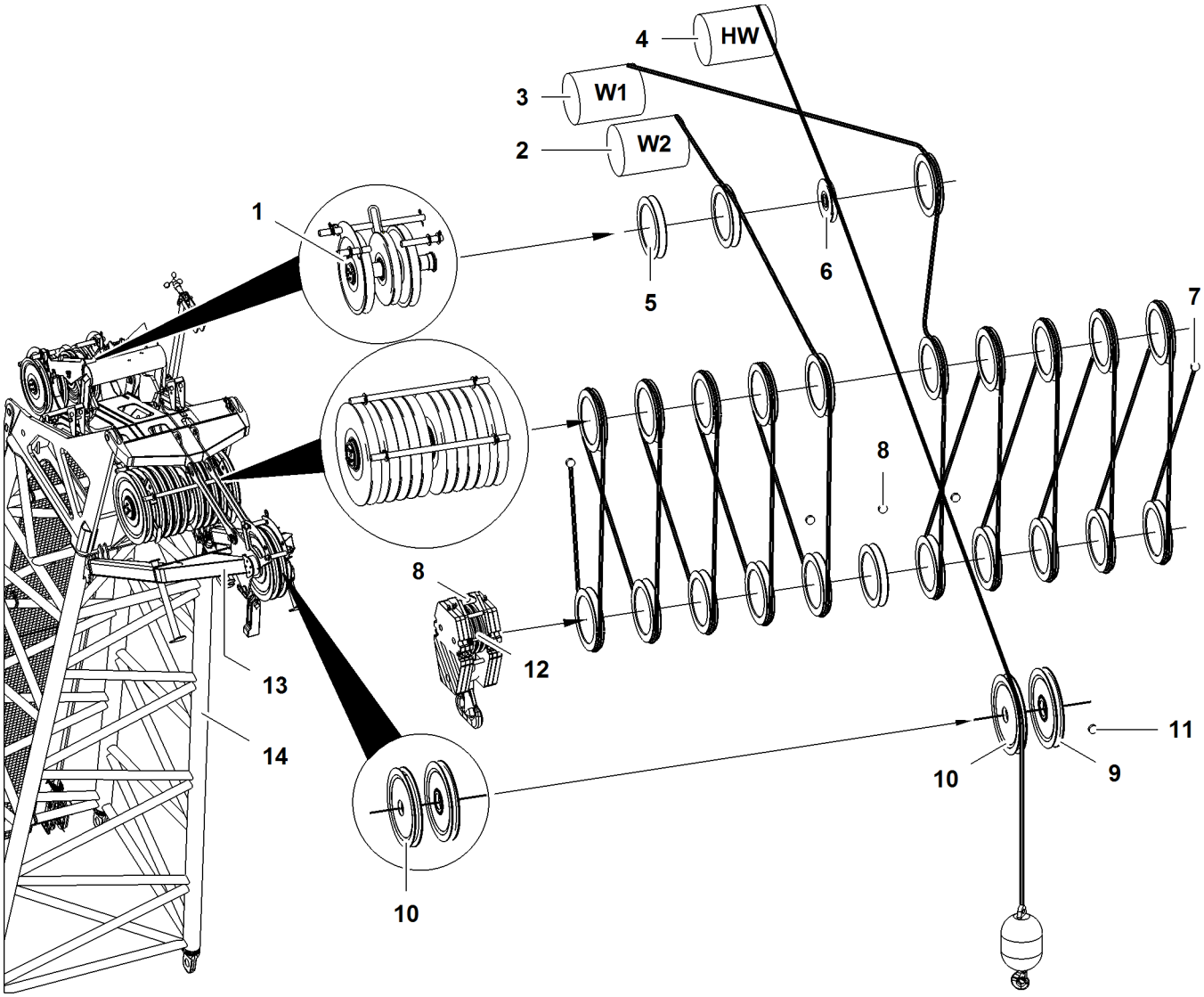

Fig. 3183: Reeving diagram - jib luffing winch as auxiliary winch (illustration of principle)

1	Gantry pulley (2x) of main boom head	**6**	Pulley for rope of jib luffing winch	**11**	Rope fixing point of auxiliary jib (36 t (79300 lb))
2	Winch2	**7**	Rope fixing points of main boom head	**12**	Pulley set of pulley block
3	Winch1	**8**	Rope fixing points of pulley block	**13**	Auxiliary jib (36 t (79300 lb))
4	Jib luffing winch as auxiliary winch*	**9**	Second pulley* for triple reeving of auxiliary jib (36 t (79300 lb))	**14**	Main boom head
5	Gantry pulley (only with LR 1004 und LR 1006)	**10**	Pulley of auxiliary jib (36 t (79300 lb))		

LWN/LR.x/V03.01//Auslieferung/2015-06-03/en

copyright by
LIEBHERR

7.6 Assembly of main boom without derrick equipment*

Make sure the following prerequisites are met:
- ❑ Assembly functions are activated.
- ❑ Machine is ready for use as assembly crane, or an assist crane is available.
- ❑ Work plans were drawn up.
- ❑ The length and the order of the main boom sections are known.
- ❑ The installation positions of the rope guide are known.
- ❑ Installation positions of the mid-point suspensions are known.
- ❑ Required accessories are available.

7.6.1 Notes

The illustrations have been simplified or schematically represented for reasons of uniformity and represent the principles of assembly. They do not provide a detailed representation of the components.

7.6.2 Programming the setup

DANGER
Unacceptable setup!

▶ Only program a setup on the machine that is in accordance with the load chart.

▶ Programming the setup on the machine (For more information see: 4.13 Programming the setup, page 870) .

7.6.3 Unloading and positioning the main boom section

DANGER
Slewing of uppercarriage with rear counterweight attached not permitted!
Machine toppling over.

▶ Slew the uppercarriage according to the table (For more information see: Lifting and pinning the rear counterweight, page 1224) exclusively.

DANGER
Incorrect or defect parts or components!
Structural breakdown.

▶ Only use original Liebherr parts and original Liebherr components in perfect condition.

DANGER
Improperly assembled boom configuration!
Structural breakdown.

▶ Ensure that the assembled boom configuration is compatible with the programmed setup.

LWN/LR.x/V03.01//Auslieferung/2015-06-03/en

copyright by LIEBHERR

DANGER
Incorrect arrangement of boom sections!
Structural breakdown.

- Assemble the main boom according to the relevant system requirements.
- A boom section of 6 m (20 ft) cannot be replaced by two boom sections of 3 m (10 ft).
- A boom section of 12 m (40 ft) cannot be replaced by two boom sections of 6 m (20 ft).
- Make sure that with model LR 1300 only main boom sections with the system dimensions 2821.24 are installed (For more information see: 1.9 Distinguishing features main boom sections LR 1300 and LR 1300 SX, page 157) .
- Make sure that with model LR 1300 SX only main boom sections with the system dimensions 2821.30 are installed (For more information see: 1.9 Distinguishing features main boom sections LR 1300 and LR 1300 SX, page 157) .

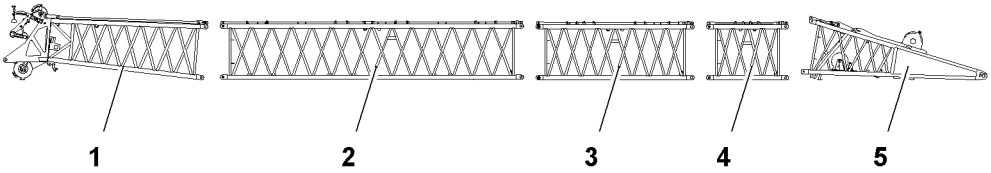

Fig. 3184: Unloading and positioning the main boom components

1	Boom head section	**4**	Boom section 3 m (10 ft)
2	Boom section 12 m (40 ft)	**5**	Boom base section
3	Boom section 6 m (20 ft)		

- Direct transport vehicles with boom components.
- Lash main boom sections by attaching lifting equipment to the lifting points.
- Unload main boom sections onto wooden blocks using the basic machine or assist crane and position according to the relevant system instructions.

7.6.4 Assembling the ladder* for the boom

CAUTION
Unauthorized use of ladder!
Fall from ladder.

- Only use the ladder with boom sections on which the required ladder angle of 75° to 80° can be observed.

CAUTION
The ladder must not be placed under an impermissible dynamic load!
Fall from ladder, break of ladder.

- The ladder must only be used for general assembly work on pendant straps and pin connection points on the boom sections.
- Do not stand on the ladder to knock in the boom section pins.
- The ladder must be checked for damage and cracks before it is fitted and before it is used.

LWN/LR.x/V03.01//Auslieferung/2015-06-03/en

copyright by
LIEBHERR

CAUTION
Take great care if walking on boom sections!
risk of falling from boom section.

- ▶ Only ever walk on boom sections if boom catwalks are fitted.
- ▶ A fall arrest system must be used when working on boom sections to prevent falling.

CAUTION
Slipping of the ladder!
Fall from ladder.

- ▶ Secure ladder against sliding.

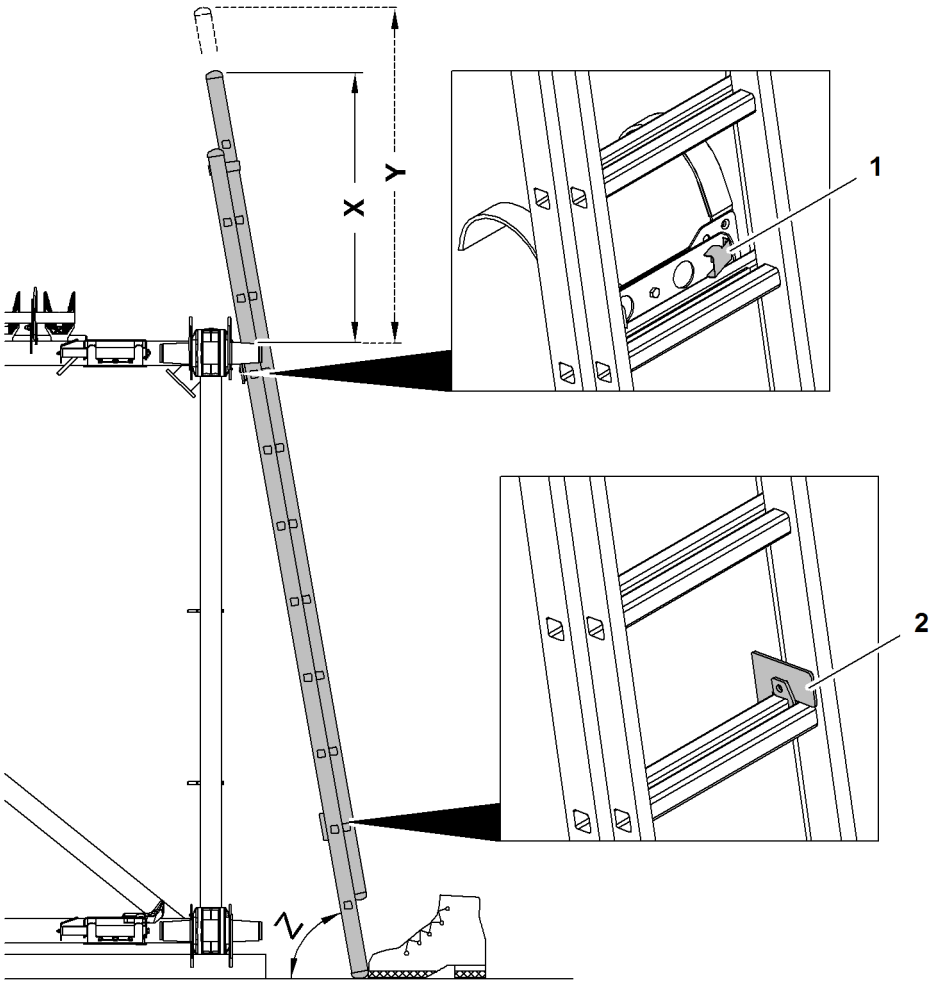

Fig. 3185: Assembling the ladder for the boom

1	Top locking element	**Y**	Maximum height
2	Bottom locking element	**Z**	Ladder angle
X	Minimum height		

The ladder angle **Z** must remain between 75° and 80°.

The minimum height **X** must be at least 1000 mm (3‘ 3“ ft-in).

If the maximum height **Y** is exceeded, the ladder topples.

- ▶ Insert ladder support at belt pipe of boom section.

LWN/LR.x/V03.01//Auslieferung/2015-06-03/en

CAUTION
Improperly extended ladder!
Fall from ladder.

- ▶ Observe slant angle **Z**.
- ▶ Observe minimum height **X**.
- ▶ Do not exceed maximum height **Y**.

- ▶ Extend extendable part of the ladder until minimum height **X** is exceeded.

CAUTION
Unsecured ladder!
Fall from ladder.

- ▶ Secure ladder against sliding.
- ▶ Ensure that locking elements engage.

- ▶ Check top locking element.
- ▶ Check bottom locking element.
  - ▷ Ladder for boom is installed:

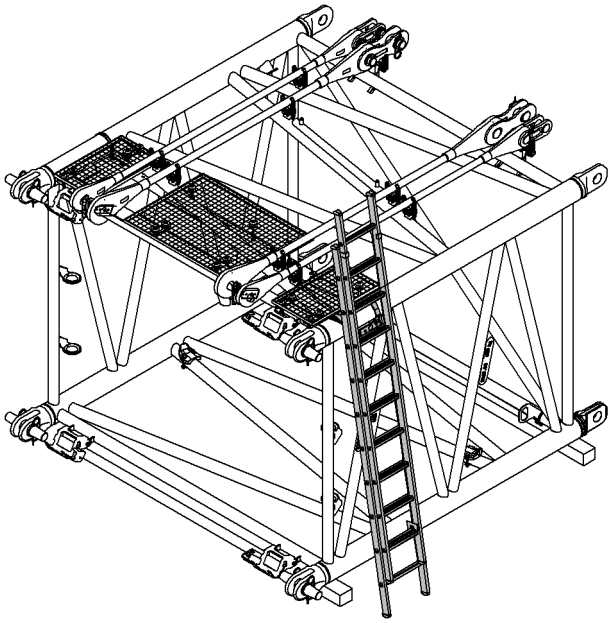

Fig. 3186: Ladder for boom is installed

7.6.5 Bolting the boom head section to the boom sections

WARNING
Never stand in the inside of the main boom sections during assembly!
Serious injury.

- ▶ Never go inside the boom sections.
- ▶ Drive in double-taper pins from the outside exclusively.

LWN/LR.x/V03.01//Auslieferung/2015-06-03/en

copyright by
LIEBHERR

Note

If a fixed jib (excluding fixed jib 1507) is going to be added:

▶ Bolt the boom head section and boom section to the upper pin connection points using double-taper pins from the A-frame 2 equalizer (jib backstay strap) of the fixed jib.

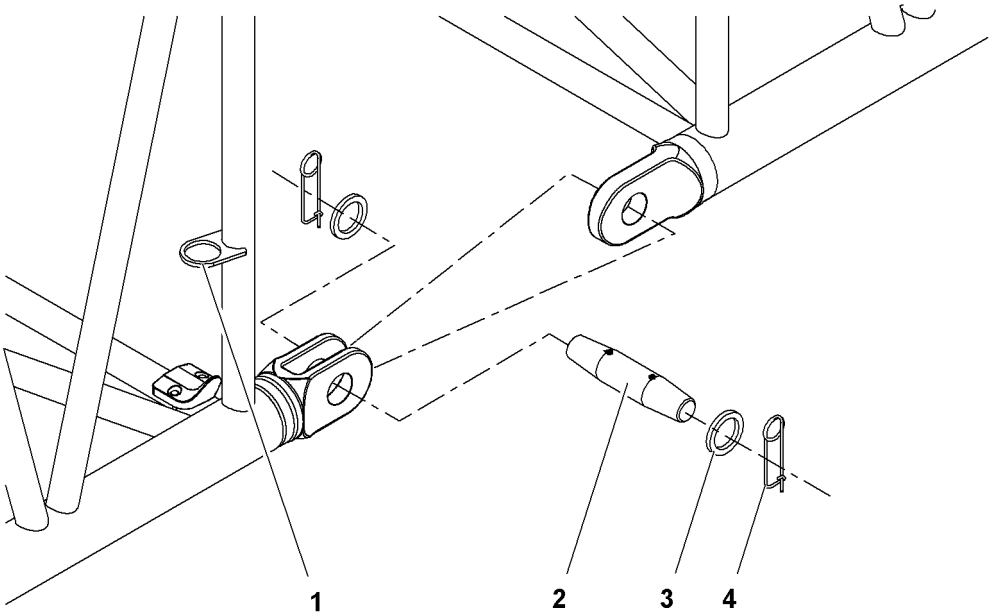

Fig. 3187: Bolting the main boom

1	Transport bracket (4x) for double-taper pins	**3**	Washer (8x)
2	Double-taper pin (4x)	**4**	Safety pin (8x)

▶ Remove the double-taper pins **2** from the transport brackets **1**.

Note

Liebherr recommends:

▶ To make assembly and disassembly easier, grease the double-taper pin.

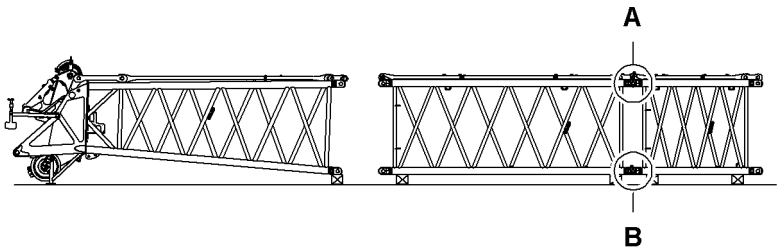

Fig. 3188: Bolting the main boom sections

A	Upper pin connection point (2x)	**B**	Lower pin connection point (2x)

▶ Bolt all boom sections to one another on pin connection points **A + B**.

▶ Secure the double-taper pins with washers and safety pins.

LWN/LR.x/V03.01//Auslieferung/2015-06-03/en

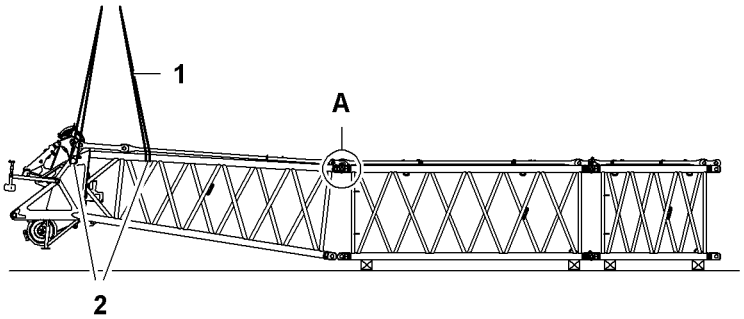

Fig. 3189: Bolting the boom head section to the boom sections at the top

1 Round sling (4x)
2 Lifting point (4x)
A Upper pin connection point (2x)

▶ Attach the boom head section on the lifting points **2**.

▶ Lift the boom head section to the boom section until the upper pin connection points **A** match.

▶ Bolting the boom head section to the boom sections on the upper pin connection points **A**.

▶ Secure the double-taper pins with washers and safety pins.

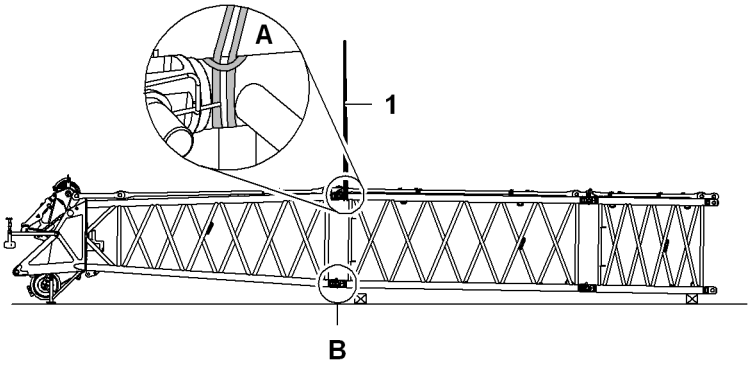

Fig. 3190: Bolting the boom head section to the boom sections at the bottom

1 Round sling (2x)
A Chord pipe (2x)
B Lower pin connection point (2x)

▶ Attach boom section to chord pipes **A**.

▶ Lift the boom section until the lower pin connection points **B** match.

▶ Bolting the boom head section to the boom sections on the lower pin connection points **B**.

▶ Secure the double-taper pins with washers and safety pins.

LWN/LR.x/V03.01//Auslieferung/2015-06-03/en

copyright by
LIEBHERR

7.6.6 Connecting and checking boom fall arrest*

WARNING
Improper assembly of the boom fall arrest*!
Risk of falling off the boom.

- ▶ Ensure that the boom fall arrest* is in impeccable condition.
- ▶ Ensure that the boom fall arrest* is connected and secured between boom sections according to the specifications.

- ▶ Connect and check boom fall arrest* in accordance with additional documentationLIE-TAURUS.

7.6.7 fit the rope guide

NOTICE
Incorrect assembly of the rope guide!
Risk of damage to the rope.

- ▶ Fit rope guide according to relevant system instructions.

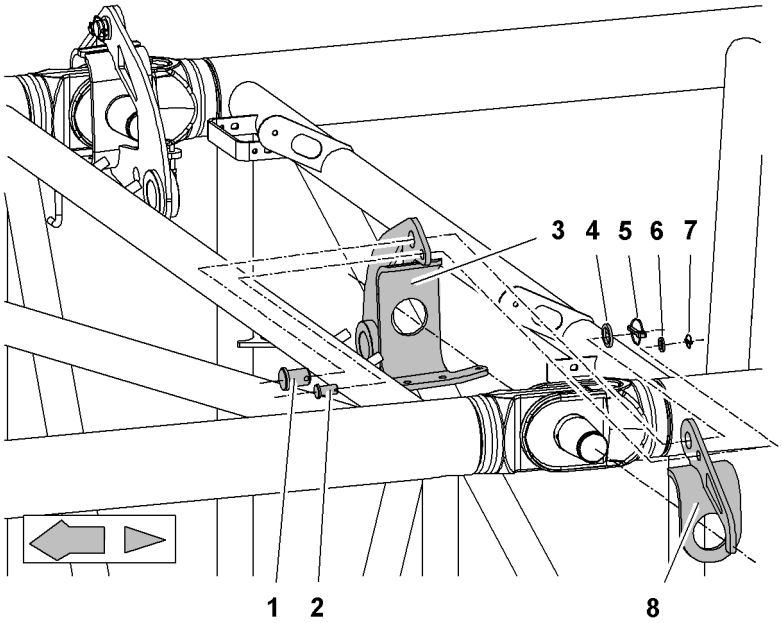

Fig. 3191: Fitting the rope guide forks

1	Pin	**5**	Linch pin
2	Pin	**6**	Washer
3	Inner section of fork	**7**	Linch pin
4	Washer	**8**	Outer section of fork

- ▶ Remove the safety pins and washers from both sides of the boom pin connection double-taper pin and stow away.
- ▶ Mount the inner and outer sections of the fork **3 + 8** on the double-taper pin.
- ▶ Pin the inner and outer sections of the **3 + 8** fork.
- ▶ Secure pin **1 + 2** with washers **4 + 6** and linch pins **5 + 7**.

LWN/LR.x/V03.01//Auslieferung/2015-06-03/en

copyright by LIEBHERR

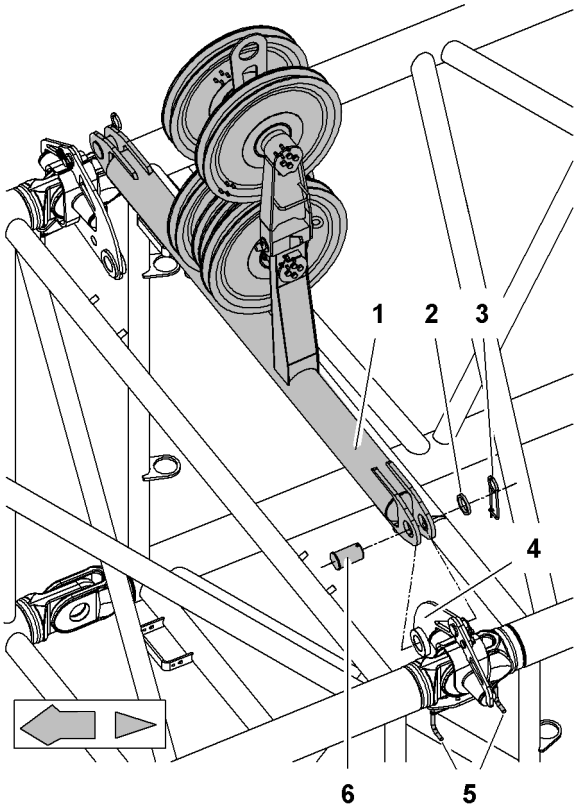

Fig. 3192: Attach rope guide

1	Rope guide	**4**	Fork
2	Washer	**5**	Screw (2x)
3	Safety pin	**6**	Pin

▶ Pin rope guide **1** to fork **4**.

▶ Secure the pin **6** with washer **2** and retaining spring **3**.

If the assembly position of the rope guide is identical to the assembly position of the mid-point suspension:
▶ pin the ropes on the mid-point suspension to the rope guide forks.

▶ Secure the pin with a washer and safety pin.

NOTICE
The screws **5** must not be tightened before the ropes on the mid-point suspension are pinned to the rope guide forks!
Risk of damage to the components.

Once the ropes on the mid-point suspension are pinned to the rope guide forks:
▶ tighten screws **5**.

▶ Use both screws **5** to vertically align the rope guide and manually fix it in place.

7.6.8 Pinning the pendant straps

▶ Remove safety pins from the transport brackets for pendant straps.

LWN/LR.x/V03.01//Auslieferung/2015-06-03/en

copyright by
LIEBHERR

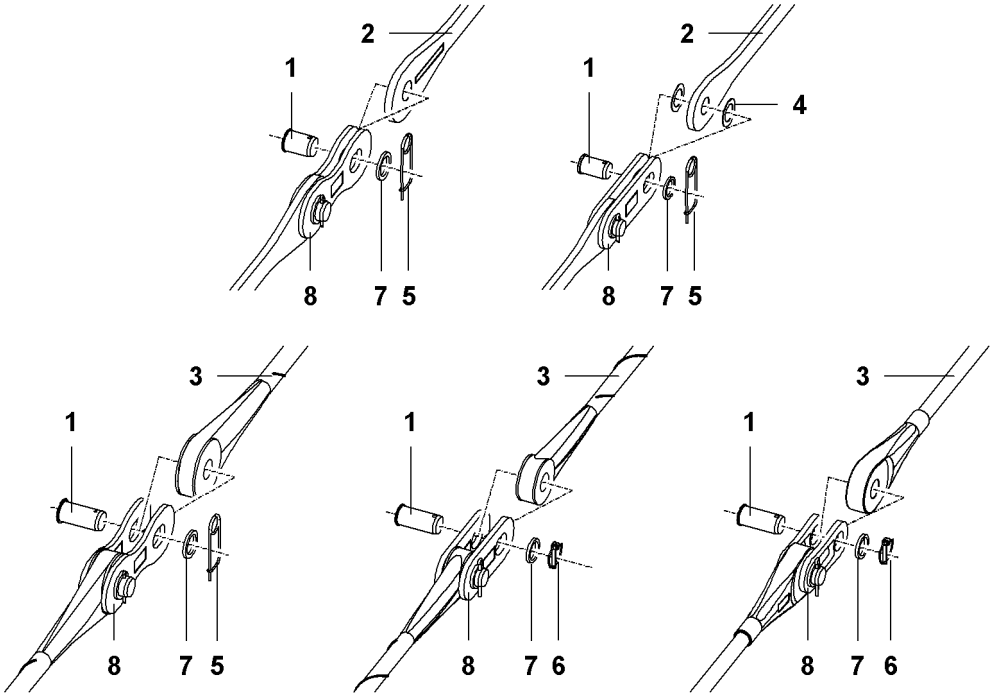

Fig. 3193: Bolt the pendant straps (schematic diagram of various pendant straps)

1	Pin	**5**	Safety pin
2	Steel pendant strap	**6**	Linch pin
3	Carbon-fibre pendant strap	**7**	Washer
4	Plastic washer (2x)	**8**	Connecting link

▶ Remove the pin **1** on the connecting link **8**.

▶ Position the pendant strap **2, 3** between the two coupling links **8**.
or

If the pendant strap has plastic washers **4**:
Position the pendant strap **2** with plastic washers **4** on both sides between the two connecting links **8**.

▶ Insert pin **1** and secure with washers **7** and safety pin **5** or linch pin **6**.

7.6.9 Removing the jib backstay straps

The jib backstay straps are transported on the boom sections. They can be removed if no jib is mounted.

Note
Higher load with deinstalled jib backstay straps!

▶ Refer to the foreword in the valid load capacity chart.

If the jib backstay straps are left on the main boom:

▶ Pin the jib backstay straps together and secure with washers and a safety pin.

▶ Pin the connecting links on the boom head section to the jib backstay straps and secure with washers and a safety pin.

▶ Pin the connecting links on the boom base section to the jib backstay straps and secure with washers and a safety pin.

▶ Secure the transport brackets for the jib backstay straps with safety pins.

LWN/LR.x/V03.01//Auslieferung/2015-06-03/en

copyright by
LIEBHERR

7.6.10 Installing mid-point suspension

The lengths of the stay ropes and their assembly positions are shown in the relevant instructions for the boom.

Note
Special procedure for installing the mid-point suspension for main boom 2821 with main boom length of 80 m (262‘ 6“ ft-in), 83 m (272‘ 4“ ft-in) or 86 m (282‘ 2“ ft-in) and installed jib 1507!

▶ Fit mid-point suspension as instructed.

DANGER
Incorrect installation of mid-point suspensions!
Structural breakdown.

▶ Fit mid-point suspensions according to relevant system instructions.

▶ Assemble required length of stay ropes in line with system-relevant details.

▶ Remove the safety pins and washers from both sides of the boom pin connection double-taper pin and stow away.

▶ Repeat procedure on opposite side.

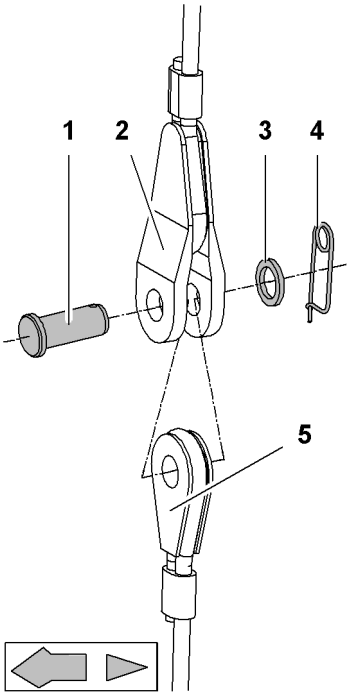

Fig. 3194: Pinning mid-point suspension stay ropes

1	Pin	**4**	Safety pin
2	Top stay rope	**5**	Bottom stay rope
3	Washer		

▶ Pin top stay rope **2** to bottom stay rope **5**.

▶ Secure the pin **1** with washer **3** and retaining spring **4**.

LWN/LR.x/V03.01//Auslieferung/2015-06-03/en

copyright by LIEBHERR

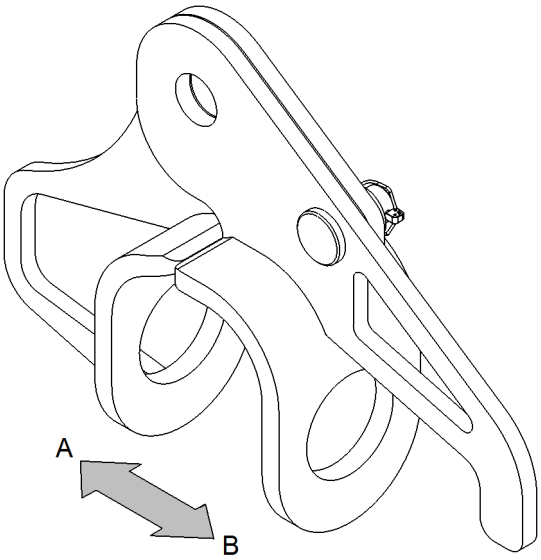

Fig. 3195: Mid-point suspension forks

A Main boom interior **B** Main boom exterior

The forks may have different shapes. The permissible shape depends on the boom configuration (For more information see: 1 Product description, page 49) .

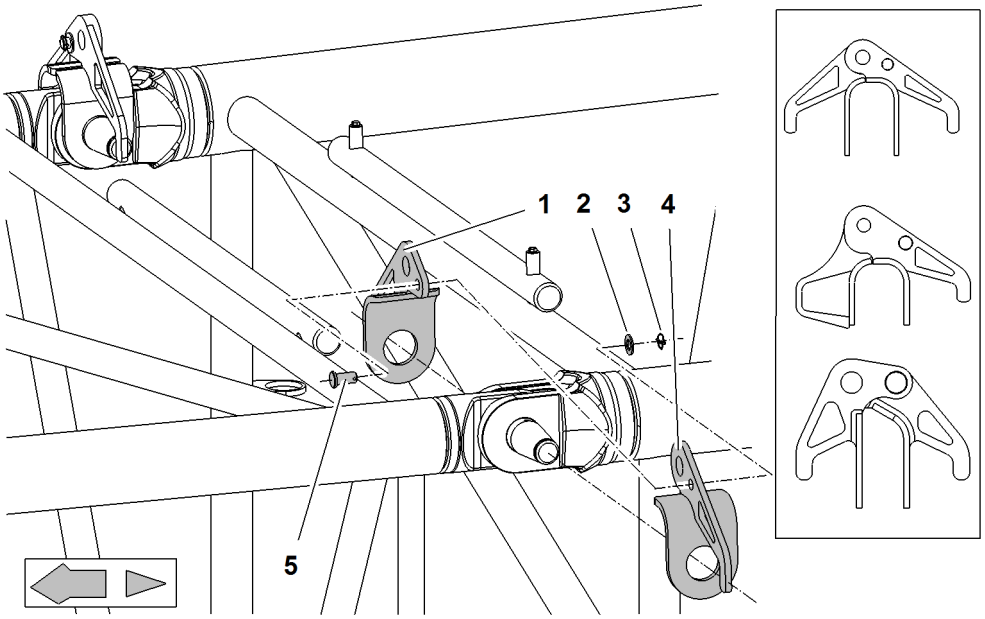

Fig. 3196: Assembling the mid-point suspension forks

1 Inner section of fork
2 Washer
3 Linch pin
4 Outer section of fork
5 Pin

Note
Special assembly procedure when the mid-point suspension and rope guide are installed in exactly the same position on the main boom!

▶ The rope guide forks replace the mid-point suspension forks.

▶ Mount inner section of fork **1** on double-taper pin.

LWN/LR.x/V03.01//Auslieferung/2015-06-03/en

- ▶ Mount outer section of fork **4** on double-taper pin.
- ▶ Pin inner section of fork **1** to outer section of fork **4**.
- ▶ Secure pin **5** with a washer **2** and linch pin **3**.
- ▶ Repeat procedure on opposite side.

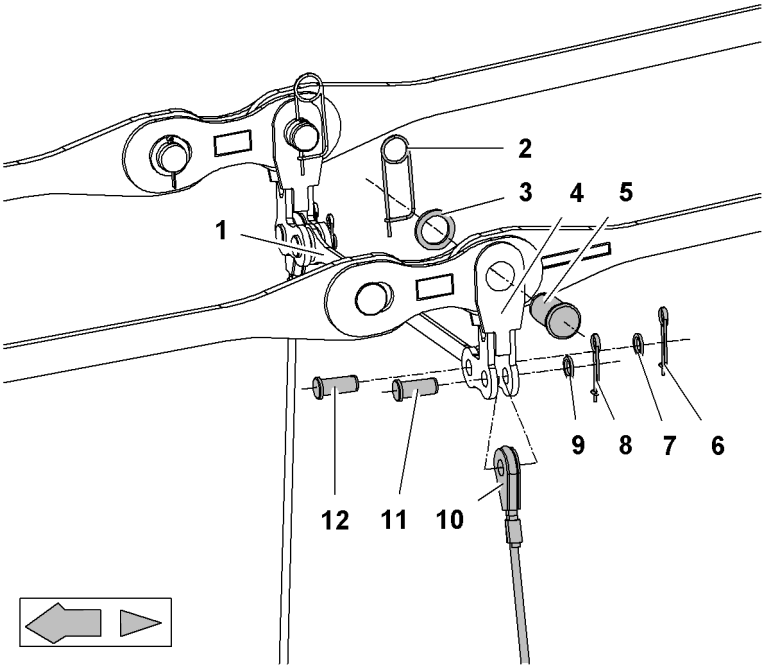

Fig. 3197: Installing the pendant straps, spacer bracket, connecting elements and mid-point suspension stay ropes

1	Spacer bracket	**7**	Washer
2	Safety pin	**8**	Safety pin
3	Washer	**9**	Washer
4	Connecting element	**10**	Stay rope
5	Pins for pendant strap	**11**	Pin for stay rope
6	Safety pin	**12**	Pin for spacer bracket

- ▶ Pin connecting element **4** to pendant strap.
- ▶ Secure the pin **5** with washer **3** and retaining spring **2**.
- ▶ Pin connecting element **4** to spacer bracket **1**.
- ▶ Secure the pin **12** with washer **7** and retaining spring **6**.
- ▶ Pin connecting element **4** to stay rope **10**.
- ▶ Secure the pin **11** with washer **9** and retaining spring **8**.
- ▶ Repeat procedure on opposite side.

LWN/LR.x/V03.01//Auslieferung/2015-06-03/en

copyright by
LIEBHERR

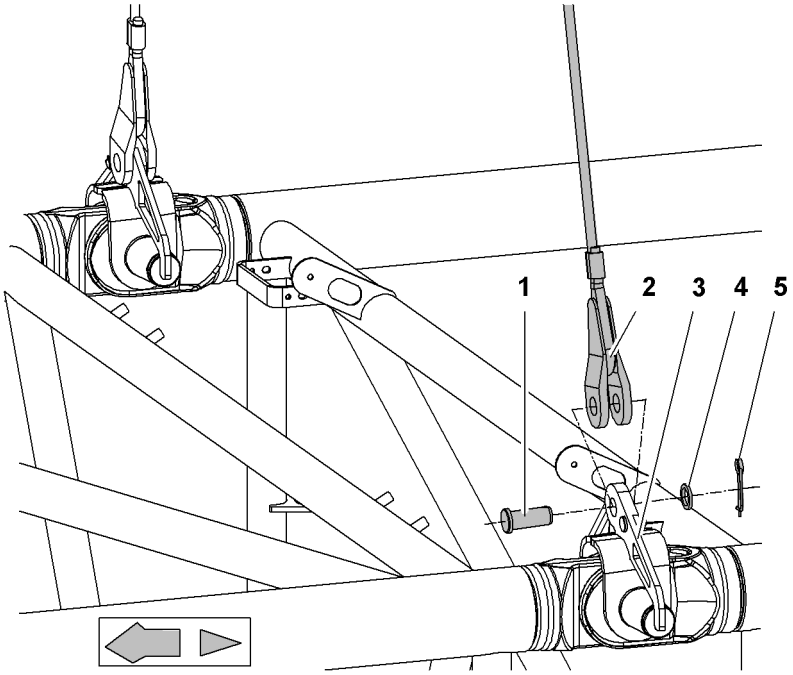

Fig. 3198: Pinning stay ropes to forks of mid-point suspension

1	Pin	**4**	Washer
2	Stay rope	**5**	Safety pin
3	Fork		

▶ Pin stay rope **2** to fork **3**.

▶ Secure the pin **1** with washer **4** and retaining spring **5**.

▶ Repeat procedure on opposite side.

7.6.11 Installing mid-point suspension (with main boom length 80 m (262 ft), 83 m (272 ft) and 86 m (282 ft) and jib 1507 attached)

With a main boom length of 80 m (262 ft), 83 m (272 ft) and 86 m (282 ft) and 1507 fixed jib attached, installation of the mid-point suspension represents a special case.

DANGER
Incorrect installation of mid-point suspensions!
Structural failure.

▶ Fit mid-point suspensions according to relevant system instructions.

LWN/LR.x/V03.01//Auslieferung/2015-06-03/en

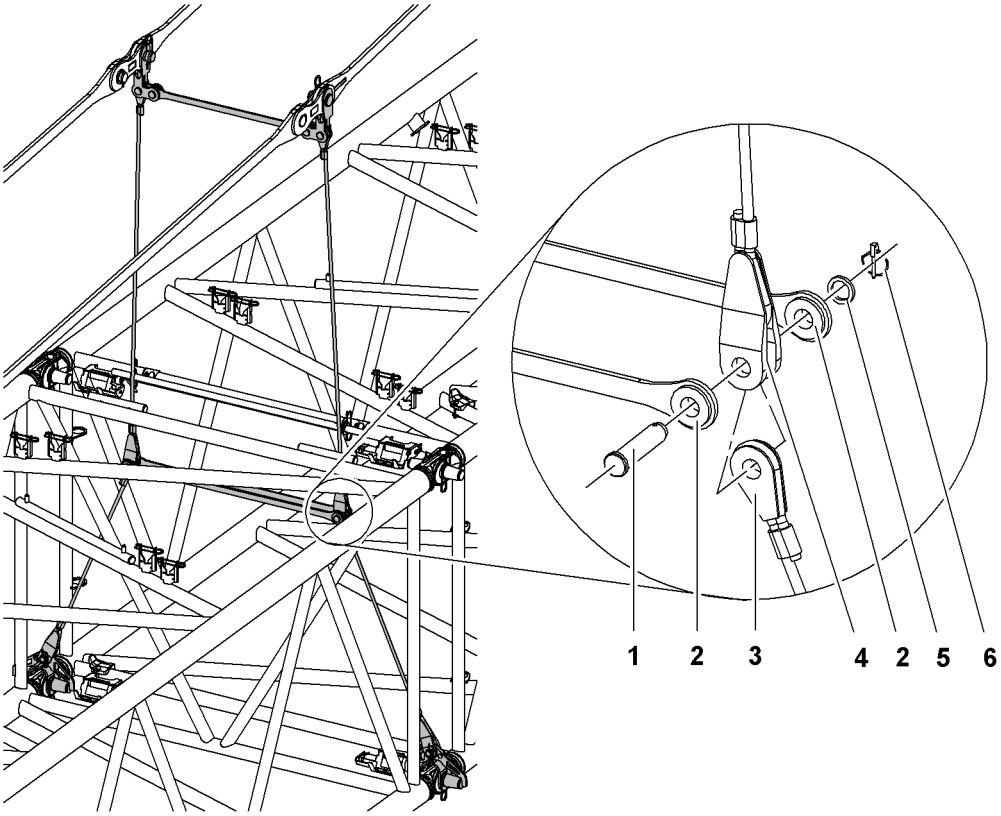

Fig. 3199: Pinning stay ropes to spacer brackets

1	Pin for spacer bracket	**4**	Top stay rope
2	Spacer bracket (2x)	**5**	Washer
3	Bottom stay rope	**6**	Linch pin

- ▶ Pin mid-point suspensions to pendant straps (For more information see: 7.6.10 Installing mid-point suspension, page 1259) (For more information see: Installing mid-point suspension, page 1367) .
- ▶ Pin top stay rope **4** and bottom stay rope **3** to spacer bracket **2**.
- ▶ Secure pin **1** with a washer **5** and linch pin **6**.
- ▶ Repeat procedure on opposite side.
- ▶ Pin mid-point suspension with boom section (For more information see: 7.6.10 Installing mid-point suspension, page 1259) (For more information see: Installing mid-point suspension, page 1367) .

7.6.12 Rigging and lifting the main boom base section

Note

If the jib has been attached using the self-assembly system:

- ▶ Assemble the fixed jib and attach it to the main boom before installing the main boom base section.
- ▶ Assemble the luffing jib prior to installing the main boom base section and install jib base section on main boom.

LWN/LR.x/V03.01//Auslieferung/2015-06-03/en

copyright by LIEBHERR

Note

Liebherr recommends:

▶ even if an assist crane is available, connecting the main boom base section to A-frame1 using the assembly cylinder is to be preferred.

Ensure that the following conditions are fulfilled:

❑ Work of the basic machine as assist crane is completed.

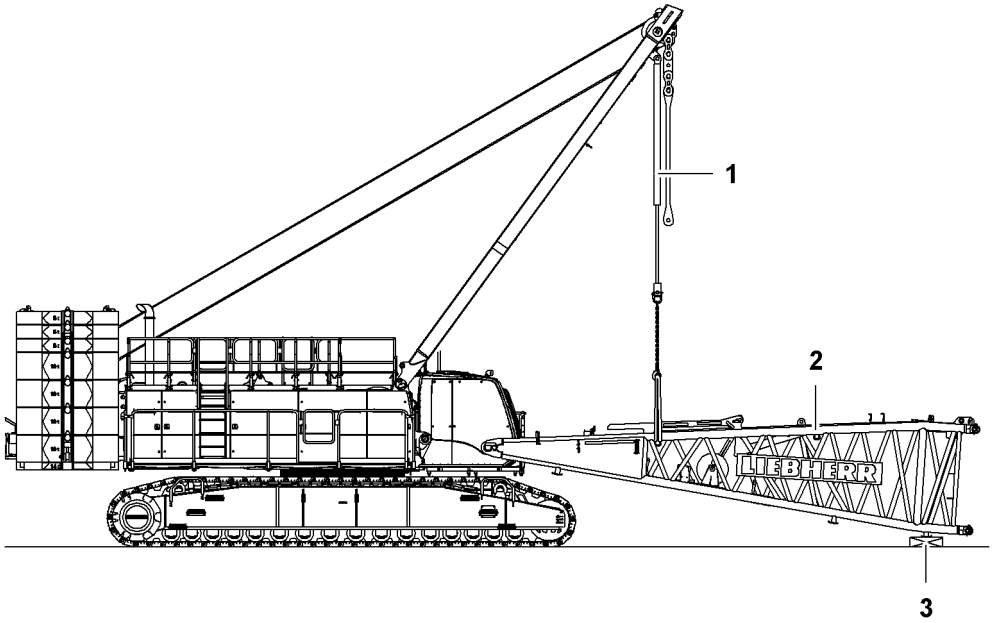

Fig. 3200: Rigging and lifting the main boom base section

1 Assembly cylinder
2 Main boom base section
3 Wooden block

▶ Support boom base section **2** front on wooden blocks **3**.

▶ Rig main boom base section **2** to assembly cylinder **1**.

▶ Lift main boom base section **2**.

7.6.13 Attaching the boom base section to the uppercarriage

WARNING

Machine swings with a suspended load!
Crush, fatal injury.

▶ Make sure that no-one is standing in the danger area.

▶ Leave the danger area.

Ensure that the following conditions are fulfilled:

❑ Cylinder adjustment functions are switched on.

▶ Open the front right uppercarriage door.

▶ Plug in the cable remote control on the uppercarriage.

LWN/LR.x/V03.01//Auslieferung/2015-06-03/en

copyright by LIEBHERR

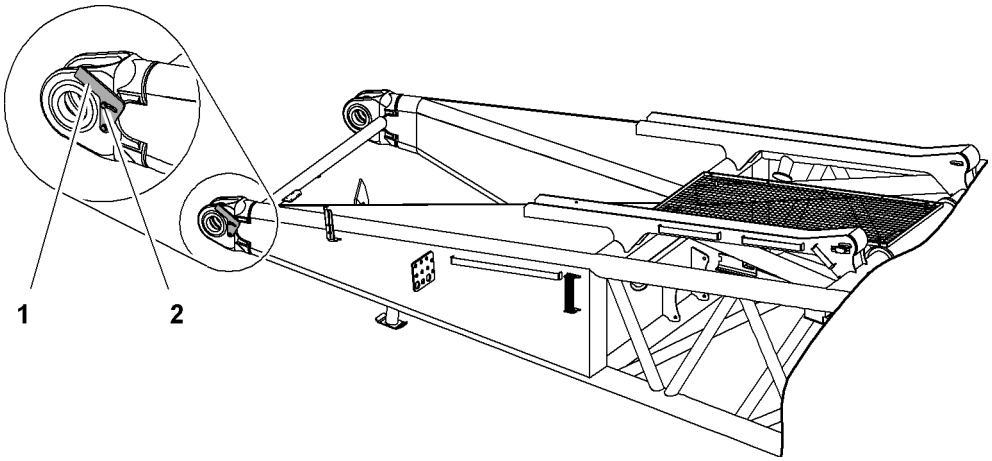

Fig. 3201: Fold up locking elements

1 Locking element (2x) **2** Screw (2x)

▶ Undo screws **2**.

▶ Fold up locking elements **1**.

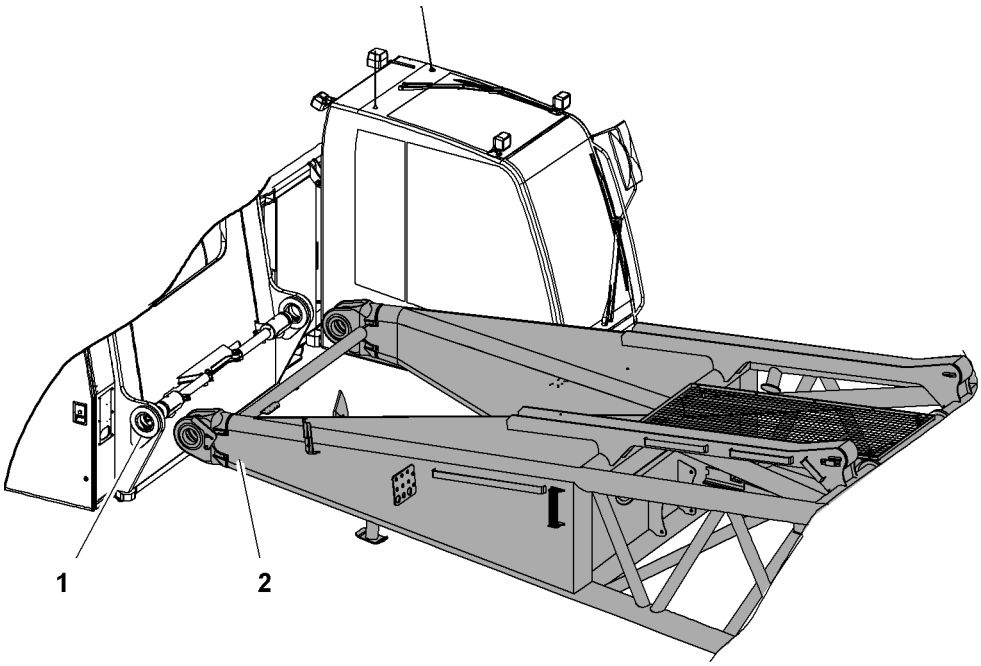

Fig. 3202: Positioning the boom base section

1 Pivot point (2x) **2** Main boom base section

NOTICE
Main boom base section **2** swings!
Damage to cab.

▶ Ensure that an assistant guides the main boom base section **2** during installation.

▶ Align main boom base section **2** to uppercarriage pivot points **1**.

LWN/LR.x/V03.01//Auslieferung/2015-06-03/en

copyright by
LIEBHERR

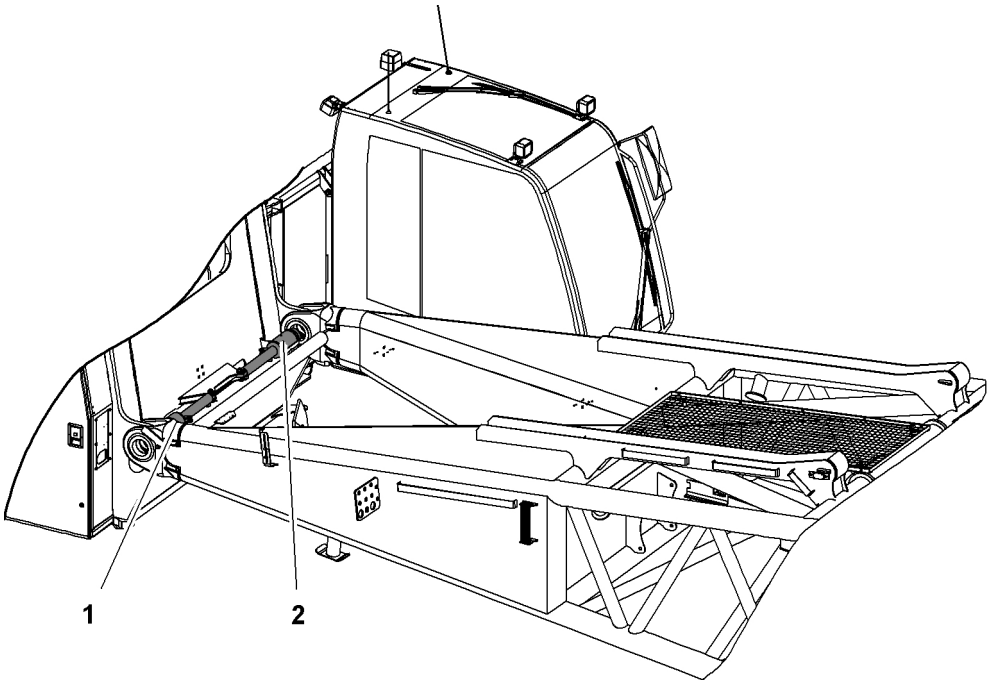

Fig. 3203: Extending the pin connection cylinder

1 Right-hand pin connection cylinder **2** Left-hand pin connection cylinder

CAUTION
Moving parts!
Crushing.

▶ Keep all limbs well clear of moving parts.

NOTICE
Incorrect procedure during bolting!
Pin connection cylinder and pin connection points may be damaged.

▶ Only extend the pin connection cylinder when the pin connection points on the boom base section and the uppercarriage are exactly aligned.

If the pin connection points of the main boom base section are flush with the pin connection points of the uppercarriage:

▶ Extend left pin connection cylinder **2** with cable remote control.

▶ Extend right pin connection cylinder **1** with cable remote control.

LWN/LR.x/V03.01//Auslieferung/2015-06-03/en

copyright by
LIEBHERR

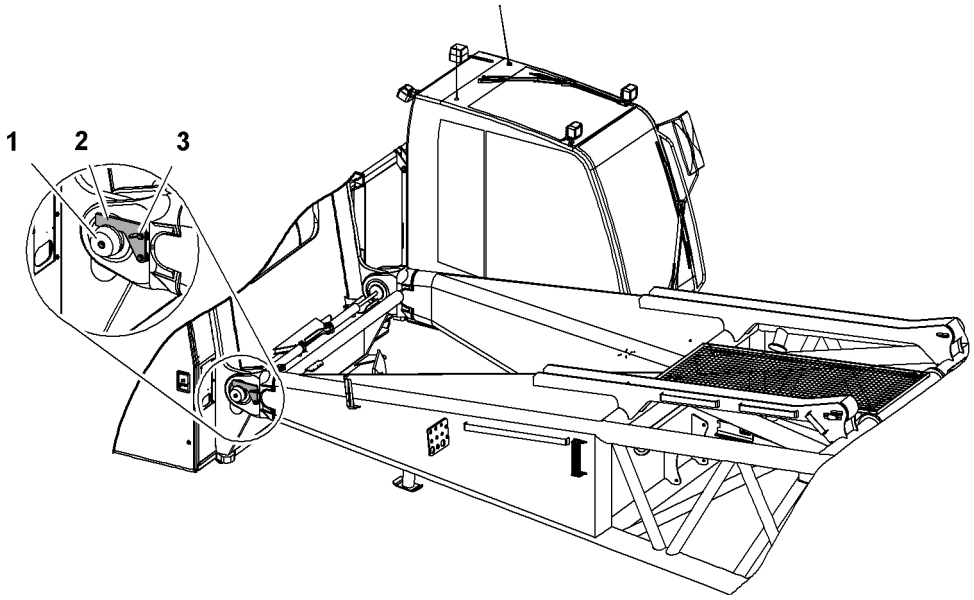

Fig. 3204: Secure pins with locking elements

1 Pin (2x)
2 Locking element (2x)
3 Screw (2x)

▶ Fold locking element **2** into pin **1** notch.

▶ Securing the locking elements **2**: tighten screws **3**.

▶ Lower the boom base section to the ground or onto wooden blocks.

▶ Detach sling gear.

▶ Remove sling gear from assembly cylinder and stow it away.

▶ Unplug cable remote control on uppercarriage and stow away.

▶ Close the front right uppercarriage door.

7.6.14 Connecting hydraulic lines to the uppercarriage

Ensure that the following conditions are fulfilled:
❑ Hand lever for the multi-coupling is available.
❑ Diesel engine is switched off.

LWN/LR.x/V03.01//Auslieferung/2015-06-03/en

copyright by
LIEBHERR

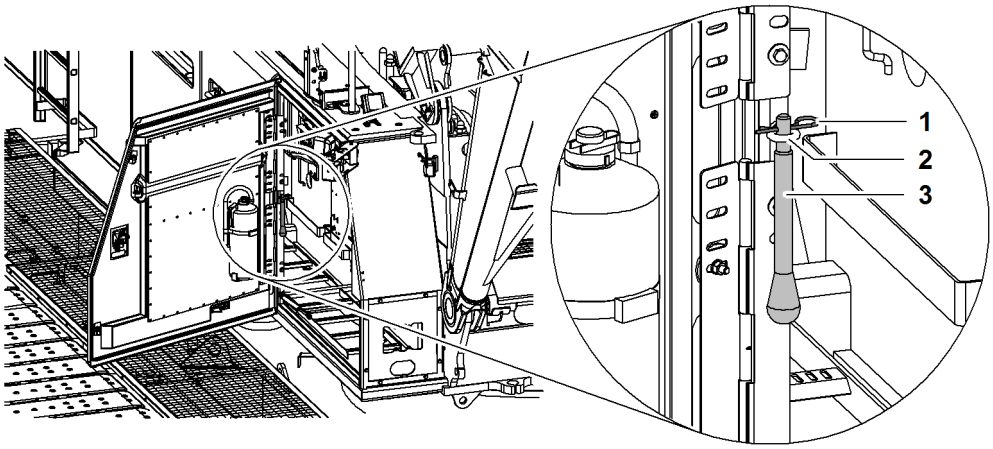

Fig. 3205: Transport mount for hand lever of multi-coupling

1 Locking spring
2 Ring
3 Hand lever

▶ Lift hand lever **3** and remove locking spring **1**.

▶ Remove hand lever **3** downwards from ring **2**.

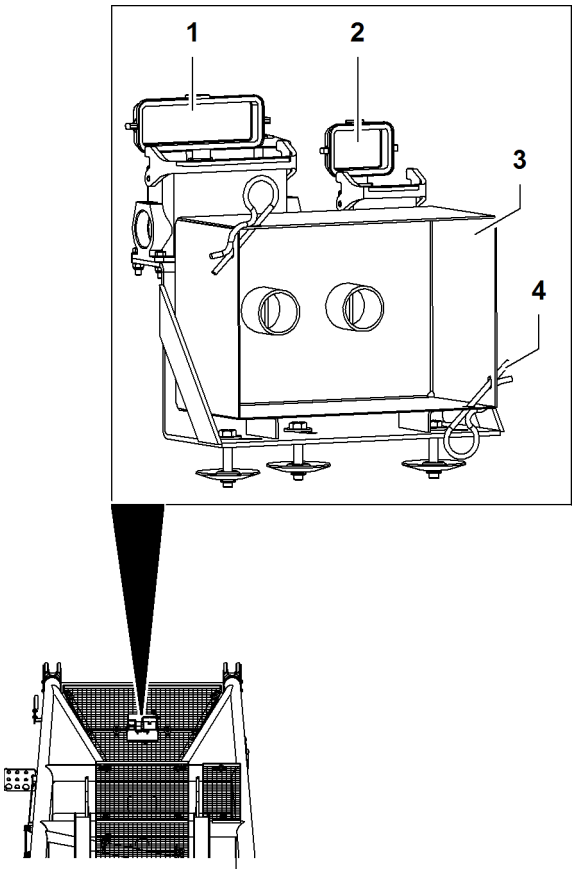

Fig. 3206: Transport position of the hydraulic pipes and electric cables on the main boom base section

1 Dummy socket for electrical system main boom base section
2 Dummy receptacle for electronics rope reeving winch
3 Cover of multi-coupling
4 Spring cotter pin

LWN/LR.x/V03.01//Auslieferung/2015-06-03/en

A bracket for the cover **3** of the multi-coupling and dummy sockets for the electrical system are located on the catwalk of the main boom base section.

▶ Fit the hand lever of the multi-coupling.

▶ Remove spring cotter pin **4** on cover **3**.

▶ Turn hand lever in the direction of the arrow.
  ▷ Multi-coupling can be taken out of bracket.
  ▷ Cover **3** remains in bracket on main boom base section.

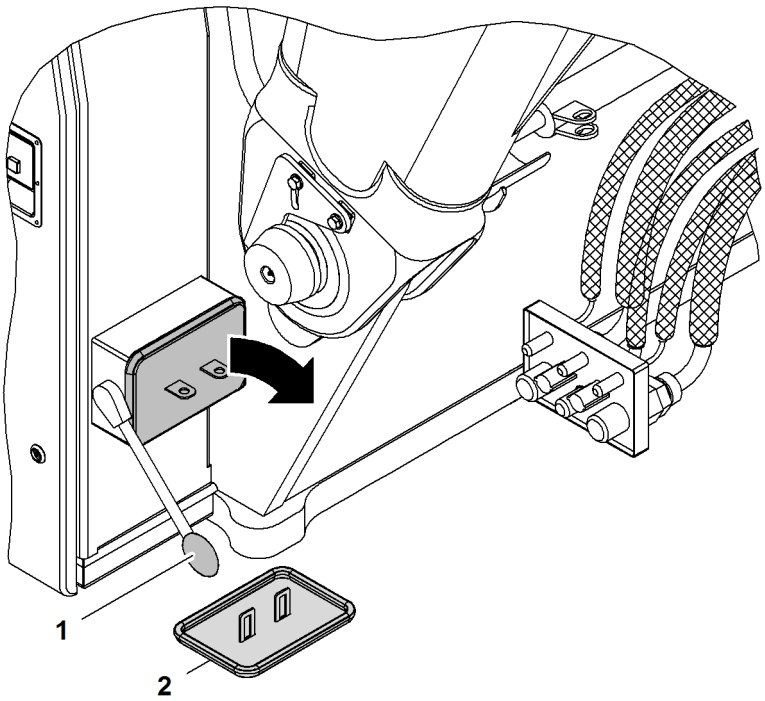

Fig. 3207: Removing the cover of the multi-couplings

1	Hand lever	**3**	Cover
2	Cover	**4**	Locking spring

▶ Fit the hand lever **1** of the multi-coupling.

▶ Remove the locking spring **4** on the cover **3**.

▶ Turn hand lever **1** in the direction of the arrow.
  ▷ Cover **2** is loose.

▶ Mount cover **3** on bracket of the main boom base section and secure with locking spring.

▶ Remove cover **2**.

LWN/LR.x/V03.01//Auslieferung/2015-06-03/en

copyright by
LIEBHERR

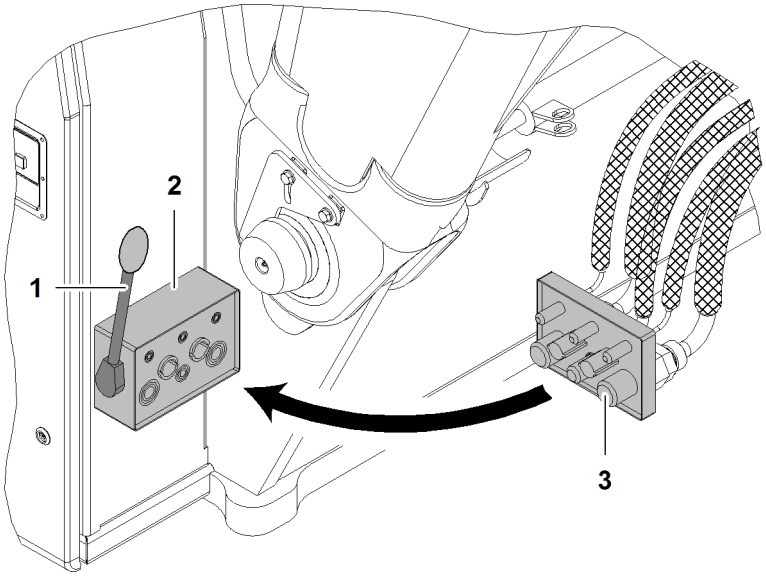

Fig. 3208: Connecting hydraulic lines to the uppercarriage

1 Hand lever

2 Multi-coupling (uppercarriage)

3 Multi-coupling (main boom base section)

NOTICE
Dirty multi-couplings!
Damage to the hydraulic system.

▶ Clean the multi-couplings before fitting them together.

▶ Connect the multi-couplings **2 + 3**.

▶ Move hand lever **1** until latch engages.
▷ The multi-couplings are visibly and audibly pulled together.
▷ The multi-coupling indicating pins stick out:

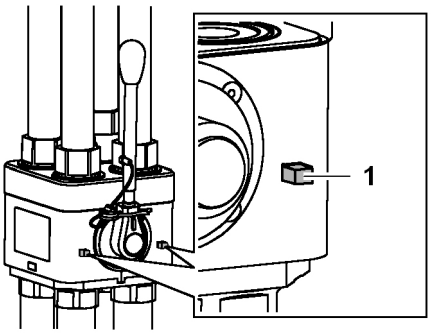

Fig. 3209: Locked multi-coupling

1 Indicating pin (2x)

▶ Disassemble the hand lever **1** on the multi-coupling.

LWN/LR.x/V03.01//Auslieferung/2015-06-03/en

7.6.15 Connecting electric cables to the uppercarriage

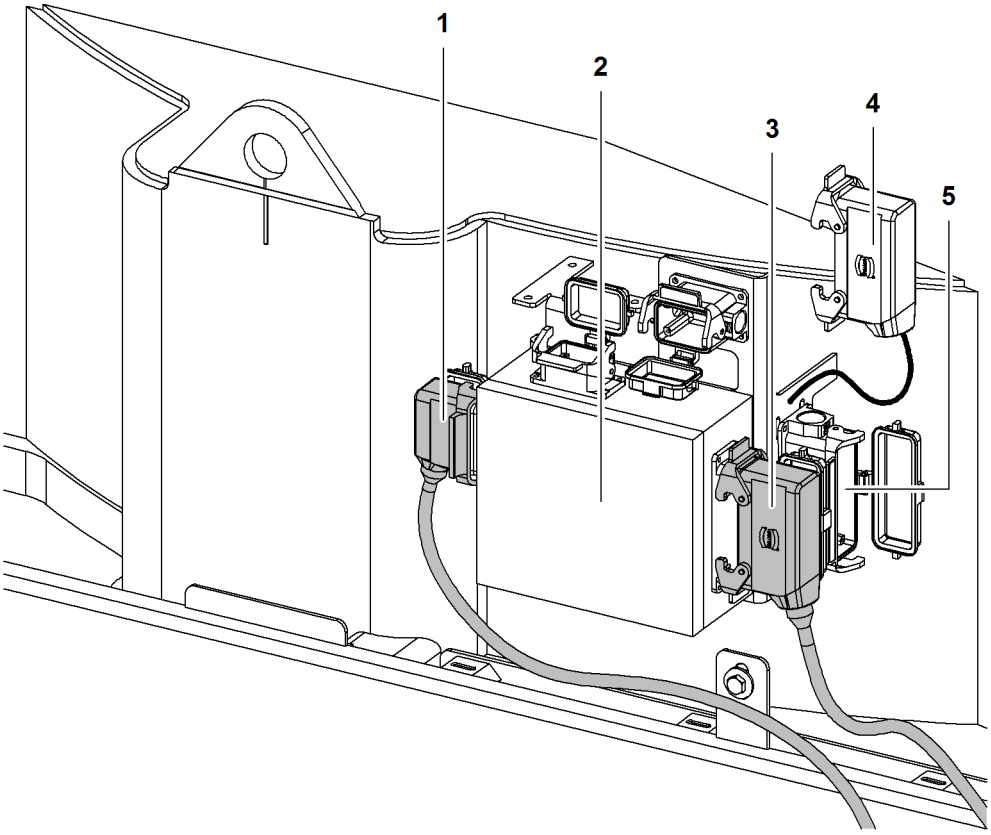

Fig. 3210: Connecting electric cables to the uppercarriage

1	Electric cables of the jib luffing winch and/or rope reeving winch	**4**	Bypass plug
2	Electric box	**5**	Dummy receptacle
3	Electric cables of the main boom base section		

▶ Open right front uppercarriage door.

▶ Plug the bypass plug **4** in the dummy receptacle **5** and secure it with the retaining clips.

▶ Guide the electric cables **3** of the main boom base section through the cable duct on uppercarriage.

▶ Plug electric line **3** into electric box **2** and lock with brackets.

▶ Guide the electric cables **1** of the jib luffing winch through the cable duct on uppercarriage.

▶ Plug electric line **1** into electric box **2** and lock with brackets.

▶ Close right front uppercarriage door.

7.6.16 Pinning the assembly cylinder to main boom base section

Ensure that the following conditions are fulfilled:
❑ Cylinder adjustment functions are switched on.

LWN/LR.x/V03.01//Auslieferung/2015-06-03/en

copyright by LIEBHERR

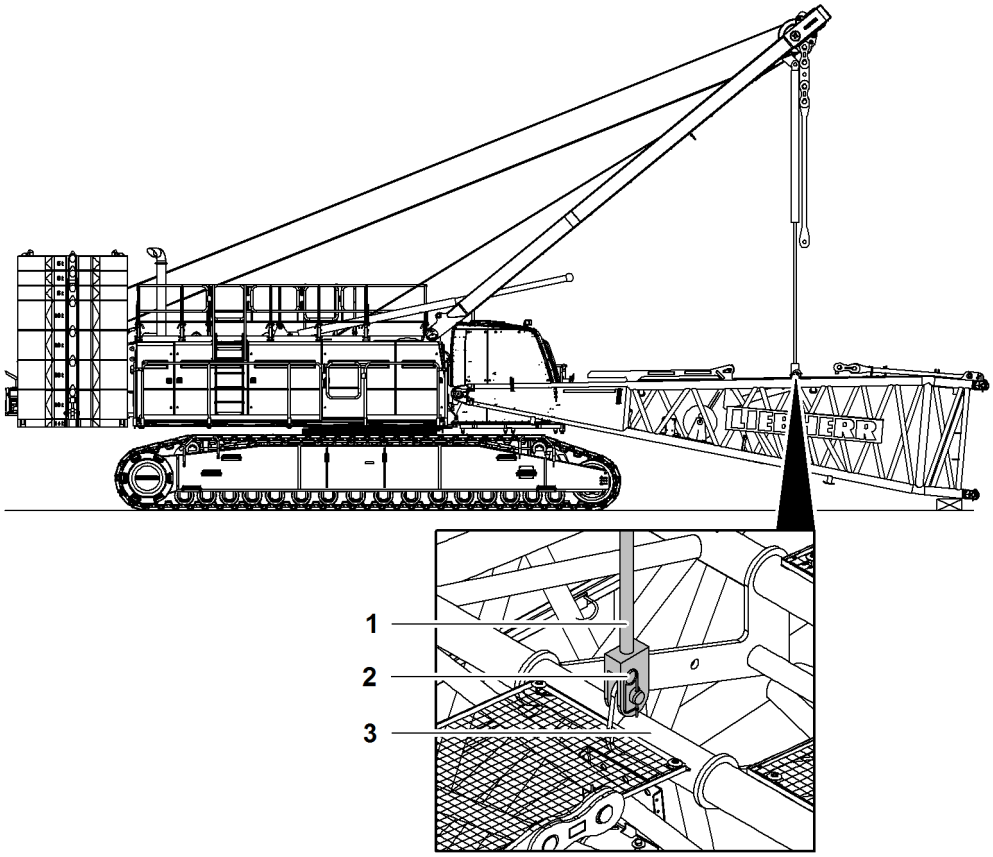

Fig. 3211: Pinning the assembly cylinder to main boom base section

1 Assembly cylinder
2 Locking spring
3 Main boom base section

▶ Unwind the boom winch.
▷ A-frame1 lowers.

▶ Extend assembly cylinder **1**.

▶ Pin assembly cylinder **1** to main boom base section **3**.

▶ Secure pin with locking spring **2**.

NOTICE
Lifting/lowering the main boom base section **3** with main boom luffing winch is not permitted!
Damage to main boom base section **3** and machine.

▶ Only lift or lower main boom base section **3** with assembly cylinder **1**.

▶ Retract assembly cylinder **1**.
▷ Main boom base section **3** lifts.

▶ Press the switch *Extend tilting-back support cylinders* on control panel *X12* until the tilting-back support cylinders are completely extended.

LWN/LR.x/V03.01//Auslieferung/2015-06-03/en

7.6.17 Folding the front feet of the main boom base section upwards

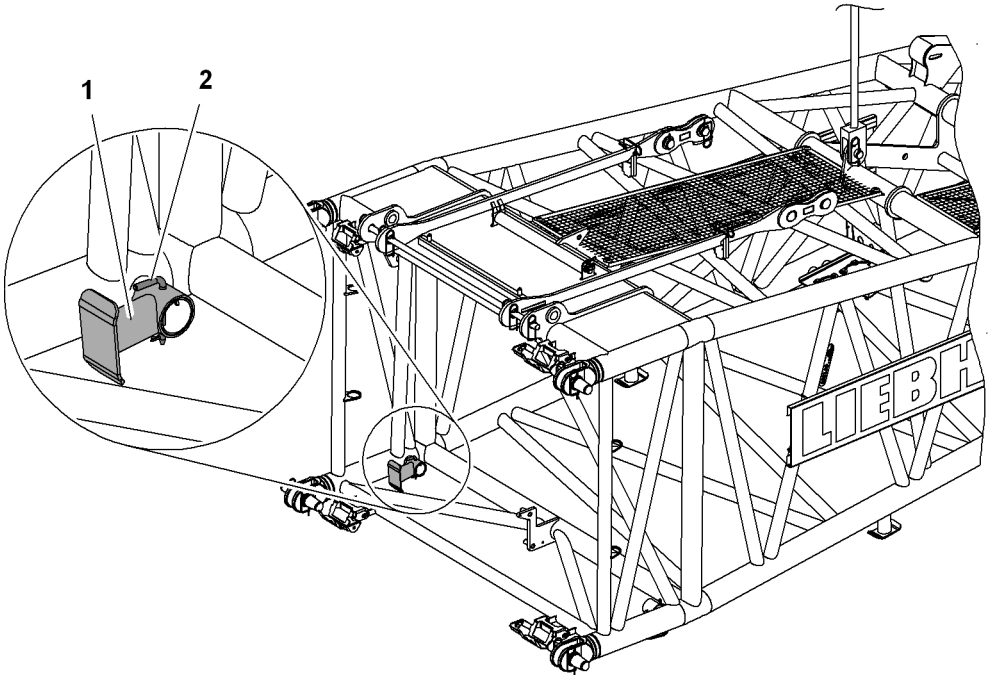

Fig. 3213: Folding the front feet of the main boom base section upwards

1 Front foot (2x) **2** Locking element (2x)

▶ Fold front feet **1** up by 90°.

▶ Secure front feet **1** with locking elements **2**.

7.6.18 Bolting the boom base section to the main boom

Ensure that the following conditions are fulfilled:
❑ Front feet are folded up.

▶ Maneuver the basic machine to the main boom.

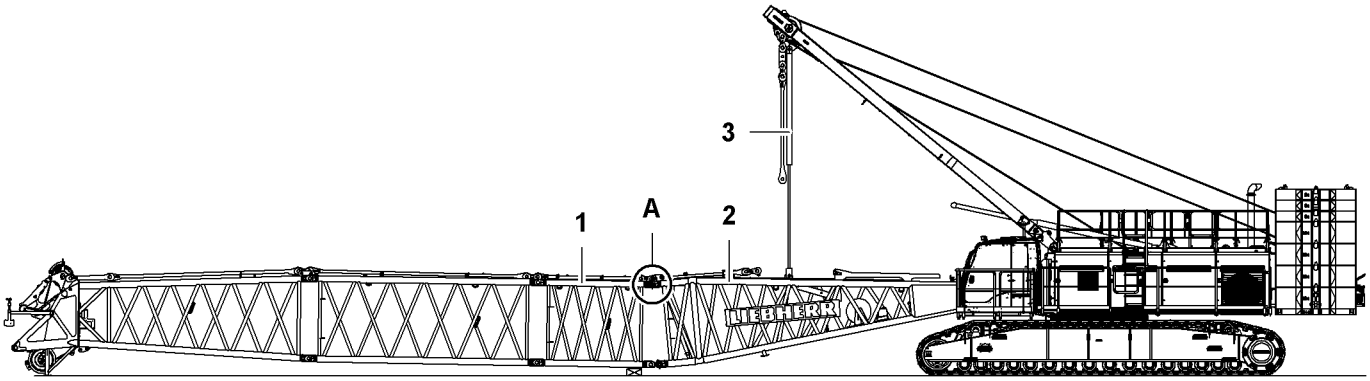

Fig. 3214: Pin main boom base section to main boom at the top

1 Main boom **3** Assembly cylinder
2 Main boom base section **A** Top pin connection point (2x)

▶ Extend or retract assembly cylinder **3** until the top pin connection points **A** of the main boom base section **2** and the main boom **1** are flush.

LWN/LR.x/V03.01//Auslieferung/2015-06-03/en

copyright by LIEBHERR

- ▶ Pin main boom base section **2** with main boom **1** to top pin connection points **A**.
- ▶ Secure the double-taper pins with washers and safety pins.

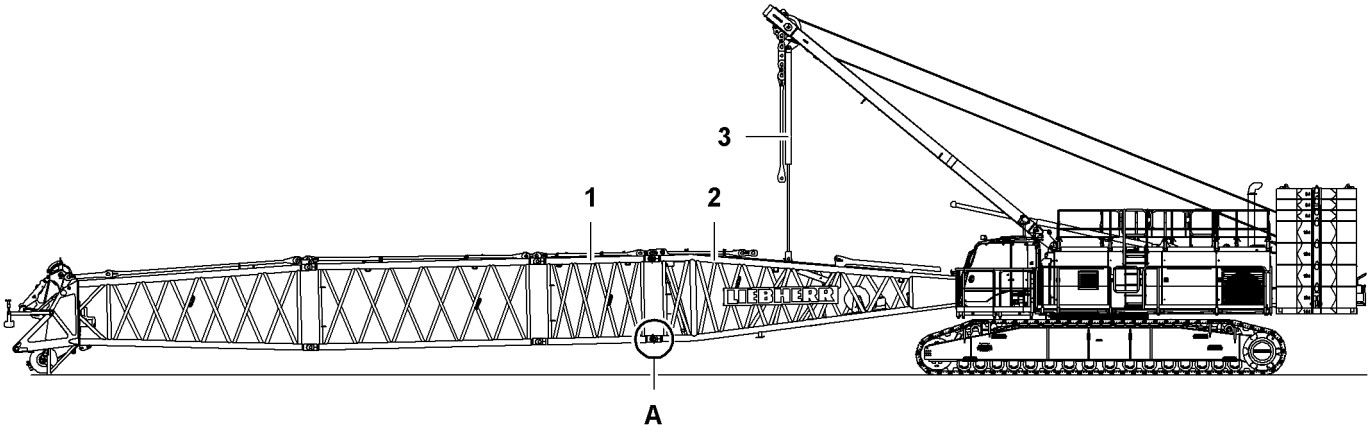

Fig. 3215: Pinning the main boom base section to the main boom at the bottom

1	Main boom	**3**	Assembly cylinder
2	Main boom base section	**A**	Bottom pin connection point (2x)

NOTICE
Unauthorized raising of main boom **1** with assembly cylinder **3**!
Damage to main boom **1** and assembly cylinder **3**.

- ▶ Only retract assembly cylinder **3** so far that pinning the bottom pin connection points **A** on the main boom base section **2** is still possible.

- ▶ Retract assembly cylinder **3** until the bottom pin connection points **A** of the main boom base section **2** and the main boom **1** are flush.
- ▶ Pin main boom base section **2** with main boom **1** to bottom pin connection points **A**.
- ▶ Secure the double-taper pins with washers and safety pins.
- ▶ Detach assembly cylinder **3** from main boom base section **2**.
- ▶ Retract assembly cylinder **3**.

LWN/LR.x/V03.01//Auslieferung/2015-06-03/en

copyright by
LIEBHERR

7.6.19 Bolting the equalizer on A-frame 1 to the main boom pendant straps

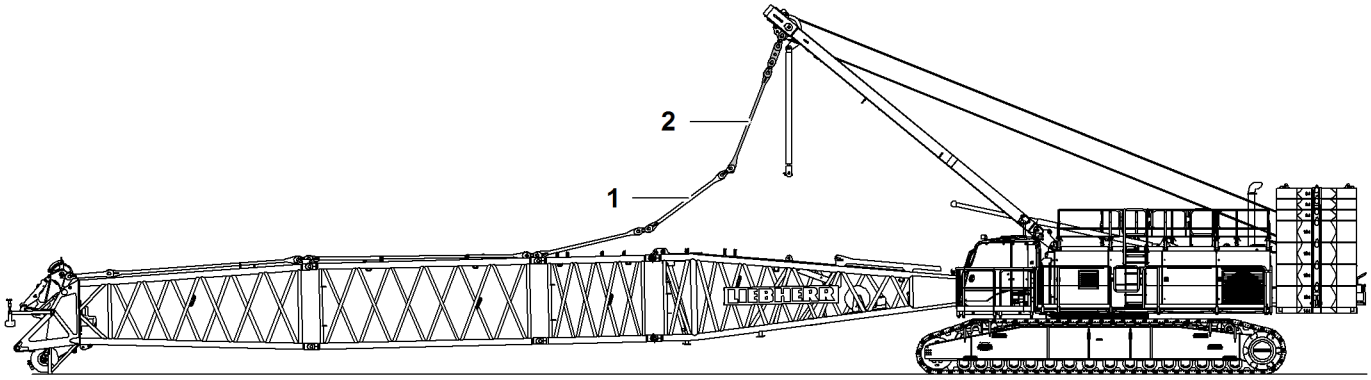

Fig. 3216: Pinning the equalizer on A-frame1 to the main boom pendant straps

1 Main boom pendant straps **2** A-frame1 equalizer

- ▶ Lower A-frame1 until equalizer of A-frame1 **2** and main boom pendant straps **1** can be pinned together.
- ▶ Pin A-frame1 equalizer **2** to main boom pendant straps **1**.
- ▶ Secure the pins with washers and safety pins.

7.6.20 Attaching the auxiliary jib (36 t (79300 lb)) to the boom head section

Make sure that the camera support (if available) on the main boom head section is detached.

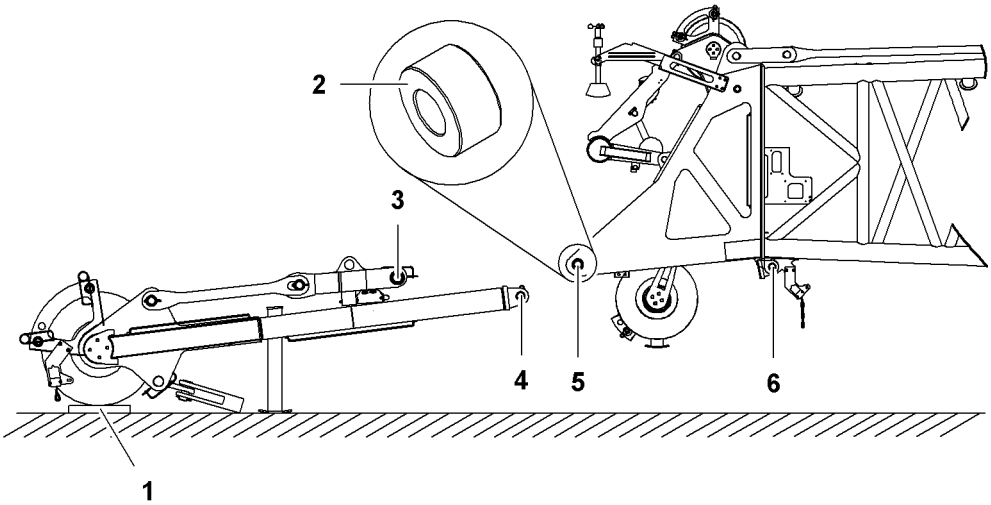

Fig. 3217: Positioning the auxiliary jib (36 t (79300 lb)) in front of the boom head section and inserting bushes

1 Wooden block

2 Bush (dia.80 mm (3.15“ in) x Ø40 mm (1.57“ in) x 43 mm (1.69“ in)) (2x)

4 Lower pin connection point auxiliary jib (2x)

5 Upper pin connection point main boom head (2x)

See next page for continuation of the image legend

LWN/LR.x/V03.01//Auslieferung/2015-06-03/en

copyright by LIEBHERR

3	Upper pin connection point auxiliary jib (2x)	**6**	Lower pin connection point main boom head (2x)

- ▶ Position the auxiliary jib in front of the boom head section.
- ▶ Protecting the pulley: Lay a wooden block **1** under the auxiliary jib pulley.
- ▶ Insert bushes (Ø80 mm (3.15“ in) x Ø40 mm (1.57“ in) x 43 mm (1.69“ in)) into the upper pin connection points **5** of the main boom head.
- ▶ Lift the main boom and move it towards the auxiliary jib until the upper pin connection points **3** on the auxiliary jib match the upper connection points of the **5** main boom head.

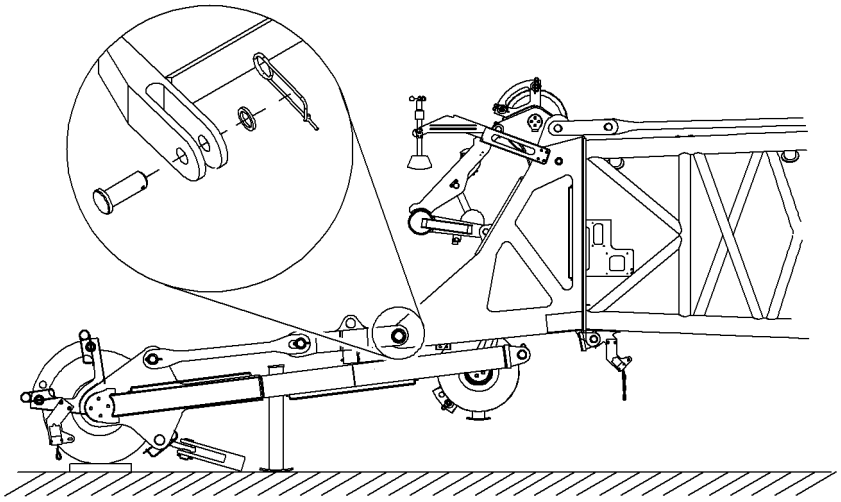

Fig. 3218: Pinning the upper pin connection points

- ▶ Pin the upper pin connection points and secure with washer and safety pin.

LWN/LR.x/V03.01//Auslieferung/2015-06-03/en

copyright by
LIEBHERR

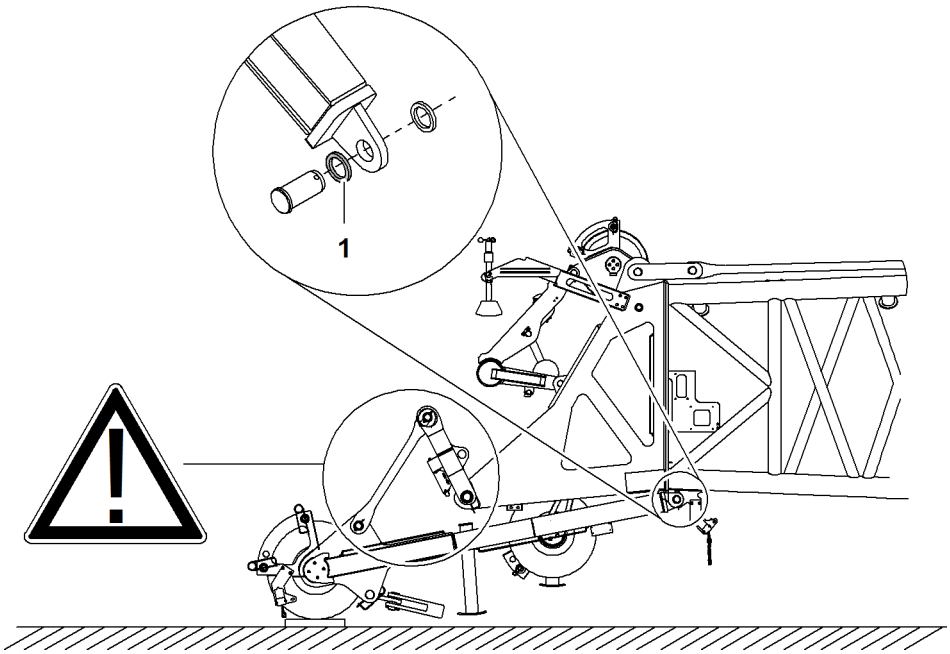

Fig. 3219: Pinning the lower pin connection points

1 Washer 8 mm (0.31“ in) (2x)

The washer 8 mm (0.31“ in) **1** serves to center the auxiliary jib on the main boom head.

NOTICE
Auxiliary jib pendant straps are positioned incorrectly!
Damage to auxiliary jib and pulleys on the boom head section.

▶ Ensure that auxiliary jib pendant straps fold up.

▶ Move the main boom towards the auxiliary jib until the bottom pin connection points **4** on the auxiliary jib match the bottom connection points of the **6** main boom head.

LWN/LR.x/V03.01//Auslieferung/2015-06-03/en

copyright by
LIEBHERR

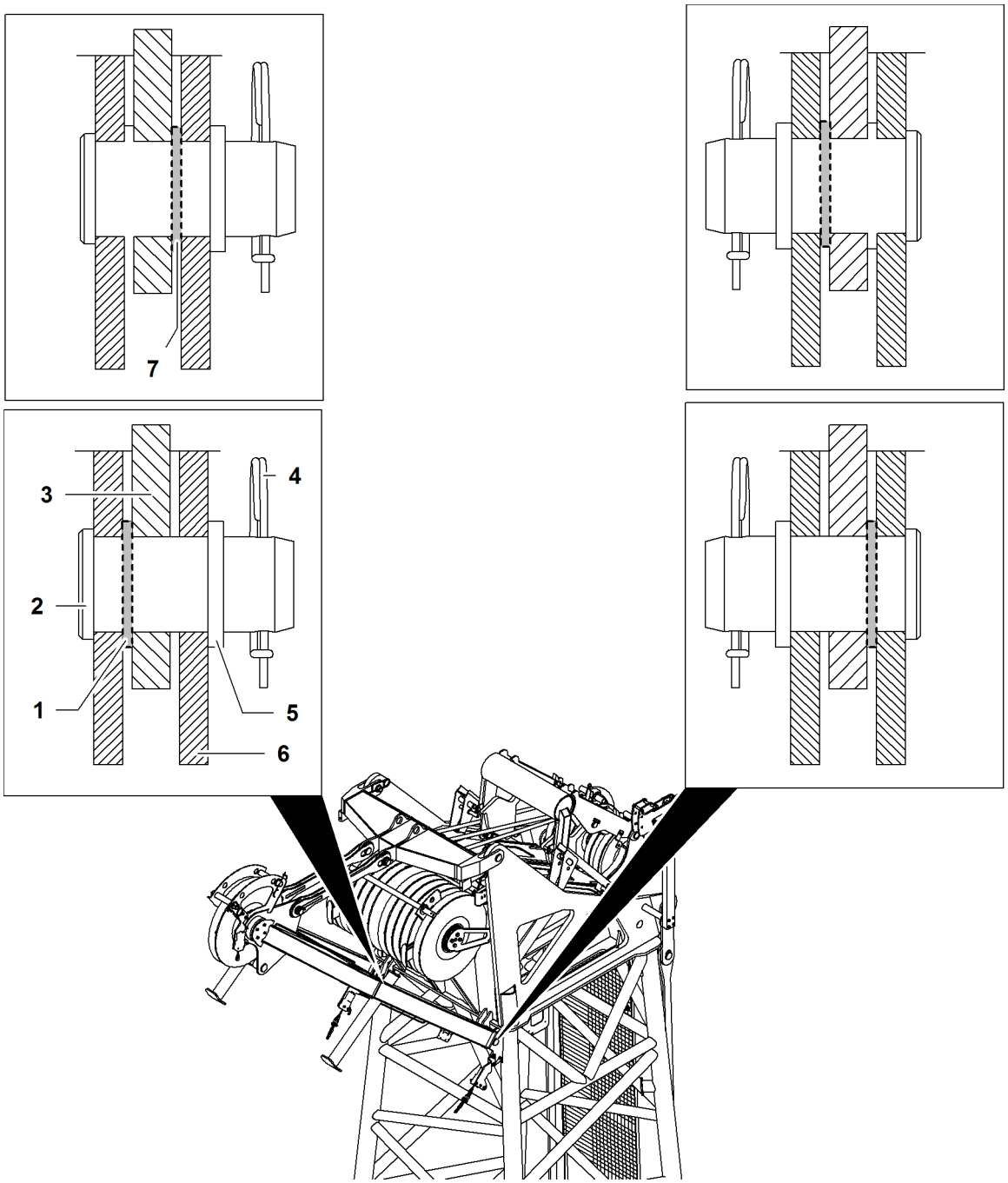

Fig. 3220: Installation notes auxiliary jib

1 Washer 8 mm (0.31“ in) (installation site outside) (2x)
2 Pin (2x)
3 Pin connection lug auxiliary jib (2x)
4 Safety pin (2x)
5 Washer (2x)
6 Pin connection lug main boom head (4x)
7 Washer 8 mm (0.31“ in) (installation site inside) (2x)

The washers 8 mm (0.31“ in) must be installed both-sided on the outside (installation site outside **1**) or both-sided on the inside (installation site inside **7**).

▶ Push pin **2** and washer 8 mm (0.31“ in) **1** through the pin connection lug **3** and the pin connection lug **6**.

▶ Place washer **5** on pin **2** and secure with safety pin **4**.
▷ Lower pin connection points pinned and secured.

LWN/LR.x/V03.01/Auslieferung/2015-06-03/en

copyright by LIEBHERR

7.6.21 Fitting the hoist limit switch to the auxiliary jib

The hoist limit switch is installed on the auxiliary jib in exactly the same way as on the main boom or jib (For more information see: 7.6.30 Installing the hoist limit switch weight, page 1301) (For more information see: Installing the hoist limit switch weight, page 1412) .

Connect the hoist limit switch

The electric cable to the hoist limit switch is connected for transport to a dummy receptacle on the inside of one of the two auxiliary jib support tubes.

- ▶ Disconnect the bypass plug from the terminal box on the boom head section.
- ▶ Disconnect the electric cable for the hoist limit switch from the dummy receptacle and connect it to the terminal box on the boom head section.
- ▶ Secure the electric cable to the hoist limit switch with retaining clips.
- ▶ Plug the bypass plug into the dummy receptacle and secure it with the retaining clips.

7.6.22 Folding down the link plates for the 11th pulley

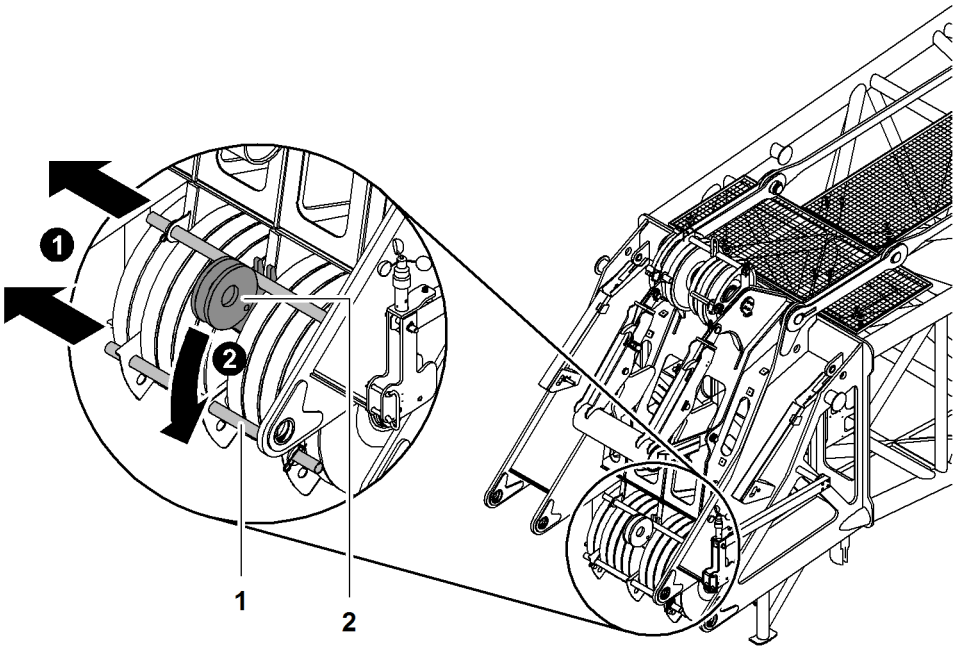

Fig. 3221: Folding down the link plates for the 11th pulley

1 Rope protection pipe (2x) **2** Link plate (2x) for 11th pulley

NOTICE
Wrong position of link plates **2** for 11th pulley on main boom head!
Risk of damage to winch2 rope.

- ▶ Fold down link plates **2** for 11th pulley.

- ▶ Remove rope protection pipes **1** on main boom head.
- ▶ Fold down link plates **2** for 11th pulley.

LWN/LR.x/V03.01//Auslieferung/2015-06-03/en

copyright by LIEBHERR

7.6.23 Installing second pulley to 3-fold reeve the auxiliary jib (36 t (79300 lb))

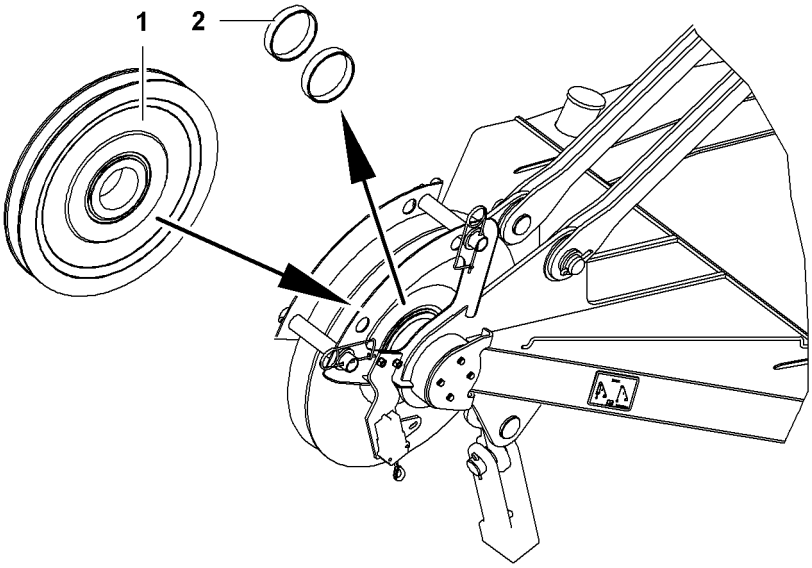

Fig. 3222: Installing second pulley to 3-fold reeve the auxiliary jib (36 t (79300 lb))

1	Second pulley	**2**	Bushes (dia.168 mm (6.61“ in) x Ø140 mm (5.51“ in) x 40 mm (1.57“ in)) (2x)

▶ Remove bushes (dia.168 mm (6.61“ in) x dia.140 mm (5.51“ in) x 40 mm (1.57“ in)) **2**

▶ Install second pulley

LWN/LR.x/V03.01//Auslieferung/2015-06-03/en

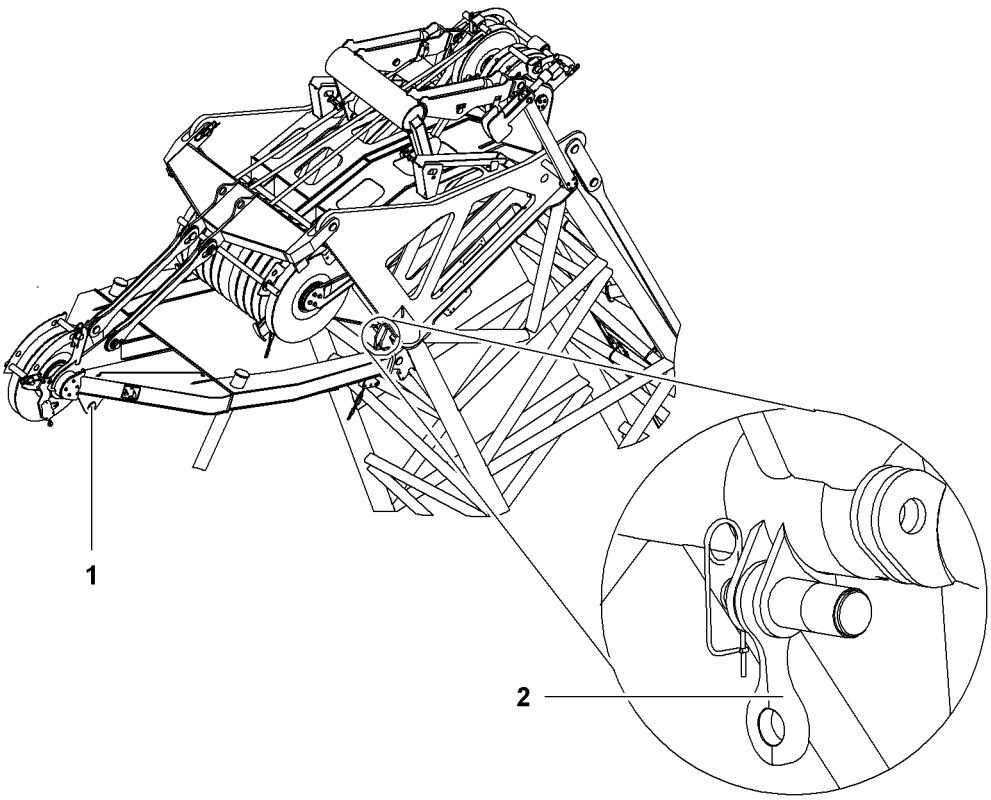

Fig. 3223: Pinning the cross strap to the boom head section

1 Auxiliary jib rope fixing point **2** Cross strap and pins

NOTICE
Cross strap and pins **2** are not positioned correctly at the rope fixing point on the auxiliary jib **1** with 3-fold reeving!
Risk of damage to winch2 rope.

▶ Pin the cross strap to the boom head section.

▶ Remove the cross strap and pins **2** from the rope fixing point of the auxiliary jib **1**.

▶ Pin the cross strap **2** to the boom head section.

7.6.24 Connect the electric cables

NOTICE
Electric cables have been handled incorrectly!
Damage to electric cable and plug.

▶ Do not pull the electric cable over sharp-edged objects.

▶ Do not crush or kink the electric cable.

▶ Keep the plug clean.

▶ Disconnect both electric cables from the terminal box on the boom base section.

LWN/LR.x/V03.01//Auslieferung/2015-06-03/en

copyright by
LIEBHERR

NOTICE
Electric cable has been unwound incorrectly!
Electric cable may be damaged.

- ▶ Push the electric cable in the cable drum into the side opening of the cable drum.

- ▶ Loosen the pin on the axle of the cable drum.
- ▶ Unwind the electric cable from the cable drum and pull it inside the main boom to the boom head section.
- ▶ Connect the electric cable to the terminal box on the boom head section and secure using retaining clips.

Two fixing holes are provided under the terminal box to relieve the strain on the plug.

- ▶ Clip both carabiners on the cable sock into the fixing holes.
- ▶ Fix the pin on the axle of the cable drum.
- ▶ Reconnect the electric cable in the cable drum to the terminal box on the boom base section.
  - ▷ The boom base section and boom head section electric cables are connected.

If an auxiliary jib is fitted:
- ▶ Plug the auxiliary jib electric cable into the boom head section.

7.6.25 Installing the obstacle warning light

Note
Use of the obstacle warning light is prescribed by national or regional regulations!

- ▶ Before using the machine, familiarise yourself with national and local regulations.

Ensure that the following conditions are fulfilled:
- ❑ Anemometer is not installed.

LWN/LR.x/V03.01//Auslieferung/2015-06-03/en

copyright by
LIEBHERR

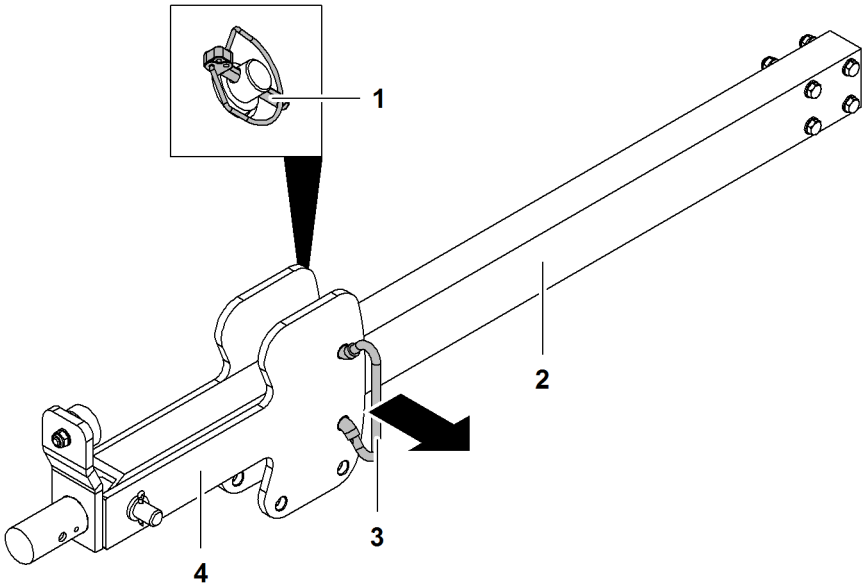

Fig. 3224: Moving the pendulum into the working position

1	Linchpins (2x)	**3**	Locking element
2	Mount	**4**	Pendulum

The pendulum **4** is secured on the mount **2** for machine transport.

- ▶ Remove the linchpin **1** of the locking element **3**.
- ▶ Remove **3** locking element.
- ▶ Swing pendulum **4** down.
- ▶ Slide locking element **3** through pendulum **4** and secure with linchpins **1**.

LWN/LR.x/V03.01//Auslieferung/2015-06-03/en

copyright by
LIEBHERR

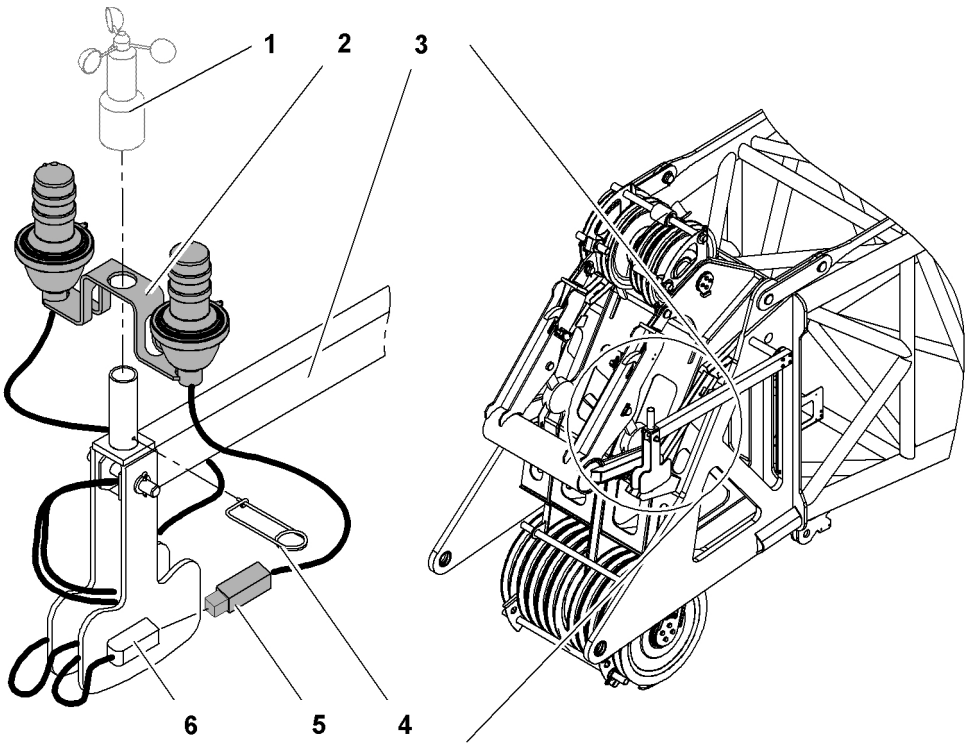

Fig. 3225: Installing the obstacle warning light

1	Anemometer	**4**	Safety pin
2	Obstacle warning light	**5**	Plug
3	Mount	**6**	Coupling

▶ Place obstacle warning light **2** on pipe.
  ▷ Obstacle warning light is secured by the pipe and axis on the bracket **3**.

NOTICE
Safety pin is not fit properly!
Damage to the electric cable.

▶ Insert the safety pin carefully.

▶ Insert the safety pin **4**.
  ▷ Obstacle warning light **2** is secured.

▶ Connect the plug **5** to the coupling **6**.

▶ Lock plug **5**.

7.6.26 Fitting the anemometer

Ensure that the following conditions are fulfilled:

❑ Obstacle warning light is installed (if available).

LWN/LR.x/V03.01//Auslieferung/2015-06-03/en

copyright by
LIEBHERR

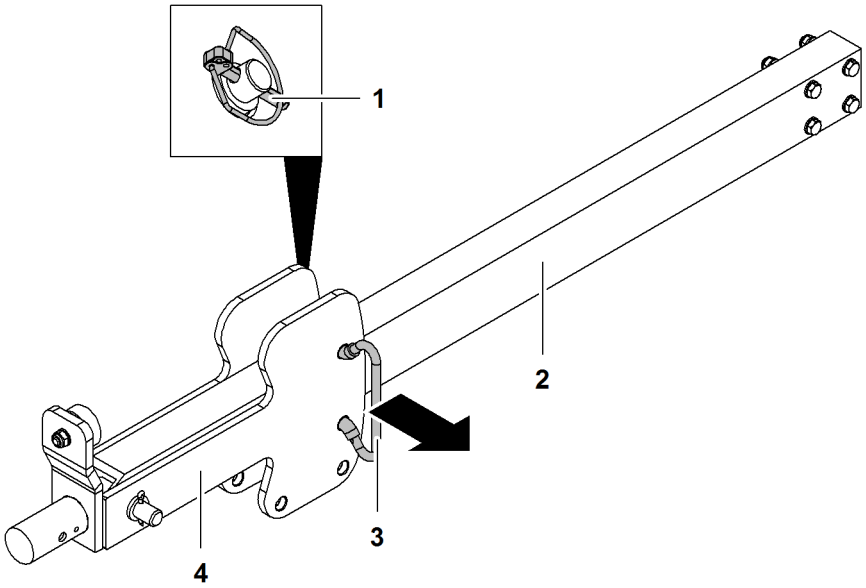

Fig. 3226: Moving the pendulum into the working position

1	Linchpins (2x)	**3**	Locking element
2	Mount	**4**	Pendulum

The pendulum **4** is secured on the mount **2** for machine transport.

- ▶ Remove the linchpin **1** of the locking element **3**.
- ▶ Remove **3** locking element.
- ▶ Swing pendulum **4** down.
- ▶ Slide locking element **3** through pendulum **4** and secure with linchpins **1**.

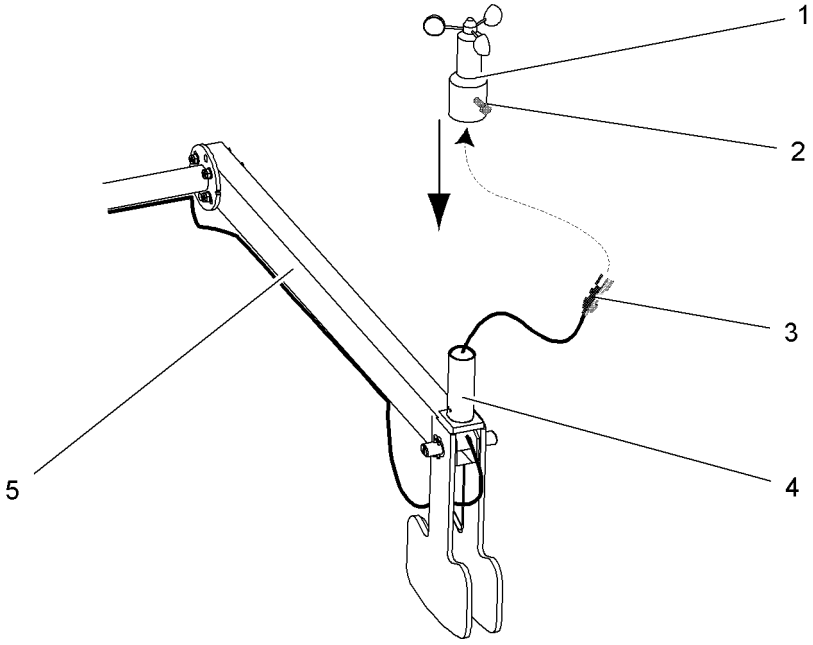

Fig. 3227: Fitting the anemometer

1	Anemometer	**4**	Tube
2	Screw	**5**	Mount
3	Plug		

LWN/LR.x/V03.01//Auslieferung/2015-06-03/en

copyright by
LIEBHERR

- ▶ Remove cover from the plug **3**.
- ▶ Plug in the connector **3** at the bottom of the anemometer **1**.
- ▶ Secure plug **3** with nut.

NOTICE
Anemometer is not fit properly!
Damage to the electric cable.

- ▶ Pull the extended electric cable through the tube before pushing on the anemometer.

- ▶ Position the anemometer **1** on the tube **4**.
- ▶ Securing the anemometer on the mount: Tighten the screw **2**.

The rotor of the anemometer must be free to rotate slightly.

- ▶ Test the anemometer: rotate the rotor slightly and note the value on the monitor.
  ▷ The wind speed value will increase.

7.6.27 Moving the lightning rods* into working position

Installation positions of lightning rods on main boom head

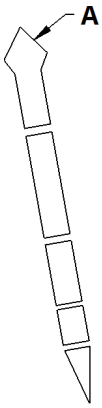

Fig. 3228: Installation positions of lightning rods on main boom head

A Main boom head

Boom configuration	Number of lightning rods	Installation positions
Main boom	1	A

Tab. 471: Installation positions and number of lightning rods on main boom head

LWN/LR.x/V03.01//Auslieferung/2015-06-03/en

copyright by
LIEBHERR

Moving the lightning rods* on the main boom head into working position

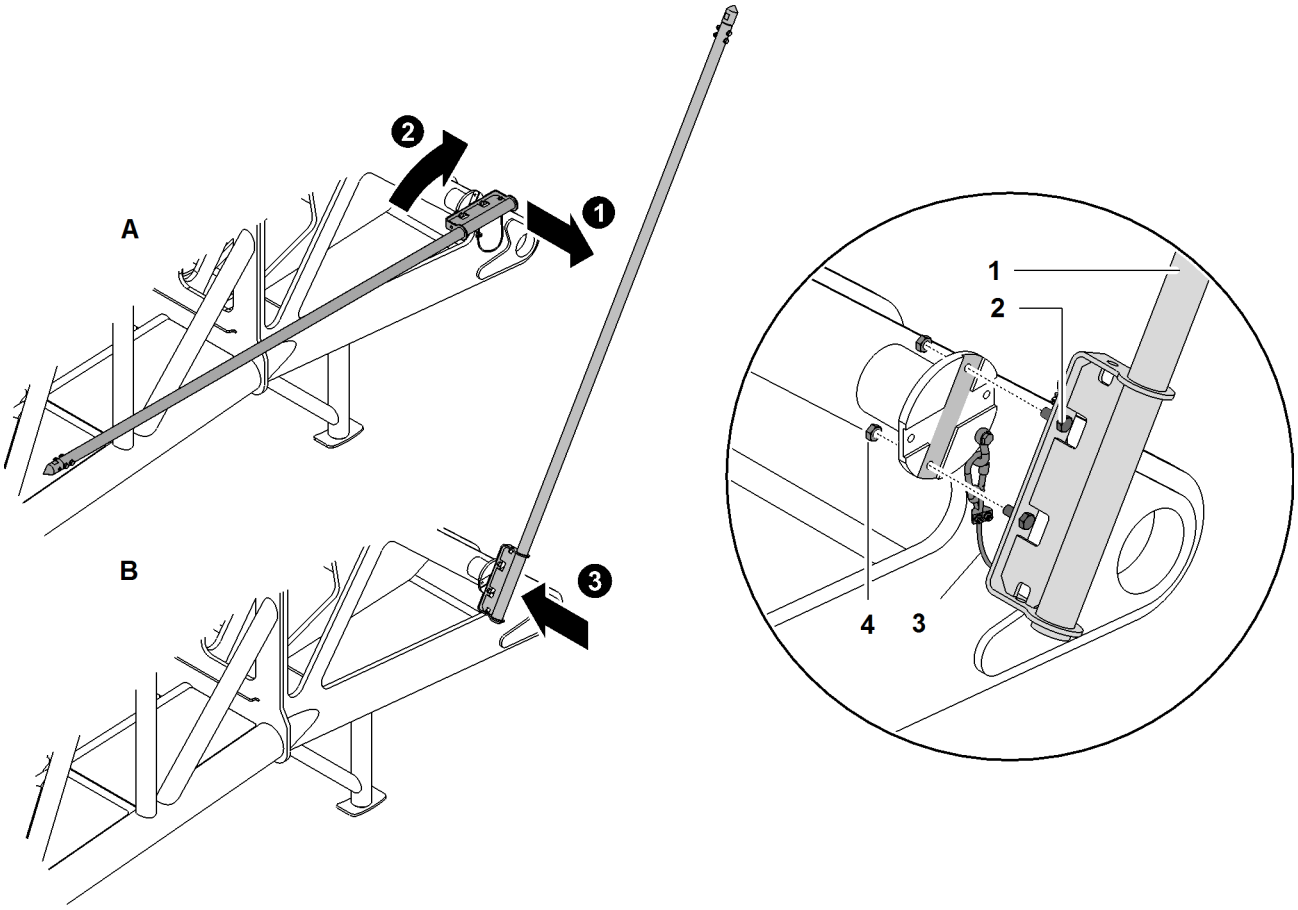

Fig. 3229: Moving the lightning rods on the main boom head into working position (illustration of principle)*

A	Transport position	**1**	Lightning rod	**3**	Safety rope
B	Working position	**2**	Screw (2x)	**4**	Nut (2x)

- ▶ Undo safety rope **3**.
- ▶ Undo nuts **4**.
- ▶ Undo screws **2**.
- ▶ Move lightning rod **1** from transport position **A** to working position **B**.

Note
Liebherr recommends:

- ▶ Grease threads of the screws **2**.

- ▶ Attach lighting rod **1** withscrews **2**.
- ▶ Lock screws **2** with nuts **4**.

NOTICE
Safety rope not attached!
Dropping parts.

- ▶ Ensure that safety rope **3** is attached.

LWN/LR.x/V03.01//Auslieferung/2015-06-03/en

copyright by
LIEBHERR

▶ Attach safety rope **3**.

NOTICE
Tip not installed!
Improperly deflected current.
Dropping parts.

▶ Ensure that the tip on the lightning rod **1** is installed.

▶ Ensure that the screws of the tip are tightened.

▶ Ensure that the tip on the lightning rod **1** is installed.

▶ Ensure that the screws of the tip are tightened.

7.6.28 Reeving the rope

The rope must be reeved as specified in the rope reeving diagram according to the boom and application requirements.

WARNING
Unsecured walking on the boom!
Risk of falling off the boom.

▶ A fall arrest system must be worn when working on the boom to prevent falling.

Ensure that the following conditions are satisfied:
❑ Cylinder adjustment functions are on.

LWN/LR.x/V03.01//Auslieferung/2015-06-03/en

copyright by
LIEBHERR

Reeving the rope using a rope reeving winch

Dismantling rope protection pipes

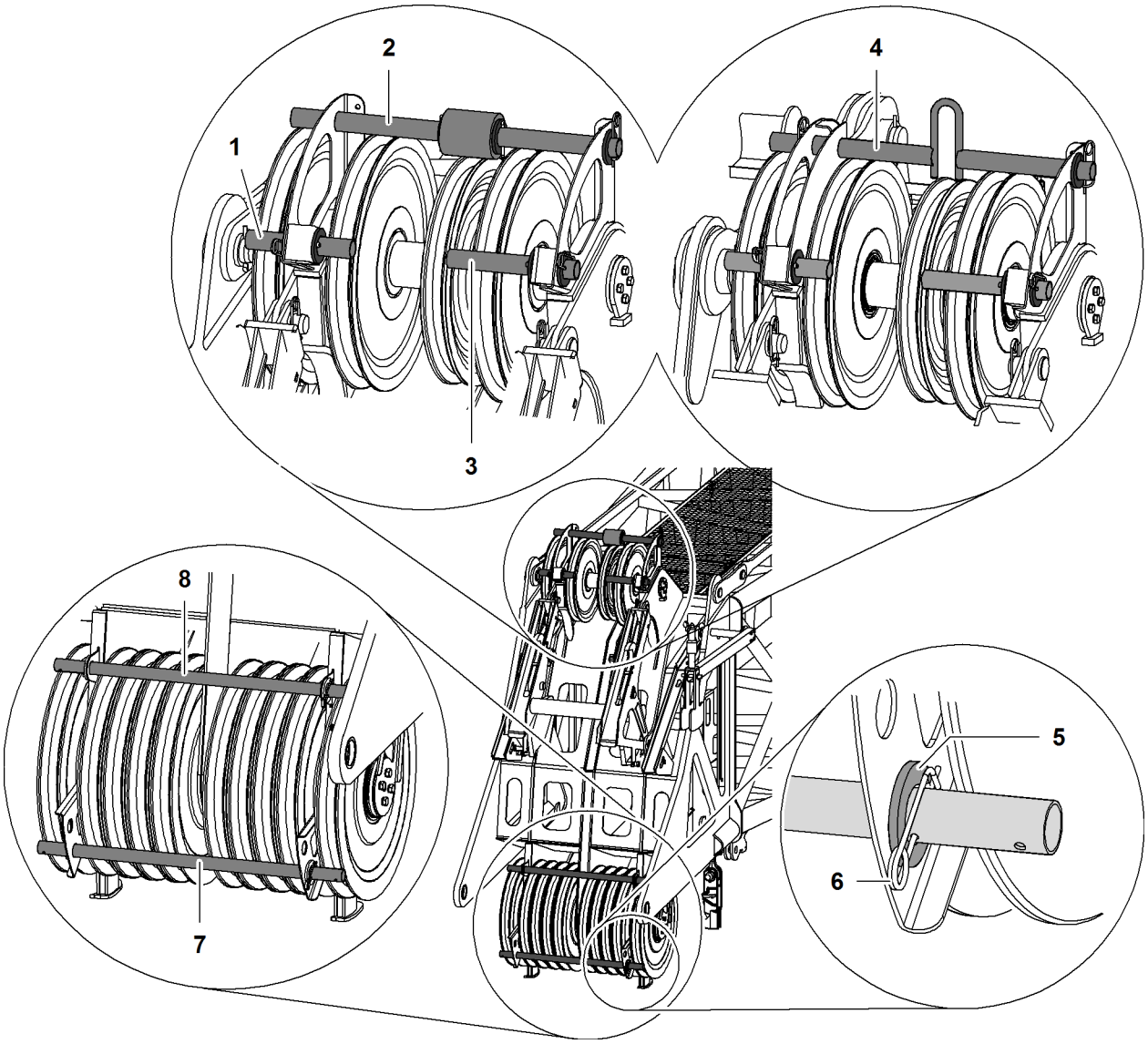

Fig. 3230: Rope protection pipes main boom head 1311, 2017, 2018, 2320, 2220, 2821

1	Rope protection pipe	**4**	Rope protection pipe variant2	**7**	Rope protection pipe
2	Rope protection pipe variant1	**5**	Washer	**8**	Rope protection pipe
3	Rope protection pipe	**6**	Safety pin		

The rope protection pipes are secured with a cotter pin on one side and with a safety pin on the other side.

▶ Remove the safety pins **6** and the washers **5**.

▶ Remove the rope protection pipes **1 + 2 + 3 + 4 + 7 + 8**.

LWN/LR.x/V03.01//Auslieferung/2015-06-03/en

copyright by
LIEBHERR

Removing the rope protection pipes on auxiliary jib

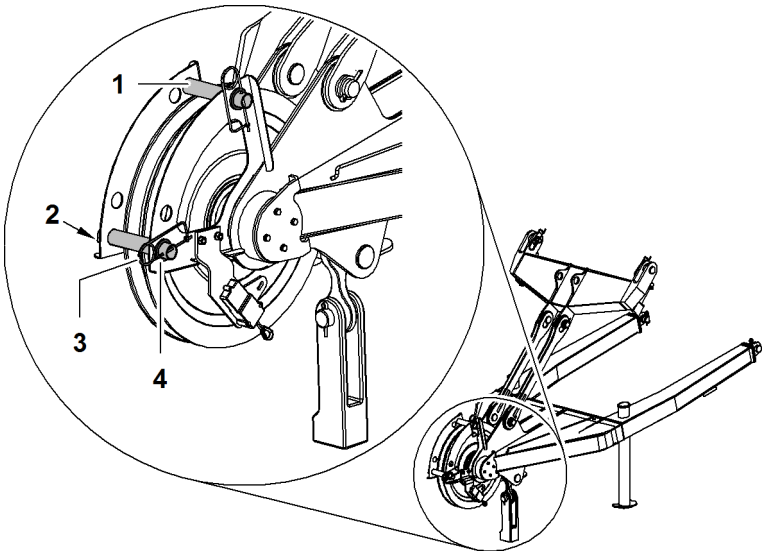

Fig. 3231: Removing the rope protection pipes on auxiliary jib

1	Rope protection pipe (2x)	**3**	Safety pin
2	Cotter pin	**4**	Washer

The rope protection pipes are secured with a cotter pin **2** on one side and with a safety pin **3** on the other side.

▶ Remove rope protection pipes **1** with attached auxiliary jib.

Reeving the rope

▶ Open up the rope guide (if present).

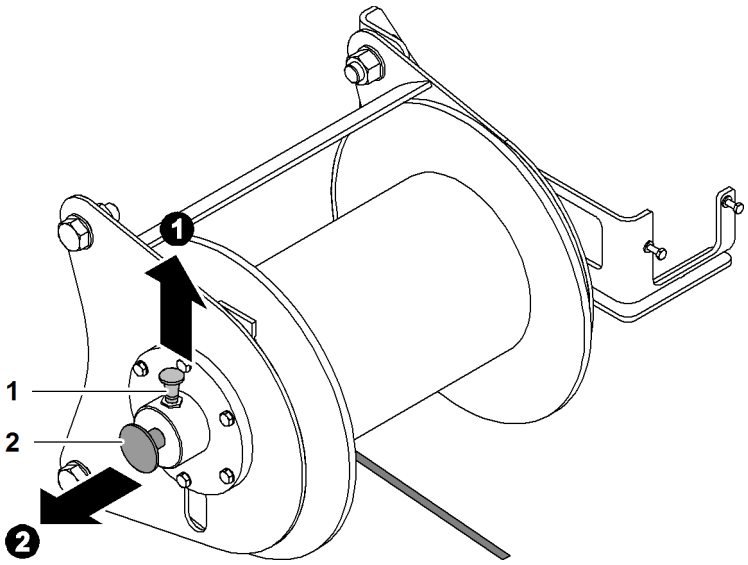

Fig. 3232: Setting the rope lug to free-wheel

1	Securing element	**2**	Shaft

LWN/LR.x/V03.01//Auslieferung/2015-06-03/en

Note

Liebherr recommends:

▶ Making it easier to pull out the axle **2**: move the rope reeving winch manually back and forth.

▶ Pull up the locking element **1** and pull out the axle **2** at the same time.
▷ Rope reeving winch is set to free-wheel.

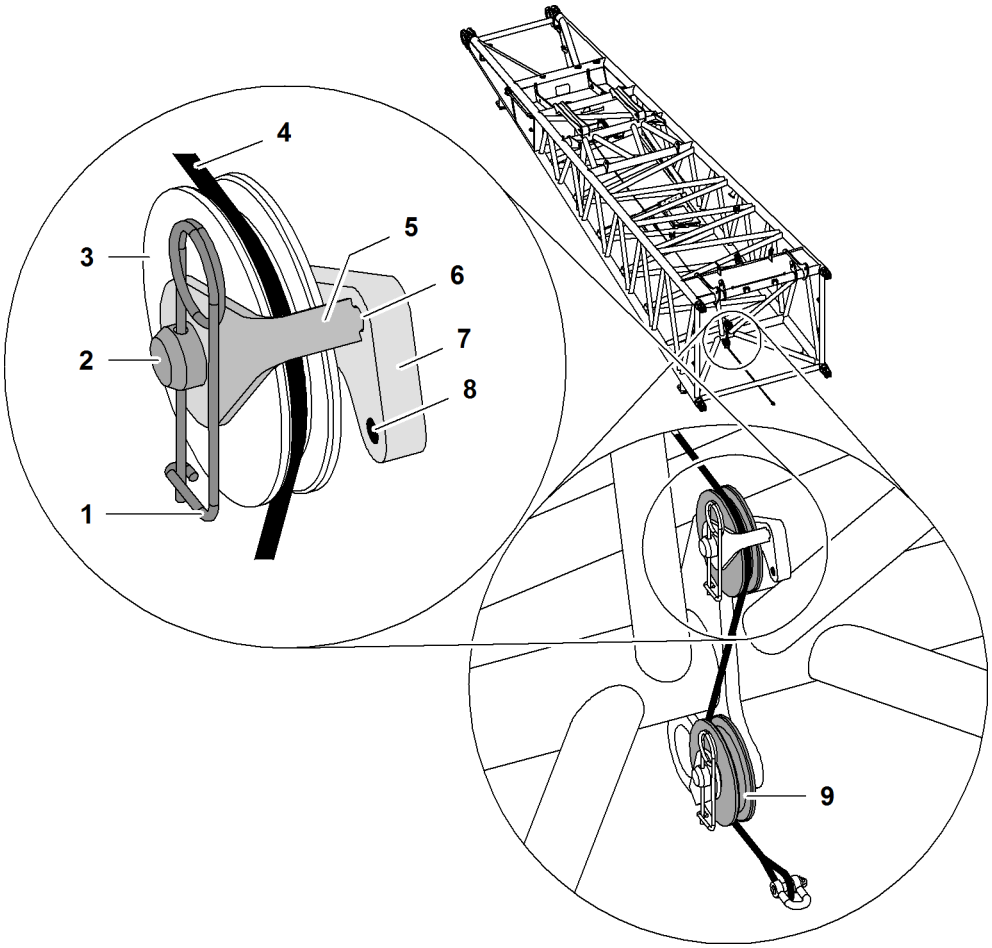

Fig. 3233: Reeving in the luffing rope of the rope reeving winch

1	Safety pin	**6**	Recess
2	Shaft	**7**	Support with recesses
3	Upper pulley	**8**	Recess
4	Rope of the rope reeving winch	**9**	Lower pulley
5	Locking element		

Depending on the machine type, the mounting **7** may have one or two recesses.

▶ Remove safety pins **1**.

▶ Remove **5** securing element.

▶ Place rope of the rope reeving winch **4** across the top pulley **3**.

NOTICE
Wrongly mounted locking element!
Rope of the rope reeving winch jumps out of pulley.

▶ Make sure that the locking element **5** is mounted in recess **6**.

LWN/LR.x/V03.01//Auslieferung/2015-06-03/en

copyright by
LIEBHERR

- ▶ Attach locking element **5** to axle **2** and guide in recess **6**.
- ▶ Attach the safety pin **1**.
- ▶ Repeat procedure on bottom pulley **9**.
  - ▷ Rope of the rope reeving winch is guided through pulleys.
- ▶ Pull the luffing rope under the boom to the boom head.
- ▶ Reeve in the rope of the rope reeving winch according to reeving plan.
- ▶ Pull the luffing rope next to the boom towards the basic machine.
- ▶ Lift luffing rope onto boom.
- ▶ Connect luffing rope with rope of winch1/winch2.

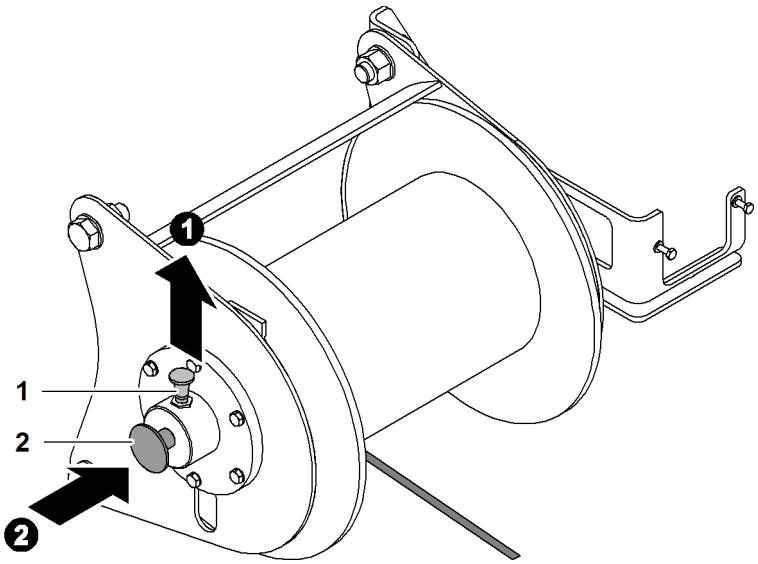

Fig. 3234: Stopping the free-wheel of the rope reeving winch

1 Locking element **2** Shaft

Note

Liebherr recommends:

- ▶ Making it easier to press in the axle **2**: move the rope reeving winch manually back and forth.

- ▶ Pull up the locking element **1** and press in the axle **2** at the same time.
  - ▷ Free-wheel of the luffing rope is deactivated.

WARNING

Never stand in the immediate vicinity of the rope reeving winch or the luffing rope!

- ▶ Make sure that no-one is standing in the danger area.
- ▶ Leave the danger area.

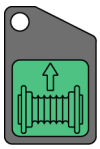

- ▶ Press and hold the *Rope reeving winch* button on control panel *X11*.
  - ▷ Rope reeving winch reeves in the rope of the rope reeving winch and tensions the rope of winch1/winch2.

LWN/LR.x/V03.01//Auslieferung/2015-06-03/en

copyright by LIEBHERR

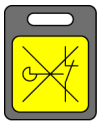

If rope of winch1/winch2 is in the 8th rope layer (only with free-fall winch 130 kN (29,230 lb_f)):

- ▶ Press the *Bypass limit switch* button on control panel *X23*.
  - ▷ The 3-rope windings limit switch is bypassed.

There must be no slacking of the rope when unwinding.

- ▶ Unwind the rope of winch1/winch2 up to the rope fixing point.
- ▶ Press the *Rope reeving winch* button on control panel *X11*.
  - ▷ Rope reeving winch switched off.
- ▶ Remove rope of the rope reeving winch from the rope of winch1/winch2.

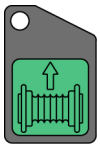

- ▶ Press and hold the *Rope reeving winch* button on control panel *X11*.
  - ▷ Luffing rope is being reeved.
- ▶ Press the *Rope reeving winch* button on control panel *X11*.
  - ▷ Rope reeving winch switched off.
- ▶ Close and secure the rope guide (if present).

Mounting rope protection pipes on main boom head

- ▶ Mount and secure rope protection pipes.

LWN/LR.x/V03.01//Auslieferung/2015-06-03/en

copyright by
LIEBHERR

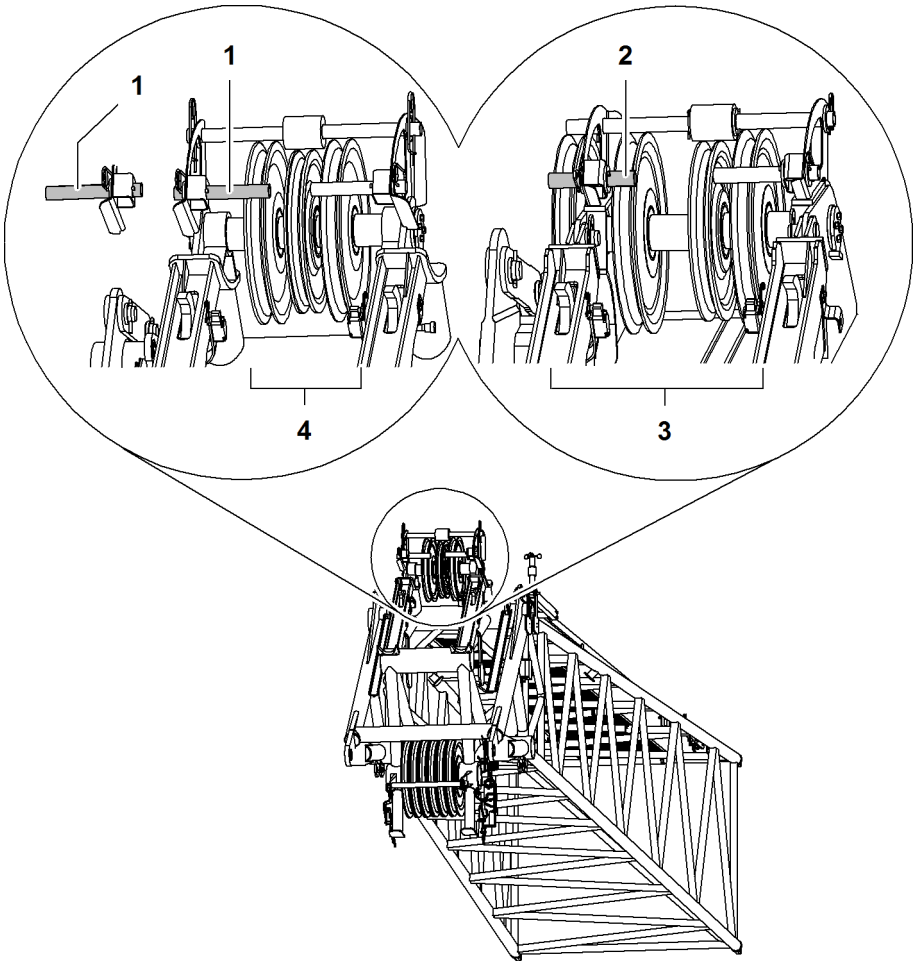

Fig. 3238: Rope protection pipe main boom head section with mounted fixed jib

1	Rope protection pipe	**3**	Main boom head with four gantry pulleys
2	Rope protection pipe	**4**	Main boom head with three gantry pulleys

NOTICE
Inadmissible rope protection pipe with mounted fixed jib!
Rope scrapes on rope protection pipe.
Damage to rope.

▶ Remove rope protection pipe **1 + 2**.

If a fixed jib is being mounted:

▶ Remove rope protection pipe **2** on main boom head.
or

Rotate rope protection pipe **1** by 180° and mount facing outwards.

LWN/LR.x/V03.01//Auslieferung/2015-06-03/en

copyright by
LIEBHERR

Fitting the rope protection pipes to the auxiliary jib

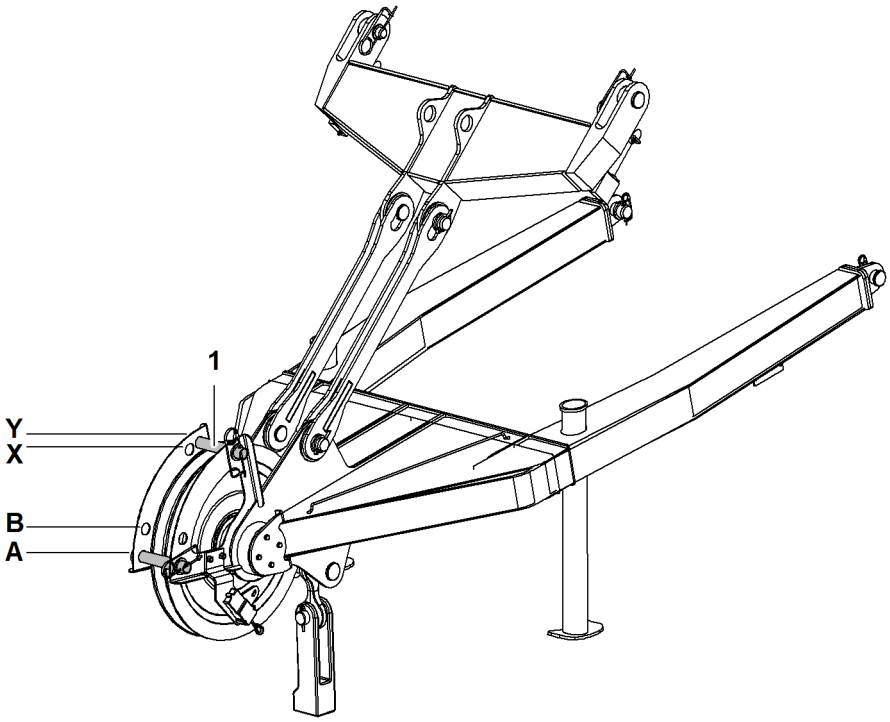

Fig. 3239: Fitting the rope protection pipes to the auxiliary jib

1 Rope protection pipe (2x)
A Assembly position A for rope protection pipe
B Assembly position B for rope protection pipe
X Assembly position X for rope protection pipe
Y Assembly position Y for rope protection pipe

Assembly positions of the rope protection pipes on the auxiliary jib depending on the main boom angle:

Machine type	Main boom angle		
	15° to 30°	20° to 30°	30° to 86°
LR 1001	B + X	-	A + Y
LR 1002	B + X	-	A + Y
LR 1003	B + X	-	A + Y
LR 1004	-	B + X	A + X
LR 1006	-	B + X	A + X

Tab. 472: Assembly positions for rope protection pipes on the auxiliary jib (36 t (79.300 lb)) for main boom head

▶ Mount rope protection pipes on auxiliary jib according to chart.

Reeving the rope without using a rope reeving winch

▶ Remove the rope protection pipes on the boom and the pulley block.

▶ Open up the rope guide (if present).

LWN/LR.x/V03.01//Auslieferung/2015-06-03/en

copyright by LIEBHERR

- ▶ Connect auxiliary rope with the rope of winch1/winch2.
- ▶ Pull the auxiliary rope next to the boom as far as the boom head.
- ▶ Hoist the auxiliary rope onto the boom.
- ▶ Reeve the auxiliary rope according to the rope reeving system.

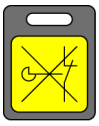

If rope of winch1/winch2 is in the 8th rope layer (only with free-fall winch 130 kN (29,230 lb_f)):

- ▶ Press the *Bypass limit switch* button on control panel *X23*.
  - ▷ The 3-rope windings limit switch is bypassed.

There must be no slacking of the rope when unwinding.

- ▶ Unwind the rope of winch1/winch2 up to the rope fixing point.
- ▶ Remove auxiliary rope from the rope of winch1/winch2.
- ▶ Close and secure the rope guide (if present).
- ▶ Mount and secure rope protection pipes.

7.6.29 Attaching the rope fixing point

DANGER
Incorrect installation of pins and pocket lock!
Load breakaway.

- ▶ Fit pins and pocket lock as instructed.

The collar of the pins and the pocket lock openings are decisive for the installation direction of the rope fixing point.

LWN/LR.x/V03.01//Auslieferung/2015-06-03/en

copyright by
LIEBHERR

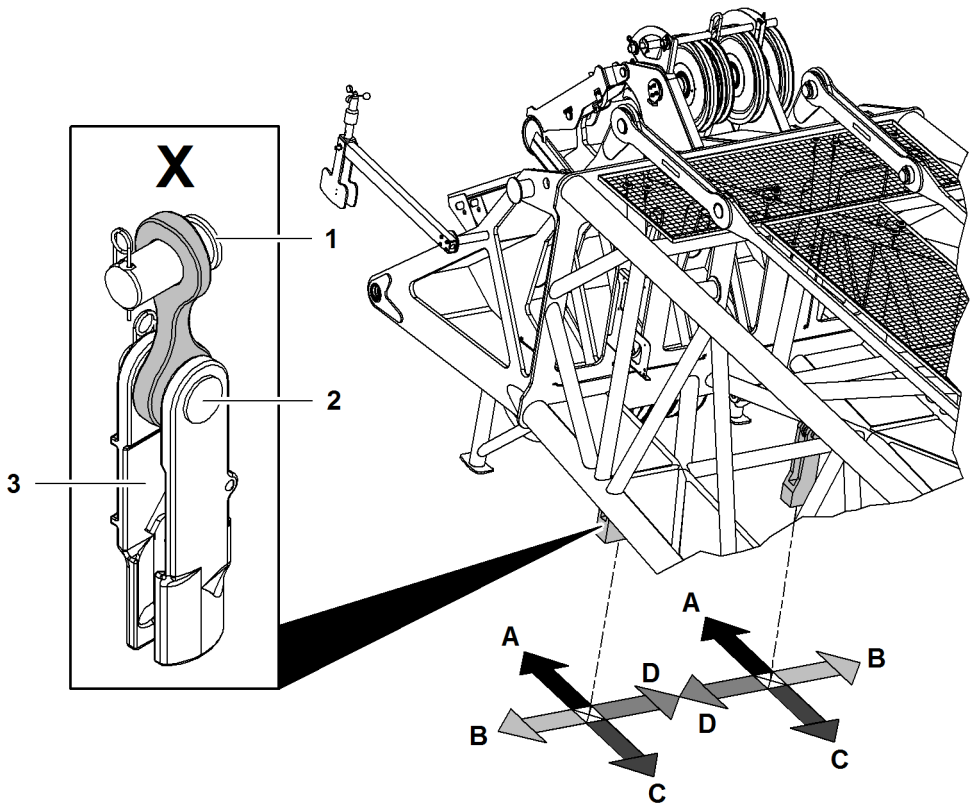

Fig. 3241: Determining the installation direction of the components of the rope fixing point of relevance for installation - main boom head (illustration of principle)

X	Components needed for fitting	**A**	Direction main boom head
1	Shoulder of pin on the boom	**B**	Outside
2	Shoulder of pin on the pocket lock	**C**	Direction basic machine
3	Pocket lock opening	**D**	Inside

LWN/LR.x/V03.01//Auslieferung/2015-06-03/en

copyright by
LIEBHERR

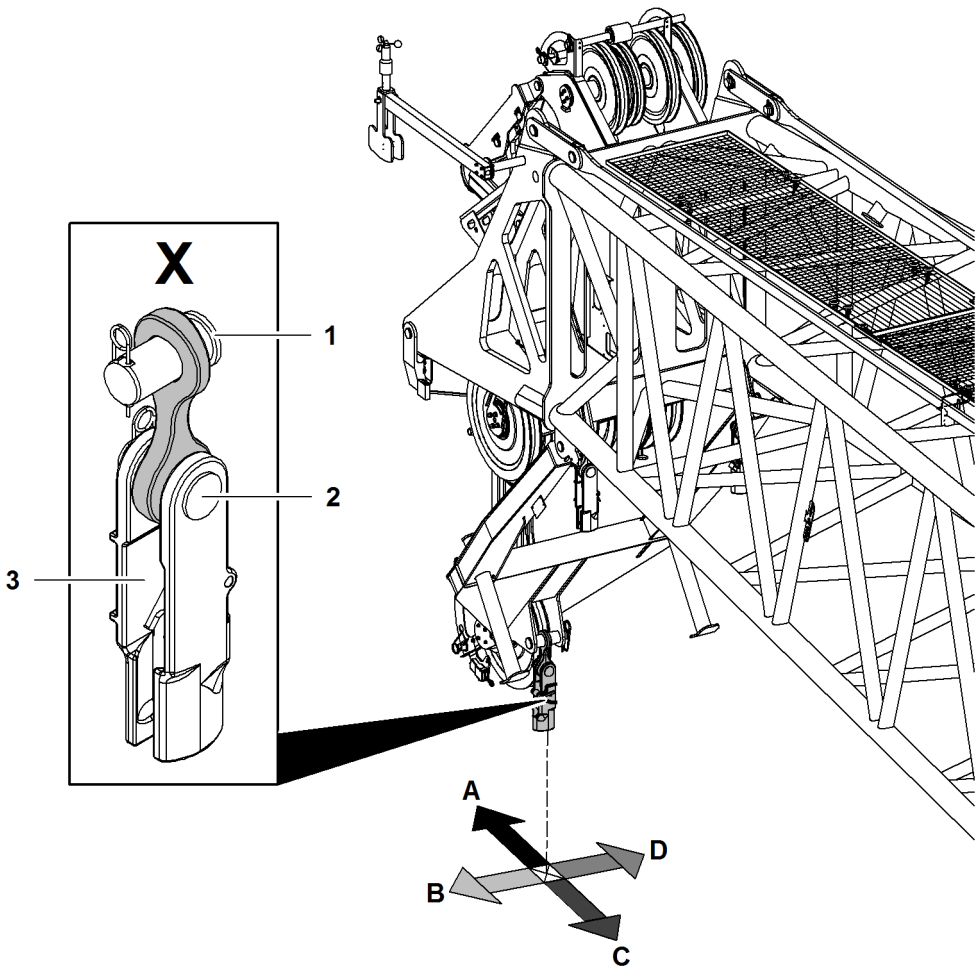

Fig. 3242: Determining the installation direction of the components of the rope fixing point of relevance for installation - auxiliary jib (illustration of principle)

X	Components needed for fitting	**A**	Direction main boom head
1	Shoulder of pin on the boom	**B**	Outside
2	Shoulder of pin on the pocket lock	**C**	Direction basic machine
3	Pocket lock opening	**D**	Inside

Installation direction of the rope fixing point components of relevance for installation			
	Pin collar on boom	**Pin collar on pocket lock**	**Pocket lock opening**
All rope fixing points	D	C	B
Exceptions:			
Fixed jib head 0906	B	C	B
Fixed jib head 1507	B	C	B

Tab. 473: Installation direction of the rope fixing point components of relevance for installation

WARNING
Incorrectly fit swivels!
Severe injuries, damage to machine.

- ▶ Fit rope with no twists.
- ▶ Install the rope without swivels.

LWN/LR.x/V03.01//Auslieferung/2015-06-03/en

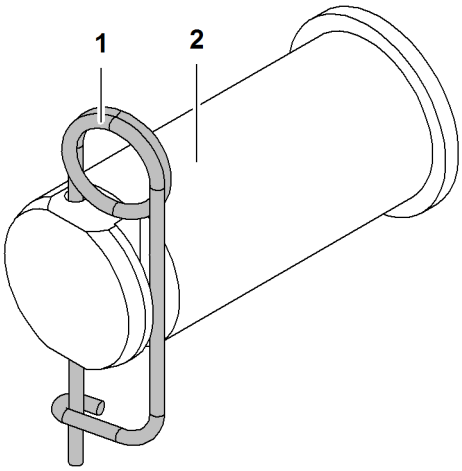

Fig. 3243: Securing the pins

1 Locking spring **2** Pin

DANGER
Pins **2** not completely secured!
Load breakaway.

▶ Ensure that locking spring **1** completely secures the pin **2**.

Installing the rope fixing point on the boom head

▶ Pin cross strap with boom head.

▶ Secure pin with locking spring.

▶ Pin pocket lock with cross strap.

▶ Secure pin with locking spring.

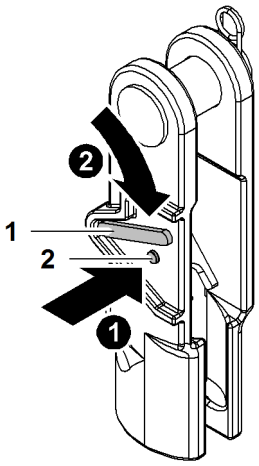

Fig. 3244: Unlocking the pocket lock

1 Safety latch **2** Locking button

▶ Press the locking button **2**.

▶ Press safety latch **1** down and hold.

LWN/LR.x/V03.01//Auslieferung/2015-06-03/en

copyright by
LIEBHERR

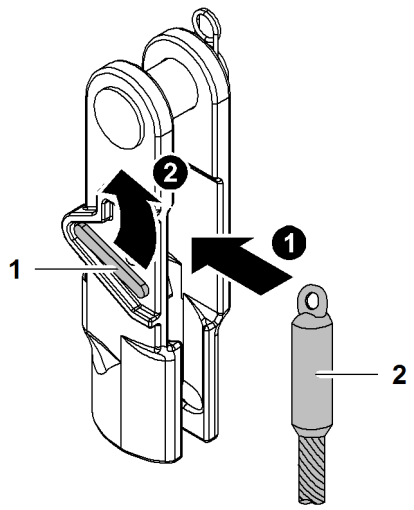

Fig. 3245: Inserting the end of rope into pocket lock and locking the pocket lock

1 Safety latch **2** End of rope

▶ Insert end of rope **2** in pocket lock.

DANGER
End of rope **2** not properly secured!
Load breakaway.

▶ Ensure that the safety latch **1** engages.

▶ Let go of safety latch **1**.
▷ Safety latch **1** engages.

Installing the rope fixing point on the hook or pulley block

▶ Pin pocket lock with hook or pulley block.

▶ Secure pin with locking spring.

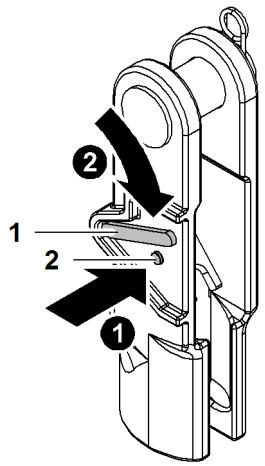

Fig. 3246: Unlocking the pocket lock

1 Safety latch **2** Locking button

▶ Press the locking button **2**.

LWN/LR.x/V03.01//Auslieferung/2015-06-03/en

copyright by
LIEBHERR

▶ Press safety latch **1** down and hold.

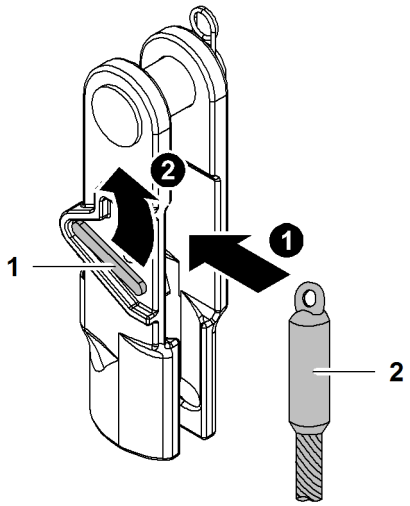

Fig. 3247: Inserting the end of rope into pocket lock and locking the pocket lock

1 Safety latch **2** End of rope

▶ Insert end of rope **2** in pocket lock.

DANGER
End of rope **2** not properly secured!
Load breakaway.

▶ Ensure that the safety latch **1** engages.

▶ Let go of safety latch **1**.
▷ Safety latch **1** engages.

7.6.30 Installing the hoist limit switch weight

NOTICE
Improper installation of the hoist limit switch weight!
Damage to the rope and hoist limit switch weight.

▶ Fit the hoist limit switch weight with no diagonal pull.

▶ Always install the hoist limit switch weight on the slack rope of winch1/winch2, except with simple reeving.

LWN/LR.x/V03.01//Auslieferung/2015-06-03/en

copyright by
LIEBHERR

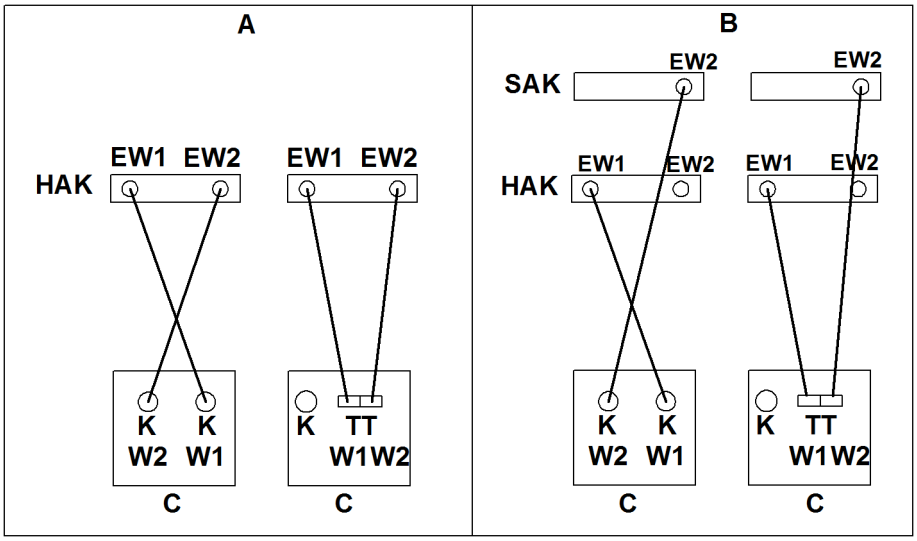

Fig. 3248: Hoist limit switch assignment in dependence on winch1/winch2

A Boom configuration main boom
B Boom configuration main boom + jib head member
C Cabin
EW1 Hoist limit switch winch1
EW2 Hoist limit switch winch2
HAK Main boom head section
K Joystick
SAK Auxiliary jib
TT Double T-control lever
W1 winch1
W2 winch2

NOTICE
Wrong hoist limit switch!
Hoist limit switch does not turn off.

▶ Make sure that the correct hoist limit switch for the correct rope of winch1/winch2 is used.

The hoist limit switch with chain and hoist limit switch weight attached is secured to the inoperative end of the hoist rope.

LWN/LR.x/V03.01//Auslieferung/2015-06-03/en

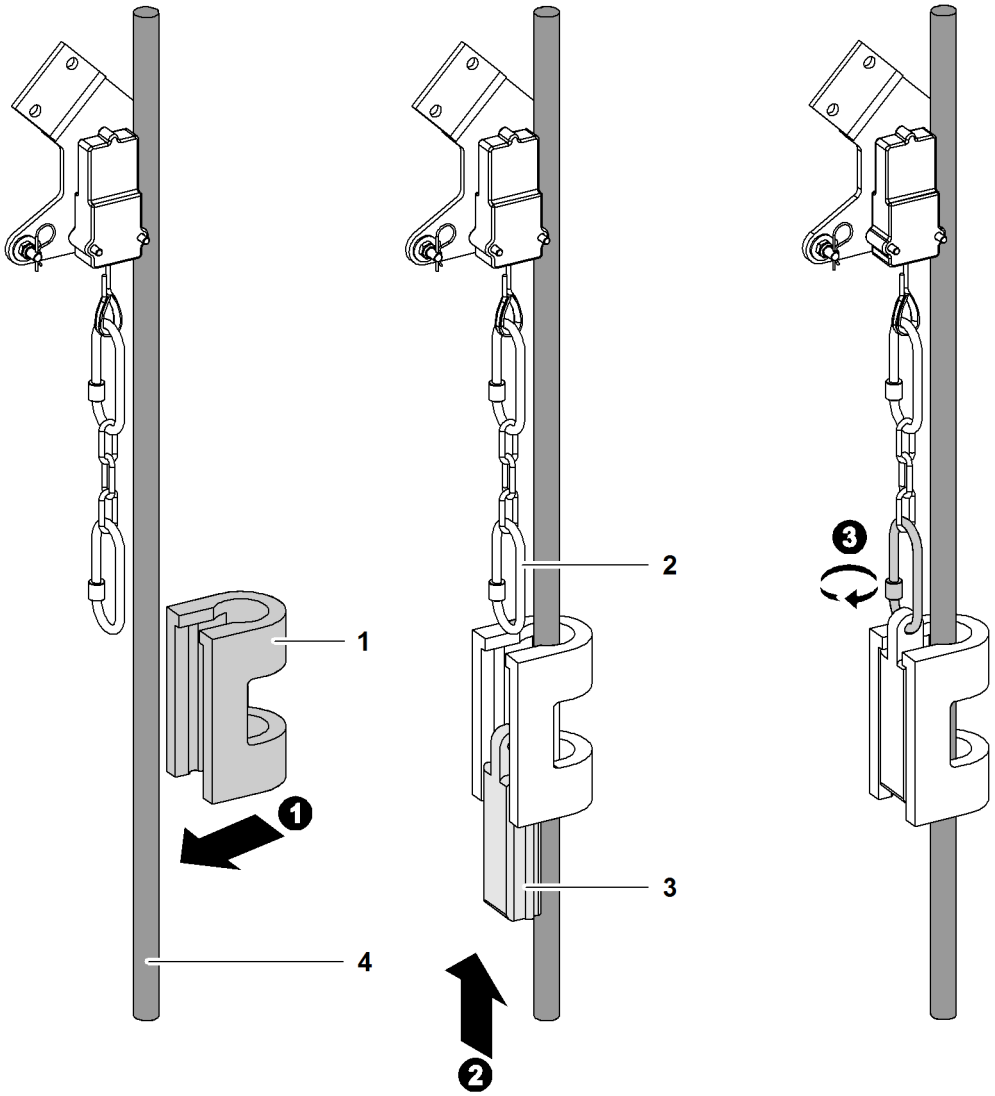

Fig. 3249: Fitting the hoist limit switch weight

1	Hoist limit switch weight (U shape)	**3**	Hoist limit switch weight (wedge)
2	Carabiner	**4**	Rope of winch1/winch2

▶ Guide the hoist limit switch weight (U shape) **1** over the rope of winch1/winch2 **4**.

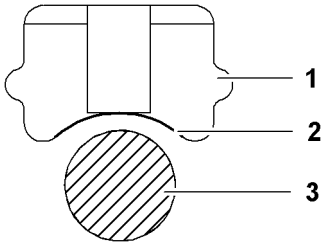

Fig. 3250: Hoist limit switch weight (wedge) view from above

1	Hoist limit switch weight (wedge)	**3**	Rope of winch1/winch2
2	Curvature		

The hoist limit switch weight (wedge) **1** has a curvature **2** on one side.

LWN/LR.x/V03.01//Auslieferung/2015-06-03/en

copyright by
LIEBHERR

NOTICE
Wrongly installed hoist limit switch weight (wedge)!
Hoist limit switch weight (wedge) damaged with wrong installation of rope of winch1/winch2.

- ▶ Make sure that the curvature of the hoist limit switch weight (wedge) is installed in the direction of the rope of winch1/winch2.

- ▶ Insert the hoist limit switch weight (wedge) **1** from below into the hoist limit switch weight (U shape).
- ▶ Attach the carabiner to the hoist limit switch weight (wedge) **1**.

Note

Liebherr recommends:
- ▶ visual inspection of the carabiner hook prior to installation.
- ▶ Clean dirty carabiner hook with a clean cloth and water.
- ▶ If necessary, re-clean with a slightly oily cloth.

NOTICE
Improper installation of carabiner!
Damage to machine.

- ▶ Make sure that the screw of the carabiner points downwards.
- ▶ Make sure that the securing element is twisted shut.

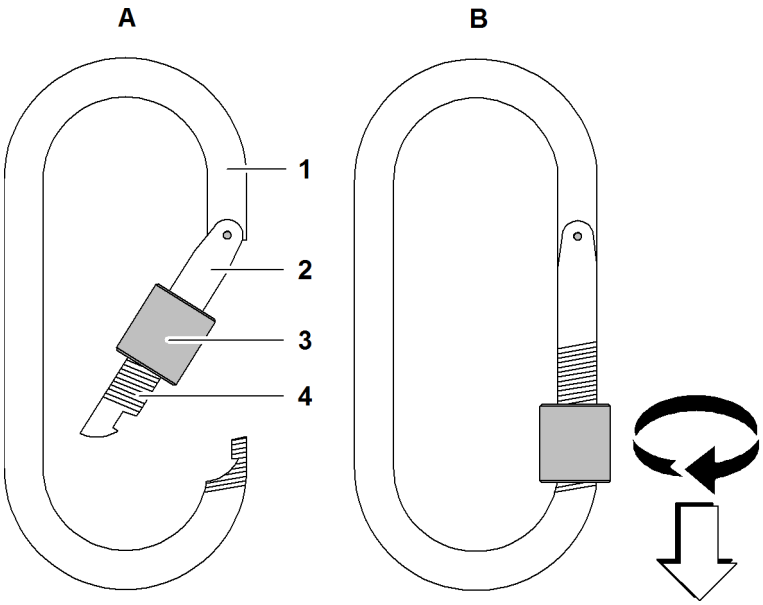

Fig. 3251: Carabiner

1	Carabiner	**4**	Thread
2	Snapper	**A**	Opened carabiner
3	Securing element	**B**	Closed carabiner

- ▶ Secure carabiner **1** with securing element **3**.

LWN/LR.x/V03.01//Auslieferung/2015-06-03/en

NOTICE
The chain on the hoist limit switch weight is too short!
The hoist limit switch weight responds too late. The hook damages the boom head.

▶ Ensure that hoist limit switch weight chain is at least 3 m (9‘ 10“ ft-in) and at most 4.5 m (14‘ 9“ ft-in) long.

▶ Attach the chain between the hoist limit switch weight and the hoist limit switch.

7.6.31 Bypass unused hoist limit switches.

DANGER
The hoist limit switch has been bypassed illegally!
Load breakaway.

▶ Only ever bypass unused hoist limit switches.

NOTICE
Wrong hoist limit switch is bypassed!
The hook damages the boom head.

▶ Lock winch 1 using the left hoist limit switch.

▶ Lock winch 2 using the right hoist limit switch.

Ensure that the following conditions are fulfilled:
❑ Only motion is performed with a rope of winch1/winch2. A hoist limit switch is not required.

LWN/LR.x/V03.01//Auslieferung/2015-06-03/en

copyright by
LIEBHERR

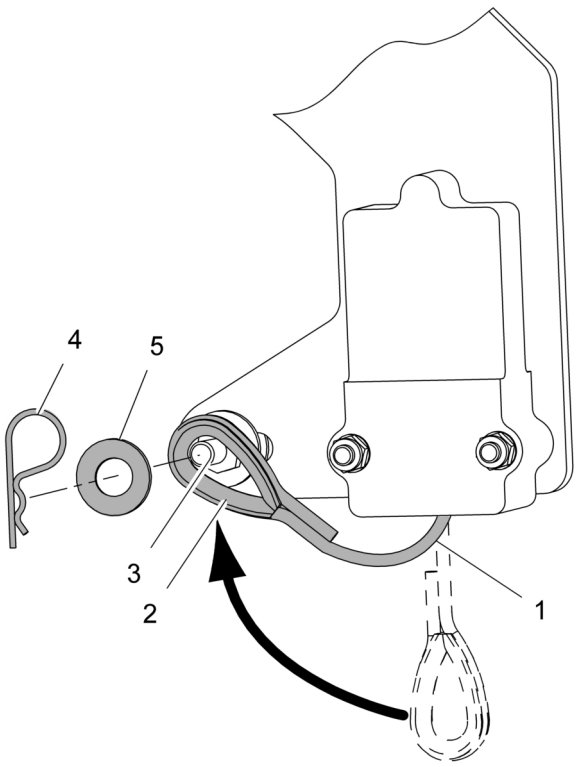

Fig. 3252: Bypassing the hoist limit switch mechanically

1	Steel rope	**4**	Safety pin
2	Loop	**5**	Washer
3	Stud bolt		

▶ Pull the steel rope **1** and place the loop **2**over the stud bolt **3**.
▷ Hoist limit switch is bypassed.

▶ Protect the sling **2** from slipping off the stud bolt **3** by securing it with a washer **5** and a safety pin **4**.

LWN/LR.x/V03.01//Auslieferung/2015-06-03/en

7.7 Erecting the main boom without derrick equipment*

7.7.1 Erecting the main boom

Ensure that the following conditions are fulfilled:
- ❑ Boom configuration can be erected with counterweight.
- ❑ Signalmen and assistants are instructed.
- ❑ All work on the main boom has been completed.
- ❑ No loose parts or tools have been left on the main boom.

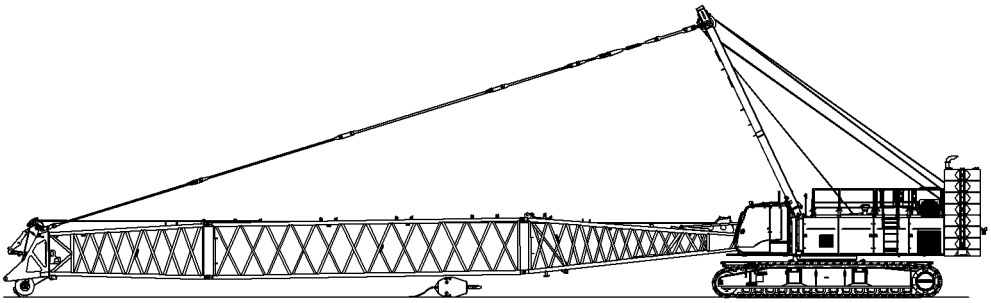

Fig. 3253: Main boom on the ground (illustration of principle)

DANGER
Hoist limit switch bypassed on control panel *X23* in crane mode!
Load breakaway.

▶ Only bypass hoist limit switch on control panel *X23* when assembling or disassembling the machine.

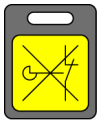

If hoist limit switch weight is on the ground:
▶ Press the *Bypass limit switch* button on control panel *X23*.
▷ Hoist limit switches are bypassed.

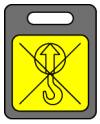

▶ Press the *Load moment limiter assembly/self-lock* button on control panel *X23*.

No load chart exist for machines geometry:
▷ Function “load moment limiter assembly” is active.
▷ The LED on the button *Load moment limiter assembly/self-lock* lights up.
▷ Machine functions are enabled unlimited.
▷ Load Moment Limiter lamps flash orange.

DANGER
Erectability chart is not followed!
Machine toppling over.

▶ Only lift the main boom when erection is permitted according to the erectability chart.

LWN/LR.x/V03.01//Auslieferung/2015-06-03/en

copyright by LIEBHERR

WARNING
Falling objects!
Severe injury.

- ▶ Any loose parts and tools must be removed from the main boom.
- ▶ Make sure that nobody is located in the danger zone.
- ▶ Leave the danger area.

- ▶ Lift main boom slowly.
  - ▷ The main boom pendant straps are tensioned.

WARNING
Dangerous voltage in main boom!
Sudden sideways movement when lifting main boom off the ground.

- ▶ Make sure that no-one is standing in the danger zone.
- ▶ Leave the danger zone.

- ▶ Lift main boom further.
  - ▷ Main boom lifts off the ground.

When the auxiliary jib (36 t (79300 lb)) is attached and lifts off the ground:
- ▶ Stop main boom lift.

NOTICE
Incorrect limit stop setting for the pendant straps of the auxiliary jib!
Damage to auxiliary jib and pulleys on the main boom head when laying down.

- ▶ Ensure that the limit stop is set so that the pendant straps of the auxiliary jib fold upwards when laying down.

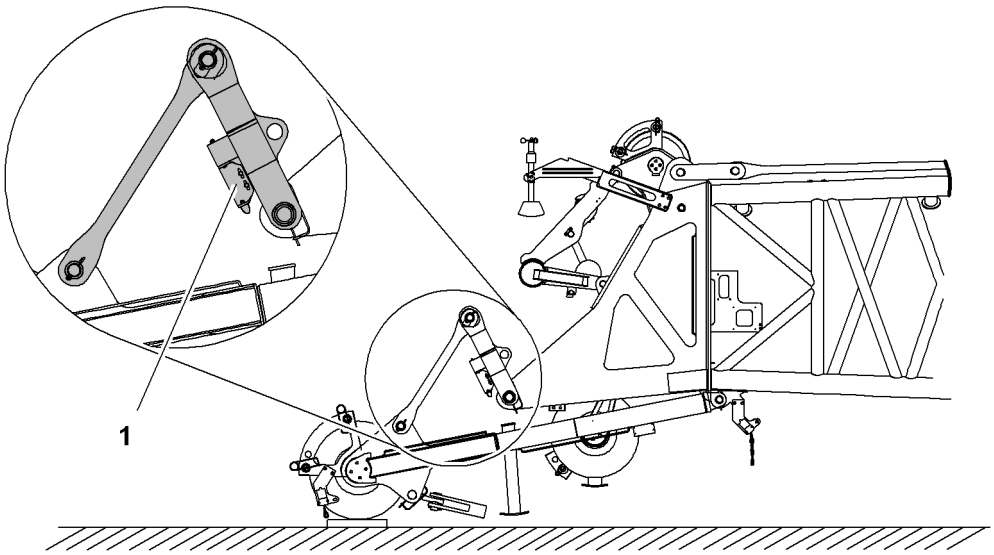

Fig. 3256: Checking the auxiliary jib limit stop

1 Limit stop

- ▶ Check the limit stop **1**, if necessary lay down the main boom and set the limit stop **1**.

LWN/LR.x/V03.01//Auslieferung/2015-06-03/en

copyright by
LIEBHERR

When the limit stop **1** is set correctly:

▶ Lift main boom further.
  ▷ Main boom erects itself:

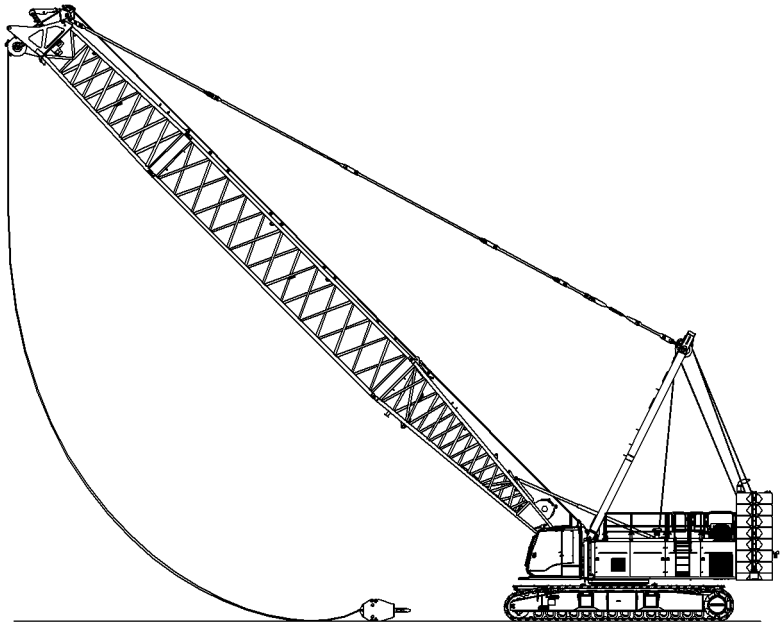

Fig. 3257: Main boom erects itself (illustration of principle)

As soon as there is a load chart for the geometry of the machine:
▷ Deactivate the function *Load moment limiter assembly*.
▷ The LED in the button *Load moment limiter assembly/self-lock* goes out.
▷ Load moment limiter is active.
▷ Load moment limiter lamps light up according to the current status of the Load Moment Limiter system.

NOTICE
Incorrect erection procedure is followed!
Damage to the equipment.

▶ Do not drag the hook or the pulley block along the ground.

▶ Do not allow any slacking of the rope.

▶ Unwind the rope of winch1/winch2 when necessary.
  ▷ The hook/pulley block remains on the ground.

When the maximum permitted lifting capacity is at least equal to the weight of the hook and/or pulley block:

▶ Raise the hook/pulley block.

▶ Erect the main boom until it is in the desired position.
  ▷ Main boom is erected:

LWN/LR.x/V03.01//Auslieferung/2015-06-03/en

copyright by
LIEBHERR

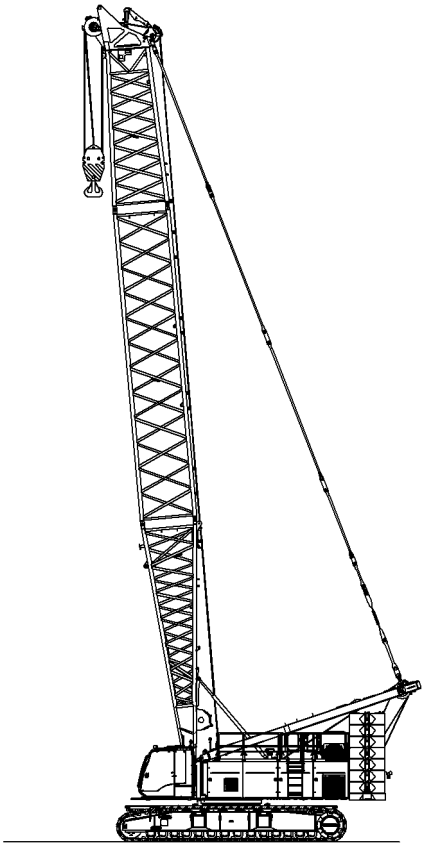

Fig. 3258: Erected main boom (illustration of principle)

7.7.2 Switching off assembly mode functions

Ensure that the following conditions are fulfilled:
- ❑ The machine is fully assembled and erected.
- ❑ All limit switches are fitted and operational.

▶ Press the *Assembly functions* switch on control panel *X12*.
- ▷ Assembly mode functions are switched off.
- ▷ The symbol *Assembly functions* disappears on screen.

LWN/LR.x/V03.01//Auslieferung/2015-06-03/en

7.7.3 Checking the main boom limit switch plate for proper adjustment

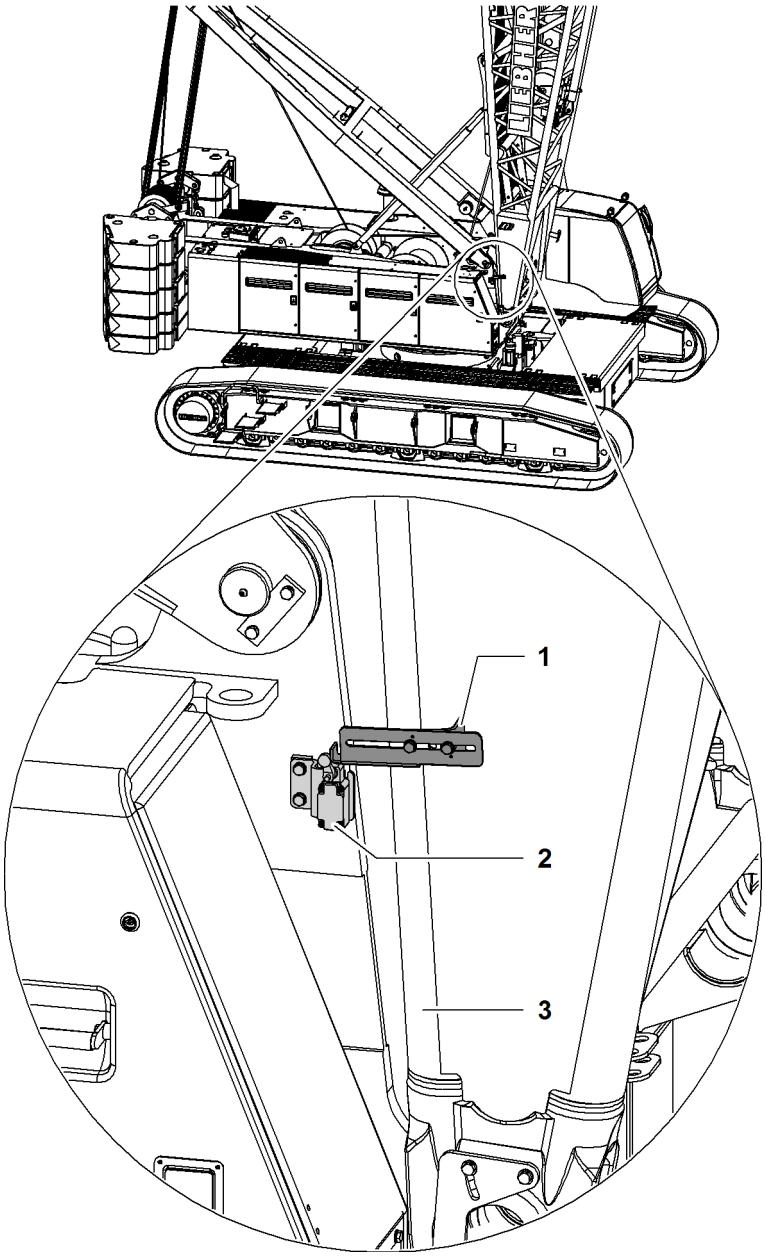

Fig. 3260: Checking the main boom limit switch plate for proper adjustment (illustration of principle)

1 Limit switch plate
2 Limit switch
3 Main boom base section

LWN/LR.x/V03.01//Auslieferung/2015-06-03/en

copyright by LIEBHERR

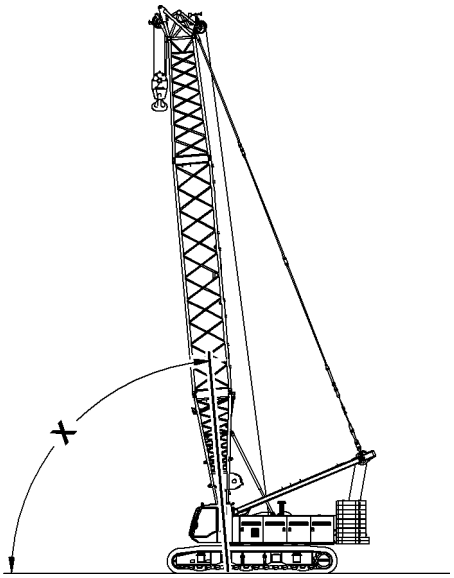

Fig. 3261: Top main boom angle (illustration of principle)

Boom configuration	Angle **X**
Main boom	86°
Main boom + derrick	
Main boom + reducing adapter	
Main boom + fixed jib	88°
Main boom + fixed jib + derrick	
Main boom + luffing jib	
Main boom + luffing jib + derrick	
Main boom + luffing jib + midfall	

Tab. 474: Main boom limit switch plate

NOTICE
Incorrect calibration of the main boom limit switch plate!
Damage to machine.

▶ Make sure that the main boom limit switch plate is properly adjusted.

▶ Erect the main boom until the screen *Operation* shows the angle **X**.
  ▷ Limit switch triggers.
  ▷ Lift main boom is locked.

If the limit switch triggers too early or not at all:
▶ Switch off machine.

▶ Contact Liebherr service department.

LWN/LR.x/V03.01//Auslieferung/2015-06-03/en

7.8 Main boom 2821 + derrick boom 2220

System-relevant information for main boom 2821 + derrick boom 2220:
- Configuration of main boom in derrick mode
  - Rope guide installation position (type B)
  - Mid-point suspensions installation positions
- Lengths of mid-point suspensions
- Overview of main boom 2821 steel pendant straps + derrick boom 2220
- Overview of CF pendant straps of main boom 2821 + derrick boom 2220
- Reeving diagrams for one rope across main boom head 2821 (load position1)
- Reeving diagrams for two ropes across main boom head 2821 (load position1)
- Reeving diagrams for one rope across auxiliary jib (36 t (79300 lb)) on main boom head 2821 (load position1)
- Reeving diagrams for two ropes across auxiliary jib (36 t (79300 lb)) and main boom head 2821 (load position 1)
- Reeving diagrams jib luffing winch as auxiliary winch

7.8.1 Configuration of main boom in derrick mode

DANGER
Erected length of main boom excessive!
Structural breakdown.

▶ Check the main boom length in the load chart for validity.

Main boom length	Configuration of main boom (symbolic)
41 m 134 ft	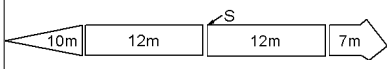
44 m 144 ft	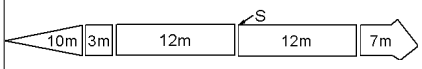
47 m 154 ft	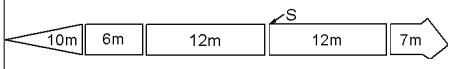
50 m 164 ft	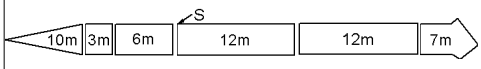
53 m 174 ft	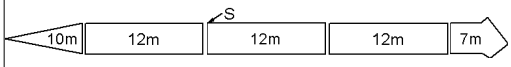
56 m 184 ft	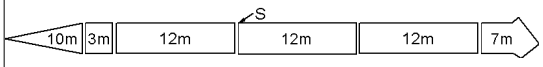
59 m 195 ft	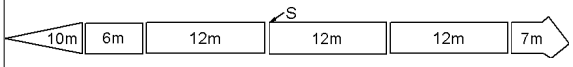
62 m 203 ft	
65 m 213 ft	
68 m 223 ft	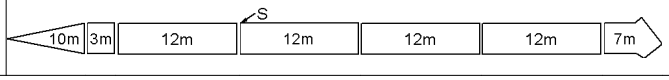

LWN/LR.x/V03.01//Auslieferung/2015-06-03/en

copyright by
LIEBHERR

Main boom length	Configuration of main boom (symbolic)
71 m 233 ft	10m, 6m, 12m, S, 12m, 12m, 12m, 7m
74 m 243 ft	10m, 3m, 6m, S, 12m, 12m, 12m, 12m, 7m
77 m 253 ft	10m, 12m, S, 12m, 12m, 12m, 12m, 7m
80 m 262 ft	10m, 3m, 12m, S, 12m, 12m, 12m, 12m, 7m
83 m 272 ft	10m, 6m, 12m, S, 12m, 12m, 12m, 12m, 7m
86 m 282 ft	10m, 3m, 6m, S, 12m, 12m, 12m, 12m, 12m, 7m
89 m 292 ft	10m, 12m, S, 12m, 12m, 12m, 12m, 12m, 7m
92 m 302 ft	10m, 3m, 12m, S, 12m, 12m, 12m, 12m, 12m, 7m
95 m 312 ft	10m, 6m, 12m, S, 12m, 12m, 12m, X1, 12m, 12m, 7m
98 m 322 ft	10m, 3m, 6m, S, 12m, 12m, 12m, 12m, X1, 12m, 12m, 7m
101 m 332 ft	10m, 12m, S, 12m, 12m, 12m, 12m, X1, 12m, 12m, 7m
104 m 342 ft	10m, 3m, 12m, S, 12m, 12m, 12m, X1, 12m, 12m, 12m, 7m
107 m 351 ft	10m, 6m, 12m, S, 12m, 12m, 12m, X1, 12m, 12m, 12m, 7m
110 m 361 ft	10m, 3m, 6m, S, 12m, 12m, 12m, 12m, X1, 12m, 12m, 12m, 7m
113 m 371 ft	10m, 12m, S, 12m, 12m, 12m, 12m, X1, 12m, 12m, 12m, 7m
116 m 381 ft	10m, 3m, 12m, S, 12m, 12m, 12m, 12m, X1, 12m, 12m, 12m, 7m
119 m 390 ft	10m, 6m, 12m, S, 12m, 12m, 12m, 12m, X1, 12m, 12m, 12m, 7m

Tab. 475: Configuration of main boom 2821 in derrick mode

S - Rope guide installation position (type B)

X1 - Assembly position of mid-point suspension 1

LWN/LR.x/V03.01//Auslieferung/2015-06-03/en

copyright by
LIEBHERR

7.8.2 Lengths of mid-point suspensions

Main boom length	Stay rope 1 (X1)
	Rope length
95 m 311‘ 8“ ft-in	7.2 m 23‘ 7“ ft-in = 2.1 m (6‘ 11“ ft-in) + 2.1 m (6‘ 11“ ft-in) + 3.0 m (9‘ 10“ ft-in)
98 m 321‘ 6“ ft-in	6.9 m 22‘ 8“ ft-in = 1.6 m (5‘ 3“ ft-in) + 1.6 m (5‘ 3“ ft-in) + 1.6 m (5‘ 3“ ft-in) + 2.1 m (6‘ 11“ ft-in)
101 m 331‘ 4“ ft-in	6.7 m 22‘ ft-in = 1.6 m (5‘ 3“ ft-in) + 2.1 m (6‘ 11“ ft-in) + 3.0 m (9‘ 10“ ft-in)
104 m 341‘ 2“ ft-in	9.2 m 30‘ 2“ ft-in = 1.6 m (5‘ 3“ ft-in) + 1.6 m (5‘ 3“ ft-in) + 3.0 m (9‘ 10“ ft-in) + 3.0 m (9‘ 10“ ft-in)
107 m 351‘ 1“ ft-in	8.9 m 29‘ 2“ ft-in = 1.6 m (5‘ 3“ ft-in) + 2.1 m (6‘ 11“ ft-in) + 2.6 m (8‘ 6“ ft-in) + 2.6 m (8‘ 6“ ft-in)
110 m 360‘ 11“ ft-in	8.8 m 28‘ 10“ ft-in = 1.6 m (5‘ 3“ ft-in) + 2.1 m (6‘ 11“ ft-in) + 2.1 m (6‘ 11“ ft-in) + 3.0 m (9‘ 10“ ft-in)
113 m 370‘ 9“ ft-in	8.6 m 28‘ 3“ ft-in = 2.6 m (8‘ 6“ ft-in) + 3.0 m (9‘ 10“ ft-in) + 3.0 m (9‘ 10“ ft-in)
116 m 380‘ 7“ ft-in	8.4 m 27‘ 7“ ft-in = 1.6 m (5‘ 3“ ft-in) + 2.1 m (6‘ 11“ ft-in) + 2.1 m (6‘ 11“ ft-in) + 2.6 m (8‘ 6“ ft-in)
119 m 390‘ 5“ ft-in	7.9 m 25‘ 11“ ft-in = 1.6 m (5‘ 3“ ft-in) + 1.6 m (5‘ 3“ ft-in) + 2.1 m (6‘ 11“ ft-in) + 2.6 m (8‘ 6“ ft-in)

Tab. 476: Lengths of mid-point suspensions - main boom 2821 + derrick boom 2220

LWN/LR.x/V03.01//Auslieferung/2015-06-03/en

copyright by
LIEBHERR

7.8.3 Overview of main boom 2821 steel pendant straps + derrick boom 2220

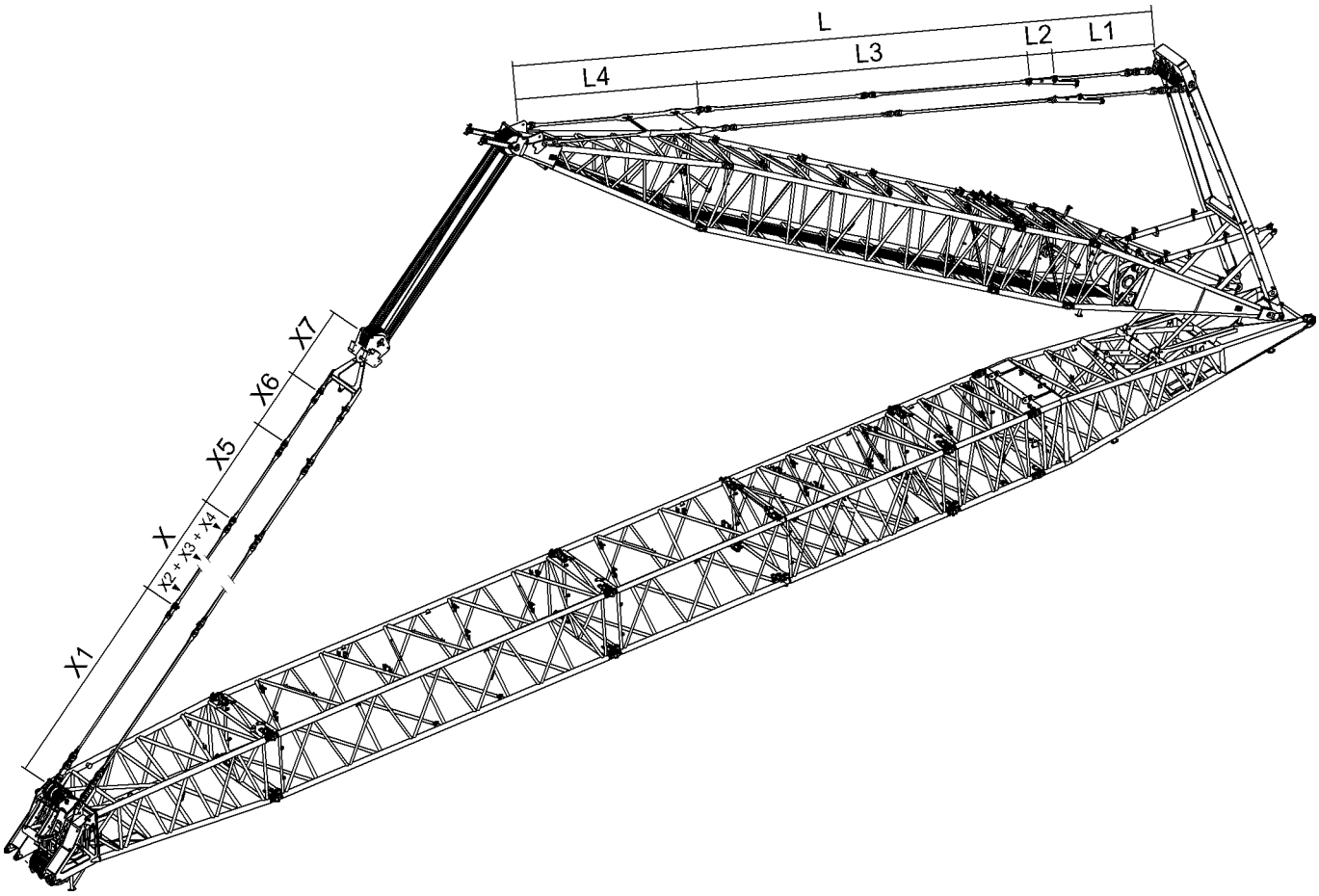

Fig. 3474: Overview of main boom 2821 steel pendant straps + derrick boom 2220

A-frame1 to 2220 derrick boom head pendant straps

Name			Value
L	**Derrick boom pendant straps** consisting of:		
	L1	**A-frame1 equalizer** (For more information see: A-frame1 equalizer, page 75)	3730 mm 12‘ 3“ ft-in
	L2	**Adapter connecting link** (For more information see: Adapter connecting link, page 388)	913 mm 3‘ ft-in
	L3	**Derrick boom pendant strap 12 m (40 ft)** (For more information see: Derrick boom pendant strap 12 m (40 ft), page 389)	12000 mm 39‘ 4“ ft-in
	L4	**Derrick boom pendant strap (crossbar)** (For more information see: Derrick boom pendant strap (crossbar), page 390)	6500 mm 21‘ 4“ ft-in

Tab. 477: A-frame1 pendant straps to derrick boom head 2220

LWN/LR.x/V03.01//Auslieferung/2015-06-03/en

2821 main boom head to 2220 derrick boom head pendant straps

Name			Value
X1	**Main boom pendant strap on main boom head 2821** (For more information see: Connecting links with tension load cell, page 197) + (For more information see: Main boom pendant strap on main boom head 2821.24, page 195)		6300 mm 20‘ 8“ ft-in
X	**Main boom pendant straps** consisting of:		Total **X2** + Total **X3** + Total **X4**
	X2	**Main boom pendant straps 3 m (10 ft)** (For more information see: Main boom pendant strap 3 m (10 ft), page 190)	
	X3	**Main boom pendant straps 6 m (20 ft)** (For more information see: Main boom pendant strap 6 m (20 ft), page 192)	
	X4	**Main boom pendant straps 12 m (40 ft)** (For more information see: Main boom pendant strap 12 m (40 ft), page 194)	
X5	**Equalizer of main boom base section 2821** (For more information see: Equalizer of main boom base section 2821.30, page 189)		2670 mm 8‘ 9“ ft-in
X6	**Main boom pendant strap** (For more information see: Pendant strap with connecting link, page 197)		1855 mm 6‘ 1“ ft-in
X7	**Derrick rope rigging with crossbar** (For more information see: Derrick rope rigging with crossbar, page 387)		2145 mm 7‘ ft-in

Tab. 478: Main boom head pendant straps 2821 for derrick boom head 2220

Composition of the pendant straps between 2821 main boom head and 2220 derrick boom head:

Main boom length	X1	Required pendant strap length X X = X2 + X3 + X4			X5	X6	X7
		X2	X3	X4			
41 m 134‘ 6“ ft-in	6300 mm 20‘ 8“ ft-in	-	-	-	2670 mm 8‘ 9“ ft-in	1855 mm 6‘ 1“ ft-in	2145 mm 7‘ ft-in
44 m 144‘ 4“ ft-in	6300 mm 20‘ 8“ ft-in	-	-	1 x 3 m (10 ft)	2670 mm 8‘ 9“ ft-in	1855 mm 6‘ 1“ ft-in	2145 mm 7‘ ft-in
47 m 154‘ 2“ ft-in	6300 mm 20‘ 8“ ft-in	-	1 x 6 m (20 ft)	-	2670 mm 8‘ 9“ ft-in	1855 mm 6‘ 1“ ft-in	2145 mm 7‘ ft-in
50 m 164‘ ft-in	6300 mm 20‘ 8“ ft-in	-	1 x 6 m (20 ft)	1 x 3 m (10 ft)	2670 mm 8‘ 9“ ft-in	1855 mm 6‘ 1“ ft-in	2145 mm 7‘ ft-in

LWN/LR.x/V03.01//Auslieferung/2015-06-03/en

copyright by
LIEBHERR

Main boom 2821 + derrick boom 2220

Main boom length	X1	Required pendant strap length X X = X2 + X3 + X4			X5	X6	X7
		X2	X3	X4			
53 m 173‘ 11“ ft-in	6300 mm 20‘ 8“ ft-in	1 x 12 m (40 ft)	-	-	2670 mm 8‘ 9“ ft-in	1855 mm 6‘ 1“ ft-in	2145 mm 7‘ ft-in
56 m 183‘ 9“ ft-in	6300 mm 20‘ 8“ ft-in	1 x 12 m (40 ft)	-	1 x 3 m (10 ft)	2670 mm 8‘ 9“ ft-in	1855 mm 6‘ 1“ ft-in	2145 mm 7‘ ft-in
59 m 193‘ 7“ ft-in	6300 mm 20‘ 8“ ft-in	1 x 12 m (40 ft)	1 x 6 m (20 ft)	-	2670 mm 8‘ 9“ ft-in	1855 mm 6‘ 1“ ft-in	2145 mm 7‘ ft-in
62 m 203‘ 5“ ft-in	6300 mm 20‘ 8“ ft-in	1 x 12 m (40 ft)	1 x 6 m (20 ft)	1 x 3 m (10 ft)	2670 mm 8‘ 9“ ft-in	1855 mm 6‘ 1“ ft-in	2145 mm 7‘ ft-in
65 m 213‘ 3“ ft-in	6300 mm 20‘ 8“ ft-in	2 x 12 m (40 ft)	-	-	2670 mm 8‘ 9“ ft-in	1855 mm 6‘ 1“ ft-in	2145 mm 7‘ ft-in
68 m 223‘ 1“ ft-in	6300 mm 20‘ 8“ ft-in	2 x 12 m (40 ft)	-	1 x 3 m (10 ft)	2670 mm 8‘ 9“ ft-in	1855 mm 6‘ 1“ ft-in	2145 mm 7‘ ft-in
71 m 232‘ 11“ ft-in	6300 mm 20‘ 8“ ft-in	2 x 12 m (40 ft)	1 x 6 m (20 ft)	-	2670 mm 8‘ 9“ ft-in	1855 mm 6‘ 1“ ft-in	2145 mm 7‘ ft-in
74 m 242‘ 9“ ft-in	6300 mm 20‘ 8“ ft-in	2 x 12 m (40 ft)	1 x 6 m (20 ft)	1 x 3 m (10 ft)	2670 mm 8‘ 9“ ft-in	1855 mm 6‘ 1“ ft-in	2145 mm 7‘ ft-in
77 m 252‘ 7“ ft-in	6300 mm 20‘ 8“ ft-in	3 x 12 m (40 ft)	-	-	2670 mm 8‘ 9“ ft-in	1855 mm 6‘ 1“ ft-in	2145 mm 7‘ ft-in
80 m 262‘ 6“ ft-in	6300 mm 20‘ 8“ ft-in	3 x 12 m (40 ft)	-	1 x 3 m (10 ft)	2670 mm 8‘ 9“ ft-in	1855 mm 6‘ 1“ ft-in	2145 mm 7‘ ft-in
83 m 272‘ 4“ ft-in	6300 mm 20‘ 8“ ft-in	3 x 12 m (40 ft)	1 x 6 m (20 ft)	-	2670 mm 8‘ 9“ ft-in	1855 mm 6‘ 1“ ft-in	2145 mm 7‘ ft-in
86 m 282‘ 2“ ft-in	6300 mm 20‘ 8“ ft-in	3 x 12 m (40 ft)	1 x 6 m (20 ft)	1 x 3 m (10 ft)	2670 mm 8‘ 9“ ft-in	1855 mm 6‘ 1“ ft-in	2145 mm 7‘ ft-in
89 m 292‘ ft-in	6300 mm 20‘ 8“ ft-in	4 x 12 m (40 ft)	-	-	2670 mm 8‘ 9“ ft-in	1855 mm 6‘ 1“ ft-in	2145 mm 7‘ ft-in
92 m 301‘ 10“ ft-in	6300 mm 20‘ 8“ ft-in	4 x 12 m (40 ft)	-	1 x 3 m (10 ft)	2670 mm 8‘ 9“ ft-in	1855 mm 6‘ 1“ ft-in	2145 mm 7‘ ft-in
95 m 311‘ 8“ ft-in	6300 mm 20‘ 8“ ft-in	4 x 12 m (40 ft)	1 x 6 m (20 ft)	-	2670 mm 8‘ 9“ ft-in	1855 mm 6‘ 1“ ft-in	2145 mm 7‘ ft-in
98 m 321‘ 6“ ft-in	6300 mm 20‘ 8“ ft-in	4 x 12 m (40 ft)	1 x 6 m (20 ft)	1 x 3 m (10 ft)	2670 mm 8‘ 9“ ft-in	1855 mm 6‘ 1“ ft-in	2145 mm 7‘ ft-in
101 m 331‘ 4“ ft-in	6300 mm 20‘ 8“ ft-in	5 x 12 m (40 ft)	-	-	2670 mm 8‘ 9“ ft-in	1855 mm 6‘ 1“ ft-in	2145 mm 7‘ ft-in
104 m 341‘ 2“ ft-in	6300 mm 20‘ 8“ ft-in	5 x 12 m (40 ft)	-	1 x 3 m (10 ft)	2670 mm 8‘ 9“ ft-in	1855 mm 6‘ 1“ ft-in	2145 mm 7‘ ft-in
107 m 351‘ 1“ ft-in	6300 mm 20‘ 8“ ft-in	5 x 12 m (40 ft)	1 x 6 m (20 ft)	-	2670 mm 8‘ 9“ ft-in	1855 mm 6‘ 1“ ft-in	2145 mm 7‘ ft-in
110 m 360‘ 11“ ft-in	6300 mm 20‘ 8“ ft-in	5 x 12 m (40 ft)	1 x 6 m (20 ft)	1 x 3 m (10 ft)	2670 mm 8‘ 9“ ft-in	1855 mm 6‘ 1“ ft-in	2145 mm 7‘ ft-in
113 m 370‘ 9“ ft-in	6300 mm 20‘ 8“ ft-in	6 x 12 m (40 ft)	-	-	2670 mm 8‘ 9“ ft-in	1855 mm 6‘ 1“ ft-in	2145 mm 7‘ ft-in

LWN/LR.x/V03.01//Auslieferung/2015-06-03/en

copyright by
LIEBHERR

Main boom length	X1	Required pendant strap length X X = X2 + X3 + X4			X5	X6	X7
		X2	X3	X4			
116 m 380‘ 7“ ft-in	6300 mm 20‘ 8“ ft-in	6 x 12 m (40 ft)	-	1 x 3 m (10 ft)	2670 mm 8‘ 9“ ft-in	1855 mm 6‘ 1“ ft-in	2145 mm 7‘ ft-in
119 m 390‘ 5“ ft-in	6300 mm 20‘ 8“ ft-in	6 x 12 m (40 ft)	1 x 6 m (20 ft)	-	2670 mm 8‘ 9“ ft-in	1855 mm 6‘ 1“ ft-in	2145 mm 7‘ ft-in

Tab. 479: Configuration of main boom head 2821 pendant straps to derrick boom head 2220

7.8.4 Overview of CF pendant straps of main boom 2821 + derrick boom 2220

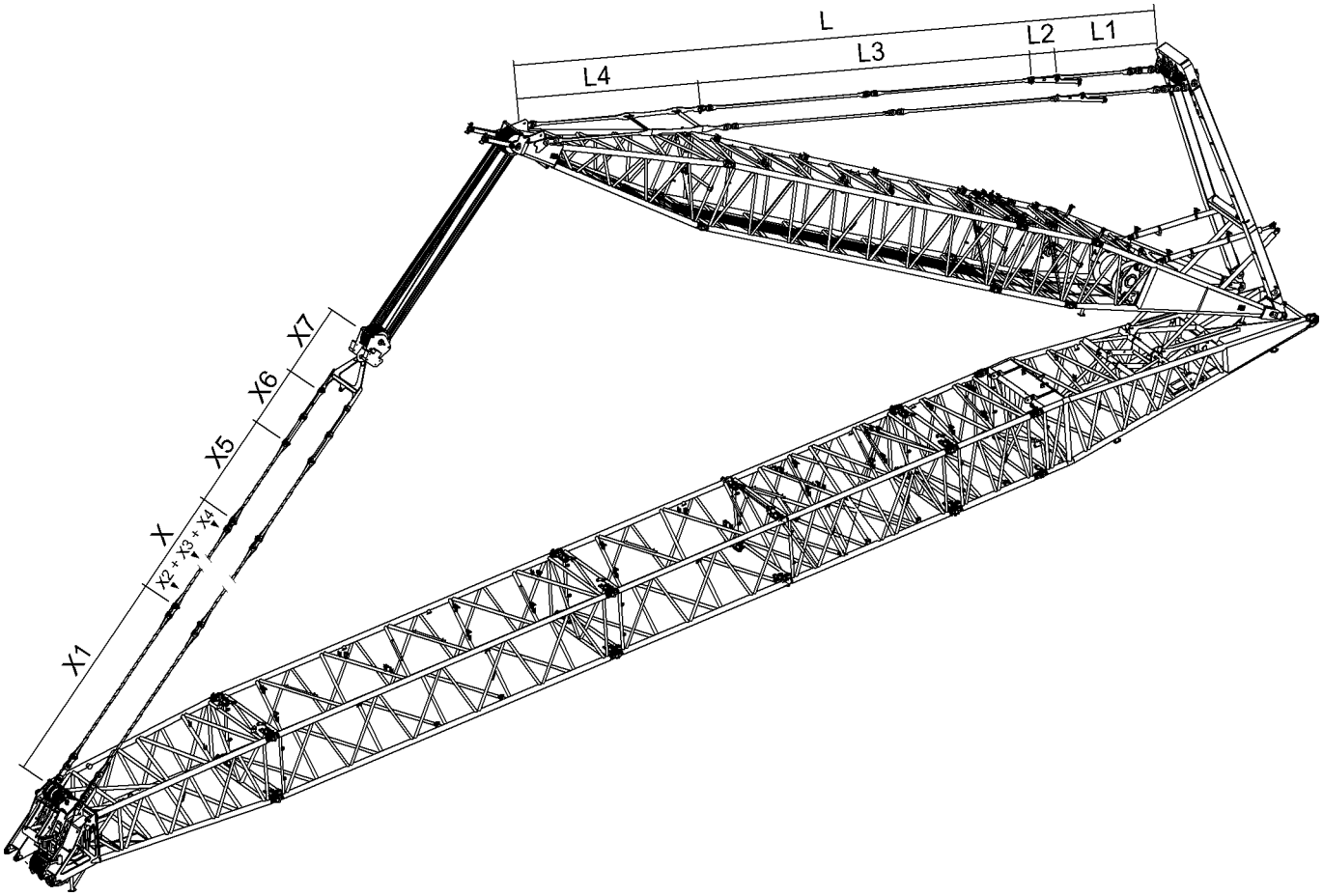

Fig. 3475: Overview of CF pendant straps of main boom 2821 + derrick boom 2220

LWN/LR.x/V03.01//Auslieferung/2015-06-03/en

copyright by
LIEBHERR

A-frame1 to 2220 derrick boom head pendant straps

Name			Value
L	**Derrick boom pendant straps** consisting of:		3700 mm 12‘ 2“ ft-in
	L1	**A-frame1 equalizer** (For more information see: A-frame1 equalizer, page 76)	
	L2	**Adapter connecting link** (For more information see: Adapter connecting link, page 388)	913 mm 3‘ ft-in
	L3	**Derrick boom pendant strap 12 m (40 ft)** (For more information see: Derrick boom pendant strap 12 m (40 ft), page 389)	12000 mm 39‘ 4“ ft-in
	L4	**Derrick boom pendant strap (crossbar)** (For more information see: Derrick boom pendant strap (crossbar), page 390)	6500 mm 21‘ 4“ ft-in

Tab. 480: A-frame1 pendant straps to derrick boom head 2220

2821 main boom head to 2220 derrick boom head pendant straps

Name			Value
X1	**Main boom pendant strap on main boom head 2821** (For more information see: Connecting links with tension load cell, page 214) + (For more information see: Main boom pendant strap on main boom head 2821.24, page 212)		6300 mm 20‘ 8“ ft-in
X	**Main boom pendant straps** consisting of:		Total **X2** + Total **X3** + Total **X4**
	X2	**Main boom pendant strap 3 m (10 ft)** (For more information see: Main boom pendant strap 3 m (10 ft), page 201)	
	X3	**Main boom pendant strap 6 m (20 ft)** (For more information see: Main boom pendant strap 6 m (20 ft), page 204)	
	X4	**Main boom pendant strap 12 m (40 ft)** (For more information see: Main boom pendant strap 12 m (40 ft), page 208)	
X5	**Equalizer of main boom base section 2821** (For more information see: Equalizer of main boom base section 2821.30, page 198)		2700 mm 8‘ 10“ ft-in
X6	**Connecting links** (For more information see: Connecting links, page 215)		1825 mm 6‘ ft-in

LWN/LR.x/V03.01//Auslieferung/2015-06-03/en

copyright by LIEBHERR

Name		Value
X7	**Derrick rope rigging with crossbar** (For more information see: Derrick rope rigging with crossbar, page 387)	2145 mm 7‘ ft-in

Tab. 481: Main boom head pendant straps 2821 for derrick boom head 2220

Composition of the pendant straps between 2821 main boom head and 2220 derrick boom head:

Main boom length	X1	Required pendant strap length X X = X2 + X3 + X4			X5	X6	X7
		X2	X3	X4			
41 m 134‘ 6“ ft-in	6300 mm 20‘ 8“ ft-in	-	-	-	2700 mm 8‘ 10“ ft-in	1825 mm 6‘ ft-in	2145 mm 7‘ ft-in
44 m 144‘ 4“ ft-in	6300 mm 20‘ 8“ ft-in	-	-	1 x 3 m (10 ft)	2700 mm 8‘ 10“ ft-in	1825 mm 6‘ ft-in	2145 mm 7‘ ft-in
47 m 154‘ 2“ ft-in	6300 mm 20‘ 8“ ft-in	-	1 x 6 m (20 ft)	-	2700 mm 8‘ 10“ ft-in	1825 mm 6‘ ft-in	2145 mm 7‘ ft-in
50 m 164‘ ft-in	6300 mm 20‘ 8“ ft-in	-	1 x 6 m (20 ft)	1 x 3 m (10 ft)	2700 mm 8‘ 10“ ft-in	1825 mm 6‘ ft-in	2145 mm 7‘ ft-in
53 m 173‘ 11“ ft-in	6300 mm 20‘ 8“ ft-in	1 x 12 m (40 ft)	-	-	2700 mm 8‘ 10“ ft-in	1825 mm 6‘ ft-in	2145 mm 7‘ ft-in
56 m 183‘ 9“ ft-in	6300 mm 20‘ 8“ ft-in	1 x 12 m (40 ft)	-	1 x 3 m (10 ft)	2700 mm 8‘ 10“ ft-in	1825 mm 6‘ ft-in	2145 mm 7‘ ft-in
59 m 193‘ 7“ ft-in	6300 mm 20‘ 8“ ft-in	1 x 12 m (40 ft)	1 x 6 m (20 ft)	-	2700 mm 8‘ 10“ ft-in	1825 mm 6‘ ft-in	2145 mm 7‘ ft-in
62 m 203‘ 5“ ft-in	6300 mm 20‘ 8“ ft-in	1 x 12 m (40 ft)	1 x 6 m (20 ft)	1 x 3 m (10 ft)	2700 mm 8‘ 10“ ft-in	1825 mm 6‘ ft-in	2145 mm 7‘ ft-in
65 m 213‘ 3“ ft-in	6300 mm 20‘ 8“ ft-in	2 x 12 m (40 ft)	-	-	2700 mm 8‘ 10“ ft-in	1825 mm 6‘ ft-in	2145 mm 7‘ ft-in
68 m 223‘ 1“ ft-in	6300 mm 20‘ 8“ ft-in	2 x 12 m (40 ft)	-	1 x 3 m (10 ft)	2700 mm 8‘ 10“ ft-in	1825 mm 6‘ ft-in	2145 mm 7‘ ft-in
71 m 232‘ 11“ ft-in	6300 mm 20‘ 8“ ft-in	2 x 12 m (40 ft)	1 x 6 m (20 ft)	-	2700 mm 8‘ 10“ ft-in	1825 mm 6‘ ft-in	2145 mm 7‘ ft-in
74 m 242‘ 9“ ft-in	6300 mm 20‘ 8“ ft-in	2 x 12 m (40 ft)	1 x 6 m (20 ft)	1 x 3 m (10 ft)	2700 mm 8‘ 10“ ft-in	1825 mm 6‘ ft-in	2145 mm 7‘ ft-in
77 m 252‘ 7“ ft-in	6300 mm 20‘ 8“ ft-in	3 x 12 m (40 ft)	-	-	2700 mm 8‘ 10“ ft-in	1825 mm 6‘ ft-in	2145 mm 7‘ ft-in
80 m 262‘ 6“ ft-in	6300 mm 20‘ 8“ ft-in	3 x 12 m (40 ft)	-	1 x 3 m (10 ft)	2700 mm 8‘ 10“ ft-in	1825 mm 6‘ ft-in	2145 mm 7‘ ft-in
83 m 272‘ 4“ ft-in	6300 mm 20‘ 8“ ft-in	3 x 12 m (40 ft)	1 x 6 m (20 ft)	-	2700 mm 8‘ 10“ ft-in	1825 mm 6‘ ft-in	2145 mm 7‘ ft-in
86 m 282‘ 2“ ft-in	6300 mm 20‘ 8“ ft-in	3 x 12 m (40 ft)	1 x 6 m (20 ft)	1 x 3 m (10 ft)	2700 mm 8‘ 10“ ft-in	1825 mm 6‘ ft-in	2145 mm 7‘ ft-in
89 m 292‘ ft-in	6300 mm 20‘ 8“ ft-in	4 x 12 m (40 ft)	-	-	2700 mm 8‘ 10“ ft-in	1825 mm 6‘ ft-in	2145 mm 7‘ ft-in

copyright by
LIEBHERR

Main boom length	X1	Required pendant strap length X X = X2 + X3 + X4			X5	X6	X7
		X2	X3	X4			
92 m 301‘ 10“ ft-in	6300 mm 20‘ 8“ ft-in	4 x 12 m (40 ft)	-	1 x 3 m (10 ft)	2700 mm 8‘ 10“ ft-in	1825 mm 6‘ ft-in	2145 mm 7‘ ft-in
95 m 311‘ 8“ ft-in	6300 mm 20‘ 8“ ft-in	4 x 12 m (40 ft)	1 x 6 m (20 ft)	-	2700 mm 8‘ 10“ ft-in	1825 mm 6‘ ft-in	2145 mm 7‘ ft-in
98 m 321‘ 6“ ft-in	6300 mm 20‘ 8“ ft-in	4 x 12 m (40 ft)	1 x 6 m (20 ft)	1 x 3 m (10 ft)	2700 mm 8‘ 10“ ft-in	1825 mm 6‘ ft-in	2145 mm 7‘ ft-in
101 m 331‘ 4“ ft-in	6300 mm 20‘ 8“ ft-in	5 x 12 m (40 ft)	-	-	2700 mm 8‘ 10“ ft-in	1825 mm 6‘ ft-in	2145 mm 7‘ ft-in
104 m 341‘ 2“ ft-in	6300 mm 20‘ 8“ ft-in	5 x 12 m (40 ft)	-	1 x 3 m (10 ft)	2700 mm 8‘ 10“ ft-in	1825 mm 6‘ ft-in	2145 mm 7‘ ft-in
107 m 351‘ 1“ ft-in	6300 mm 20‘ 8“ ft-in	5 x 12 m (40 ft)	1 x 6 m (20 ft)	-	2700 mm 8‘ 10“ ft-in	1825 mm 6‘ ft-in	2145 mm 7‘ ft-in
110 m 360‘ 11“ ft-in	6300 mm 20‘ 8“ ft-in	5 x 12 m (40 ft)	1 x 6 m (20 ft)	1 x 3 m (10 ft)	2700 mm 8‘ 10“ ft-in	1825 mm 6‘ ft-in	2145 mm 7‘ ft-in
113 m 370‘ 9“ ft-in	6300 mm 20‘ 8“ ft-in	6 x 12 m (40 ft)	-	-	2700 mm 8‘ 10“ ft-in	1825 mm 6‘ ft-in	2145 mm 7‘ ft-in
116 m 380‘ 7“ ft-in	6300 mm 20‘ 8“ ft-in	6 x 12 m (40 ft)	-	1 x 3 m (10 ft)	2700 mm 8‘ 10“ ft-in	1825 mm 6‘ ft-in	2145 mm 7‘ ft-in
119 m 390‘ 5“ ft-in	6300 mm 20‘ 8“ ft-in	6 x 12 m (40 ft)	1 x 6 m (20 ft)	-	2700 mm 8‘ 10“ ft-in	1825 mm 6‘ ft-in	2145 mm 7‘ ft-in

Tab. 482: Configuration of main boom head 2821 pendant straps for derrick boom head 2220

The main boom pendant straps **(X)** may consist of generation A and generation B main boom pendant straps (For more information see: 1.11.9 CF pendant straps on main boom 2821, page 198) . Mixing is only admissible if the number of generation B main boom pendant straps only differs by at most 1 in the left and the right strand of the pendant straps.

DANGER

Inadmissible mixing of generation A and generation B main boom pendant straps! Structural failure.

▶ Ensure that the number of generation B main boom pendant straps differs by at most 1 in the left and the right strand of the pendant straps.

LWN/LR.x/V03.01//Auslieferung/2015-06-03/en

copyright by LIEBHERR

7.8.5 Reeving diagrams for one rope across main boom head 2821 (load position1)

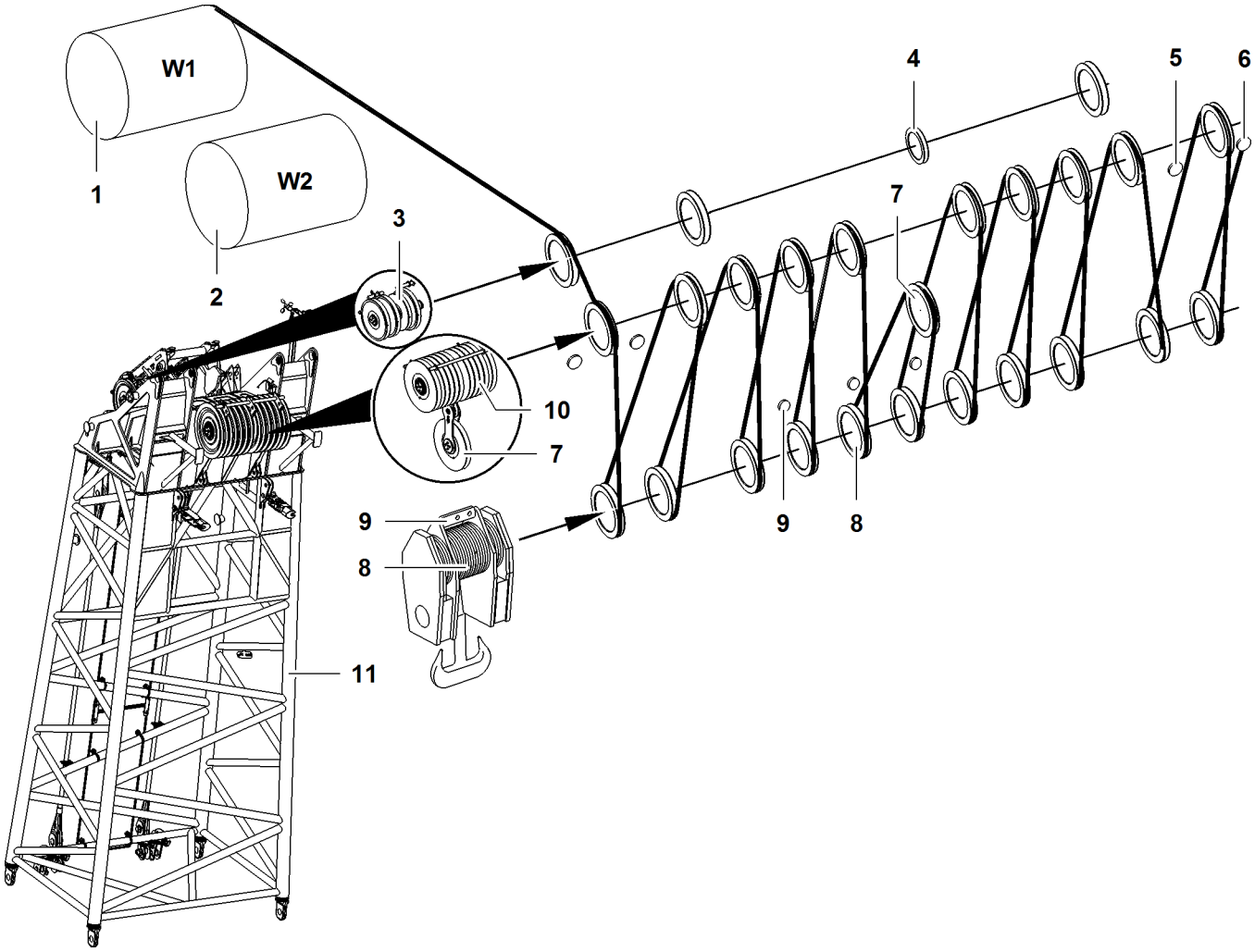

Fig. 3476: Reeving diagrams for one rope across main boom head 2821 (load position1)

1	Winch1	**5**	Inner rope fixing point (2x) of main boom head	**9**	Rope fixing points of pulley block
2	Winch2	**6**	Outer rope fixing point (2x) of main boom head	**10**	Pulley (10x) of main boom head
3	Gantry pulley (3x) of main boom head	**7**	11th pulley of main boom head	**11**	Main boom head
4	Pulley for rope of jib luffing winch	**8**	Pulley set of pulley block		

LWN/LR.x/V03.01//Auslieferung/2015-06-03/en

copyright by
LIEBHERR

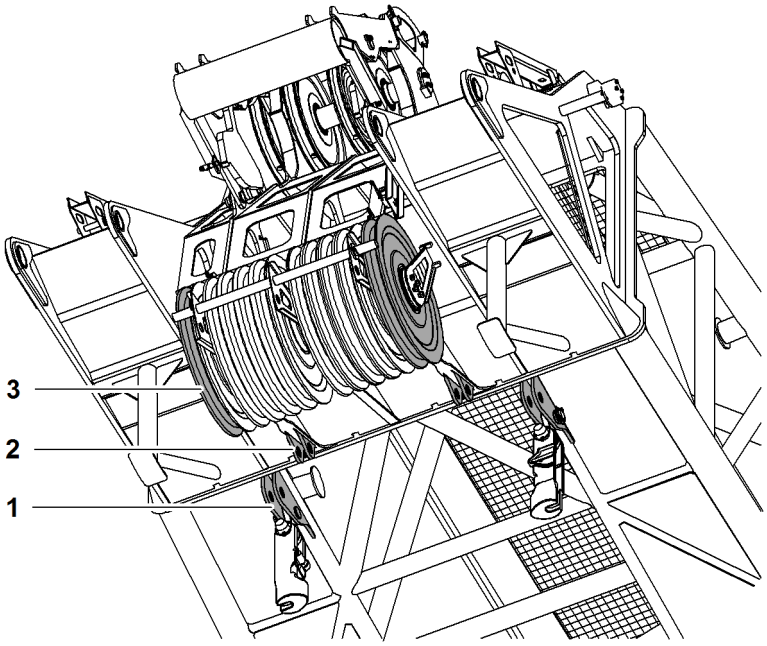

Fig. 3477: Rope fixing points main boom head 2821

1 Outer rope fixing point (2x)
2 Inner rope fixing point (2x)
3 Pulley (2x)

If the first or last pulley **3** on the pulley set of the main boom head is used (reeved), the outer rope fixing point **1** is to be used.

If the first or last pulley **3** on the pulley set of the main boom head is not used (not reeved), the inner rope fixing point **2** is to be used.

DANGER
Incorrect number of reevings!
Structural breakdown, toppling of machine.

▶ Choose the correct number of reevings as per the load chart.

Reeving diagrams for one rope across main boom head 2821 (load position1)	
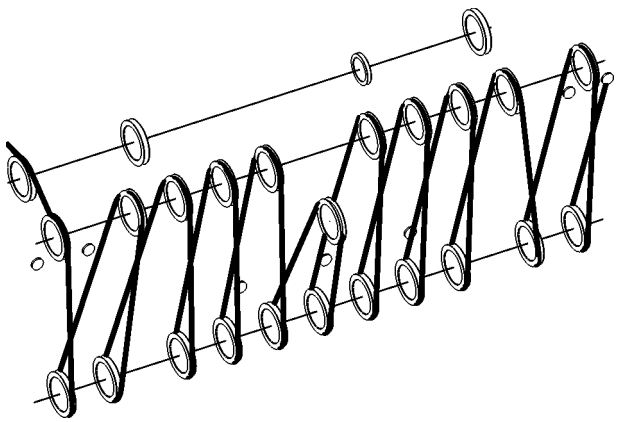 22x	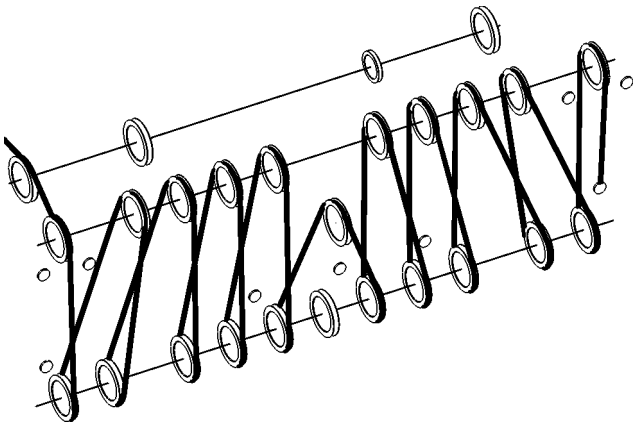 21x

LWN/LR.x/V03.01//Auslieferung/2015-06-03/en

copyright by LIEBHERR

Reeving diagrams for one rope across main boom head 2821 (load position1)	
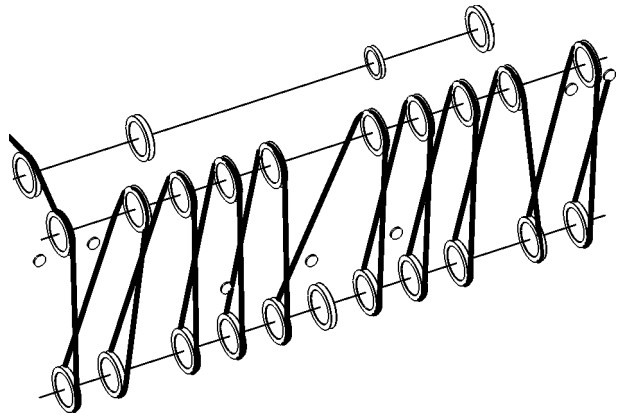 20x	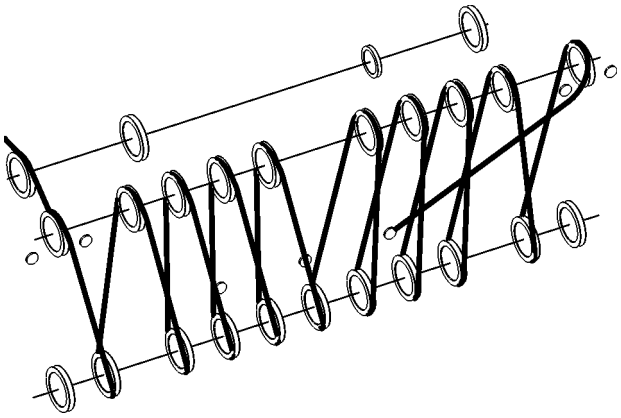 19x
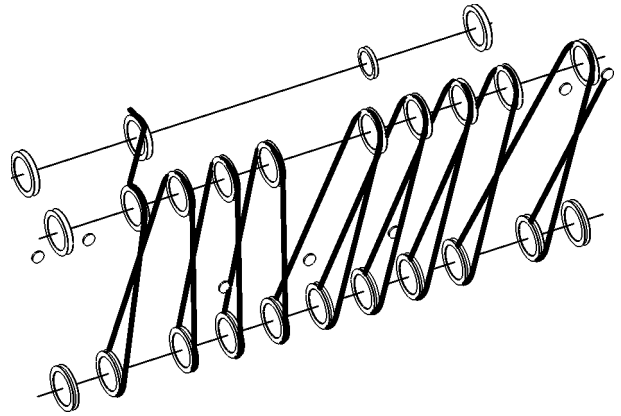 18x	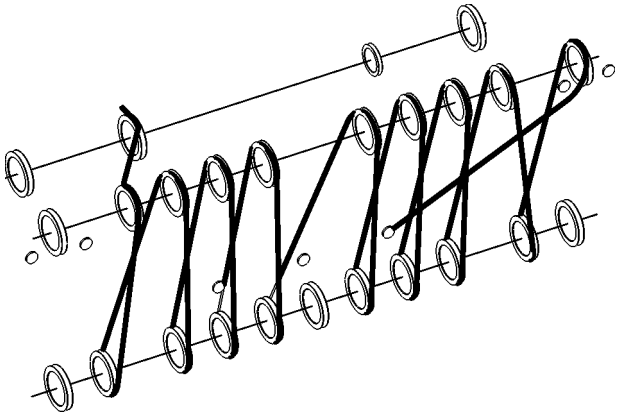 17x
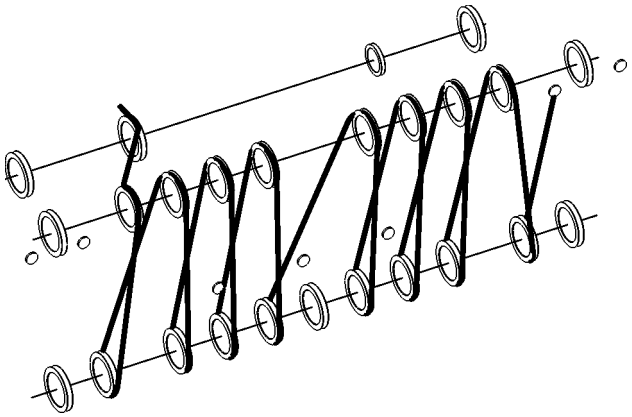 16x	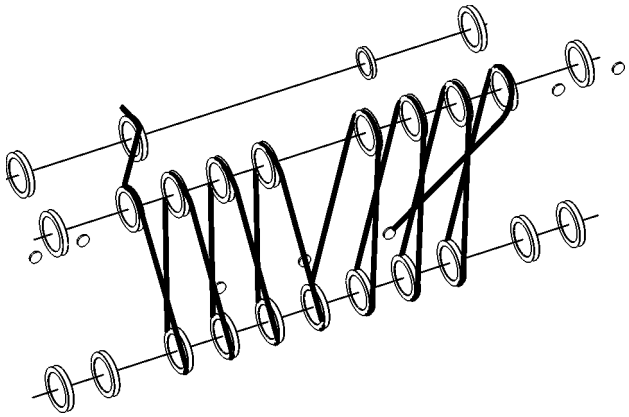 15x

LWN/LR.x/V03.01//Auslieferung/2015-06-03/en

copyright by
LIEBHERR

Reeving diagrams for one rope across main boom head 2821 (load position1)

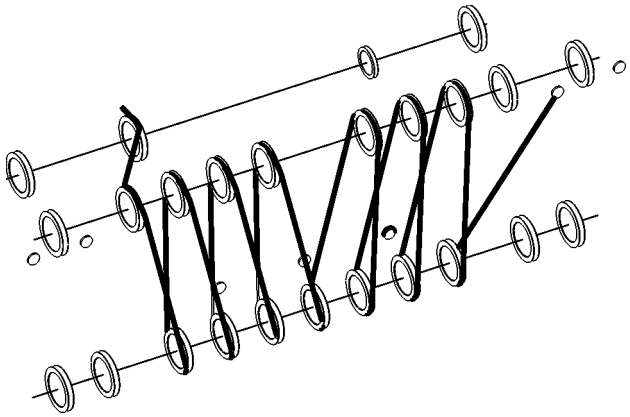

14x

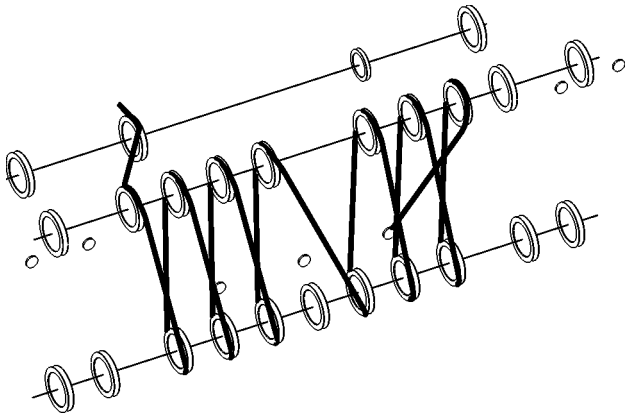

13x

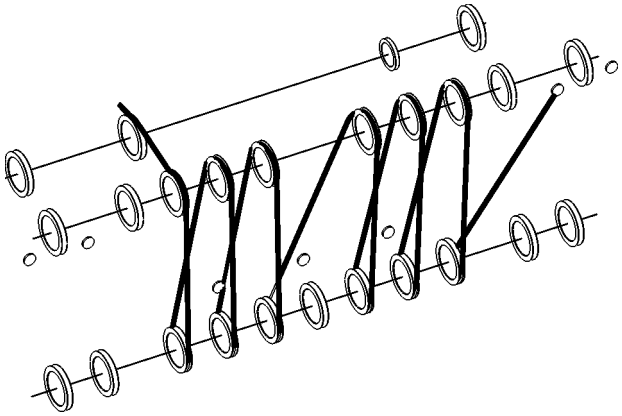

12x

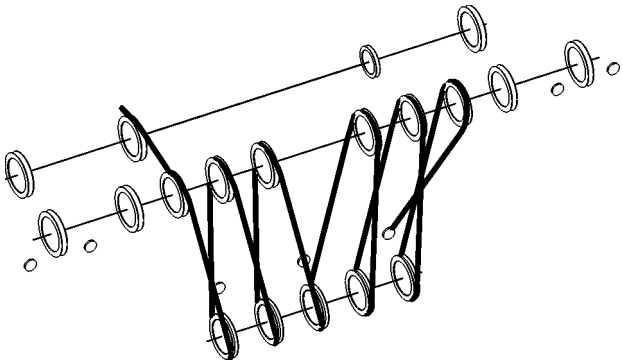

11x

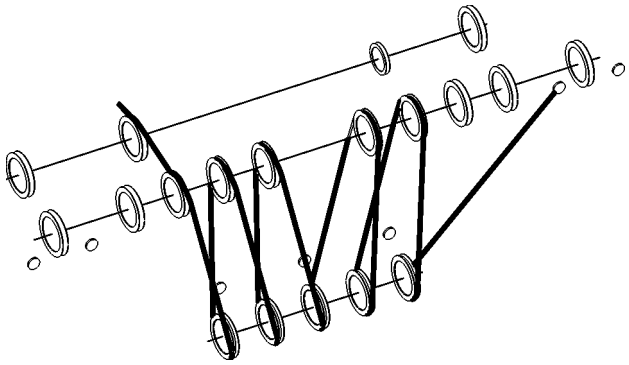

10x

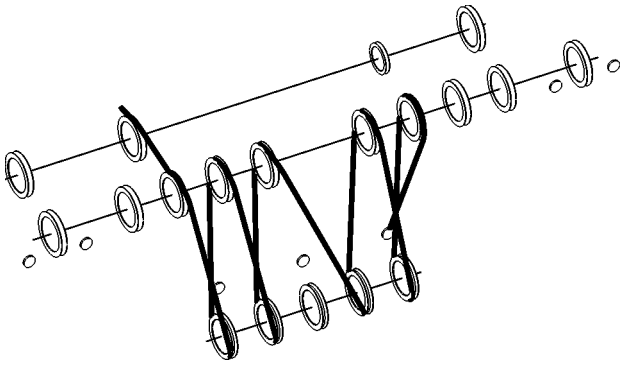

9x

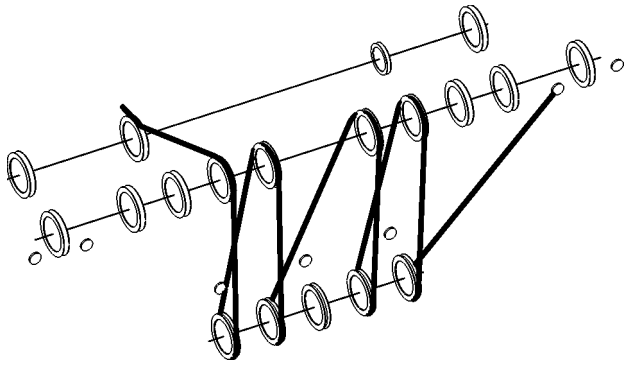

8x

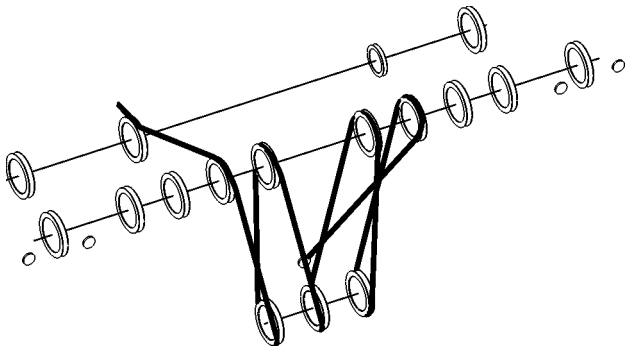

7x

LWN/LR.x/V03.01//Auslieferung/2015-06-03/en

copyright by LIEBHERR

Reeving diagrams for one rope across main boom head 2821 (load position1)	
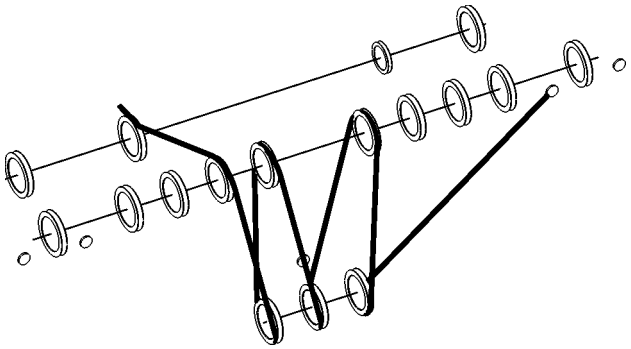 6x	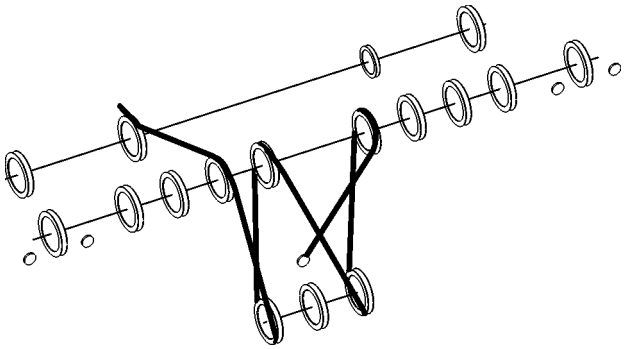 5x
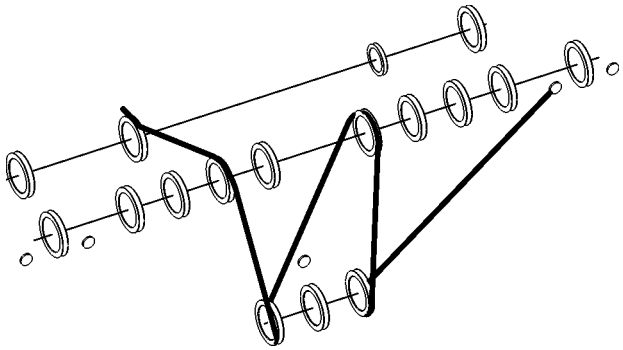 4x	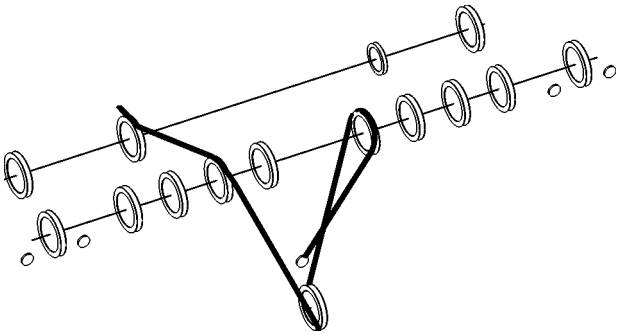 3x
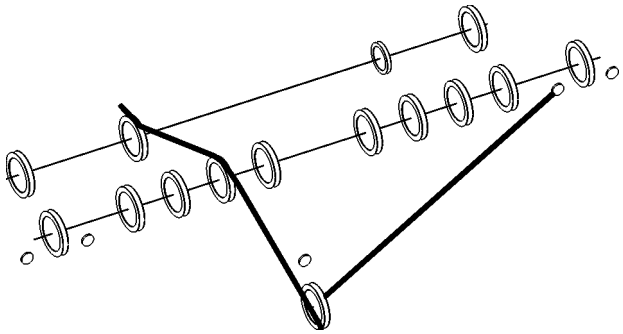 2x	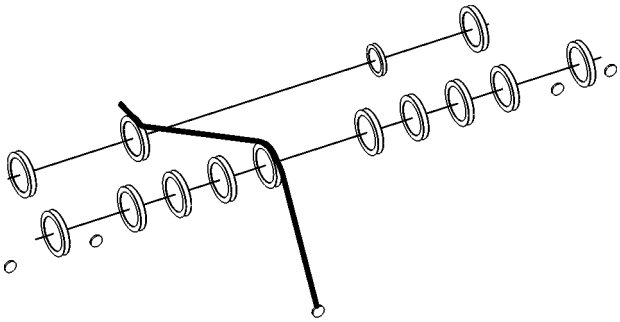 1x

Tab. 483: Reeving diagrams for one rope across main boom head 2821 (load position1)

LWN/LR.x/V03.01//Auslieferung/2015-06-03/en

copyright by LIEBHERR

7.8.6 Reeving diagrams for two ropes across main boom head 2821 (load position1)

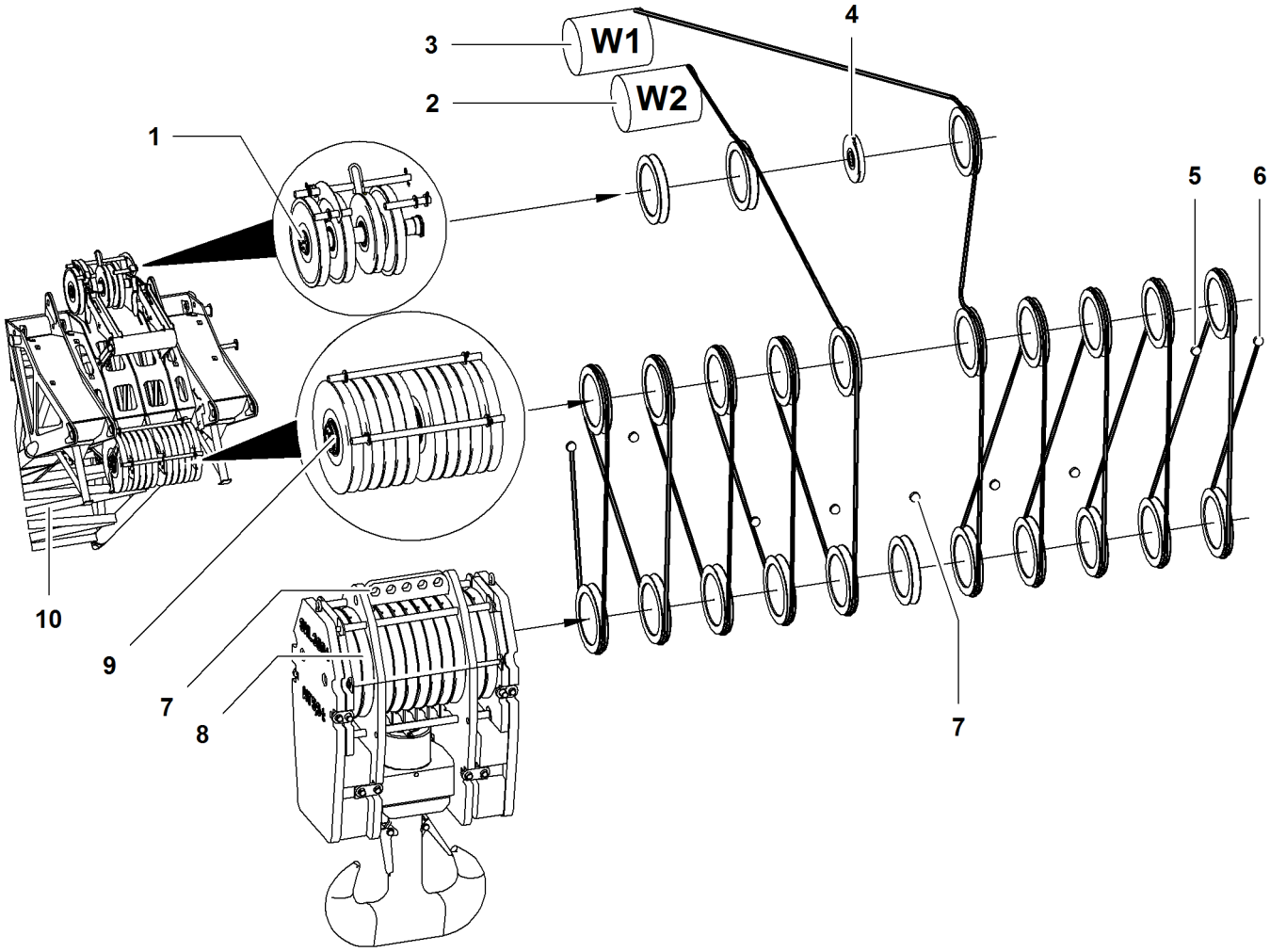

Fig. 3500: Reeving diagrams for two ropes across main boom head 2821 (load position1)

1	Gantry pulley (3x) of main boom head	**5**	Inner rope fixing point (2x) of main boom head	**9**	Pulley (10x) of main boom head
2	Winch2	**6**	Outer rope fixing point (2x) of main boom head	**10**	Main boom head
3	Winch1	**7**	Rope fixing points of pulley block		
4	Pulley for rope of jib luffing winch	**8**	Pulley set of pulley block		

LWN/LR.x/V03.01//Auslieferung/2015-06-03/en

copyright by
LIEBHERR

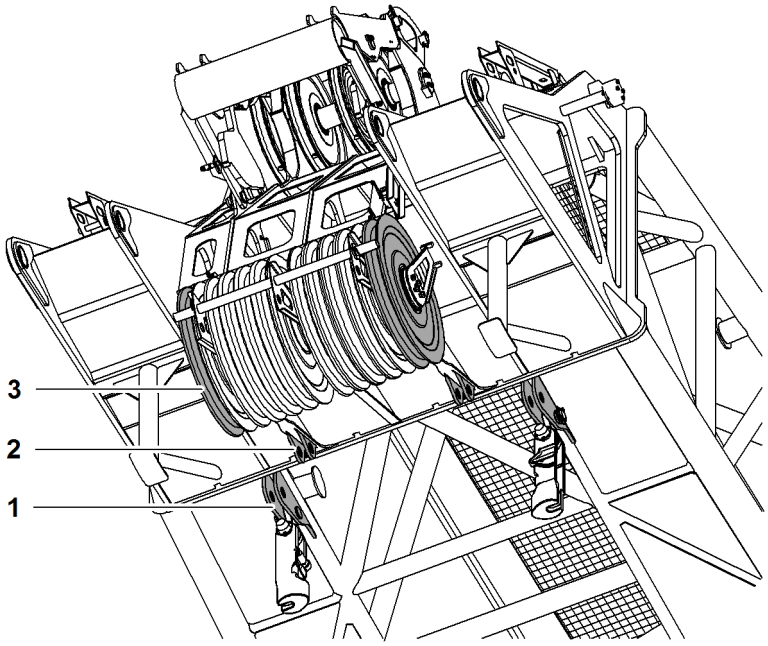

Fig. 3501: Rope fixing points main boom head 2821

1 Outer rope fixing point (2x)
2 Inner rope fixing point (2x)
3 Pulley (2x)

If the first or last pulley **3** on the pulley set of the main boom head is used (reeved), the outer rope fixing point **1** is to be used.

If the first or last pulley **3** on the pulley set of the main boom head is not used (not reeved), the inner rope fixing point **2** is to be used.

DANGER
Inadmissible number of reevings!
Structural breakdown, toppling of machine.

▶ Choose correct number of reevings as indicated in load chart.

Reeving diagrams for two ropes across main boom head 2821 (load position1)

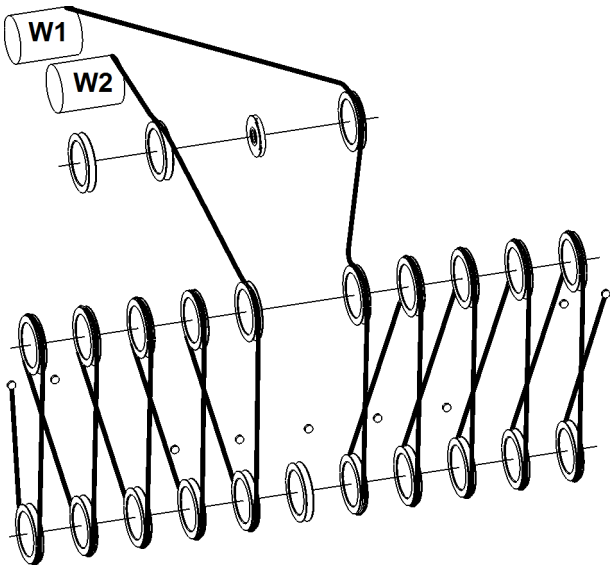

20x

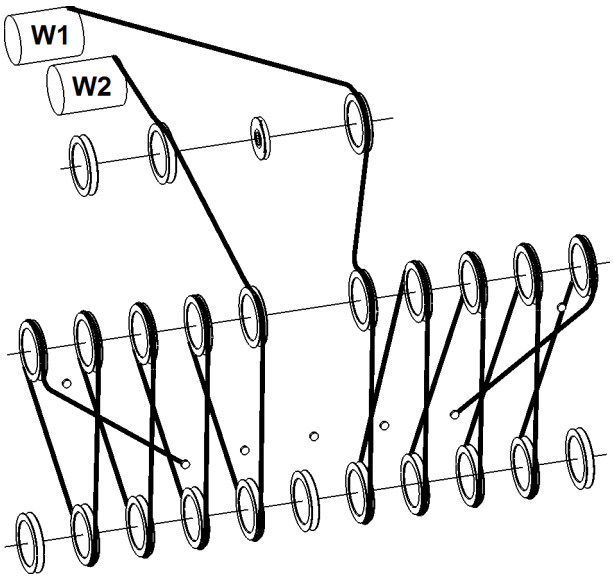

18x

LWN/LR.x/V03.01//Auslieferung/2015-06-03/en

copyright by
LIEBHERR

Reeving diagrams for two ropes across main boom head 2821 (load position1)

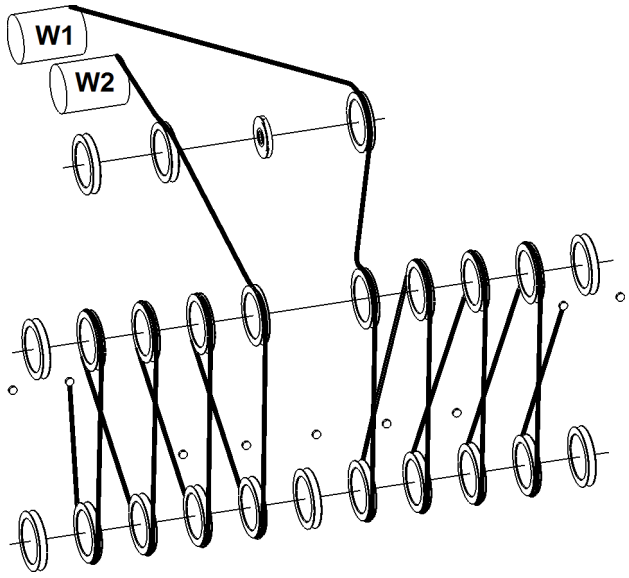

16x

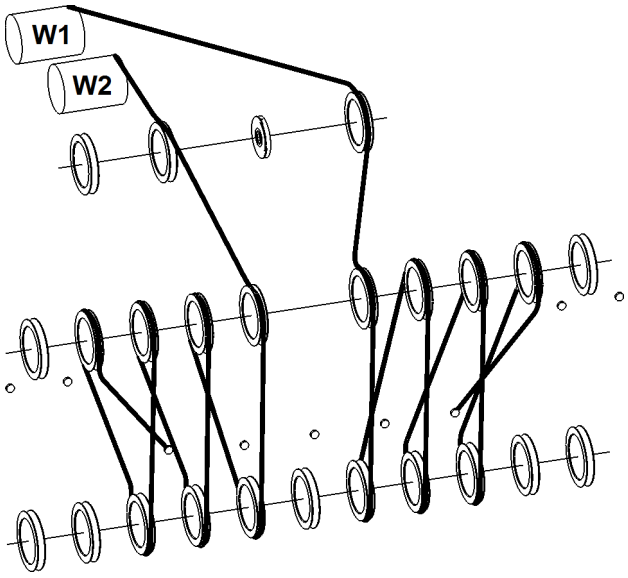

14x

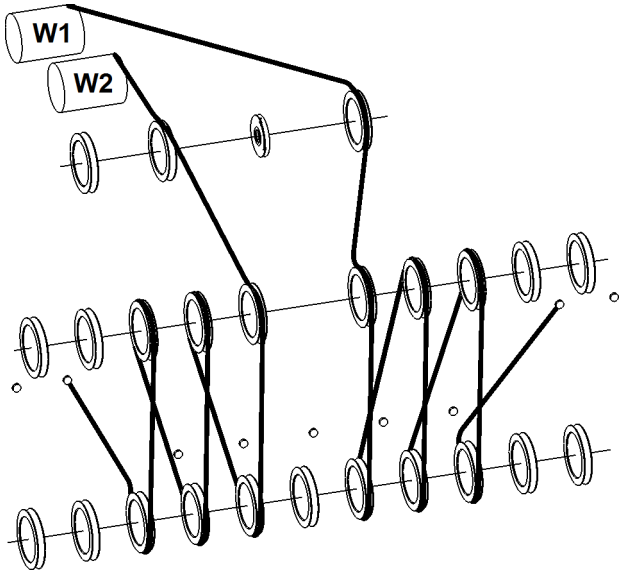

12x

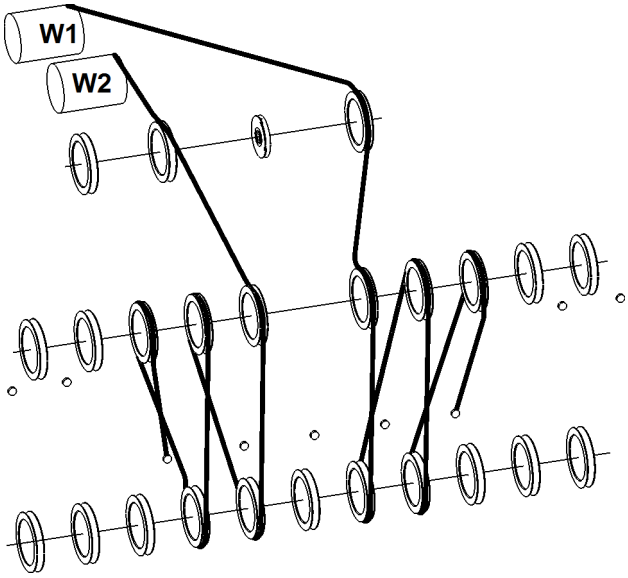

10x

LWN/LR.x/V03.01//Auslieferung/2015-06-03/en

copyright by
LIEBHERR

Reeving diagrams for two ropes across main boom head 2821 (load position1)	
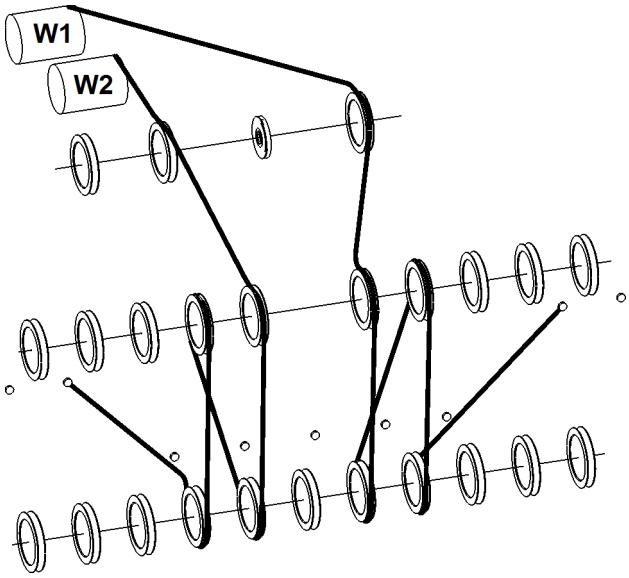 8x	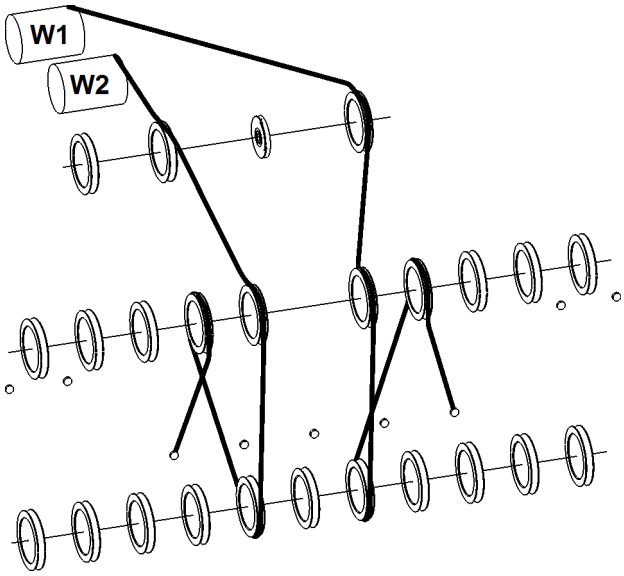 6x
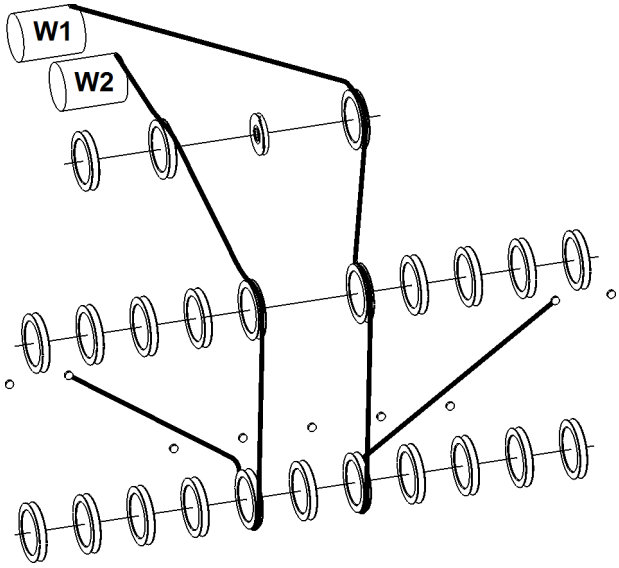 4x	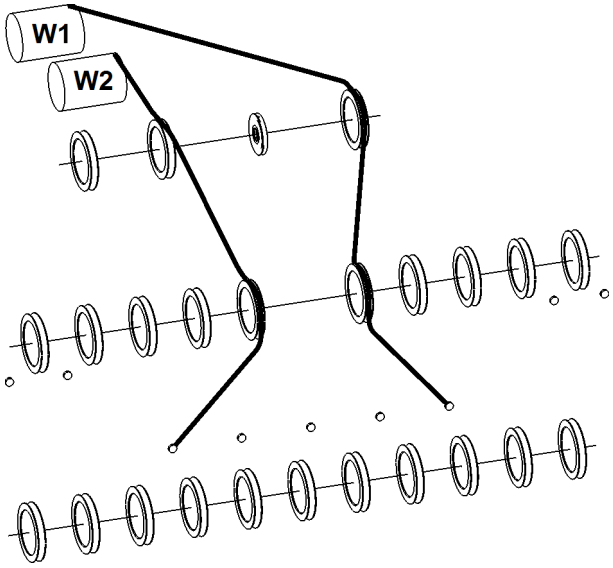 2x

Tab. 484: Reeving diagrams for two ropes across main boom head 2821 (load position1)

LWN/LR.x/V03.01//Auslieferung/2015-06-03/en

copyright by
LIEBHERR

7.8.7 Reeving diagrams for one rope across auxiliary jib (36 t (79300 lb)) on main boom head 2821 (load position1)

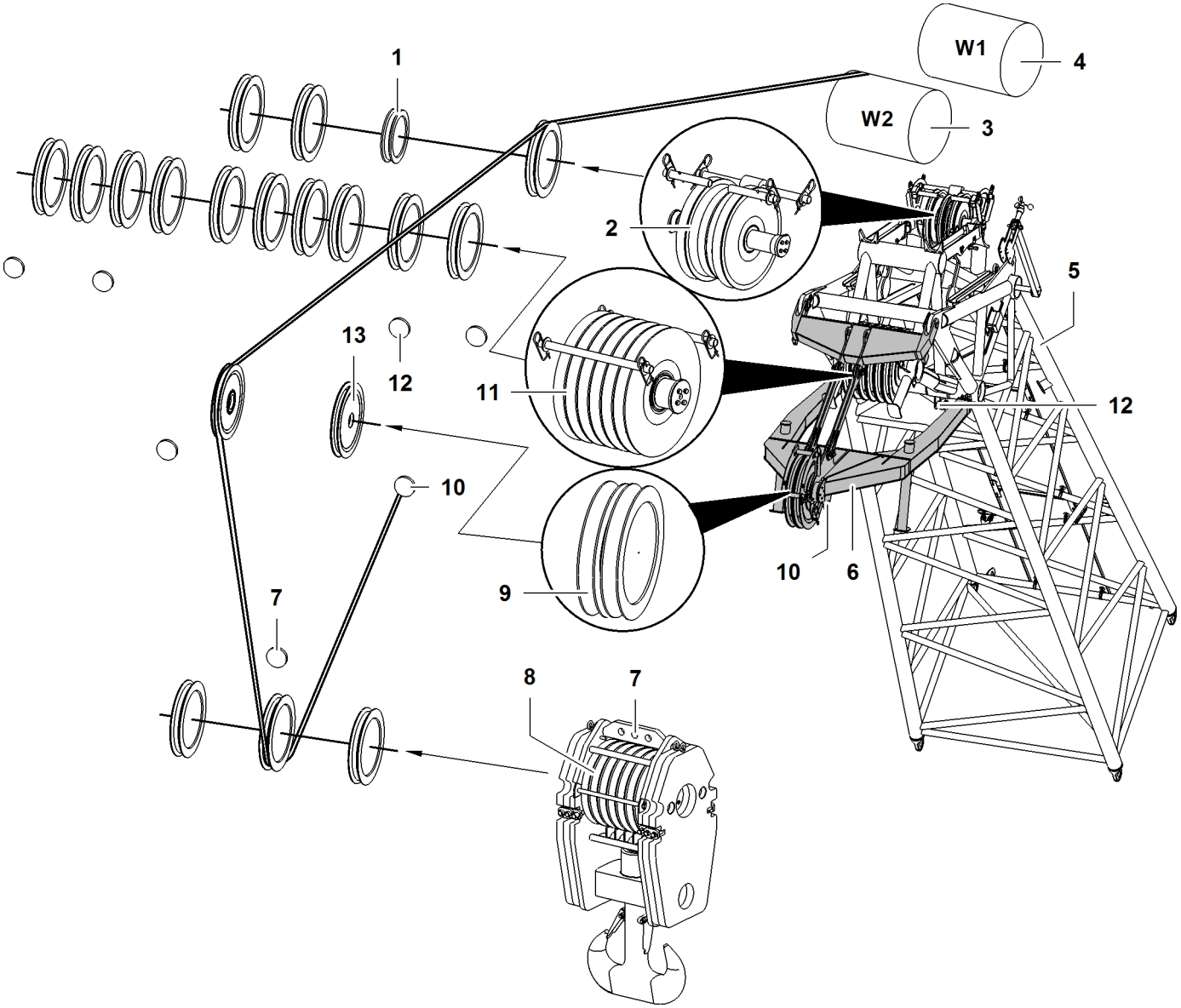

Fig. 3512: Reeving diagrams for one rope across auxiliary jib (36 t (79300 lb)) on main boom head 2821 (load position1)

1 Pulley for rope of jib luffing winch
2 Gantry pulley (3x) of main boom head
3 Winch2
4 Winch1
5 Main boom head
6 Auxiliary jib (36 t (79300 lb))
7 Rope fixing points of pulley block
8 Pulley set of pulley block
9 Pulley of auxiliary jib (36 t (79300 lb))
10 Rope fixing point of auxiliary jib (36 t (79300 lb))
11 Pulley (10x) of main boom head
12 Rope fixing point (4x) of main boom head
13 Second pulley* for triple reeving of auxiliary jib (36 t (79300 lb))

LWN/LR.x/V03.01/Auslieferung/2015-06-03/en

copyright by LIEBHERR

DANGER
Inadmissible number of reevings!
Structural breakdown, toppling of machine.

▶ Choose correct number of reevings as indicated in load chart.

Reeving diagrams for one rope across auxiliary jib (36 t (79300 lb)) on main boom head 2821 (load position1)	
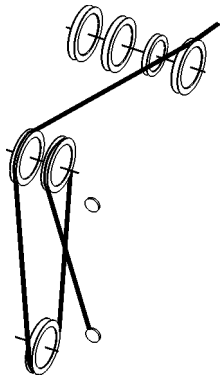 3x	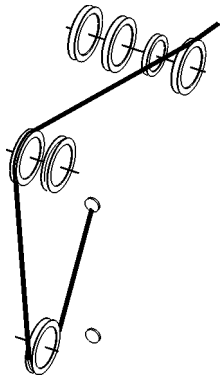 2x
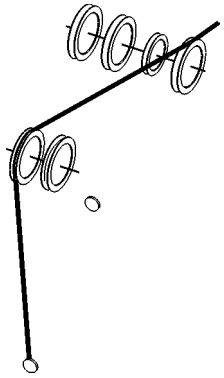 1x	

Tab. 485: Reeving diagrams for one rope across auxiliary jib (36 t (79300 lb)) on main boom head 2821 (load position1)

LWN/LR.x/V03.01//Auslieferung/2015-06-03/en

copyright by
LIEBHERR

7.8.8 Reeving diagrams for two ropes across auxiliary jib (36 t (79300 lb)) and main boom head 2821 (load position 1)

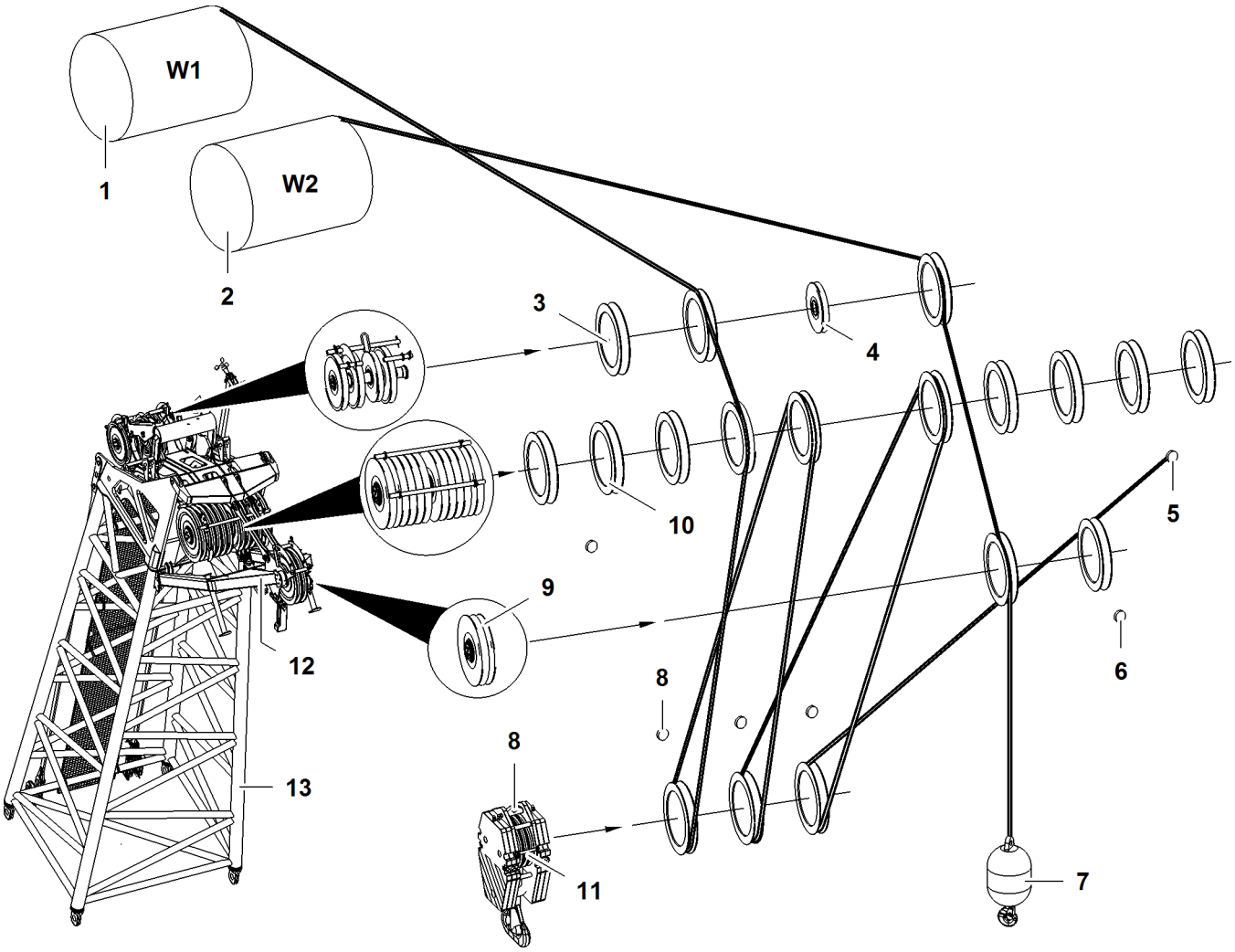

Fig. 3516: Reeving diagrams for two ropes across auxiliary jib (36 t (79300 lb)) and main boom head 2821 (load position 1)

1	Winch1	**6**	Rope fixing point of auxiliary jib (36 t (79300 lb))	**11**	Pulley set of pulley block
2	Winch2	**7**	Hook	**12**	Auxiliary jib (36 t (79300 lb))
3	Gantry pulley (3x) of main boom head	**8**	Rope fixing points of pulley block	**13**	Main boom head
4	Pulley for rope of jib luffing winch	**9**	Second pulley* for triple reeving of auxiliary jib (36 t (79300 lb))		
5	Rope fixing point (4x) of main boom head	**10**	Pulley (10x) of main boom head		

DANGER
Inadmissible number of reevings!
Structural breakdown, toppling of machine.

▶ Choose correct number of reevings as indicated in load chart.

LWN/LR.x/V03.01//Auslieferung/2015-06-03/en

copyright by
LIEBHERR

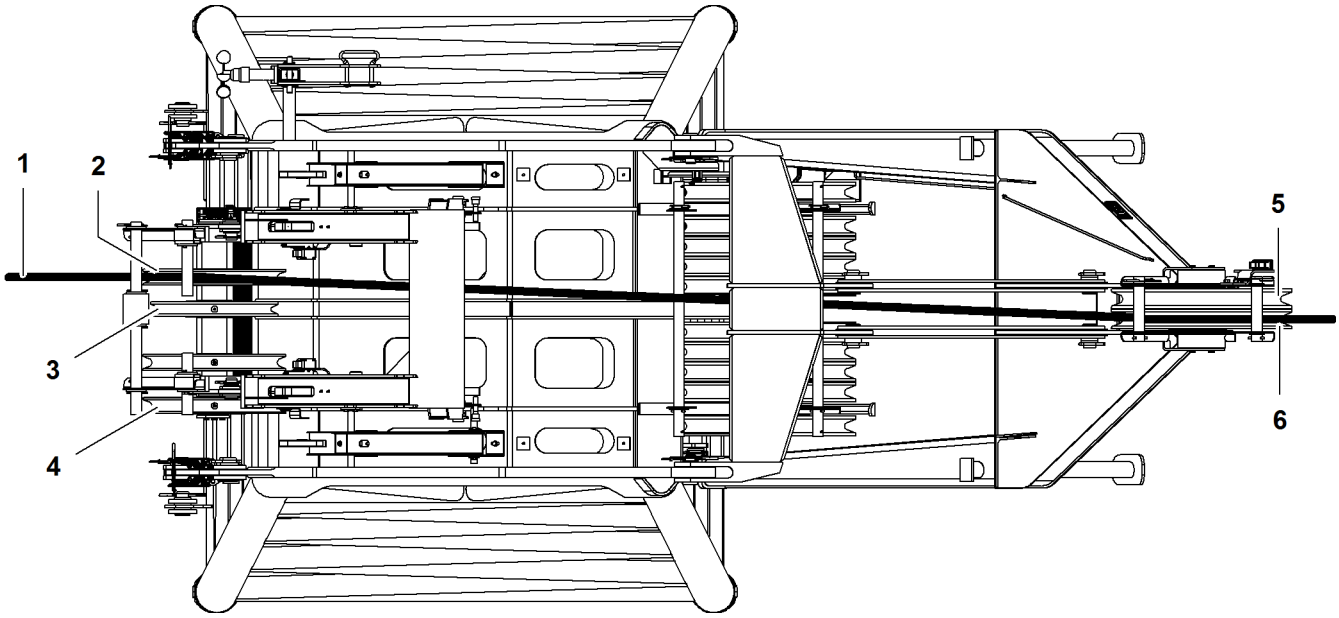

Fig. 3517: Rope run of auxiliary jib (36 t (79300 lb)) (illustration of principle)

1	Winch2 rope	**3**	Pulley for rope of jib luffing winch	**5**	Second pulley* for triple reeving of auxiliary jib (36 t (79300 lb))
2	Left gantry pulley of main boom head	**4**	Right gantry pulley (2x) of main boom head	**6**	Pulley of auxiliary jib

The rope of winch2 **1** runs from the left gantry pulley **2** to the auxiliary jib pulley **6**.

The rope of winch1 runs from one of the right gantry pulleys **4** to the required pulley on the main boom head.

7.8.9 Reeving diagram - jib luffing winch as auxiliary winch

DANGER
Incorrect number of reevings!
Structural breakdown, toppling of machine.

▶ Choose the correct number of reevings as per the load chart.

LWN/LR.x/V03.01//Auslieferung/2015-06-03/en

copyright by LIEBHERR

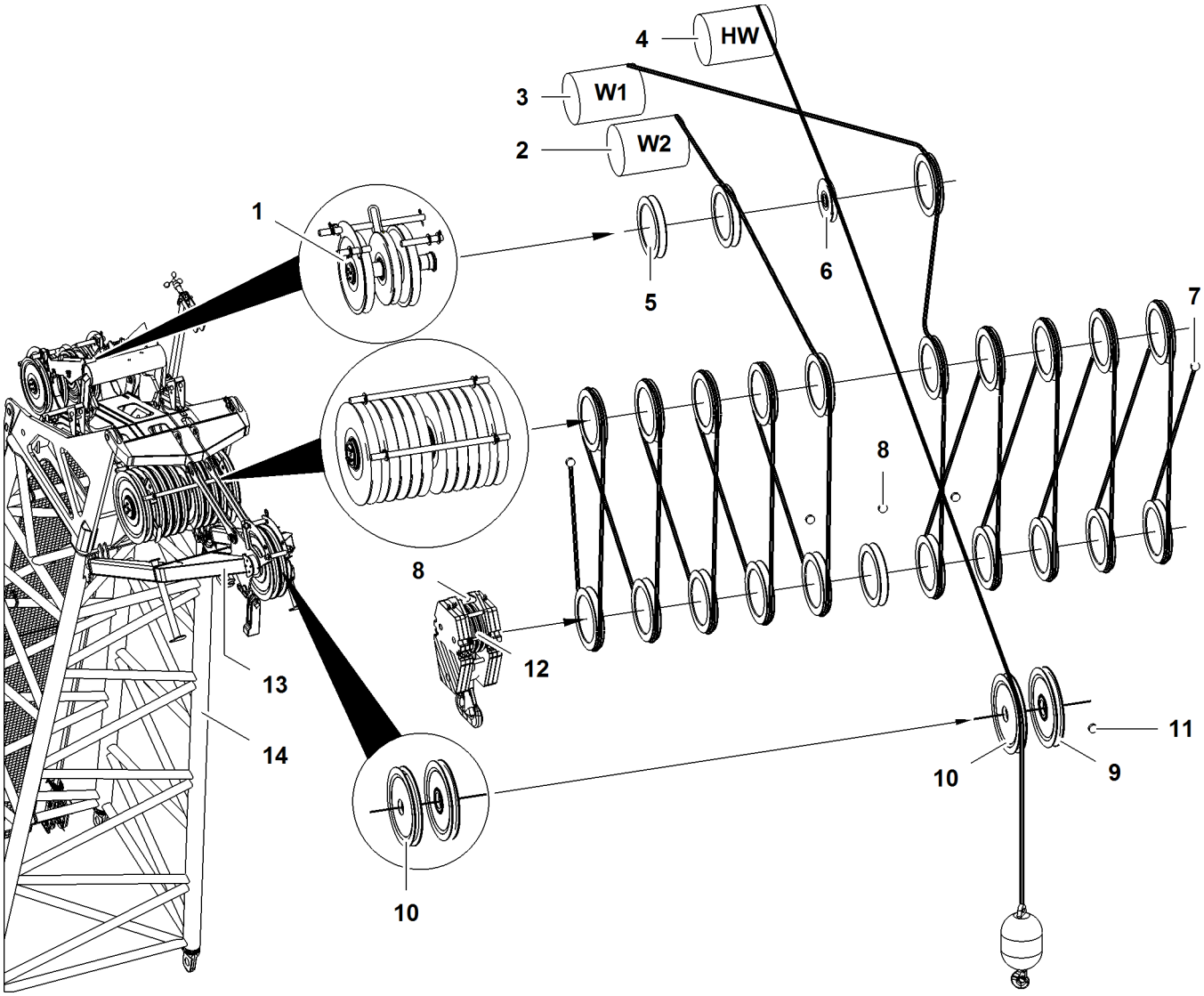

Fig. 3518: Reeving diagram - jib luffing winch as auxiliary winch (illustration of principle)

1	Gantry pulley (2x) of main boom head	**6**	Pulley for rope of jib luffing winch	**11**	Rope fixing point of auxiliary jib (36 t (79300 lb))
2	Winch2	**7**	Rope fixing points of main boom head	**12**	Pulley set of pulley block
3	Winch1	**8**	Rope fixing points of pulley block	**13**	Auxiliary jib (36 t (79300 lb))
4	Jib luffing winch as auxiliary winch*	**9**	Second pulley* for triple reeving of auxiliary jib (36 t (79300 lb))	**14**	Main boom head
5	Gantry pulley (only with LR 1004 und LR 1006)	**10**	Pulley of auxiliary jib (36 t (79300 lb))		

LWN/LR.x/V03.01//Auslieferung/2015-06-03/en

copyright by LIEBHERR

7.9 Assembly of main boom with derrick equipment*

7.9.1 Assembly of derrick boom

Notes

The illustrations have been simplified or schematically represented for reasons of uniformity and represent the principles of assembly. They do not provide a detailed representation of the components.

Unload and position the derrick boom head components

DANGER
Derrick boom head components with differing serial numbers are assembled!
Structural breakdown.

▶ Note the derrick identification plate on the derrick boom components.

DANGER
Wrong or defect parts or components!
Structural breakdown.

▶ Only use original Liebherr parts and original Liebherr components in perfect condition.

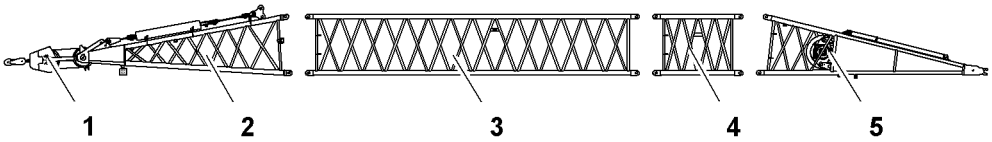

Fig. 3519: Unloading and positioning the derrick boom components

1 Derrick pulley block
2 Derrick boom head
3 Derrick boom section 11.7 m (38 ft)
4 Derrick boom section 3 m (20 ft)
5 Derrick boom base section

▶ Direct transport vehicles with derrick boom components.

▶ Rig derrick boom components with sling gear on rigging points.

▶ Unload derrick boom components onto wooden blocks using the basic machine or assist crane and position according to relevant system instructions.

LWN/LR.x/V03.01//Auslieferung/2015-06-03/en

copyright by LIEBHERR

Bolting the derrick boom

WARNING
Never stand in the inside of the derrick main boom sections during assembly! Serious injury.

▶ Never go inside the derrick boom sections.

▶ Drive in double-taper pins from the outside exclusively.

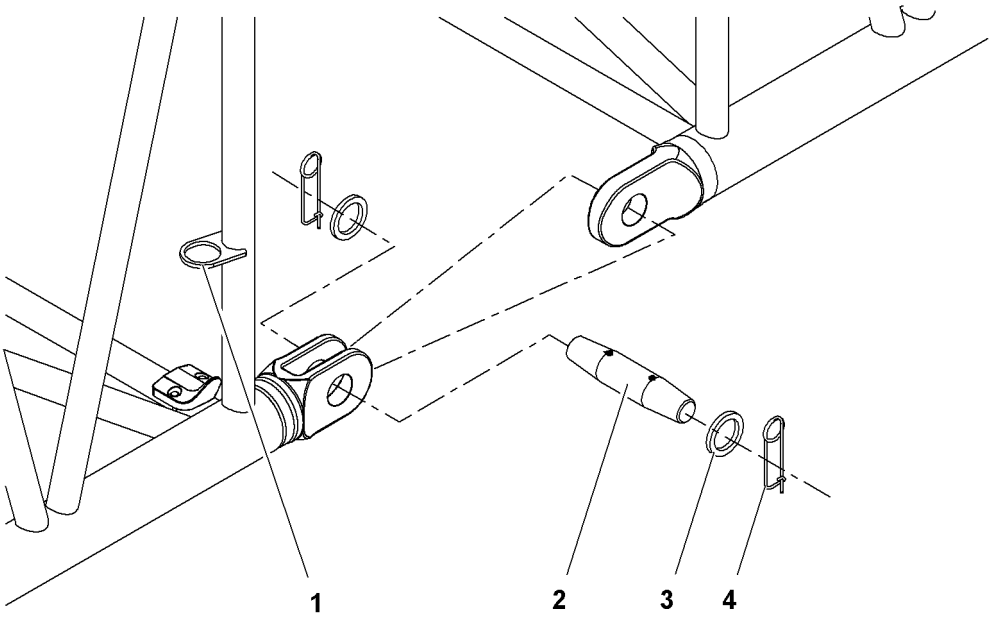

Fig. 3520: Bolting the derrick boom

1	Transport bracket (4x) for double-taper pins	**3**	Washer (8x)
2	Double-taper pin (4x)	**4**	Locking spring (8x)

▶ Remove the double-taper pins **2** from the transport brackets **1**.

Note

Liebherr recommends:
▶ To make assembly and disassembly easier, grease double-taper pin.

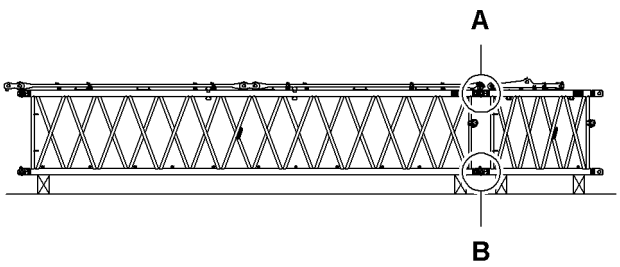

Fig. 3521: Bolt the derrick boom sections

A	Top pin connection point (2x)	**B**	Bottom pin connection point (2x)

▶ Bolt all derrick boom sections to one another on pin connection points **A + B**.

LWN/LR.x/V03.01//Auslieferung/2015-06-03/en

▶ Secure the double-taper pins with washers and safety pins.

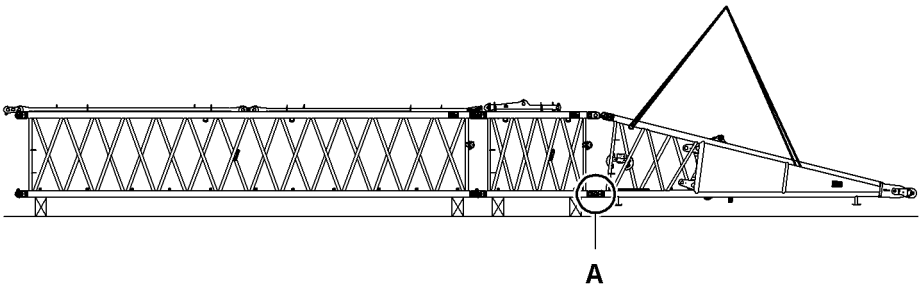

Fig. 3522: Pinning the derrick boom base section to the bottom derrick boom section

A Bottom pin connection point (2x)

▶ Rig derrick boom base section.

▶ Lift derrick boom base section to derrick boom section until bottom pin connection points **A** align.

▶ Pin derrick boom base section to the derrick boom section on bottom pin connection points **A**.

▶ Secure the double-taper pins with washers and safety pins.

▶ Place wooden blocks beneath derrick boom base section.

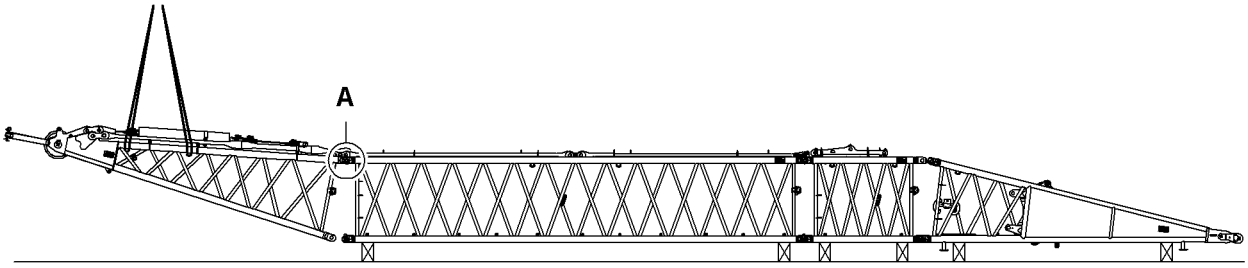

Fig. 3523: Pinning the derrick boom head to the top derrick boom section

A Top pin connection point (2x)

▶ Rig derrick boom head.

▶ Lift derrick boom head to derrick boom section until top pin connection points **A** align.

▶ Pin derrick boom head to derrick boom section on top pin connection points **A**.

▶ Secure double-taper pins with washers and locking springs.

LWN/LR.x/V03.01//Auslieferung/2015-06-03/en

copyright by
LIEBHERR

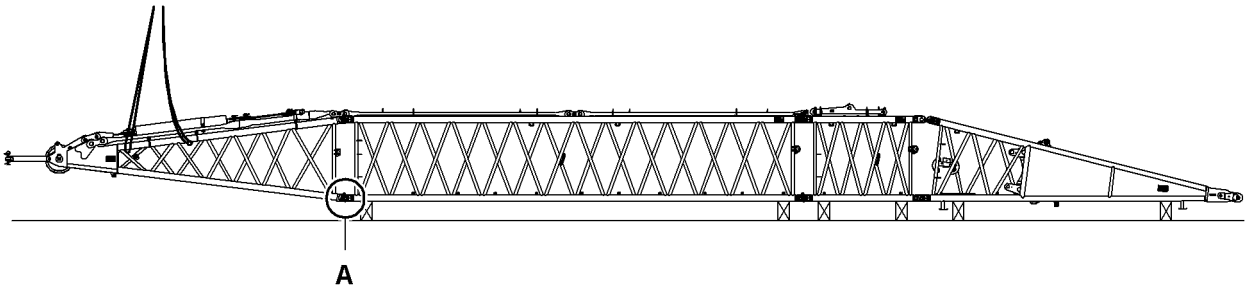

Fig. 3524: Pinning the derrick boom head to the bottom derrick boom section

A Bottom pin connection point (2x)

- ▶ Lower the derrick boom head until the lower pin connection points **A** match.
- ▶ Bolting the derrick boom head to the derrick boom section on the lower pin connection points **A**.
- ▶ Secure the double-taper pins with washers and safety pins.

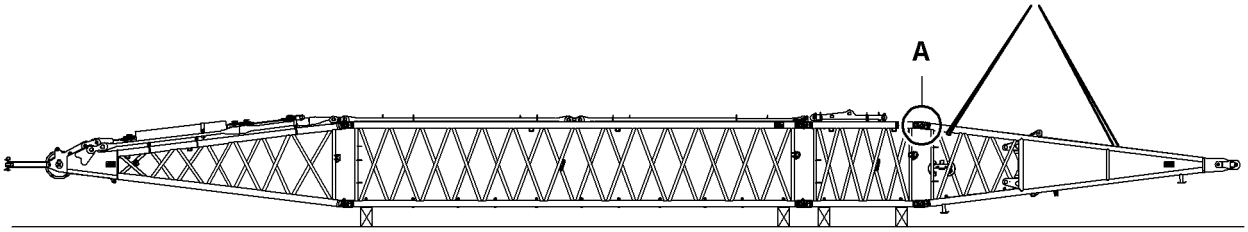

Fig. 3525: Pinning the derrick boom base section to the top derrick boom section

A Top pin connection point (2x)

- ▶ Rig derrick boom base section.
- ▶ Lift derrick boom base section until top pin connection points **A** align.
- ▶ Bolting the derrick boom base section to the derrick boom section on the upper pin connection points **A**.
- ▶ Secure the double-taper pins with washers and safety pins.

Connecting and checking boom fall arrest*

WARNING
Improper assembly of the boom fall arrest*!
Risk of falling off the boom.

- ▶ Ensure that the boom fall arrest* is in impeccable condition.
- ▶ Ensure that the boom fall arrest* is connected and secured between boom sections according to the specifications.

- ▶ Connect and check boom fall arrest* in accordance with additional documentationLIE-TAURUS.

LWN/LR.x/V03.01/Auslieferung/2015-06-03/en

copyright by LIEBHERR

Connecting the hydraulic lines

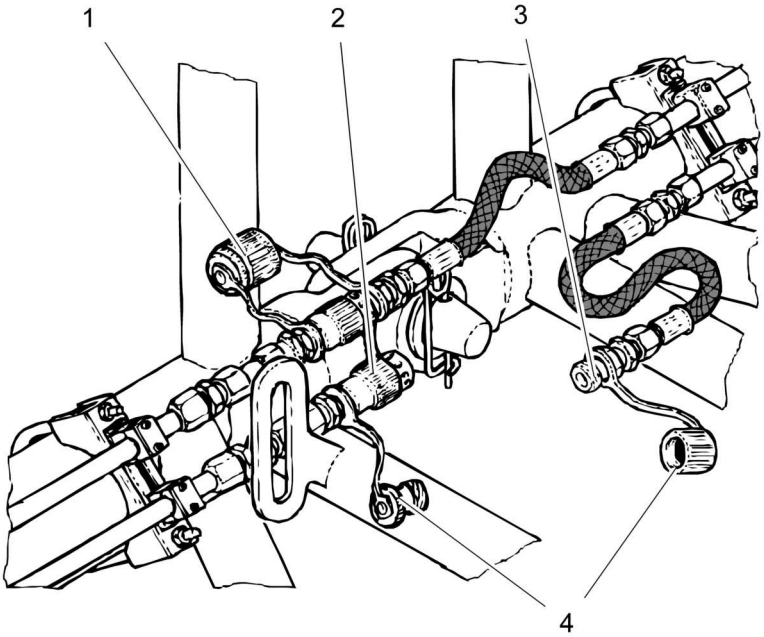

Fig. 3526: Connecting the hydraulic lines

1	Protective covers	**3**	Hydraulic couplings
2 + 3	Hydraulic couplings	**4**	Protective covers

The hydraulic lines of the individual derrick boom components must be connected.

▶ Remove protective covers **4** on hydraulic couplings **2 + 3**.

NOTICE
Soiled hydraulic couplings **2 + 3**!
Damage to the hydraulic system.

▶ Clean hydraulic couplings **2 + 3** before connecting.

▶ Connect and tighten hydraulic couplings **2 + 3**.

▶ Screw protective covers **1** together.

Connect the electric cables

NOTICE
Electric cables have been handled incorrectly!
Damage to electric line and plug.

▶ Do not pull electric line over sharp-edged objects.

▶ Do not crush or kink electric line.

▶ Keep the plug clean.

▶ Unwind electric line from cable bracket on derrick boom base section.

▶ Pull electric line towards derrick boom head.

▶ Insert electric line on terminal box.

LWN/LR.x/V03.01//Auslieferung/2015-06-03/en

copyright by
LIEBHERR

- ▶ Lock plug with support bracket.
- ▶ Suspend the strain relief carabiner.
- ▶ If required, rewind electric line back onto cable bracket.

Pinning the pendant straps

- ▶ Remove safety pins from the transport brackets for pendant straps.

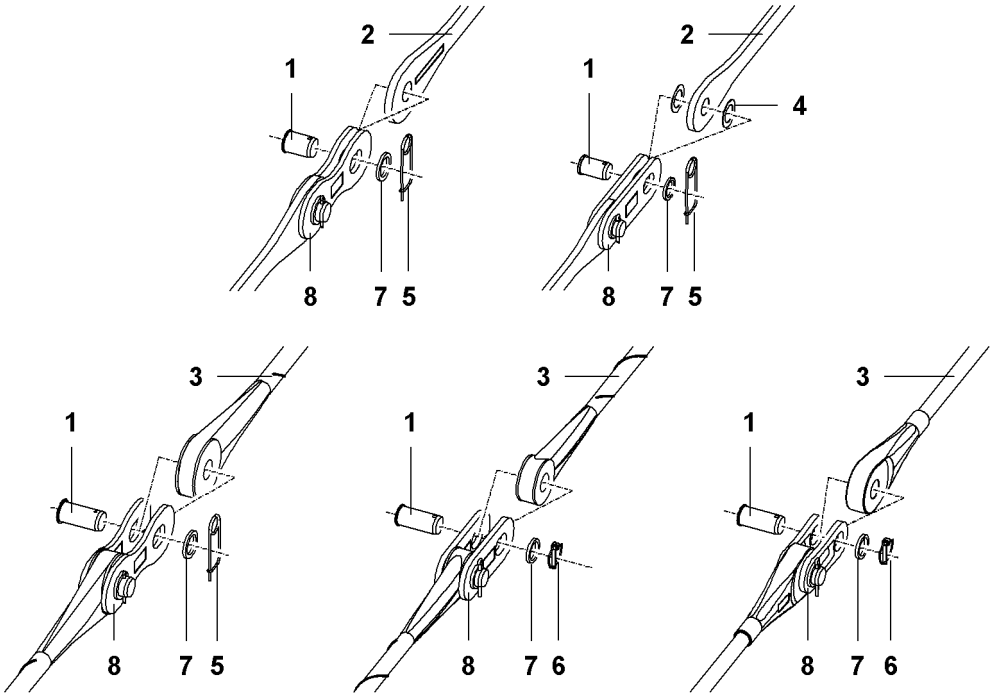

Fig. 3527: Bolt the pendant straps (schematic diagram of various pendant straps)

1	Pin	**5**	Safety pin
2	Steel pendant strap	**6**	Linch pin
3	Carbon-fibre pendant strap	**7**	Washer
4	Plastic washer (2x)	**8**	Connecting link

- ▶ Remove the pin **1** on the connecting link **8**.
- ▶ Position the pendant strap **2, 3** between the two coupling links **8**.
  or

If the pendant strap has plastic washers **4**:
Position the pendant strap **2** with plastic washers **4** on both sides between the two connecting links **8**.

- ▶ Insert pin **1** and secure with washers **7** and safety pin **5** or linch pin **6**.

LWN/LR.x/V03.01//Auslieferung/2015-06-03/en

copyright by
LIEBHERR

Bolting the pendant ropes for the suspended counter-weight

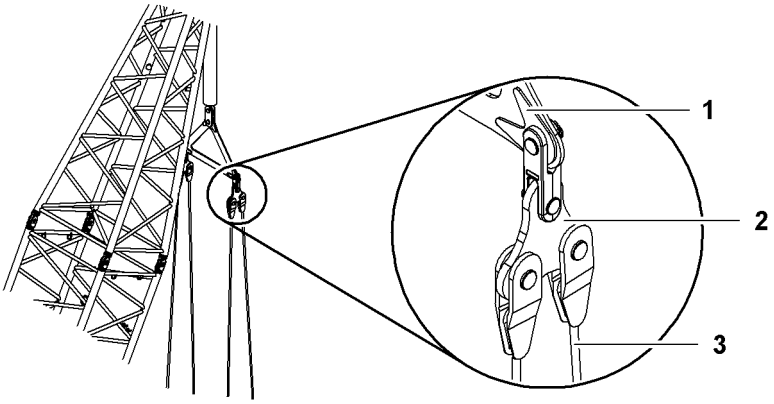

Fig. 3528: Bolting the pendant ropes for the suspended counterweight

1 Crossbar of hoist cylinder
2 Pendant rope crossbar
3 Pendant rope (4x)

▶ Place pendant ropes **3** on derrick boom.

▶ Pin pendant rope **2** with crossbar of hoist cylinder **1**.

CAUTION
Swinging pendant ropes **3** during assembly!
Slight injuries.

▶ Secure pendant ropes **3**.

▶ Secure pendant ropes **3** with a string or strap on the bottom part of the derrick boom.

Bolting the pendant straps for the wheeled counter-weight carriage

▶ Place pendant straps on derrick boom.

LWN/LR.x/V03.01//Auslieferung/2015-06-03/en

copyright by
LIEBHERR

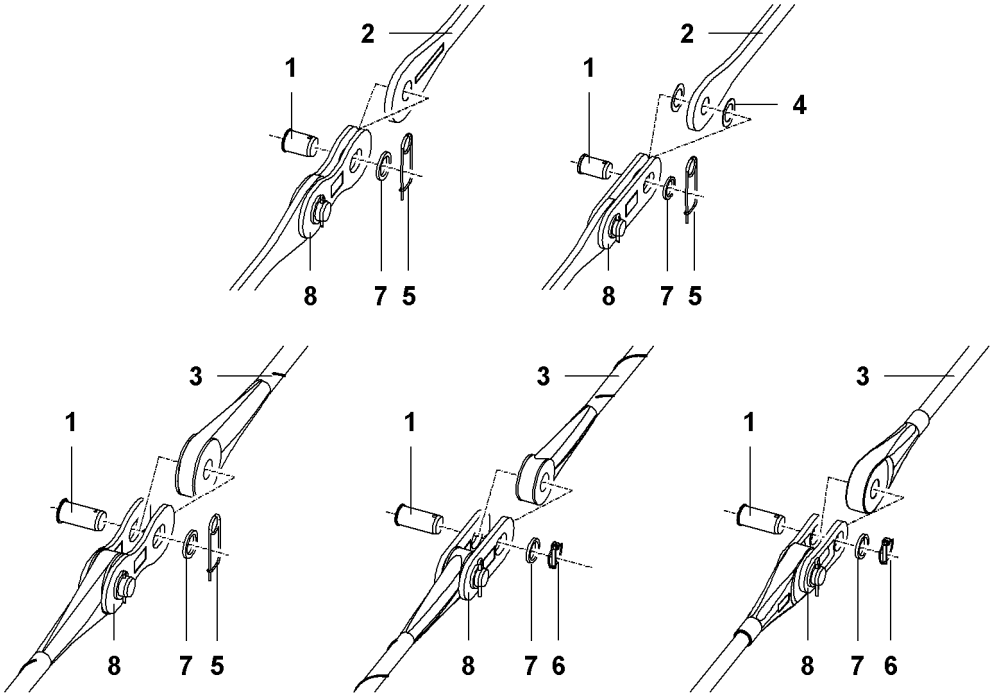

Fig. 3529: Bolt the pendant straps (schematic diagram of various pendant straps)

1	Pin	**5**	Safety pin
2	Steel pendant strap	**6**	Linch pin
3	Carbon-fibre pendant strap	**7**	Washer
4	Plastic washer (2x)	**8**	Connecting link

▶ Remove the pin **1** on the connecting link **8**.

▶ Position the pendant strap **2 bzw. 3** between the two coupling links **8**.
or

If the pendant strap has plastic washers **4**:
Position the pendant strap **2** with plastic washers **4** on both sides between the two connecting links **8**.

▶ Insert pin **1** and secure with washers **7** and safety pin **5** or linch pin **6**.

CAUTION
Hanging pendant straps during assembly!
Slight injuries.

▶ Secure pendant straps.

▶ Secure pendant straps with a string or strap on the bottom part of the derrick boom.

Installing the derrick boom on the uppercarriage

Ensure that the following conditions are fulfilled:
❑ Cylinder adjustment functions are activated.

The derrick boom is bolted to the same shaft as A-frame 1.

LWN/LR.x/V03.01//Auslieferung/2015-06-03/en

copyright by
LIEBHERR

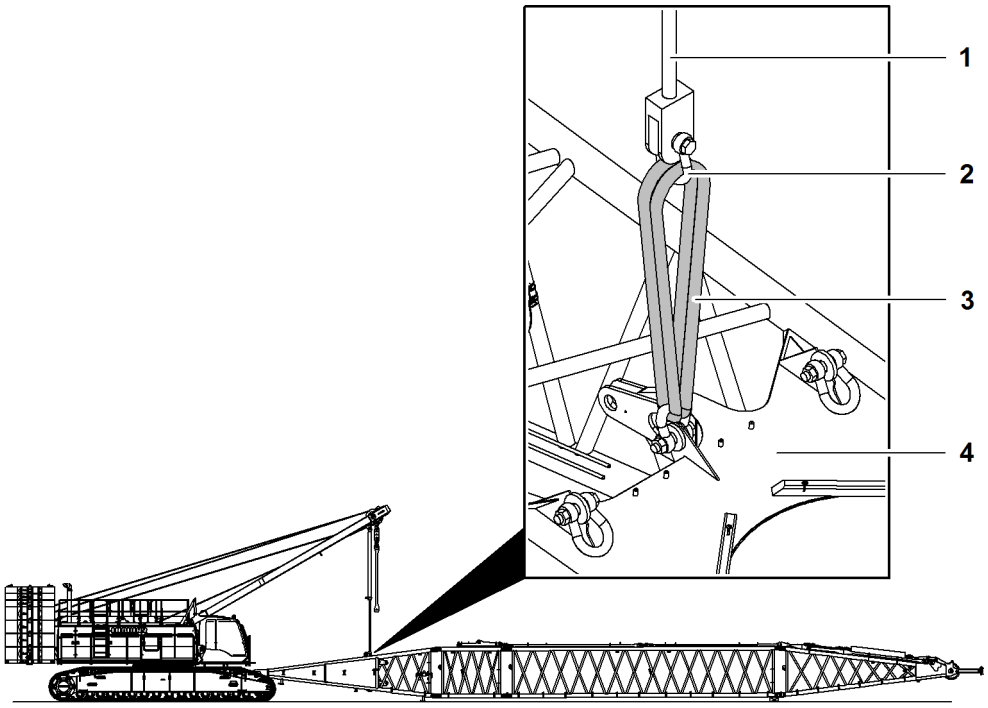

Fig. 3530: Pinning the assembly cylinder to the derrick boom base section

1	Assembly cylinder	**3**	Round sling 8 t (17,637 lb)
2	Shackle 25 t (55,115 lb) (2x)	**4**	Derrick boom base section

▶ Unwind main boom luffing winch.
  ▷ A-frame1 lowers.

▶ Extend assembly cylinder **1**.

▶ Pin assembly cylinders **1** with shackles **2** and round sling **3** to derrick boom base section **4**.

NOTICE
Dragging of the derrick boom along the ground not permitted!
Damage to derrick boom.

▶ Do not drag the derrick boom along the ground.

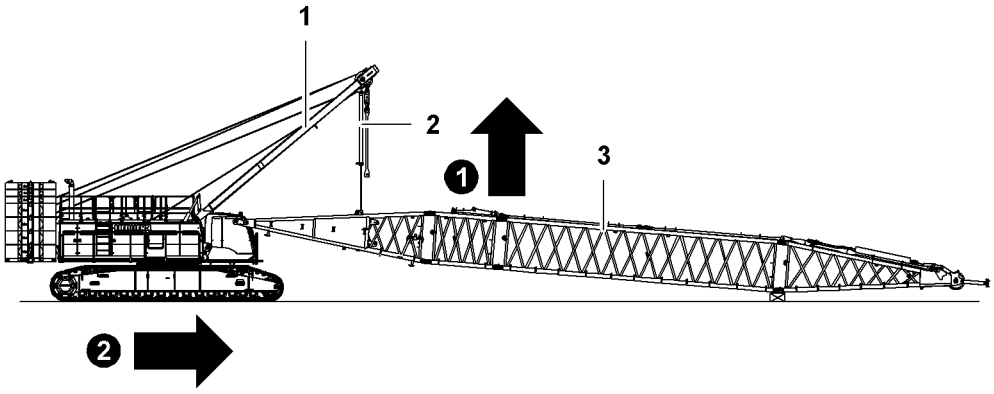

Fig. 3531: Lift derrick boom and move machine forwards

1	A-frame1	**3**	Derrick boom
2	Assembly cylinder		

▶ Lift derrick boom **3** with assembly cylinder **2**.

LWN/LR.x/V03.01//Auslieferung/2015-06-03/en

copyright by
LIEBHERR

- ▶ Wind up main boom luffing winch.
  ▷ A-frame1 **1** lifts.
- ▶ Move machine forward until derrick boom **3** is located in front of A-frame1 **1** pivot points.

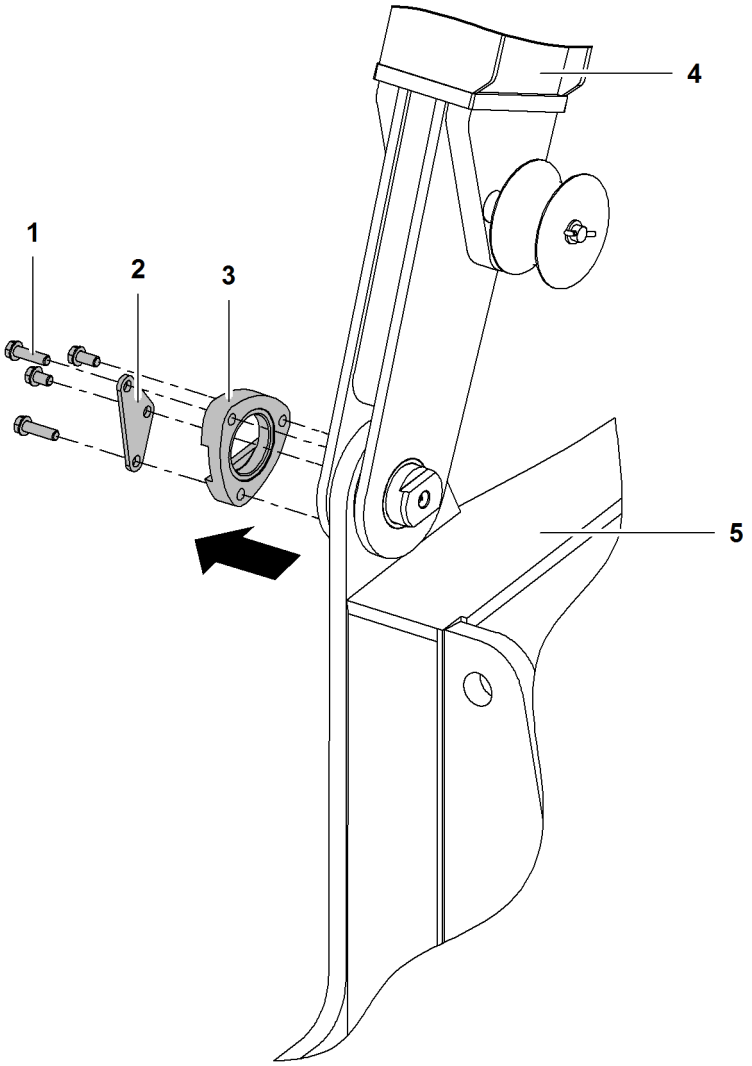

Fig. 3532: Removing A-frame1 locking elements

1	Screw (4x) with washers	**4**	A-frame1
2	Plate	**5**	Uppercarriage
3	Spacer washer		

- ▶ Remove and store screws **1** and plate **2**.
- ▶ Remove and put spacer **3** on one side.
- ▶ Repeat procedure on opposite side.

LWN/LR.x/V03.01//Auslieferung/2015-06-03/en

copyright by
LIEBHERR

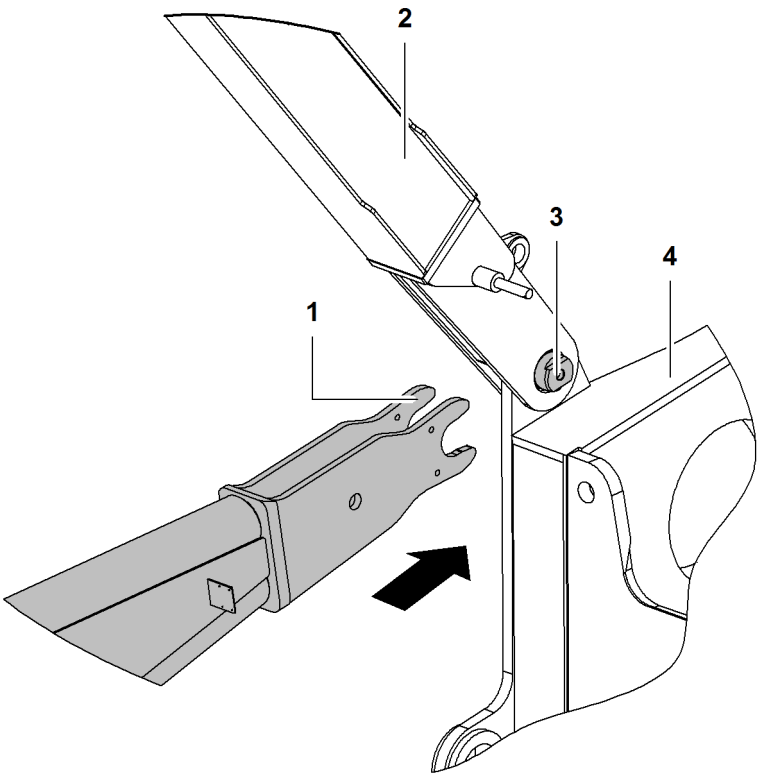

Fig. 3533: Placing the forks of the derrick boom base section on pins

1	Forks of the derrick boom base section	**3**	Pin
2	A-frame1	**4**	Uppercarriage

▶ Place forks **1** of the derrick boom base section both sides on pins **3** of A-frame1 **2**.

LWN/LR.x/V03.01//Auslieferung/2015-06-03/en

copyright by
LIEBHERR

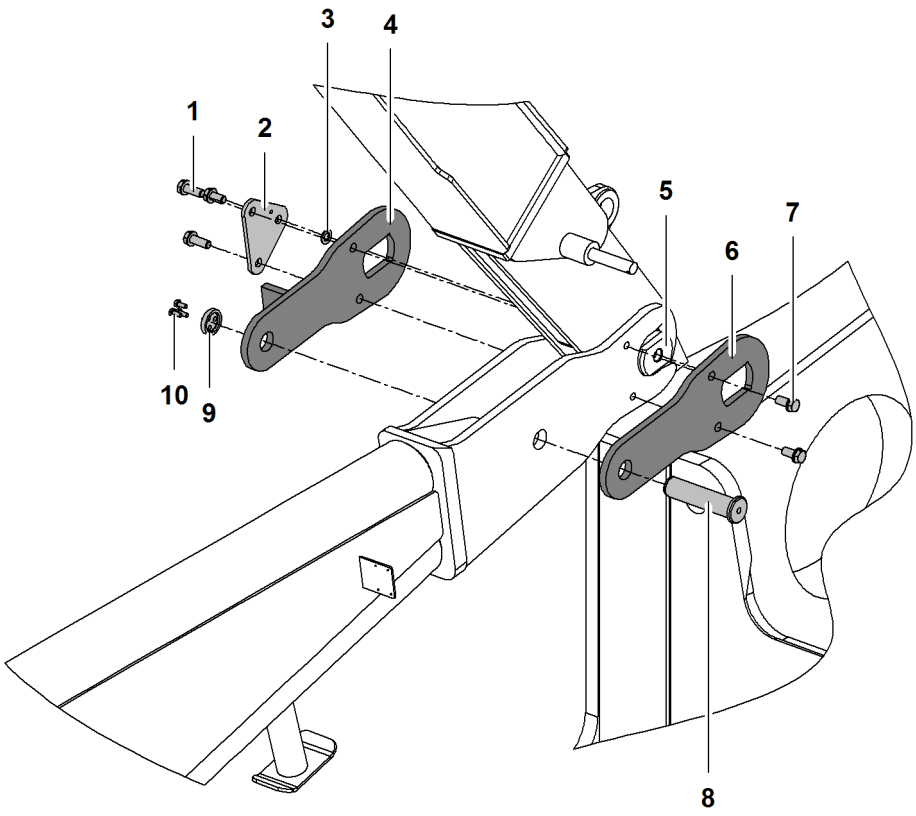

Fig. 3534: Securing the derrick boom

1	Screw (3x) with washers	**5**	Inner plate
2	Plate	**7**	Screw (2x) with washers
3	Washer	**8**	Pin
4	Pin of A-frame1	**9**	Washer with three holes
4	Outer plate with link	**10**	Screw (3x) with washers

▶ Place outer plate **4** with link on pins **4** of A-frame1.

▶ Place inner plate **5** on pins **4** of A-frame1.

Note
If the pin **4** of A-frame1 is not in the right position, the pin **4** must be aligned as described below!

▶ Put on outer plate **4** with link.

▶ Secure outer plate **4** with link with washer **3**, plate **2** and a screw **1** with disk.

▶ Align pins **4**: knock with hammer onto link of external plate **5**.

▶ Secure inner plate **5** with screws **7** and washers.

▶ Secure outer plate **4** with link with washer **3**, plate **2** and screws **1** with disks.

▶ Pin **8** must be inserted from the outside.

▶ Secure pins **8** with washer **9** with three holes and screws **10** with disks.

▶ Release assembly cylinder from derrick boom base section.

LWN/LR.x/V03.01//Auslieferung/2015-06-03/en

copyright by
LIEBHERR

Connecting hydraulic lines and electric lines with the uppercarriage

NOTICE
Soiled hydraulic couplings!
Damage to the hydraulic system.

▶ Clean hydraulic couplings before connecting.

▶ Connect hydraulic lines with bulkhead plates on uppercarriage and tighten.

▶ Screw protective covers together.

NOTICE
Incorrect handling of electric lines!
Damage to electric line and plug.

▶ Do not pull electric line over sharp-edged objects.

▶ Do not crush or kink electric line.

▶ Keep the plug clean.

▶ Insert electric line of derrick boom into connecting plug on the uppercarriage.

▶ Lock plug with support bracket.

Reeve the Derrick pulley block

Ensure that the following conditions are fulfilled:
❑ Derrick winch is selected.
❑ The derrick pulley block is attached and bolted to the transport fixation on the derrick boom head.

Reeve derrick rope rigging with auxiliary rope

NOTICE
Improper reeving of derrick winch rope!
Damage to derrick winch rope.

▶ Install derrick winch rope without twists.

▶ Do not install any swirls in derrick winch rope.

There must be no slacking of the rope when unwinding.

▶ Slowly unwind derrick winch rope.

LWN/LR.x/V03.01//Auslieferung/2015-06-03/en

copyright by
LIEBHERR

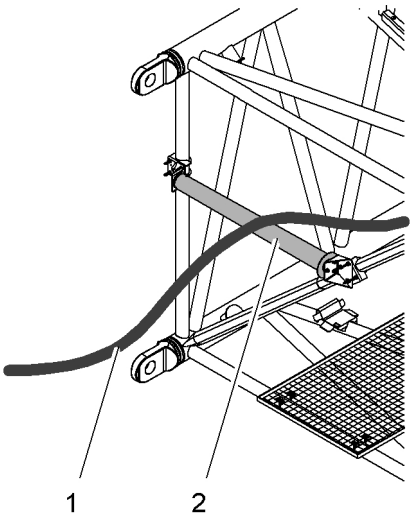

Fig. 3535: Reeve derrick rope rigging with auxiliary rope

1 Rope of derrick winch **2** Rope protection roller

▶ Guide rope **1** of derrick winch across every rope protection roller **2**.

▶ Pull rope **1** of derrick winch towards derrick boom head.

▶ Connect rope **1** of derrick winch with auxiliary rope reeved between derrick boom head and derrick rope rigging.

No slack rope may form during unwinding.

▶ Unwind rope **1** of derrick winch up to rope fixing point.

▶ Remove auxiliary rope from rope **1** of derrick winch.

▶ Attach rope **1** of derrick winch to rope fixing point of derrick boom head.

Reeving the derrick rope rigging without auxiliary rope

NOTICE
Improper reeving of derrick winch rope!
Damage to derrick winch rope.

▶ Install derrick winch rope without twists.

▶ Do not install any swirls in derrick winch rope.

There must be no slacking of the rope when unwinding.

▶ Slowly unwind derrick winch rope.

LWN/LR.x/V03.01//Auslieferung/2015-06-03/en

copyright by
LIEBHERR

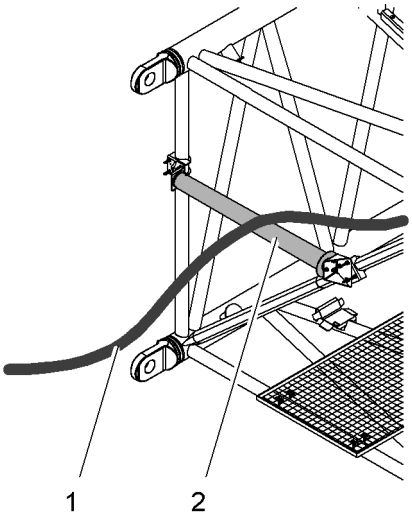

Fig. 3536: Reeving the derrick rope rigging without auxiliary rope

1 Rope of derrick winch **2** Rope protection roller

▶ Guide rope **1** of derrick winch across every rope protection roller **2**.

▶ Pull rope **1** of derrick winch towards derrick boom head.

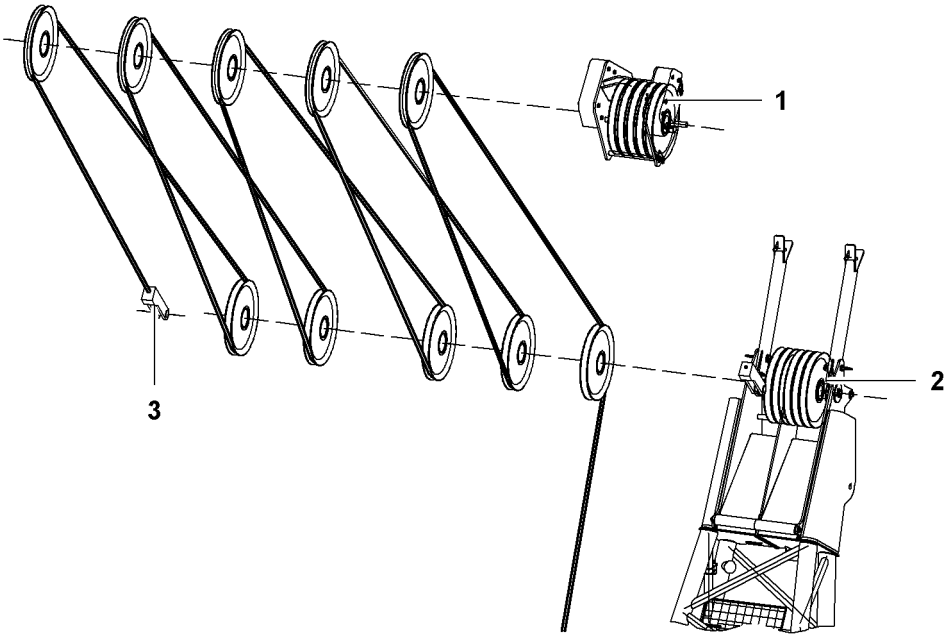

Fig. 3537: Derrick pulley block rope reeving system

1 Derrick pulley block **3** Rope fixation
2 Derrick boom head

▶ Reeve in rope of derrick winch according to reeving diagram.

▶ Attach rope of derrick winch on rope fixing point **3** of derrick boom head **2**.

LWN/LR.x/V03.01//Auslieferung/2015-06-03/en

copyright by
LIEBHERR

Release transport lashing from the derrick pulley block

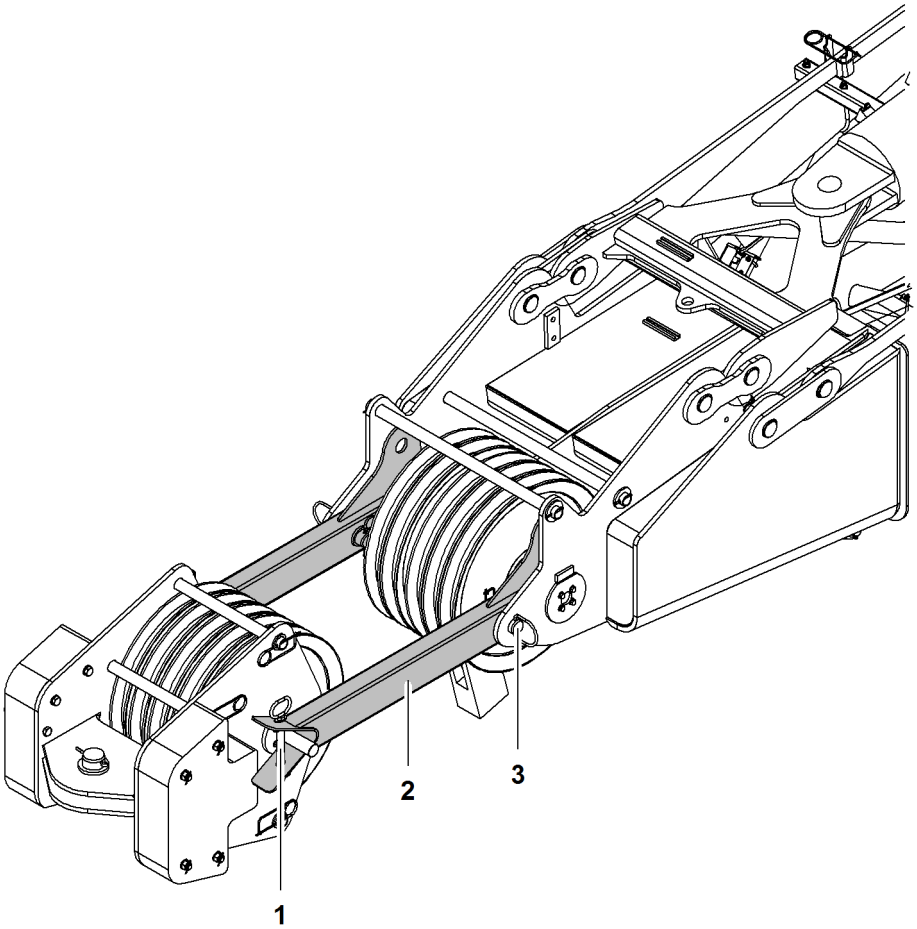

Fig. 3538: Undoing transport brackets from derrick rope rigging

1 Locking pin (2x)
2 Transport bracket (2x)
3 Pin (2x)

▶ Remove locking pins **1** on transport brackets **2** and place in temporary storage.

Pinning A-frame1 equalizer to derrick boom pendant straps

WARNING
Do not stand below A-frame1!
Severe injury.

▶ Make sure that nobody is located in the danger zone.

▶ Leave the danger area.

LWN/LR.x/V03.01//Auslieferung/2015-06-03/en

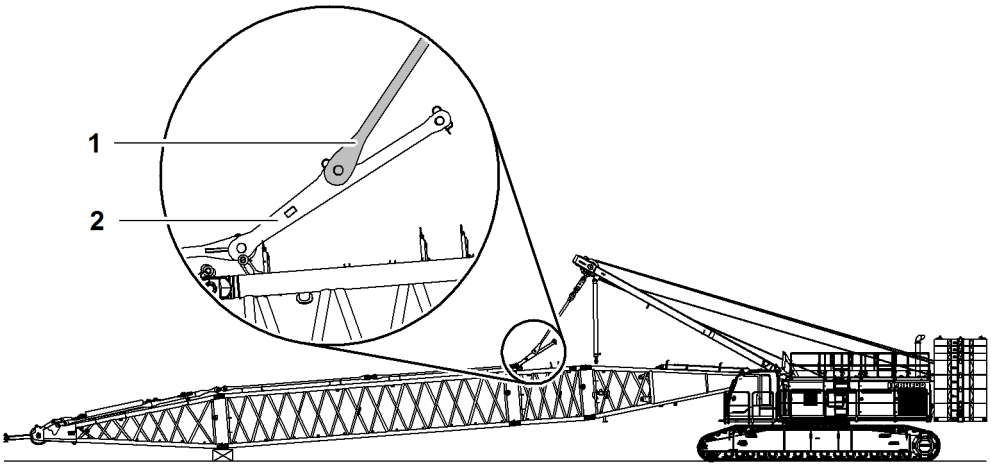

Fig. 3539: Pinning A-frame1 equalizer to derrick boom pendant straps

1 A-frame1 equalizer
2 Derrick boom pendant straps

▶ Lower A-frame1 until A-frame1 equalizer **1** can be pinned with derrick boom pendant straps **2**.

▶ Pin A-frame1 equalizer **1** to derrick boom pendant straps **2**.

▶ Secure pins with washers and locking springs.

Moving the lightning rods* into working position

Installation positions of lightning rods on derrick boom head

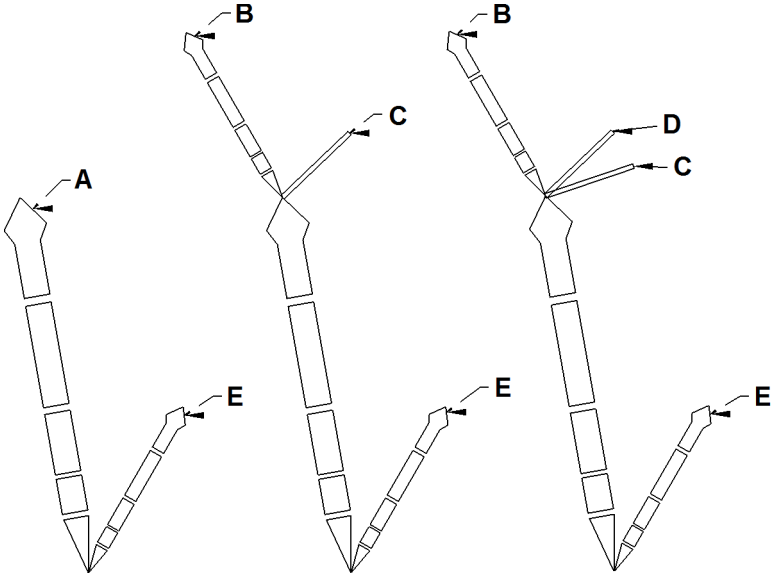

Fig. 3540: Installation positions of lightning rods on derrick boom head

A Main boom head
B Jib head
C A-frame2
D A-frame3
E Derrick boom head

Boom configuration	Number of light-ning rods	Installation positions
Main boom + derrick	2	A + E

LWN/LR.x/V03.01//Auslieferung/2015-06-03/en

copyright by LIEBHERR

Boom configuration	Number of lightning rods	Installation positions
Main boom + fixed jib + derrick	3	B + C + E
Main boom + luffing jib + derrick	4	B + C + D + E

Tab. 486: Installation positions and number of lightning rods on derrick boom head

Moving the lightning rods* on the derrick boom head into working position

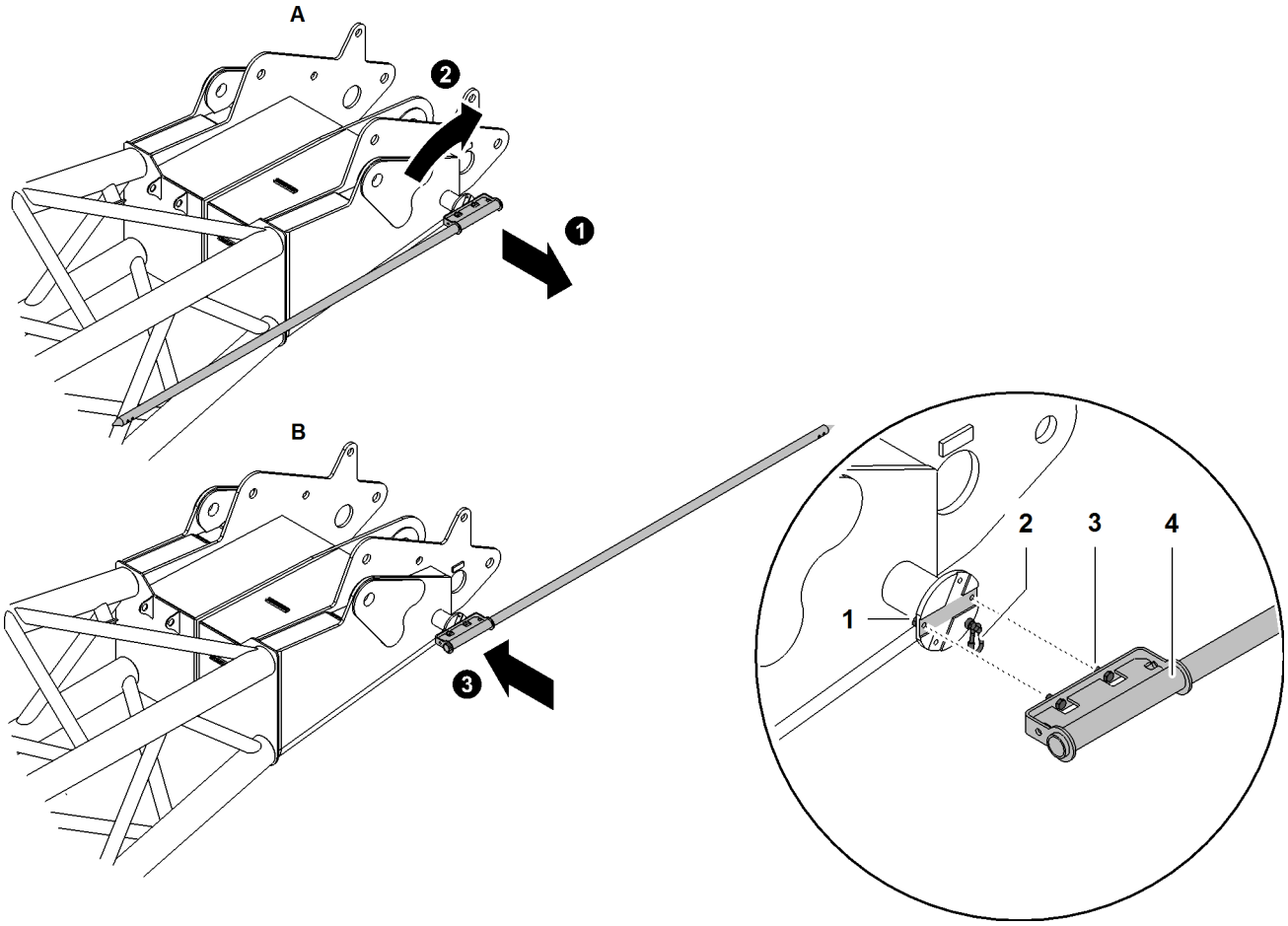

Fig. 3541: Moving the lightning rods on the derrick boom head into working position*

A	Transport position	**1**	Nut (2x)	**3**	Screw (2x)
B	Working position	**2**	Safety rope	**4**	Lightning rod

▶ Undo safety rope **2**.

▶ Undo nuts **1**.

▶ Undo screws **3**.

▶ Move lightning rod **4** from transport position **A** to working position **B**.

Note
Liebherr recommends:

▶ Grease threads of the screws **3**.

▶ Attach lighting rod **4** withscrews **3**.

LWN/LR.x/V03.01//Auslieferung/2015-06-03/en

▶ Lock screws **3** with nuts **1**.

NOTICE
Safety rope not attached!
Dropping parts.

▶ Ensure that safety rope **2** is attached.

▶ Attach safety rope **2**.

NOTICE
Tip not installed!
Improperly deflected current.
Dropping parts.

▶ Ensure that the tip on the lightning rod **4** is installed.

▶ Ensure that the screws of the tip are tightened.

▶ Ensure that the tip on the lightning rod **4** is installed.

▶ Ensure that the screws of the tip are tightened.

Raise derrick boom

Ensure that the following conditions are fulfilled:
❑ All work on the derrick boom has been completed.
❑ No loose parts or tools have been left on the derrick boom.

WARNING
Falling objects!
Severe injury.

▶ Any loose parts and tools must be removed from the derrick boom.

▶ Make sure that nobody is located in the danger zone.

▶ Leave the danger area.

▶ Slowly reeve main boom luffing winch.
  ▷ Derrick boom pendant straps are tensioned.

▶ Wind up main boom luffing winch further.
  ▷ Derrick boom lifts off the ground.
  ▷ Derrick rope rigging swings downwards.

LWN/LR.x/V03.01//Auslieferung/2015-06-03/en

copyright by
LIEBHERR

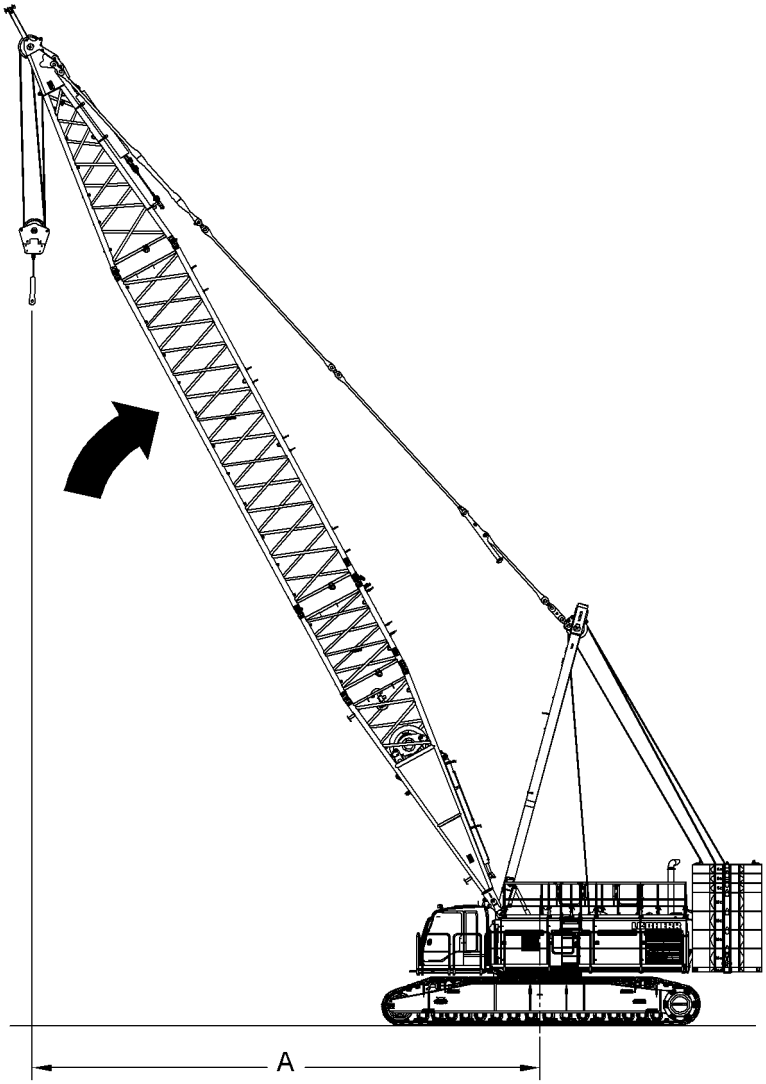

Fig. 3542: Erecting the derrick boom

DANGER
Critical angle is exceeded!
Machine toppling over.

- ▶ Do not lift derrick boom more than 70°.
- ▶ Do not undercut minimum radius **A** of derrick boom of 11.5 m (37‘ 9“ ft-in).

- ▶ Erect derrick boom until it is in the desired position.

7.9.2 Assembling the main boom

Ensure that the following conditions are fulfilled:
- ❑ Assembly functions switched on.
- ❑ The machine is ready for use as an assembly crane, or an assist crane is available.
- ❑ Work plans have been drawn up.
- ❑ The length and the order of the main boom intermediate pieces are known.
- ❑ The installation positions of the rope guide are known.
- ❑ The assembly positions of the mid-point suspensions are known.

LWN/LR.x/V03.01//Auslieferung/2015-06-03/en

copyright by
LIEBHERR

❑ Any accessories required are available.

Notes

The illustrations have been simplified or schematically represented for reasons of uniformity and represent the principles of assembly. They do not provide a detailed representation of the components.

Programming the setup

DANGER
Unacceptable setup!

▶ Only program a setup on the machine that is in accordance with the load chart.

▶ Programming the setup on the machine (For more information see: 4.13 Programming the setup, page 870) .

Unloading and positioning the main boom section

DANGER
Slewing of uppercarriage with rear counterweight attached not permitted!
Machine toppling over.

▶ Slew the uppercarriage according to the table (For more information see: Lifting and pinning the rear counterweight, page 1224) exclusively.

DANGER
Incorrect or defect parts or components!
Structural breakdown.

▶ Only use original Liebherr parts and original Liebherr components in perfect condition.

DANGER
Improperly assembled boom configuration!
Structural breakdown.

▶ Ensure that the assembled boom configuration is compatible with the programmed setup.

LWN/LR.x/V03.01//Auslieferung/2015-06-03/en

copyright by LIEBHERR

DANGER
Incorrect arrangement of boom sections!
Structural breakdown.

- ▶ Assemble the main boom according to the relevant system requirements.
- ▶ A boom section of 6 m (20 ft) cannot be replaced by two boom sections of 3 m (10 ft).
- ▶ A boom section of 12 m (40 ft) cannot be replaced by two boom sections of 6 m (20 ft).
- ▶ Make sure that with model LR 1300 only main boom sections with the system dimensions 2821.24 are installed (For more information see: 1.9 Distinguishing features main boom sections LR 1300 and LR 1300 SX, page 157) .
- ▶ Make sure that with model LR 1300 SX only main boom sections with the system dimensions 2821.30 are installed (For more information see: 1.9 Distinguishing features main boom sections LR 1300 and LR 1300 SX, page 157) .

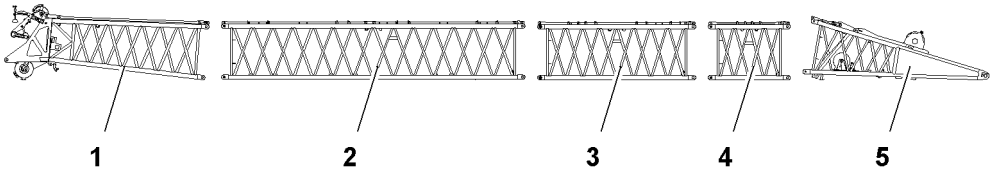

Fig. 3543: Unloading and positioning the main boom components

1	Boom head section	**4**	Boom section 3 m (10 ft)
2	Boom section 12 m (40 ft)	**5**	Boom base section
3	Boom section 6 m (20 ft)		

- ▶ Direct transport vehicles with boom components.
- ▶ Lash main boom sections by attaching lifting equipment to the lifting points.
- ▶ Unload main boom sections onto wooden blocks using the basic machine or assist crane and position according to the relevant system instructions.

Assembling the ladder* for the boom

CAUTION
Unauthorized use of ladder!
Fall from ladder.

- ▶ Only use the ladder with boom sections on which the required ladder angle of 75° to 80° can be observed.

CAUTION
The ladder must not be placed under an impermissible dynamic load!
Fall from ladder, break of ladder.

- ▶ The ladder must only be used for general assembly work on pendant straps and pin connection points on the boom sections.
- ▶ Do not stand on the ladder to knock in the boom section pins.
- ▶ The ladder must be checked for damage and cracks before it is fitted and before it is used.

LWN/LR.x/V03.01//Auslieferung/2015-06-03/en

copyright by
LIEBHERR

CAUTION
Take great care if walking on boom sections!
risk of falling from boom section.

- ▶ Only ever walk on boom sections if boom catwalks are fitted.
- ▶ A fall arrest system must be used when working on boom sections to prevent falling.

CAUTION
Slipping of the ladder!
Fall from ladder.

- ▶ Secure ladder against sliding.

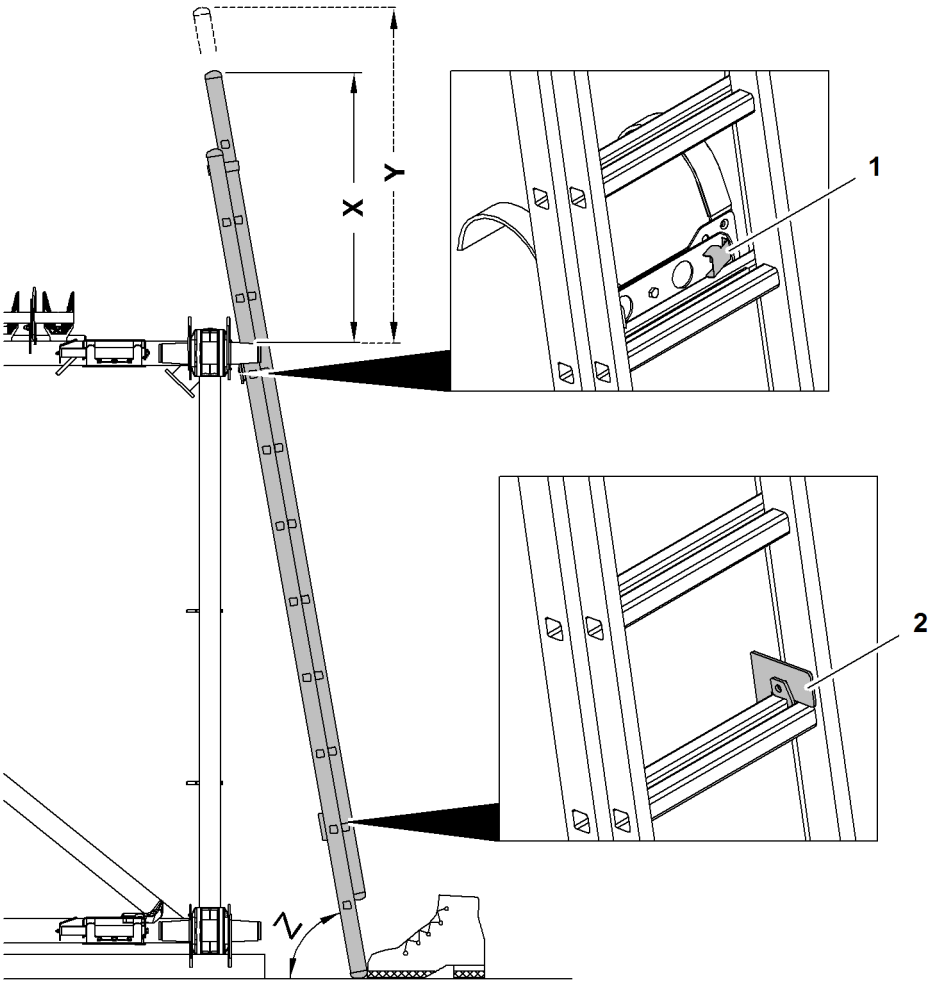

Fig. 3544: Assembling the ladder for the boom

1	Top locking element	**Y**	Maximum height
2	Bottom locking element	**Z**	Ladder angle
X	Minimum height		

The ladder angle **Z** must remain between 75° and 80°.

The minimum height **X** must be at least 1000 mm (3‘ 3“ ft-in).

If the maximum height **Y** is exceeded, the ladder topples.

- ▶ Insert ladder support at belt pipe of boom section.

LWN/LR.x/V03.01//Auslieferung/2015-06-03/en

copyright by
LIEBHERR

CAUTION
Improperly extended ladder!
Fall from ladder.

- ▶ Observe slant angle **Z**.
- ▶ Observe minimum height **X**.
- ▶ Do not exceed maximum height **Y**.

- ▶ Extend extendable part of the ladder until minimum height **X** is exceeded.

CAUTION
Unsecured ladder!
Fall from ladder.

- ▶ Secure ladder against sliding.
- ▶ Ensure that locking elements engage.

- ▶ Check top locking element.
- ▶ Check bottom locking element.
  - ▷ Ladder for boom is installed:

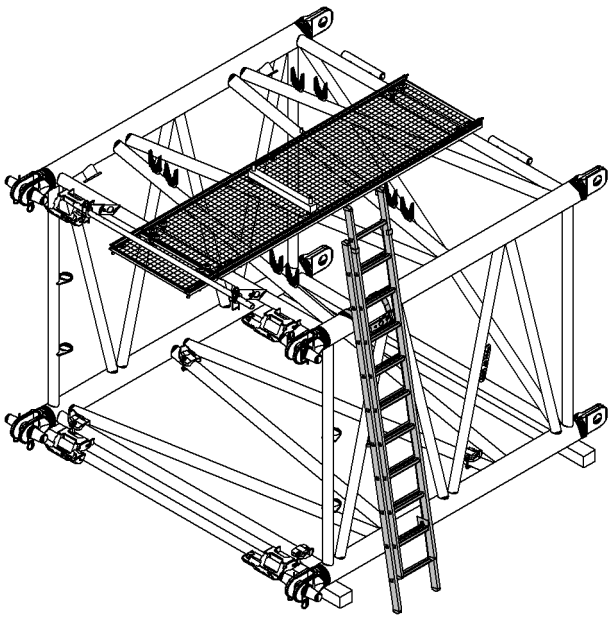

Fig. 3545: Ladder for boom is installed

Pinning together the main boom head, main boom sections and main boom base section

WARNING
Never stand in the inside of the main boom sections during assembly!
Serious injury.

- ▶ Never go inside the boom sections.
- ▶ Drive in double-taper pins from the outside exclusively.

LWN/LR.x/V03.01//Auslieferung/2015-06-03/en

Note

If a fixed jib (excluding fixed jib 1507) is going to be added:

▶ Bolt the boom head section and boom section to the upper pin connection points using double-taper pins from the A-frame 2 equalizer (jib backstay strap) of the fixed jib.

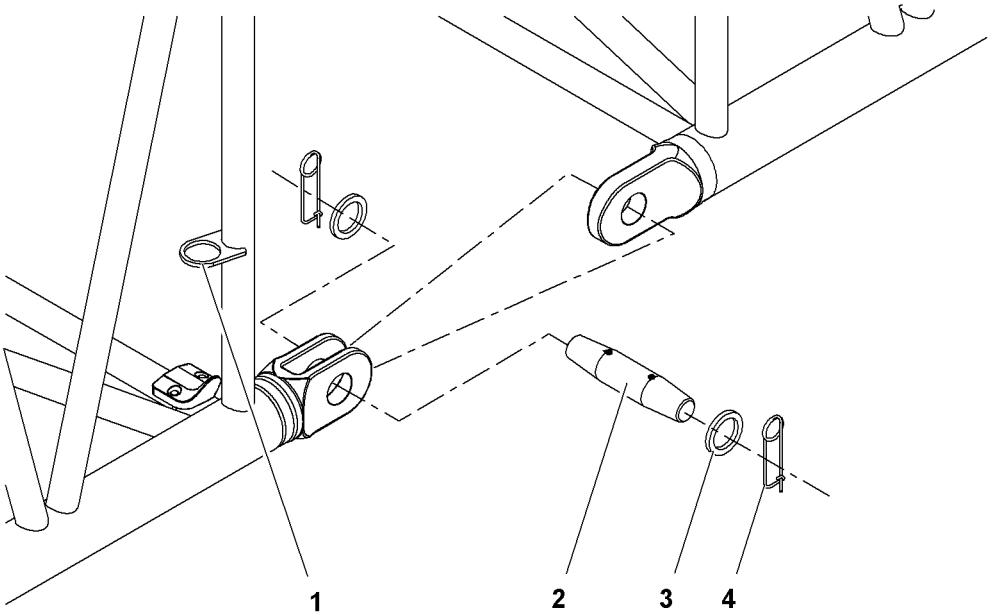

Fig. 3546: Bolting the main boom

1	Transport bracket (4x) for double-taper pins	**3**	Washer (8x)
2	Double-taper pin (4x)	**4**	Locking spring (8x)

▶ Remove the double-taper pins **2** from the transport brackets **1**.

Note

Liebherr recommends:

▶ To make assembly and disassembly easier, grease double-taper pin.

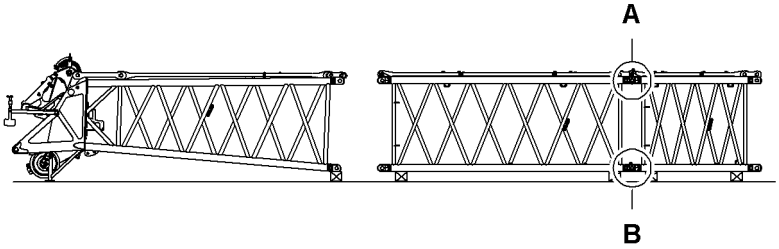

Fig. 3547: Bolting the main boom intermediate pieces

A	Top pin connection point (2x)	**B**	Bottom pin connection point (2x)

▶ Bolt all boom sections to one another on pin connection points **A + B**.

▶ Secure the double-taper pins with washers and safety pins.

LWN/LR.x/V03.01//Auslieferung/2015-06-03/en

copyright by
LIEBHERR

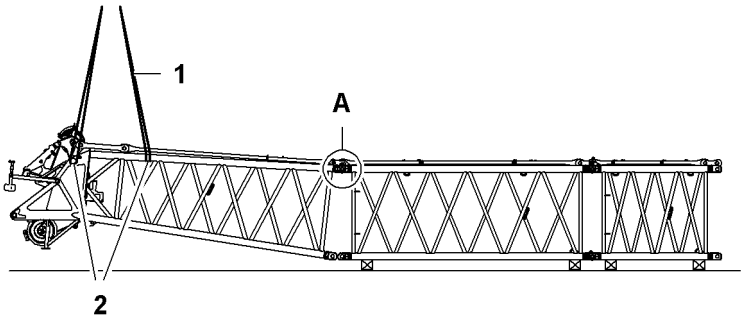

Fig. 3548: Bolting the boom head section to the boom sections at the top

1 Round sling (4x)
2 Rigging point (4x)
A Top pin connection point (2x)

▶ Attach the boom head section on the lifting points **2**.

▶ Lift the boom head section to the boom section until the upper pin connection points **A** match.

▶ Bolting the boom head section to the boom sections on the upper pin connection points **A**.

▶ Secure the double-taper pins with washers and safety pins.

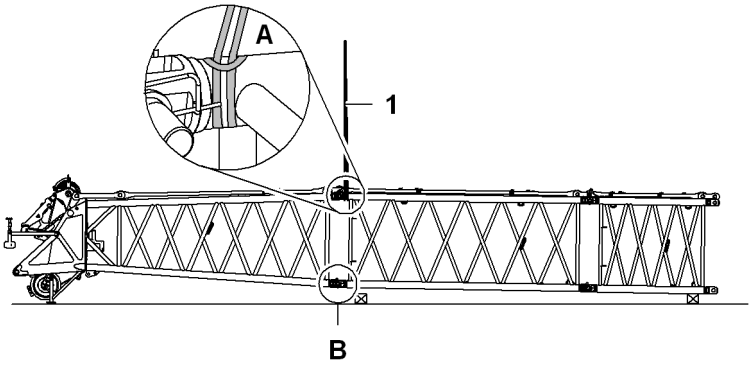

Fig. 3549: Bolting the boom head section to the boom sections at the bottom

1 Round sling (2x)
A Belt pipe (2x)
B Bottom pin connection point (2x)

▶ Attach boom section to chord pipes **A**.

▶ Lift the boom section until the lower pin connection points **B** match.

▶ Bolting the boom head section to the boom sections on the lower pin connection points **B**.

▶ Secure the double-taper pins with washers and safety pins.

LWN/LR.x/V03.01//Auslieferung/2015-06-03/en

copyright by
LIEBHERR

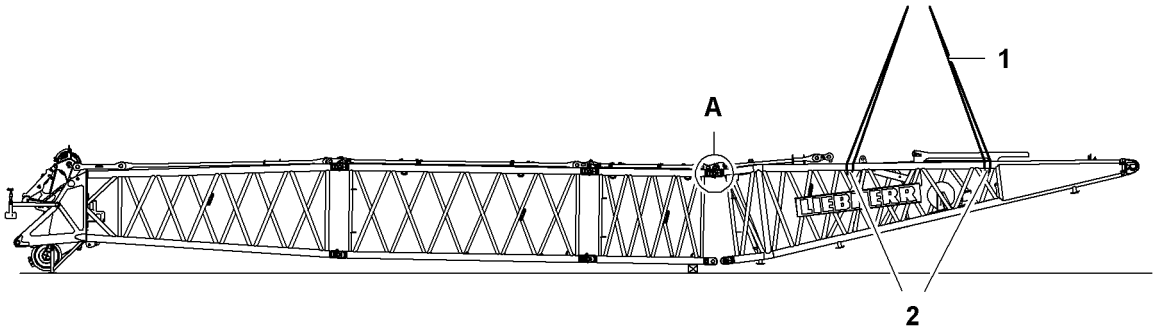

Fig. 3550: Bolting the boom base section to the boom sections at the top

1 Round sling (4x) **2** Rigging point (4x) **A** Top pin connection point (2x)

- ▶ Attach the boom base section on the lifting points **2**.
- ▶ Lift the boom base section to the boom section until the upper pin connection points **A** match.
- ▶ Bolting the boom base section to the boom sections on the upper pin connection points **A**.
- ▶ Secure the double-taper pins with washers and safety pins.

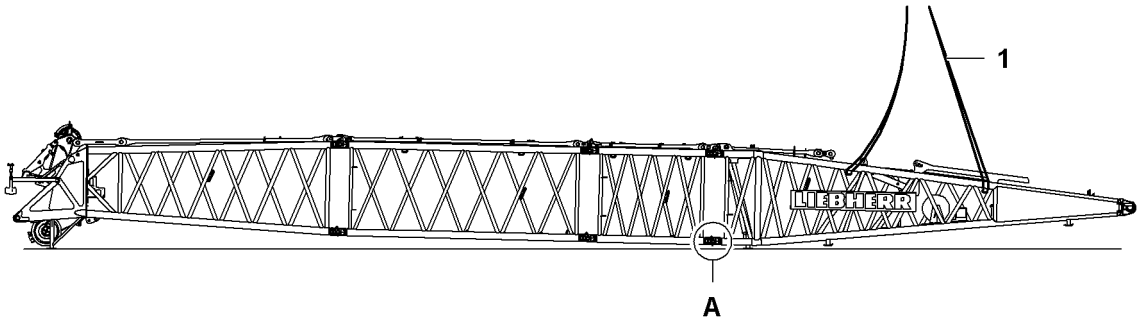

Fig. 3551: Bolting the boom base section to the boom sections at the bottom

1 Round sling (4x) **A** Bottom pin connection point (2x)

- ▶ Lower the boom base section until the lower pin connection points **A** match.
- ▶ Bolting the boom base section to the boom sections on the lower pin connection points **A**.
- ▶ Secure the double-taper pins with washers and safety pins.

Connecting and checking boom fall arrest*

WARNING
Improper assembly of the boom fall arrest*!
Risk of falling off the boom.

- ▶ Ensure that the boom fall arrest* is in impeccable condition.
- ▶ Ensure that the boom fall arrest* is connected and secured between boom sections according to the specifications.

- ▶ Connect and check boom fall arrest* in accordance with additional documentationLIE-TAURUS.

LWN/LR.x/V03.01//Auslieferung/2015-06-03/en

copyright by LIEBHERR

fit the rope guide

NOTICE
Incorrect assembly of the rope guide!
Risk of damage to the rope.

▶ Fit rope guide according to relevant system instructions.

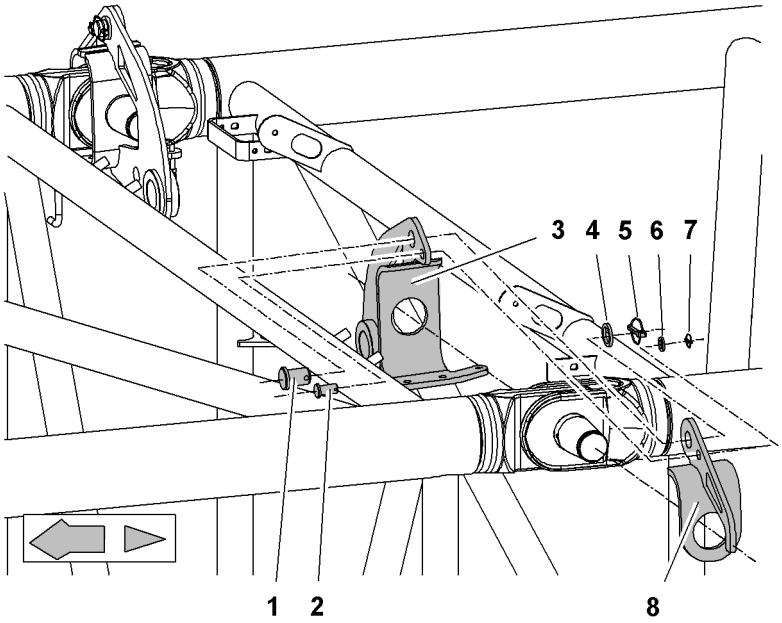

Fig. 3552: Fitting the rope guide forks

1	Pin	**5**	Linch pin
2	Pin	**6**	Washer
3	Inner section of fork	**7**	Linch pin
4	Washer	**8**	Outer section of fork

▶ Remove the safety pins and washers from both sides of the boom pin connection double-taper pin and stow away.

▶ Mount the inner and outer sections of the fork **3 + 8** on the double-taper pin.

▶ Pin the inner and outer sections of the **3 + 8** fork.

▶ Secure pin **1 + 2** with washers **4 + 6** and linch pins **5 + 7**.

LWN/LR.x/V03.01//Auslieferung/2015-06-03/en

copyright by
LIEBHERR

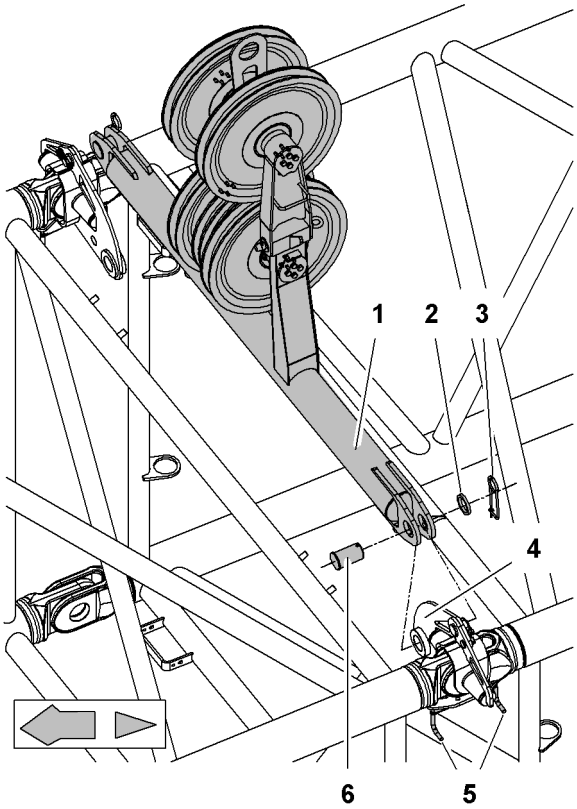

Fig. 3553: Attach rope guide

1	Rope guide	**4**	Fork
2	Washer	**5**	Screw (2x)
3	Safety pin	**6**	Pin

▶ Pin rope guide **1** to fork **4**.

▶ Secure the pin **6** with washer **2** and retaining spring **3**.

If the assembly position of the rope guide is identical to the assembly position of the mid-point suspension:
▶ pin the ropes on the mid-point suspension to the rope guide forks.

▶ Secure the pin with a washer and safety pin.

NOTICE
The screws **5** must not be tightened before the ropes on the mid-point suspension are pinned to the rope guide forks!
Risk of damage to the components.

Once the ropes on the mid-point suspension are pinned to the rope guide forks:
▶ tighten screws **5**.

▶ Use both screws **5** to vertically align the rope guide and manually fix it in place.

Pinning the pendant straps

▶ Remove safety pins from the transport brackets for pendant straps.

LWN/LR.x/V03.01//Auslieferung/2015-06-03/en

copyright by
LIEBHERR

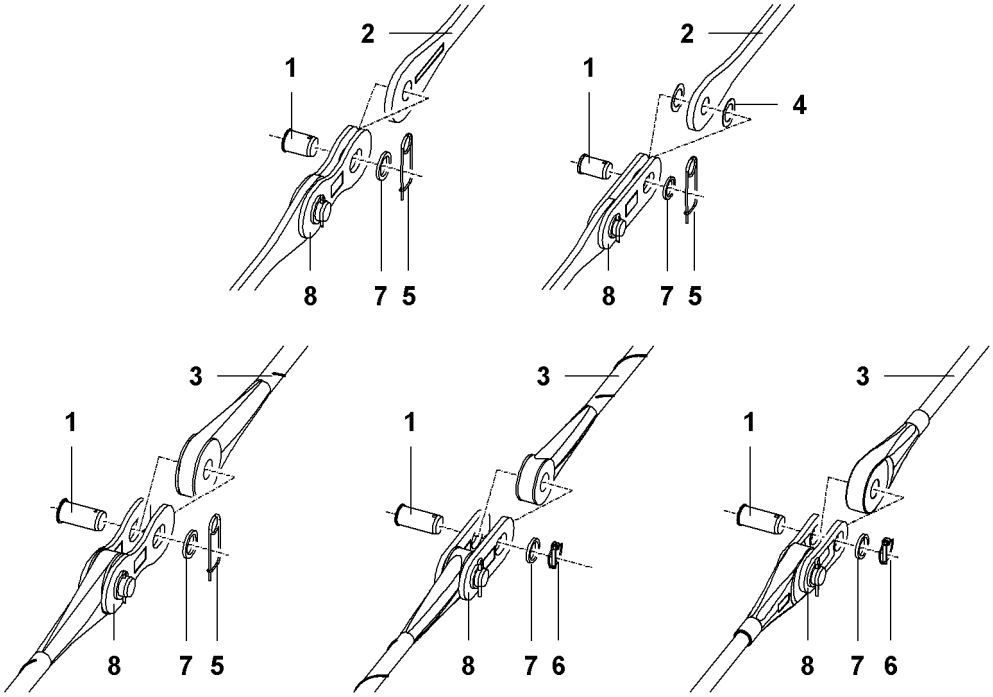

Fig. 3554: Bolt the pendant straps (schematic diagram of various pendant straps)

1	Pin	**5**	Safety pin
2	Steel pendant strap	**6**	Linch pin
3	Carbon-fibre pendant strap	**7**	Washer
4	Plastic washer (2x)	**8**	Connecting link

▶ Remove the pin **1** on the connecting link **8**.

▶ Position the pendant strap **2, 3** between the two coupling links **8**.
or

If the pendant strap has plastic washers **4**:
Position the pendant strap **2** with plastic washers **4** on both sides between the two connecting links **8**.

▶ Insert pin **1** and secure with washers **7** and safety pin **5** or linch pin **6**.

Removing the jib backstay straps

The jib backstay straps are transported on the boom sections. They can be removed if no jib is mounted.

Note
Higher load with deinstalled jib backstay straps!

▶ Refer to the foreword in the valid load capacity chart.

If the jib backstay straps are left on the main boom:

▶ Pin the jib backstay straps together and secure with washers and a safety pin.

▶ Pin the connecting links on the boom head section to the jib backstay straps and secure with washers and a safety pin.

▶ Pin the connecting links on the boom base section to the jib backstay straps and secure with washers and a safety pin.

▶ Secure the transport brackets for the jib backstay straps with safety pins.

LWN/LR.x/V03.01//Auslieferung/2015-06-03/en

copyright by
LIEBHERR

Installing mid-point suspension

The lengths of the stay ropes and their assembly positions are shown in the relevant instructions for the boom.

Note
Special procedure for installing the mid-point suspension for main boom 2821 with main boom length of 80 m (262‘ 6“ ft-in), 83 m (272‘ 4“ ft-in) or 86 m (282‘ 2“ ft-in) and installed jib 1507!

▶ Fit mid-point suspension as instructed.

DANGER
Incorrect installation of mid-point suspensions!
Structural breakdown.

▶ Fit mid-point suspensions according to relevant system instructions.

▶ Assemble required length of stay ropes in line with system-relevant details.

▶ Remove the safety pins and washers from both sides of the boom pin connection double-taper pin and stow away.

▶ Repeat procedure on opposite side.

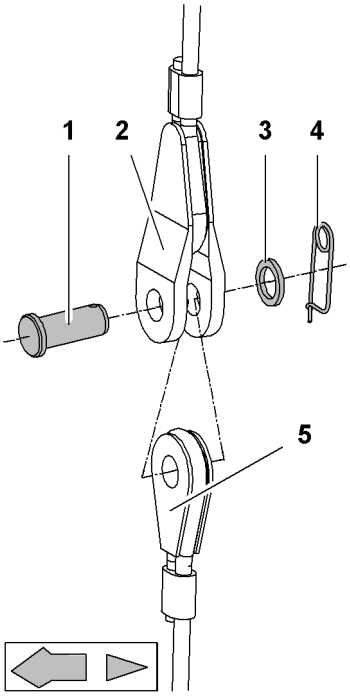

Fig. 3555: Pinning mid-point suspension stay ropes

1	Pin	**4**	Safety pin
2	Top stay rope	**5**	Bottom stay rope
3	Washer		

▶ Pin top stay rope **2** to bottom stay rope **5**.

▶ Secure the pin **1** with washer **3** and retaining spring **4**.

LWN/LR.x/V03.01//Auslieferung/2015-06-03/en

copyright by LIEBHERR

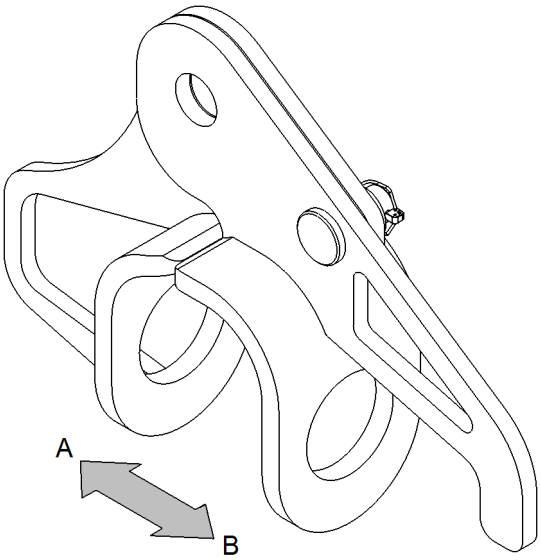

Fig. 3556: Mid-point suspension forks

A Main boom interior **B** Main boom exterior

The forks may have different shapes. The permissible shape depends on the boom configuration (For more information see: 1 Product description, page 49) .

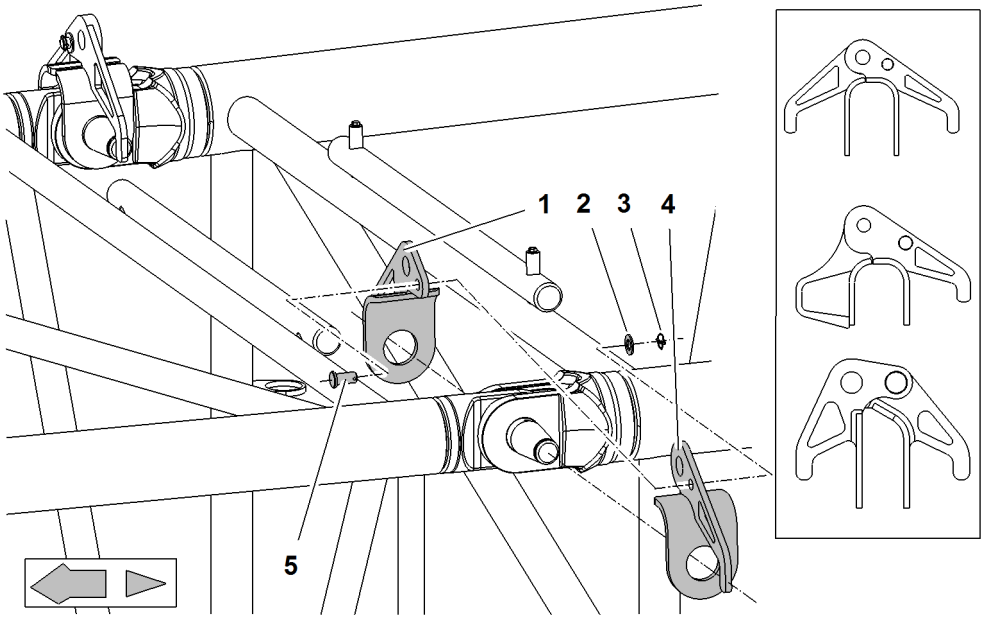

Fig. 3557: Assembling the mid-point suspension forks

1 Inner section of fork
2 Washer
3 Linch pin
4 Outer section of fork
5 Pin

Note
Special assembly procedure when the mid-point suspension and rope guide are installed in exactly the same position on the main boom!

▶ The rope guide forks replace the mid-point suspension forks.

▶ Mount inner section of fork **1** on double-taper pin.

LWN/LR.x/V03.01//Auslieferung/2015-06-03/en

- ▶ Mount outer section of fork **4** on double-taper pin.
- ▶ Pin inner section of fork **1** to outer section of fork **4**.
- ▶ Secure pin **5** with a washer **2** and linch pin **3**.
- ▶ Repeat procedure on opposite side.

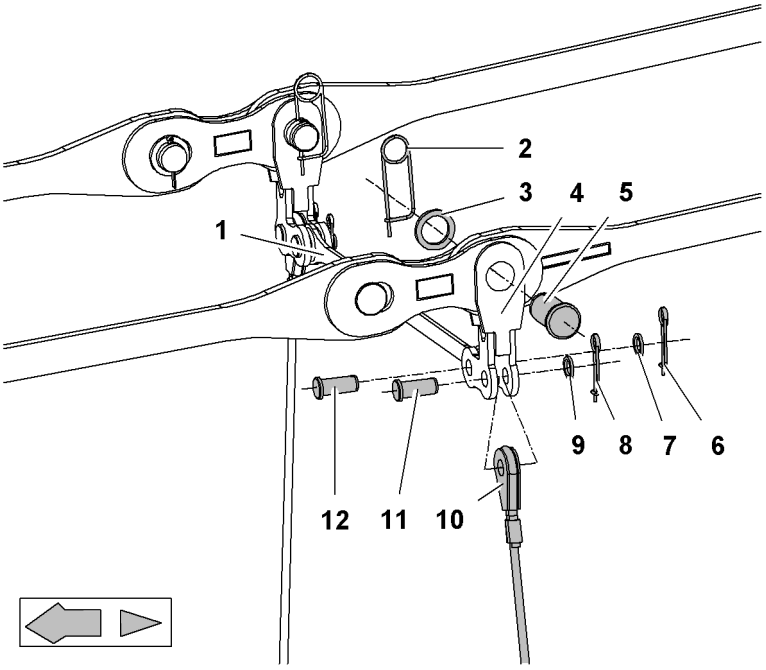

Fig. 3558: Installing the pendant straps, spacer bracket, connecting elements and mid-point suspension stay ropes

1	Spacer bracket	**7**	Washer
2	Safety pin	**8**	Safety pin
3	Washer	**9**	Washer
4	Connecting element	**10**	Stay rope
5	Pins for pendant strap	**11**	Pin for stay rope
6	Safety pin	**12**	Pin for spacer bracket

- ▶ Pin connecting element **4** to pendant strap.
- ▶ Secure the pin **5** with washer **3** and retaining spring **2**.
- ▶ Pin connecting element **4** to spacer bracket **1**.
- ▶ Secure the pin **12** with washer **7** and retaining spring **6**.
- ▶ Pin connecting element **4** to stay rope **10**.
- ▶ Secure the pin **11** with washer **9** and retaining spring **8**.
- ▶ Repeat procedure on opposite side.

LWN/LR.x/V03.01//Auslieferung/2015-06-03/en

copyright by
LIEBHERR

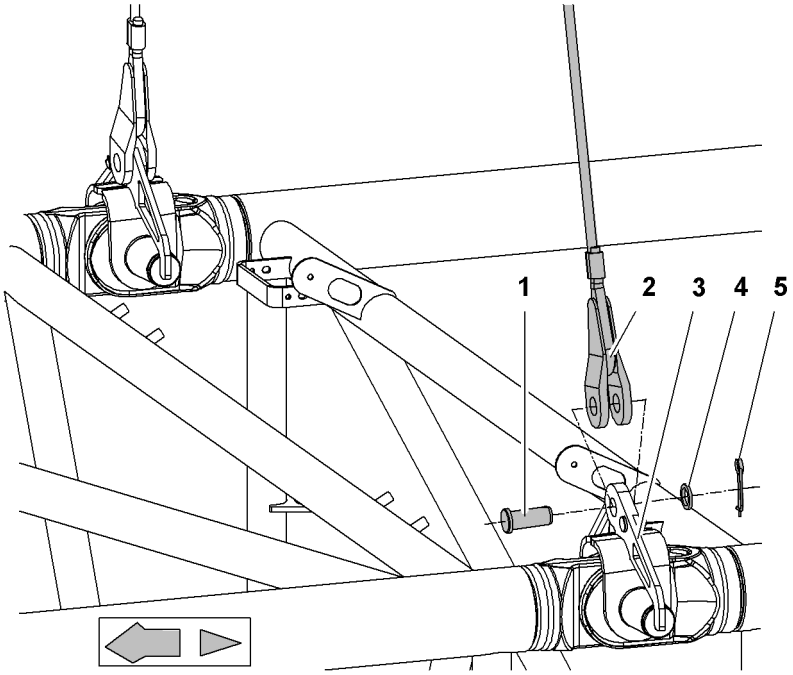

Fig. 3559: Pinning stay ropes to forks of mid-point suspension

1	Pin	**4**	Washer
2	Stay rope	**5**	Safety pin
3	Fork		

▶ Pin stay rope **2** to fork **3**.

▶ Secure the pin **1** with washer **4** and retaining spring **5**.

▶ Repeat procedure on opposite side.

Installing mid-point suspension (with main boom length 80 m (262 ft), 83 m (272 ft) and 86 m (282 ft) and jib 1507 attached)

With a main boom length of 80 m (262 ft), 83 m (272 ft) and 86 m (282 ft) and 1507 fixed jib attached, installation of the mid-point suspension represents a special case.

DANGER
Incorrect installation of mid-point suspensions!
Structural failure.

▶ Fit mid-point suspensions according to relevant system instructions.

LWN/LR.x/V03.01//Auslieferung/2015-06-03/en

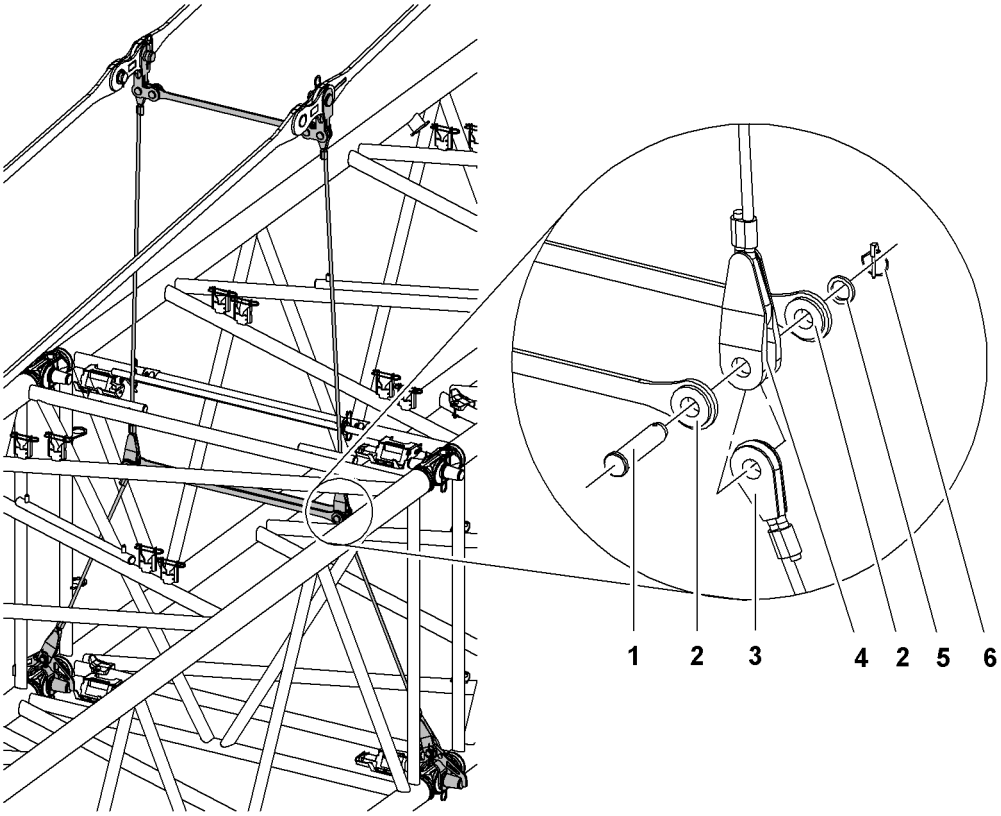

Fig. 3560: Pinning stay ropes to spacer brackets

1	Pin for spacer bracket	**4**	Top stay rope
2	Spacer bracket (2x)	**5**	Washer
3	Bottom stay rope	**6**	Linch pin

- ▶ Pin mid-point suspensions to pendant straps (For more information see: 7.6.10 Installing mid-point suspension, page 1259) (For more information see: Installing mid-point suspension, page 1367) .
- ▶ Pin top stay rope **4** and bottom stay rope **3** to spacer bracket **2**.
- ▶ Secure pin **1** with a washer **5** and linch pin **6**.
- ▶ Repeat procedure on opposite side.
- ▶ Pin mid-point suspension with boom section (For more information see: 7.6.10 Installing mid-point suspension, page 1259) (For more information see: Installing mid-point suspension, page 1367) .

Connect the electric cables

NOTICE
Electric cables have been handled incorrectly!
Damage to electric cable and plug.

- ▶ Do not pull the electric cable over sharp-edged objects.
- ▶ Do not crush or kink the electric cable.
- ▶ Keep the plug clean.

- ▶ Disconnect both electric cables from the terminal box on the boom base section.

LWN/LR.x/V03.01//Auslieferung/2015-06-03/en

copyright by
LIEBHERR

NOTICE
Electric cable has been unwound incorrectly!
Electric cable may be damaged.

▶ Push the electric cable in the cable drum into the side opening of the cable drum.

▶ Loosen the pin on the axle of the cable drum.

▶ Unwind the electric cable from the cable drum and pull it inside the main boom to the boom head section.

▶ Connect the electric cable to the terminal box on the boom head section and secure using retaining clips.

Two fixing holes are provided under the terminal box to relieve the strain on the plug.

▶ Clip both carabiners on the cable sock into the fixing holes.

▶ Fix the pin on the axle of the cable drum.

▶ Reconnect the electric cable in the cable drum to the terminal box on the boom base section.
  ▷ The boom base section and boom head section electric cables are connected.

If an auxiliary jib is fitted:
▶ Plug the auxiliary jib electric cable into the boom head section.

Installing the obstacle warning light

Note
Use of the obstacle warning light is prescribed by national or regional regulations!

▶ Before using the machine, familiarise yourself with national and local regulations.

Ensure that the following conditions are fulfilled:
❑ Anemometer is not installed.

LWN/LR.x/V03.01//Auslieferung/2015-06-03/en

copyright by
LIEBHERR

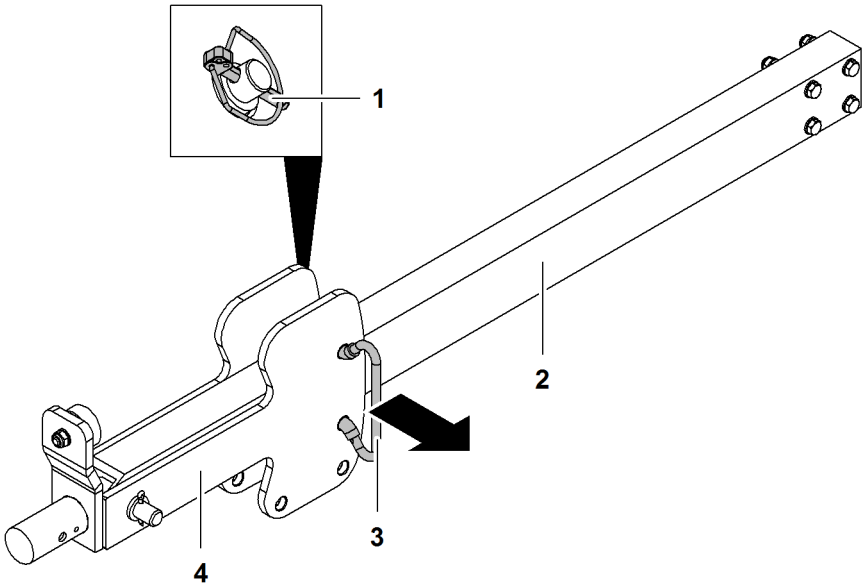

Fig. 3561: Moving the pendulum into the working position

1	Linchpins (2x)	**3**	Locking element
2	Mount	**4**	Pendulum

The pendulum **4** is secured on the mount **2** for machine transport.

- ▶ Remove the linchpin **1** of the locking element **3**.
- ▶ Remove **3** locking element.
- ▶ Swing pendulum **4** down.
- ▶ Slide locking element **3** through pendulum **4** and secure with linchpins **1**.

LWN/LR.x/V03.01//Auslieferung/2015-06-03/en

copyright by
LIEBHERR

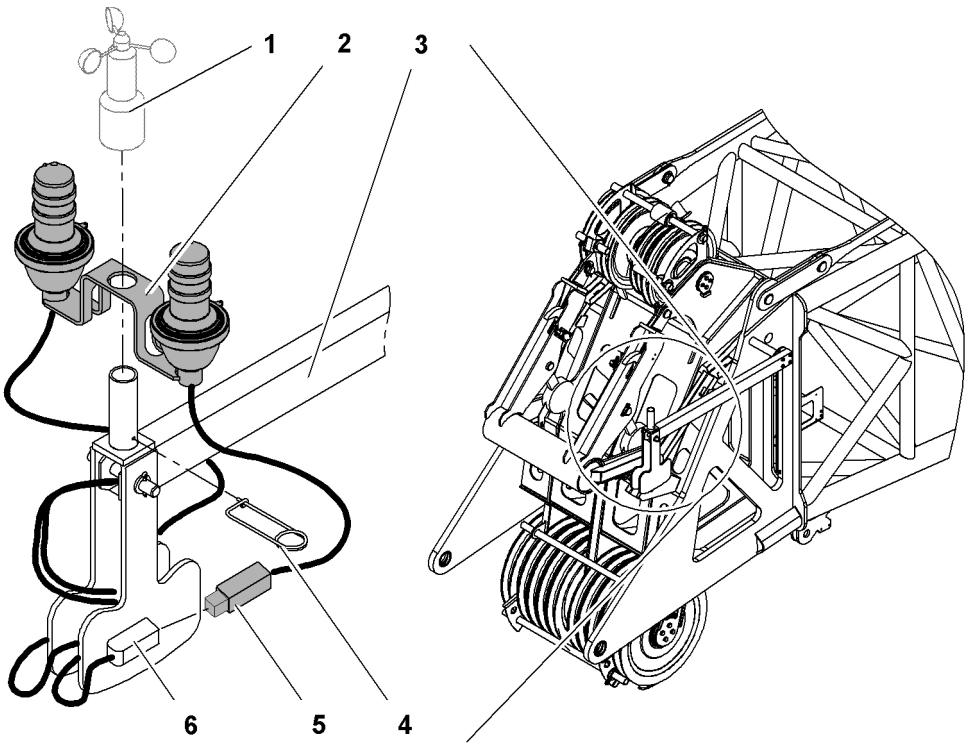

Fig. 3562: Installing the obstacle warning light

1	Anemometer	**4**	Safety pin
2	Obstacle warning light	**5**	Plug
3	Mount	**6**	Coupling

▶ Place obstacle warning light **2** on pipe.
  ▷ Obstacle warning light is secured by the pipe and axis on the bracket **3**.

NOTICE
Safety pin is not fit properly!
Damage to the electric cable.

▶ Insert the safety pin carefully.

▶ Insert the safety pin **4**.
  ▷ Obstacle warning light **2** is secured.

▶ Connect the plug **5** to the coupling **6**.

▶ Lock plug **5**.

Fitting the anemometer

Ensure that the following conditions are fulfilled:

❑ Obstacle warning light is installed (if available).

LWN/LR.x/V03.01//Auslieferung/2015-06-03/en

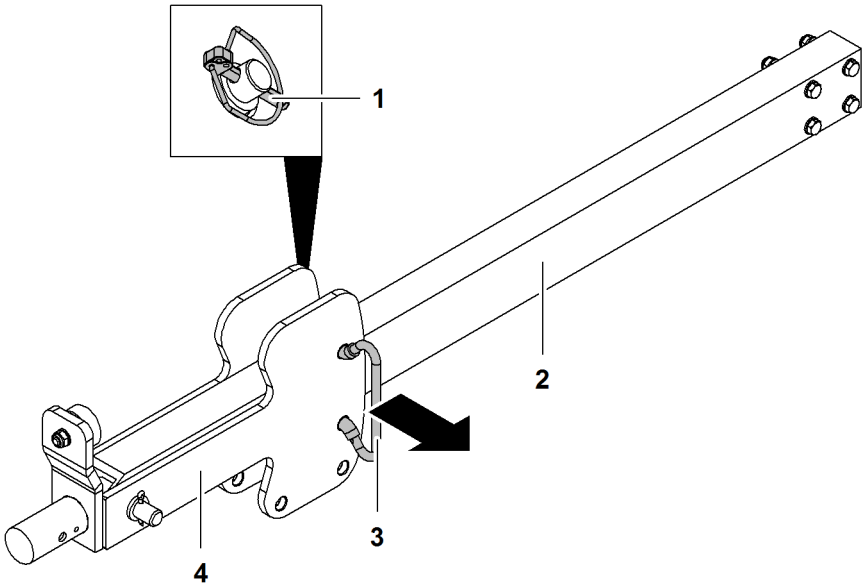

Fig. 3563: Moving the pendulum into the working position

1	Linchpins (2x)	**3**	Locking element
2	Mount	**4**	Pendulum

The pendulum **4** is secured on the mount **2** for machine transport.

- ▶ Remove the linchpin **1** of the locking element **3**.
- ▶ Remove **3** locking element.
- ▶ Swing pendulum **4** down.
- ▶ Slide locking element **3** through pendulum **4** and secure with linchpins **1**.

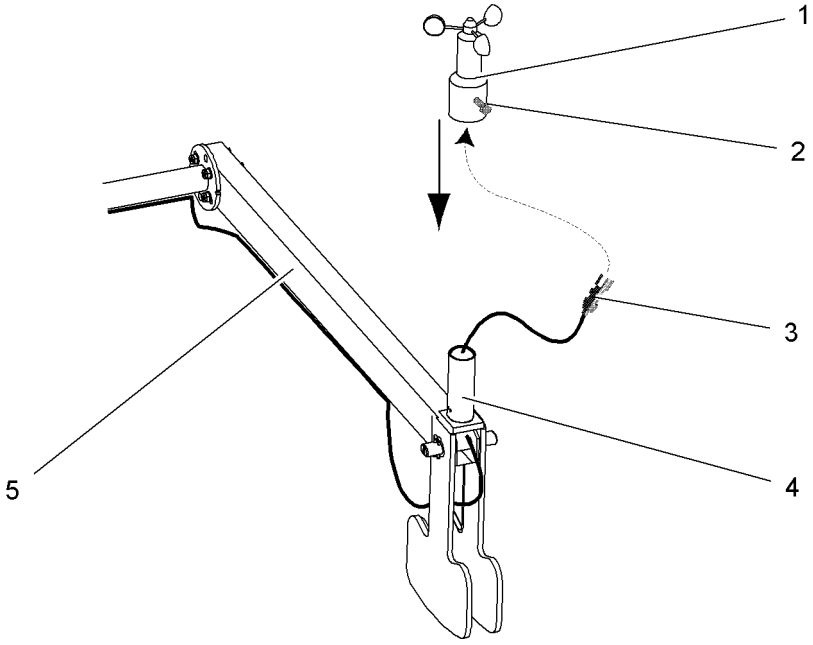

Fig. 3564: Fitting the anemometer

1	Anemometer	**4**	Tube
2	Screw	**5**	Mount
3	Plug		

LWN/LR.x/V03.01//Auslieferung/2015-06-03/en

copyright by
LIEBHERR

- Remove cover from the plug **3**.
- Plug in the connector **3** at the bottom of the anemometer **1**.
- Secure plug **3** with nut.

NOTICE
Anemometer is not fit properly!
Damage to the electric cable.

- Pull the extended electric cable through the tube before pushing on the anemometer.

- Position the anemometer **1** on the tube **4**.
- Securing the anemometer on the mount: Tighten the screw **2**.

The rotor of the anemometer must be free to rotate slightly.

- Test the anemometer: rotate the rotor slightly and note the value on the monitor.
  ▷ The wind speed value will increase.

Moving the lightning rods* into working position

Installation of lightning rods* on main boom head with derrick boom head

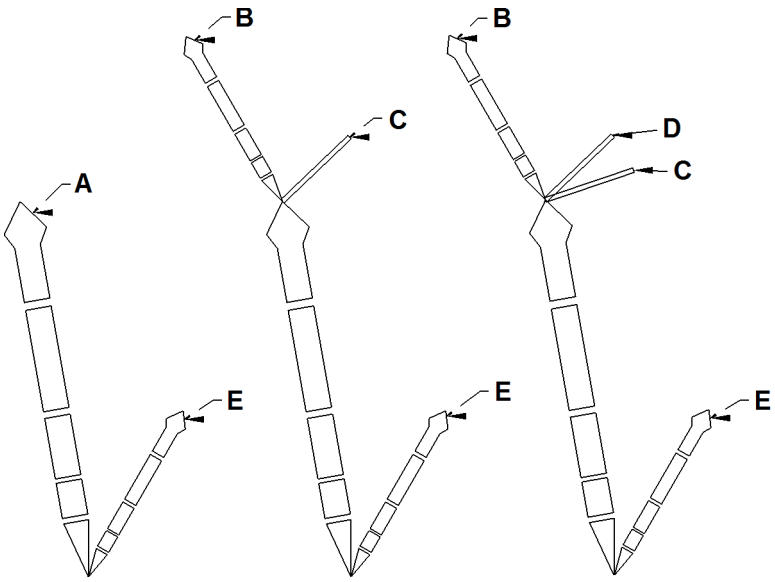

Fig. 3565: Installation of lightning rods on main boom head with derrick boom head*

A Main boom head
B Jib head
C A-frame2
D A-frame3
E Derrick boom head

Boom configuration	Number of lightning rods	Installation positions
Main boom + derrick	2	A + E
Main boom + fixed jib + derrick	3	B + C + E

LWN/LR.x/V03.01//Auslieferung/2015-06-03/en

Boom configuration	Number of lightning rods	Installation positions
Main boom + luffing jib + derrick	4	B + C + D + E

Tab. 487: Installation and number of lightning rods on main boom head with derrick boom head*

Moving the lightning rods* on the main boom head into working position

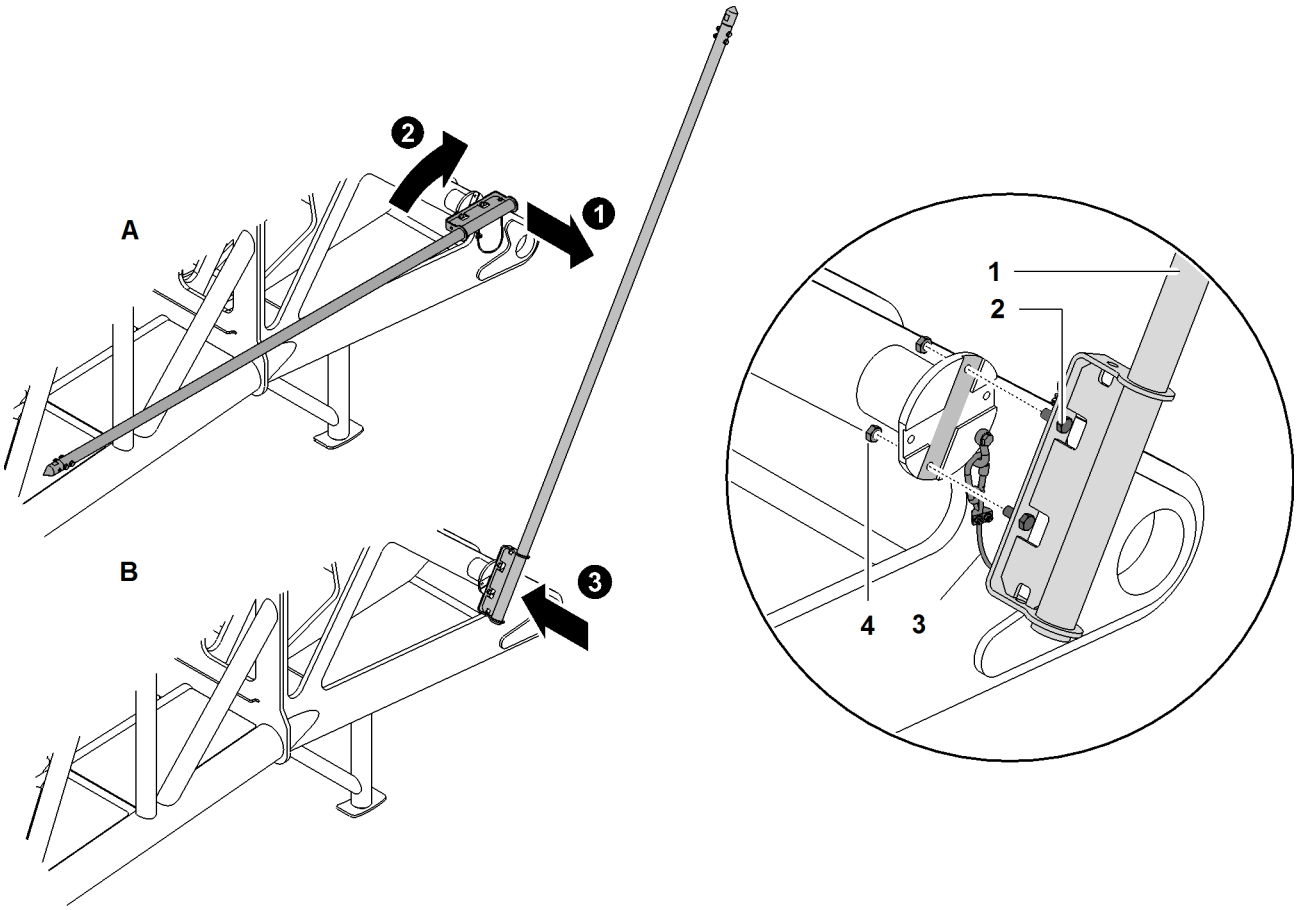

Fig. 3566: Moving the lightning rods on the main boom head into working position (illustration of principle)*

A	Transport position	**1**	Lightning rod	**3**	Safety rope
B	Working position	**2**	Screw (2x)	**4**	Nut (2x)

- ▶ Undo safety rope **3**.
- ▶ Undo nuts **4**.
- ▶ Undo screws **2**.
- ▶ Move lightning rod **1** from transport position **A** to working position **B**.

Note
Liebherr recommends:

- ▶ Grease threads of the screws **2**.

- ▶ Attach lighting rod **1** withscrews **2**.

LWN/LR.x/V03.01//Auslieferung/2015-06-03/en

copyright by LIEBHERR

▶ Lock screws **2** with nuts **4**.

NOTICE
Safety rope not attached!
Dropping parts.

▶ Ensure that safety rope **3** is attached.

▶ Attach safety rope **3**.

NOTICE
Tip not installed!
Improperly deflected current.
Dropping parts.

▶ Ensure that the tip on the lightning rod **1** is installed.

▶ Ensure that the screws of the tip are tightened.

▶ Ensure that the tip on the lightning rod **1** is installed.

▶ Ensure that the screws of the tip are tightened.

LWN/LR.x/V03.01//Auslieferung/2015-06-03/en

copyright by
LIEBHERR

Moving the lightning rods* on A-frame2 into working position

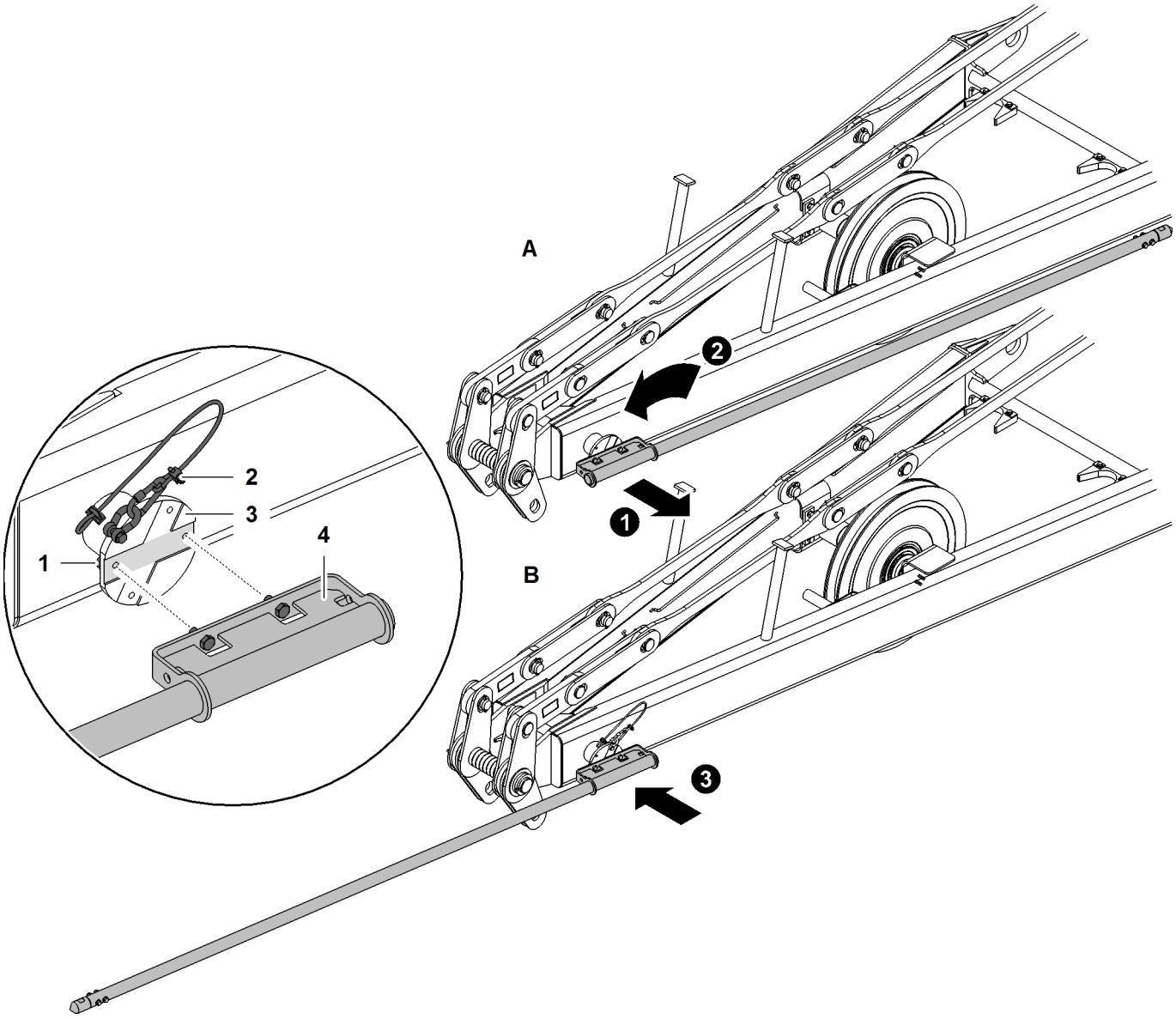

Fig. 3567: Moving the lightning rods on A-frame2 into working position (illustration of principle)*

A	Transport position	**1**	Nut (2x)	**3**	Screw (2x)
B	Working position	**2**	Safety rope	**4**	Lightning rod

- ▶ Undo safety rope **2**.
- ▶ Undo nuts **1**.
- ▶ Undo screws **3**.
- ▶ Move lightning rod **4** from transport position **A** to working position **B**.

Note
Liebherr recommends:

- ▶ Grease threads of the screws **3**.

- ▶ Attach lighting rod **4** withscrews **3**.
- ▶ Lock screws **3** with nuts **1**.

LWN/LR.x/V03.01//Auslieferung/2015-06-03/en

copyright by LIEBHERR

NOTICE
Safety rope not attached!
Dropping parts.

▶ Ensure that safety rope **2** is attached.

▶ Attach safety rope **2**.

NOTICE
Tip not installed!
Improperly deflected current.
Dropping parts.

▶ Ensure that the tip on the lightning rod **4** is installed.

▶ Ensure that the screws of the tip are tightened.

▶ Ensure that the tip on the lightning rod **4** is installed.

▶ Ensure that the screws of the tip are tightened.

Moving the lightning rods* on A-frame2 and A-frame3 into working position

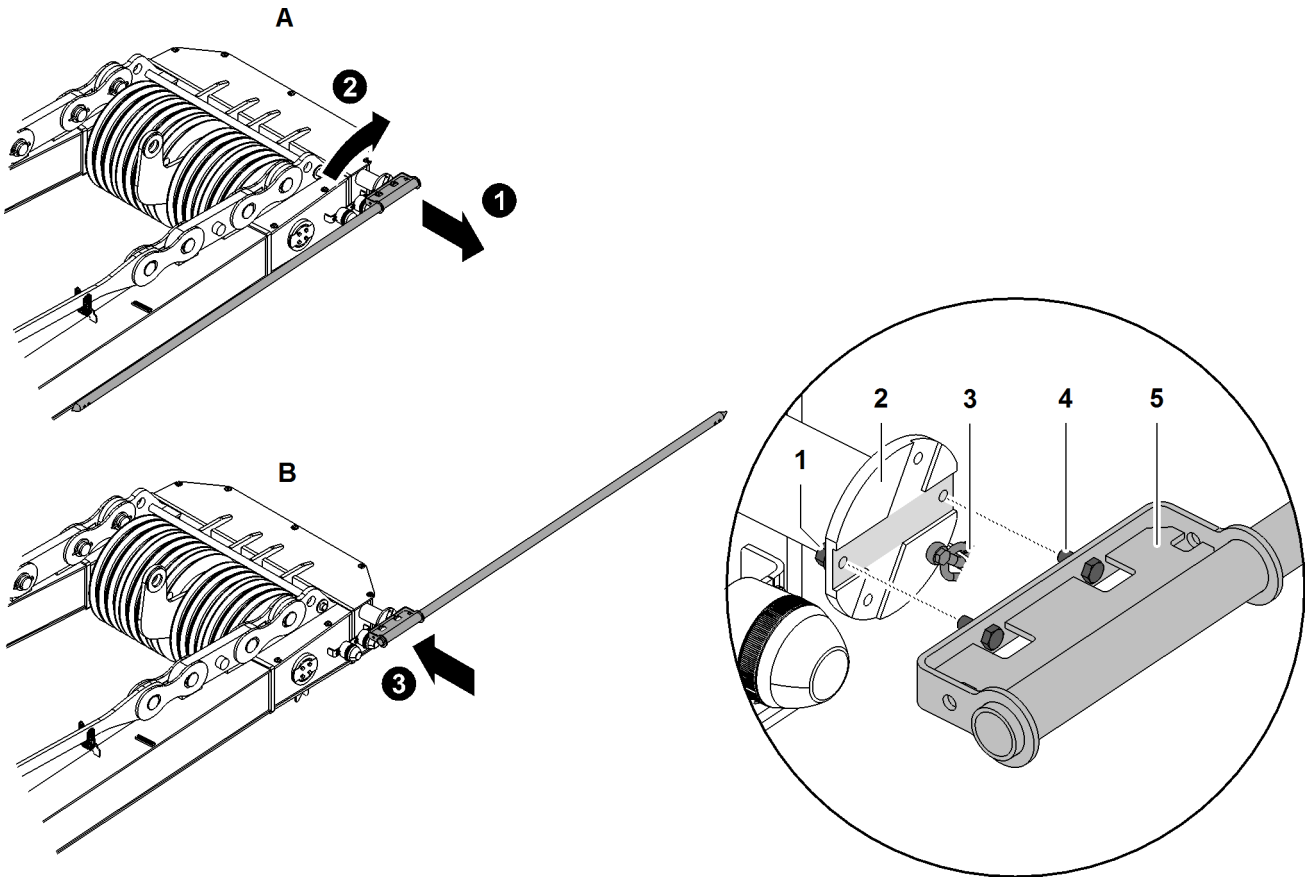

Fig. 3568: Moving the lightning rods on A-frame2 and A-frame3 into working position (illustration of principle)*

A	Transport position	**2**	Mounting plate	**5**	Lightning rod
B	Working position	**3**	Safety rope		
1	Nut (2x)	**4**	Screw (2x)		

▶ Undo safety rope **3**.

LWN/LR.x/V03.01//Auslieferung/2015-06-03/en

copyright by
LIEBHERR

- ▶ Undo nuts **1**.
- ▶ Undo screws **4**.
- ▶ Move lightning rod **5** from transport position **A** to working position **B**.

Note
Liebherr recommends:

- ▶ Grease threads of the screws **4**.

- ▶ Attach lighting rod **5** withscrews **4**.
- ▶ Lock screws **4** with nuts **1**.

NOTICE
Safety rope not attached!
Dropping parts.

- ▶ Ensure that safety rope **3** is attached.

- ▶ Attach safety rope **3**.

NOTICE
Tip not installed!
Improperly deflected current.
Dropping parts.

- ▶ Ensure that the tip on the lightning rod **5** is installed.
- ▶ Ensure that the screws of the tip are tightened.

- ▶ Ensure that the tip on the lightning rod **5** is installed.
- ▶ Ensure that the screws of the tip are tightened.

LWN/LR.x/V03.01//Auslieferung/2015-06-03/en

copyright by
LIEBHERR

Moving the lightning rods* on the fixed jib head into working position

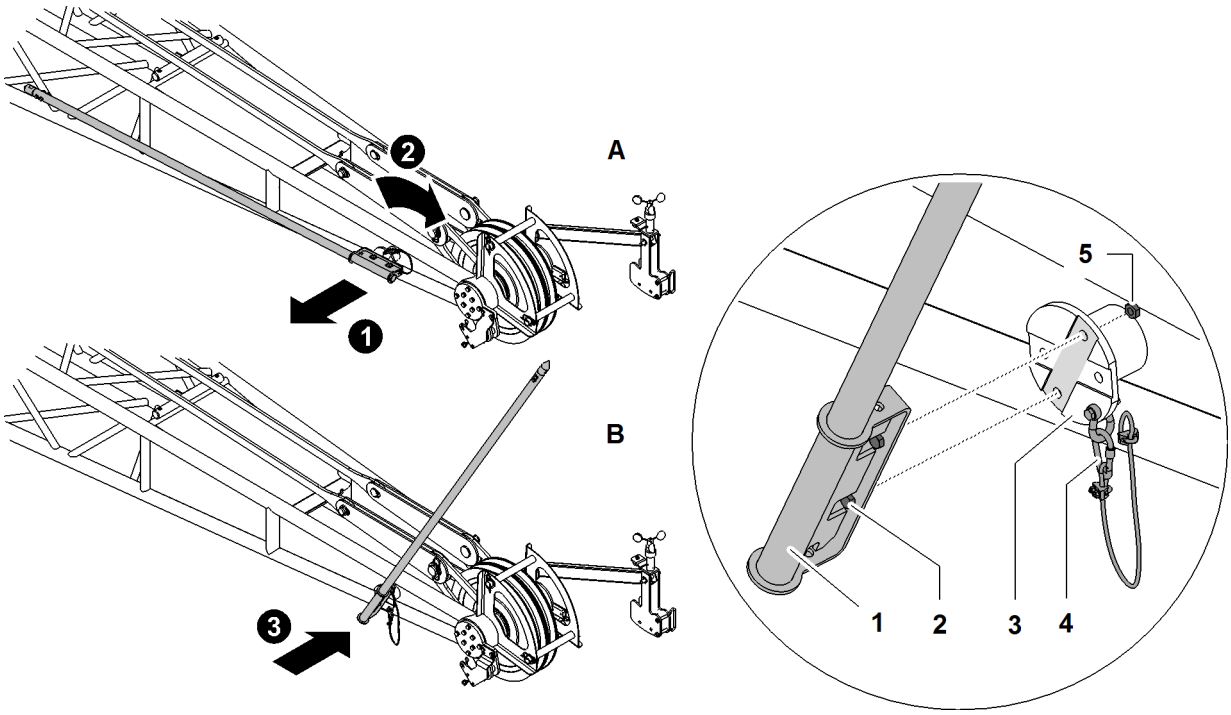

Fig. 3569: Moving the lightning rods on the fixed jib head into working position (illustration of principle)*

A	Transport position	**2**	Screw (2x)	**5**	Nut (2x)
B	Working position	**3**	Mounting plate		
1	Lightning rod	**4**	Safety rope		

- ▶ Undo safety rope **4**.
- ▶ Undo nuts **5**.
- ▶ Undo screws **2**.
- ▶ Move lightning rod **1** from transport position **A** to working position **B**.

Note
Liebherr recommends:

- ▶ Grease threads of the screws **2**.

- ▶ Attach lighting rod **1** withscrews **2**.
- ▶ Lock screws **2** with nuts **5**.

NOTICE
Safety rope not attached!
Dropping parts.

- ▶ Ensure that safety rope **4** is attached.

- ▶ Attach safety rope **4**.

LWN/LR.x/V03.01//Auslieferung/2015-06-03/en

NOTICE
Tip not installed!
Improperly deflected current.
Dropping parts.

- ▶ Ensure that the tip on the lightning rod **1** is installed.
- ▶ Ensure that the screws of the tip are tightened.

- ▶ Ensure that the tip on the lightning rod **1** is installed.
- ▶ Ensure that the screws of the tip are tightened.

Moving the lightning rods* on the luffing jib head into working position

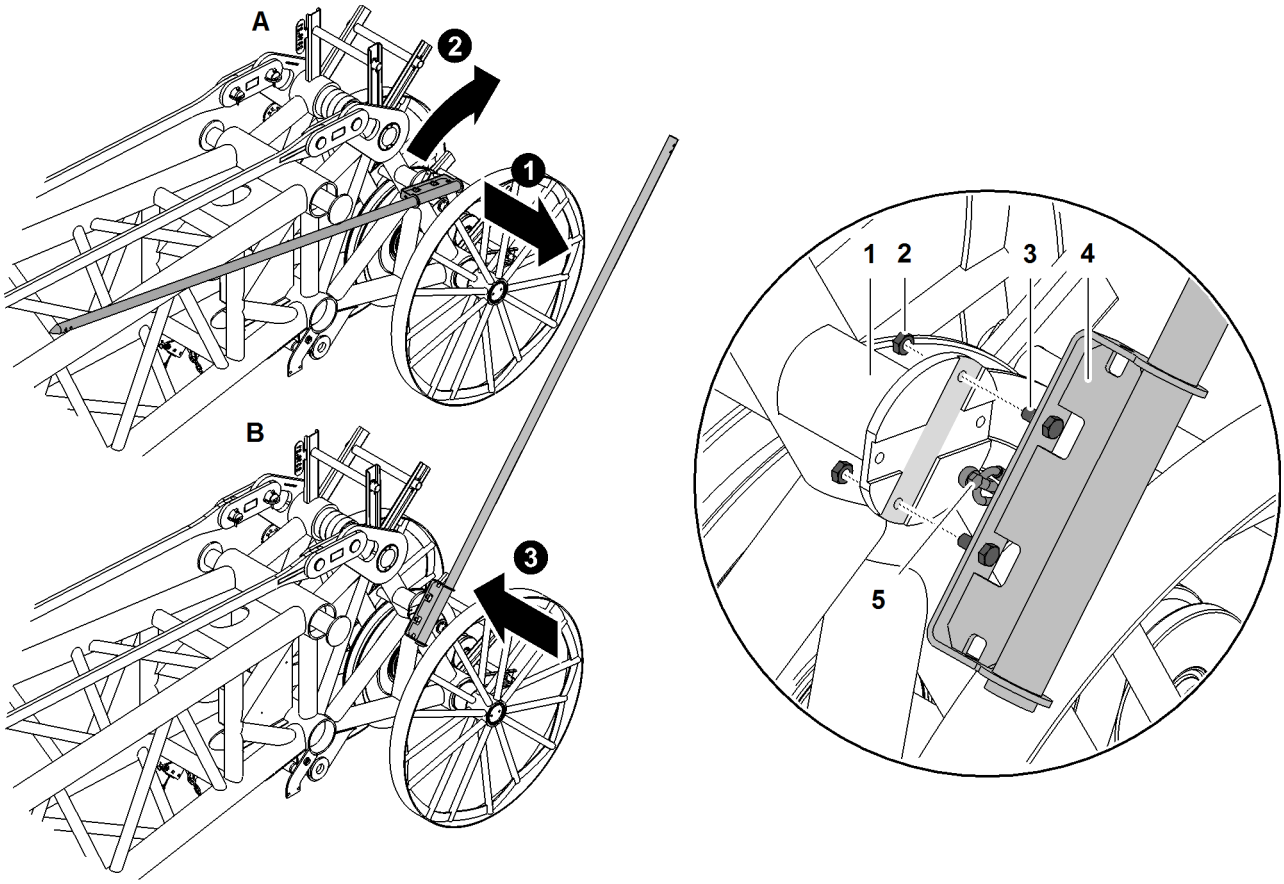

Fig. 3570: Moving the lightning rods on the luffing jib head into working position (illustration of principle)*

A	Transport position	**2**	Nut (2x)	**5**	Safety rope
B	Working position	**3**	Screw (2x)		
1	Mounting plate	**4**	Lightning rod		

- ▶ Undo safety rope **5**.
- ▶ Undo nuts **2**.
- ▶ Undo screws **3**.
- ▶ Move lightning rod **4** from transport position **A** to working position **B**.

LWN/LR.x/V03.01//Auslieferung/2015-06-03/en

copyright by
LIEBHERR

Note
Liebherr recommends:

▶ Grease threads of the screws **3**.

▶ Attach lighting rod **4** withscrews **3**.

▶ Lock screws **3** with nuts **2**.

NOTICE
Safety rope not attached!
Dropping parts.

▶ Ensure that safety rope **5** is attached.

▶ Attach safety rope **5**.

NOTICE
Tip not installed!
Improperly deflected current.
Dropping parts.

▶ Ensure that the tip on the lightning rod **4** is installed.

▶ Ensure that the screws of the tip are tightened.

▶ Ensure that the tip on the lightning rod **4** is installed.

▶ Ensure that the screws of the tip are tightened.

Rigging the main boom on derrick rope rigging

The main boom is lifted and then bolted with the help of the derrick boom and derrick pulley block.

Note

If the jib has been attached using the self-assembly system:

▶ Assemble the fixed jib and attach it to the main boom before installing the main boom base section.

▶ Assemble the luffing jib prior to installing the main boom base section and install jib base section on main boom.

Note

Liebherr recommends:

▶ Even if an assist crane is available, assembly of the main boom with the derrick boom is preferable.

Ensure that the following conditions are fulfilled:

❑ Main boom is fully assembled and ready.
❑ Basic machine is standing aligned precisely in front of the main boom.
❑ Sling gear with a load-bearing capacity of at least 16 t (35,273 lb) is available.

▶ Unwind the derrick winch.
  ▷ Derrick pulley block is lowered.

LWN/LR.x/V03.01//Auslieferung/2015-06-03/en

copyright by
LIEBHERR

DANGER
Wrong rigging points when rigging main boom!
Derrick boom tips backwards when it is mounted.

- ▶ Rig the main boom as illustrated to belt pipes of the main boom sections.
- ▶ Only lift main boom sections on both sides at the rigging points.

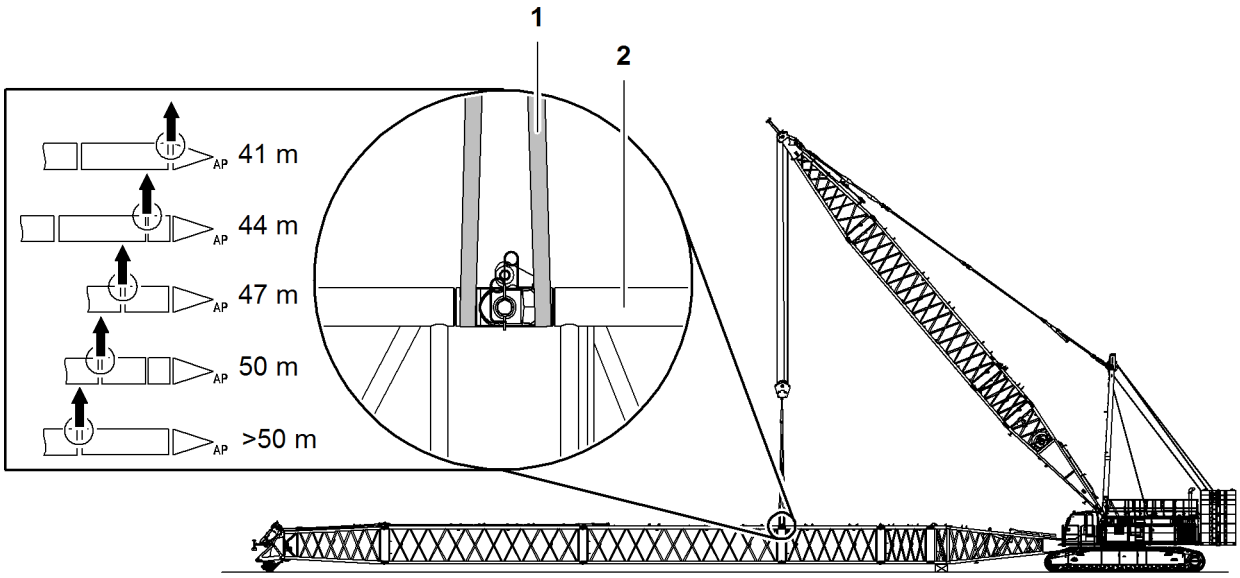

Fig. 3571: Rigging the main boom on derrick rope rigging

1 Sling gear

2 Top belt pipe of the main boom section

- ▶ Place sling gear **1** on both sides around top belt pipe **2** of main boom section.

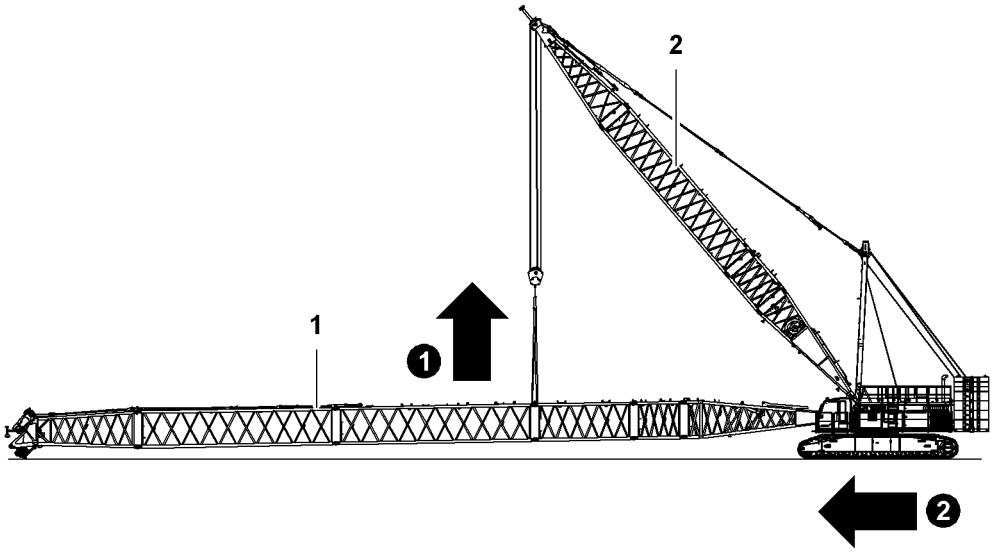

Fig. 3572: Lift main boom with derrick rope rigging

1 Main boom

2 Derrick boom

- ▶ Wind up the derrick winch.
  - ▷ Main boom **1** lifts.
- ▶ Move machine forward until main boom **1** is located in front of the uppercarriage pivot points.

LWN/LR.x/V03.01//Auslieferung/2015-06-03/en

copyright by LIEBHERR

Attaching the boom base section to the uppercarriage

WARNING
Machine swings with a suspended load!
Crush, fatal injury.

▶ Make sure that no-one is standing in the danger area.

▶ Leave the danger area.

Ensure that the following conditions are fulfilled:
❑ Cylinder adjustment functions are switched on.

▶ Open the front right uppercarriage door.

▶ Plug in the cable remote control on the uppercarriage.

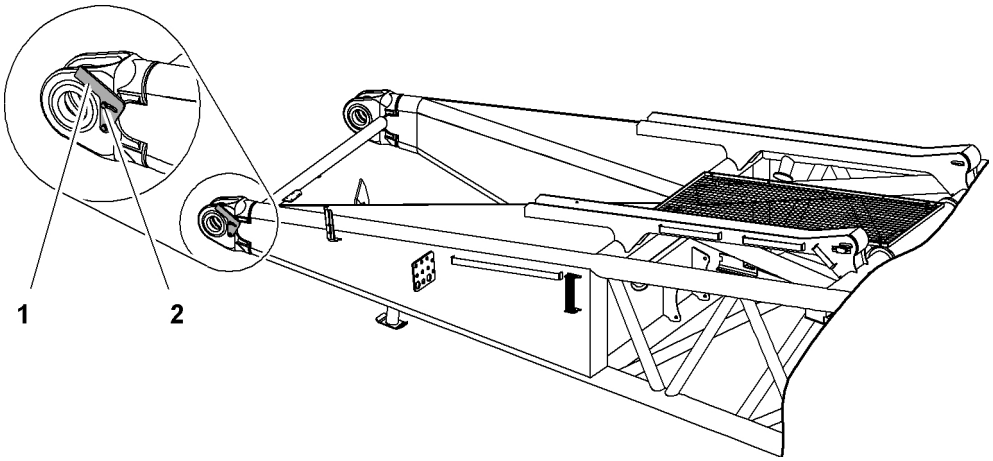

Fig. 3573: Fold up locking elements

1 Locking element (2x) **2** Screw (2x)

▶ Undo screws **2**.

▶ Fold up locking elements **1**.

LWN/LR.x/V03.01//Auslieferung/2015-06-03/en

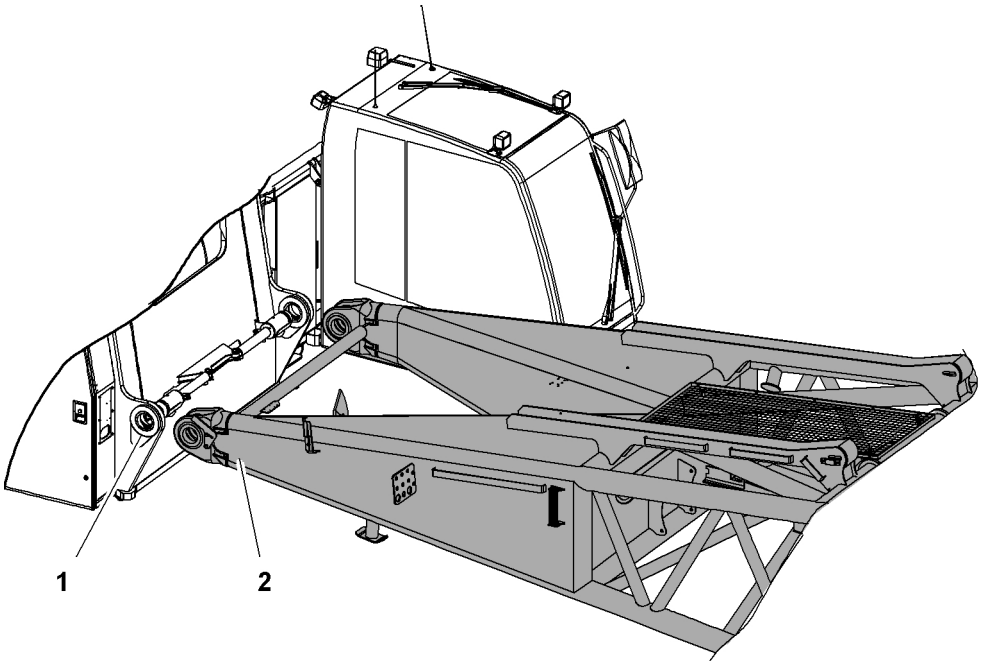

Fig. 3574: Positioning the main boom

1 Pivot point (2x) **2** Main boom

NOTICE
Main boom **2** swings!
Damage to cab.

▶ Ensure that an assistant guides the main boom **2** during installation.

▶ Align main boom **2** with pivot points **1** of uppercarriage.

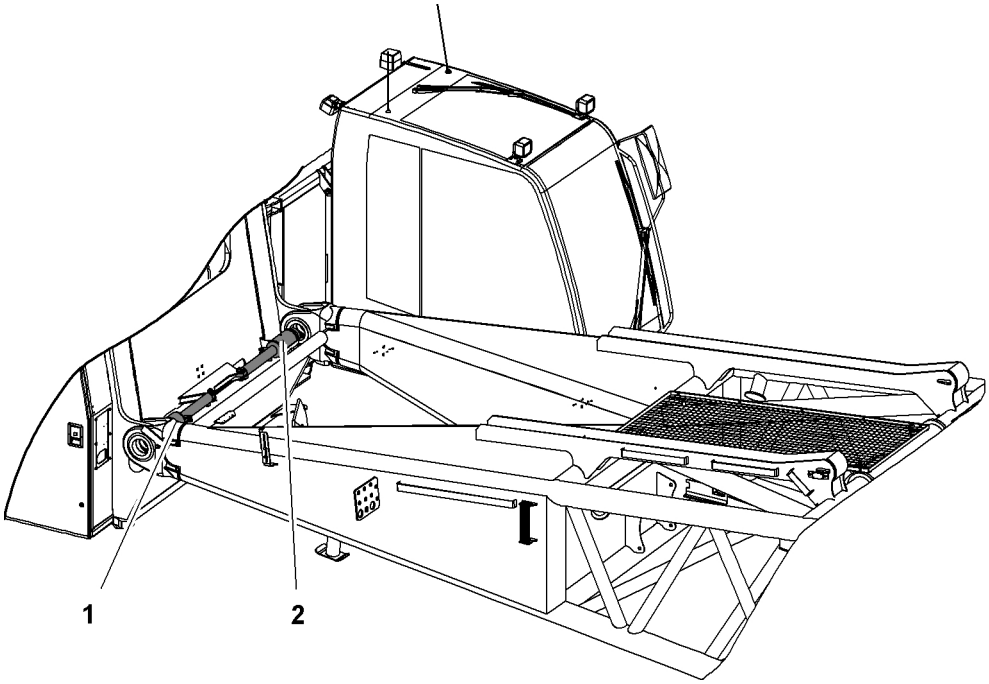

Fig. 3575: Extending the pin connection cylinder

1 Right-hand pin connection cylinder **2** Left-hand pin connection cylinder

LWN/LR.x/V03.01//Auslieferung/2015-06-03/en

copyright by
LIEBHERR

CAUTION
Moving parts!
Crushing.

▶ Keep all limbs well clear of moving parts.

NOTICE
Incorrect procedure during bolting!
Pin connection cylinder and pin connection points may be damaged.

▶ Only extend pin connection cylinder when pin connection points of main boom and uppercarriage are aligned.

If pin connection points of main boom are aligned with the pin connection points of the uppercarriage:

▶ Extend left pin connection cylinder **2** with cable remote control.

▶ Extend right pin connection cylinder **1** with cable remote control.

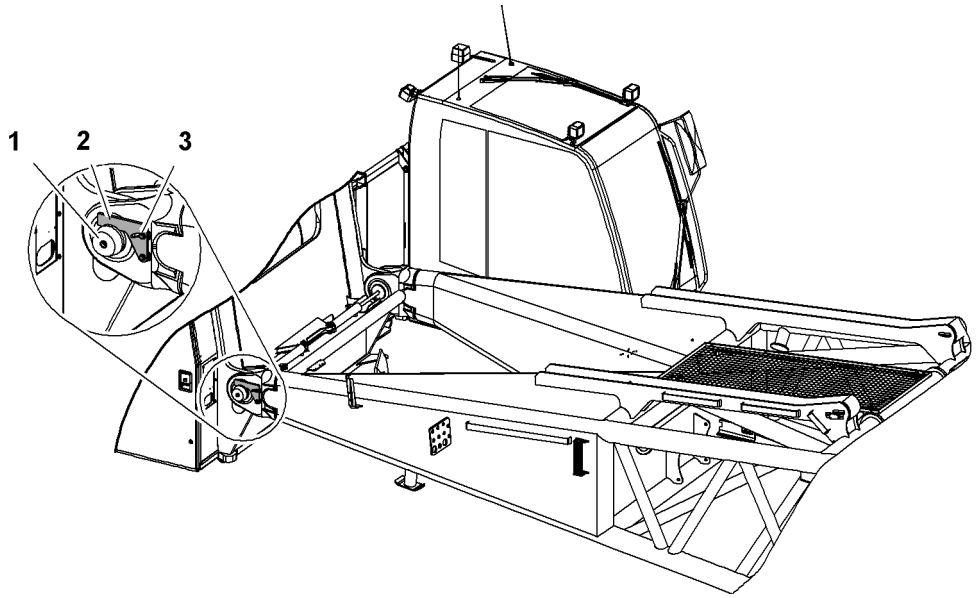

Fig. 3576: Secure pins with locking elements

1 Pin (2x)
2 Locking element (2x)
3 Screw (2x)

▶ Fold locking element **2** into pin **1** notch.

▶ Securing the locking elements **2**: tighten screws **3**.

▶ Detach sling gear.

▶ Remove sling gear from derrick rope rigging and stow away.

▶ Remove cable remote control on basic machine and stow it away.

▶ Close the front right uppercarriage door.

Connecting hydraulic lines to the uppercarriage

Ensure that the following conditions are fulfilled:

❑ Hand lever for the multi-coupling is available.
❑ Diesel engine is switched off.

LWN/LR.x/V03.01/Auslieferung/2015-06-03/en

copyright by
LIEBHERR

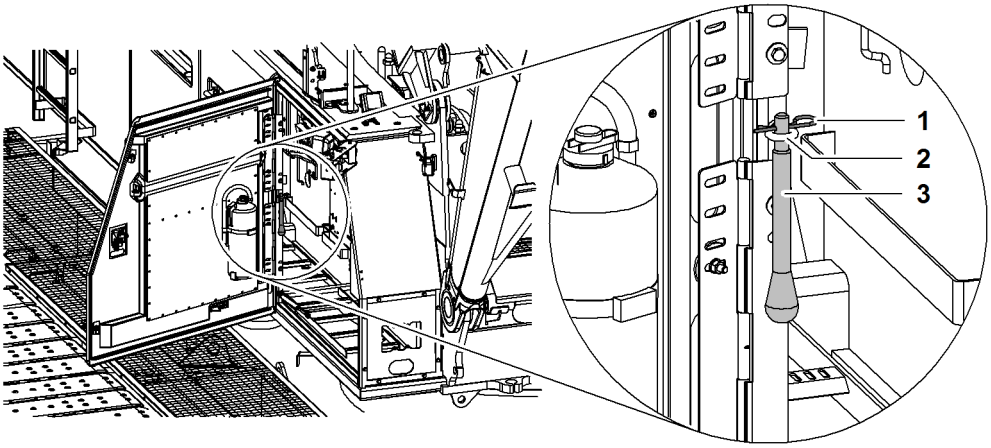

Fig. 3577: Transport mount for hand lever of multi-coupling

1 Locking spring
2 Ring
3 Hand lever

▶ Lift hand lever **3** and remove locking spring **1**.

▶ Remove hand lever **3** downwards from ring **2**.

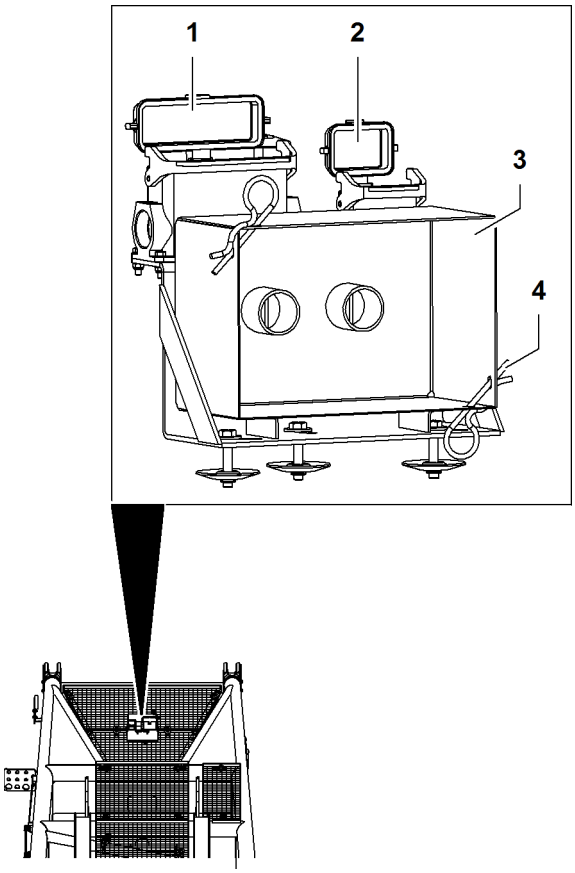

Fig. 3578: Transport position of the hydraulic pipes and electric cables on the main boom base section

1 Dummy socket for electrical system main boom base section
2 Dummy receptacle for electronics rope reeving winch
3 Cover of multi-coupling
4 Spring cotter pin

LWN/LR.x/V03.01//Auslieferung/2015-06-03/en

copyright by
LIEBHERR

A bracket for the cover **3** of the multi-coupling and dummy sockets for the electrical system are located on the catwalk of the main boom base section.

▶ Fit the hand lever of the multi-coupling.

▶ Remove spring cotter pin **4** on cover **3**.

▶ Turn hand lever in the direction of the arrow.
  ▷ Multi-coupling can be taken out of bracket.
  ▷ Cover **3** remains in bracket on main boom base section.

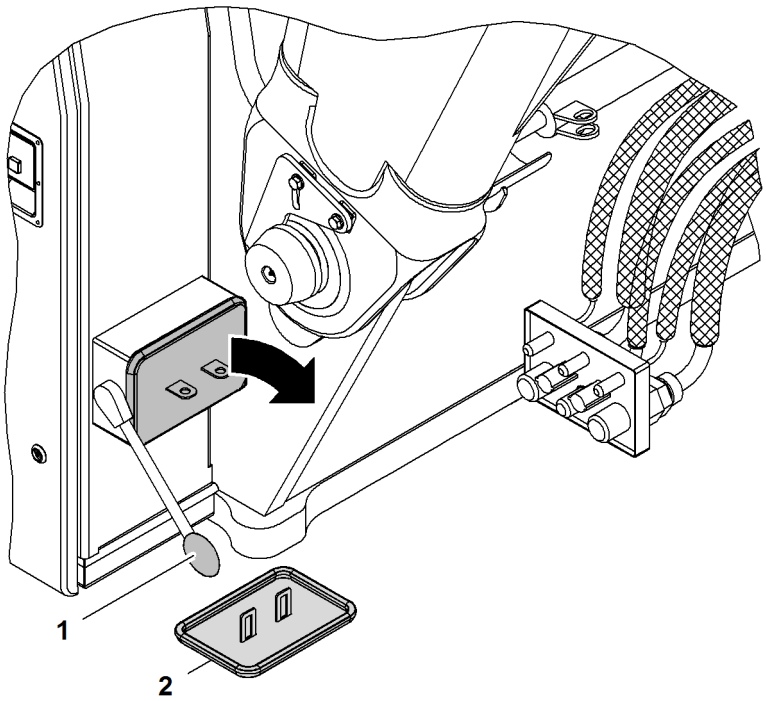

Fig. 3579: Removing the cover of the multi-couplings

1	Hand lever	**3**	Cover
2	Cover	**4**	Locking spring

▶ Fit the hand lever **1** of the multi-coupling.

▶ Remove the locking spring **4** on the cover **3**.

▶ Turn hand lever **1** in the direction of the arrow.
  ▷ Cover **2** is loose.

▶ Mount cover **3** on bracket of the main boom base section and secure with locking spring.

▶ Remove cover **2**.

LWN/LR.x/V03.01//Auslieferung/2015-06-03/en

copyright by
LIEBHERR

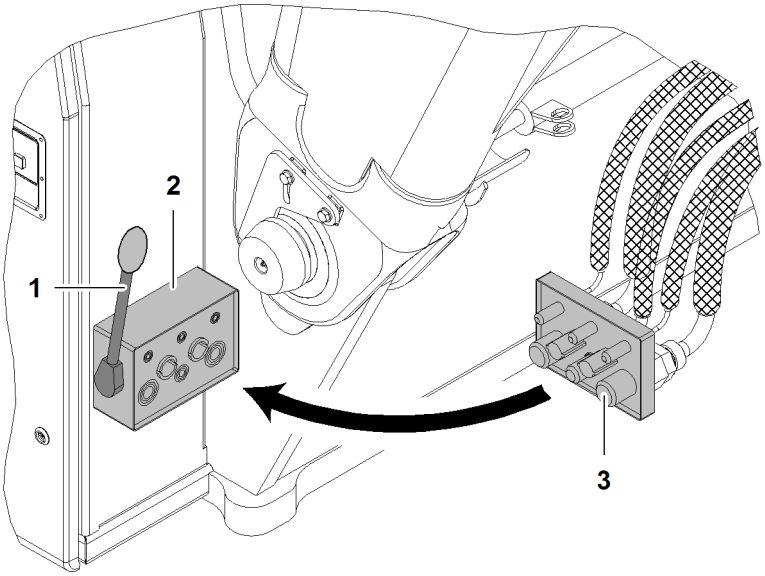

Fig. 3580: Connecting hydraulic lines to the uppercarriage

1 Hand lever

2 Multi-coupling (uppercarriage)

3 Multi-coupling (main boom base section)

NOTICE
Dirty multi-couplings!
Damage to the hydraulic system.

▶ Clean the multi-couplings before fitting them together.

▶ Connect the multi-couplings **2 + 3**.

▶ Move hand lever **1** until latch engages.
▷ The multi-couplings are visibly and audibly pulled together.
▷ The multi-coupling indicating pins stick out:

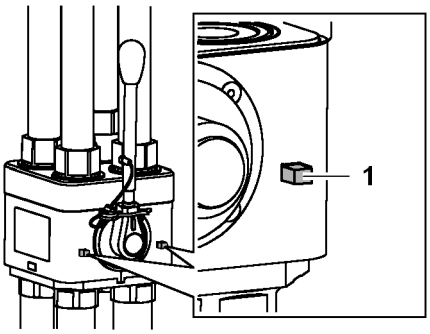

Fig. 3581: Locked multi-coupling

1 Indicating pin (2x)

▶ Disassemble the hand lever **1** on the multi-coupling.

LWN/LR.x/V03.01//Auslieferung/2015-06-03/en

copyright by
LIEBHERR

Connecting electric cables to the uppercarriage

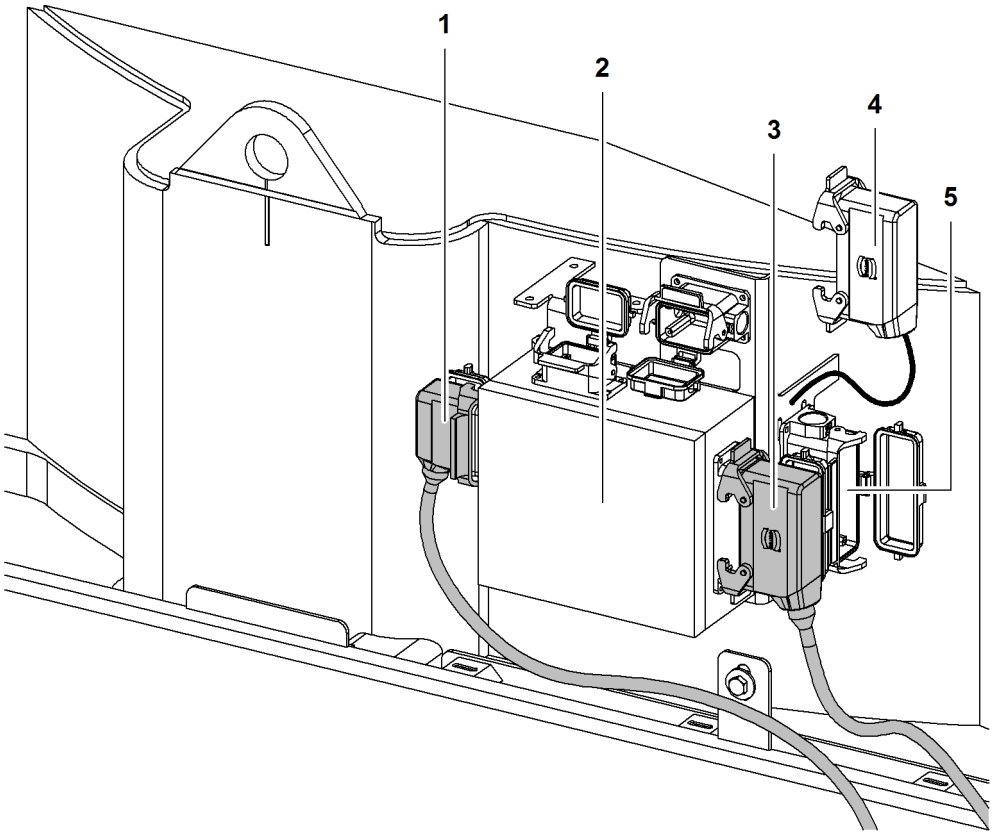

Fig. 3582: Connecting electric cables to the uppercarriage

1	Electric cables of the jib luffing winch and/or rope reeving winch	**4**	Bypass plug
2	Electric box	**5**	Dummy receptacle
3	Electric cables of the main boom base section		

- ▶ Open right front uppercarriage door.
- ▶ Plug the bypass plug **4** in the dummy receptacle **5** and secure it with the retaining clips.
- ▶ Guide the electric cables **3** of the main boom base section through the cable duct on uppercarriage.
- ▶ Plug electric line **3** into electric box **2** and lock with brackets.
- ▶ Guide the electric cables **1** of the jib luffing winch through the cable duct on uppercarriage.
- ▶ Plug electric line **1** into electric box **2** and lock with brackets.
- ▶ Close right front uppercarriage door.

LWN/LR.x/V03.01//Auslieferung/2015-06-03/en

copyright by
LIEBHERR

Bolt the derrick pulley block with main boom pendant straps

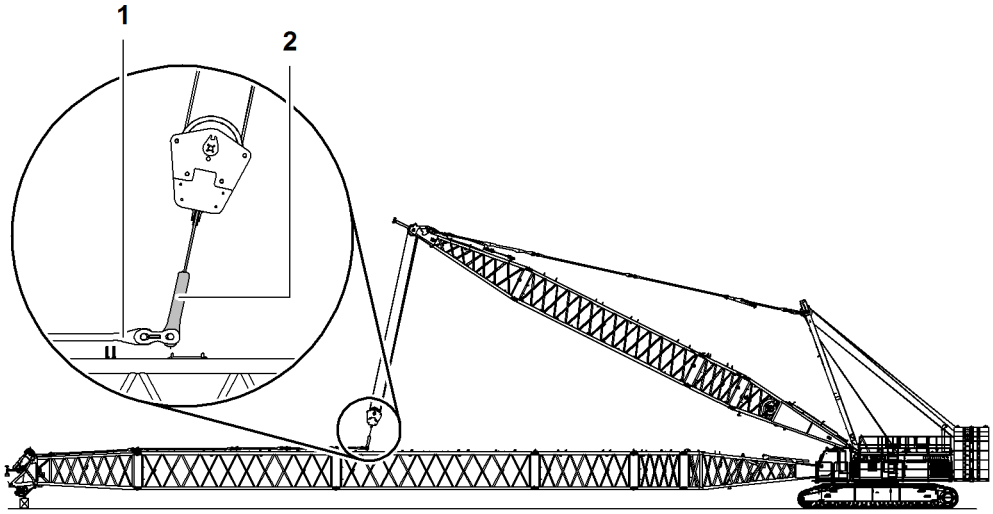

Fig. 3583: Pin derrick rope rigging with main boom pendant straps

1 Main boom pendant straps **2** Derrick rope rigging

▶ Unwind the boom winch.
▷ Derrick boom head is lowered.

▶ Unwind the derrick winch.
▷ Derrick rope rigging **2** lowers.

▶ Pin derrick rope rigging **2** with main boom pendant straps **1**.

▶ Secure pins with washers and locking spring.

Attaching the auxiliary jib (36 t (79300 lb)) to the boom head section

Make sure that the camera support (if available) on the main boom head section is detached.

LWN/LR.x/V03.01//Auslieferung/2015-06-03/en

copyright by
LIEBHERR

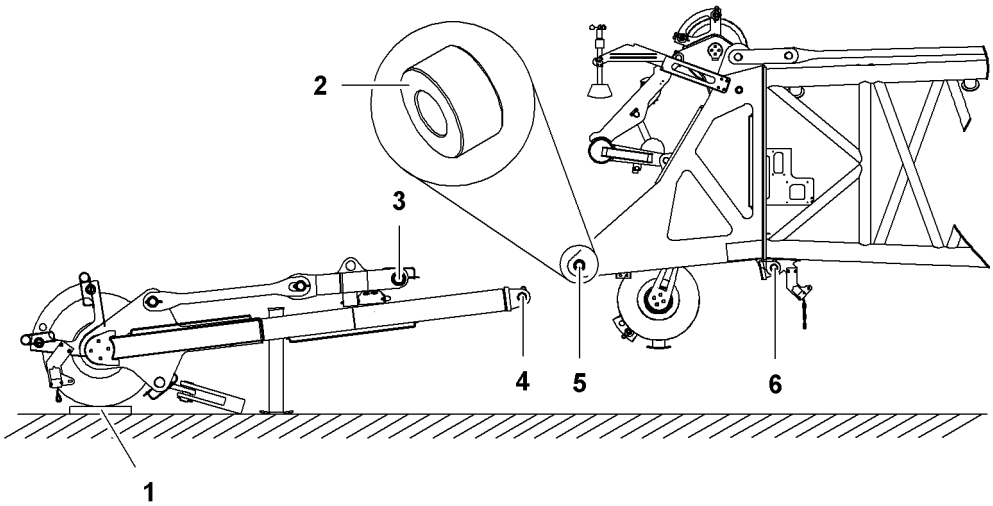

Fig. 3584: Positioning the auxiliary jib (36 t (79300 lb)) in front of the boom head section and inserting bushes

1	Wooden block	**4**	Lower pin connection point auxiliary jib (2x)
2	Bush (dia.80 mm (3.15“ in) x Ø40 mm (1.57“ in) x 43 mm (1.69“ in)) (2x)	**5**	Upper pin connection point main boom head (2x)
3	Upper pin connection point auxiliary jib (2x)	**6**	Lower pin connection point main boom head (2x)

▶ Position the auxiliary jib in front of the boom head section.

▶ Protecting the pulley: Lay a wooden block **1** under the auxiliary jib pulley.

▶ Insert bushes (Ø80 mm (3.15“ in) x Ø40 mm (1.57“ in) x 43 mm (1.69“ in)) into the upper pin connection points **5** of the main boom head.

▶ Lift the main boom and move it towards the auxiliary jib until the upper pin connection points **3** on the auxiliary jib match the upper connection points of the **5** main boom head.

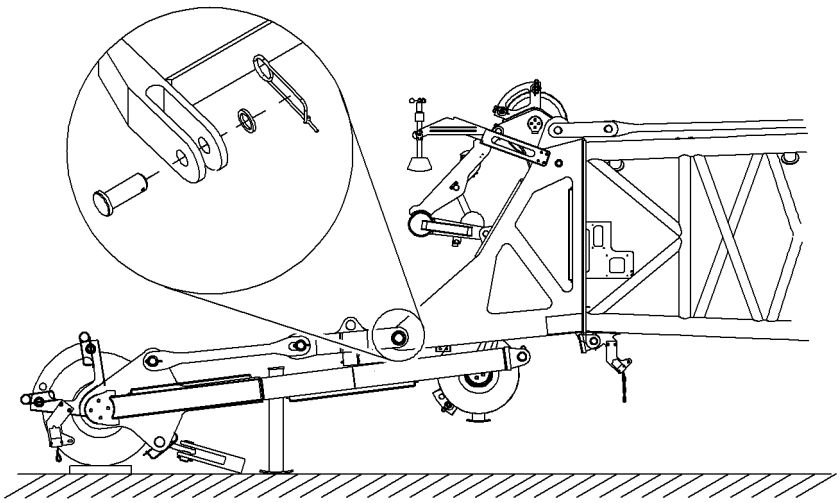

Fig. 3585: Pinning the upper pin connection points

LWN/LR.x/V03.01//Auslieferung/2015-06-03/en

▶ Pin the upper pin connection points and secure with washer and safety pin.

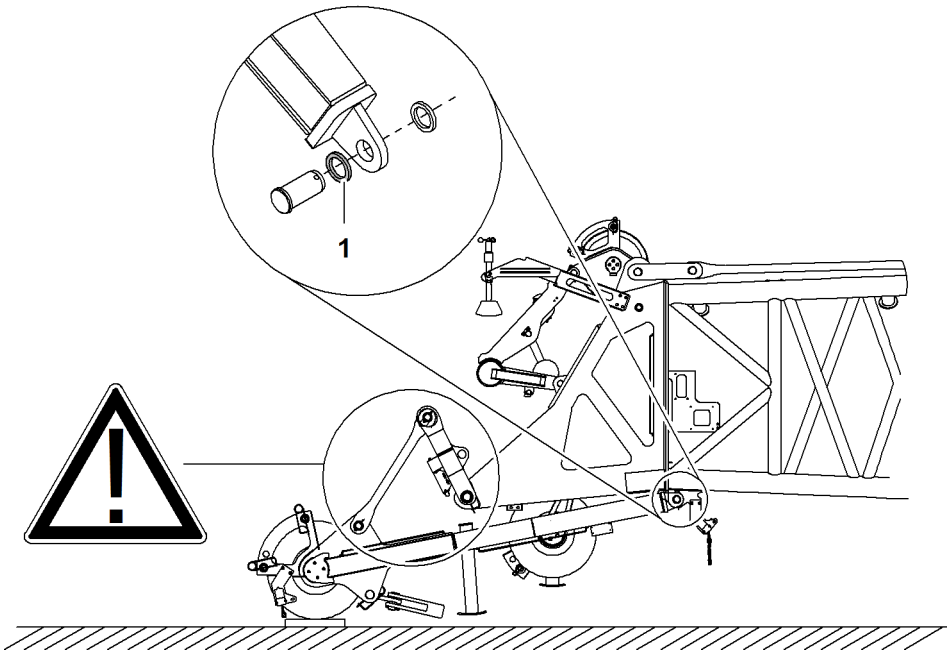

Fig. 3586: Pinning the lower pin connection points

1 Washer 8 mm (0.31“ in) (2x)

The washer 8 mm (0.31“ in) **1** serves to center the auxiliary jib on the main boom head.

NOTICE
Auxiliary jib pendant straps are positioned incorrectly!
Damage to auxiliary jib and pulleys on the boom head section.

▶ Ensure that auxiliary jib pendant straps fold up.

▶ Move the main boom towards the auxiliary jib until the bottom pin connection points **4** on the auxiliary jib match the bottom connection points of the **6** main boom head.

LWN/LR.x/V03.01//Auslieferung/2015-06-03/en

copyright by
LIEBHERR

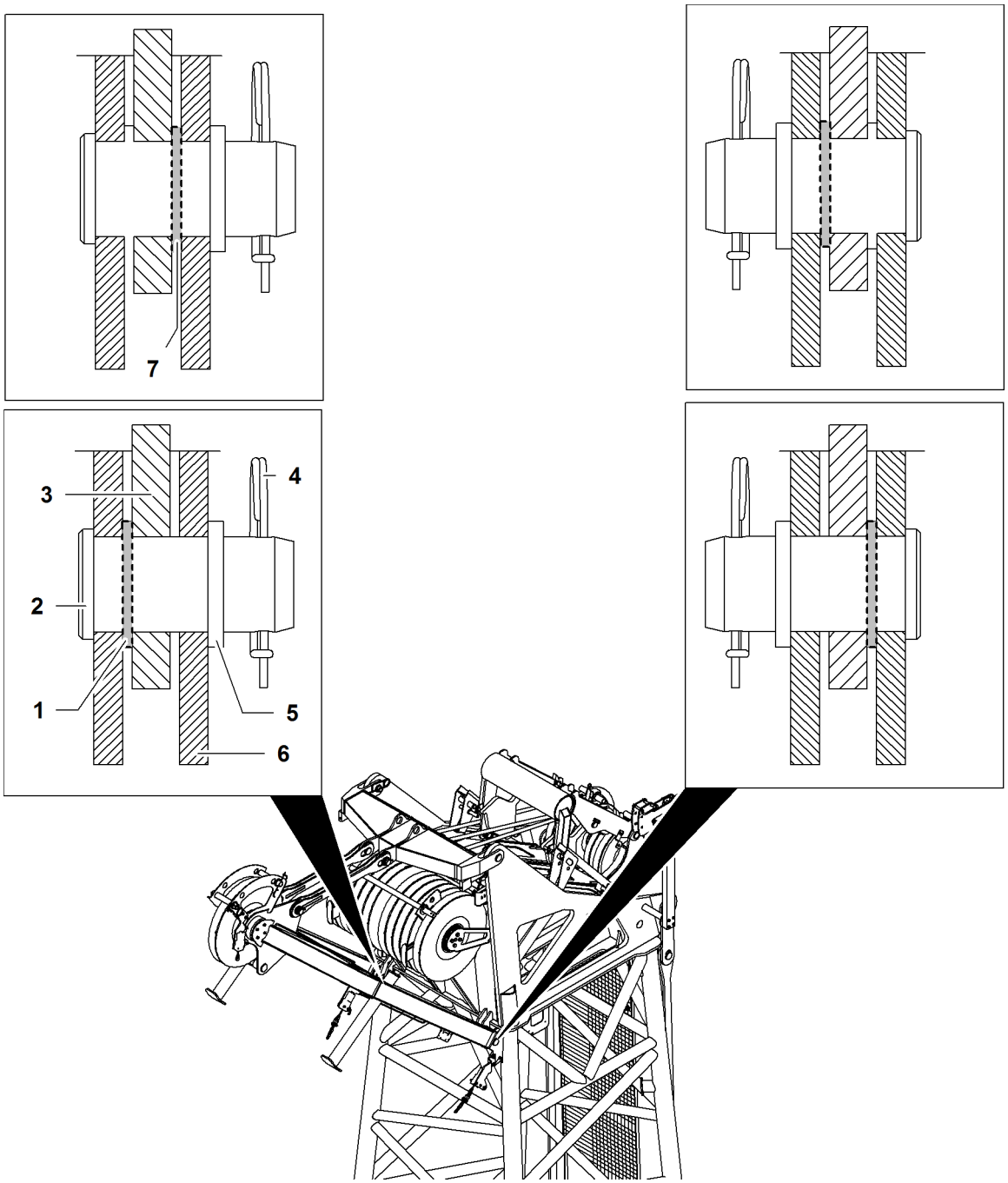

Fig. 3587: Installation notes auxiliary jib

1 Washer 8 mm (0.31“ in) (installation site outside) (2x)
2 Pin (2x)
3 Pin connection lug auxiliary jib (2x)
4 Safety pin (2x)
5 Washer (2x)
6 Pin connection lug main boom head (4x)
7 Washer 8 mm (0.31“ in) (installation site inside) (2x)

The washers 8 mm (0.31“ in) must be installed both-sided on the outside (installation site outside **1**) or both-sided on the inside (installation site inside **7**).

▶ Push pin **2** and washer 8 mm (0.31“ in) **1** through the pin connection lug **3** and the pin connection lug **6**.

▶ Place washer **5** on pin **2** and secure with safety pin **4**.
▷ Lower pin connection points pinned and secured.

LWN/LR.x/V03.01/Auslieferung/2015-06-03/en

copyright by LIEBHERR

Fitting the hoist limit switch to the auxiliary jib

The hoist limit switch is installed on the auxiliary jib in exactly the same way as on the main boom or jib (For more information see: 7.6.30 Installing the hoist limit switch weight, page 1301) (For more information see: Installing the hoist limit switch weight, page 1412) .

Connect the hoist limit switch

The electric cable to the hoist limit switch is connected for transport to a dummy receptacle on the inside of one of the two auxiliary jib support tubes.

- ▶ Disconnect the bypass plug from the terminal box on the boom head section.
- ▶ Disconnect the electric cable for the hoist limit switch from the dummy receptacle and connect it to the terminal box on the boom head section.
- ▶ Secure the electric cable to the hoist limit switch with retaining clips.
- ▶ Plug the bypass plug into the dummy receptacle and secure it with the retaining clips.

Folding down the link plates for the 11th pulley

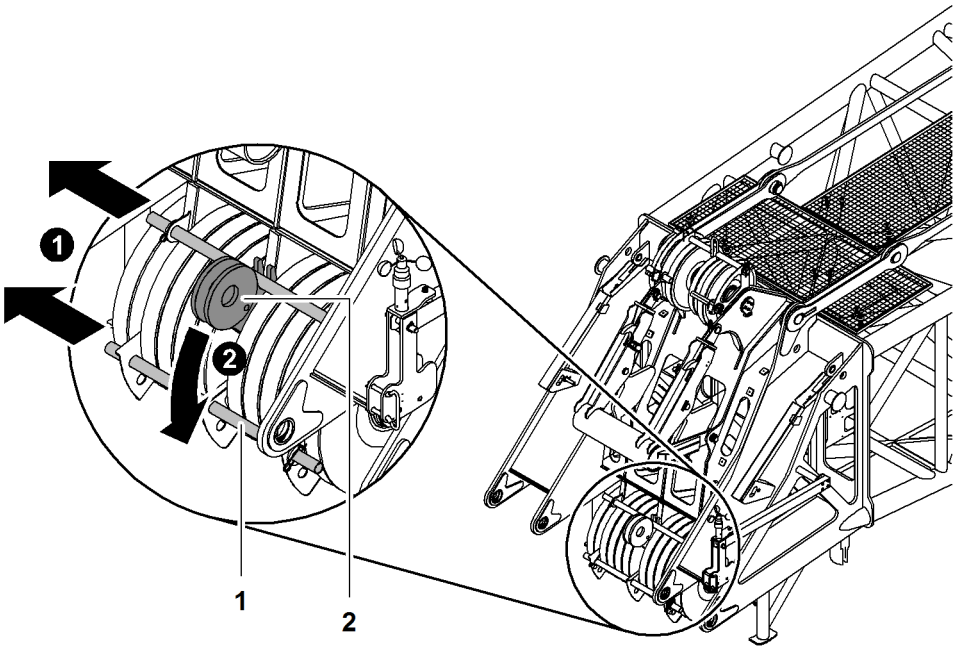

Fig. 3588: Folding down the link plates for the 11th pulley

1 Rope protection pipe (2x) **2** Link plate (2x) for 11th pulley

NOTICE
Wrong position of link plates **2** for 11th pulley on main boom head!
Risk of damage to winch2 rope.

- ▶ Fold down link plates **2** for 11th pulley.

- ▶ Remove rope protection pipes **1** on main boom head.
- ▶ Fold down link plates **2** for 11th pulley.

LWN/LR.x/V03.01//Auslieferung/2015-06-03/en

copyright by LIEBHERR

Installing second pulley to 3-fold reeve the auxiliary jib (36 t (79300 lb))

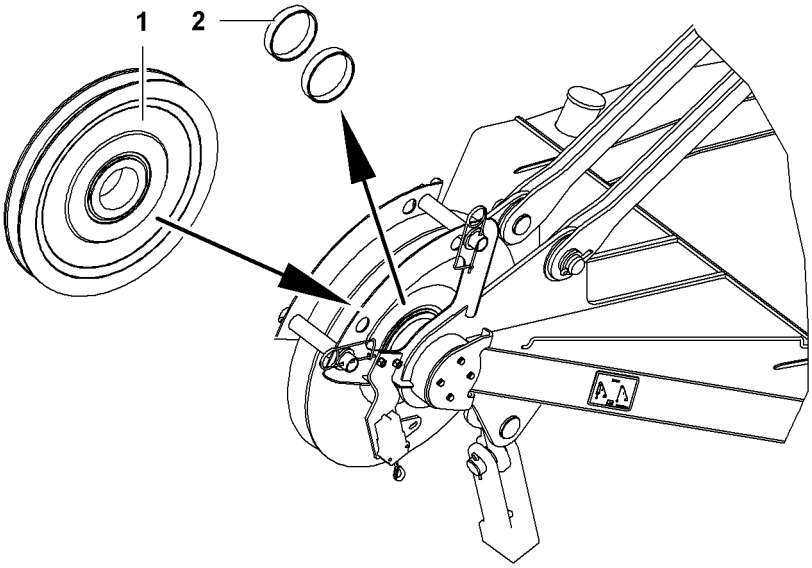

Fig. 3589: Installing second pulley to 3-fold reeve the auxiliary jib (36 t (79300 lb))

1	Second pulley	**2**	Bushes (dia.168 mm (6.61“ in) x Ø140 mm (5.51“ in) x 40 mm (1.57“ in)) (2x)

▶ Remove bushes (dia.168 mm (6.61“ in) x dia.140 mm (5.51“ in) x 40 mm (1.57“ in)) **2**

▶ Install second pulley

LWN/LR.x/V03.01//Auslieferung/2015-06-03/en

copyright by
LIEBHERR

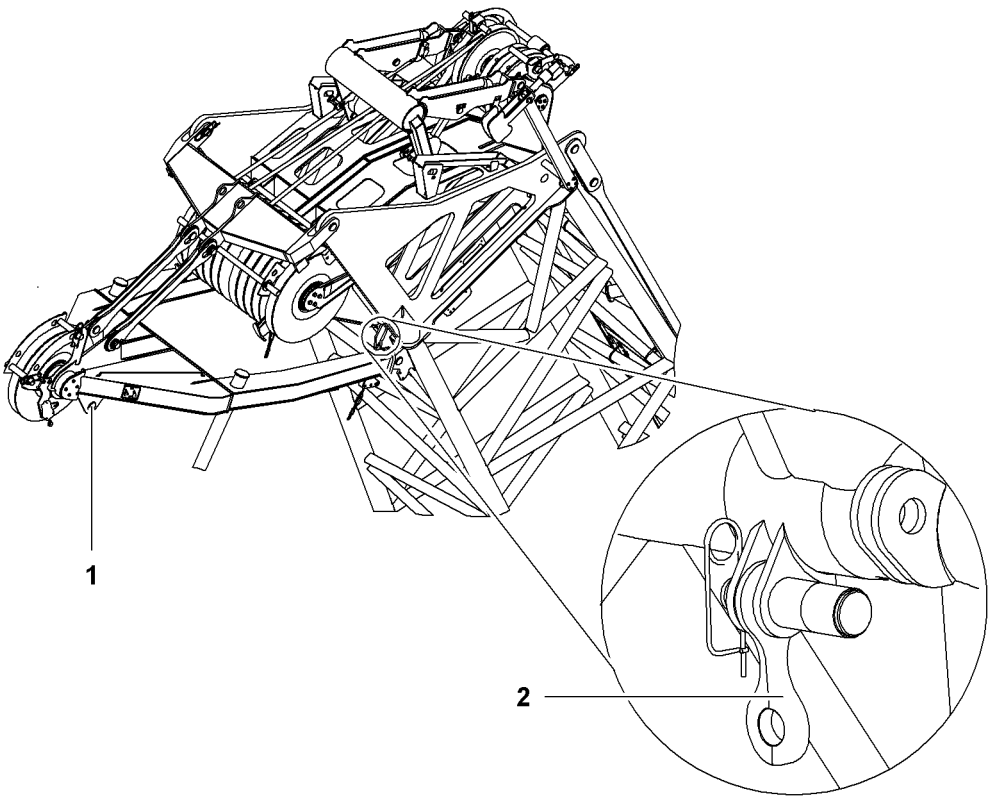

Fig. 3590: Pinning the cross strap to the boom head section

1 Auxiliary jib rope fixing point **2** Cross strap and pins

NOTICE
Cross strap and pins **2** are not positioned correctly at the rope fixing point on the auxiliary jib **1** with 3-fold reeving!
Risk of damage to winch2 rope.

▶ Pin the cross strap to the boom head section.

▶ Remove the cross strap and pins **2** from the rope fixing point of the auxiliary jib **1**.

▶ Pin the cross strap **2** to the boom head section.

Reeving the rope

The rope must be reeved as specified in the rope reeving diagram according to the boom and application requirements.

WARNING
Unsecured walking on the boom!
Risk of falling off the boom.

▶ A fall arrest system must be worn when working on the boom to prevent falling.

Ensure that the following conditions are satisfied:
❑ Cylinder adjustment functions are on.

LWN/LR.x/V03.01//Auslieferung/2015-06-03/en

copyright by LIEBHERR

Reeving the rope using a rope reeving winch

Dismantling rope protection pipes

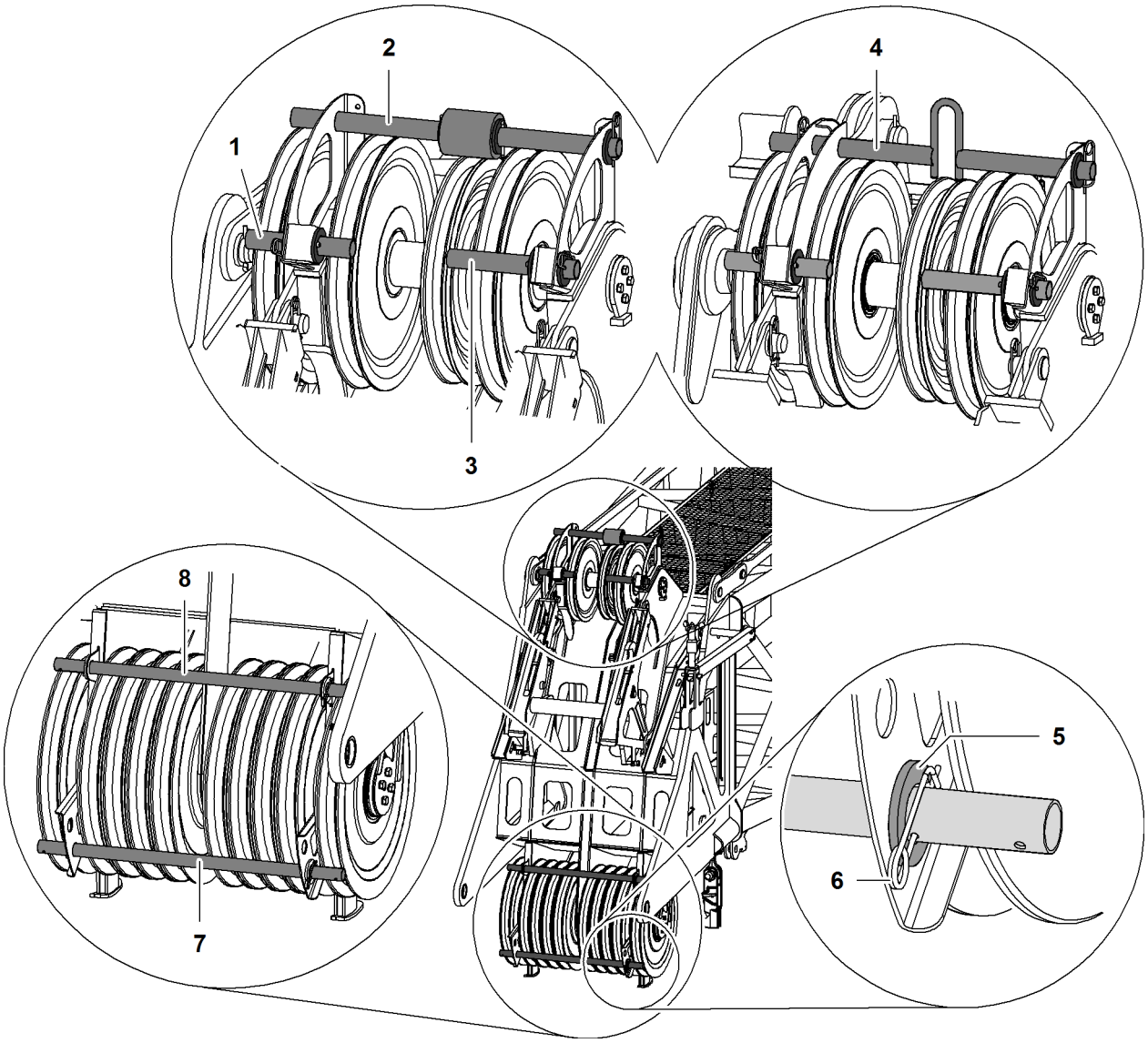

Fig. 3591: Rope protection pipes main boom head 1311, 2017, 2018, 2320, 2220, 2821

1	Rope protection pipe	**4**	Rope protection pipe variant2	**7**	Rope protection pipe
2	Rope protection pipe variant1	**5**	Washer	**8**	Rope protection pipe
3	Rope protection pipe	**6**	Safety pin		

The rope protection pipes are secured with a cotter pin on one side and with a safety pin on the other side.

- ▶ Remove the safety pins **6** and the washers **5**.
- ▶ Remove the rope protection pipes **1 + 2 + 3 + 4 + 7 + 8**.

LWN/LR.x/V03.01//Auslieferung/2015-06-03/en

copyright by
LIEBHERR

Removing the rope protection pipes on auxiliary jib

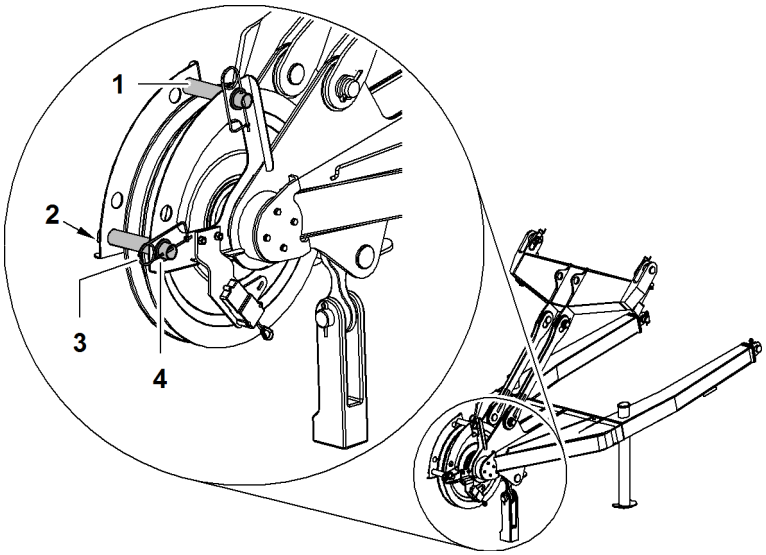

Fig. 3592: Removing the rope protection pipes on auxiliary jib

1	Rope protection pipe (2x)	**3**	Safety pin
2	Cotter pin	**4**	Washer

The rope protection pipes are secured with a cotter pin **2** on one side and with a safety pin **3** on the other side.

▶ Remove rope protection pipes **1** with attached auxiliary jib.

Reeving the rope

▶ Open up the rope guide (if present).

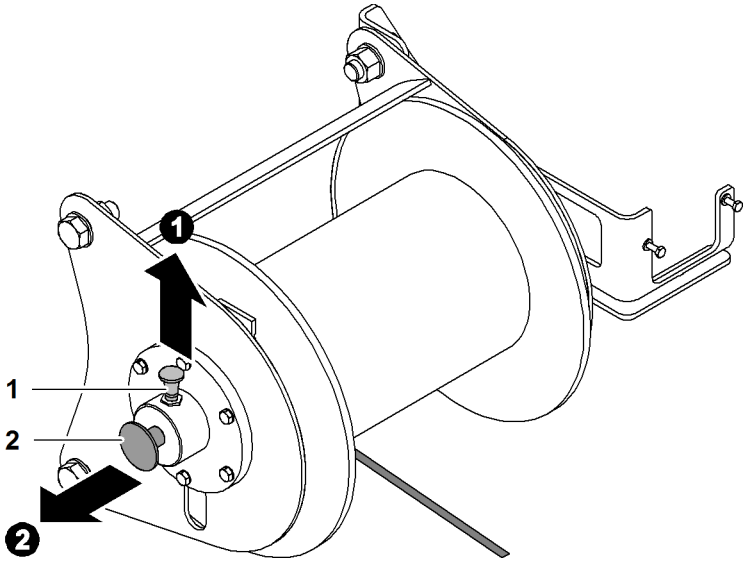

Fig. 3593: Setting the rope lug to free-wheel

1	Securing element	**2**	Shaft

LWN/LR.x/V03.01//Auslieferung/2015-06-03/en

copyright by
LIEBHERR

Note

Liebherr recommends:

▶ Making it easier to pull out the axle **2**: move the rope reeving winch manually back and forth.

▶ Pull up the locking element **1** and pull out the axle **2** at the same time.
▷ Rope reeving winch is set to free-wheel.

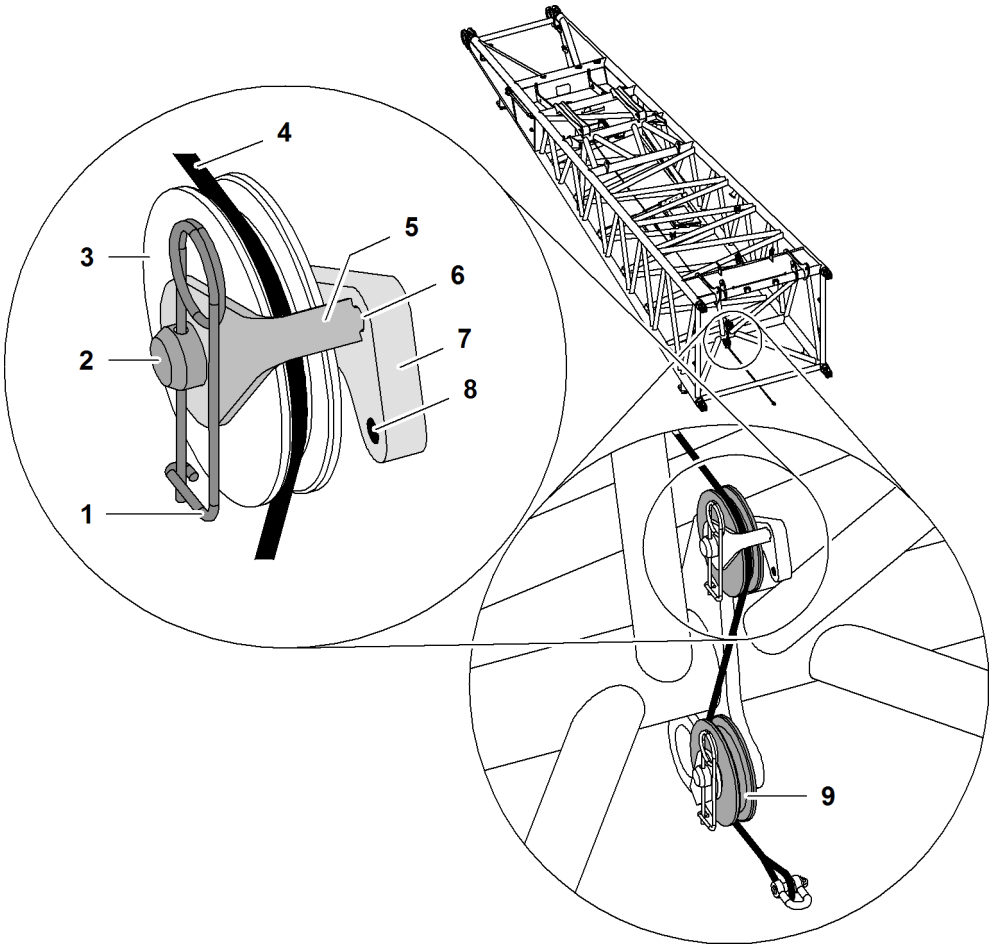

Fig. 3594: Reeving in the luffing rope of the rope reeving winch

1	Safety pin	**6**	Recess
2	Shaft	**7**	Support with recesses
3	Upper pulley	**8**	Recess
4	Rope of the rope reeving winch	**9**	Lower pulley
5	Locking element		

Depending on the machine type, the mounting **7** may have one or two recesses.

▶ Remove safety pins **1**.

▶ Remove **5** securing element.

▶ Place rope of the rope reeving winch **4** across the top pulley **3**.

NOTICE
Wrongly mounted locking element!
Rope of the rope reeving winch jumps out of pulley.

▶ Make sure that the locking element **5** is mounted in recess **6**.

LWN/LR.x/V03.01//Auslieferung/2015-06-03/en

copyright by LIEBHERR

- ▶ Attach locking element **5** to axle **2** and guide in recess **6**.
- ▶ Attach the safety pin **1**.
- ▶ Repeat procedure on bottom pulley **9**.
  - ▷ Rope of the rope reeving winch is guided through pulleys.
- ▶ Pull the luffing rope under the boom to the boom head.
- ▶ Reeve in the rope of the rope reeving winch according to reeving plan.
- ▶ Pull the luffing rope next to the boom towards the basic machine.
- ▶ Lift luffing rope onto boom.
- ▶ Connect luffing rope with rope of winch1/winch2.

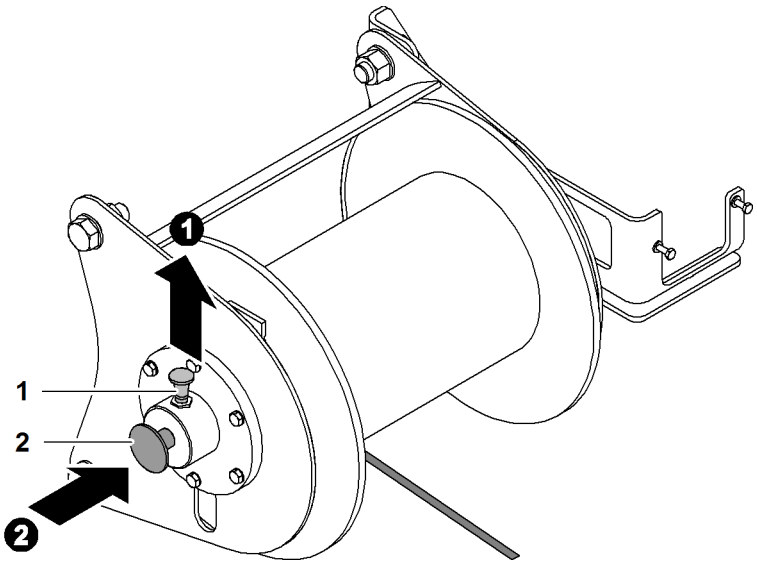

Fig. 3595: Stopping the free-wheel of the rope reeving winch

1 Locking element **2** Shaft

Note

Liebherr recommends:

- ▶ Making it easier to press in the axle **2**: move the rope reeving winch manually back and forth.

- ▶ Pull up the locking element **1** and press in the axle **2** at the same time.
  - ▷ Free-wheel of the luffing rope is deactivated.

WARNING

Never stand in the immediate vicinity of the rope reeving winch or the luffing rope!

- ▶ Make sure that no-one is standing in the danger area.
- ▶ Leave the danger area.

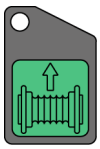

- ▶ Press and hold the *Rope reeving winch* button on control panel *X11*.
  - ▷ Rope reeving winch reeves in the rope of the rope reeving winch and tensions the rope of winch1/winch2.

LWN/LR.x/V03.01//Auslieferung/2015-06-03/en

copyright by LIEBHERR

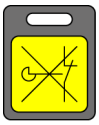

If rope of winch1/winch2 is in the 8th rope layer (only with free-fall winch 130 kN (29,230 lb_f)):

- ▶ Press the *Bypass limit switch* button on control panel *X23*.
  - ▷ The 3-rope windings limit switch is bypassed.

There must be no slacking of the rope when unwinding.

- ▶ Unwind the rope of winch1/winch2 up to the rope fixing point.
- ▶ Press the *Rope reeving winch* button on control panel *X11*.
  - ▷ Rope reeving winch switched off.
- ▶ Remove rope of the rope reeving winch from the rope of winch1/winch2.

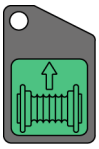

- ▶ Press and hold the *Rope reeving winch* button on control panel *X11*.
  - ▷ Luffing rope is being reeved.
- ▶ Press the *Rope reeving winch* button on control panel *X11*.
  - ▷ Rope reeving winch switched off.
- ▶ Close and secure the rope guide (if present).

Mounting rope protection pipes on main boom head

- ▶ Mount and secure rope protection pipes.

LWN/LR.x/V03.01//Auslieferung/2015-06-03/en

copyright by LIEBHERR

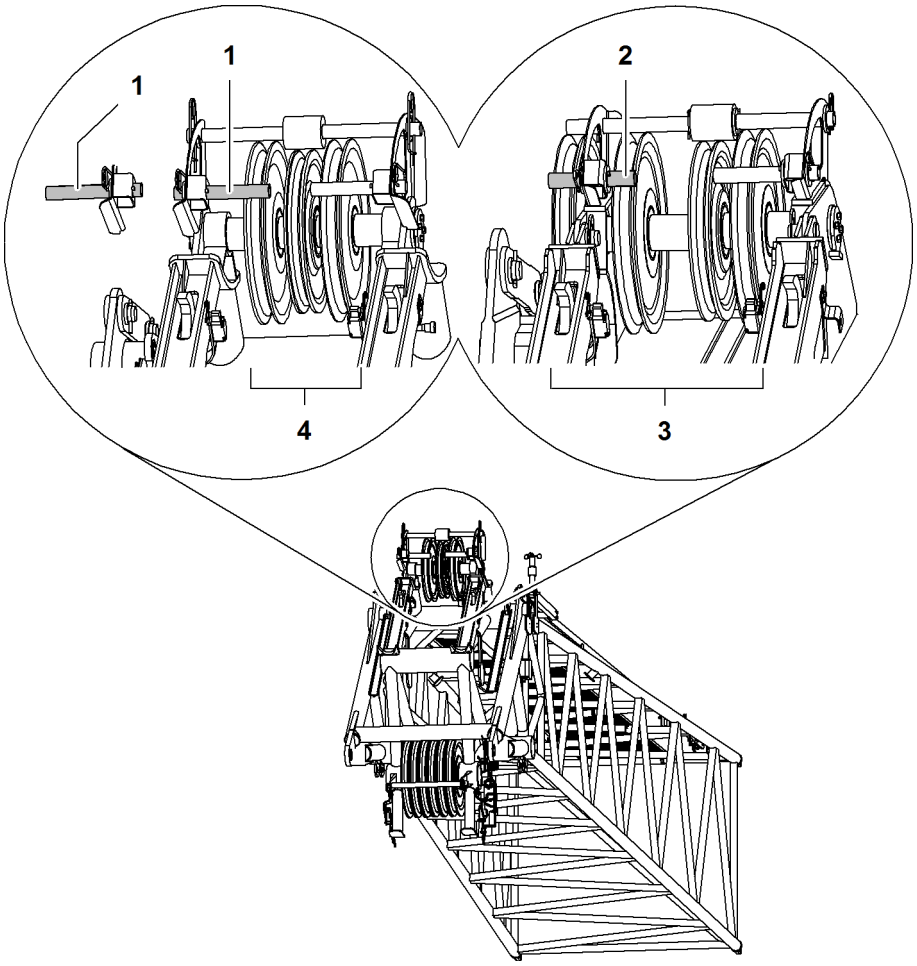

Fig. 3599: Rope protection pipe main boom head section with mounted fixed jib

1	Rope protection pipe	**3**	Main boom head with four gantry pulleys
2	Rope protection pipe	**4**	Main boom head with three gantry pulleys

NOTICE
Inadmissible rope protection pipe with mounted fixed jib!
Rope scrapes on rope protection pipe.
Damage to rope.

▶ Remove rope protection pipe **1 + 2**.

If a fixed jib is being mounted:

▶ Remove rope protection pipe **2** on main boom head.
or

Rotate rope protection pipe **1** by 180° and mount facing outwards.

LWN/LR.x/V03.01//Auslieferung/2015-06-03/en

copyright by
LIEBHERR

Fitting the rope protection pipes to the auxiliary jib

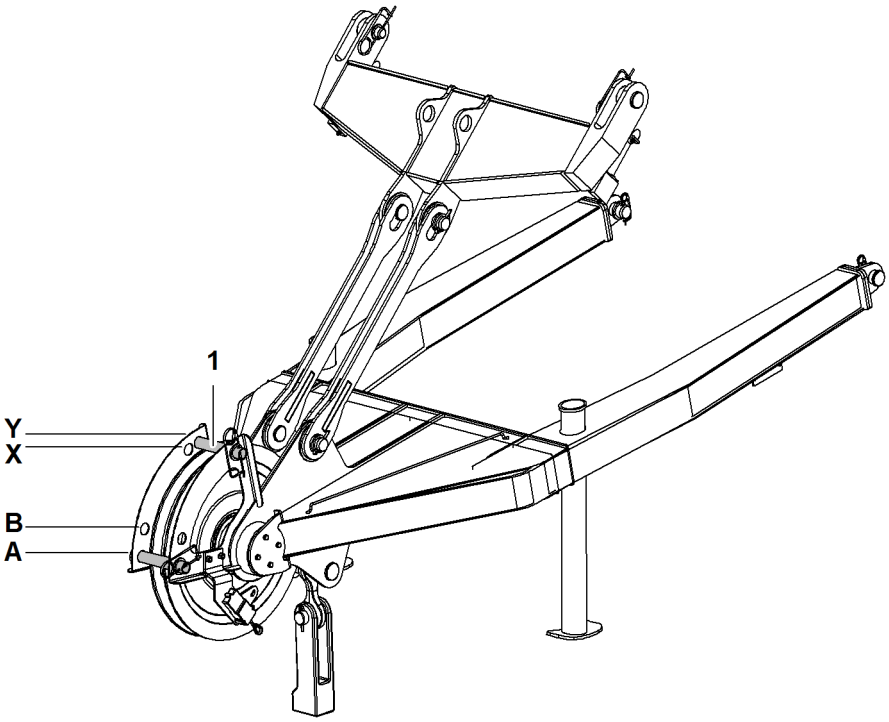

Fig. 3600: Fitting the rope protection pipes to the auxiliary jib

1 Rope protection pipe (2x)
A Assembly position A for rope protection pipe
B Assembly position B for rope protection pipe
X Assembly position X for rope protection pipe
Y Assembly position Y for rope protection pipe

Assembly positions of the rope protection pipes on the auxiliary jib depending on the main boom angle:

Machine type	Main boom angle		
	15° to 30°	20° to 30°	30° to 86°
LR 1001	B + X	-	A + Y
LR 1002	B + X	-	A + Y
LR 1003	B + X	-	A + Y
LR 1004	-	B + X	A + X
LR 1006	-	B + X	A + X

Tab. 488: Assembly positions for rope protection pipes on the auxiliary jib (36 t (79.300 lb)) for main boom head

▶ Mount rope protection pipes on auxiliary jib according to chart.

Reeving the rope without using a rope reeving winch

▶ Remove the rope protection pipes on the boom and the pulley block.

▶ Open up the rope guide (if present).

LWN/LR.x/V03.01/Auslieferung/2015-06-03/en

copyright by LIEBHERR

- Connect auxiliary rope with the rope of winch1/winch2.
- Pull the auxiliary rope next to the boom as far as the boom head.
- Hoist the auxiliary rope onto the boom.
- Reeve the auxiliary rope according to the rope reeving system.

If rope of winch1/winch2 is in the 8th rope layer (only with free-fall winch 130 kN (29,230 lb_f)):

- Press the *Bypass limit switch* button on control panel *X23*.
  - ▷ The 3-rope windings limit switch is bypassed.

There must be no slacking of the rope when unwinding.

- Unwind the rope of winch1/winch2 up to the rope fixing point.
- Remove auxiliary rope from the rope of winch1/winch2.
- Close and secure the rope guide (if present).
- Mount and secure rope protection pipes.

Attaching the rope fixing point

DANGER
Incorrect installation of pins and pocket lock!
Load breakaway.

- Fit pins and pocket lock as instructed.

The collar of the pins and the pocket lock openings are decisive for the installation direction of the rope fixing point.

LWN/LR.x/V03.01//Auslieferung/2015-06-03/en

copyright by
LIEBHERR

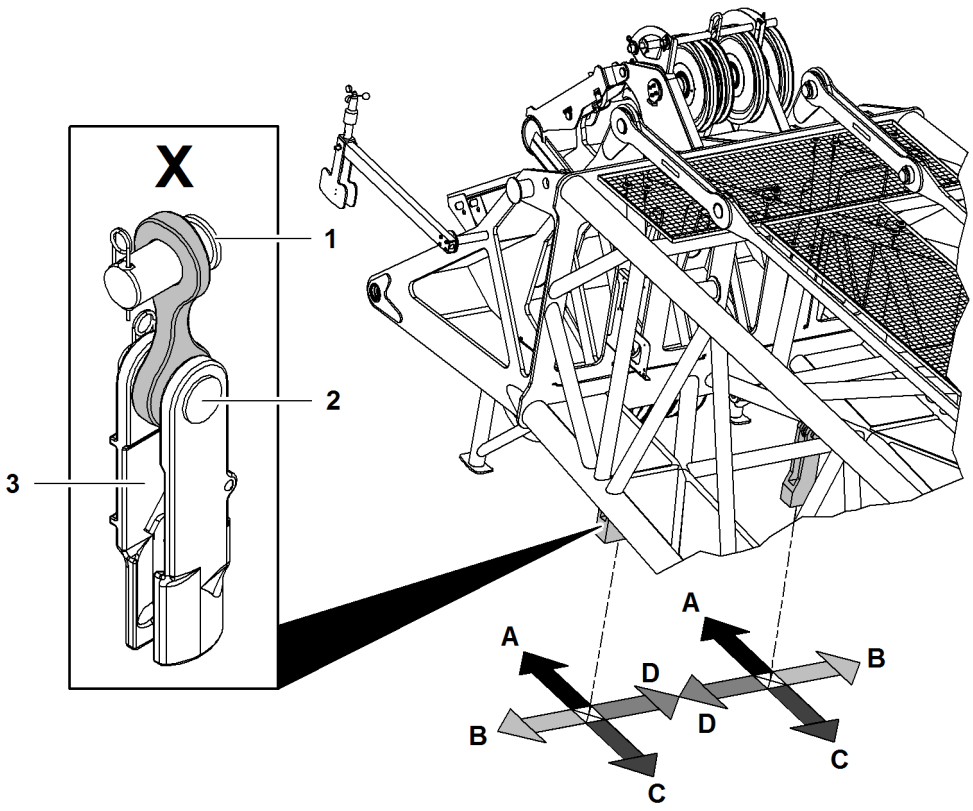

Fig. 3602: Determining the installation direction of the components of the rope fixing point of relevance for installation - main boom head (illustration of principle)

X	Components needed for fitting	**A**	Direction main boom head
1	Shoulder of pin on the boom	**B**	Outside
2	Shoulder of pin on the pocket lock	**C**	Direction basic machine
3	Pocket lock opening	**D**	Inside

LWN/LR.x/V03.01//Auslieferung/2015-06-03/en

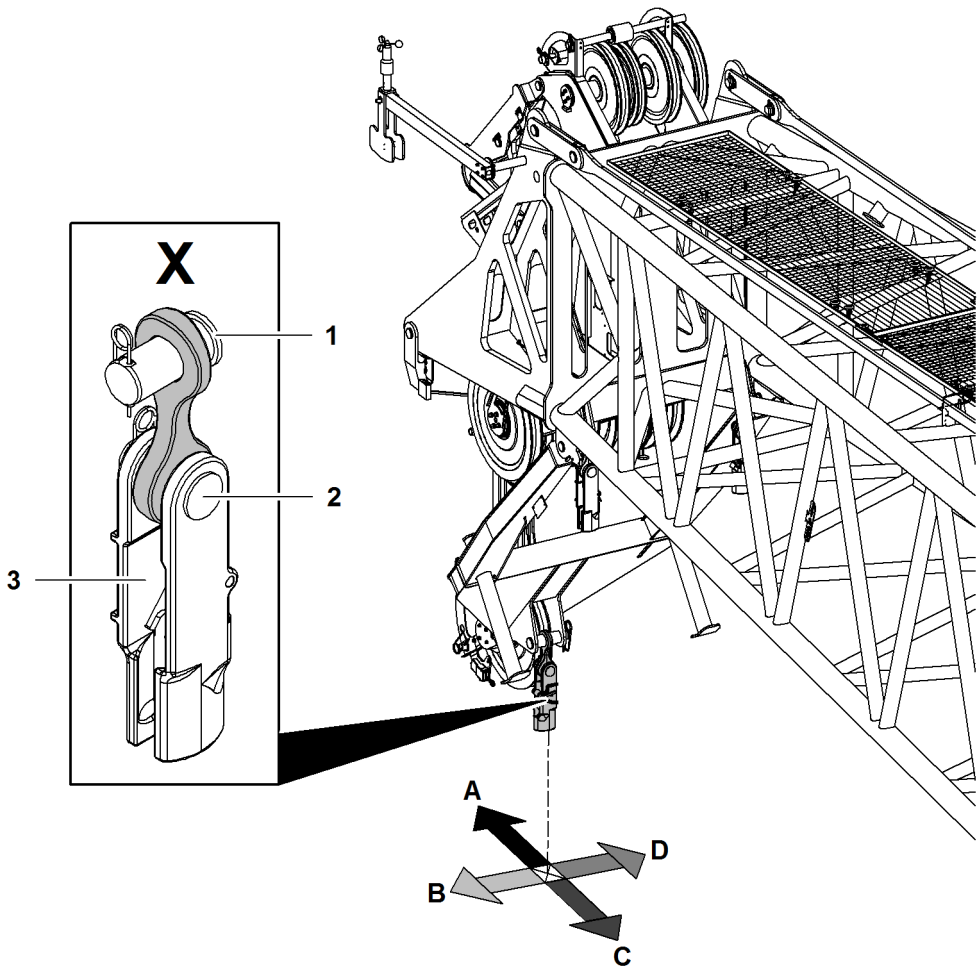

Fig. 3603: Determining the installation direction of the components of the rope fixing point of relevance for installation - auxiliary jib (illustration of principle)

X	Components needed for fitting	**A**	Direction main boom head
1	Shoulder of pin on the boom	**B**	Outside
2	Shoulder of pin on the pocket lock	**C**	Direction basic machine
3	Pocket lock opening	**D**	Inside

Installation direction of the rope fixing point components of relevance for installation			
	Pin collar on boom	**Pin collar on pocket lock**	**Pocket lock opening**
All rope fixing points	D	C	B
Exceptions:			
Fixed jib head 0906	B	C	B
Fixed jib head 1507	B	C	B

Tab. 489: Installation direction of the rope fixing point components of relevance for installation

WARNING
Incorrectly fit swivels!
Severe injuries, damage to machine.

- ▶ Fit rope with no twists.
- ▶ Install the rope without swivels.

LWN/LR.x/V03.01//Auslieferung/2015-06-03/en

copyright by LIEBHERR

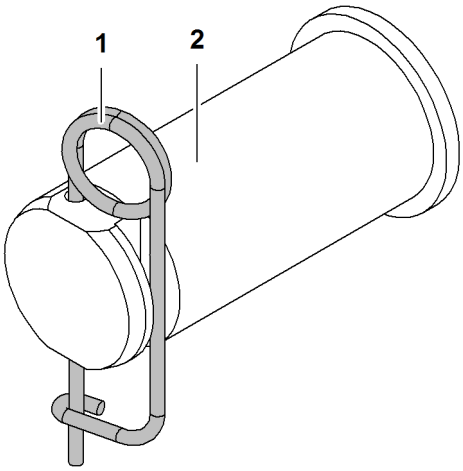

Fig. 3604: Securing the pins

1 Locking spring **2** Pin

DANGER
Pins **2** not completely secured!
Load breakaway.

▶ Ensure that locking spring **1** completely secures the pin **2**.

Installing the rope fixing point on the boom head

▶ Pin cross strap with boom head.

▶ Secure pin with locking spring.

▶ Pin pocket lock with cross strap.

▶ Secure pin with locking spring.

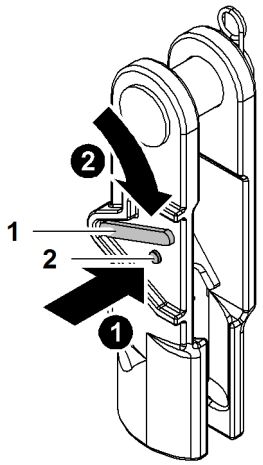

Fig. 3605: Unlocking the pocket lock

1 Safety latch **2** Locking button

▶ Press the locking button **2**.

▶ Press safety latch **1** down and hold.

LWN/LR.x/V03.01//Auslieferung/2015-06-03/en

copyright by
LIEBHERR

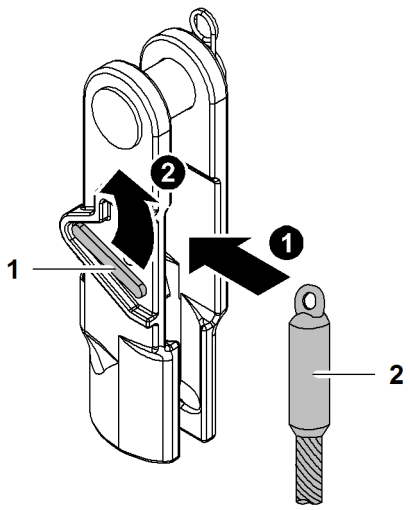

Fig. 3606: Inserting the end of rope into pocket lock and locking the pocket lock

1 Safety latch **2** End of rope

▶ Insert end of rope **2** in pocket lock.

DANGER
End of rope **2** not properly secured!
Load breakaway.

▶ Ensure that the safety latch **1** engages.

▶ Let go of safety latch **1**.
▷ Safety latch **1** engages.

Installing the rope fixing point on the hook or pulley block

▶ Pin pocket lock with hook or pulley block.

▶ Secure pin with locking spring.

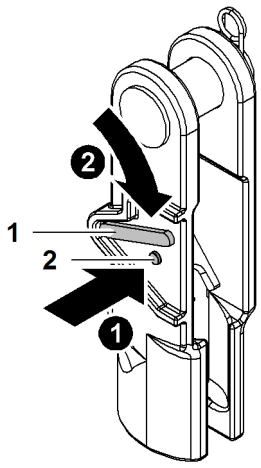

Fig. 3607: Unlocking the pocket lock

1 Safety latch **2** Locking button

▶ Press the locking button **2**.

▶ Press safety latch **1** down and hold.

LWN/LR.x/V03.01//Auslieferung/2015-06-03/en

copyright by
LIEBHERR

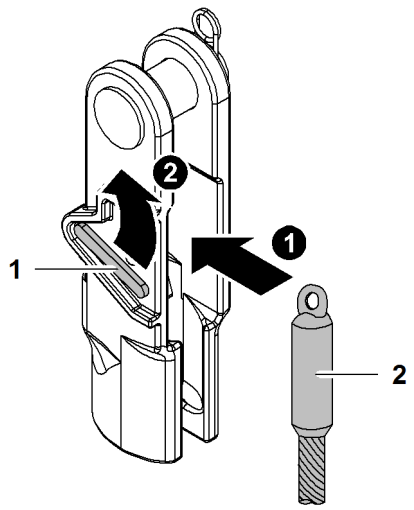

Fig. 3608: Inserting the end of rope into pocket lock and locking the pocket lock

1 Safety latch **2** End of rope

▶ Insert end of rope **2** in pocket lock.

DANGER
End of rope **2** not properly secured!
Load breakaway.

▶ Ensure that the safety latch **1** engages.

▶ Let go of safety latch **1**.
▷ Safety latch **1** engages.

Installing the hoist limit switch weight

NOTICE
Improper installation of the hoist limit switch weight!
Damage to the rope and hoist limit switch weight.

▶ Fit the hoist limit switch weight with no diagonal pull.

▶ Always install the hoist limit switch weight on the slack rope of winch1/winch2, except with simple reeving.

LWN/LR.x/V03.01//Auslieferung/2015-06-03/en

copyright by
LIEBHERR

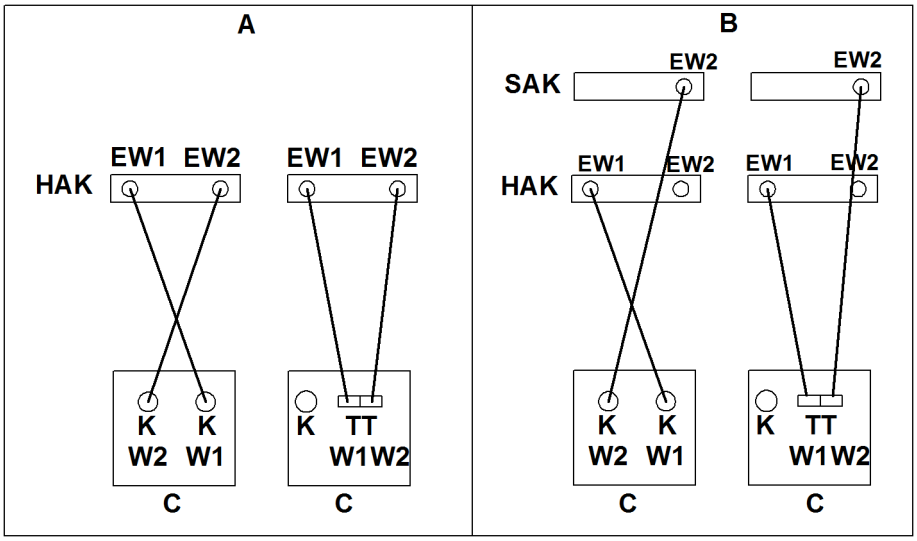

Fig. 3609: Hoist limit switch assignment in dependence on winch1/winch2

A Boom configuration main boom
B Boom configuration main boom + jib head member
C Cabin
EW1 Hoist limit switch winch1
EW2 Hoist limit switch winch2
HAK Main boom head section
K Joystick
SAK Auxiliary jib
TT Double T-control lever
W1 winch1
W2 winch2

NOTICE
Wrong hoist limit switch!
Hoist limit switch does not turn off.

▶ Make sure that the correct hoist limit switch for the correct rope of winch1/winch2 is used.

The hoist limit switch with chain and hoist limit switch weight attached is secured to the inoperative end of the hoist rope.

LWN/LR.x/V03.01//Auslieferung/2015-06-03/en

copyright by
LIEBHERR

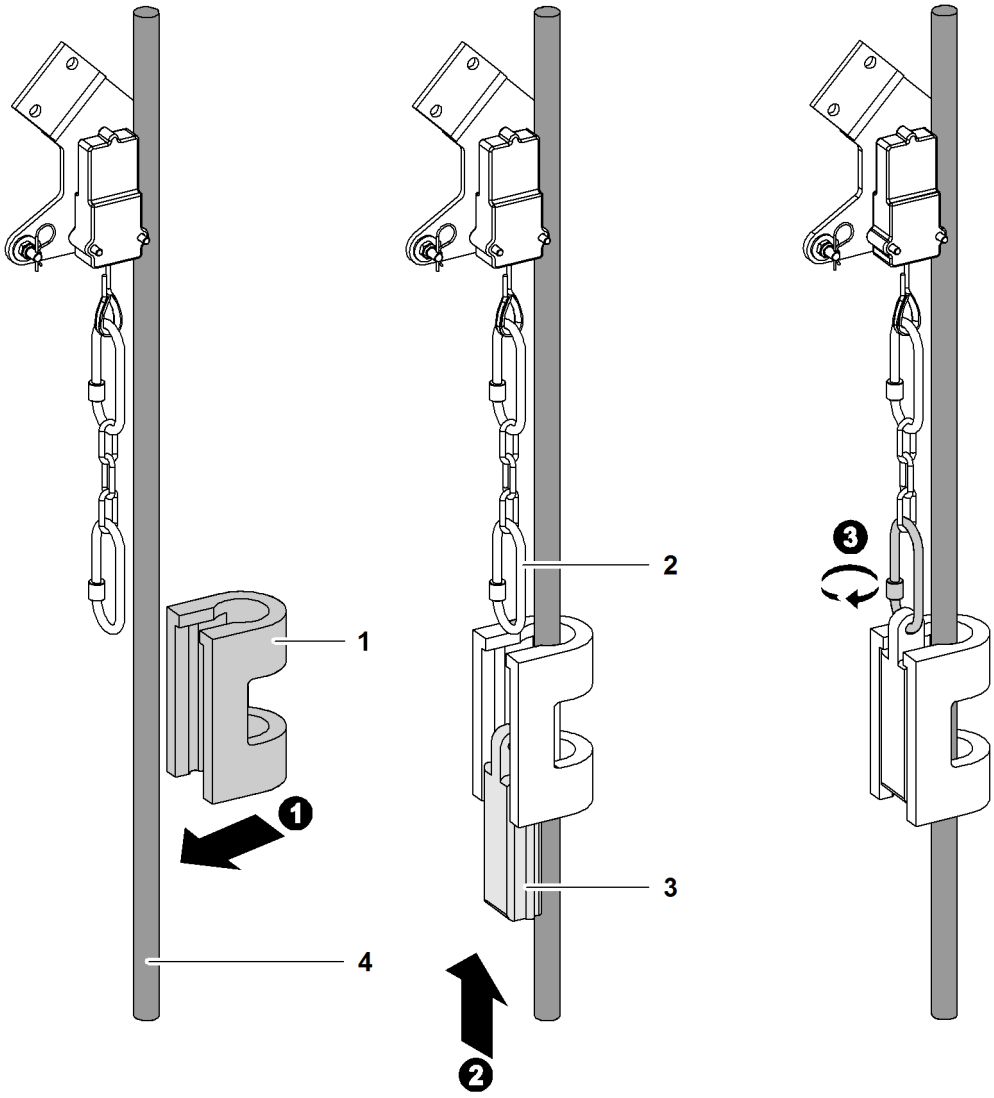

Fig. 3610: Fitting the hoist limit switch weight

1	Hoist limit switch weight (U shape)	**3**	Hoist limit switch weight (wedge)
2	Carabiner	**4**	Rope of winch1/winch2

▶ Guide the hoist limit switch weight (U shape) **1** over the rope of winch1/winch2 **4**.

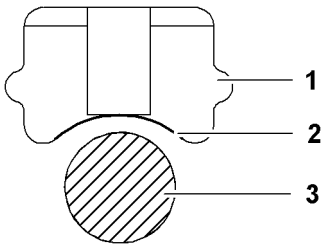

Fig. 3611: Hoist limit switch weight (wedge) view from above

1	Hoist limit switch weight (wedge)	**3**	Rope of winch1/winch2
2	Curvature		

The hoist limit switch weight (wedge) **1** has a curvature **2** on one side.

LWN/LR.x/V03.01//Auslieferung/2015-06-03/en

copyright by
LIEBHERR

NOTICE
Wrongly installed hoist limit switch weight (wedge)!
Hoist limit switch weight (wedge) damaged with wrong installation of rope of winch1/winch2.

▶ Make sure that the curvature of the hoist limit switch weight (wedge) is installed in the direction of the rope of winch1/winch2.

▶ Insert the hoist limit switch weight (wedge) **1** from below into the hoist limit switch weight (U shape).

▶ Attach the carabiner to the hoist limit switch weight (wedge) **1**.

Note

Liebherr recommends:
▶ visual inspection of the carabiner hook prior to installation.

▶ Clean dirty carabiner hook with a clean cloth and water.

▶ If necessary, re-clean with a slightly oily cloth.

NOTICE
Improper installation of carabiner!
Damage to machine.

▶ Make sure that the screw of the carabiner points downwards.

▶ Make sure that the securing element is twisted shut.

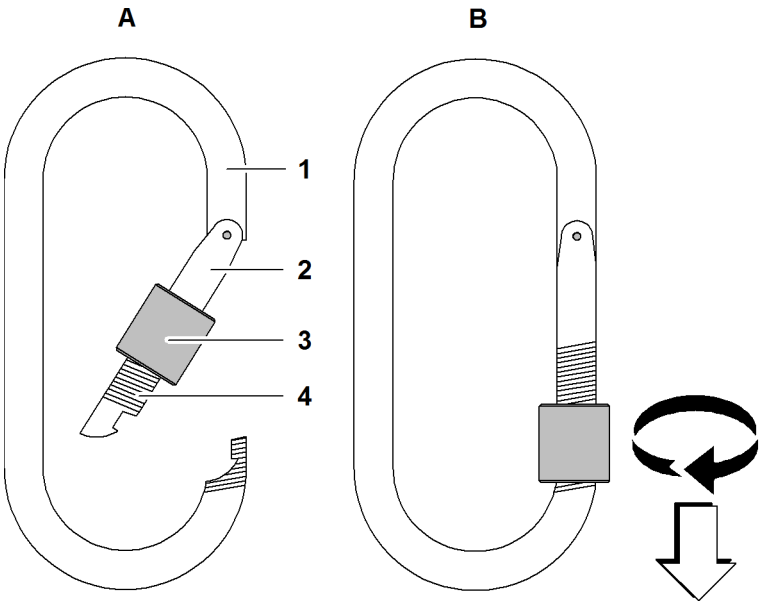

Fig. 3612: Carabiner

1	Carabiner	**4**	Thread
2	Snapper	**A**	Opened carabiner
3	Securing element	**B**	Closed carabiner

▶ Secure carabiner **1** with securing element **3**.

LWN/LR.x/V03.01//Auslieferung/2015-06-03/en

copyright by LIEBHERR

NOTICE
The chain on the hoist limit switch weight is too short!
The hoist limit switch weight responds too late. The hook damages the boom head.

▶ Ensure that hoist limit switch weight chain is at least 3 m (9‘ 10“ ft-in) and at most 4.5 m (14‘ 9“ ft-in) long.

▶ Attach the chain between the hoist limit switch weight and the hoist limit switch.

Bypass unused hoist limit switches.

DANGER
The hoist limit switch has been bypassed illegally!
Load breakaway.

▶ Only ever bypass unused hoist limit switches.

NOTICE
Wrong hoist limit switch is bypassed!
The hook damages the boom head.

▶ Lock winch 1 using the left hoist limit switch.

▶ Lock winch 2 using the right hoist limit switch.

Ensure that the following conditions are fulfilled:
❑ Only motion is performed with a rope of winch1/winch2. A hoist limit switch is not required.

LWN/LR.x/V03.01//Auslieferung/2015-06-03/en

copyright by
LIEBHERR

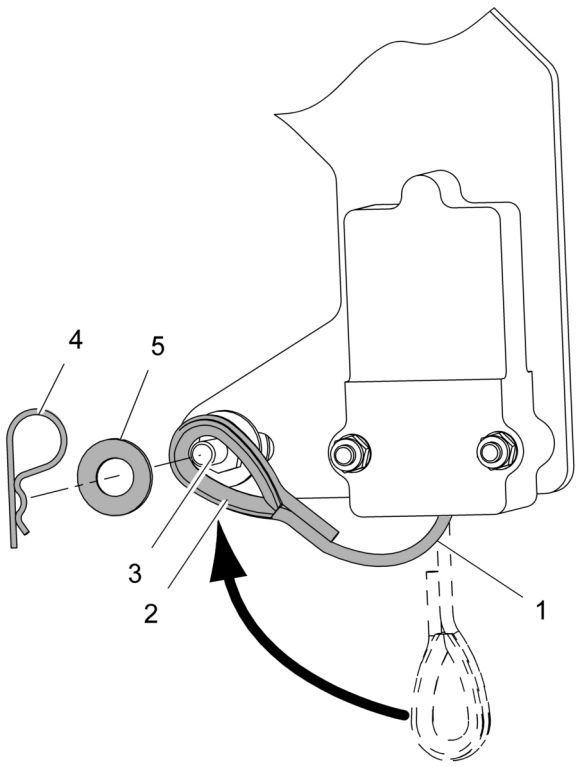

Fig. 3613: Bypassing the hoist limit switch mechanically

1	Steel rope	**4**	Safety pin
2	Loop	**5**	Washer
3	Stud bolt		

▶ Pull the steel rope **1** and place the loop **2**over the stud bolt **3**.
▷ Hoist limit switch is bypassed.

▶ Protect the sling **2** from slipping off the stud bolt **3** by securing it with a washer **5** and a safety pin **4**.

LWN/LR.x/V03.01//Auslieferung/2015-06-03/en

copyright by
LIEBHERR

7.10 Assembly of suspended counterweight of derrick equipment*

The suspended counterweight must be assembled before “erecting the main boom with derrick equipment*”. This makes assembly with the assist crane easier.

Make sure the following prerequisites are met:
❑ Assist crane is available.

7.10.1 Positioning the counterweight frame

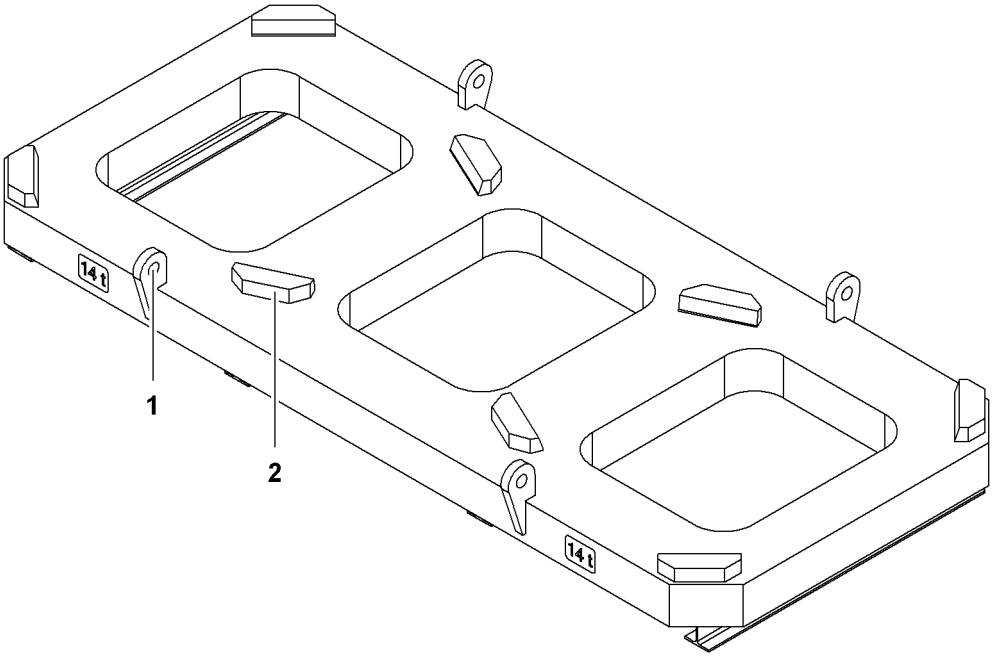

Fig. 3614: Positioning the counterweight frame

1 Rigging point (4x) **2** Locking device (8x)

▶ Rig counterweight frame on rigging points **1**.

▶ Lift counterweight frame.

▶ Center and place the counterweight frame on the ground approx. 6.5 m (21‘ 4“ ft-in) behind the bolting points of the spacer frame.

7.10.2 Positioning the ballast slabs

DANGER
Incorrect counterweight!
Machine toppling over.

▶ Place ballast slabs in the center of gravity (central) on the counterweight frame.

▶ Do not exceed the maximum permitted counterweight.

▶ Position ballast slabs on the counterweight frame.

LWN/LR.x/V03.01//Auslieferung/2015-06-03/en

copyright by LIEBHERR

DANGER
Slipping of the ballast slabs!
Machine toppling over.

▶ Pile of ballast slabs so that they are secured by the locking pins.

If no original ballast slabs are used:
▶ Secure counterweight slabs with tension chains.

▶ Secure counterweight slabs.

7.10.3 Release the pendant ropes from the derrick boom

Releasing the temporary attachment

The suspended counterweight pendant ropes temporarily attached to the derrick boom earlier must be released before it is erected.

WARNING
Unsecured walking on the boom!
Risk of falling.

▶ A fall arrest system must be worn when working on booms to prevent falling.

▶ Release the temporary attachment of the suspended counterweight pendant ropes on the derrick boom.

▶ Place the fastening materials in temporary storage.

Securing auxiliary rope

▶ Attach an auxiliary rope to each of the suspended counterweight pendant ropes on the left and right.
  ▷ These enable assistants to guide the suspended counterweight pendant ropes when erecting the derrick boom.

LWN/LR.x/V03.01//Auslieferung/2015-06-03/en

copyright by
LIEBHERR

7.11 Assembly of counterweight carriage of derrick equipment*

The counterweight carriage is delivered in two parts.

7.11.1 Positioning the wheeled counterweight carriage

Ensure that the following conditions are fulfilled:
❑ Wheel sets are parallel to counterweight frame.

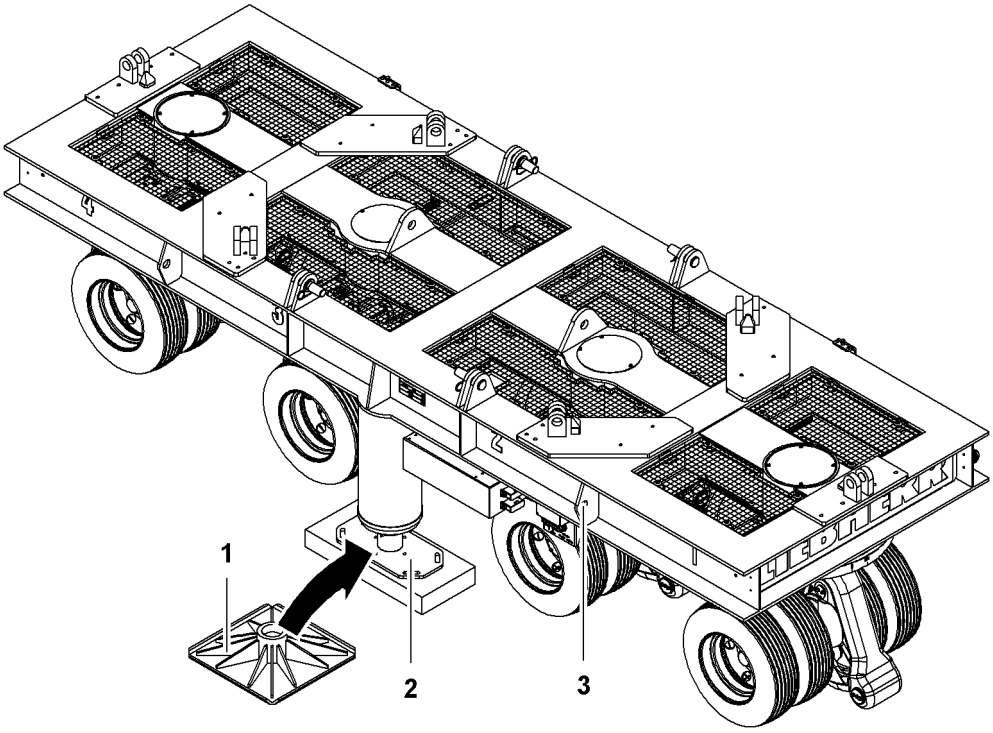

Fig. 3615: Positioning the wheeled counterweight carriage

1 Working base plate (2x)
2 Transport base plate (2x)
3 Rigging point (4x)

▶ Rig counterweight carriage on rigging points **3**.

▶ Lift counterweight carriage.

▶ Lower counterweight carriage to the ground.

▶ Replace transport base plates **2** with working base plates **1**.

7.11.2 Attach the telescopic unit

Ensure that the following conditions are fulfilled:
❑ Counterweight carriage is horizontal.

LWN/LR.x/V03.01//Auslieferung/2015-06-03/en

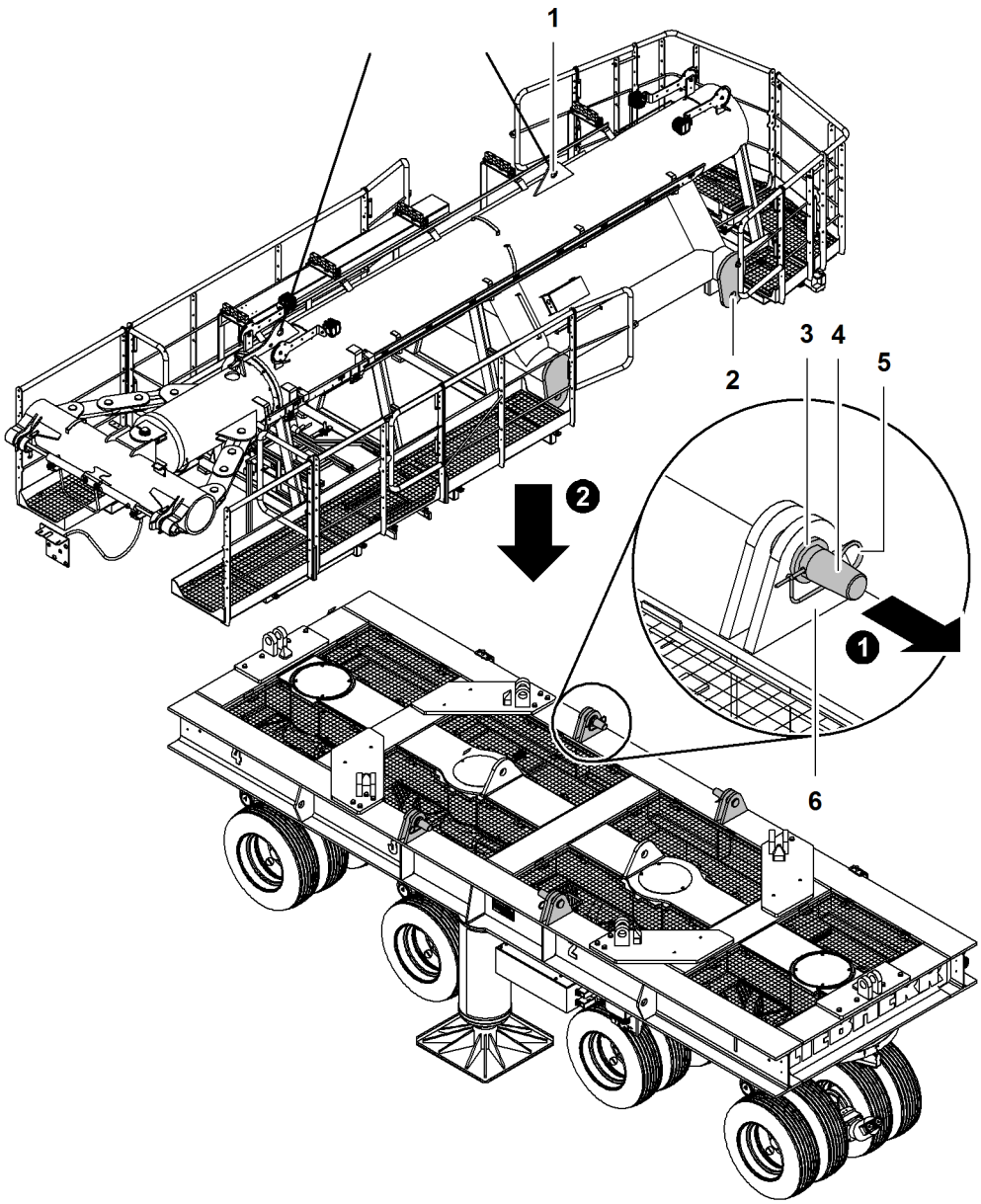

Fig. 3616: Attaching the extension device

1	Rigging point (2x)	**4**	Pin
2	Pin connection point (4x) for extension device	**5**	Locking spring
3	Washer (2x)	**6**	Pin connection point (4x) on counterweight carriage

- ▶ Remove locking spring **5**.
- ▶ Remove pins **4** and washers **3**.
- ▶ Repeat procedure on all pin connection points **6** of the counterweight carriage.
- ▶ Rig extension device on rigging points **1**.
- ▶ Lift extension device.

LWN/LR.x/V03.01//Auslieferung/2015-06-03/en

copyright by
LIEBHERR

NOTICE
Improper positioning of extension device on counterweight carriage!
Damage to electric lines.

- ▶ Ensure that electric lines are not damaged when positioning the extension device on the counterweight carriage.

- ▶ Position extension device on counterweight carriage.

If the pin connection points **2** of the extension device aligns with the pin connection points **6** of the counterweight carriage:

- ▶ Bolt the telescopic unit to the wheeled counterweight carriage.
- ▶ Secure pin **4** with washers **3** and locking spring **5**.
- ▶ Repeat procedure on all pin connection points **6** of the counterweight carriage.

7.11.3 Connecting electric lines and hydraulic lines

- ▶ Plug electric lines of the counterweight carriage on terminal box of the extension device.
- ▶ Secure the electric plug in place.

Note
The hydraulic screw fittings are color-coded!

- ▶ Connect hydraulic lines of the same color.

- ▶ Screw hydraulic lines of the extension device into the back of the counterweight carriage.

LWN/LR.x/V03.01//Auslieferung/2015-06-03/en

copyright by
LIEBHERR

7.11.4 Placing ladder and floodlight in working position

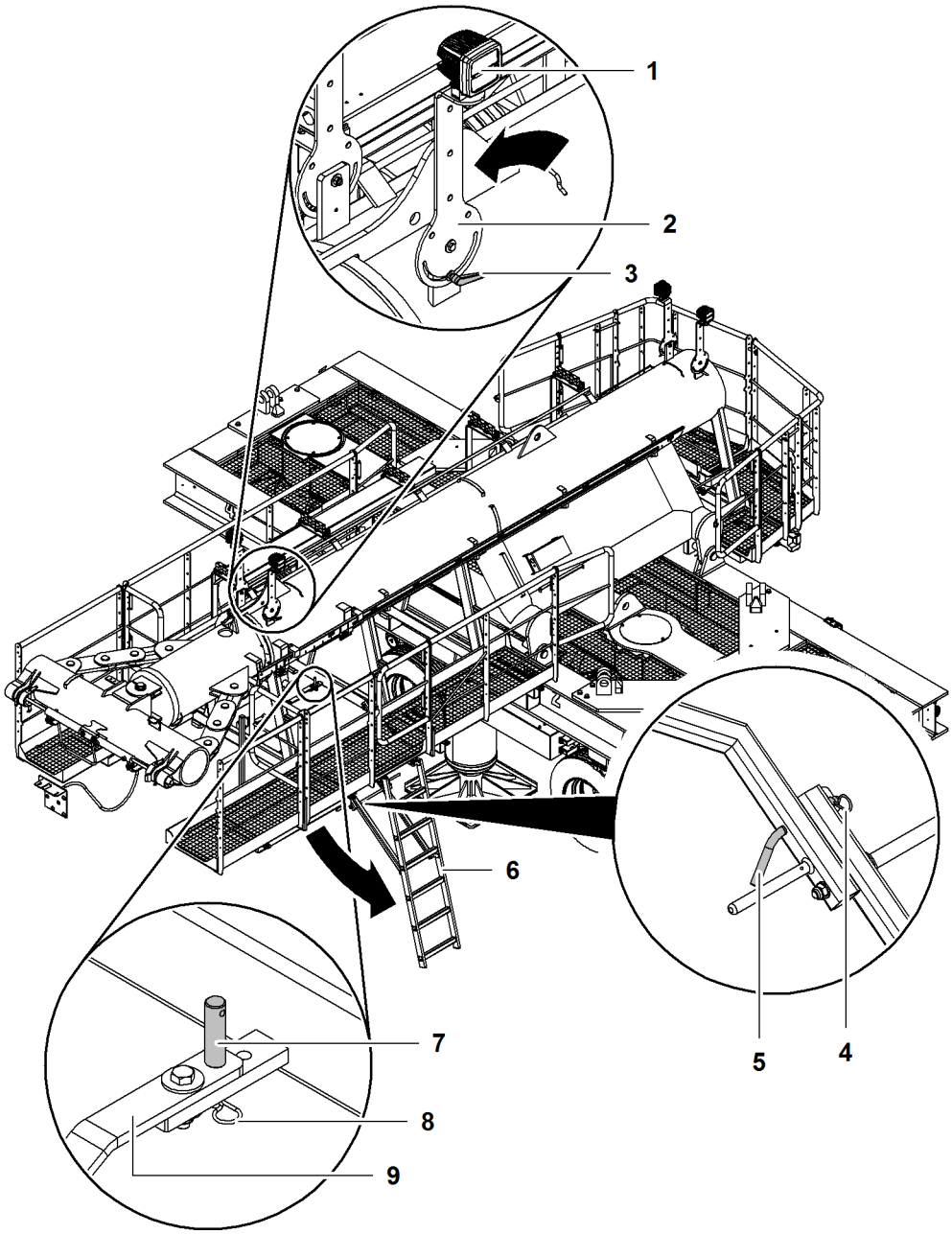

Fig. 3617: Placing ladder and floodlight in working position

1	Floodlight (4x)	**6**	Ladder
2	Bracket (4x)	**7**	Pin (2x)
3	Clamping device (4x)	**8**	Spring cotter pin (2x)
4	Spring cotter pin (2x)	**9**	Bar (2x)
5	Pin (2x)		

▶ Remove spring cotter pin **8**.

▶ Remove pin **7**.

▶ Turn bar **9** by 90°.

▶ Reinsert pin **7**.

▶ Secure pin **7** with spring cotter pin **8**.

LWN/LR.x/V03.01//Auslieferung/2015-06-03/en

copyright by
LIEBHERR

- ▶ Repeat procedure on opposite side.
- ▶ Remove spring cotter pin **4**.
- ▶ Remove pin **5**.
- ▶ Repeat procedure on opposite side.
- ▶ Fold ladder **6** down.
- ▶ Reinsert pin **5**.
- ▶ Secure pin **5** with spring cotter pin **4**.
- ▶ Repeat procedure on opposite side.
  ▷ Ladder is in working position.
- ▶ Undo clamping device **3**.
- ▶ Turn bracket **2** by 90°.
- ▶ Tighten clamping device **3**.
- ▶ Repeat procedure on all floodlights **1**.
  ▷ Floodlights are in working position.

7.11.5 Installing the counterweight carriage on the basic machine

Ensure that the following conditions are fulfilled:
❑ Counterweight carriage is assembled.

LWN/LR.x/V03.01//Auslieferung/2015-06-03/en

copyright by
LIEBHERR

Position the basic machine in front of the wheeled counterweight carriage

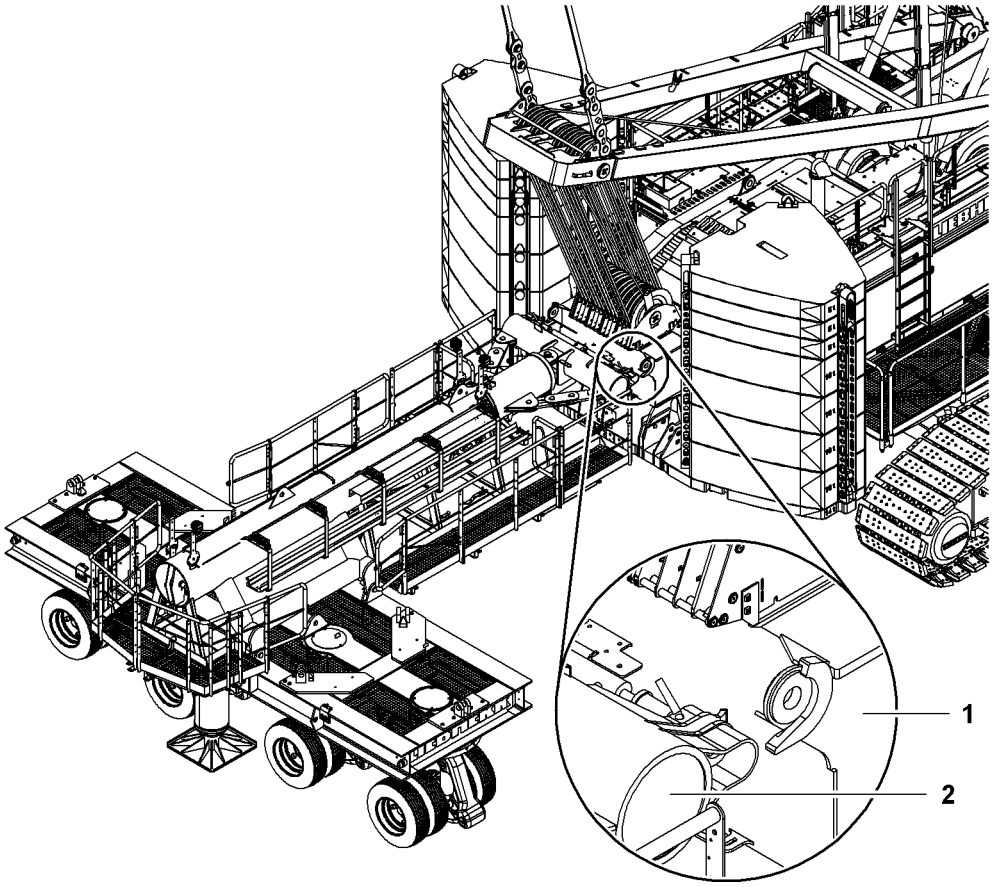

Fig. 3618: Positioning the basic machine in front of the counterweight carriage

1 Basic machine **2** Counterweight carriage

▶ Position rear of basic machine **1** in front of counterweight carriage **2**.

▶ Ensure that the hydraulic lines and electric lines between the basic machine and the counterweight carriage can be connected.

Connecting electric lines and hydraulic lines with basic machine

▶ Plug the electric lines of the counterweight carriage into the basic machine.

▶ Lock electric plug.

Note
The hydraulic screw fittings are color-coded!

▶ Connect hydraulic lines of the same color.

▶ Screw hydraulic lines of the counterweight carriage onto the basic machine.

LWN/LR.x/V03.01//Auslieferung/2015-06-03/en

copyright by
LIEBHERR

Aligning the wheeled counterweight carriage

- Press the *Mode* button on the monitor.
  - The *Mode* screen is displayed on the monitor.

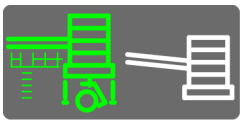

If the counterweight carriage of the button *Counterweight carriage/suspended counterweight* is not lit green:

- press the *Counterweight carriage/suspended counterweight* button on the monitor.
  - Counterweight carriage of the button *Counterweight carriage/suspended counterweight* is lit blue.

- Press and hold the *Mode* button on control panel *X12*.

- Press the *Confirm* button on the monitor.

- Let go of the *Mode* button on control panel *X12*.
  - The symbol *Restart machine* is displayed on the monitor:

Fig. 3623: Symbol Restart machine

- Turn off ignition.
- Start diesel engine after approx. 10 seconds.
  - Counterweight carriage is selected.

LWN/LR.x/V03.01//Auslieferung/2015-06-03/en

copyright by
LIEBHERR

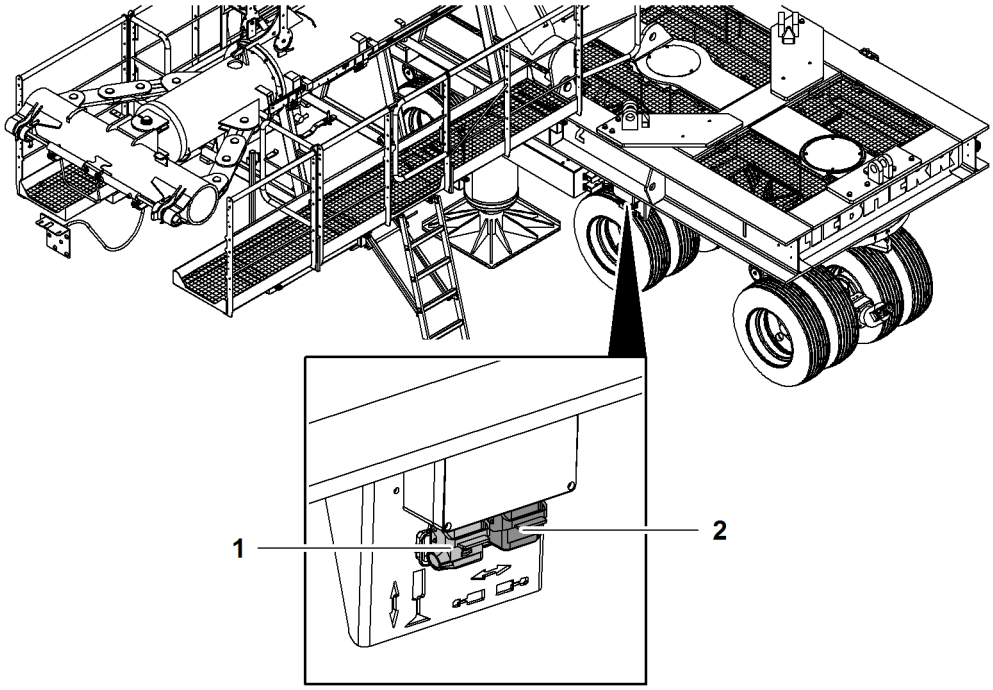

Fig. 3624: Inserting the cable remote control on the counterweight carriage

1 Plug for jack **2** Plug for pin connection cylinder

▶ Insert cable remote control at plug **1** for jack.

DANGER
Asymmetric operation of jacks!
Wheeled counterweight carriage tipping over.

▶ Operate front jack and rear jack synchronously.

▶ Extend front jack and rear jack synchronously with cable remote control until pin connection points of the counterweight carriage and the pin connection points of the basic machine align.

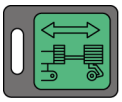

▶ Press the button *Counterweight carriage radius adjustment* on control panel *X26*.

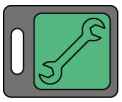

▶ Press and hold the *Counterweight carriage assembly functions* button on control panel *X26*.

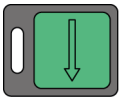

▶ Press the button *Increase radius/support* on control panel *X26* until the pin connection points of the counterweight carriage and the pin connection points of the basic machine align.

▶ Press the button *Counterweight carriage assembly functions* on control panel *X26*.

Pinning the counterweight carriage with the basic machine

Ensure that the following conditions are fulfilled:
❑ Signalman is in constant visual contact or radio contact to machine operator.

LWN/LR.x/V03.01//Auslieferung/2015-06-03/en

copyright by
LIEBHERR

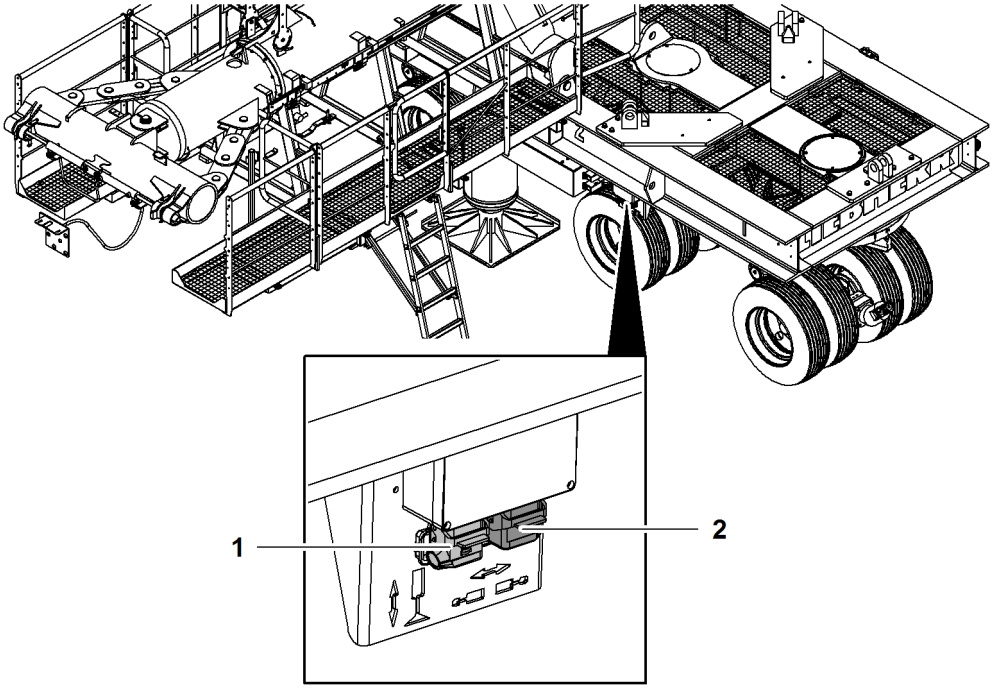

Fig. 3628: Inserting the cable remote control on the counterweight carriage

1 Plug for jack **2** Plug for pin connection cylinder

▶ Insert cable remote control at plug **2** for pin connection cylinder.

LWN/LR.x/V03.01//Auslieferung/2015-06-03/en

copyright by
LIEBHERR

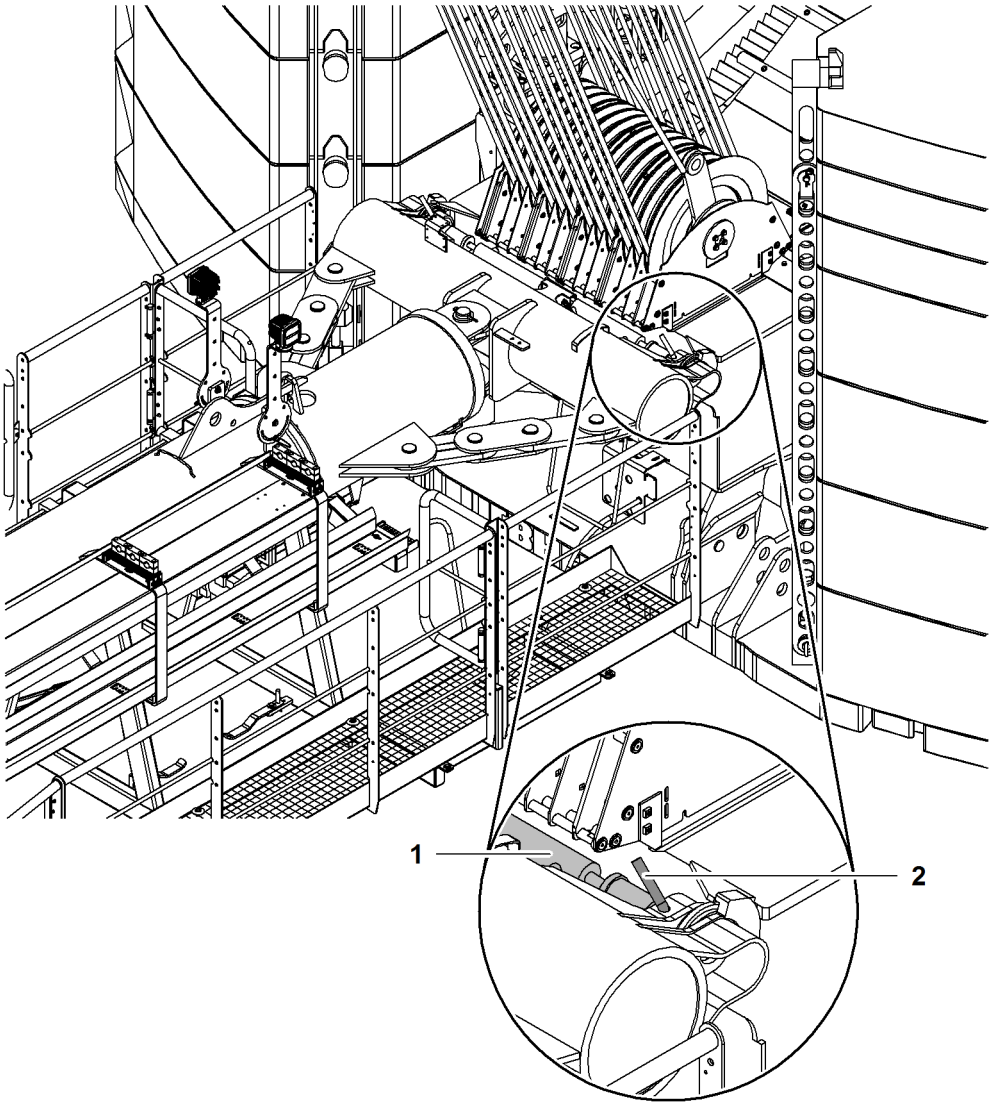

Fig. 3629: Pinning the counterweight carriage with the basic machine

1 Pin connection cylinder (2x) **2** Pin (2x)

▶ Remove pin **2**.

▶ Extend pin connection cylinder **1** with cable remote control.

▶ Secure pin connection cylinder **1** with pins **2**.

Align wheel sets

Ensure that the following conditions are fulfilled:
❑ Counterweight carriage is pinned to basic machine.
❑ Electric lines and hydraulic lines are connected to basic machine.
❑ Height adjusting cylinders of the wheel sets are fully retracted.

LWN/LR.x/V03.01//Auslieferung/2015-06-03/en

copyright by
LIEBHERR

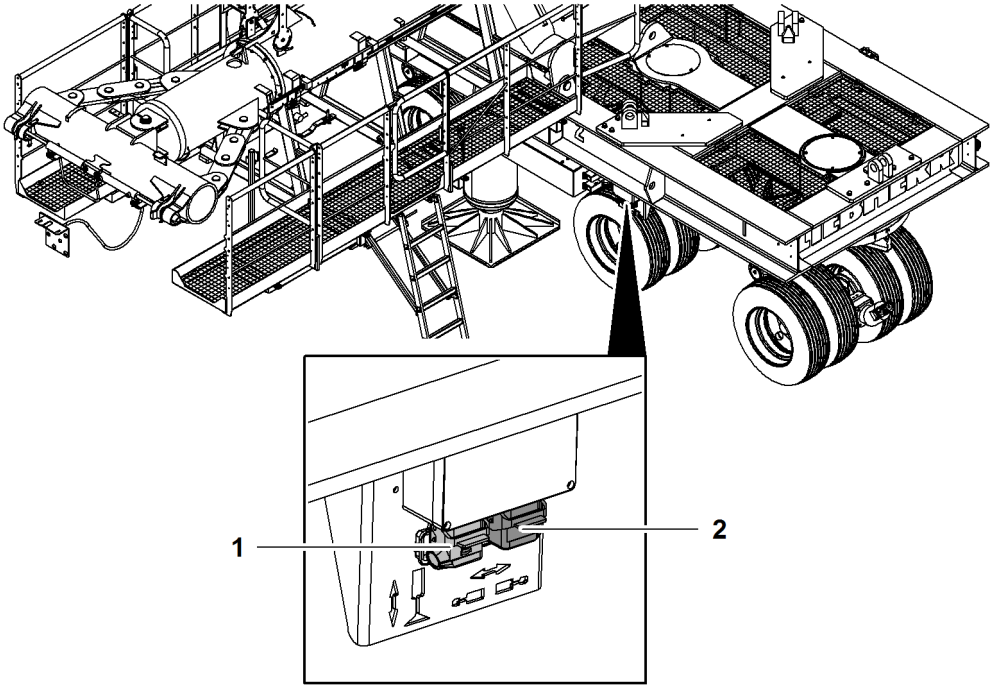

Fig. 3630: Inserting the cable remote control on the counterweight carriage

1 Plug for jack **2** Plug for pin connection cylinder

▶ Insert cable remote control at plug **1** for jack.

▶ Completely extend jacks with cable remote control.
▷ The wheel sets are raised off the ground.

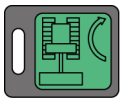

▶ Press the button *Follower mode* on control panel *X26*.

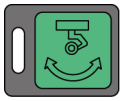

▶ Press the button *Align wheel sets* on control panel *X26*.
▷ The wheel sets are aligned.

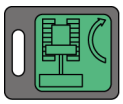

▶ Press the button *Follower mode* on control panel *X26* again.

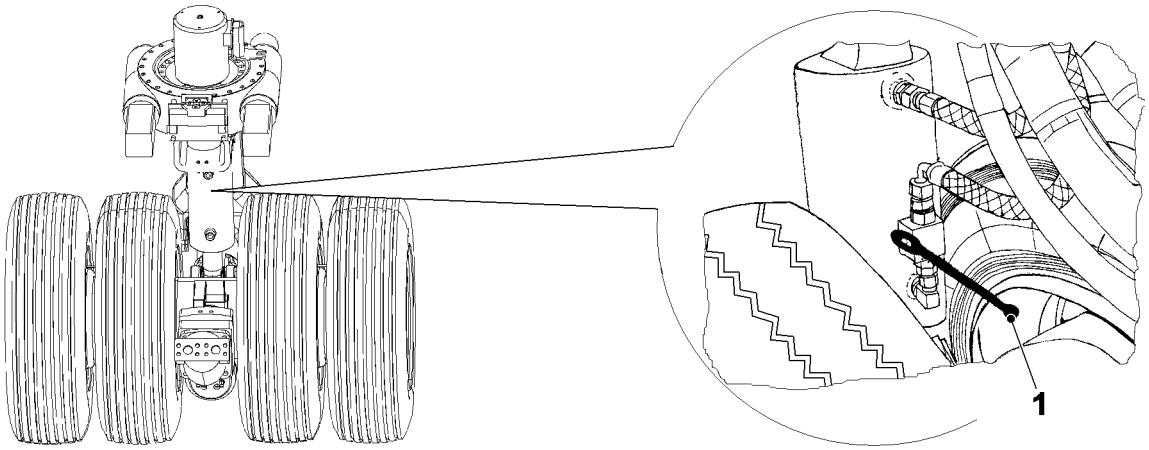

Fig. 3634: Close locking elements of external wheel sets.

1 Locking element (2x)

LWN/LR.x/V03.01//Auslieferung/2015-06-03/en

▶ Close locking elements **1** of the external wheel sets.

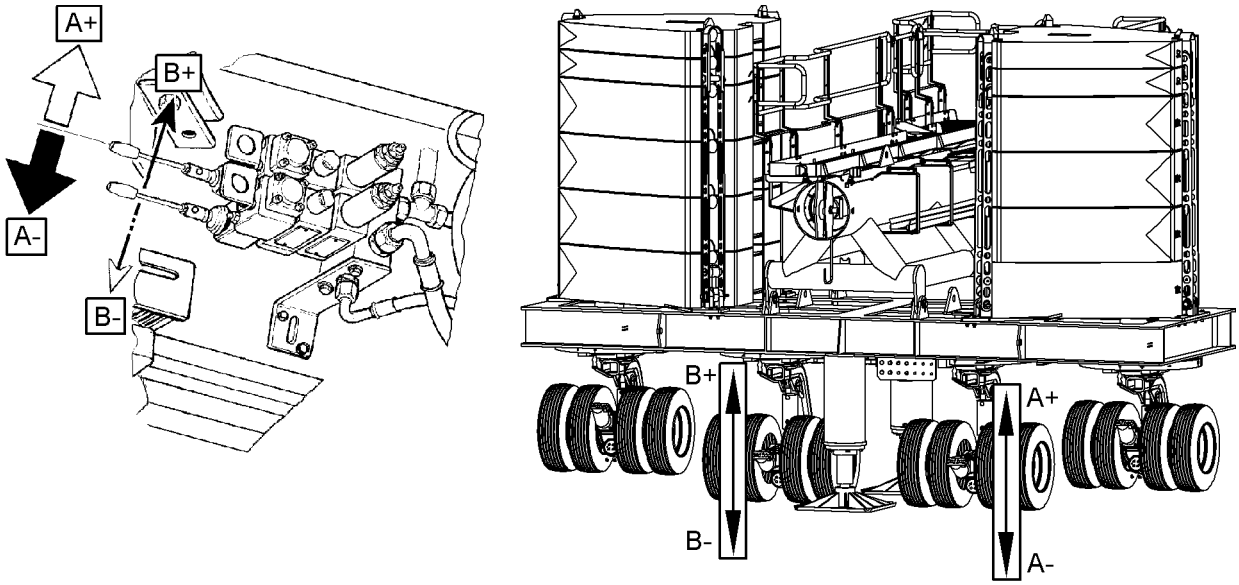

Fig. 3635: Operating the height adjusting cylinder of the inner wheel sets

The control levers of the height adjusting cylinders of the inner wheel sets are located between the jacks.

▶ Fully extend height adjusting cylinders of the inner wheel sets with control lever.

WARNING
Improper opening of locking element!
Wheel sets adapt automatically to height.
Crushing of body parts.

▶ Make sure that no persons are located beneath the wheel sets.

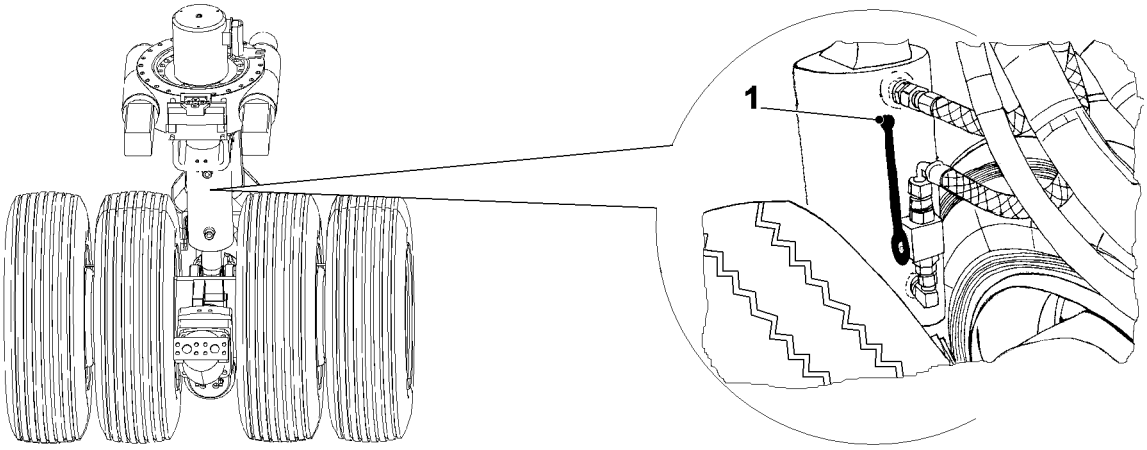

Fig. 3636: Opening the locking elements of the external wheel sets

1 Locking element (2x)

▶ Open the locking elements **1** of the external wheel sets.
▷ External wheel sets adjust to the same height.

▶ Completely retract jacks with cable remote control.

LWN/LR.x/V03.01//Auslieferung/2015-06-03/en

copyright by
LIEBHERR

Undoing counterweight carriages pendant straps from derrick boom

Undoing the temporary attachment of the counterweight carriage pendant straps

The wheeled counterweight carriage pendant straps temporarily attached to the derrick boom earlier must be released before it is erected.

WARNING
Unsecured walking on the boom!
Risk of falling from boom.

▶ A fall arrest system must be worn when working on booms to prevent falling.

▶ Release the temporary attachment of the wheeled counterweight carriage pendant straps on the derrick boom.

▶ Place the fastening materials in temporary storage.

LWN/LR.x/V03.01//Auslieferung/2015-06-03/en

copyright by
LIEBHERR

Attach auxiliary ropes and guide counterweight carriage pendant straps

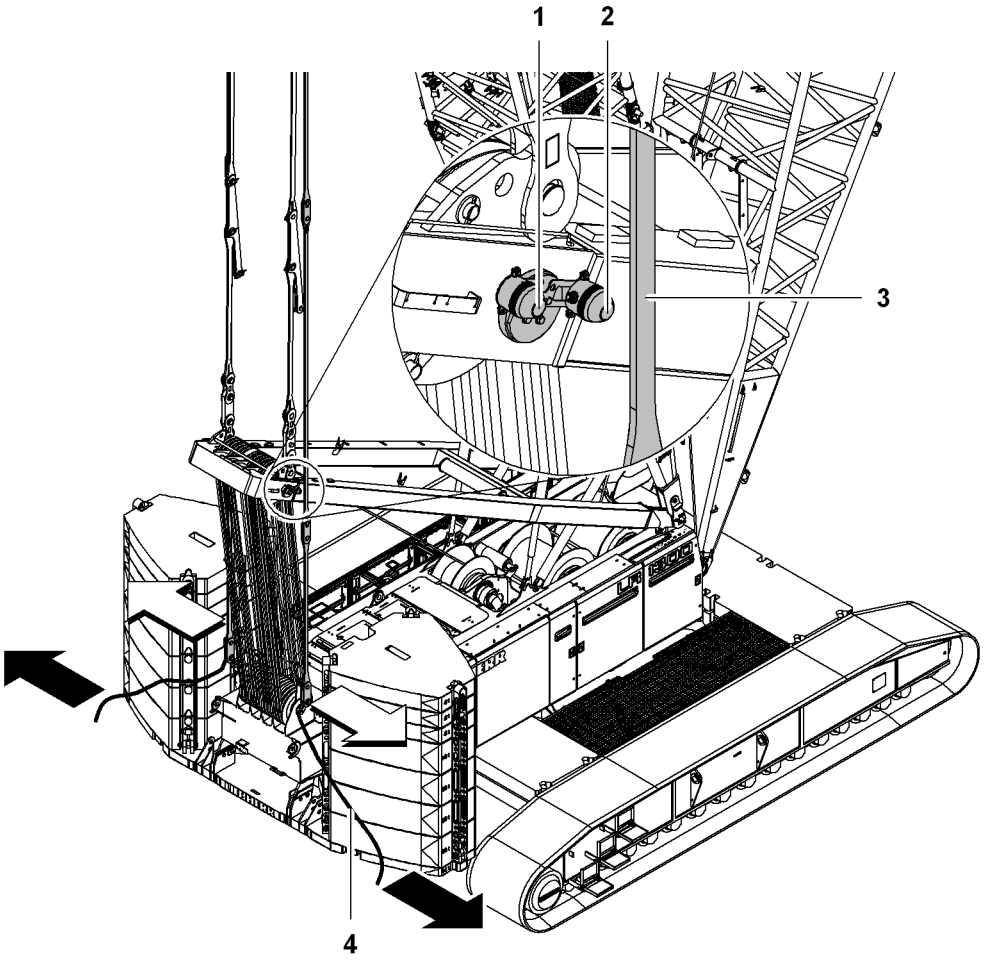

Fig. 3637: Secure auxiliary ropes and guide wheeled counterweight carriage pendant straps

1	Load Moment Limiter lamp	**3**	Wheeled counterweight carriage pendant strap (2x)
2	Flashing light	**4**	Auxiliary rope (2x)

NOTICE
Unguided wheeled counterweight carriage pendant straps **3** while erecting derrick boom!
Damage to flashing light **2** and Load Moment Limiter lamp **1**.

▶ Ensure that wheeled counterweight carriage pendant straps **3** are guided using auxiliary ropes **4**.

▶ Attach an auxiliary rope **4** to each of the wheeled counterweight carriage pendant straps **3** on the left and right.
  ▷ These enable assistants to guide the wheeled counterweight carriage pendant straps when erecting the derrick boom.

LWN/LR.x/V03.01//Auslieferung/2015-06-03/en

copyright by
LIEBHERR

7.11.6 Placing and lashing counterweight slabs

DANGER
Incorrect counterweight!
Machine toppling over.

- ▶ Counterweight slabs must always be stacked equally on both sides.
- ▶ Observe the maximum permissible counterweight weight.
- ▶ Ensure that counterweight slabs are secured with locking aids.

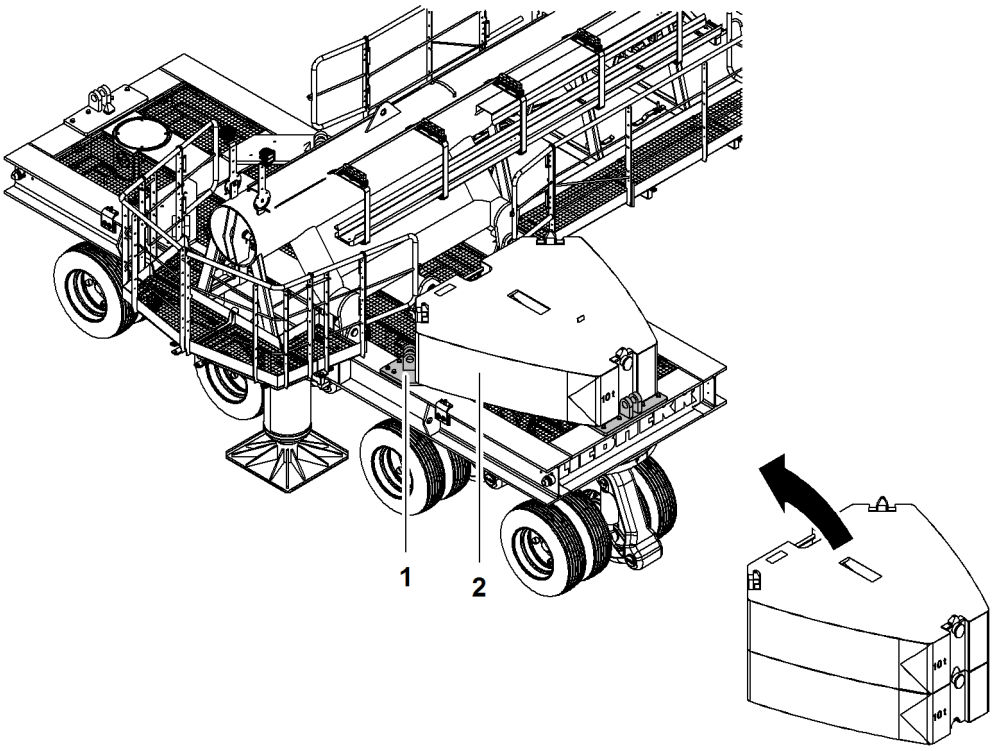

Fig. 3638: Positioning the counterweight slabs

1 Locking aid (6x) **2** Counterweight slabs

- ▶ Place counterweight slabs **2** on locking aids **1** of the counterweight carriage.

WARNING
Counterweight slabs lashed incorrectly!
Dropping counterweight slabs.

- ▶ Only lash counterweight slabs as described below.

LWN/LR.x/V03.01//Auslieferung/2015-06-03/en

copyright by
LIEBHERR

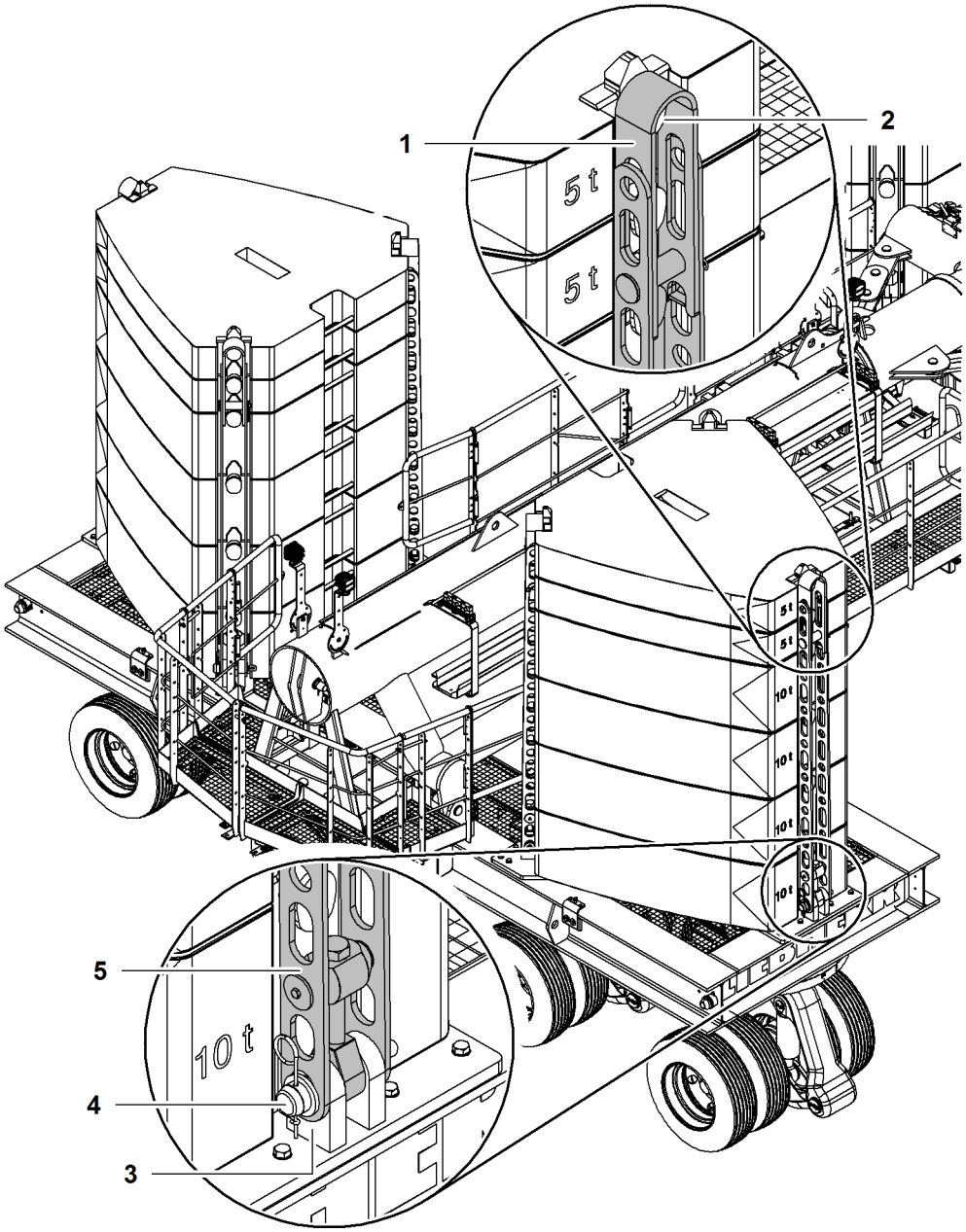

Fig. 3639: Lashing the counterweight slabs

1	Counterweight tie-down shackle	**4**	Pin
2	Rigging point	**5**	Counterweight tie-down shackle
3	Pin connection point of the counterweight carriage		

- ▶ Pin counterweight tie-down shackle **5** with pin connection point **3** of the counterweight carriage.
- ▶ Secure pin **4** with washer and locking spring.
- ▶ Repeat procedure on all pin connection points **3** of the counterweight carriage.
- ▶ Fold up counterweight tie-down shackle **1**.
- ▶ Lift counterweight tie-down shackle **1** over rigging point **2** of counterweight slab.
- ▶ Repeat procedure with all counterweight tie-down shackles **1**.

LWN/LR.x/V03.01//Auslieferung/2015-06-03/en

copyright by
LIEBHERR

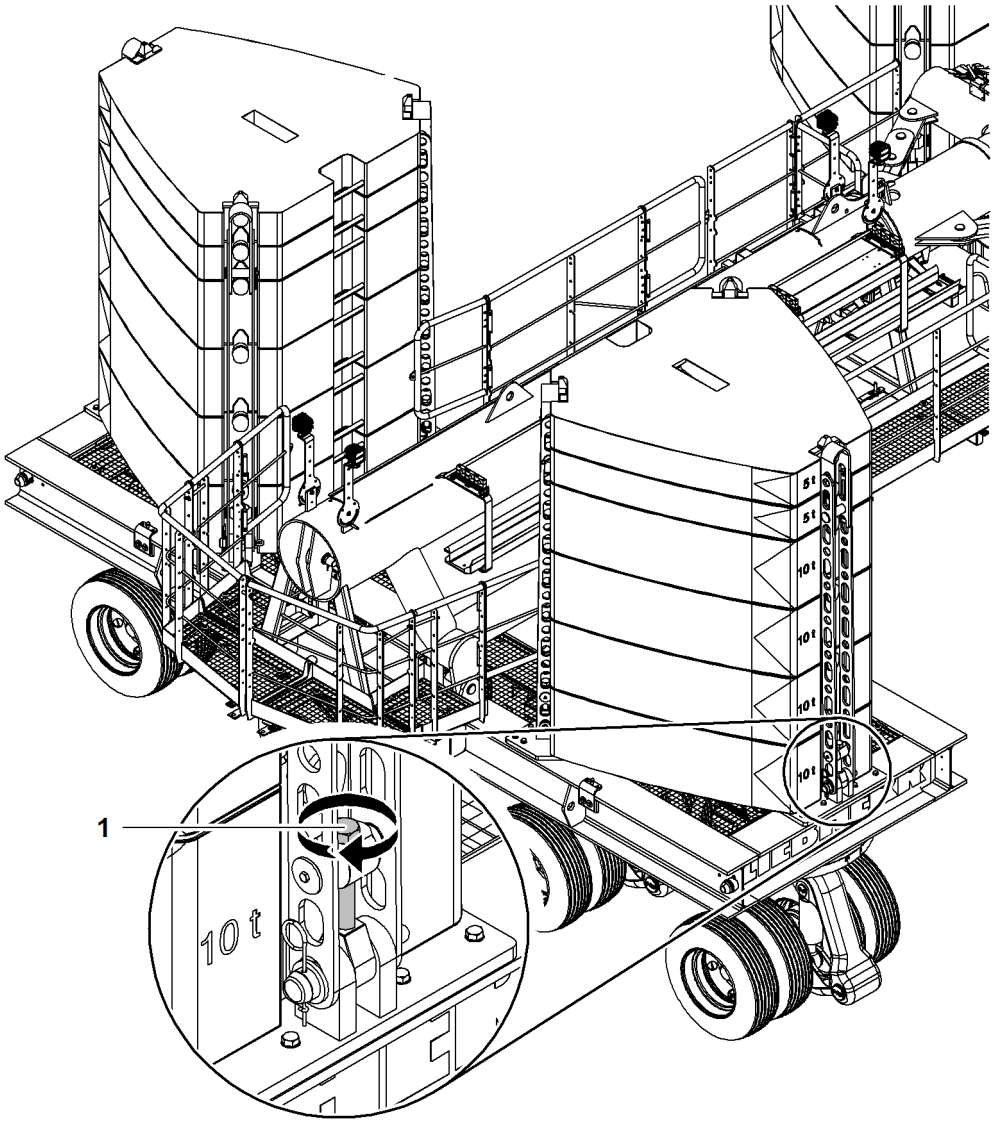

Fig. 3640: Tightening counterweight tie-down screws

1 Screw

▶ Tighten the screw **1** hand-tight using a wrench.

▶ Repeat procedure with all counterweight tie-down shackles.
▷ Counterweight slabs are lashed.

LWN/LR.x/V03.01//Auslieferung/2015-06-03/en

7.12 Erecting the main boom with derrick equipment*

Make sure the following prerequisites are met:
- ❑ Suspended counterweight pendant ropes and/or counterweight carriage pendant straps are no longer tied to derrick boom.
- ❑ One auxiliary rope each is attached to the suspended counterweight pendant ropes and/or counterweight carriage pendant straps.
- ❑ Main boom pendant straps are connected to the derrick rope rigging.

7.12.1 Raising the derrick boom

DANGER
Inappropriate lifting of the derrick boom!
Machine toppling over.

▶ Leave the main boom on the ground while erecting the derrick boom.

▶ Ensure that the main boom pendant straps are not slack.

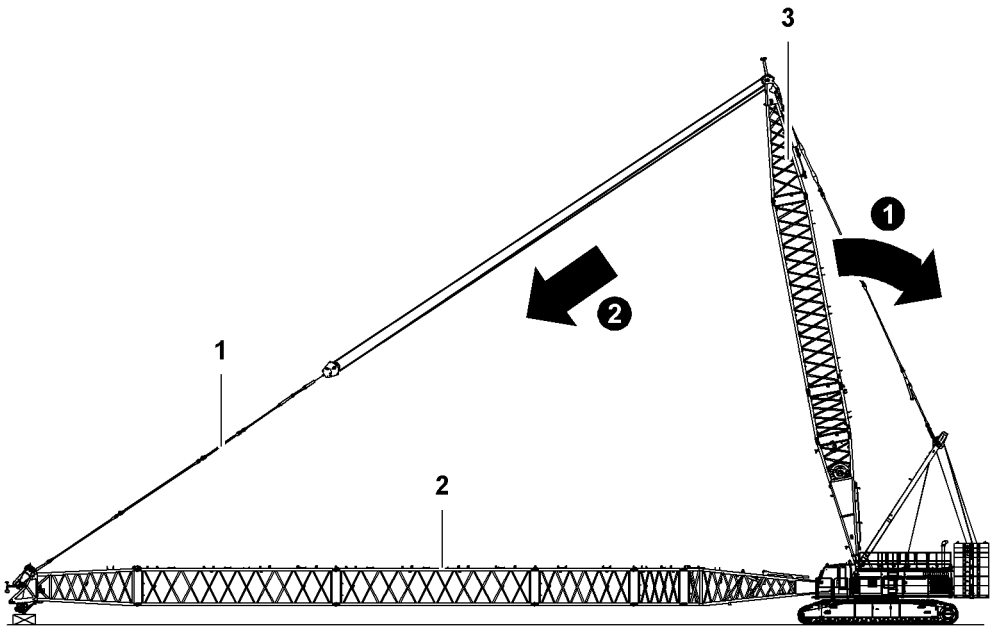

Fig. 3641: Lifting the derrick boom

1 Main boom pendant straps
2 Main boom
3 Derrick boom

▶ Reeve derrick winch until main boom pendant straps **1** are tensioned.

▶ Reeve main boom luffing winch and unwind derrick winch at the same time.
- ▷ Derrick boom **3** lifts.
- ▷ Main boom pendant straps **1** remain pre-tensioned.
- ▷ Main boom **2** stays on the ground.

▶ Erect derrick boom **3** up to 70°.
- ▷ Limit switch triggers.
- ▷ Main boom adjusting winch stops.

LWN/LR.x/V03.01//Auslieferung/2015-06-03/en

copyright by LIEBHERR

▶ Press the *Bypass limit switch* button on control panel *X23*.

NOTICE
Uncontrollable swinging of suspended counterweight pendant ropes or counterweight carriage pendant straps!
Damage to machine.

▶ Two assistants hold the auxiliary ropes of the suspended counterweight pendant ropes or the counterweight carriage pendant straps.

▶ Wind up the boom winch further.

7.12.2 Checking the derrick boom tilting-back supports

Above a derrick boom angle of 90° the derrick boom tilting-back supports swing backward.

CAUTION
Improper checking of the derrick boom tilting-back support!
Risk of crushing limbs.

▶ Do not place any limbs between uppercarriage and derrick boom tilting-back supports.

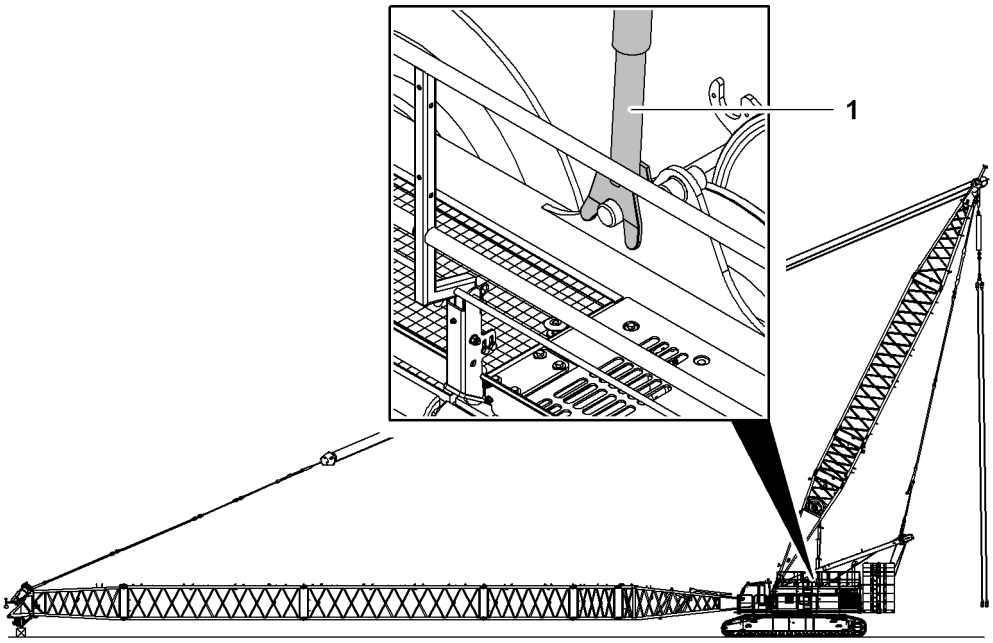

Fig. 3643: Checking the derrick boom tilting-back supports

1 Derrick tilting-back support (2x)

▶ Check forks of derrick boom tilting-back supports **1** for correct fit.

▶ If necessary, guide forks of derrick boom tilting-back supports **1**.

LWN/LR.x/V03.01//Auslieferung/2015-06-03/en

copyright by LIEBHERR

7.12.3 Pinning the suspended counterweight pendant ropes to the counterweight frame

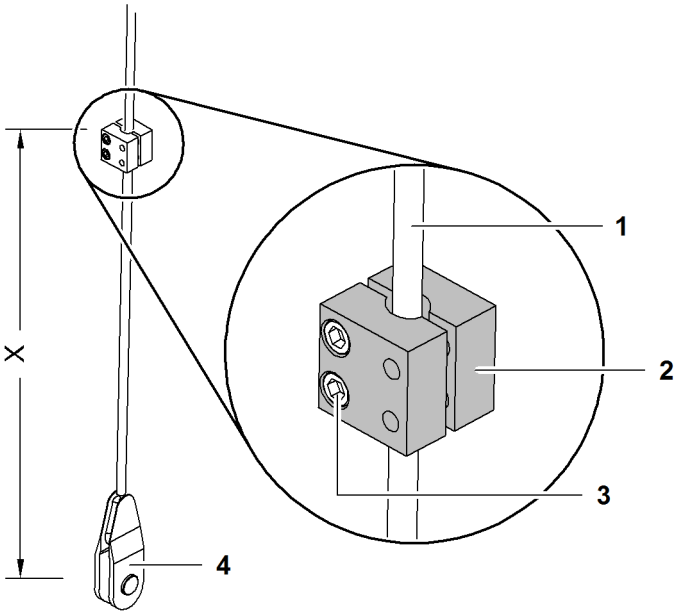

Fig. 3644: Positioning the rope clamps

1	Suspended counterweight pendant rope	**3**	Screws
2	Rope clamp	**4**	Link plate

Machine type	Distance **X**
LR 1005	1929 mm 6‘ 4“ ft-in
LR 1006	1818 mm 6‘ ft-in

Tab. 490: Distance X depending on machine type

The rope clamps **2** must be attached at exactly the same height on the left and right.

- ▶ Attach rope clamp **2** on the front suspended counterweight pendant rope **1**.
- ▶ Position rope clamp **2** so that the top edge of the rope clamp **2** protrudes **X** over the pin connection point of the link plate **4**.
- ▶ Tighten screws **3** of the rope clamp **2**.
  - ▷ Rope clamp **2** is secured against slipping.
- ▶ Repeat procedure on opposite side.

LWN/LR.x/V03.01//Auslieferung/2015-06-03/en

copyright by
LIEBHERR

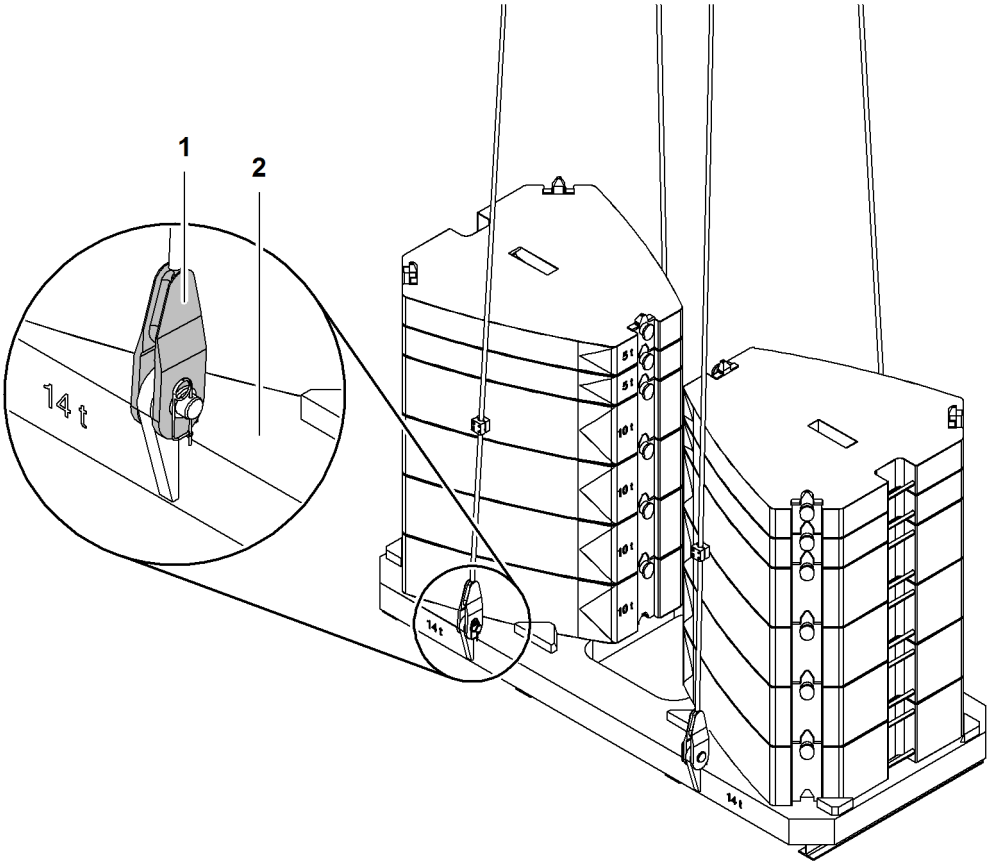

Fig. 3645: Pinning the suspended counterweight pendant ropes to the counterweight frame

1 Suspended counterweight pendant rope

2 Counterweight frame

▶ Pin the suspended counterweight pendant rope **1** to the counterweight frame **2**.

▶ Secure the pins with washers and safety pins.

▶ Repeat procedure on all pin connection points of the counterweight frame **2**.

LWN/LR.x/V03.01//Auslieferung/2015-06-03/en

7.12.4 Pinning the spacer frame with the uppercarriage

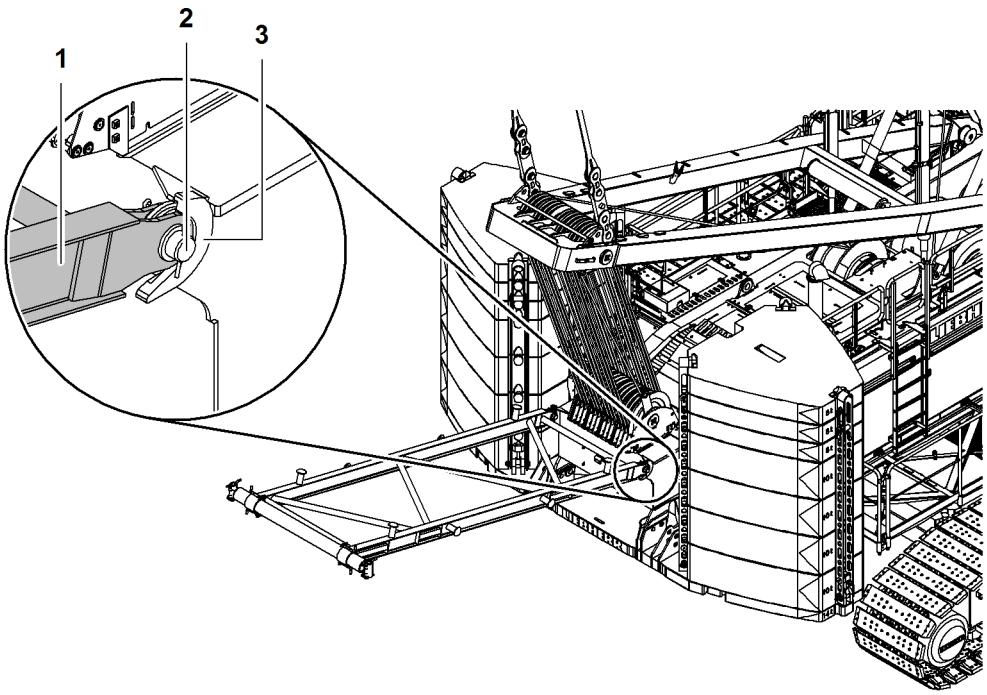

Fig. 3646: Pinning the spacer frame with the uppercarriage

1 Spacer frame
2 Pin (2x)
3 Uppercarriage

The spacer frame **1** can be lifted with the derrick hoist cylinder or with an assist crane.

- ▶ Rig spacer frame **1**.
- ▶ Align spacer frame **1** to pin connection points on uppercarriage **3**.
- ▶ Pin spacer frame **1** with uppercarriage **3**.
- ▶ Secure pins **2** with washers and split pins.

LWN/LR.x/V03.01//Auslieferung/2015-06-03/en

copyright by
LIEBHERR

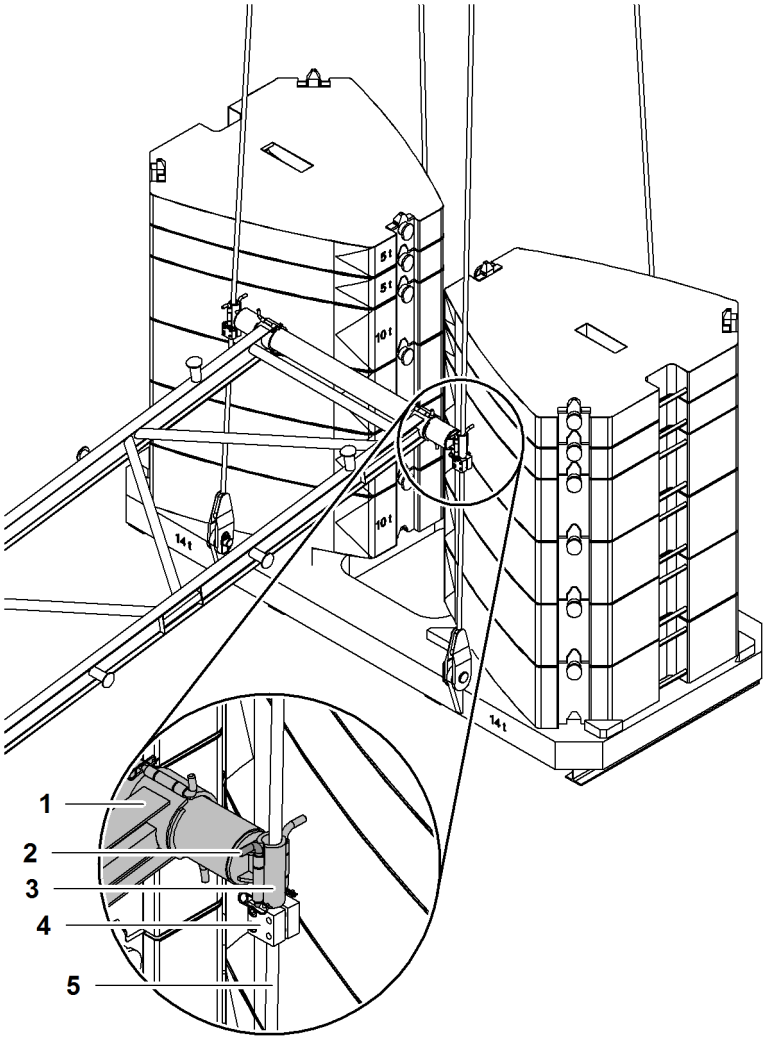

Fig. 3647: Fastening the spacer frame to the suspended counterweight pendant ropes

1 Spacer frame
2 Pin (2x)
3 Rope opening (2x)
4 Rope clamp (2x)
5 Suspended counterweight pendant rope (2x)

▶ Remove pins **2** of rope openings **3**.

▶ Fold open rope openings **3**.

▶ Lift spacer frame **1** and insert rope openings **3** on the front suspended counterweight pendant ropes **5** above the rope clamps **4**.

▶ Close rope openings **3**.

▶ Secure rope openings **3** with pins **2** and locking springs.
  ▷ Spacer frame **1** rests on the rope clamps **4** of the suspended counterweight pendant ropes **5**.

LWN/LR.x/V03.01//Auslieferung/2015-06-03/en

copyright by LIEBHERR

7.12.5 Pinning the counterweight carriage pendant straps to the counterweight carriage

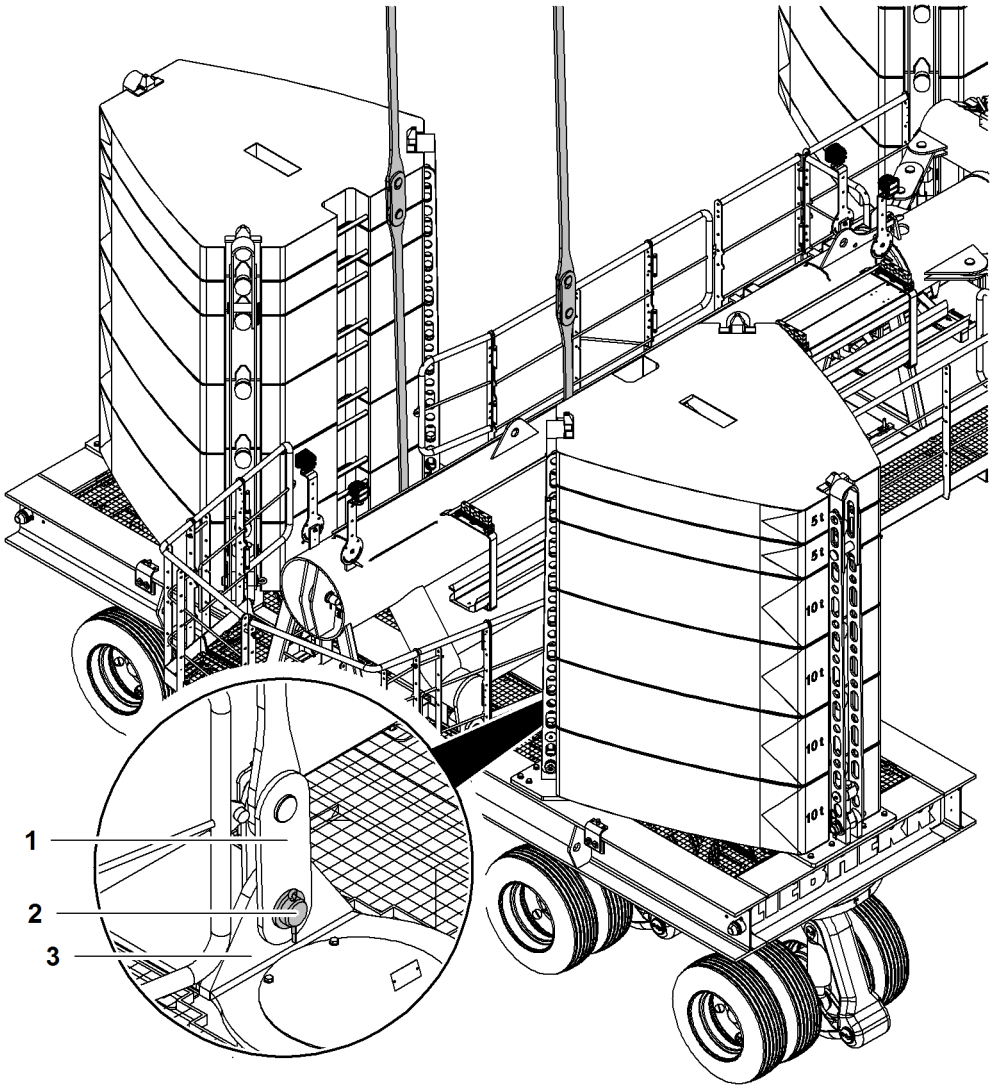

Fig. 3648: Pinning the counterweight carriage pendant straps to the counterweight carriage

1 Counterweight carriage pendant straps
2 Pin
3 Pin connection point on counterweight carriage

▶ Pin counterweight carriage pendant straps **1** with pin connection point on **3** counterweight carriage.

▶ Secure pins **2** with washers and split pins.

▶ Repeat procedure on opposite side.

LWN/LR.x/V03.01//Auslieferung/2015-06-03/en

copyright by
LIEBHERR

7.12.6 Erecting the main boom

DANGER
Erectability chart is not followed!
Machine toppling over.

▶ Only lift main boom when erection is permitted according to the erectability chart.

Ensure that the following conditions are fulfilled:
❑ Boom configuration can be erected with counterweight.
❑ All work on the main boom has been completed.
❑ No loose parts or tools have been left on the main boom.

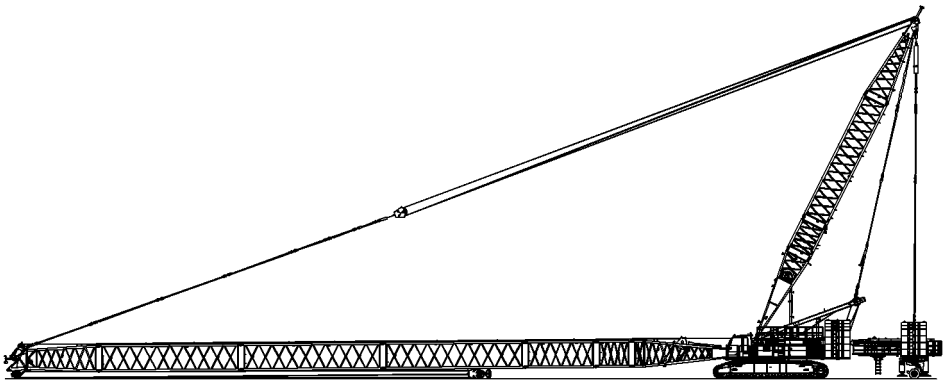

Fig. 3649: Main boom on the ground (illustration of principle)

DANGER
Hoist limit switch bypassed on control panel *X23* in crane mode!
Load breakaway.

▶ Only bypass hoist limit switch on control panel *X23* when assembling or disassembling the machine.

If hoist limit switch weight is on the ground:
▶ Press the *Bypass limit switch* button on control panel *X23*.
▷ Hoist limit switches are bypassed.

▶ Press the *Load moment limiter assembly/self-lock* button on control panel *X23*.

No load chart exists for machine geometry:
▷ Function “load moment limiter assembly” is active.
▷ The LED on the button“Load moment limiter assembly/self-lock” lights up.
▷ Machine functions are enabled unlimited.
▷ Load Moment Limiter lamps flash orange.

▶ Pretension the counterweight on the derrick boom to approx 10 t (22,046 lb).

WARNING
Falling objects!

▶ Any loose parts and tools must be removed from the main boom.

▶ Make sure that no-one is standing in the danger area.

▶ Leave the danger area.

LWN/LR.x/V03.01//Auslieferung/2015-06-03/en

copyright by LIEBHERR

▶ Slowly wind up the derrick winch.
  ▷ The main boom pendant straps are tensioned.

WARNING
Dangerous voltage in boom!
Sudden sideway movement when lifting boom from ground.

▶ Make sure that no-one is standing in the danger area.

▶ Leave the danger area.

▶ Continue winding up the derrick winch.
  ▷ The main boom lifts off the ground.

When the auxiliary jib (36 t (79300 lb)) is attached and lifts off the ground:
▶ Stop derrick winch.

NOTICE
Incorrect limit stop setting for the pendant straps of the auxiliary jib!
Damage to auxiliary jib and pulleys on the main boom head when laying down.

▶ Ensure that the limit stop is set so that the pendant straps of the auxiliary jib fold upwards when laying down.

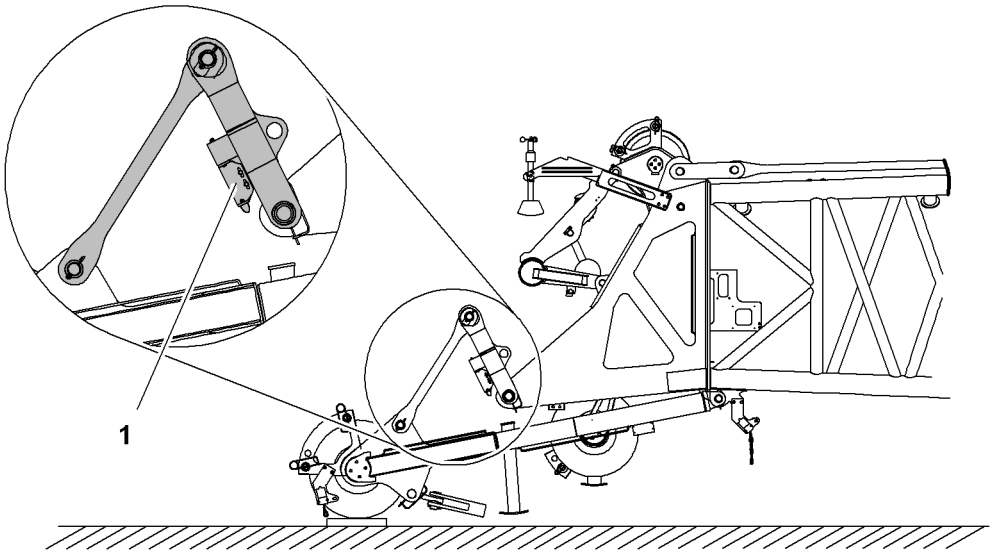

Fig. 3652: Checking the auxiliary jib limit stop

1 Limit stop

▶ Check the limit stop **1**, if necessary lay down the main boom and set the limit stop **1**.

When the limit stop **1** is set correctly:
▶ Continue winding up the derrick winch.
  ▷ Main boom erects itself:

LWN/LR.x/V03.01//Auslieferung/2015-06-03/en

copyright by
LIEBHERR

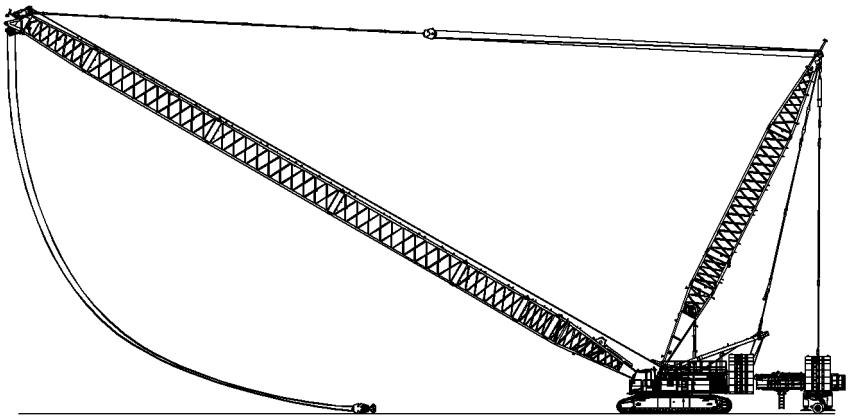

Fig. 3653: Main boom erects itself (illustration of principle)

As soon as there is a load chart for machines geometry:
▷ Deactivate function *load moment limiter assembly*.
▷ The LED on the button“Load moment limiter assembly/self-lock” goes out.
▷ Load moment limiter is active.
▷ Load moment limiter lamps light up according to the current status of the Load Moment Limiter system.

NOTICE
Incorrect erection procedure is followed!
Damage to the equipment.

▶ Do not drag the hook or the pulley block along the ground.

▶ Do not allow any slacking of the rope.

▶ Unwind the rope of winch1/winch2 when necessary.
▷ The hook/pulley block remains on the ground.

When the maximum permitted lifting capacity is at least equal to the weight of the hook and/or pulley block:
▶ Raise the hook/pulley block.

▶ Erect the main boom until it is in the desired position.
▷ Main boom is erected:

LWN/LR.x/V03.01//Auslieferung/2015-06-03/en

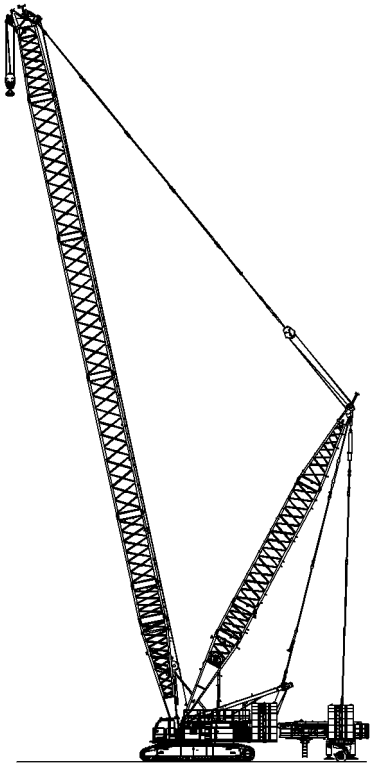

Fig. 3654: Main boom is erected

7.12.7 Switching off assembly mode functions

Ensure that the following conditions are fulfilled:
- ❑ The machine is fully assembled and erected.
- ❑ All limit switches are fitted and operational.

▶ Press the *Assembly functions* switch on control panel *X12*.
- ▷ Assembly mode functions are switched off.
- ▷ The symbol *Assembly functions* disappears on screen.

LWN/LR.x/V03.01//Auslieferung/2015-06-03/en

copyright by LIEBHERR

7.12.8 Checking the main boom limit switch plate for proper adjustment

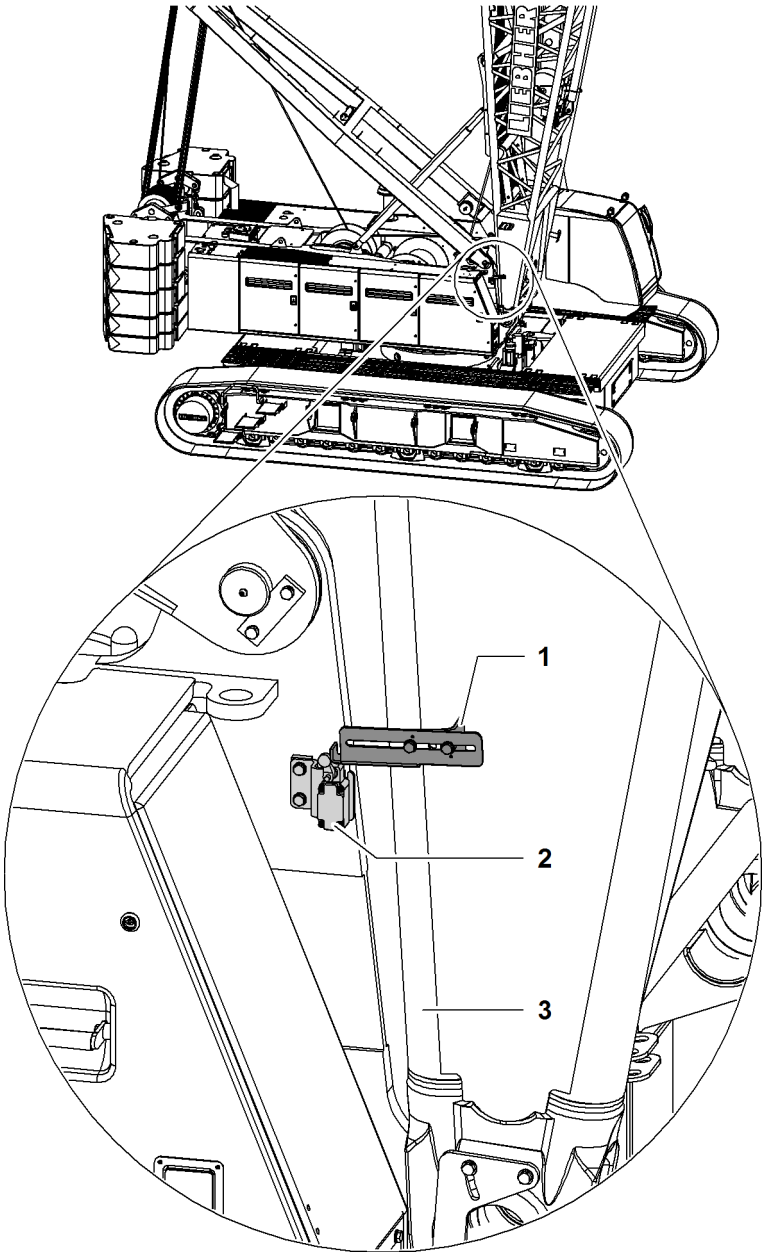

Fig. 3656: Checking the main boom limit switch plate for proper adjustment (illustration of principle)

1 Limit switch plate
2 Limit switch
3 Main boom base section

LWN/LR.x/V03.01//Auslieferung/2015-06-03/en

copyright by LIEBHERR

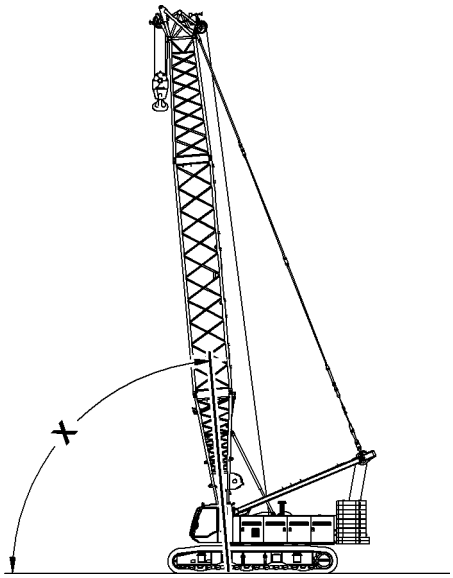

Fig. 3657: Top main boom angle (illustration of principle)

Boom configuration	Angle **X**
Main boom	86°
Main boom + derrick	
Main boom + reducing adapter	
Main boom + fixed jib	88°
Main boom + fixed jib + derrick	
Main boom + luffing jib	
Main boom + luffing jib + derrick	
Main boom + luffing jib + midfall	

Tab. 491: Main boom limit switch plate

NOTICE
Incorrect calibration of the main boom limit switch plate!
Damage to machine.

▶ Make sure that the main boom limit switch plate is properly adjusted.

▶ Erect the main boom until the screen *Operation* shows the angle **X**.
  ▷ Limit switch triggers.
  ▷ Lift main boom is locked.

If the limit switch triggers too early or not at all:
▶ Switch off machine.

▶ Contact Liebherr service department.

LWN/LR.x/V03.01//Auslieferung/2015-06-03/en

copyright by
LIEBHERR

7.13 Main boom 2821 + reducing adapter 2821/2316

System-relevant information for main boom 2821 + reducing adapter 2821/2316:
- Configuration of main boom
  - Installation position of rope guide (type A)
  - Mid-point suspensions installation positions
- Lengths of mid-point suspensions
- Overview of main boom 2821 steel pendant straps + reducing adapter 2821/2316
- Overview of main boom 2821 CF pendant straps + reducing adapter 2821/2316
- Reeving diagrams for one rope across main boom head 2316 (load position1)
- Reeving diagrams for two ropes across main boom head 2316 (load position1)

7.13.1 Configuration of main boom

DANGER
Excess length of main boom!
Structural breakdown.

▶ Check main boom length in load chart for validity.

DANGER
Reducing adapter installed in wrong installation position!
Structural breakdown.

▶ Only install reducing adapter at 43 m (141 ft), 46 m (151 ft) or 55 m (180 ft).

Installation position reducing adapter 43 m (141 ft)	
Main boom length	**Configuration of main boom (symbolic)**
69 m 226 ft	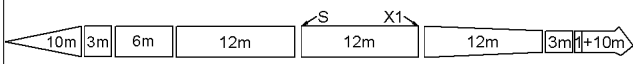
72 m 236 ft	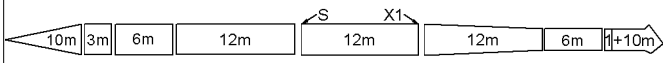
75 m 246 ft	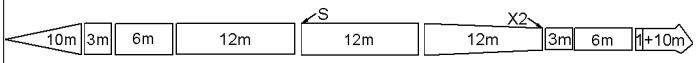
78 m 256 ft	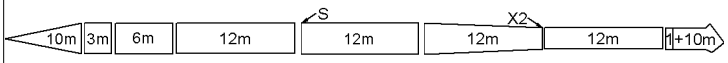
81 m 266 ft	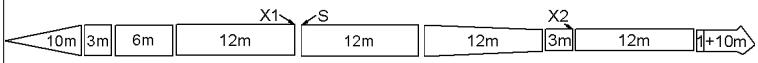
84 m 276 ft	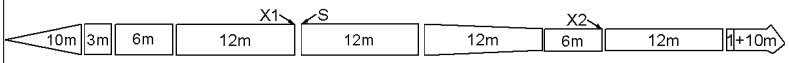
87 m 285 ft	
90 m 295 ft	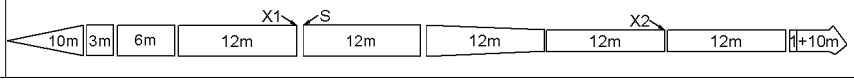

LWN/LR.x/V03.01//Auslieferung/2015-06-03/en

Installation position reducing adapter 43 m (141 ft)	
Main boom length	**Configuration of main boom (symbolic)**
93 m 305 ft	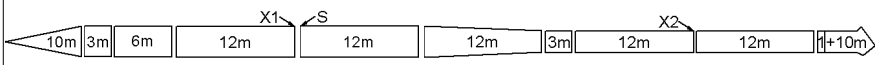
96 m 315 ft	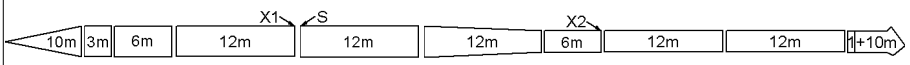
99 m 325 ft	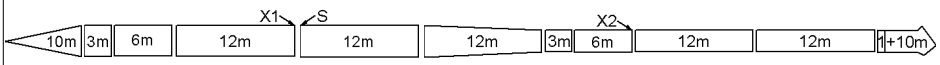
102 m 335 ft	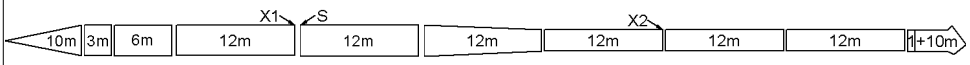
105 m 344 ft	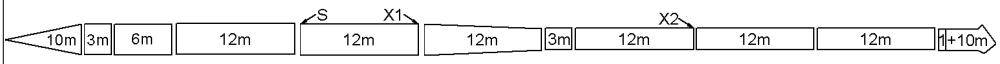
108 m 354 ft	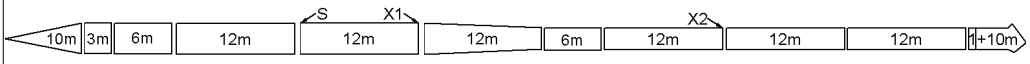
111 m 364 ft	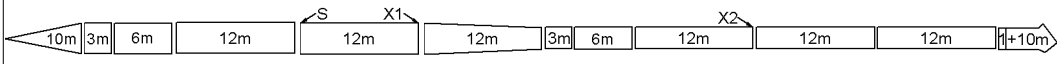
114 m 374 ft	
117 m 384 ft	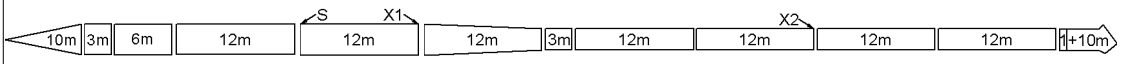
120 m 394 ft	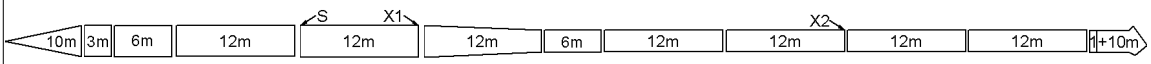
123 m 404 ft	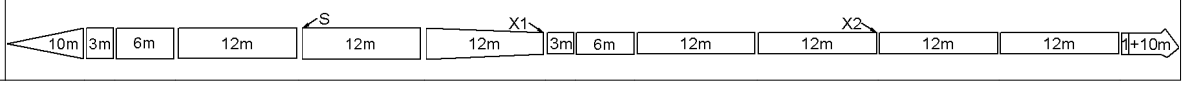

Tab. 492: Configuration of main boom 2821 + reducing adapter 2821/2316 - installation position reducing adapter 43 m (141 ft)

S - Installation position rope guide (type A)

X1 - Installation position mid-point suspension 1

X2 - Installation position mid-point suspension 2

Installation position reducing adapter 46 m (151 ft)	
Main boom length	**Configuration of main boom (symbolic)**
72 m 236 ft	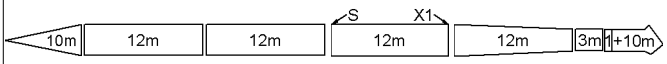
75 m 246 ft	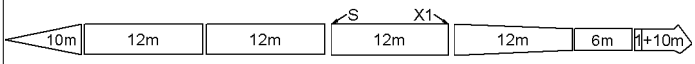
78 m 256 ft	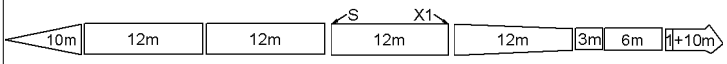
81 m 266 ft	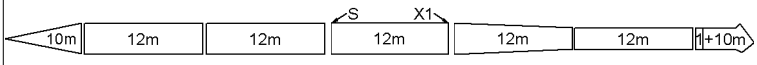
84 m 276 ft	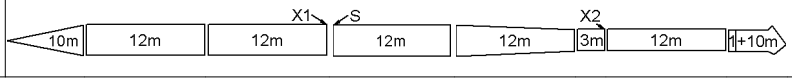

LWN/LR.x/V03.01//Auslieferung/2015-06-03/en

copyright by LIEBHERR

Installation position reducing adapter 46 m (151 ft)	
Main boom length	**Configuration of main boom (symbolic)**
87 m 285 ft	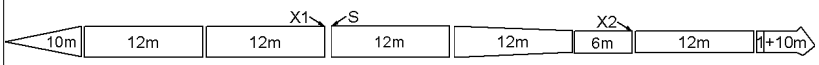
90 m 295 ft	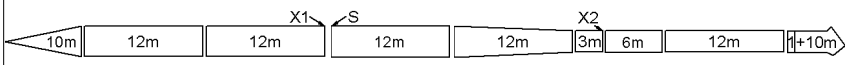
93 m 305 ft	
96 m 315 ft	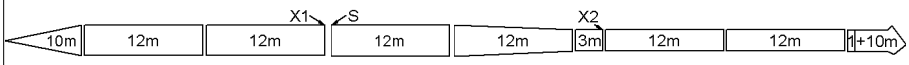
99 m 325 ft	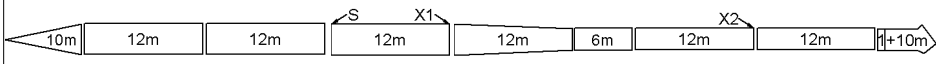
102 m 335 ft	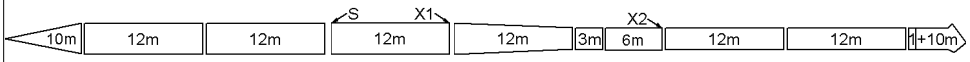
105 m 344 ft	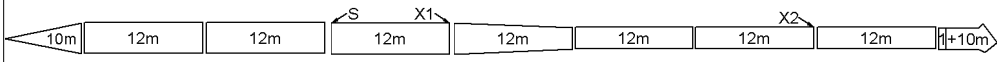
108 m 354 ft	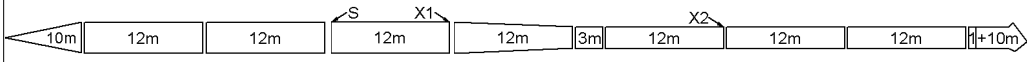
111 m 364 ft	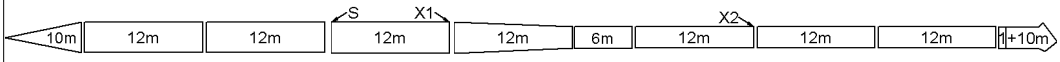
114 m 374 ft	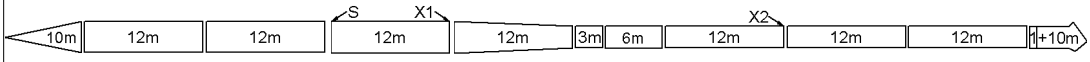
117 m 384 ft	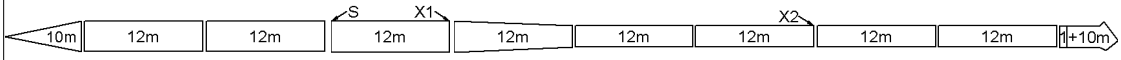
120 m 394 ft	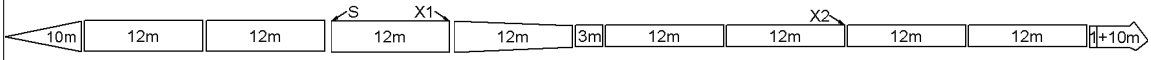
123 m 404 ft	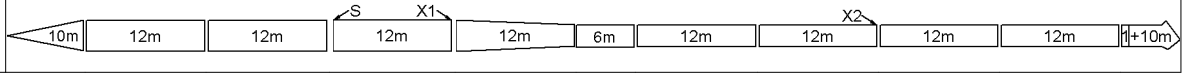

Tab. 493: Configuration of main boom 2821 + reducing adapter 2821/2316 - installation position reducing adapter 46 m (151 ft)

S - Installation position rope guide (type A)

X1 - Installation position mid-point suspension 1

X2 - Installation position mid-point suspension 2

Installation position reducing adapter 55 m (180 ft)	
Main boom length	**Configuration of main boom (symbolic)**
81 m 266 ft	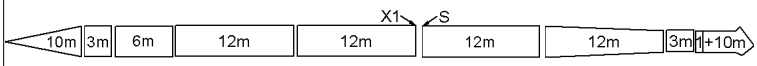
84 m 276 ft	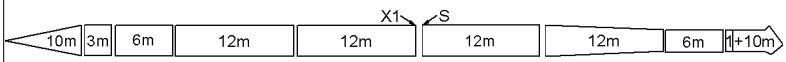
87 m 285 ft	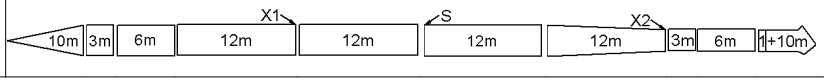

LWN/LR.x/V03.01//Auslieferung/2015-06-03/en

copyright by LIEBHERR

Installation position reducing adapter 55 m (180 ft)	
Main boom length	**Configuration of main boom (symbolic)**
90 m 295 ft	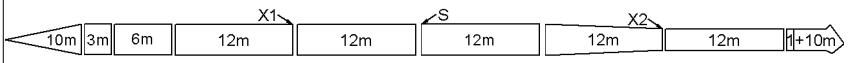
93 m 305 ft	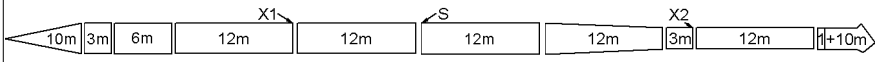
96 m 315 ft	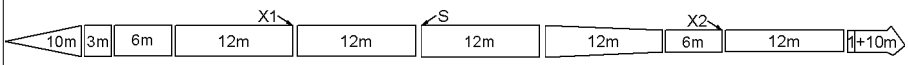
99 m 325 ft	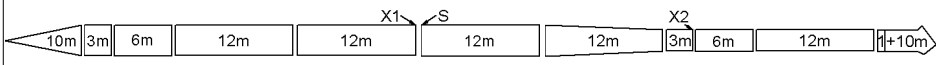
102 m 335 ft	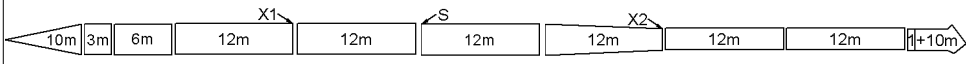
105 m 344 ft	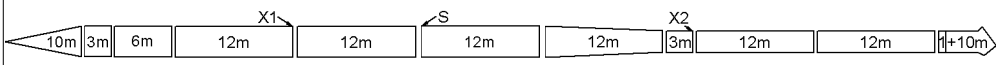
108 m 354 ft	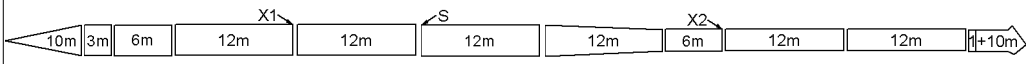
111 m 364 ft	
114 m 374 ft	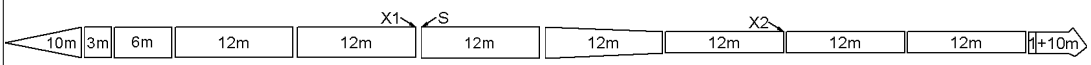
117 m 384 ft	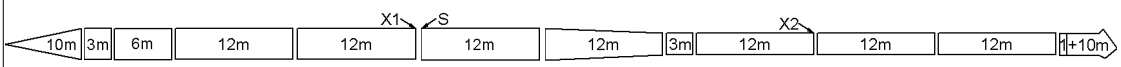
120 m 394 ft	

Tab. 494: Configuration of main boom 2821 + reducing adapter 2821/2316 - installation position reducing adapter 55 m (180 ft)

S - Installation position rope guide (type A)

X1 - Installation position mid-point suspension 1

X2 - Installation position mid-point suspension 2

7.13.2 Lengths of mid-point suspensions

Assembly position of the reducing piece 43 m (141 ft)		
Main boom length	**Backstay pendant (X1)**	**Backstay shackle (X2)**
	Rope length	**Shackle length**
69 m 226 ft	1.3 m 4‘ 3“ ft-in	
72 m 236 ft	1.6 m 5‘ 3“ ft-in	
75 m 246 ft		0.74 m 2‘ 5“ ft-in = 0.54 m (1‘ 9“ ft-in) + 0.2 m (7.87“ in)

copyright by LIEBHERR

Assembly position of the reducing piece 43 m (141 ft)		
Main boom length	Backstay pendant (X1)	Backstay shackle (X2)
	Rope length	Shackle length
78 m 256 ft		0.93 m 3‘ 1“ ft-in = 0.73 m (2‘ 5“ ft-in) + 0.2 m (7.87“ in)
81 m 266 ft	3.4 m 11‘ 2“ ft-in = 2.1 m (6‘ 11“ ft-in) + 1.3 m (4‘ 3“ ft-in)	0.93 m 3‘ 1“ ft-in = 0.73 m (2‘ 5“ ft-in) + 0.2 m (7.87“ in)
84 m 276 ft	3.7 m 12‘ 2“ ft-in = 2.6 m (8‘ 6“ ft-in) + 1.1 m (3‘ 7“ ft-in)	0.93 m 3‘ 1“ ft-in = 0.73 m (2‘ 5“ ft-in) + 0.2 m (7.87“ in)
87 m 285 ft	3.7 m 12‘ 2“ ft-in = 2.6 m (8‘ 6“ ft-in) + 1.1 m (3‘ 7“ ft-in)	1.15 m 3‘ 9“ ft-in = 0.95 m (3‘ 1“ ft-in) + 0.2 m (7.87“ in)
90 m 295 ft	3.7 m 12‘ 2“ ft-in = 2.6 m (8‘ 6“ ft-in) + 1.1 m (3‘ 7“ ft-in)	0.74 m 2‘ 5“ ft-in = 0.54 m (1‘ 9“ ft-in) + 0.2 m (7.87“ in)
93 m 305 ft	3.7 m 12‘ 2“ ft-in = 2.6 m (8‘ 6“ ft-in) + 1.1 m (3‘ 7“ ft-in)	0.74 m 2‘ 5“ ft-in = 0.54 m (1‘ 9“ ft-in) + 0.2 m (7.87“ in)
96 m 315 ft	2.7 m 8‘ 10“ ft-in = 1.6 m (5‘ 3“ ft-in) + 1.1 m (3‘ 7“ ft-in)	0.74 m 2‘ 5“ ft-in = 0.54 m (1‘ 9“ ft-in) + 0.2 m (7.87“ in)
99 m 325 ft	3.2 m 10‘ 6“ ft-in = 2.1 m (6‘ 11“ ft-in) + 1.1 m (3‘ 7“ ft-in)	1.15 m 3‘ 9“ ft-in = 0.95 m (3‘ 1“ ft-in) + 0.2 m (7.87“ in)
102 m 335 ft	3.9 m 12‘ 10“ ft-in = 2.6 m (8‘ 6“ ft-in) + 1.3 m (4‘ 3“ ft-in)	1.15 m 3‘ 9“ ft-in = 0.95 m (3‘ 1“ ft-in) + 0.2 m (7.87“ in)
105 m 344 ft	3.2 m 10‘ 6“ ft-in = 2.1 m (6‘ 11“ ft-in) + 1.1 m (3‘ 7“ ft-in)	1.15 m 3‘ 9“ ft-in = 0.95 m (3‘ 1“ ft-in) + 0.2 m (7.87“ in)

LWN/LR.x/V03.01//Auslieferung/2015-06-03/en

copyright by
LIEBHERR

Assembly position of the reducing piece 43 m (141 ft)		
Main boom length	Backstay pendant (X1)	Backstay shackle (X2)
	Rope length	Shackle length
108 m 354 ft	3.2 m 10‘ 6“ ft-in = 2.1 m (6‘ 11“ ft-in) + 1.1 m (3‘ 7“ ft-in)	1.15 m 3‘ 9“ ft-in = 0.95 m (3‘ 1“ ft-in) + 0.2 m (7.87“ in)
111 m 364 ft	3.2 m 10‘ 6“ ft-in = 2.1 m (6‘ 11“ ft-in) + 1.1 m (3‘ 7“ ft-in)	1.15 m 3‘ 9“ ft-in = 0.95 m (3‘ 1“ ft-in) + 0.2 m (7.87“ in)
114 m 374 ft	4.1 m 13‘ 5“ ft-in = 3.0 m (9‘ 10“ ft-in) + 1.1 m (3‘ 7“ ft-in)	1.6 m 5‘ 3“ ft-in A)
117 m 384 ft	3.4 m 11‘ 2“ ft-in = 2.1 m (6‘ 11“ ft-in) + 1.3 m (4‘ 3“ ft-in)	0.93 m 3‘ 1“ ft-in = 0.73 m (2‘ 5“ ft-in) + 0.2 m (7.87“ in)
120 m 394 ft	3.4 m 11‘ 2“ ft-in = 2.1 m (6‘ 11“ ft-in) + 1.3 m (4‘ 3“ ft-in)	0.93 m 3‘ 1“ ft-in = 0.73 m (2‘ 5“ ft-in) + 0.2 m (7.87“ in)
123 m 404 ft	2.9 m 9‘ 6“ ft-in = 1.6 m (5‘ 3“ ft-in) + 1.3 m (4‘ 3“ ft-in)	0.74 m 2‘ 5“ ft-in = 0.54 m (1‘ 9“ ft-in) + 0.2 m (7.87“ in)

Tab. 495: Lengths of mid-point suspensions - 2821 main boom + 2821/2316 reducing piece - assembly position of reducing piece 43 m (141 ft)

A) Backstay pendant

Assembly position of the reducing piece 46 m (151 ft)		
Main boom length	Backstay pendant (X1)	Backstay shackle (X2)
	Rope length	Shackle length
72 m 236 ft	1.3 m 4‘ 3“ ft-in	
75 m 246 ft	1.6 m 5‘ 3“ ft-in	
78 m 256 ft	1.6 m 5‘ 3“ ft-in	
81 m 266 ft	1.6 m 5‘ 3“ ft-in	

LWN/LR.x/V03.01//Auslieferung/2015-06-03/en

copyright by LIEBHERR

Assembly position of the reducing piece 46 m (151 ft)		
Main boom length	Backstay pendant (X1)	Backstay shackle (X2)
	Rope length	Shackle length
84 m 276 ft	3.4 m 11‘ 2“ ft-in = 2.1 m (6‘ 11“ ft-in) + 1.3 m (4‘ 3“ ft-in)	0.93 m 3‘ 1“ ft-in = 0.73 m (2‘ 5“ ft-in) + 0.2 m (7.87“ in)
87 m 285 ft	3.2 m 10‘ 6“ ft-in = 2.1 m (6‘ 11“ ft-in) + 1.1 m (3‘ 7“ ft-in)	0.74 m 2‘ 5“ ft-in = 0.54 m (1‘ 9“ ft-in) + 0.2 m (7.87“ in)
90 m 295 ft	3.7 m 12‘ 2“ ft-in = 2.6 m (8‘ 6“ ft-in) + 1.1 m (3‘ 7“ ft-in)	1.15 m 3‘ 9“ ft-in = 0.95 m (3‘ 1“ ft-in) + 0.2 m (7.87“ in)
93 m 305 ft	3.7 m 12‘ 2“ ft-in = 2.6 m (8‘ 6“ ft-in) + 1.1 m (3‘ 7“ ft-in)	0.74 m 2‘ 5“ ft-in = 0.54 m (1‘ 9“ ft-in) + 0.2 m (7.87“ in)
96 m 315 ft	3.7 m 12‘ 2“ ft-in = 2.6 m (8‘ 6“ ft-in) + 1.1 m (3‘ 7“ ft-in)	1.3 m 4‘ 3“ ft-in A)
99 m 325 ft	2.7 m 8‘ 10“ ft-in = 1.6 m (5‘ 3“ ft-in) + 1.1 m (3‘ 7“ ft-in)	0.62 m 2‘ ft-in = 0.42 m (1‘ 5“ ft-in) + 0.2 m (7.87“ in)
102 m 335 ft	2.7 m 8‘ 10“ ft-in = 1.6 m (5‘ 3“ ft-in) + 1.1 m (3‘ 7“ ft-in)	1.15 m 3‘ 9“ ft-in = 0.95 m (3‘ 1“ ft-in) + 0.2 m (7.87“ in)
105 m 344 ft	3 m 9‘ 10“ ft-in	0.62 m 2‘ ft-in = 0.42 m (1‘ 5“ ft-in) + 0.2 m (7.87“ in)
108 m 354 ft	3.2 m 10‘ 6“ ft-in = 2.1 m (6‘ 11“ ft-in) + 1.1 m (3‘ 7“ ft-in)	1.15 m 3‘ 9“ ft-in = 0.95 m (3‘ 1“ ft-in) + 0.2 m (7.87“ in)
111 m 364 ft	3.2 m 10‘ 6“ ft-in = 2.1 m (6‘ 11“ ft-in) + 1.1 m (3‘ 7“ ft-in)	1.15 m 3‘ 9“ ft-in = 0.95 m (3‘ 1“ ft-in) + 0.2 m (7.87“ in)

LWN/LR.x/V03.01//Auslieferung/2015-06-03/en

copyright by
LIEBHERR

Assembly position of the reducing piece 46 m (151 ft)		
Main boom length	Backstay pendant (X1)	Backstay shackle (X2)
	Rope length	Shackle length
114 m 374 ft	3.2 m 10‘ 6“ ft-in = 2.1 m (6‘ 11“ ft-in) + 1.1 m (3‘ 7“ ft-in)	0.93 m 3‘ 1“ ft-in = 0.73 m (2‘ 5“ ft-in) + 0.2 m (7.87“ in)
117 m 384 ft	3.4 m 11‘ 2“ ft-in = 2.1 m (6‘ 11“ ft-in) + 1.3 m (4‘ 3“ ft-in)	0.93 m 3‘ 1“ ft-in = 0.73 m (2‘ 5“ ft-in) + 0.2 m (7.87“ in)
120 m 394 ft	3.2 m 10‘ 6“ ft-in = 2.1 m (6‘ 11“ ft-in) + 1.1 m (3‘ 7“ ft-in)	0.74 m 2‘ 5“ ft-in = 0.54 m (1‘ 9“ ft-in) + 0.2 m (7.87“ in)
123 m 404 ft	3.2 m 10‘ 6“ ft-in = 2.1 m (6‘ 11“ ft-in) + 1.1 m (3‘ 7“ ft-in)	0.74 m 2‘ 5“ ft-in = 0.54 m (1‘ 9“ ft-in) + 0.2 m (7.87“ in)

Tab. 496: Lengths of mid-point suspensions - 2821 main boom + 2821/2316 reducing piece - assembly position of reducing piece 46 m (151 ft)

A) Backstay pendant

Assembly position of the reducing piece 55 m (180 ft)		
Main boom length	Backstay pendant (X1)	Backstay shackle (X2)
	Rope length	Shackle length
81 m 266 ft	2.1 m 6‘ 11“ ft-in	
84 m 276 ft	2.6 m 8‘ 6“ ft-in	
87 m 285 ft	3.7 m 12‘ 2“ ft-in = 2.6 m (8‘ 6“ ft-in) + 1.1 m (3‘ 7“ ft-in)	0.62 m 2‘ ft-in = 0.42 m (1‘ 5“ ft-in) + 0.2 m (7.87“ in)
90 m 295 ft	3.7 m 12‘ 2“ ft-in = 2.6 m (8‘ 6“ ft-in) + 1.1 m (3‘ 7“ ft-in)	0.74 m 2‘ 5“ ft-in = 0.54 m (1‘ 9“ ft-in) + 0.2 m (7.87“ in)
93 m 305 ft	3.7 m 12‘ 2“ ft-in = 2.6 m (8‘ 6“ ft-in) + 1.1 m (3‘ 7“ ft-in)	0.74 m 2‘ 5“ ft-in = 0.54 m (1‘ 9“ ft-in) + 0.2 m (7.87“ in)

LWN/LR.x/V03.01//Auslieferung/2015-06-03/en

copyright by
LIEBHERR

Assembly position of the reducing piece 55 m (180 ft)		
Main boom length	Backstay pendant (X1)	Backstay shackle (X2)
	Rope length	Shackle length
96 m 315 ft	4.1 m 13‘ 5“ ft-in = 3.0 m (9‘ 10“ ft-in) + 1.1 m (3‘ 7“ ft-in)	0.74 m 2‘ 5“ ft-in = 0.54 m (1‘ 9“ ft-in) + 0.2 m (7.87“ in)
99 m 325 ft	3.2 m 10‘ 6“ ft-in = 2.1 m (6‘ 11“ ft-in) + 1.1 m (3‘ 7“ ft-in)	0.93 m 3‘ 1“ ft-in = 0.73 m (2‘ 5“ ft-in) + 0.2 m (7.87“ in)
102 m 335 ft	4.1 m 13‘ 5“ ft-in = 3.0 m (9‘ 10“ ft-in) + 1.1 m (3‘ 7“ ft-in)	1.15 m 3‘ 9“ ft-in = 0.95 m (3‘ 1“ ft-in) + 0.2 m (7.87“ in)
105 m 344 ft	4.2 m 13‘ 9“ ft-in = 2.1 m (6‘ 11“ ft-in) + 2.1 m (6‘ 11“ ft-in)	1.15 m 3‘ 9“ ft-in = 0.95 m (3‘ 1“ ft-in) + 0.2 m (7.87“ in)
108 m 354 ft	4.2 m 13‘ 9“ ft-in = 2.1 m (6‘ 11“ ft-in) + 2.1 m (6‘ 11“ ft-in)	1.15 m 3‘ 9“ ft-in = 0.95 m (3‘ 1“ ft-in) + 0.2 m (7.87“ in)
111 m 364 ft	3.2 m 10‘ 6“ ft-in = 2.1 m (6‘ 11“ ft-in) + 1.1 m (3‘ 7“ ft-in)	1.15 m 3‘ 9“ ft-in = 0.95 m (3‘ 1“ ft-in) + 0.2 m (7.87“ in)
114 m 374 ft	3.2 m 10‘ 6“ ft-in = 2.1 m (6‘ 11“ ft-in) + 1.1 m (3‘ 7“ ft-in)	0.93 m 3‘ 1“ ft-in = 0.73 m (2‘ 5“ ft-in) + 0.2 m (7.87“ in)
117 m 384 ft	3.4 m 11‘ 2“ ft-in = 2.1 m (6‘ 11“ ft-in) + 1.3 m (4‘ 3“ ft-in)	0.93 m 3‘ 1“ ft-in = 0.73 m (2‘ 5“ ft-in) + 0.2 m (7.87“ in)
120 m 394 ft	3.4 m 11‘ 2“ ft-in = 2.1 m (6‘ 11“ ft-in) + 1.3 m (4‘ 3“ ft-in)	0.93 m 3‘ 1“ ft-in = 0.73 m (2‘ 5“ ft-in) + 0.2 m (7.87“ in)

Tab. 497: Lengths of mid-point suspensions - 2821 main boom + 2821/2316 reducing piece - assembly position of reducing piece 55 m (180 ft)

LWN/LR.x/V03.01/Auslieferung/2015-06-03/en

copyright by LIEBHERR

7.13.3 Overview of main boom 2821 steel pendant straps + reducing adapter 2821/2316

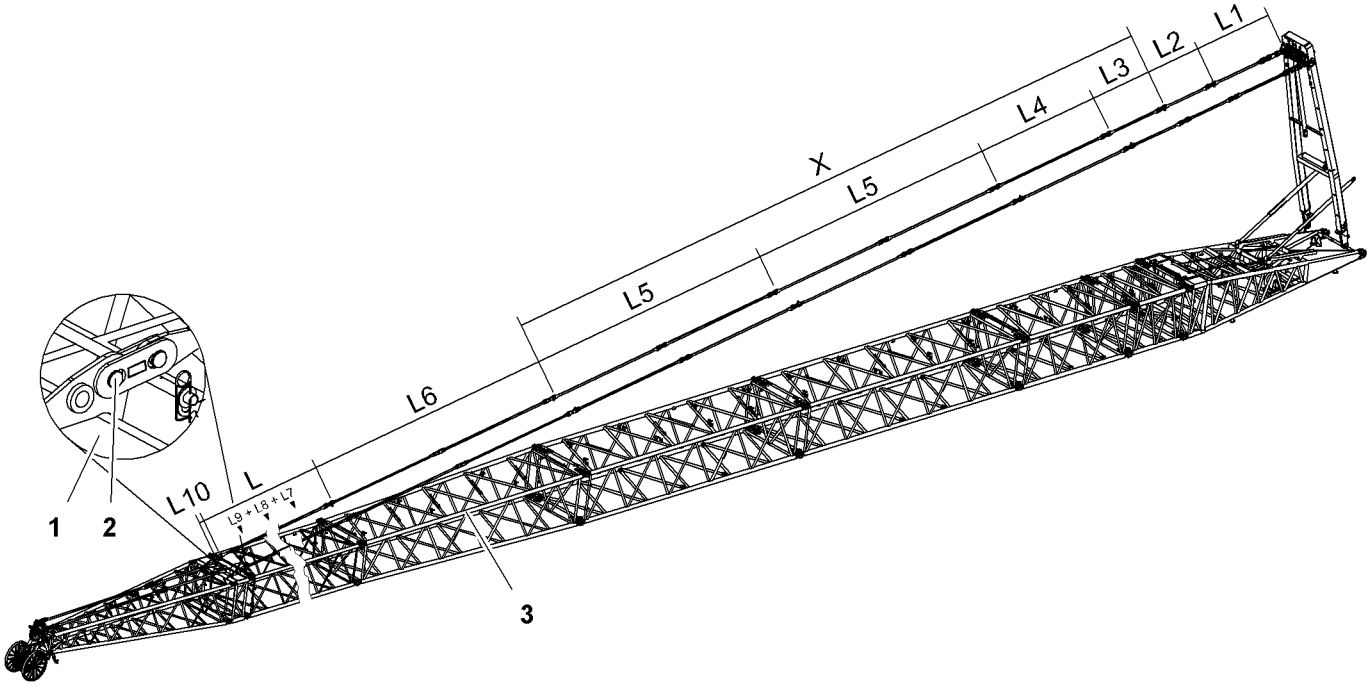

Fig. 4160: Overview of main boom 2821 steel pendant straps + reducing adapter 2821/2316

1 Main boom section 2316 1 m (3 ft)

2 Pin connection point main boom backstay straps

3 Reducing adapter

Pendant straps A-frame1 to main boom head 2316

Name			Value
L1	**A-frame1 equalizer** (For more information see: A-frame1 equalizer, page 75)		3730 mm 12‘ 3“ ft-in
L2	**Main boom base section equalizer** (For more information see: Equalizer of main boom base section 2821.30, page 189)		2670 mm 8‘ 9“ ft-in
X	**Main boom pendant straps** consisting of:		Total **L3** + Total **L4** + Total **L5**
	L3	**Main boom pendant strap 3 m (10 ft)** (For more information see: Main boom pendant strap 3 m (10 ft), page 190)	
	L4	**Main boom pendant strap 6 m (20 ft)** (For more information see: Main boom pendant strap 6 m (20 ft), page 192)	
	L5	**Main boom pendant strap 12 m (40 ft)** (For more information see: Main boom pendant strap 12 m (40 ft), page 194)	

LWN/LR.x/V03.01//Auslieferung/2015-06-03/en

copyright by LIEBHERR

Name			Value
L6	**Reducing adapter pendant strap 12 m (40 ft)** (For more information see: Reducing adapter pendant strap 12 m (40 ft), page 240)		12000 mm 39‘ 4“ ft-in
L	**Main boom pendant straps** consisting of:		Total **L7** + Total **L8** + Total **L9**
	L7	**Main boom pendant strap 3 m (10 ft)** (For more information see: Jib pendant strap 3 m (10 ft), page 308)	
	L8	**Main boom pendant strap 6 m (20 ft)** (For more information see: Jib pendant strap 6 m (20 ft), page 308)	
	L9	**Main boom pendant strap 12 m (40 ft)** (For more information see: Jib pendant strap 12 m (40 ft), page 309)	
L10	**Connecting link** (For more information see: Connecting link, page 241)		350 mm 1‘ 2“ ft-in

Tab. 498: Pendant straps A-frame1 to main boom head 2316

Configuration of main boom pendant straps (X):

Reducing adapter installation position	Configuration of main boom pendant straps (X)
43 m 141‘ 1“ ft-in	X = L3 + L4 + L5 + L5
46 m 150‘ 11“ ft-in	X = L5 + L5 + L5
55 m 180‘ 5“ ft-in	X = L3 + L4 + L5 + L5 + L5

Tab. 499: Configuration of main boom pendant straps (X) depends on the reducing adapter installation position

Configuration of main boom pendant straps (L):

Required number of main boom pendant straps 3 m (10 ft) (**L7**) corresponds to number of main boom sections 3 m (10 ft).

Required number of main boom pendant straps 6 m (20 ft) (**L8**) corresponds to number of main boom sections 6 m (20 ft).

Required number of main boom pendant straps 12 m (40 ft) (**L9**) corresponds to number of main boom sections 12 m (40 ft).

Note

▶ For admissible number of main boom sections 3 m (10 ft), 6 m (20 ft), 12 m (40 ft), refer to the following tables: (For more information see: 7.13.1 Configuration of main boom, page 1450) .

LWN/LR.x/V03.01/Auslieferung/2015-06-03/en

copyright by LIEBHERR

7.13.4 Overview of main boom 2821 CF pendant straps + reducing adapter 2821/2316

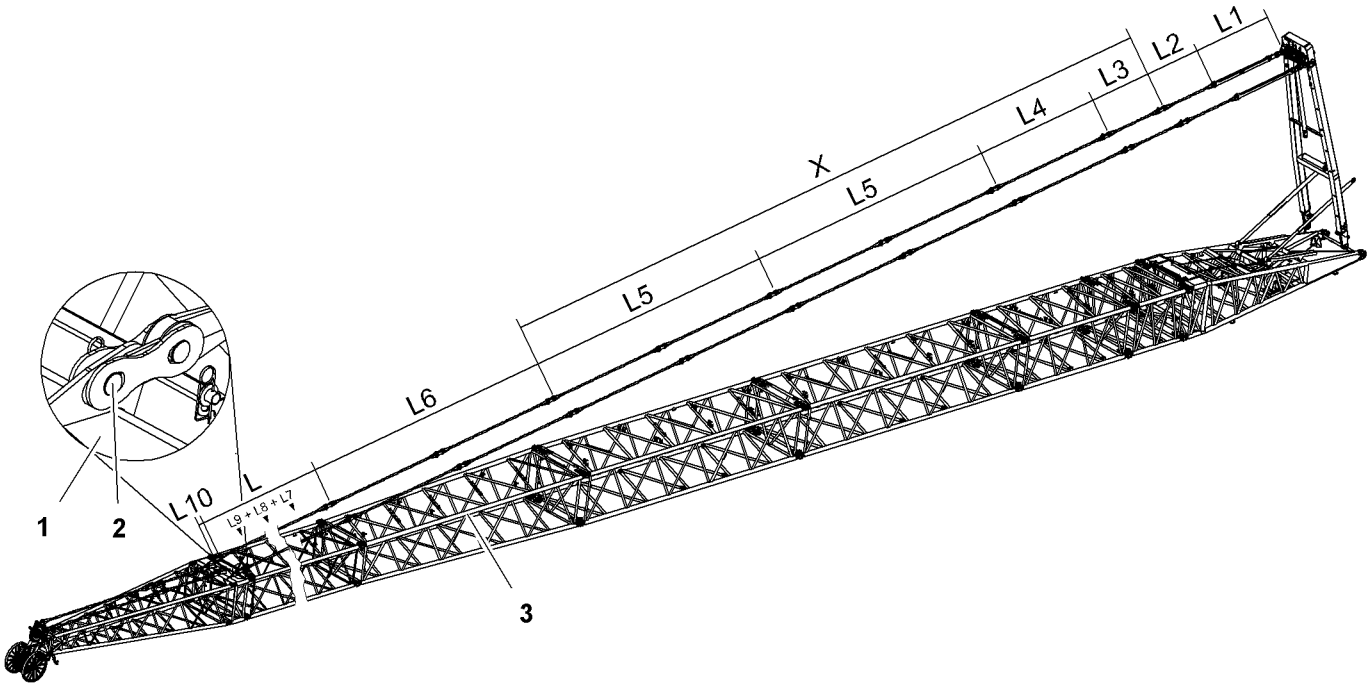

Fig. 4161: Overview of main boom 2821 CF pendant straps + reducing adapter 2821/2316

1 Main boom section 2316 1 m (3 ft)

2 Pin connection point main boom backstay straps

3 Reducing adapter

Pendant straps A-frame1 to main boom head 2316

Name			Value
L1	**A-frame1 equalizer** (For more information see: A-frame1 equalizer, page 76)		3700 mm 12‘ 2“ ft-in
L2	**Main boom base section equalizer** (For more information see: Equalizer of main boom base section 2821.30, page 198)		2700 mm 8‘ 10“ ft-in
X	**Main boom pendant straps** consisting of:		Total **L3** + Total **L4** + Total **L5**
	L3	**Main boom pendant strap 3 m (10 ft)** (For more information see: Main boom pendant strap 3 m (10 ft), page 201)	
	L4	**Main boom pendant strap 6 m (20 ft)** (For more information see: Main boom pendant strap 6 m (20 ft), page 204)	
	L5	**Main boom pendant strap 12 m (40 ft)** (For more information see: Main boom pendant strap 12 m (40 ft), page 208)	

LWN/LR.x/V03.01//Auslieferung/2015-06-03/en

copyright by LIEBHERR

Name			Value
L6	**Reducing adapter pendant strap 12 m (40 ft)** (For more information see: Reducing adapter pendant strap 12 m (40 ft), page 242)		12000 mm 39‘ 4“ ft-in
L	**Main boom pendant straps** consisting of:		Total **L7** + Total **L8** + Total **L9**
	L7	**Main boom pendant strap 3 m (10 ft)** (For more information see: Jib pendant strap 3 m (10 ft), page 317)	
	L8	**Main boom pendant strap 6 m (20 ft)** (For more information see: Jib pendant strap 6 m (20 ft), page 319)	
	L9	**Main boom pendant strap 12 m (40 ft)** (For more information see: Jib pendant strap 12 m (40 ft), page 320)	
L10	**Connecting link** (For more information see: Connecting link, page 243)		350 mm 1‘ 2“ ft-in

Tab. 500: Pendant straps A-frame1 to main boom head 2316

Configuration of main boom pendant straps (X):

Reducing adapter installation position	Configuration of main boom pendant straps (X)
43 m 141‘ 1“ ft-in	X = L3 + L4 + L5 + L5
46 m 150‘ 11“ ft-in	X = L5 + L5 + L5
55 m 180‘ 5“ ft-in	X = L3 + L4 + L5 + L5 + L5

Tab. 501: Configuration of main boom pendant straps (X) depends on the reducing adapter installation position

Configuration of main boom pendant straps (L):

Required number of main boom pendant straps 3 m (10 ft) (**L7**) corresponds to number of main boom sections 3 m (10 ft).

Required number of main boom pendant straps 6 m (20 ft) (**L8**) corresponds to number of main boom sections 6 m (20 ft).

Required number of main boom pendant straps 12 m (40 ft) (**L9**) corresponds to number of main boom sections 12 m (40 ft).

Note

▶ For admissible number of main boom sections 3 m (10 ft), 6 m (20 ft), 12 m (40 ft), refer to the following tables: (For more information see: 7.13.1 Configuration of main boom, page 1450) .

The main boom pendant straps may consist of generation A and generation B main boom pendant straps. Mixing is only admissible if the number of generation B main boom pendant straps only differs by at most 1 in the left and the right strand of the main boom pendant straps.

LWN/LR.x/V03.01/Auslieferung/2015-06-03/en

copyright by LIEBHERR

DANGER
Inadmissible mixing of generation A and generation B main boom pendant straps! Structural failure.

▶ Ensure that the number of generation B main boom pendant straps differs by at most 1 in the left and the right strand of the main boom pendant straps.

7.13.5 Reeving diagrams for one rope across main boom head 2316 (load position1)

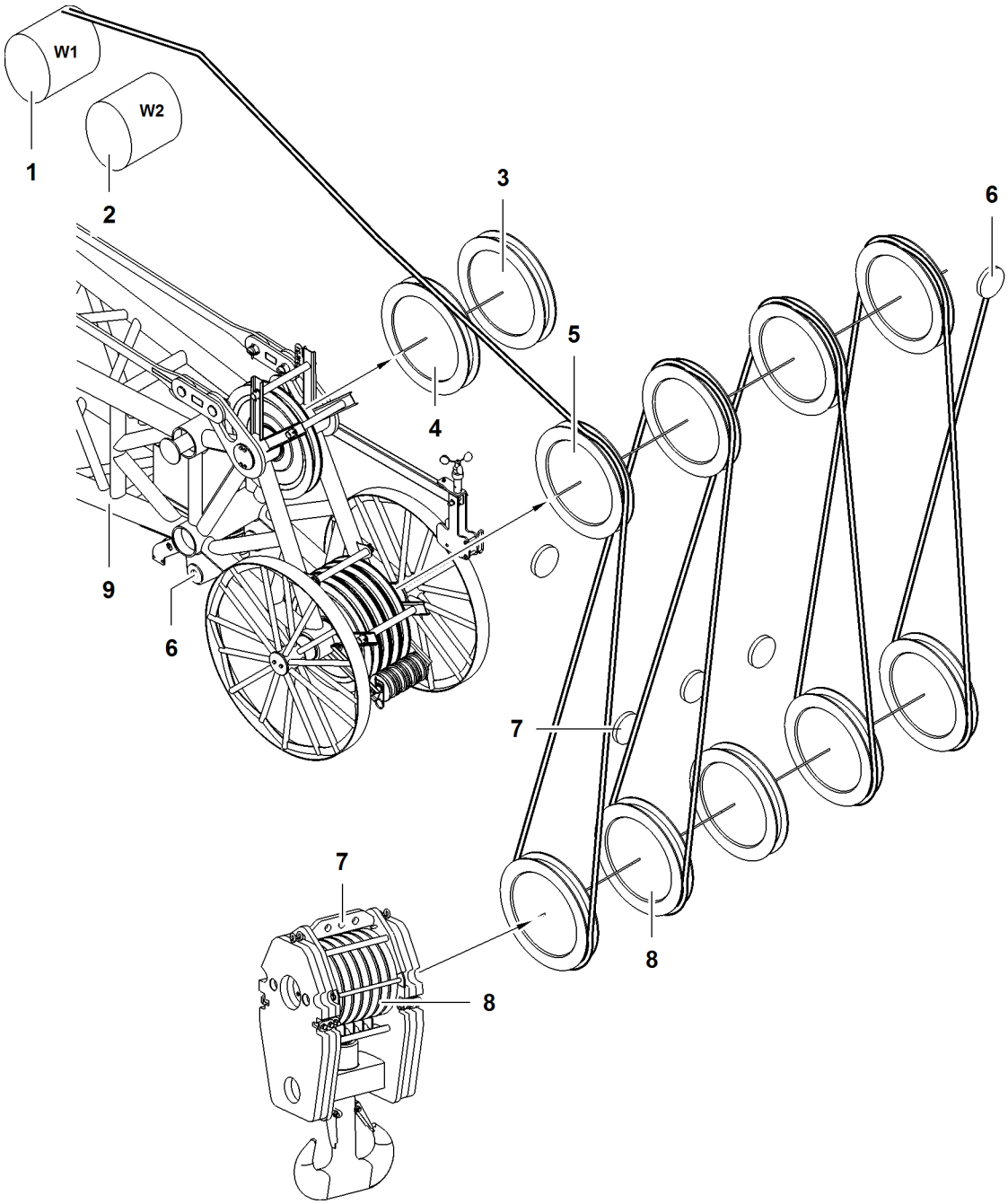

Fig. 4162: Reeving diagrams for one rope across main boom head 2316 (load position1)

1	Winch1	**4**	Gantry pulley of main boom head	**7**	Rope fixing points of pulley block

See next page for continuation of the image legend

LWN/LR.x/V03.01//Auslieferung/2015-06-03/en

copyright by LIEBHERR

2	Winch2	**5**	Pulley (4x) of main boom head	**8**	Pulley set of pulley block
3	Retrofit kit* for operation with two ropes across jib head	**6**	Rope fixing point (2x) of main boom head	**9**	Main boom head

DANGER
Incorrect number of reevings!
Structural breakdown, toppling of machine.

▶ Choose the correct number of reevings as per the load chart.

Reeving diagrams for one rope across main boom head 2316 (load position1)

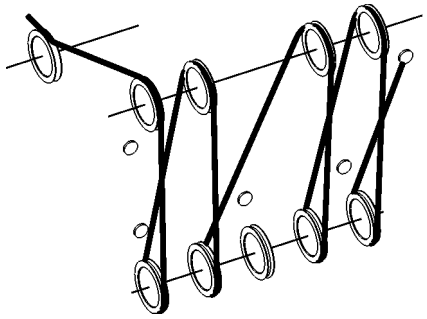

8x

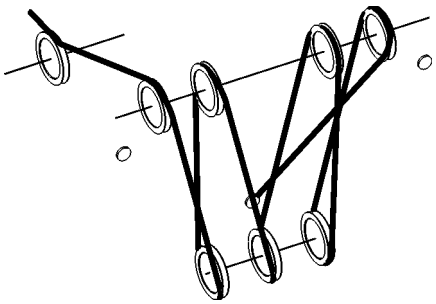

7x

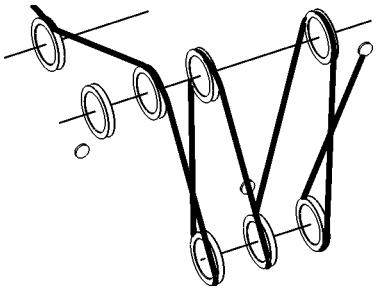

6x

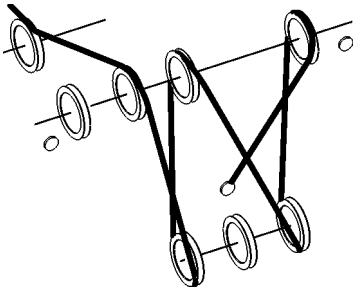

5x

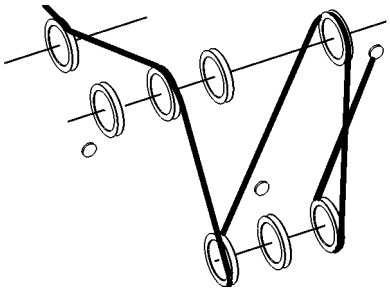

4x

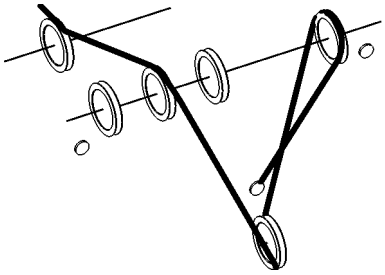

3x

LWN/LR.x/V03.01//Auslieferung/2015-06-03/en

copyright by LIEBHERR

Reeving diagrams for one rope across main boom head 2316 (load position1)	
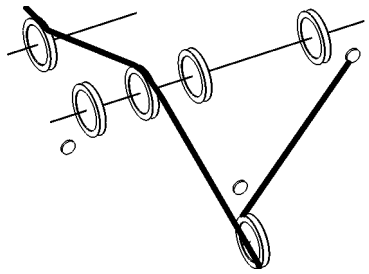 2x	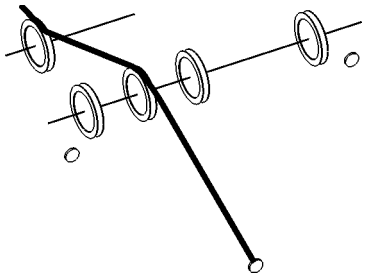 1x

Tab. 502: Reeving diagrams for one rope across main boom head 2316 (load position1)

7.13.6 Reeving diagrams for two ropes across main boom head 2316 (load position1)

DANGER
Inadmissible number of reevings!
Structural breakdown, toppling of machine.

▶ Choose correct number of reevings as indicated in load chart.

copyright by LIEBHERR

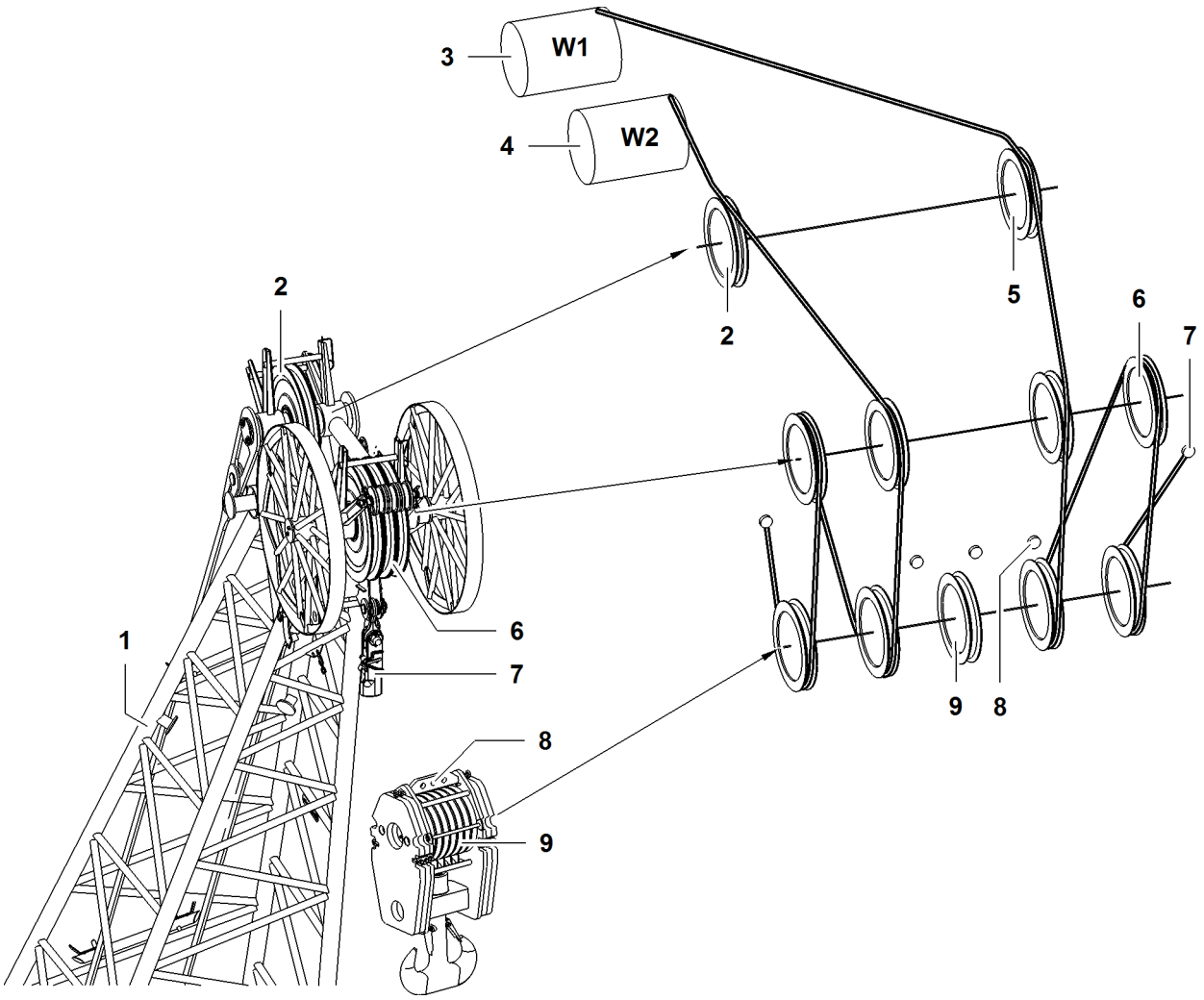

Fig. 4171: Reeving diagrams for two ropes across main boom head 2316 (load position1)

1	Main boom head	**4**	Winch2	**7**	Rope fixing point (2x) of main boom head
2	Gantry pulley of main boom head	**5**	Retrofit kit* for operation with two ropes across jib head	**8**	Rope fixing points of pulley block
3	Winch1	**6**	Pulley (4x) of main boom head	**9**	Pulley set of pulley block

LWN/LR.x/V03.01//Auslieferung/2015-06-03/en

copyright by
LIEBHERR

7.14 Assembling the main boom + reducing piece

Ensure that the following conditions are fulfilled:
- ❑ Assembly functions are switched on.
- ❑ The machine is ready for use as an assembly crane, or an assist crane is available.
- ❑ Work plans have been drawn up.
- ❑ The length and the order of the main boom intermediate pieces are known.
- ❑ The installation position of the reducing piece is known.
- ❑ Any accessories required are available.

7.14.1 Notes

The installation of the reducing adapter described in the following applies for all system dimensions of the reducing adapter.

The illustrations have been simplified or schematically represented for reasons of uniformity and represent the principles of assembly. They do not provide a detailed representation of the components.

7.14.2 Installing the reducing piece

The assembly stages are identical to those for the main boom without reducing piece. The following section contains information specifically for the installation of the reducing piece. The remaining operations are to be carried out as described previously in the main boom assembly section.

DANGER
Installation of the reducing piece in a wrong assembly position!
Structural breakdown.

▶ Fit educing piece according to relevant system instructions exclusively.

▶ Install and bolt the reducing piece in the prescribed position.

▶ Bolt the reducing piece pendant straps to the main boom in the position of the reducing piece.

DANGER
Incorrect assembly of the main boom!
Structural breakdown.

If the 1 m (3 ft) boom section is required according to the reducing piece's system-specific information:
▶ Install the 1 m (3 ft) boom section between the boom head section and the last boom section.

LWN/LR.x/V03.01//Auslieferung/2015-06-03/en

copyright by LIEBHERR

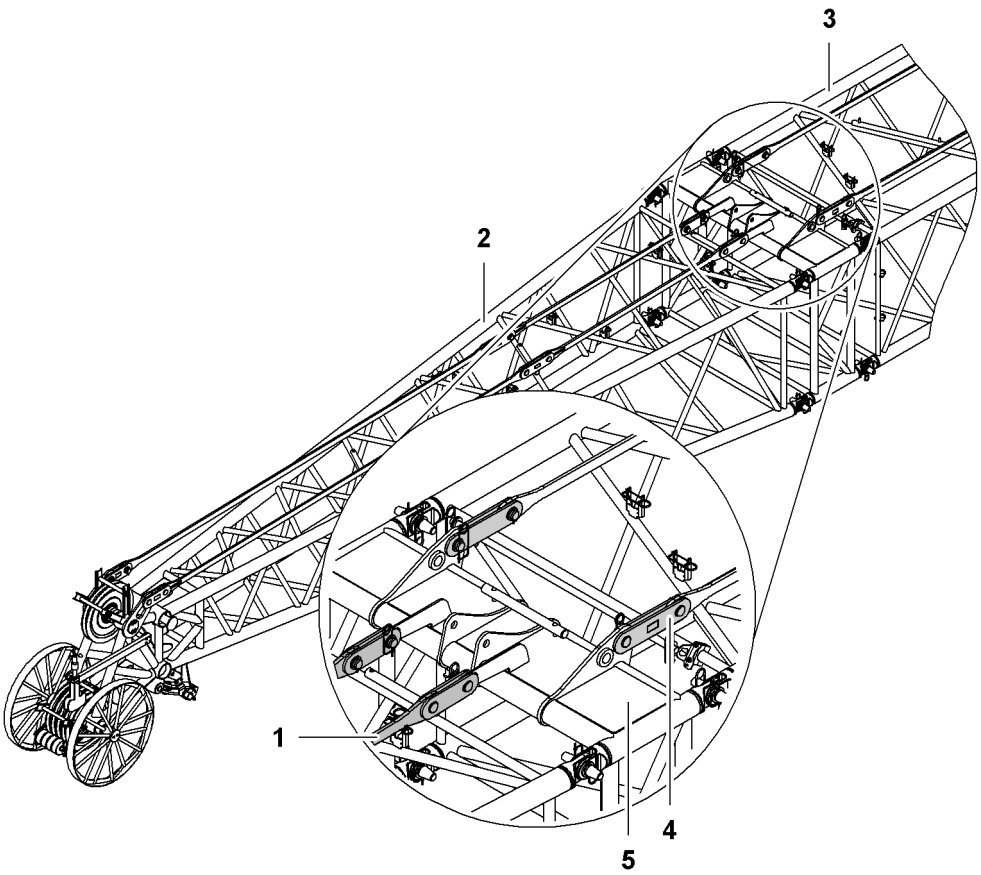

Fig. 4172: Install the 1 m (3 ft) boom section

1	Main boom pendant strap on boom head section (2x)	**4**	Main boom pendant strap (2x)
2	Main boom head section	**5**	Boom section1 m (3 ft)
3	Main boom section		

If the 1 m (3 ft) boom section **5** is required according to the reducing piece's system-specific information:

▶ Install the 1 m (3 ft) boom section **5** between the boom head section **1** and the last boom section **2**.

▶ Bolt the main boom pendant straps **4** to the boom section 1 m (3 ft) **5**.

▶ Bolt the main boom pendant straps **3** on the boom head section to the boom section 1 m (3 ft) **5**.

7.14.3 Installing mid-point suspension

The lengths of the stay ropes and backstay shackles and their assembly positions are shown in the relevant instructions for the boom.

DANGER
Incorrect installation of mid-point suspensions!
Structural failure.

▶ Fit mid-point suspensions according to relevant system instructions.

▶ Assemble required length of backstay shackles in line with system-relevant details.

LWN/LR.x/V03.01//Auslieferung/2015-06-03/en

- Remove the locking springs and washers from both sides of the boom pin connection double-taper pin and stow away.
- Repeat procedure on opposite side.

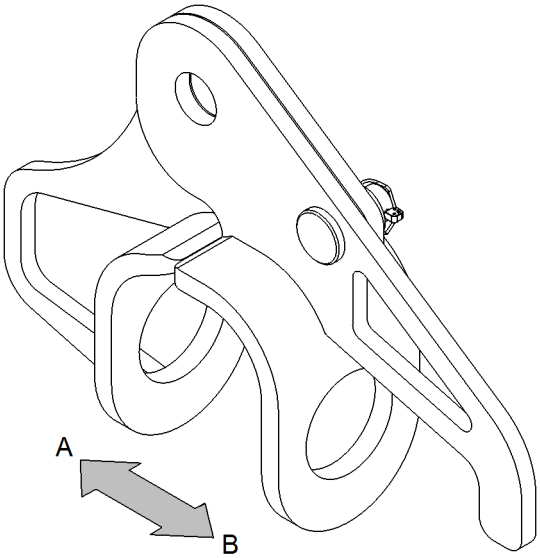

Fig. 4173: Mid-point suspension forks

A Main boom interior **B** Main boom exterior

The forks may have different shapes. The permissible shape depends on the boom configuration (For more information see: 1 Product description, page 49) .

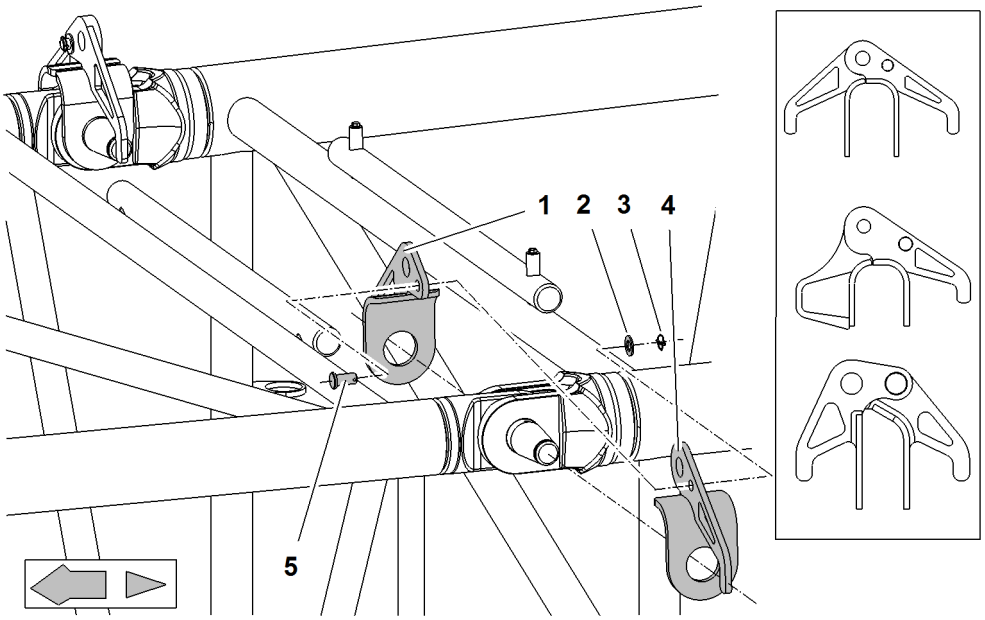

Fig. 4174: Assembling the mid-point suspension forks

1 Inner section of fork
2 Washer
3 Linchpin
4 Outer section of fork
5 Pin

LWN/LR.x/V03.01//Auslieferung/2015-06-03/en

copyright by LIEBHERR

Note
Special assembly procedure when mid-point suspension and rope guide are installed in exactly the same position on the main boom!

▶ Replace mid-point suspension forks with rope guide forks.

▶ Mount inner section of fork **1** on double-taper pin.

▶ Mount outer section of fork **4** on double-taper pin.

▶ Pin inner section of fork **1** to outer section of fork **4**.

▶ Secure pin **5** with washer **2** and linchpin **3**.

▶ Repeat procedure on opposite side.

The installation of the mid-point suspension in front of the reducing adapter is described in the main boom assembly instructions (For more information see: 7.6.10 Installing mid-point suspension, page 1259) (For more information see: Installing mid-point suspension, page 1367) .

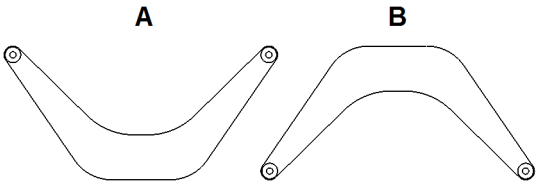

Fig. 4175: Installation direction of the spacer bracket behind the reducing adapter

A Spacer bracket down **B** Spacer bracket up

Install spacer bracket behind reducing adapter in installation position spacer bracket **B up**.

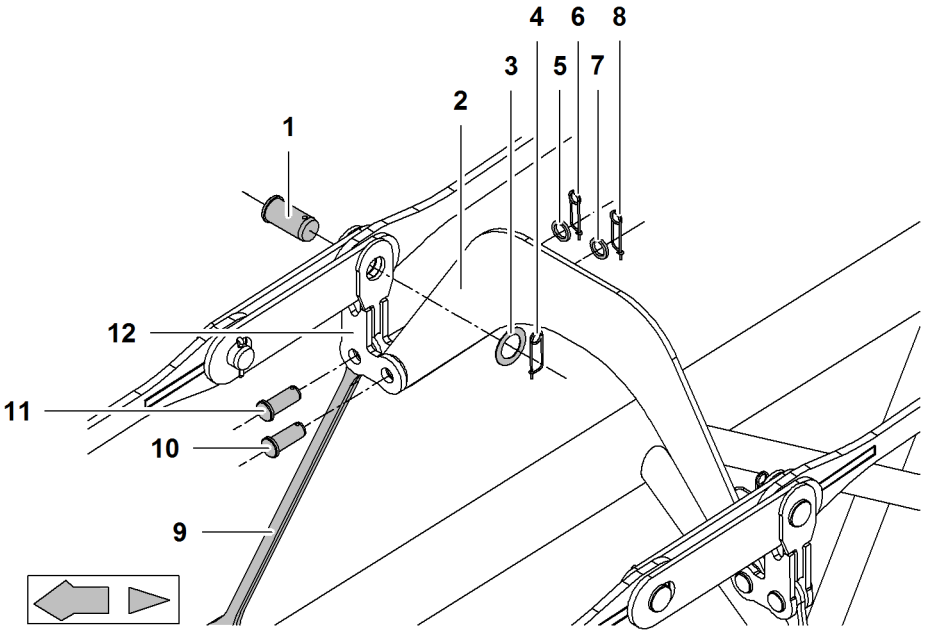

Fig. 4176: Installing pendant straps, spacer bracket, connecting elements and mid-point suspension backstay shackles behind the reducing adapter

1 Pins for pendant strap
2 Spacer bracket
3 Washer
7 Washer
8 Locking spring
9 Top backstay shackle (2x)

See next page for continuation of the image legend

LWN/LR.x/V03.01//Auslieferung/2015-06-03/en

4	Locking spring	**10**	Pin for spacer bracket
5	Washer	**11**	Pin for backstay shackle
6	Safety pin	**12**	Connecting element

▶ Pin connecting element **12** to pendant strap.

▶ Secure pin **1** with washer **3** and locking spring **4**.

NOTICE
Inadmissible run of winch1/winch2 rope!
Damage to winch1/winch2 rope.

▶ Ensure that winch1/winch2 rope runs underneath spacer bracket **2**.

▶ Pin connecting element **12** to spacer bracket **2**.

▶ Secure pin **10** with washer **7** and locking spring **8**.

Note

If stay ropes instead of backstay shackles must be installed according to system details:
▶ Install stay ropes using the same procedure as with backstay shackles.

▶ Pin connecting element **12** to top backstay shackles **9**.

▶ Secure pin **11** with washer **5** and locking spring **6**.

▶ Repeat procedure on opposite side.

LWN/LR.x/V03.01//Auslieferung/2015-06-03/en

copyright by
LIEBHERR

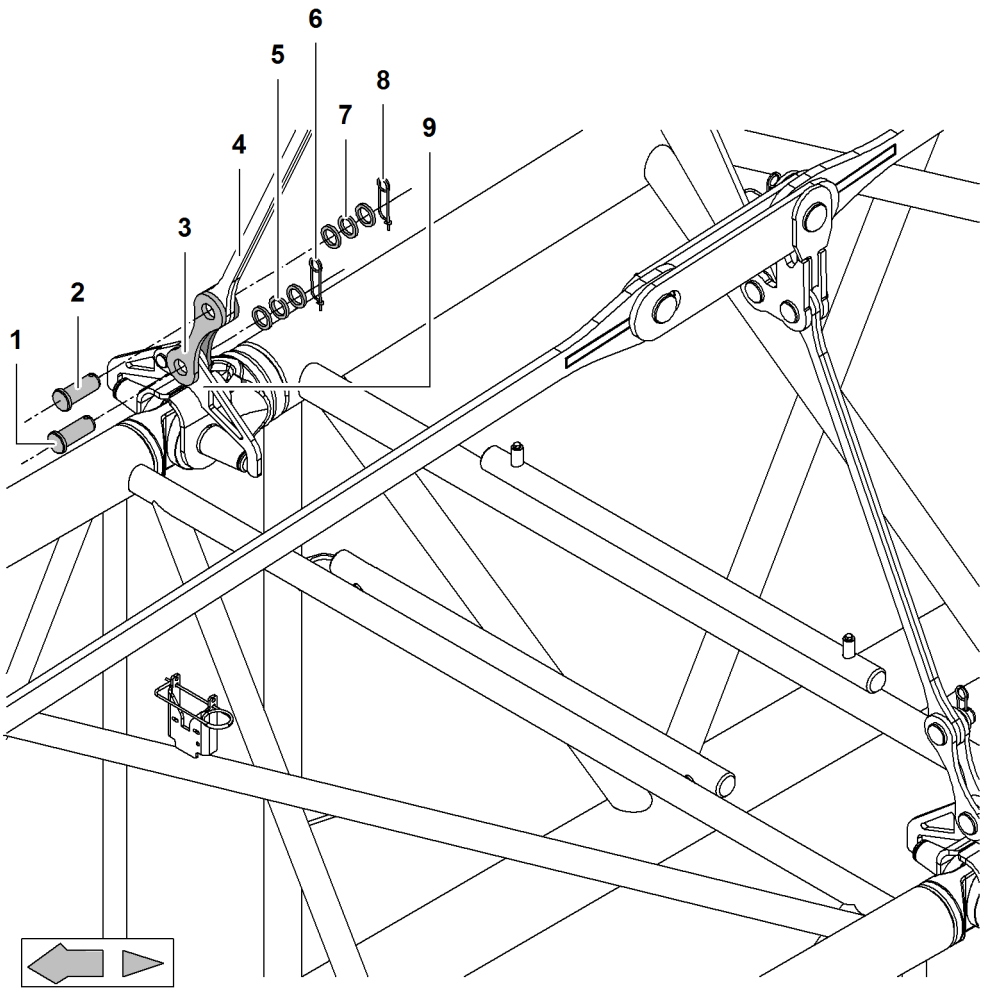

Fig. 4177: Installing bottom mid-point suspension backstay shackles behind the reducing adapter

1	Pin	**6**	Safety pin
2	Pin	**7**	Washers
3	Bottom backstay shackle (2x)	**8**	Locking spring
4	Top backstay shackle (2x)	**9**	Fork
5	Washers		

Note

▶ To facilitate pinning of the bottom backstay shackles **3** and fork **9**: Use A-frame1 to lift pendant straps.

▶ Pin bottom backstay shackles **3** to fork **9**.

As many washers **1** as possible must be inserted to keep the pin **5** from slipping.

▶ Secure pin **1** with washers **5** and locking spring **6**.

▶ Pin top backstay shackles **4** to bottom backstay shackles **3**.

As many washers **2** as possible must be inserted to keep the pin **7** from slipping.

▶ Secure pin **2** with washers **7** and locking spring **8**.

▶ Repeat procedure on opposite side.

LWN/LR.x/V03.01//Auslieferung/2015-06-03/en

copyright by
LIEBHERR

7.14.4 Moving the lightning rods* into working position

Installation of lightning rods on jib head as main boom head

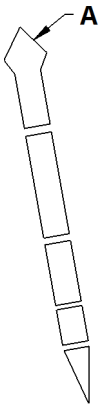

Fig. 4178: Installation of lightning rods on jib head as main boom head

A Jib head as main boom head

Boom configuration	Number of lightning rods	Installation positions
Main boom + reducing adapter	1	A

Tab. 503: Installation and number of lightning rods on jib head as main boom head

LWN/LR.x/V03.01//Auslieferung/2015-06-03/en

copyright by
LIEBHERR

Moving the lightning rods* on the jib head as main boom head into working position

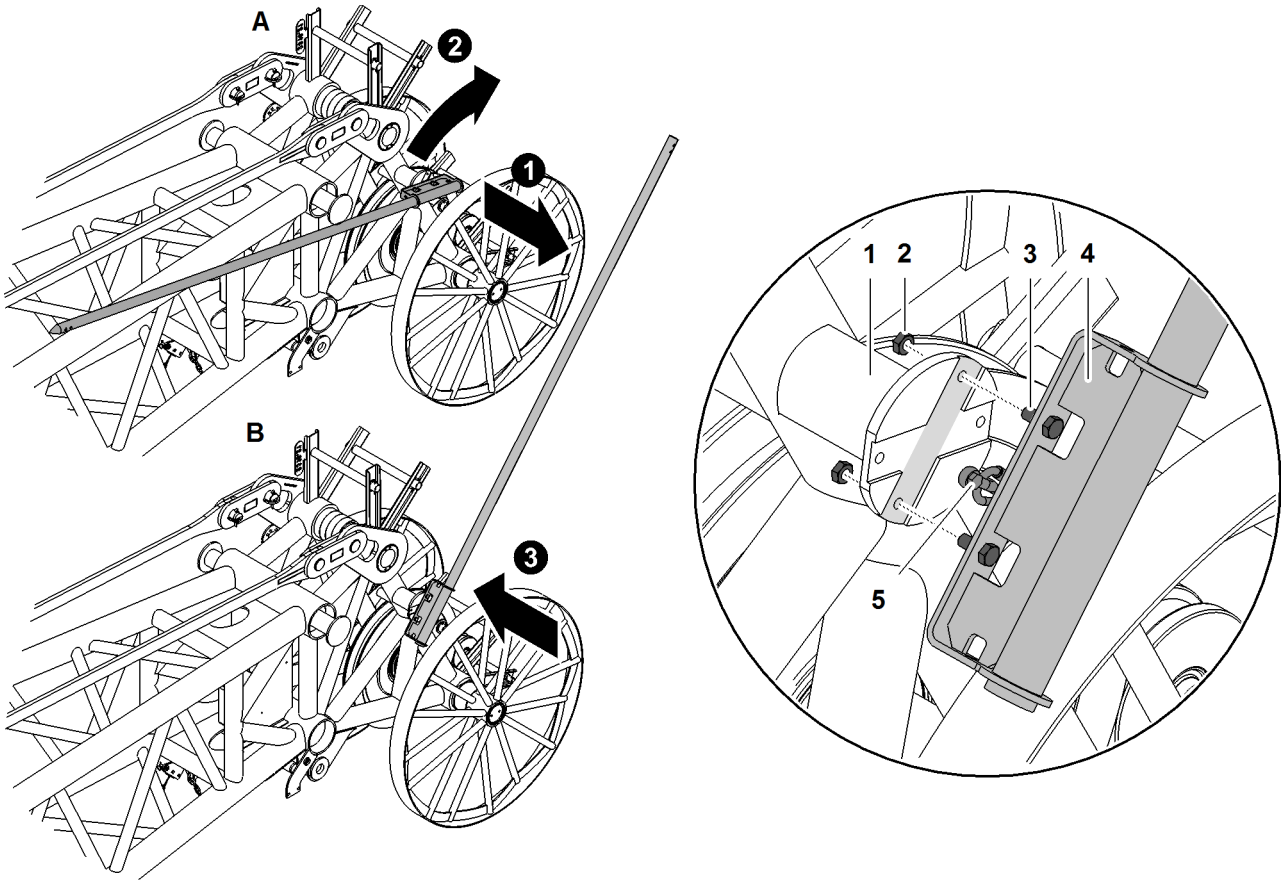

Fig. 4179: Moving the lightning rods on the jib head as main boom head into working position (illustration of principle)*

A Transport position
B Working position
1 Mounting plate
2 Nut (2x)
3 Screw (2x)
4 Lightning rod
5 Safety rope

- ▶ Undo safety rope **5**.
- ▶ Undo nuts **2**.
- ▶ Undo screws **3**.
- ▶ Move lightning rod **4** from transport position **A** to working position **B**.

Note
Liebherr recommends:

- ▶ Grease threads of the screws **3**.

- ▶ Attach lighting rod **4** withscrews **3**.
- ▶ Lock screws **3** with nuts **2**.

LWN/LR.x/V03.01//Auslieferung/2015-06-03/en

copyright by
LIEBHERR

NOTICE
Safety rope not attached!
Dropping parts.

▶ Ensure that safety rope **5** is attached.

▶ Attach safety rope **5**.

NOTICE
Tip not installed!
Improperly deflected current.
Dropping parts.

▶ Ensure that the tip on the lightning rod **4** is installed.

▶ Ensure that the screws of the tip are tightened.

▶ Ensure that the tip on the lightning rod **4** is installed.

▶ Ensure that the screws of the tip are tightened.

7.14.5 Reeving the rope

The rope must be reeved as specified in the rope reeving diagram according to the boom and application requirements.

WARNING
Unsecured walking on the boom!
Risk of falling off the boom.

▶ A fall arrest system must be worn when working on the boom to prevent falling.

Ensure that the following conditions are satisfied:
❑ Cylinder adjustment functions are on.

LWN/LR.x/V03.01//Auslieferung/2015-06-03/en

copyright by
LIEBHERR

Reeving the rope using a rope reeving winch

Dismantling rope protection pipes

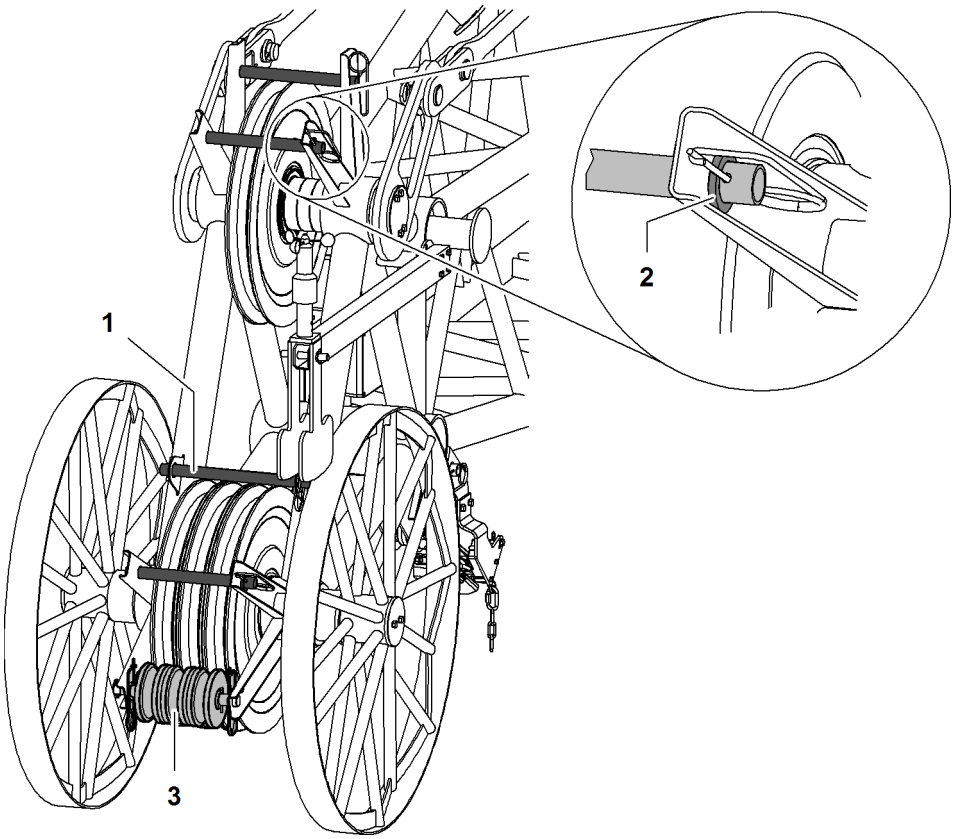

Fig. 4180: Rope protection pipes jib head section (1008, 1309, 1713, 1916, 2316)

1 Rope guard tube (4x)
2 Washer
3 Rope protection rollers package

The rope protection pipes are secured with a cotter pin on one side and with a safety pin on the other side.

▶ Remove the safety pin and washer **2**.

▶ Remove the rope protection pipes **1**.

Dismantling the rope protection rollers package

The number of rope protection rollers corresponds to the number of pulleys of the jib head.

LWN/LR.x/V03.01//Auslieferung/2015-06-03/en

copyright by
LIEBHERR

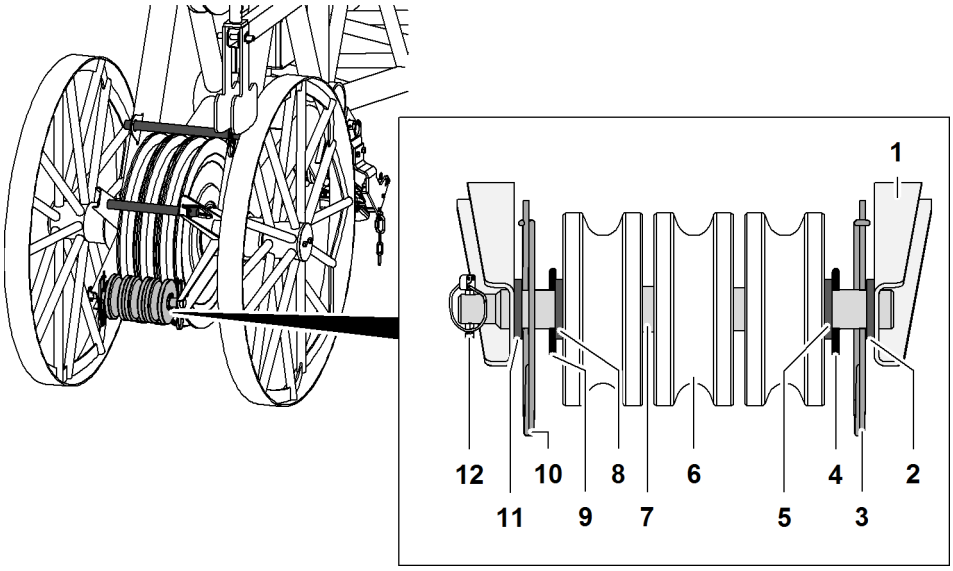

Fig. 4181: Rope protection rollers package

1	Mount	**7**	Shaft
2	Washer	**8**	Washer
3	Safety pin	**9**	Cotter pin
4	Cotter pin	**10**	Safety pin
5	Washer	**11**	Washer
6	Pulley	**12**	Linchpin

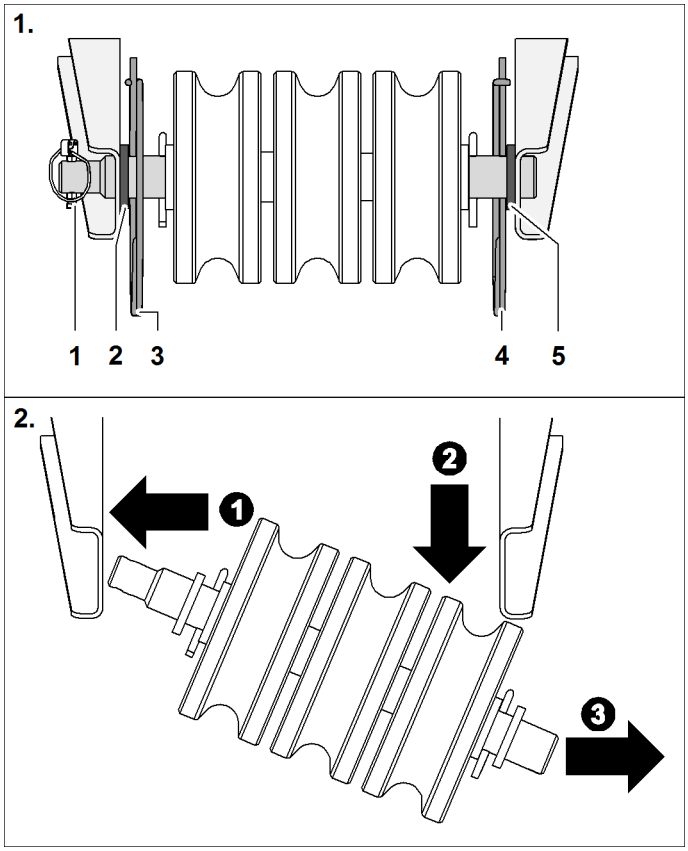

Fig. 4182: Dismantling the rope protection rollers package

1	Linchpin	**4**	Safety pin

See next page for continuation of the image legend

LWN/LR.x/V03.01//Auslieferung/2015-06-03/en

copyright by
LIEBHERR

2 Washer
3 Safety pin
5 Washer

▶ Remove the linchpin **1**.

▶ Remove safety pin **3 + 4**.

▶ Take rope protection rollers package off the support.
▷ Rope protection rollers package is dismantled.

Reeving the rope

▶ Open up the rope guide (if present).

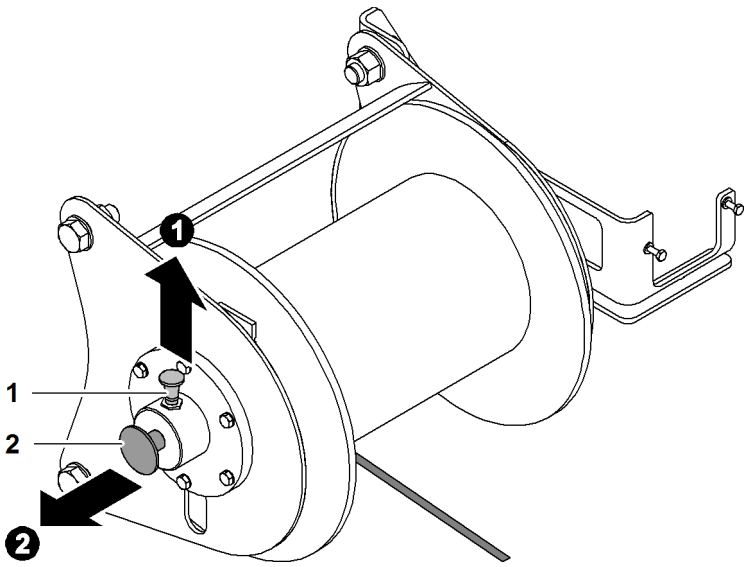

Fig. 4183: Setting the rope lug to free-wheel

1 Locking element
2 Shaft

Note

Liebherr recommends:
▶ Making it easier to pull out the axle **2**: move the rope reeving winch manually back and forth.

▶ Pull up the locking element **1** and pull out the axle **2** at the same time.
▷ Rope reeving winch is set to free-wheel.

LWN/LR.x/V03.01//Auslieferung/2015-06-03/en

copyright by LIEBHERR

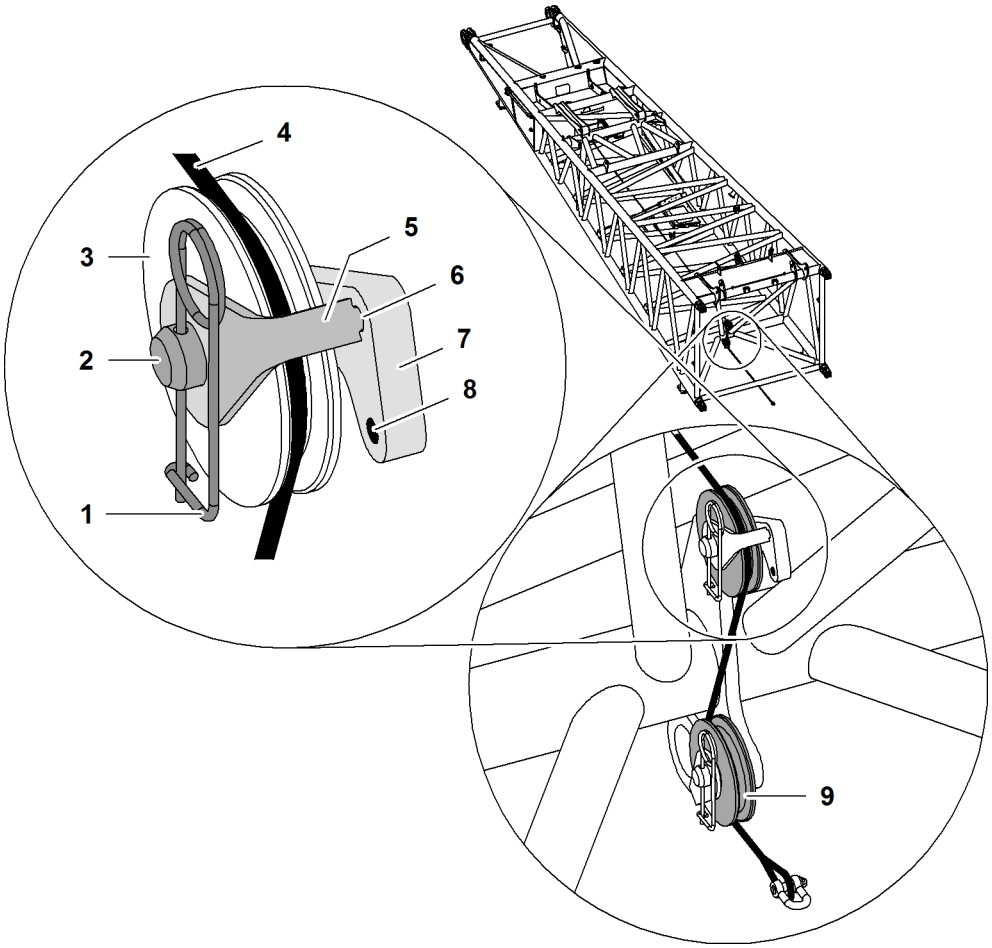

Fig. 4184: Reeving in the rope of the rope reeving winch

1	Safety pin	**6**	Recess
2	Shaft	**7**	Support with recesses
3	Upper pulley	**8**	Recess
4	Rope of the rope reeving winch	**9**	Lower pulley
5	Locking element		

Depending on the machine type, the mounting **7** may have one or two recesses.

▶ Remove safety pins **1**.

▶ Remove **5** securing element.

▶ Place rope of the rope reeving winch **4** across the top pulley **3**.

NOTICE
Wrongly mounted locking element!
Rope of the rope reeving winch jumps out of pulley.

▶ Make sure that the locking element **5** is mounted in recess **6**.

▶ Attach locking element **5** to axle **2** and guide in recess **6**.

▶ Attach the safety pin **1**.

▶ Repeat procedure on bottom pulley **9**.
▷ Rope of the rope reeving winch is guided through pulleys.

▶ Pull the luffing rope under the boom to the boom head.

▶ Reeve in the rope of the rope reeving winch according to reeving plan.

LWN/LR.x/V03.01//Auslieferung/2015-06-03/en

copyright by
LIEBHERR

- ▶ Pull the luffing rope next to the boom towards the basic machine.
- ▶ Lift luffing rope onto boom.
- ▶ Connect luffing rope with rope of winch1/winch2.

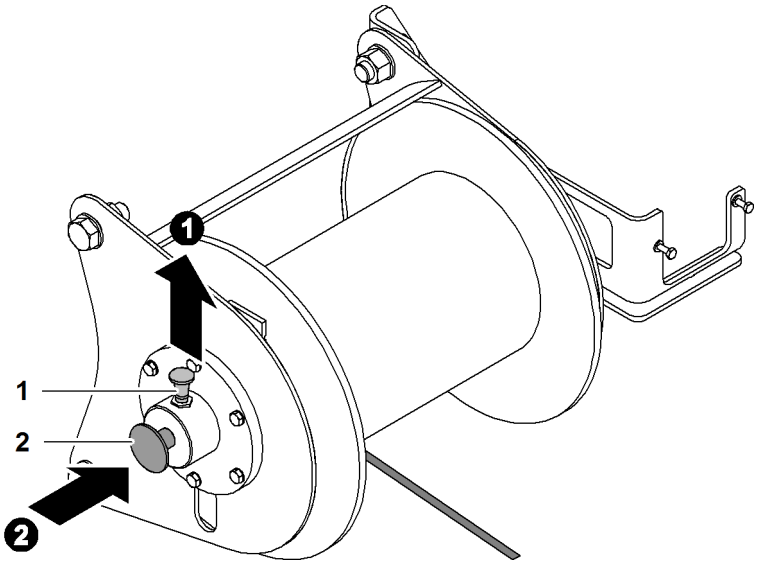

Fig. 4185: Stopping the free-wheel of the rope reeving winch

1 Locking element **2** Shaft

Note

Liebherr recommends:

- ▶ Making it easier to press in the axle **2**: move the rope reeving winch manually back and forth.

- ▶ Pull up the locking element **1** and press in the axle **2** at the same time.
  - ▷ Free-wheel of the luffing rope is deactivated.

WARNING

Never stand in the immediate vicinity of the rope reeving winch or the luffing rope!

- ▶ Make sure that no-one is standing in the danger area.
- ▶ Leave the danger area.

- ▶ Press and hold the *Rope reeving winch* button on control panel *X11*.
  - ▷ Rope reeving winch reeves in the rope of the rope reeving winch and tensions the rope of winch1/winch2.

If rope of winch1/winch2 is in the 8th rope layer (only with free-fall winch 130 kN (29,230 lb_f)):

- ▶ Press the *Bypass limit switch* button on control panel *X23*.
  - ▷ The 3-rope windings limit switch is bypassed.

There must be no slacking of the rope when unwinding.

- ▶ Unwind the rope of winch1/winch2 up to the rope fixing point.
- ▶ Press the *Rope reeving winch* button on control panel *X11*.
  - ▷ Rope reeving winch switched off.

LWN/LR.x/V03.01/Auslieferung/2015-06-03/en

copyright by LIEBHERR

- Remove rope of the rope reeving winch from the rope of winch1/winch2.

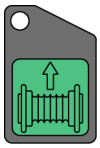

- Press and hold the *Rope reeving winch* button on control panel *X11*.
  - ▷ Luffing rope is being reeved.

- Press the *Rope reeving winch* button on control panel *X11*.
  - ▷ Rope reeving winch switched off.
- Close and secure the rope guide (if present).

Mounting the rope protection rollers package

NOTICE
Wrongly installed washers!
Rope protection rollers package falls out of the support.
Damage to jib head section.

- Ensure proper installation position of the washers.

LWN/LR.x/V03.01//Auslieferung/2015-06-03/en

copyright by
LIEBHERR

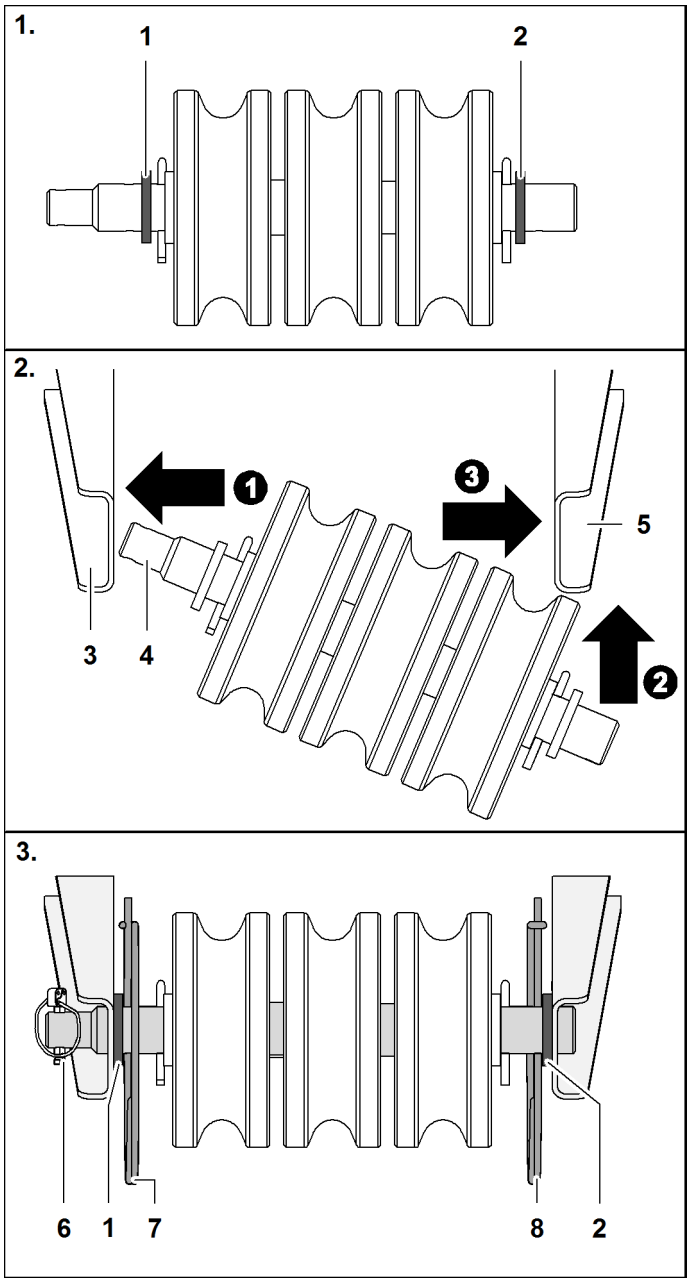

Fig. 4189: Mounting the rope protection rollers package on the jib head section

1	Washer	**5**	Mount
2	Washer	**6**	Linchpin
3	Mount	**7**	Safety pin
4	Shaft	**8**	Safety pin

▶ Place washers **1 + 2** on axle.

▶ Insert axle **4** of the rope protection rollers package into support **3**.

▶ Insert axle **4** into support **5**.

▶ Put washers **1 + 2** into position.

▶ Install safety pins **7 + 8**.

▶ Install linchpin **6**.
▷ Rope protection rollers package is installed.

LWN/LR.x/V03.01//Auslieferung/2015-06-03/en

copyright by
LIEBHERR

Installing rope protection pipes

▶ Mount and secure rope protection pipes.

Reeving the rope without using a rope reeving winch

▶ Remove the rope protection pipes on the boom and the pulley block.

▶ Open up the rope guide (if present).

▶ Connect auxiliary rope with the rope of winch1/winch2.

▶ Pull the auxiliary rope next to the boom as far as the boom head.

▶ Hoist the auxiliary rope onto the boom.

▶ Reeve the auxiliary rope according to the rope reeving system.

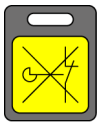

If rope of winch1/winch2 is in the 8th rope layer (only with free-fall winch 130 kN (29,230 lb_f)):

▶ Press the *Bypass limit switch* button on control panel *X23*.
  ▷ The 3-rope windings limit switch is bypassed.

There must be no slacking of the rope when unwinding.

▶ Unwind the rope of winch1/winch2 up to the rope fixing point.

▶ Remove auxiliary rope from the rope of winch1/winch2.

▶ Close and secure the rope guide (if present).

▶ Mount and secure rope protection pipes.

LWN/LR.x/V03.01//Auslieferung/2015-06-03/en

copyright by
LIEBHERR

7.15 Fixed jib 1713

System-relevant information for fixed jib 1713 :
- Configuration of jib
- Configuration of main boom
- Overview of pendant straps on fixed jib 1713
- Reeving diagrams for one rope across jib head 1713 (load position1)
- Reeving diagrams for two ropes across jib head 1713 (load position1)
- Reeving diagrams for one rope across main boom head 2821 (load position2)

7.15.1 Configuration of jib

DANGER
Excess length of jib!
Structural breakdown.

▶ Check jib length in load chart for validity.

Jib length	Configuration of jib (symbolic)
14 m 46 ft	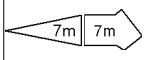
17 m 56 ft	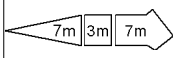
20 m 66 ft	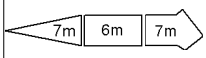
23 m 75 ft	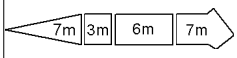
26 m 85 ft	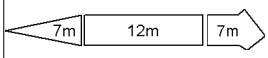
29 m 95 ft	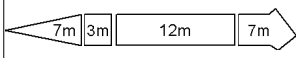
32 m 105 ft	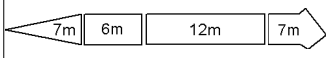
35 m 115 ft	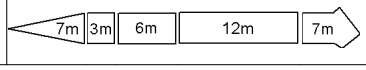

Tab. 504: Configuration of fixed jib 1713

7.15.2 Configuration of main boom

DANGER
Excess length of main boom!
Structural breakdown.

▶ Check main boom length in load chart for validity.

LWN/LR.x/V03.01//Auslieferung/2015-06-03/en

copyright by LIEBHERR

Note

▶ See system-relevant data of main boom for information on main boom configuration (For more information see: 7.5.1 Configuration of main boom, page 1230) .

7.15.3 Overview of pendant straps on fixed jib 1713

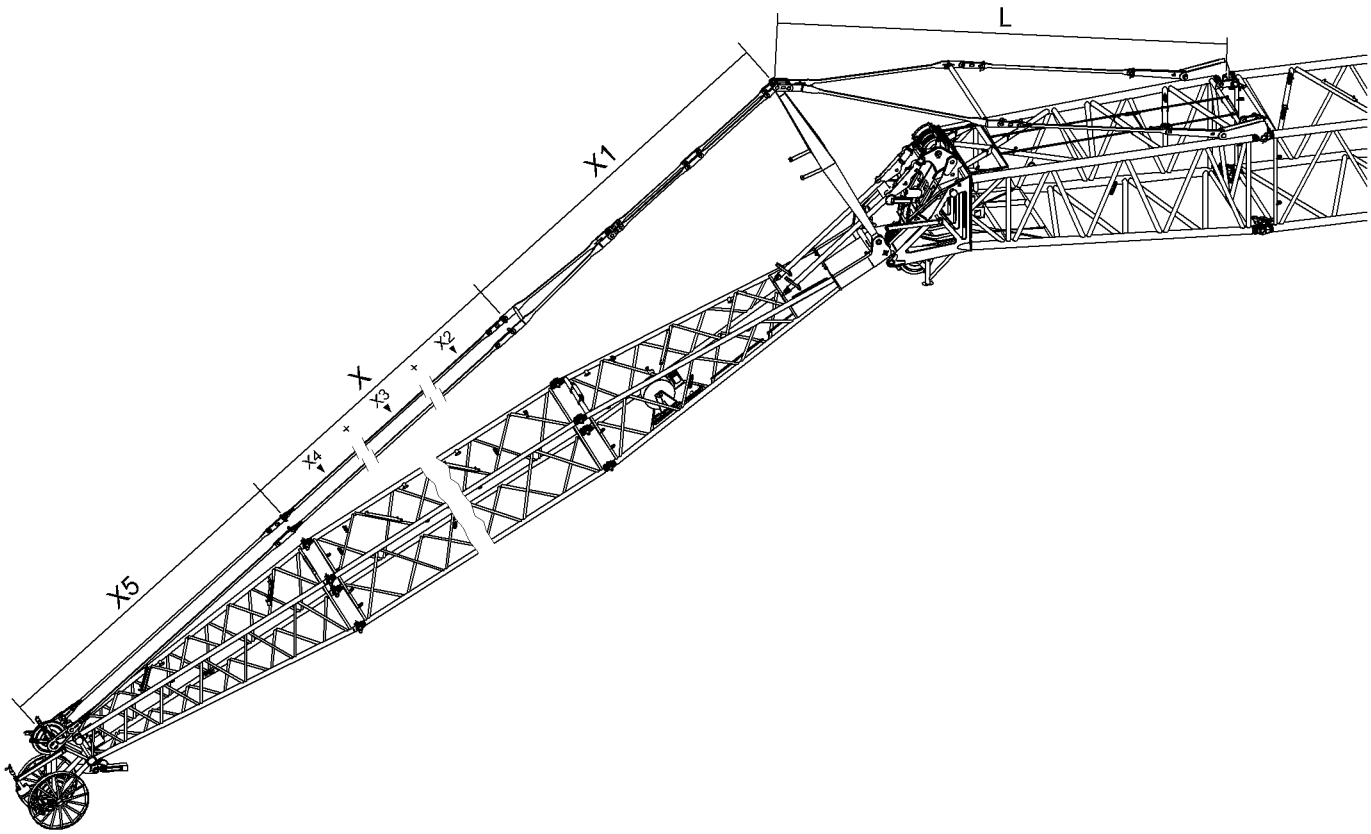

Fig. 4219: Overview of pendant straps on fixed jib 1713

Backstay straps A-frame2 to main boom head 2821

Name		Value
L	**A-frame2 equalizer (jib backstay strap)** (For more information see: Equalizer A-frame2 (jib backstay strap), page 253)	at 30° 10000 mm 32‘ 10“ ft-in
		at 15° 9090 mm 29‘ 10“ ft-in

Tab. 505: Backstay straps A-frame2 to main boom head 2821

LWN/LR.x/V03.01//Auslieferung/2015-06-03/en

copyright by LIEBHERR

Pendant straps A-frame2 to jib head 1713

Name			Value
X1	**A-frame2 equalizer (jib pendant strap)** (For more information see: Equalizer on A-frame2 (jib pendant strap), page 255)		7275 mm 23‘ 10“ ft-in
X	**Jib pendant straps** consisting of:		Total **X2** + Total **X3** + Total **X4**
	X2	**Jib pendant strap 3 m (10 ft)** (For more information see: Jib pendant strap 3 m (10 ft), page 256)	
	X3	**Jib pendant strap 6 m (20 ft)** (For more information see: Jib pendant strap 6 m (20 ft), page 257)	
	X4	**Jib pendant strap 12 m (40 ft)** (For more information see: Jib pendant strap 12 m (40 ft), page 258)	
X5	**Jib pendant strap on jib head 1713** (For more information see: Jib pendant strap on jib head 1713.21, page 259)		6500 mm 21‘ 4“ ft-in

Tab. 506: Pendant straps A-frame2 to jib head 1713

Configuration of jib pendant straps (X):

Required number of jib pendant straps 3 m (10 ft) (**X2**) corresponds to number of jib sections 3 m (10 ft).

Required number of jib pendant straps 6 m (20 ft) (**X3**) corresponds to number of jib sections 6 m (20 ft).

Required number of jib pendant straps 12 m (40 ft) (**X4**) corresponds to number of jib sections 12 m (40 ft).

Note

▶ For the admissible number of jib sections 3 m (10 ft), 6 m (20 ft), 12 m (40 ft), refer to the following table: (For more information see: 7.15.1 Configuration of jib, page 1484)

LWN/LR.x/V03.01//Auslieferung/2015-06-03/en

copyright by
LIEBHERR

7.15.4 Reeving diagrams for one rope across jib head 1713 (load position1)

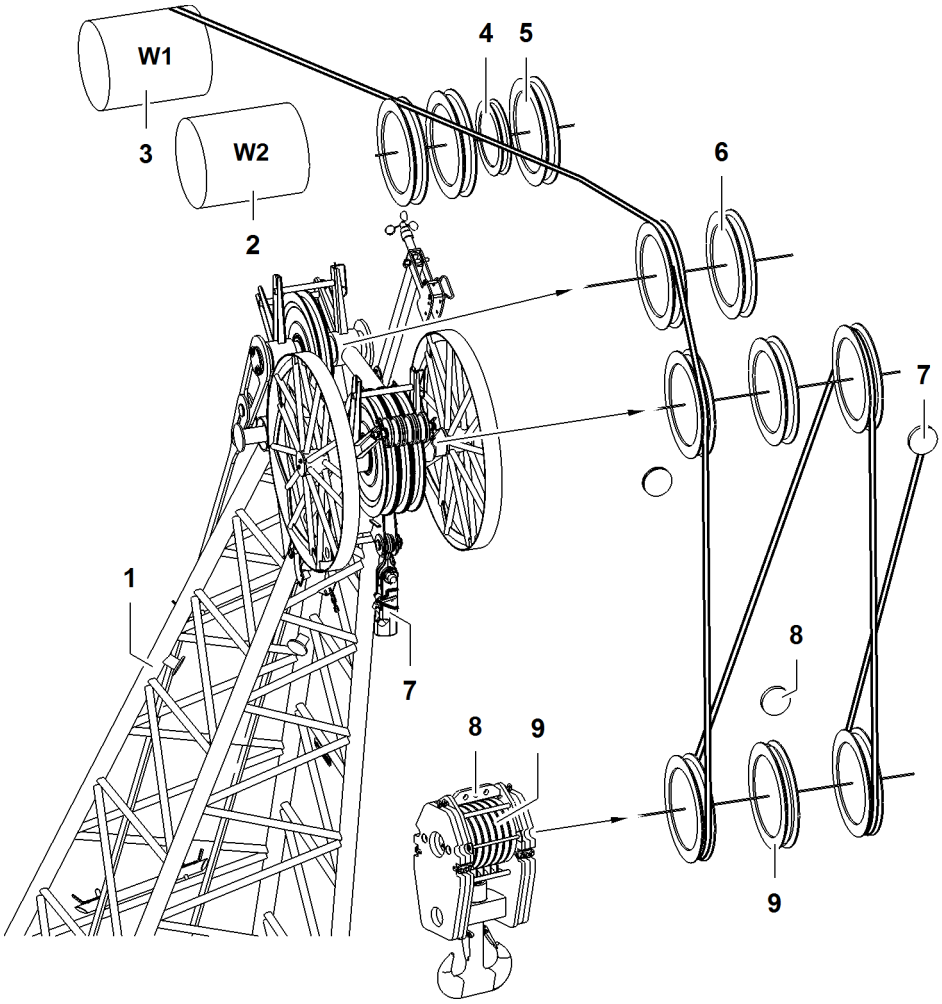

Fig. 4220: Reeving diagrams for one rope across jib head 1713 (load position1)

1	Jib head	**4**	Pulley for rope of jib luffing winch	**7**	Rope fixing point (2x) of jib head
2	Winch2	**5**	Gantry pulley (3x) of main boom head	**8**	Rope fixing points of pulley block
3	Winch1	**6**	Retrofit kit* for operation with two ropes across jib head	**9**	Pulley set of pulley block

DANGER
Incorrect number of reevings!
Structural breakdown, toppling of machine.

▶ Choose the correct number of reevings as per the load chart.

LWN/LR.x/V03.01//Auslieferung/2015-06-03/en

copyright by
LIEBHERR

Reeving diagrams for one rope across jib head 1713 (load position1)	
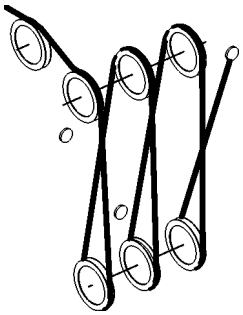 6x	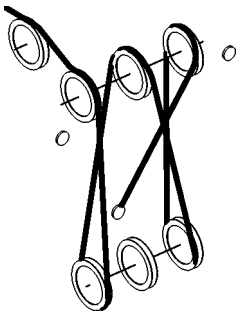 5x
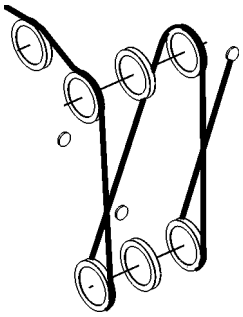 4x	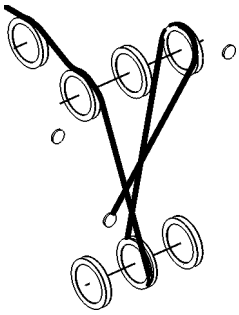 3x
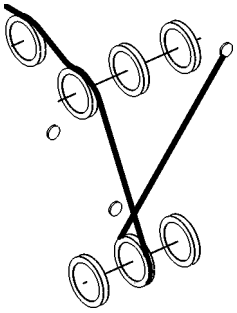 2x	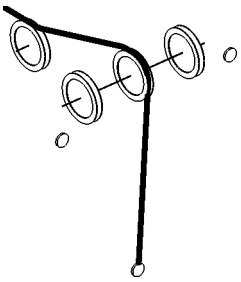 1x

Tab. 507: Reeving diagrams for one rope across jib head 1713 (load position1)

7.15.5 Reeving diagrams for two ropes across jib head 1713 (load position1)

DANGER
Inadmissible number of reevings!
Structural breakdown, toppling of machine.

▶ Choose correct number of reevings as indicated in load chart.

LWN/LR.x/V03.01//Auslieferung/2015-06-03/en

copyright by
LIEBHERR

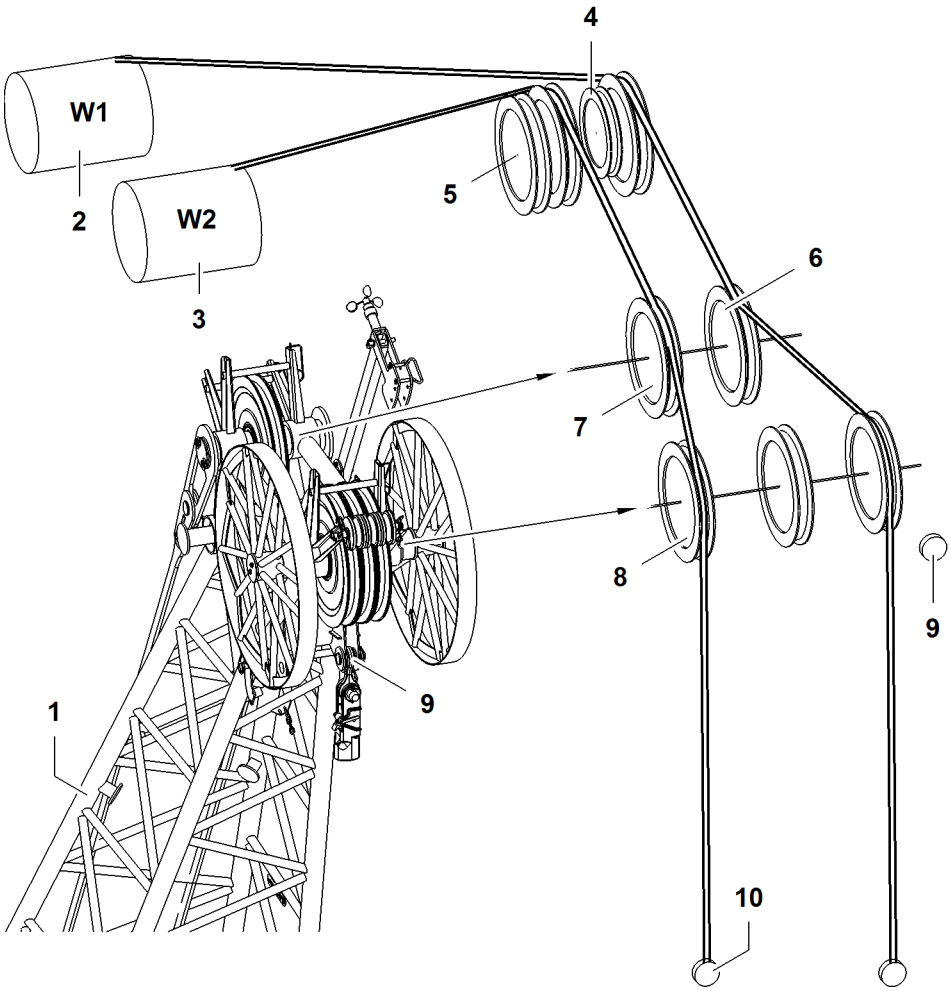

Fig. 4227: Reeving diagrams for two ropes across jib head 1713 (load position1)

1	Jib head	**5**	Gantry pulley (3x) of main boom head	**9**	Rope fixing point (2x) of jib head
2	Winch1	**6**	Retrofit kit* for operation with two ropes across jib head	**10**	Rope fixing points of pulley block
3	Winch2	**7**	Gantry pulley of jib head		
4	Pulley for rope of jib luffing winch	**8**	Pulley (3x) of jib head		

7.15.6 Reeving diagrams for one rope across main boom head 2821 (load position2)

If the main boom with jib attached is also used to lift a load, reeve main boom head 2821 as shown below.

LWN/LR.x/V03.01//Auslieferung/2015-06-03/en

copyright by
LIEBHERR

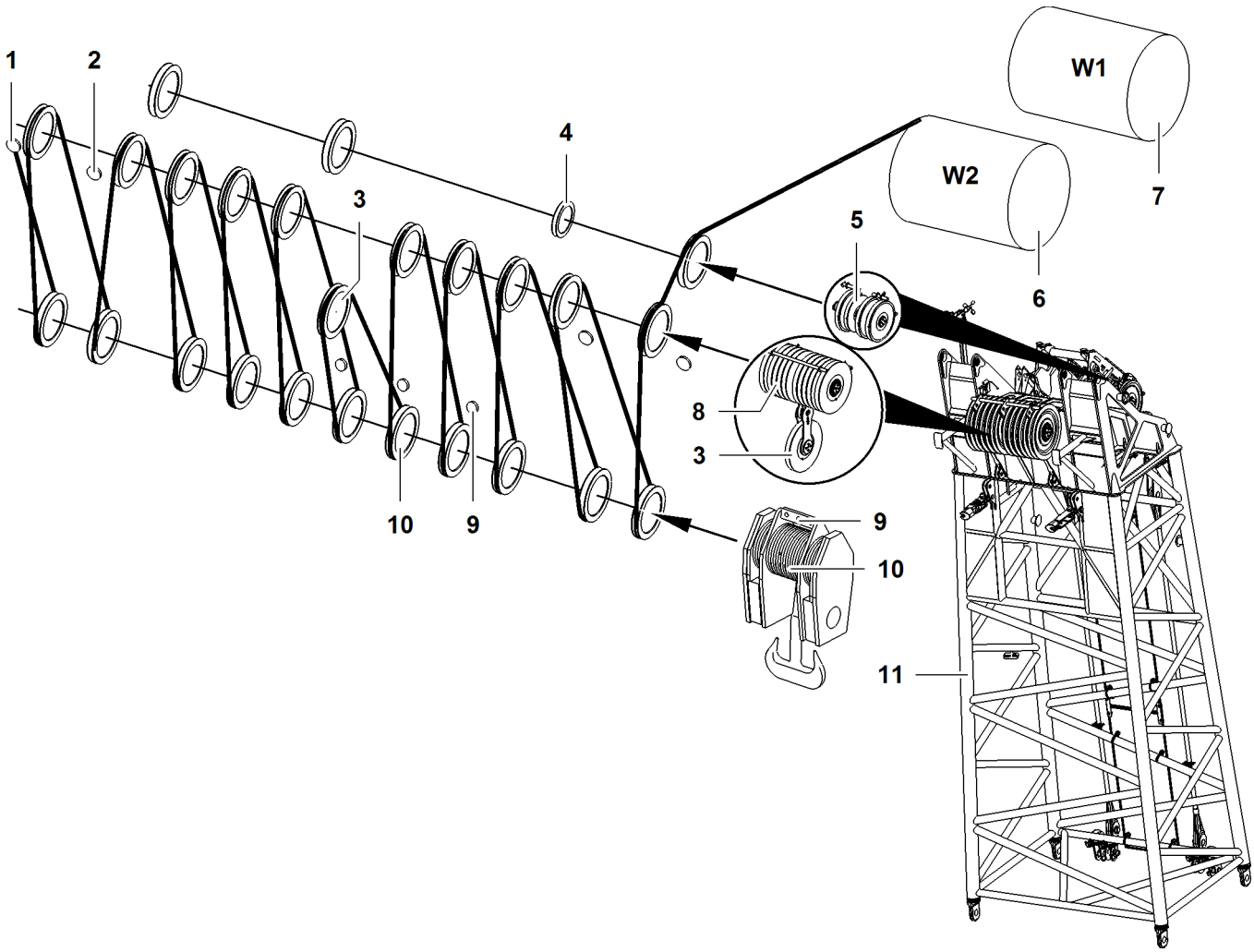

Fig. 4228: Reeving diagrams for one rope across main boom head 2821 (load position2)

1	Outer rope fixing point (2x) of main boom head	**5**	Gantry pulley (3x) of main boom head	**9**	Rope fixing points of pulley block
2	Inner rope fixing point (2x) of main boom head	**6**	Winch2	**10**	Pulley set of pulley block
3	11th pulley of main boom head	**7**	Winch1	**11**	Main boom head
4	Pulley for rope of jib luffing winch	**8**	Pulley (10x) of main boom head		

DANGER
Inadmissible number of reevings!
Structural breakdown, toppling of machine.

▶ Choose correct number of reevings as indicated in load chart.

LWN/LR.x/V03.01//Auslieferung/2015-06-03/en

copyright by
LIEBHERR

Reeving diagrams for one rope across main boom head 2821 (load position2)	
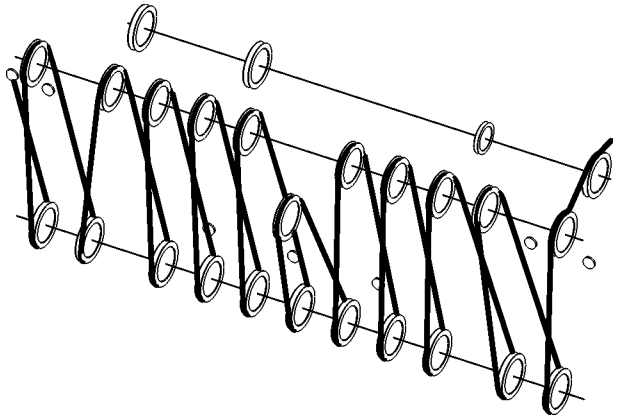 22x	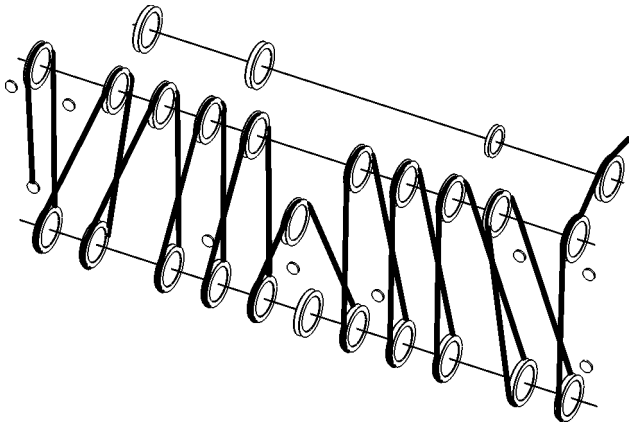 21x
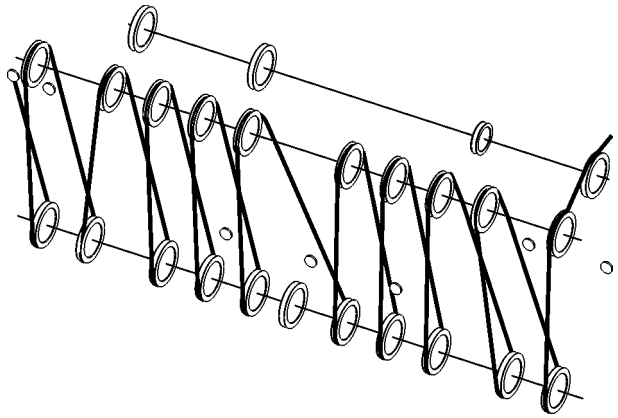 20x	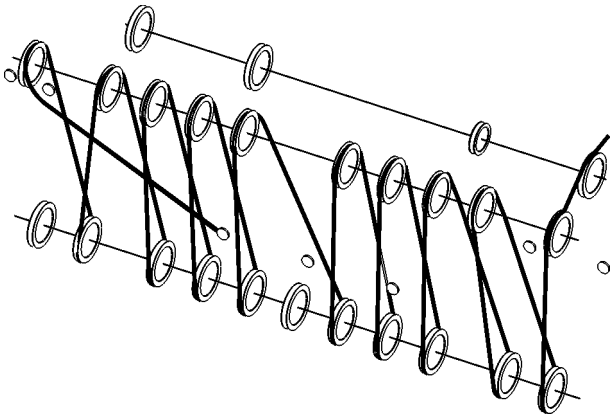 19x
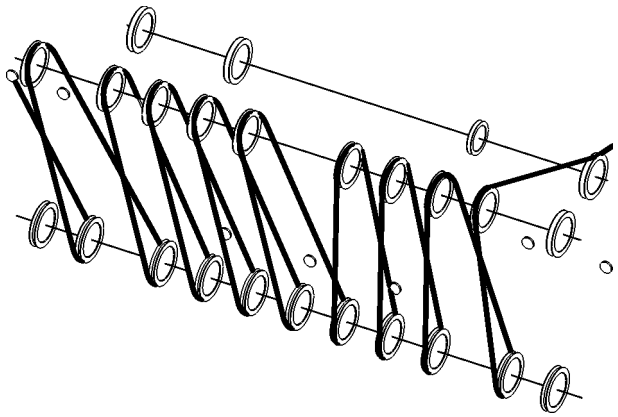 18x	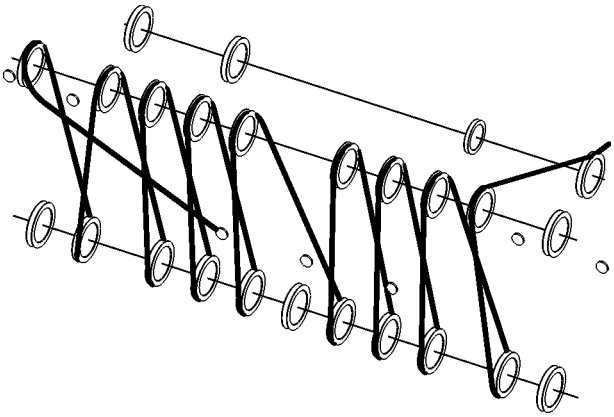 17x

LWN/LR.x/V03.01//Auslieferung/2015-06-03/en

copyright by
LIEBHERR

Reeving diagrams for one rope across main boom head 2821 (load position2)	
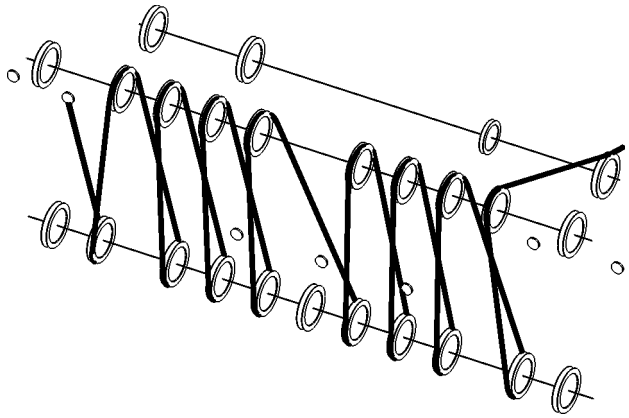 16x	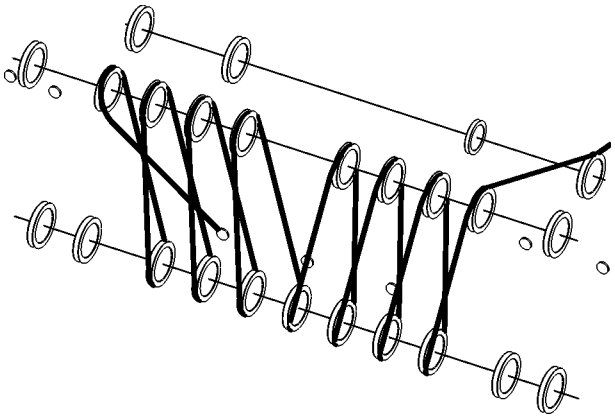 15x
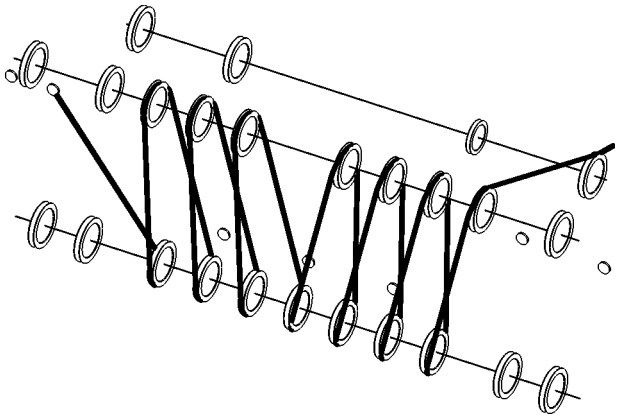 14x	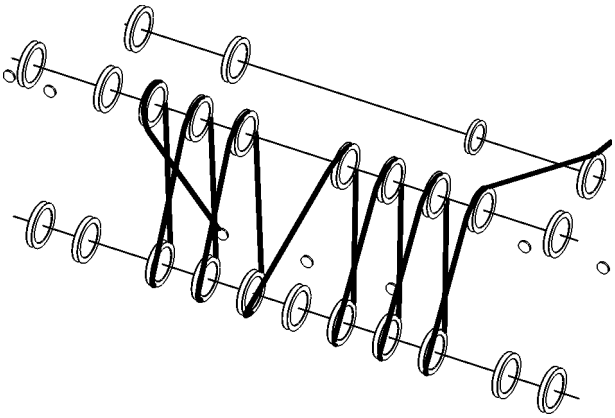 13x
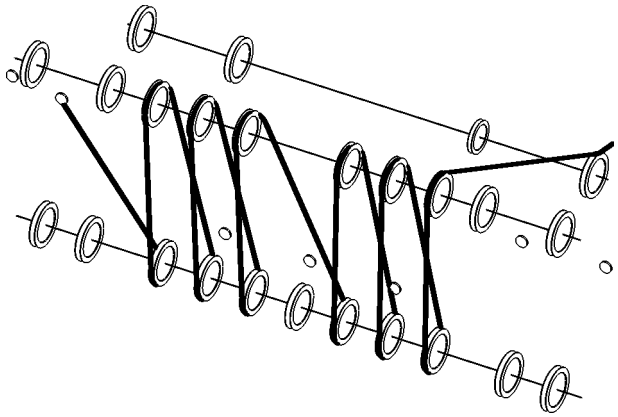 12x	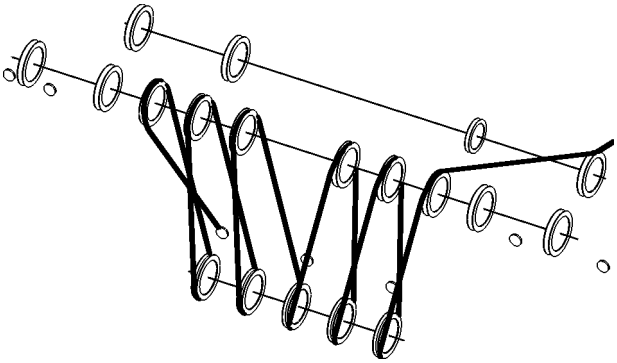 11x
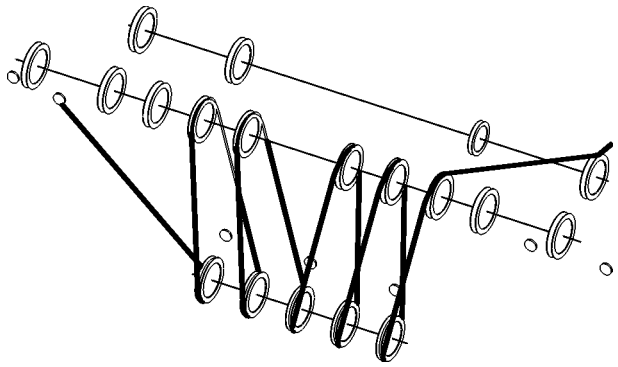 10x	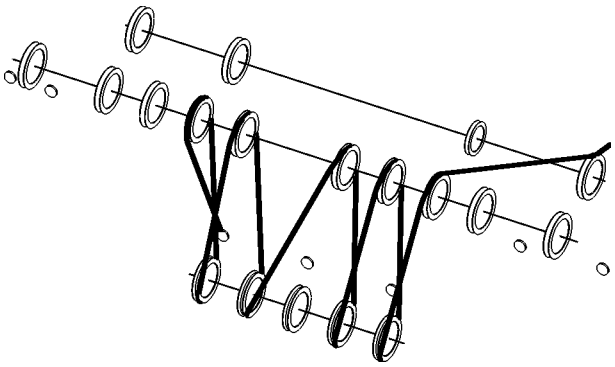 9x

LWN/LR.x/V03.01//Auslieferung/2015-06-03/en

copyright by LIEBHERR

Reeving diagrams for one rope across main boom head 2821 (load position2)	
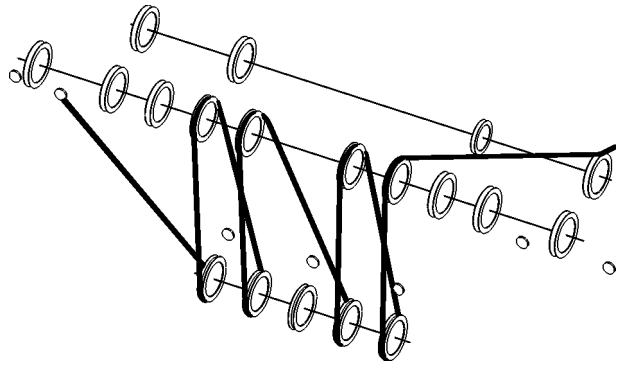 8x	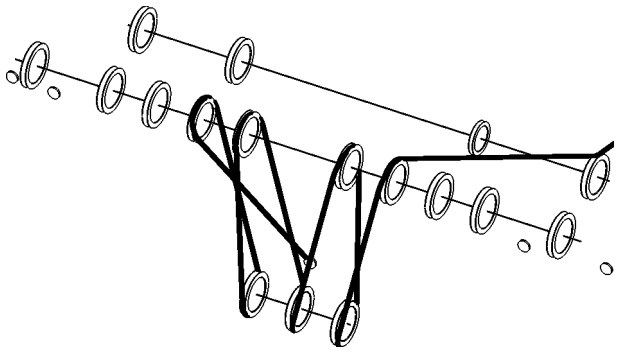 7x
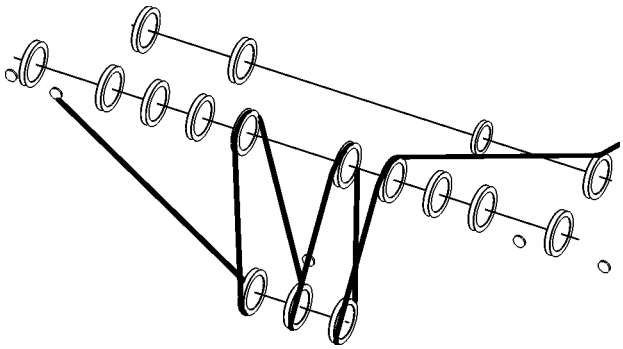 6x	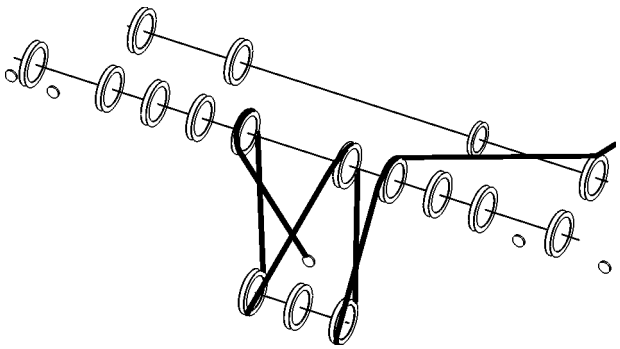 5x
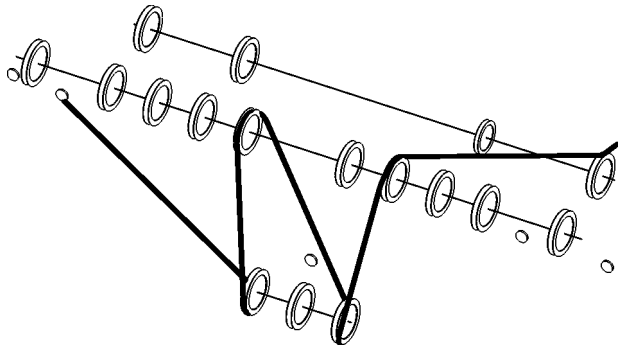 4x	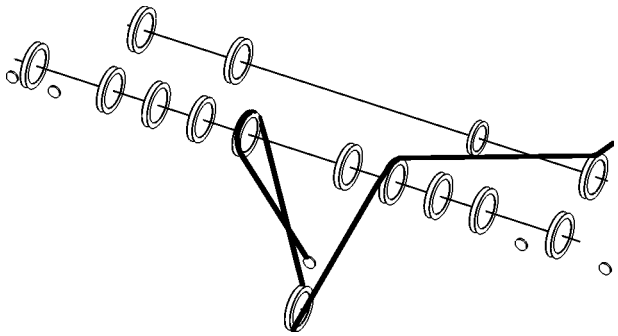 3x
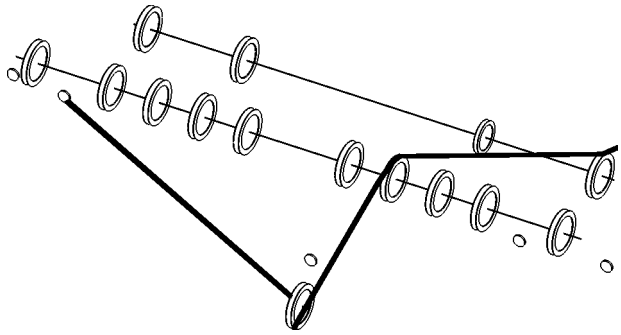 2x	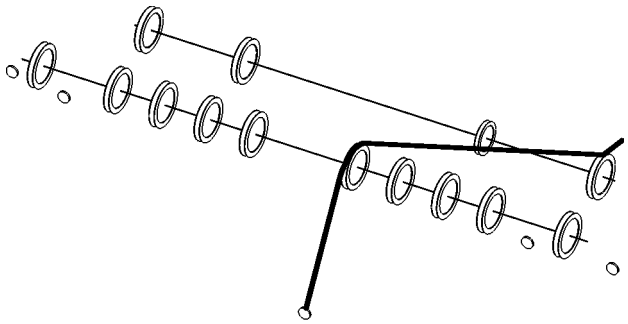 1x

Tab. 508: Reeving diagrams for one rope across main boom head 2821 (load position2)

LWN/LR.x/V03.01//Auslieferung/2015-06-03/en

copyright by LIEBHERR

7.16 Fixed jib 1507

System-relevant information for fixed jib 1507:
- Configuration of jib
- Configuration of main boom
  - Rope guide installation position
  - Mid-point suspensions installation positions
  - Spacer bracket installation position
- Lengths of mid-point suspensions
- Composition of main boom in derrick mode with fixed jib 1507 attached
  - Rope guide installation position
  - Mid-point suspensions installation positions
  - Spacer bracket installation position
- Length of mid-point suspension in derrick mode with installed fixed jib 1507
- Overview of pendant straps on fixed jib 1507
- Reeving diagrams for one rope across jib head 1507 (load position1)
- Reeving diagrams for two ropes across jib head 1507 (load position1)
- Reeving diagrams for one rope across main boom head 2821 (load position2)

7.16.1 Configuration of jib

The fixed jib 1507 has a fixed length of 8 m (26 ft).

Jib length	Configuration of jib (symbolic)
8 m 26 ft	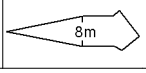

Tab. 509: Configuration of fixed jib 1507

7.16.2 Configuration of main boom

System-relevant information for main boom 2821 with installed fixed jib 1507:
- Configuration of main boom
  - Installation position of rope guide (type A)
  - Mid-point suspensions installation positions
  - Spacer bracket installation positions
- Lengths of mid-point suspensions

DANGER
Excess length of main boom!
Structural breakdown.

▶ Check main boom length in load chart for validity.

Main boom length	Configuration of main boom (symbolic)
50 m 164 ft	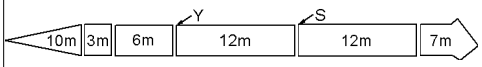
53 m 174 ft	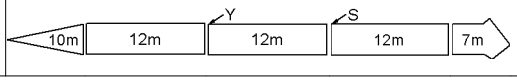

LWN/LR.x/V03.01/Auslieferung/2015-06-03/en

copyright by
LIEBHERR

Main boom length	Configuration of main boom (symbolic)
56 m 184 ft	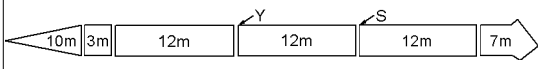
59 m 195 ft	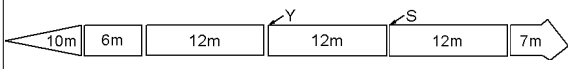
62 m 203 ft	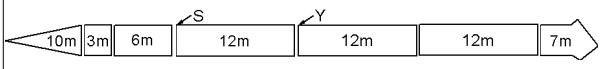
65 m 213 ft	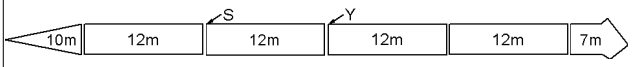
68 m 223 ft	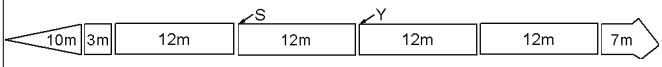
71 m 233 ft	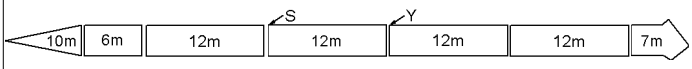
74 m 243 ft	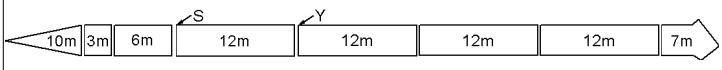
77 m 253 ft	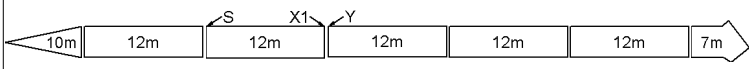
80 m 262 ft	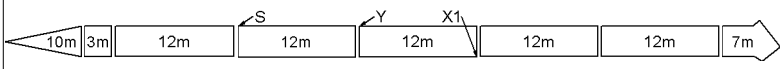
83 m 272 ft	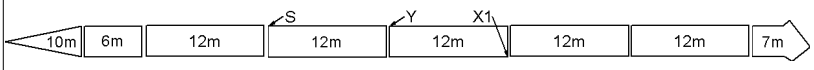
86 m 282 ft	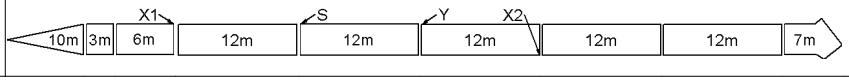

Tab. 510: Configuration of main boom 2821 with fixed jib 1507 attached

S - Installation position rope guide (type A)

X1 - Installation position mid-point suspension 1

X2 - Installation position mid-point suspension 2

Y - Installation position of spacer bracket with jib backstay straps (CF) on fixed jib 1507

7.16.3 Lengths of mid-point suspensions

Main boom length	Backstay pendant 1 (X1)	Backstay pendant 2 (X2)
	Rope length	Rope length
77 m 253 ft A)	3.7 m 12‘ 2“ ft-in = 2.1 m (6‘ 11“ ft-in) + 1.6 m (5‘ 3“ ft-in)	
80 m 262 ft B)	4.2 m 13‘ 9“ ft-in = 1.6 m (5‘ 3“ ft-in) + 2.6 m (8‘ 6“ ft-in)	

LWN/LR.x/V03.01//Auslieferung/2015-06-03/en

copyright by
LIEBHERR

Main boom length	Backstay pendant 1 (X1)	Backstay pendant 2 (X2)
	Rope length	Rope length
83 m 272 ft C)	4.2 m 13‘ 9“ ft-in = 1.6 m (5‘ 3“ ft-in) + 2.6 m (8‘ 6“ ft-in)	
86 m 282 ft D)	5.6 m 18‘ 4“ ft-in = 3.0 m (9‘ 10“ ft-in) + 2.6 m (8‘ 6“ ft-in)	4.2 m 13‘ 9“ ft-in = 2.6 m (8‘ 6“ ft-in) + 1.6 m (5‘ 3“ ft-in)

Tab. 511: Lengths of mid-point suspensions - 2821 main boom with 1507 fixed jib attached

A) Jib backstay straps run within the ropes of the mid-point suspension for a main boom length of 77 m (253 ft).
B) Jib backstay straps run outside the ropes of the mid-point suspension for a main boom length of 80 m (262 ft).
C) Jib backstay straps run outside the ropes of the mid-point suspension for a main boom length of 83 m (272 ft).
D) Jib backstay straps run inside the ropes of the mid-point suspension with mid-point suspension 1 and outside them with mid-point suspension 2 on X2 with a main boom length of 86 m (282 ft).

7.16.4 Composition of main boom in derrick mode with fixed jib 1507 attached

DANGER
Excess length of main boom!
Structural breakdown.

▶ Check main boom length in load chart for validity.

Main boom length	Configuration of main boom (symbolic)
41 m 134 ft	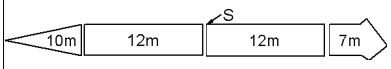
44 m 144 ft	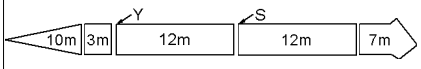
47 m 154 ft	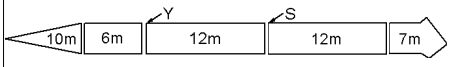
50 m 164 ft	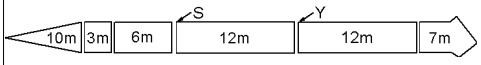
53 m 174 ft	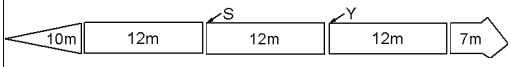
56 m 184 ft	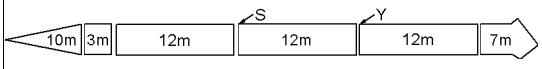
59 m 195 ft	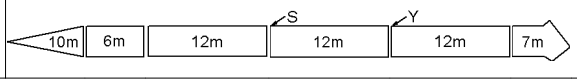

LWN/LR.x/V03.01//Auslieferung/2015-06-03/en

copyright by
LIEBHERR

Main boom length	Configuration of main boom (symbolic)
62 m 203 ft	10m, 3m, 6m, S, 12m, 12m, Y, 12m, 7m
65 m 213 ft	10m, 12m, S, 12m, 12m, Y, 12m, 7m
68 m 223 ft	10m, 3m, 12m, S, 12m, 12m, Y, 12m, 7m
71 m 233 ft	10m, 6m, 12m, S, 12m, 12m, Y, 12m, 7m
74 m 243 ft	10m, 3m, 6m, S, 12m, 12m, 12m, Y, 12m, 7m
77 m 253 ft	10m, 12m, S, 12m, 12m, Y, 12m, 12m, 7m
80 m 262 ft	10m, 3m, 12m, S, 12m, 12m, Y, 12m, 12m, 7m
83 m 272 ft	10m, 6m, 12m, S, 12m, 12m, Y, 12m, 12m, 7m
86 m 282 ft	10m, 3m, 6m, S, 12m, 12m, 12m, Y, 12m, 12m, 7m
89 m 292 ft	10m, 12m, S, 12m, 12m, 12m, Y, 12m, 12m, 7m
92 m 302 ft	10m, 3m, 12m, S, 12m, 12m, 12m, Y, 12m, 12m, 7m
95 m 312 ft	10m, 6m, 12m, S, 12m, 12m, Y, 12m, X1, 12m, 12m, 7m
98 m 322 ft	10m, 3m, 6m, S, 12m, 12m, 12m, Y, 12m, X1, 12m, 12m, 7m
101 m 332 ft	10m, 12m, S, 12m, 12m, 12m, Y, 12m, X1, 12m, 12m, 7m
104 m 342 ft	10m, 3m, 12m, S, 12m, 12m, 12m, X1, 12m, Y, 12m, 12m, 7m
107 m 351 ft	10m, 6m, 12m, S, 12m, 12m, 12m, X1, 12m, Y, 12m, 12m, 7m
110 m 361 ft	10m, 3m, 6m, S, 12m, 12m, 12m, 12m, X1, 12m, Y, 12m, 12m, 7m
113 m 371 ft	10m, 12m, S, 12m, 12m, 12m, 12m, X1, 12m, Y, 12m, 12m, 7m

Tab. 512: Composition of main boom 2821 in derrick mode with fixed jib 1507 attached

S - Installation position rope guide (type B)

X1 - Installation position mid-point suspension 1

Y - Installation position of spacer bracket with jib backstay straps (CF) on fixed jib 1507

LWN/LR.x/V03.01//Auslieferung/2015-06-03/en

copyright by LIEBHERR

7.16.5 Length of midpoint suspension in derrick mode with installed fixed jib 1507

Main boom length	Backstay pendant 1 (X1)
	Rope length
95 m 312 ft	7.2 m 23‘ 7“ ft-in = 2.1 m (6‘ 11“ ft-in) + 2.1 m (6‘ 11“ ft-in) + 3.0 m (9‘ 10“ ft-in)
98 m 322 ft	6.9 m 22‘ 8“ ft-in = 1.6 m (5‘ 3“ ft-in) + 1.6 m (5‘ 3“ ft-in) + 1.6 m (5‘ 3“ ft-in) + 2.1 m (6‘ 11“ ft-in)
101 m 332 ft	6.7 m 22‘ ft-in = 1.6 m (5‘ 3“ ft-in) + 2.1 m (6‘ 11“ ft-in) + 3.0 m (9‘ 10“ ft-in)
104 m 342 ft	9.2 m 30‘ 2“ ft-in = 1.6 m (5‘ 3“ ft-in) + 1.6 m (5‘ 3“ ft-in) + 3.0 m (9‘ 10“ ft-in) + 3.0 m (9‘ 10“ ft-in)
107 m 351 ft	8.9 m 29‘ 2“ ft-in = 1.6 m (5‘ 3“ ft-in) + 2.1 m (6‘ 11“ ft-in) + 2.6 m (8‘ 6“ ft-in) + 2.6 m (8‘ 6“ ft-in)
110 m 361 ft	8.8 m 28‘ 10“ ft-in = 1.6 m (5‘ 3“ ft-in) + 2.1 m (6‘ 11“ ft-in) + 2.1 m (6‘ 11“ ft-in) + 3.0 m (9‘ 10“ ft-in)
113 m 371 ft	8.6 m 28‘ 3“ ft-in = 2.6 m (8‘ 6“ ft-in) + 3.0 m (9‘ 10“ ft-in) + 3.0 m (9‘ 10“ ft-in)

Tab. 513: Lengths of mid-point suspensions - 2821 main boom in derrick operation with 1507 fixed jib attached

LWN/LR.x/V03.01//Auslieferung/2015-06-03/en

copyright by
LIEBHERR

7.16.6 Overview of pendant straps on fixed jib 1507

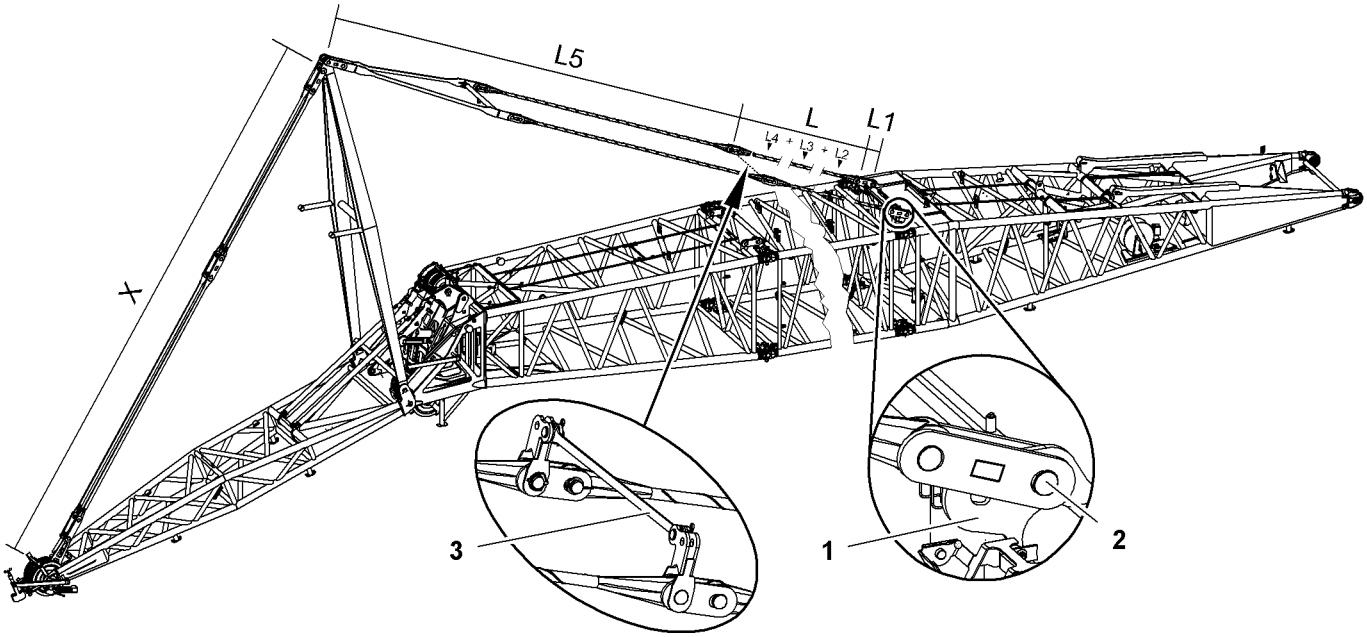

Fig. 4532: Overview of pendant straps on fixed jib 1507

1 Main boom base section

2 Pin connection point for jib backstay straps

3 Spacer bracket with connecting elements

Jib backstay straps A-frame2 to main boom base section 2821

Name			Value
L1	**Connecting link** (For more information see: Connecting link, page 200)		350 mm 1‘ 2“ ft-in
L	**Jib backstay straps** consisting of:		Total **L2** + Total **L3** + Total **L4**
	L2	**Jib backstay strap 3 m (10 ft)** (For more information see: Jib backstay strap 3 m (10 ft), page 202)	
	L3	**Jib backstay strap 6 m (20 ft)** (For more information see: Jib backstay strap 6 m (20 ft), page 206)	
	L4	**Jib backstay strap 12 m (40 ft)** (For more information see: Jib backstay strap 12 m (40 ft), page 210)	
L5	**A-frame2 equalizer (jib backstay strap)** (For more information see: Equalizer A-frame2 (jib backstay strap), page 262)		9980 mm 32‘ 9“ ft-in

Tab. 514: Jib backstay straps A-frame2 to main boom base section 2821

Configuration of jib backstay straps (L):

Required number of jib backstay straps 3 m (10 ft) (**L2**) corresponds to number of main boom sections 3 m (10 ft).

Required number of jib backstay straps 6 m (20 ft) (**L3**) corresponds to number of main boom sections 6 m (20 ft).

LWN/LR.x/V03.01//Auslieferung/2015-06-03/en

copyright by LIEBHERR

Required number of jib backstay straps 12 m (40 ft) (**L4**) corresponds to number of main boom sections 12 m (40 ft).

Note

▶ For the admissible number of main boom sections 3 m (10 ft), 6 m (20 ft), 12 m (40 ft), refer to the load chart.

The jib backstay straps **(L)** may consist of generation A and generation B jib backstay straps (For more information see: 1.16.2 Steel pendant straps on fixed jib 1507, page 262) . Mixing is only admissible if the number of generation B jib backstay straps only differs by at most 1 in the left and the right strand of the backstay straps.

DANGER
Inadmissible mixing of generation A and generation B jib backstay straps!
Structural breakdown.

▶ Ensure that the number of generation B jib backstay straps differs by at most 1 in the left and the right strand of the backstay straps.

Pendant straps A-frame2 to jib head 1507

Name		Value
X	**Jib pendant strap (A-frame2 to jib head 1507)** (For more information see: Jib pendant strap (A-frame2 to jib head 1507), page 264)	11615 mm 38‘ 1“ ft-in

Tab. 515: Pendant straps A-frame2 to jib head 1507

LWN/LR.x/V03.01//Auslieferung/2015-06-03/en

copyright by
LIEBHERR

7.16.7 Reeving diagrams for one rope across jib head 1507 (load position1)

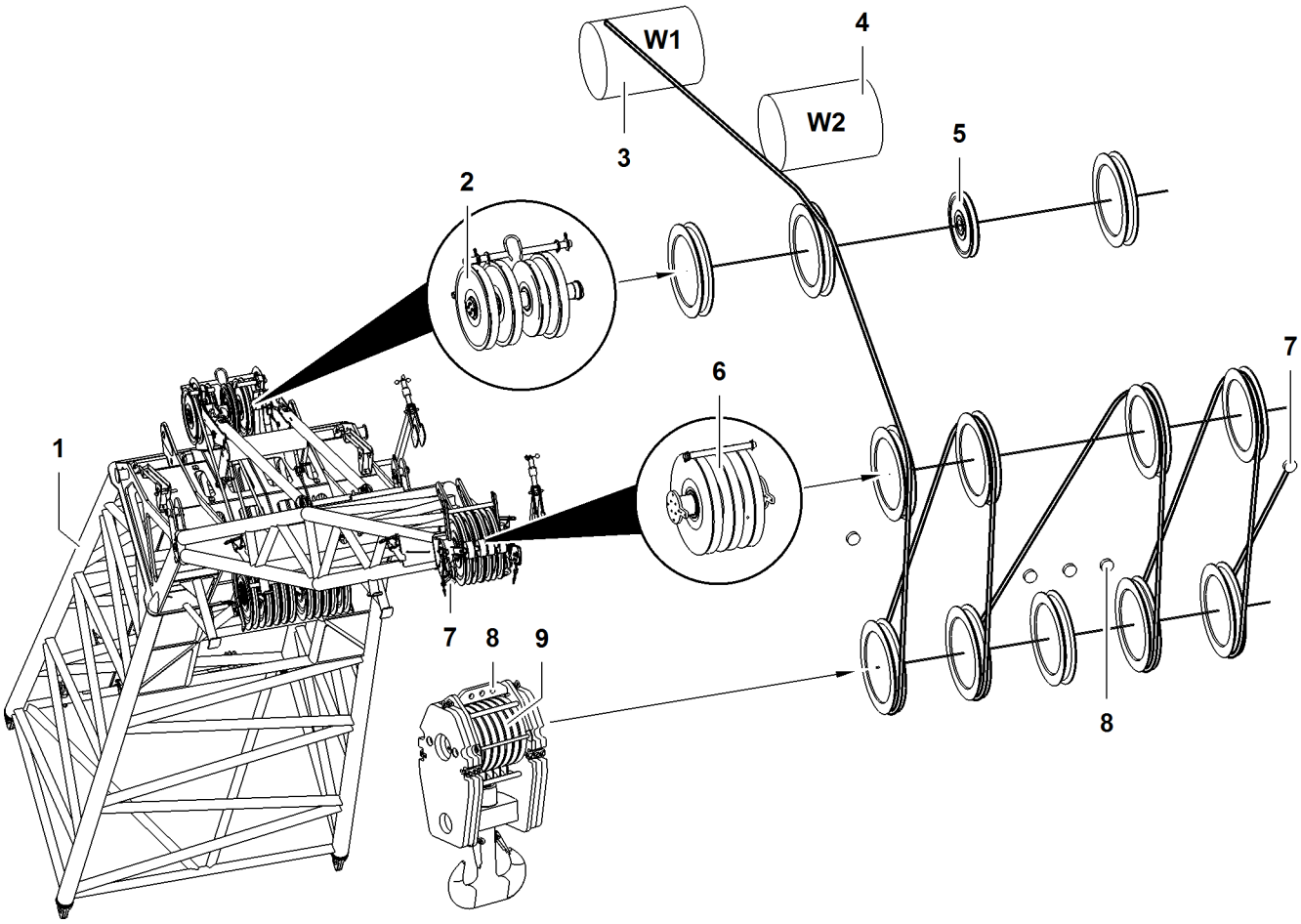

Fig. 4533: Reeving diagrams for one rope across jib head 1507 (load position1)

1	Main boom head	**4**	Winch2	**7**	Rope fixing point (2x) of jib head
2	Gantry pulley (3x) of main boom head	**5**	Pulley for rope of jib luffing winch	**8**	Rope fixing points of pulley block
3	Winch1	**6**	Pulley (4x) of jib head	**9**	Pulley set of pulley block

DANGER
Inadmissible number of reevings!
Structural breakdown, toppling of machine.

▶ Choose correct number of reevings as indicated in load chart.

LWN/LR.x/V03.01//Auslieferung/2015-06-03/en

copyright by
LIEBHERR

Reeving diagrams for one rope across jib head 1507 (load position1)	
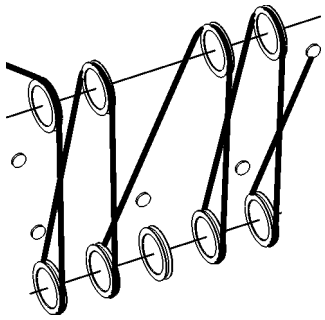 8x	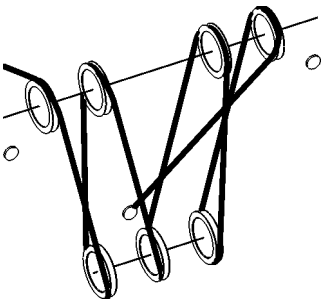 7x
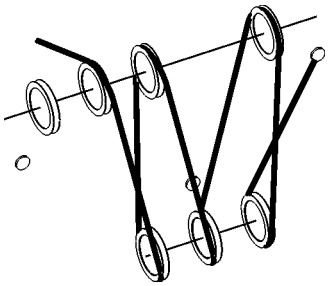 6x	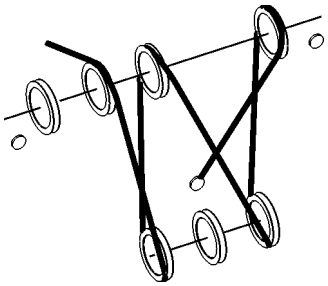 5x
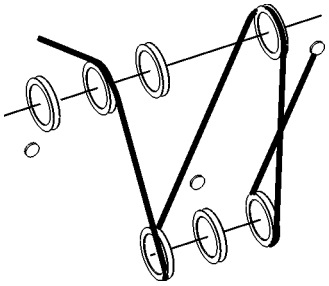 4x	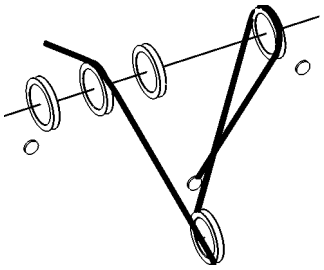 3x
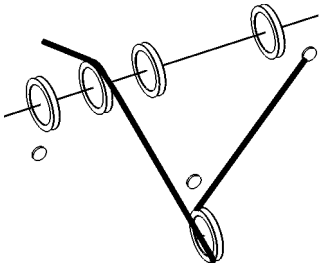 2x	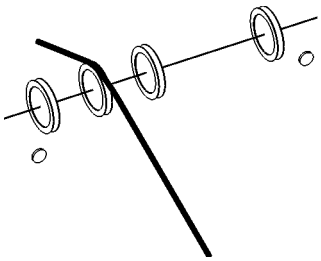 1x

Tab. 516: Reeving diagrams for one rope across jib head 1507 (load position1)

LWN/LR.x/V03.01//Auslieferung/2015-06-03/en

copyright by
LIEBHERR

7.16.8 Reeving diagrams for two ropes across jib head 1507 (load position1)

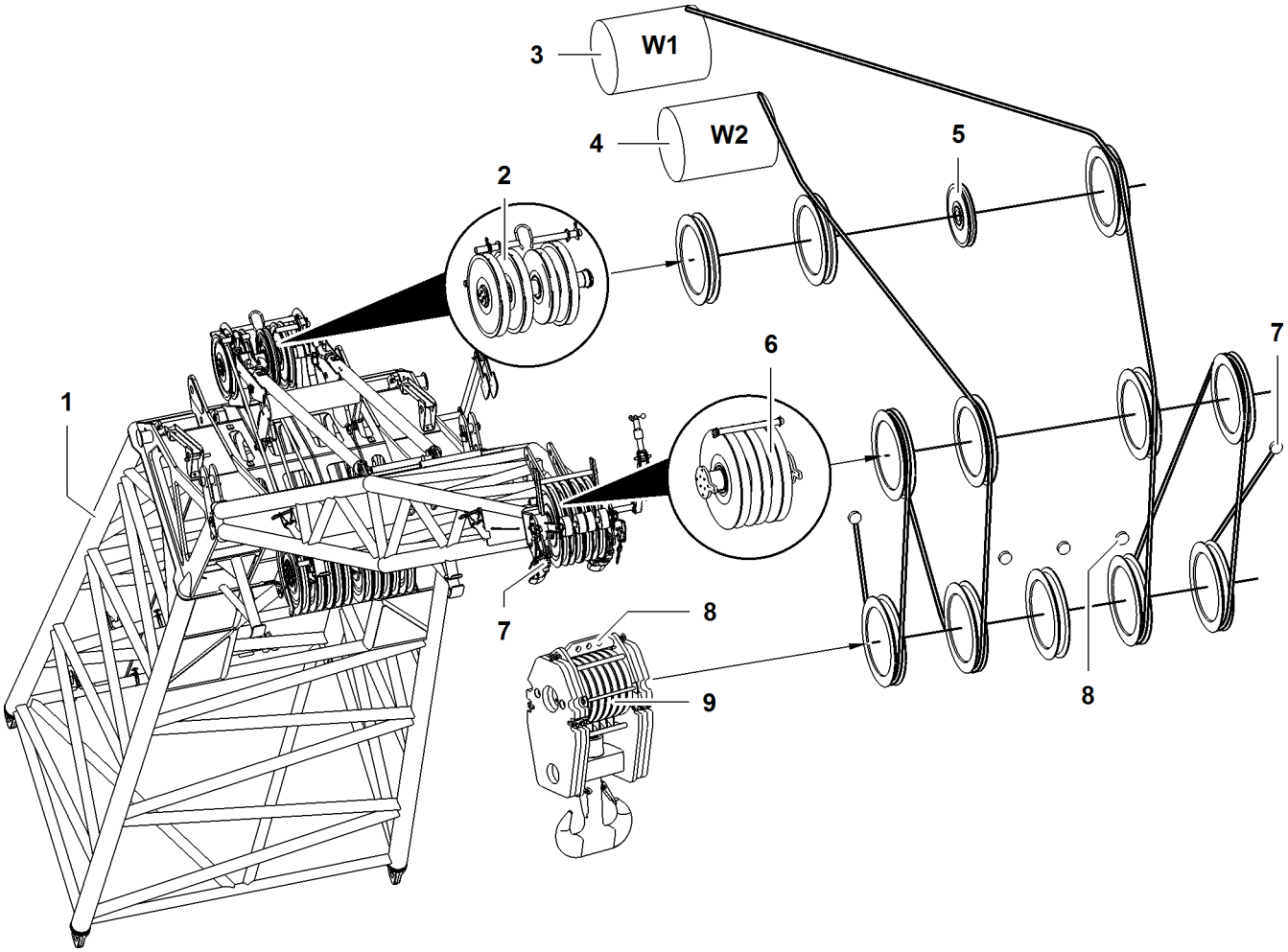

Fig. 4542: Reeving diagrams for two ropes across jib head 1507 (load position1)

1	Main boom head	**4**	Winch2	**7**	Rope fixing point (2x) of jib head
2	Gantry pulley (3x) of main boom head	**5**	Pulley for rope of jib luffing winch	**8**	Rope fixing points of pulley block
3	Winch1	**6**	Pulley (4x) of jib head	**9**	Pulley set of pulley block

LWN/LR.x/V03.01//Auslieferung/2015-06-03/en

copyright by
LIEBHERR

Reeving diagrams for two ropes across jib head 1507 (load position1)	
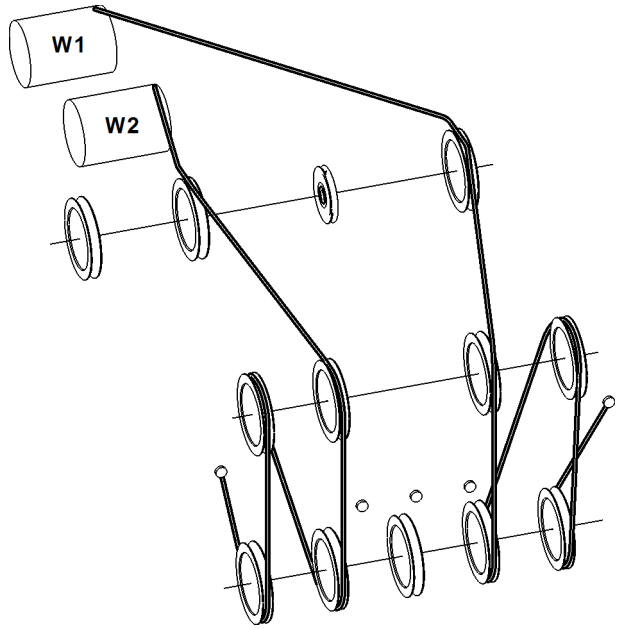 8x	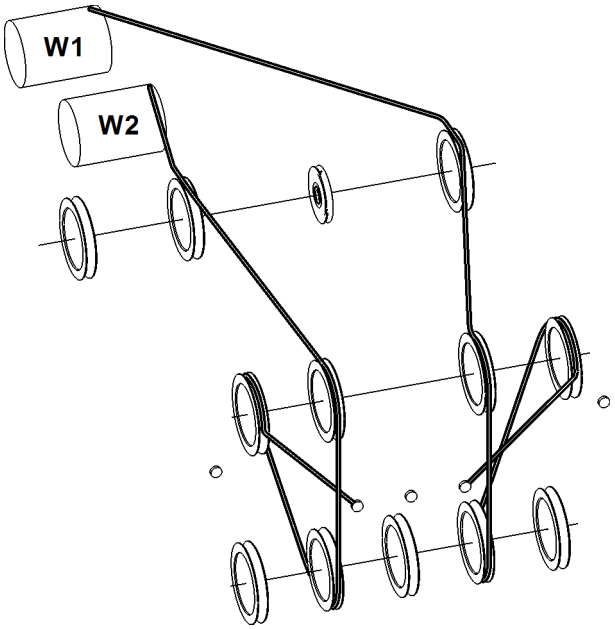 6x
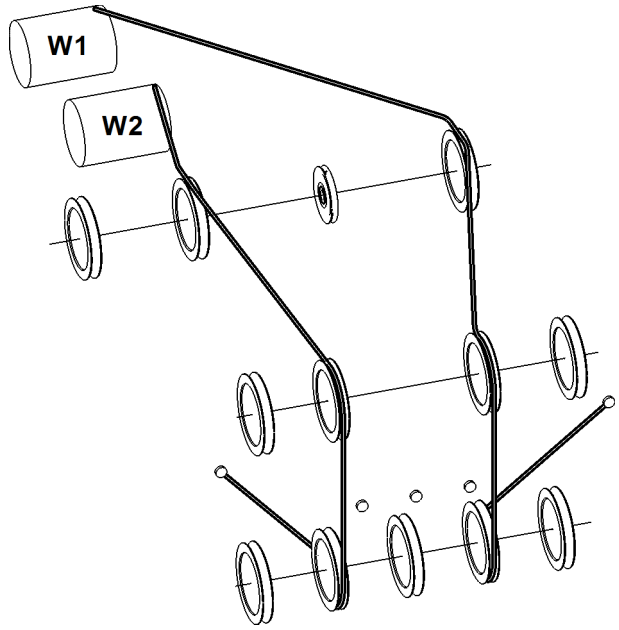 4x	

Tab. 517: Reeving diagrams for two ropes across jib head 1507 (load position1)

7.16.9 Reeving diagrams for one rope across main boom head 2821 (load position2)

If the main boom with jib attached is also used to lift a load, reeve main boom head 2821 as shown below.

LWN/LR.x/V03.01//Auslieferung/2015-06-03/en

copyright by
LIEBHERR

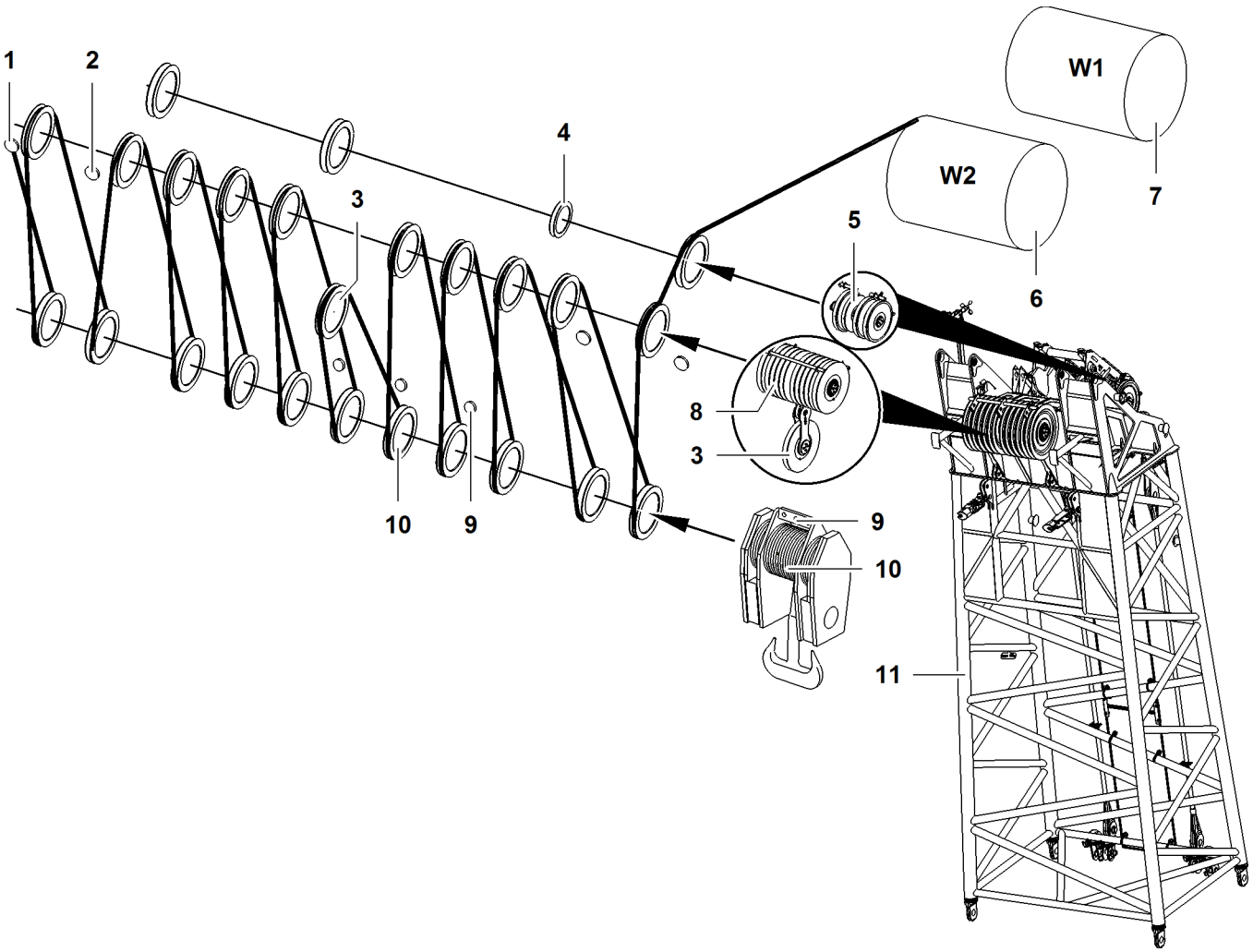

Fig. 4546: Reeving diagrams for one rope across main boom head 2821 (load position2)

1	Outer rope fixing point (2x) of main boom head	**5**	Gantry pulley (3x) of main boom head	**9**	Rope fixing points of pulley block
2	Inner rope fixing point (2x) of main boom head	**6**	Winch2	**10**	Pulley set of pulley block
3	11th pulley of main boom head	**7**	Winch1	**11**	Main boom head
4	Pulley for rope of jib luffing winch	**8**	Pulley (10x) of main boom head		

DANGER
Inadmissible number of reevings!
Structural breakdown, toppling of machine.

▶ Choose correct number of reevings as indicated in load chart.

LWN/LR.x/V03.01//Auslieferung/2015-06-03/en

copyright by
LIEBHERR

Reeving diagrams for one rope across main boom head 2821 (load position2)	
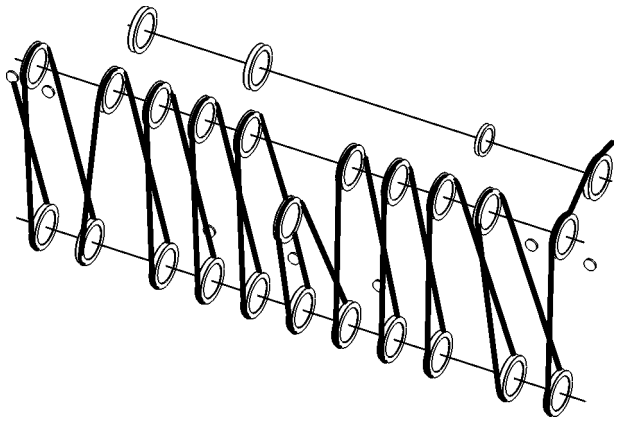 22x	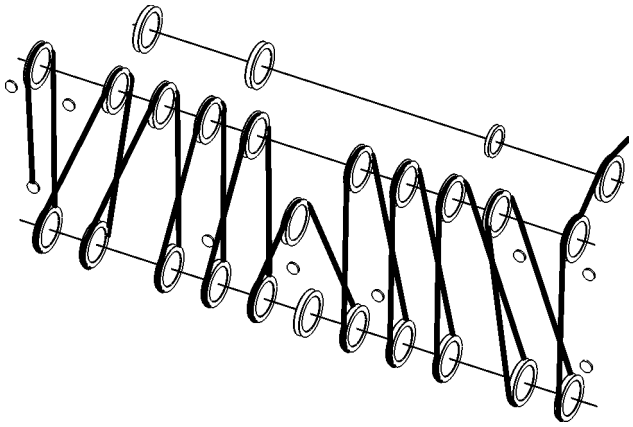 21x
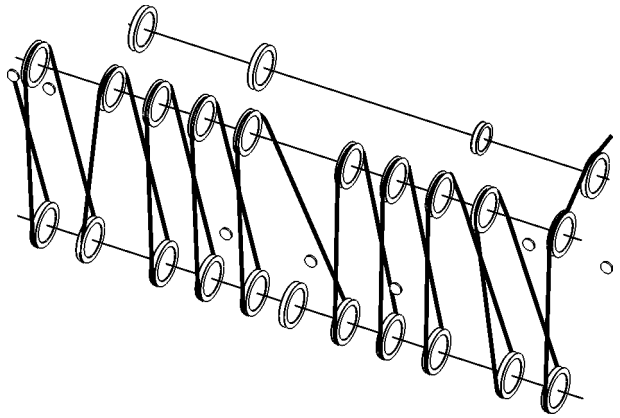 20x	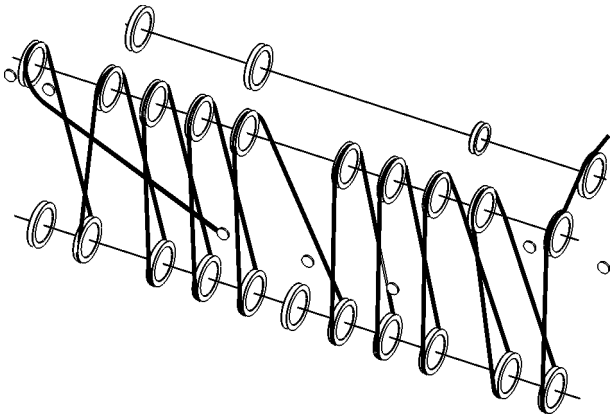 19x
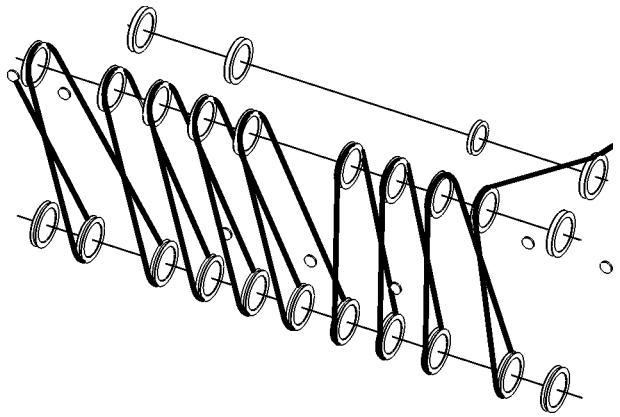 18x	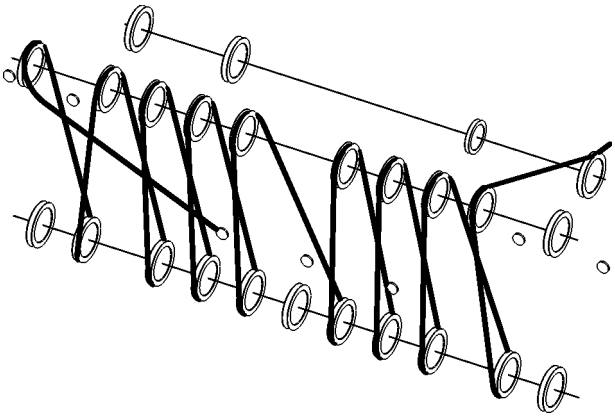 17x

LWN/LR.x/V03.01//Auslieferung/2015-06-03/en

copyright by LIEBHERR

Reeving diagrams for one rope across main boom head 2821 (load position2)	
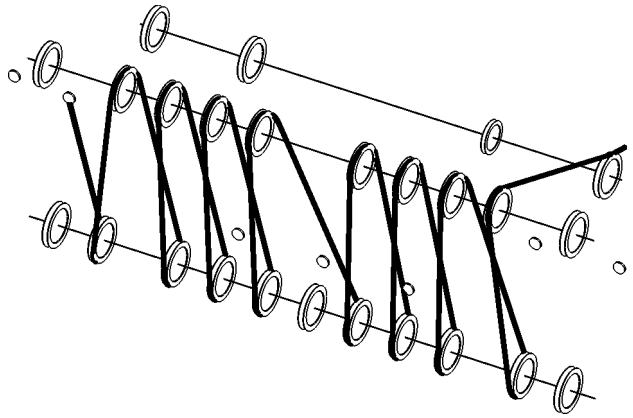 16x	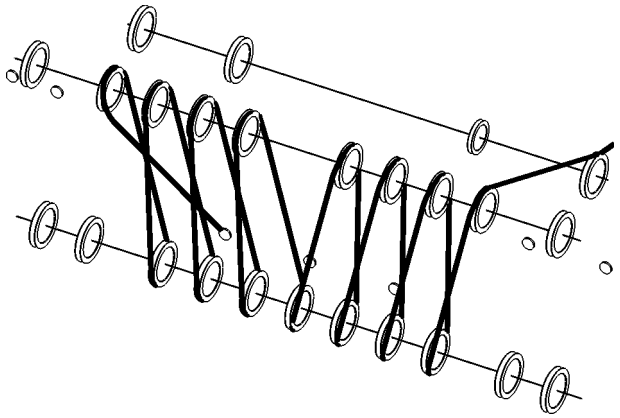 15x
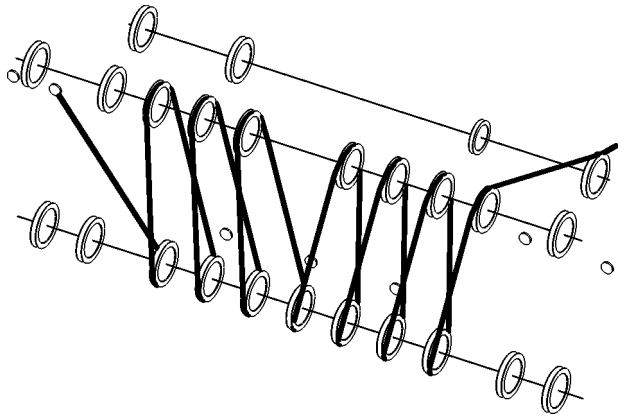 14x	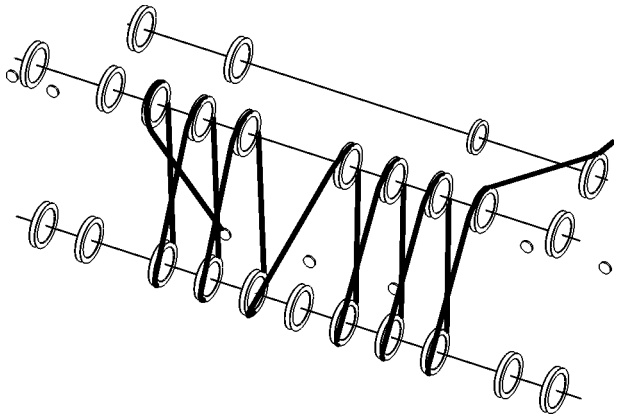 13x
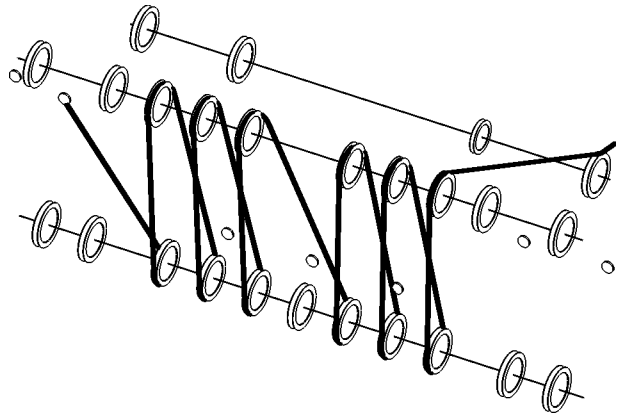 12x	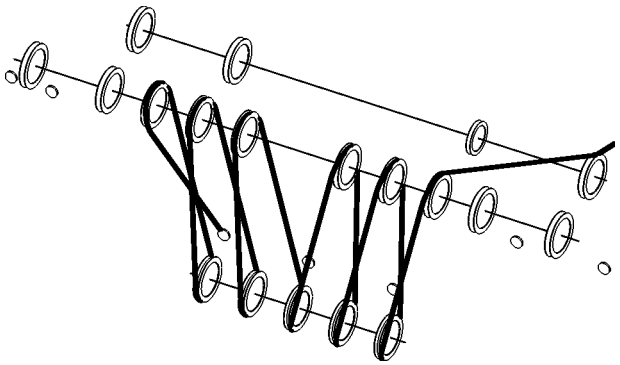 11x
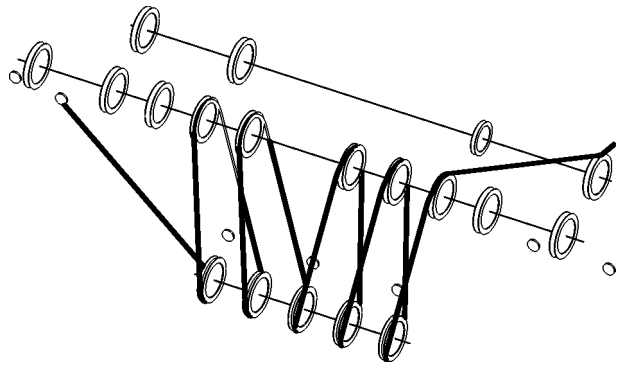 10x	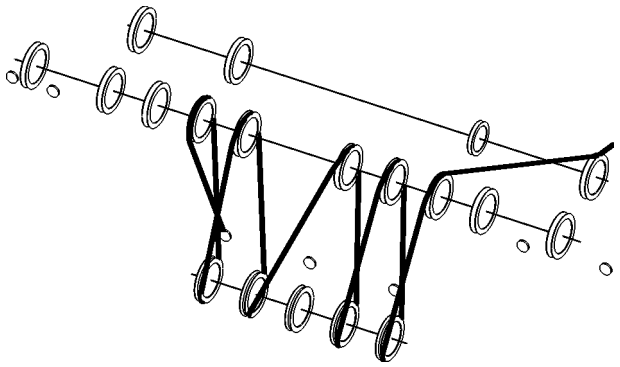 9x

LWN/LR.x/V03.01//Auslieferung/2015-06-03/en

copyright by
LIEBHERR

Reeving diagrams for one rope across main boom head 2821 (load position2)	
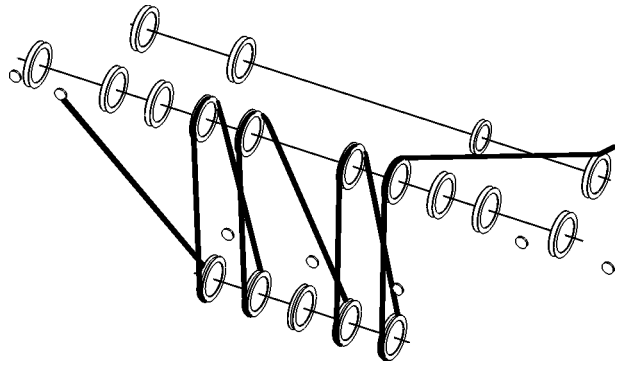 8x	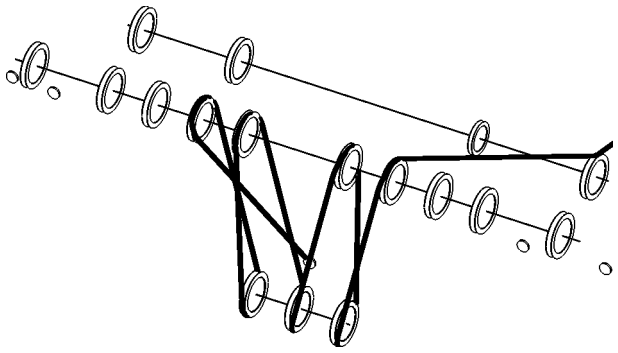 7x
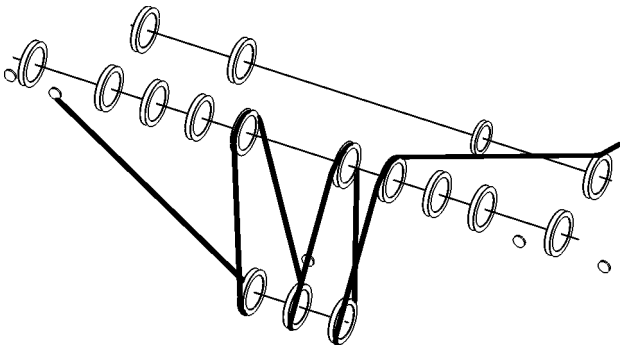 6x	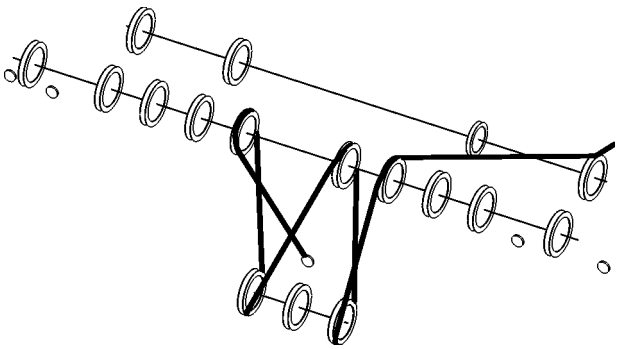 5x
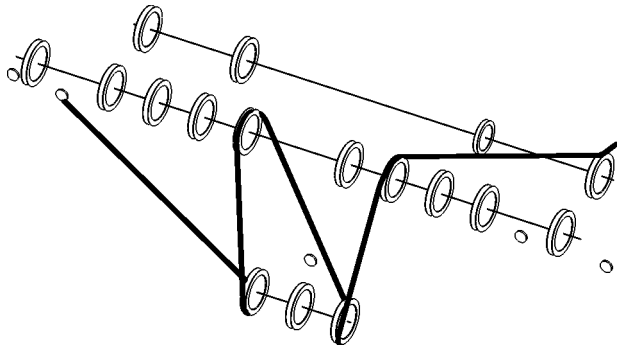 4x	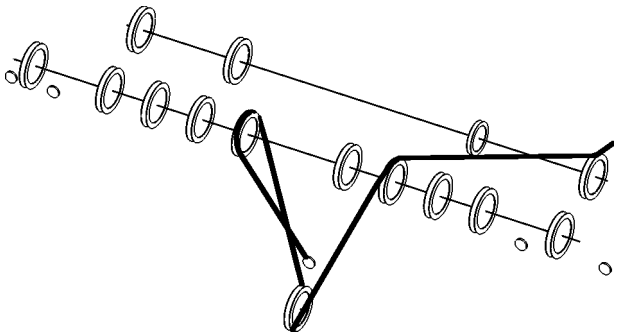 3x
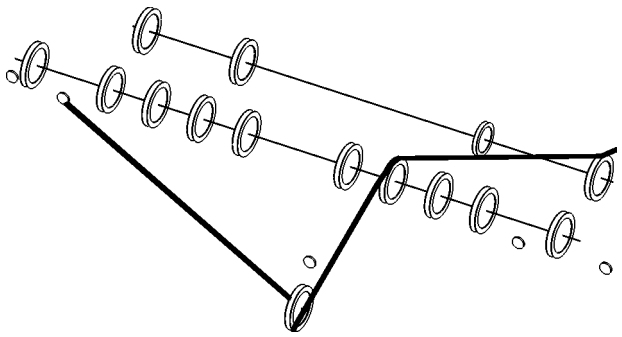 2x	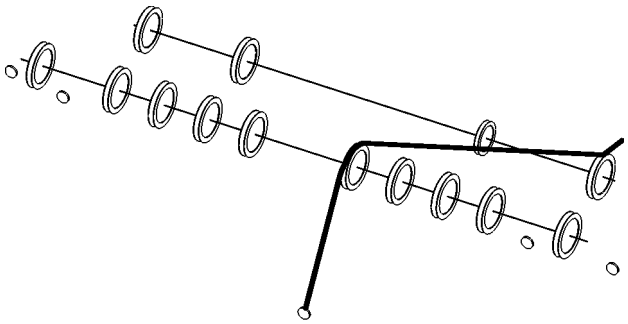 1x

Tab. 518: Reeving diagrams for one rope across main boom head 2821 (load position2)

LWN/LR.x/V03.01//Auslieferung/2015-06-03/en

copyright by LIEBHERR

7.17 Fixed jib 1008

System-relevant information for fixed jib 1008:
- Configuration of jib
- Configuration of main boom
- Overview of pendant straps on fixed jib 1008
- Reeving diagrams for one rope across jib head 1008 (load position1)
- Reeving diagrams for two ropes across jib head 1008 (load position1)
- Reeving diagrams for one rope across main boom head 2821 (load position2)

7.17.1 Configuration of jib

DANGER
Excess length of jib!
Structural breakdown.

▶ Check jib length in load chart for validity.

Jib length	Configuration of jib (symbolic)
11 m 36 ft	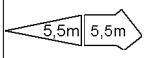
14 m 46 ft	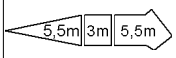
17 m 56 ft	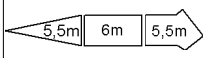
20 m 66 ft	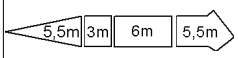
23 m 75 ft	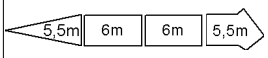
26 m 85 ft	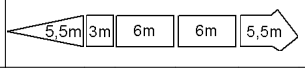

Tab. 519: Configuration of fixed jib 1008

7.17.2 Configuration of main boom

DANGER
Excess length of main boom!
Structural breakdown.

▶ Check main boom length in load chart for validity.

Note

▶ See system-relevant data of main boom for information on main boom configuration (For more information see: 7.5.1 Configuration of main boom, page 1230) .

LWN/LR.x/V03.01//Auslieferung/2015-06-03/en

copyright by
LIEBHERR

7.17.3 Overview of pendant straps on fixed jib 1008

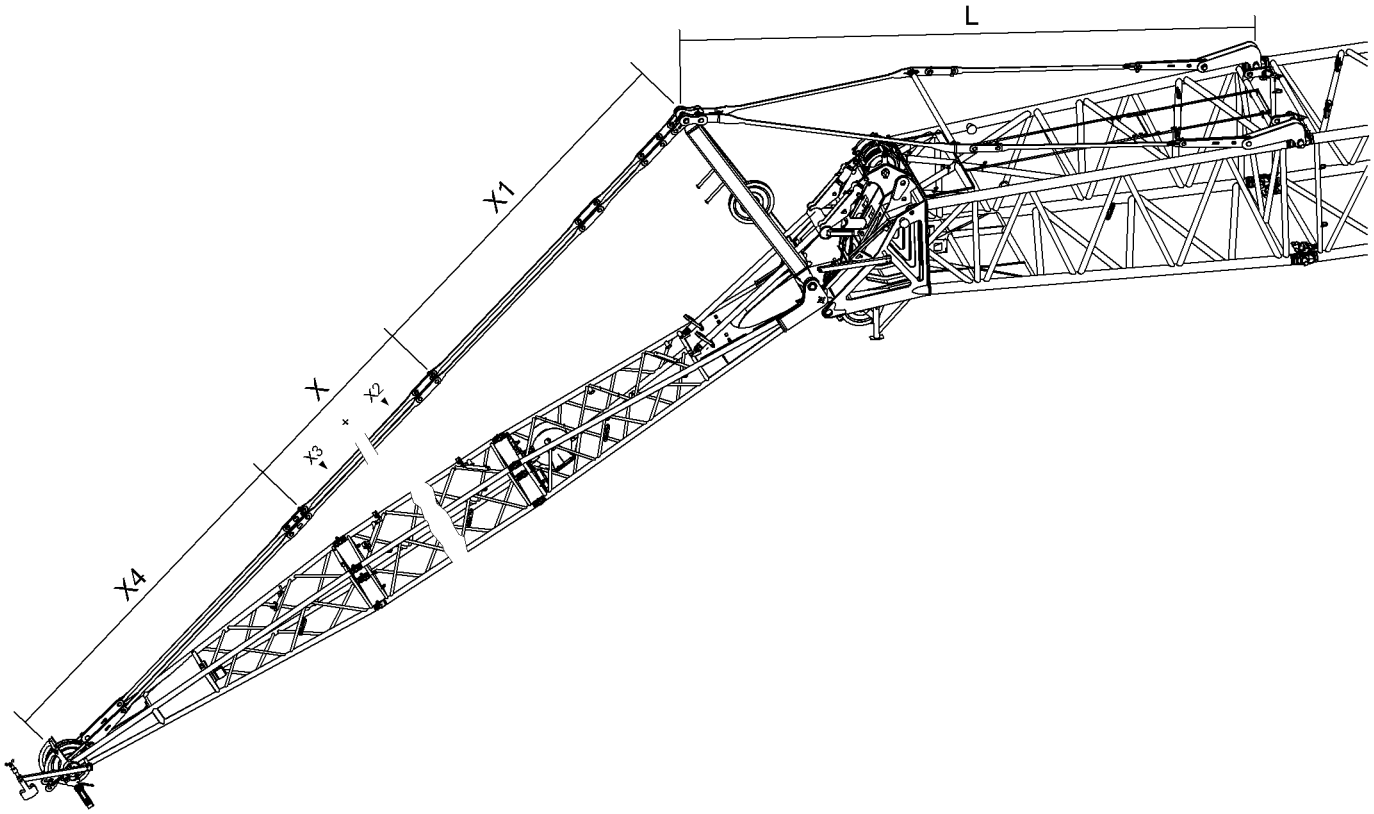

Fig. 4590: Overview of pendant straps on fixed jib 1008

Jib backstay straps A-frame2 to main boom head 2821

Name		Value
L	**A-frame2 equalizer (jib backstay strap)** (For more information see: Equalizer A-frame2 (jib backstay strap), page 273)	at 30° 9760 mm 32‘ ft-in
		at 15° 8943 mm 29‘ 4“ ft-in

Tab. 520: Jib backstay straps A-frame2 to main boom head 2821

Pendant straps A-frame2 to jib head 1008

Name		Value
X1	**A-frame2 equalizer (jib pendant strap)** (For more information see: Equalizer on A-frame2 (jib pendant strap), page 275)	5785 mm 19‘ ft-in

LWN/LR.x/V03.01//Auslieferung/2015-06-03/en

copyright by
LIEBHERR

Name			Value
X	**Jib pendant straps** consisting of:		Total **X2** + Total **X3**
	X2	**Jib pendant strap 3 m (10 ft)** (For more information see: Jib pendant strap 3 m (10 ft), page 276)	
	X3	**Jib pendant strap 6 m (20 ft)** (For more information see: Jib pendant strap 6 m (20 ft), page 277)	
X4	**Jib pendant strap on jib head 1008** (For more information see: Jib pendant strap on jib head 1008.20, page 278)		5515 mm 18‘ 1“ ft-in

Tab. 521: Pendant straps A-frame2 to jib head 1008

Configuration of jib pendant straps (X):

Required number of jib pendant straps 3 m (10 ft) (**X2**) corresponds to number of jib sections 3 m (10 ft).

Required number of jib pendant straps 6 m (20 ft) (**X3**) corresponds to number of jib sections 6 m (20 ft).

Note

▶ For the admissible number of jib sections 3 m (10 ft), 6 m (20 ft), refer to the following table: (For more information see: 7.17.1 Configuration of jib, page 1509)

LWN/LR.x/V03.01//Auslieferung/2015-06-03/en

copyright by
LIEBHERR

7.17.4 Reeving diagrams for one rope across jib head 1008 (load position1)

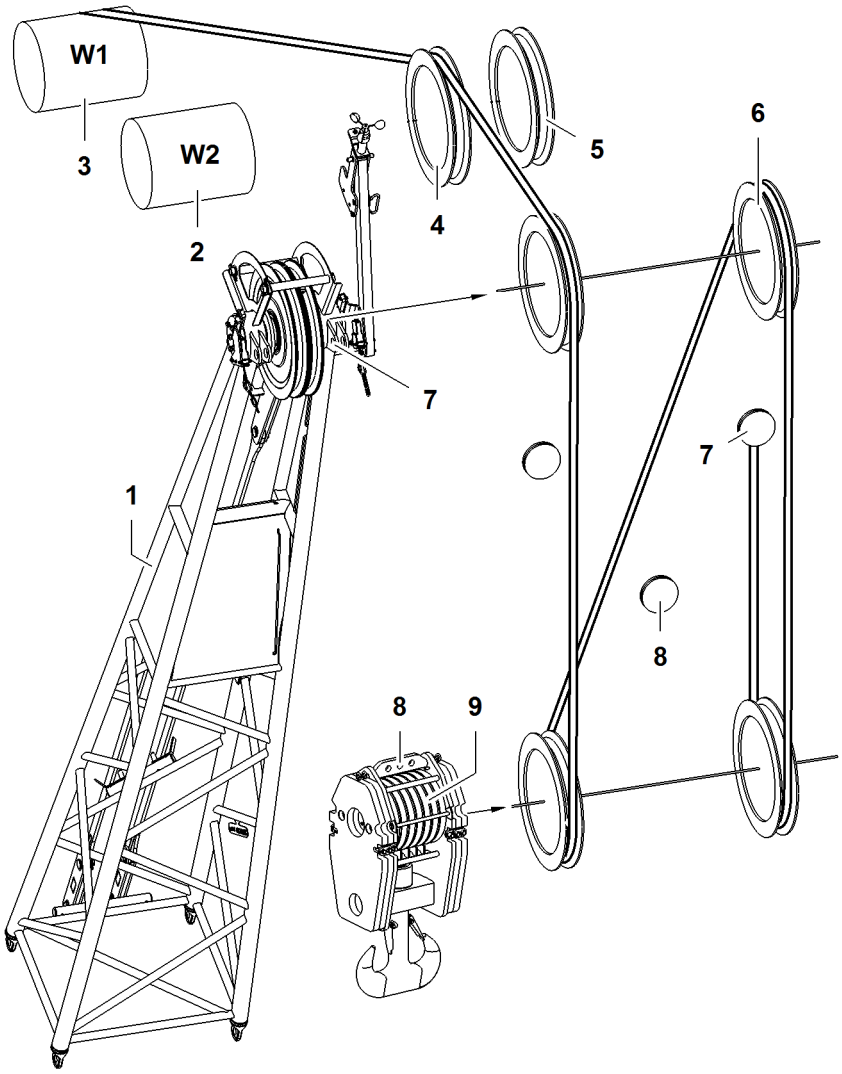

Fig. 4591: Reeving diagrams for one rope across jib head 1008 (load position1)

1	Jib head	**6**	Pulley (2x) of jib head
2	Winch2	**7**	Rope fixing point (2x) of jib head
3	Winch1	**8**	Rope fixing points of pulley block
4	Pulley of A-frame2	**9**	Pulley set of pulley block
5	Retrofit kit* for operation with two ropes across jib head		

DANGER
Incorrect number of reevings!
Structural breakdown, toppling of machine.

▶ Choose the correct number of reevings as per the load chart.

LWN/LR.x/V03.01//Auslieferung/2015-06-03/en

copyright by
LIEBHERR

Reeving diagrams for one rope across jib head 1008 (load position1)	
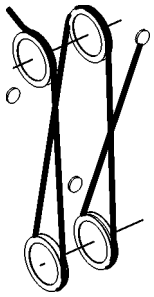 4x	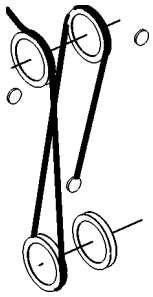 3x
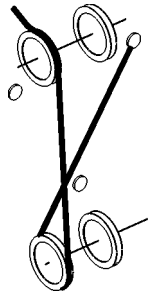 2x	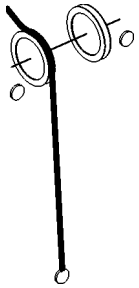 1x

Tab. 522: Reeving diagrams for one rope across jib head 1008 (load position1)

7.17.5 Reeving diagrams for two ropes across jib head 1008 (load position1)

DANGER
Incorrect number of reevings!
Structural breakdown, toppling of machine.

▶ Choose the correct number of reevings as indicated in the load chart.

LWN/LR.x/V03.01//Auslieferung/2015-06-03/en

copyright by LIEBHERR

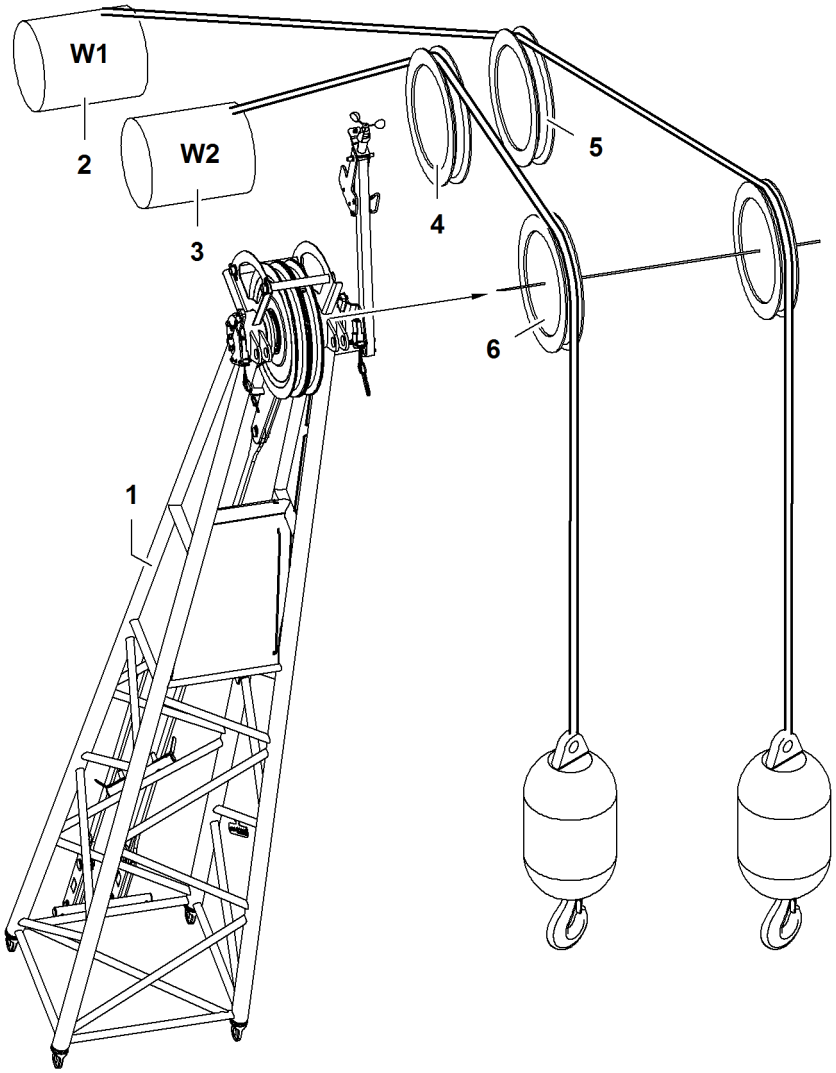

Fig. 4596: Reeving diagrams for two ropes across jib head 1008 (load position1)

1	Jib head	**4**	Pulley of A-frame2
2	Winch1	**5**	Retrofit kit* for operation with two ropes across jib head
3	Winch2	**6**	Pulley (2x) of jib head

7.17.6 Reeving diagrams for one rope across main boom head 2821 (load position2)

If the main boom with jib attached is also used to lift a load, reeve main boom head 2821 as shown below.

LWN/LR.x/V03.01//Auslieferung/2015-06-03/en

copyright by
LIEBHERR

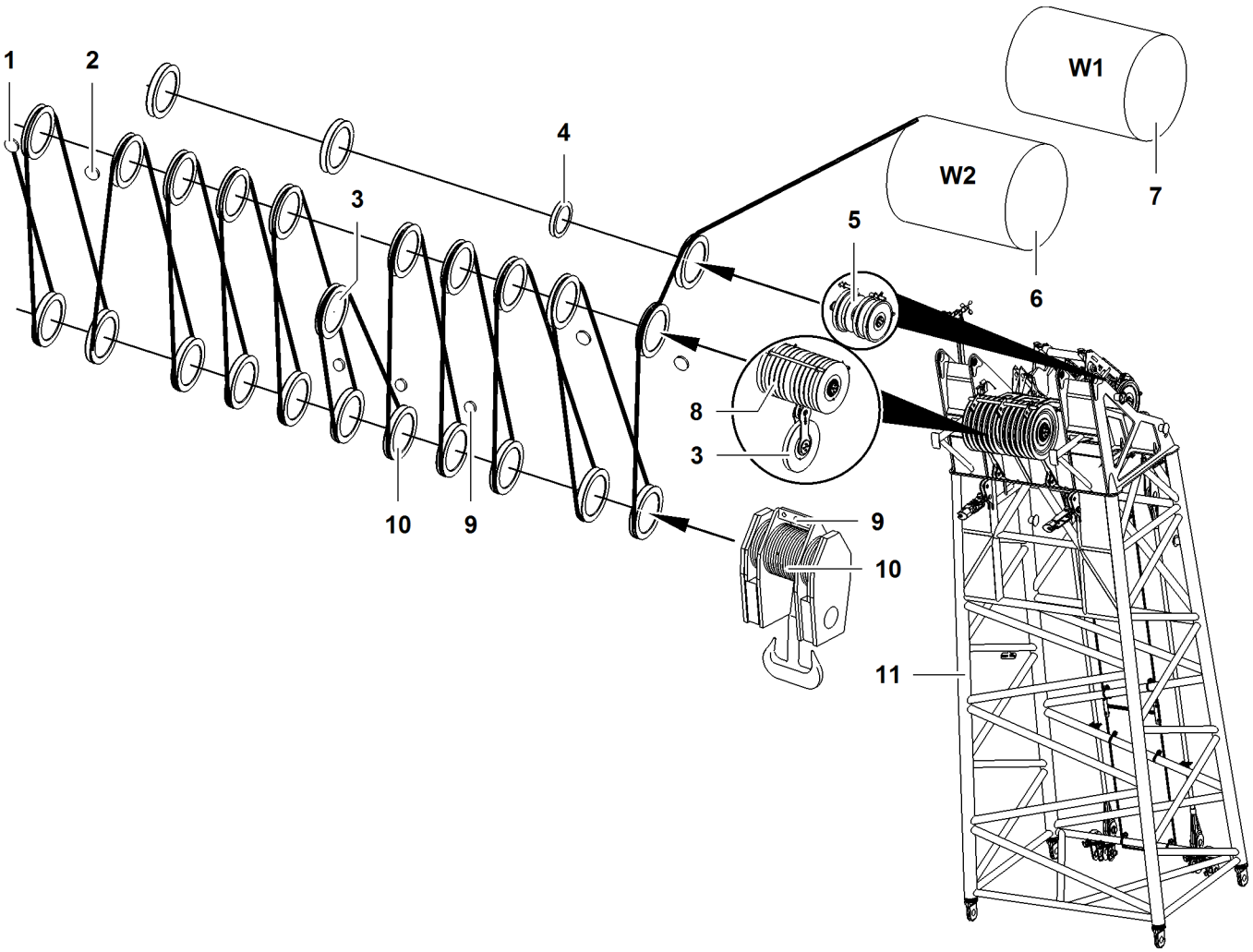

Fig. 4597: Reeving diagrams for one rope across main boom head 2821 (load position2)

1	Outer rope fixing point (2x) of main boom head	**5**	Gantry pulley (3x) of main boom head	**9**	Rope fixing points of pulley block
2	Inner rope fixing point (2x) of main boom head	**6**	Winch2	**10**	Pulley set of pulley block
3	11th pulley of main boom head	**7**	Winch1	**11**	Main boom head
4	Pulley for rope of jib luffing winch	**8**	Pulley (10x) of main boom head		

DANGER
Inadmissible number of reevings!
Structural breakdown, toppling of machine.

▶ Choose correct number of reevings as indicated in load chart.

LWN/LR.x/V03.01//Auslieferung/2015-06-03/en

copyright by
LIEBHERR

Reeving diagrams for one rope across main boom head 2821 (load position2)	
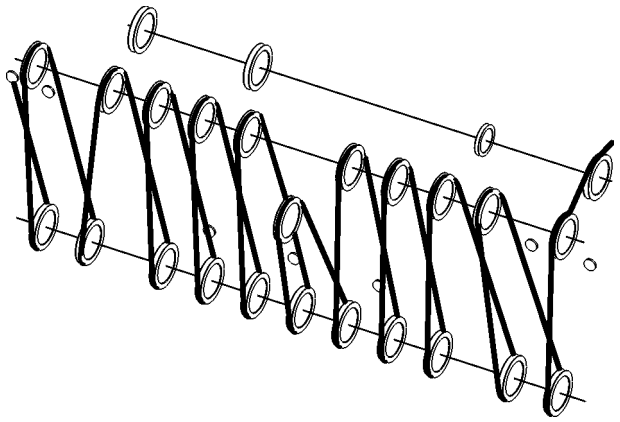 22x	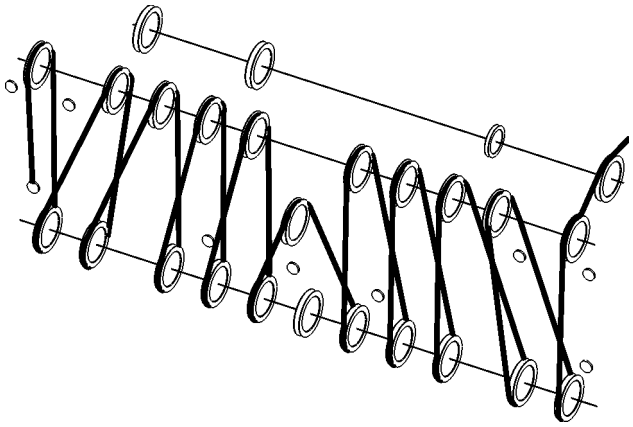 21x
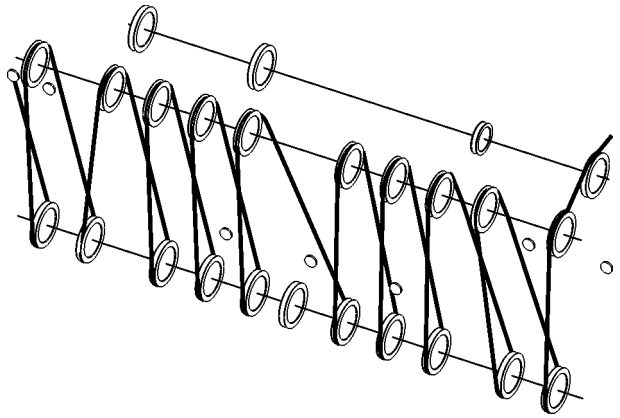 20x	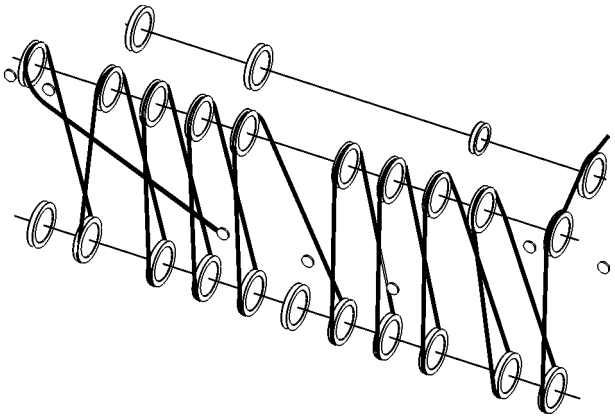 19x
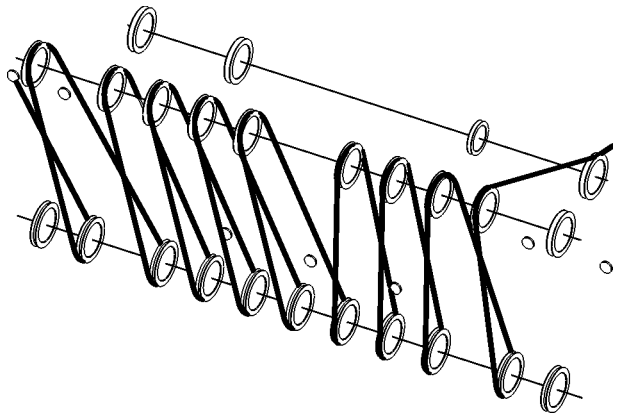 18x	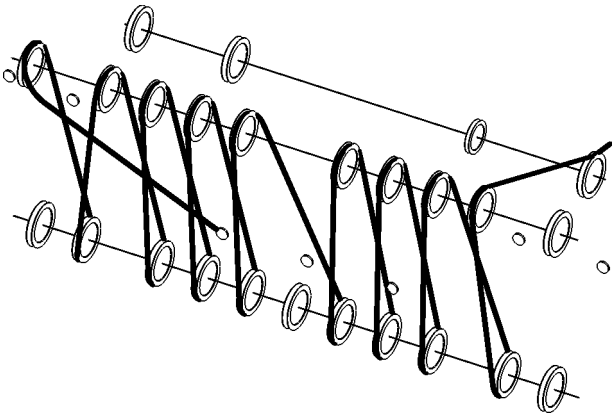 17x

LWN/LR.x/V03.01//Auslieferung/2015-06-03/en

copyright by LIEBHERR

Reeving diagrams for one rope across main boom head 2821 (load position2)	
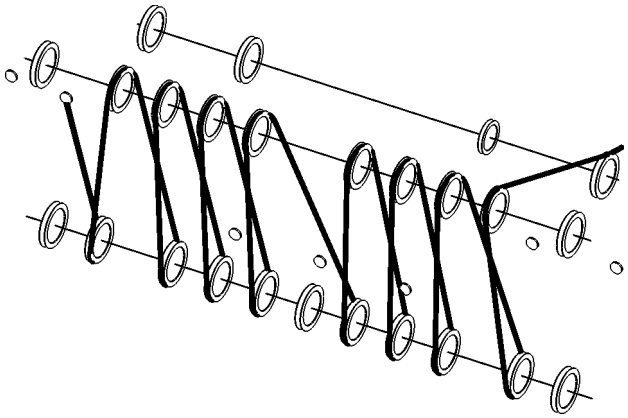 16x	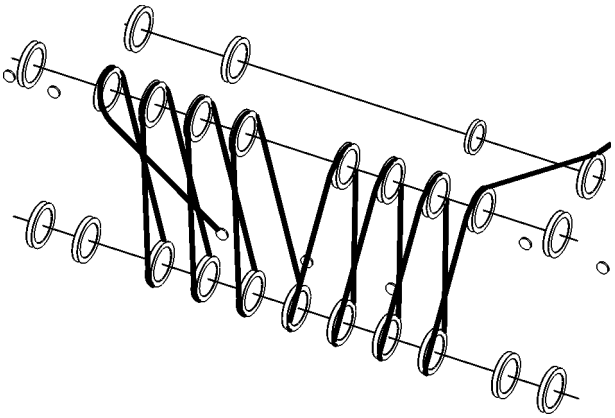 15x
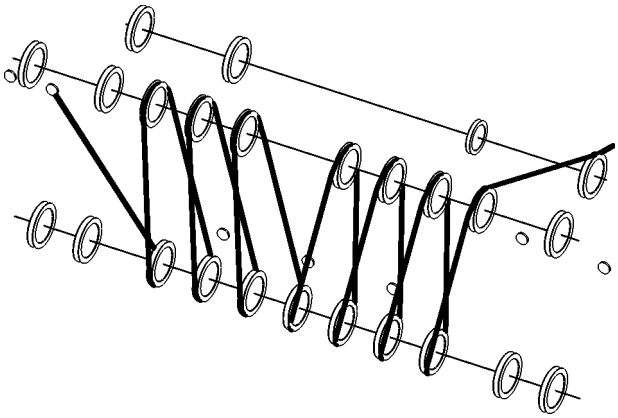 14x	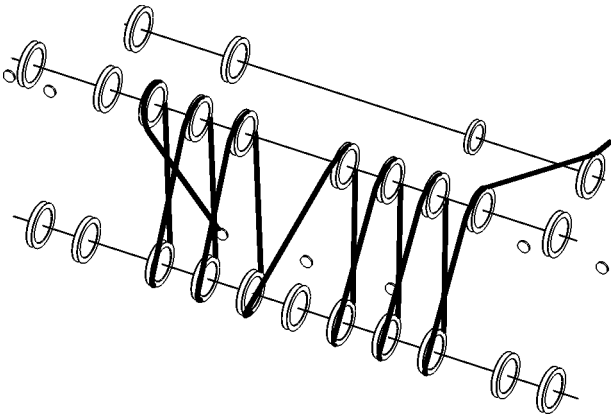 13x
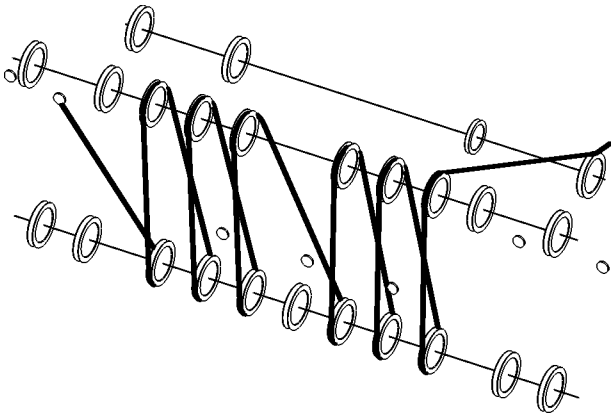 12x	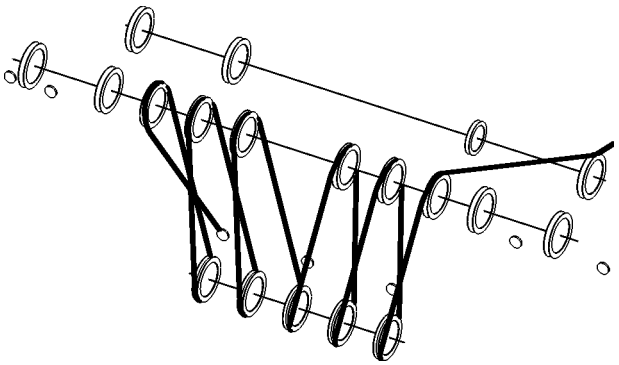 11x
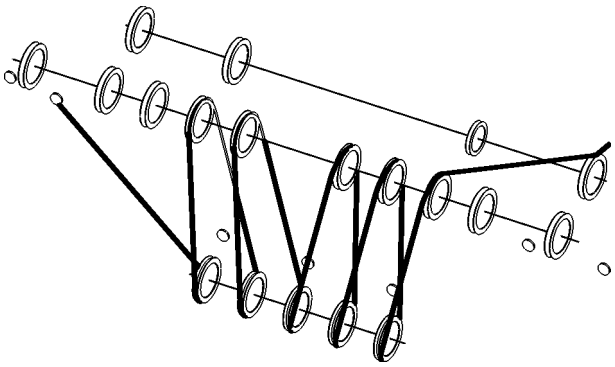 10x	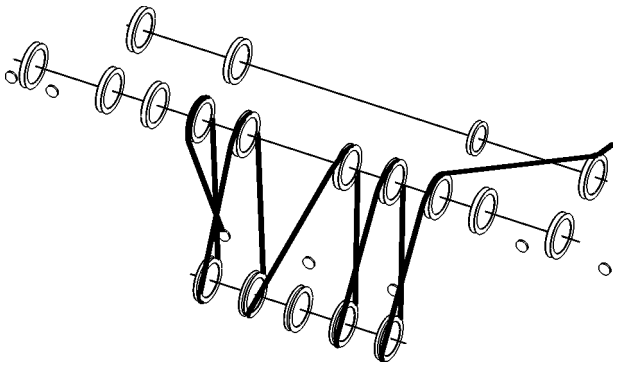 9x

LWN/LR.x/V03.01//Auslieferung/2015-06-03/en

copyright by
LIEBHERR

Reeving diagrams for one rope across main boom head 2821 (load position2)	
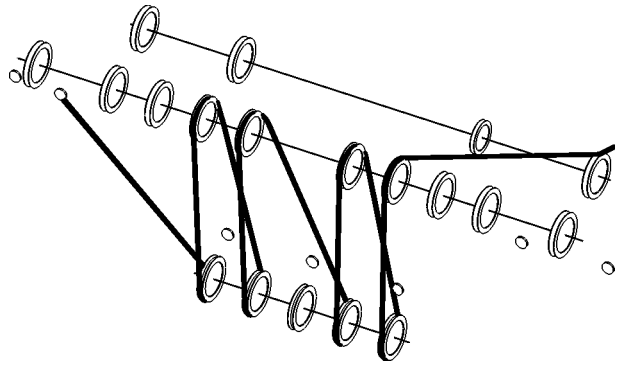 8x	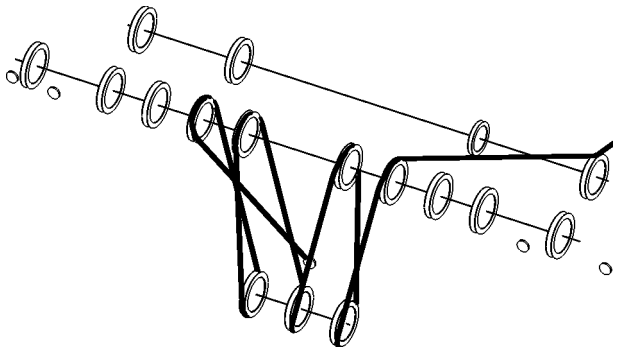 7x
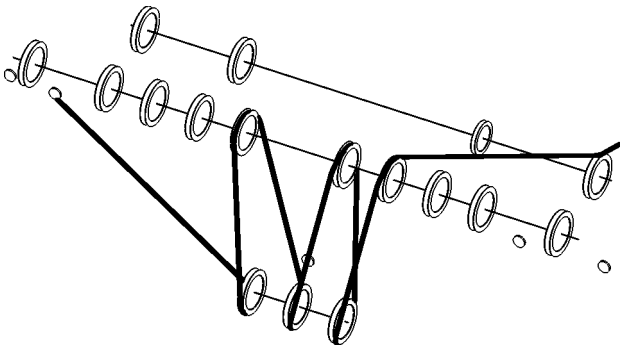 6x	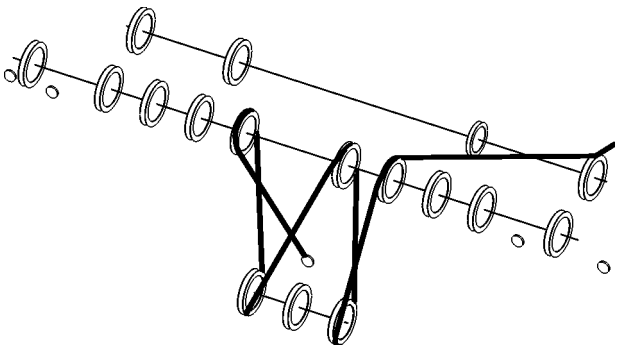 5x
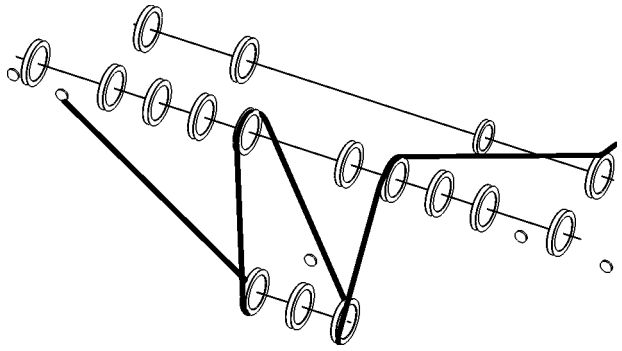 4x	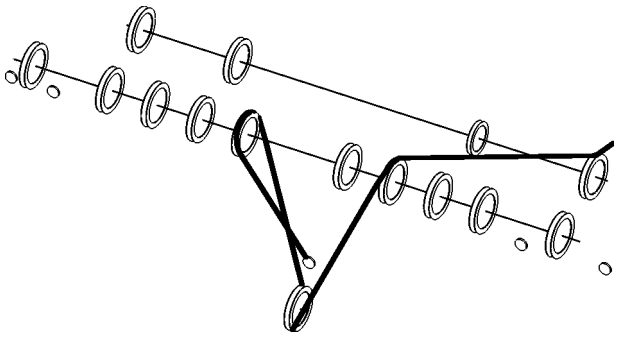 3x
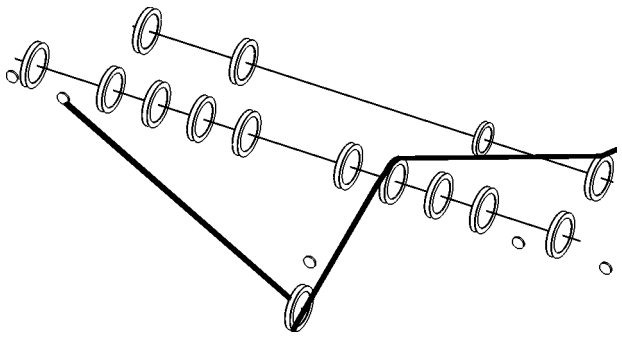 2x	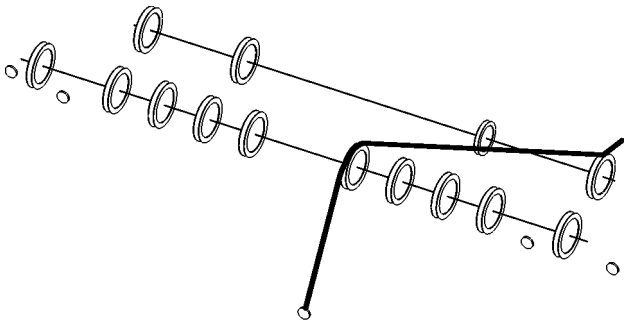 1x

Tab. 523: Reeving diagrams for one rope across main boom head 2821 (load position2)

LWN/LR.x/V03.01//Auslieferung/2015-06-03/en

copyright by LIEBHERR

7.18 Fixed jib 0906

System-relevant information for fixed jib 0906:
- Configuration of jib
- Configuration of main boom
- Overview of pendant straps on fixed jib 0906
- Reeving diagrams for one rope across jib head 0906 (load position1)
- Reeving diagrams for two ropes across jib head 0906 (load position1)
- Reeving diagrams for one rope across main boom head 2821 (load position2)

7.18.1 Configuration of jib

The fixed jib 0906 has a fixed length of 7 m (23 ft).

Jib length	Configuration of jib (symbolic)
7 m 23 ft	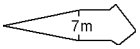

Tab. 524: Configuration of fixed jib 0906

7.18.2 Configuration of main boom

DANGER
Excess length of main boom!
Structural breakdown.

▶ Check main boom length in load chart for validity.

Note

▶ See system-relevant data of main boom for information on main boom configuration (For more information see: 7.5.1 Configuration of main boom, page 1230) .

LWN/LR.x/V03.01//Auslieferung/2015-06-03/en

copyright by
LIEBHERR

7.18.3 Overview of pendant straps on fixed jib 0906

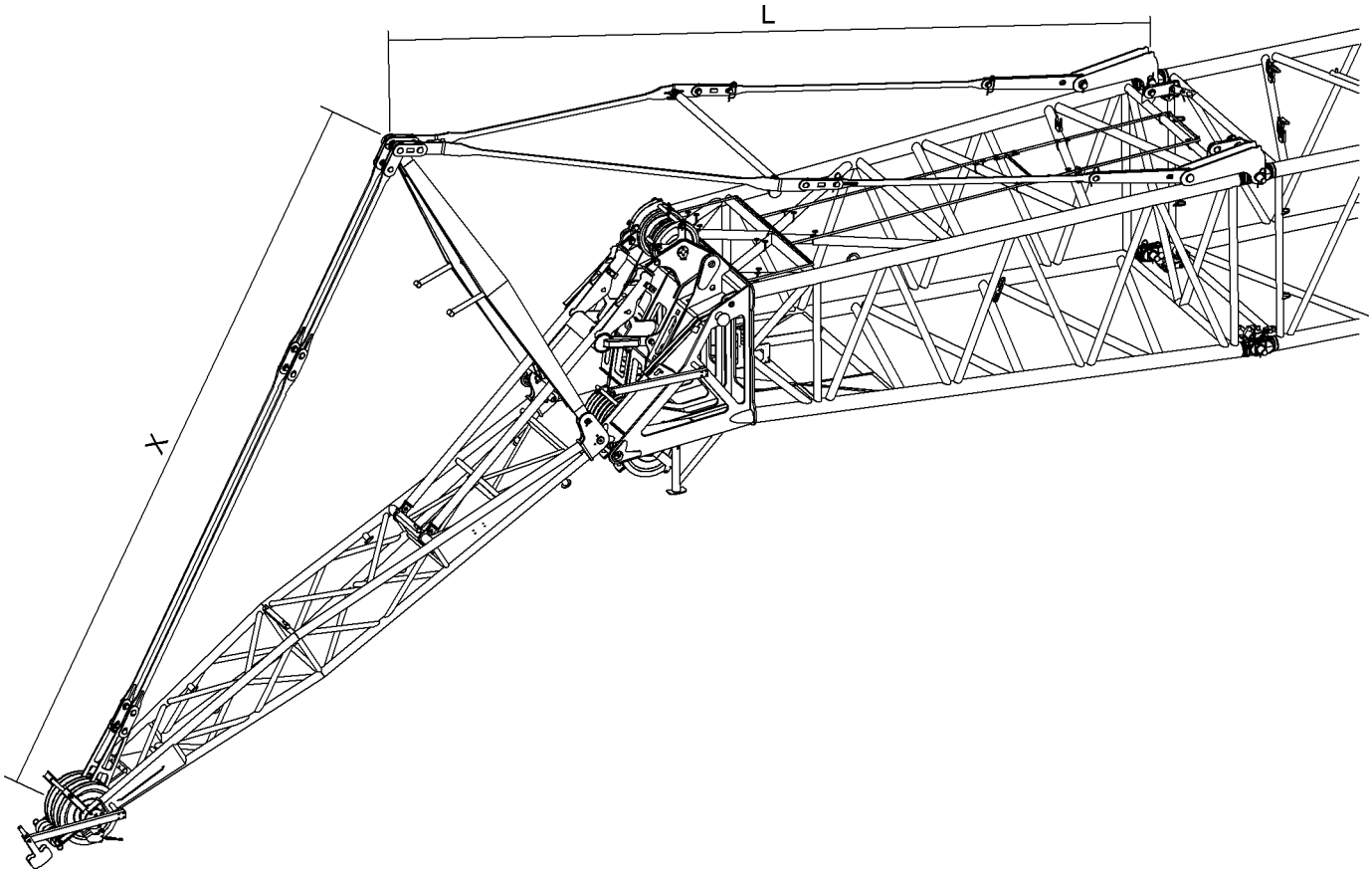

Fig. 4621: Overview of pendant straps on fixed jib 0906

Jib backstay straps A-frame2 to main boom head 2821

Name		Value
L	**A-frame2 equalizer (jib backstay strap)** (For more information see: Equalizer A-frame2 (jib backstay strap), page 281)	at 30° 10000 mm 32‘ 10“ ft-in

Tab. 525: Jib backstay straps A-frame2 to main boom head 2821

Pendant straps A-frame2 to jib head 0906

Name		Value
X	**Jib pendant strap (A-frame2 to jib head 0906)** (For more information see: Jib pendant strap (A-frame2 to jib head 0906.21), page 283)	8235 mm 27‘ ft-in

Tab. 526: Pendant straps A-frame2 to jib head 0906

LWN/LR.x/V03.01//Auslieferung/2015-06-03/en

copyright by
LIEBHERR

7.18.4 Reeving diagrams for one rope across jib head 0906 (load position1)

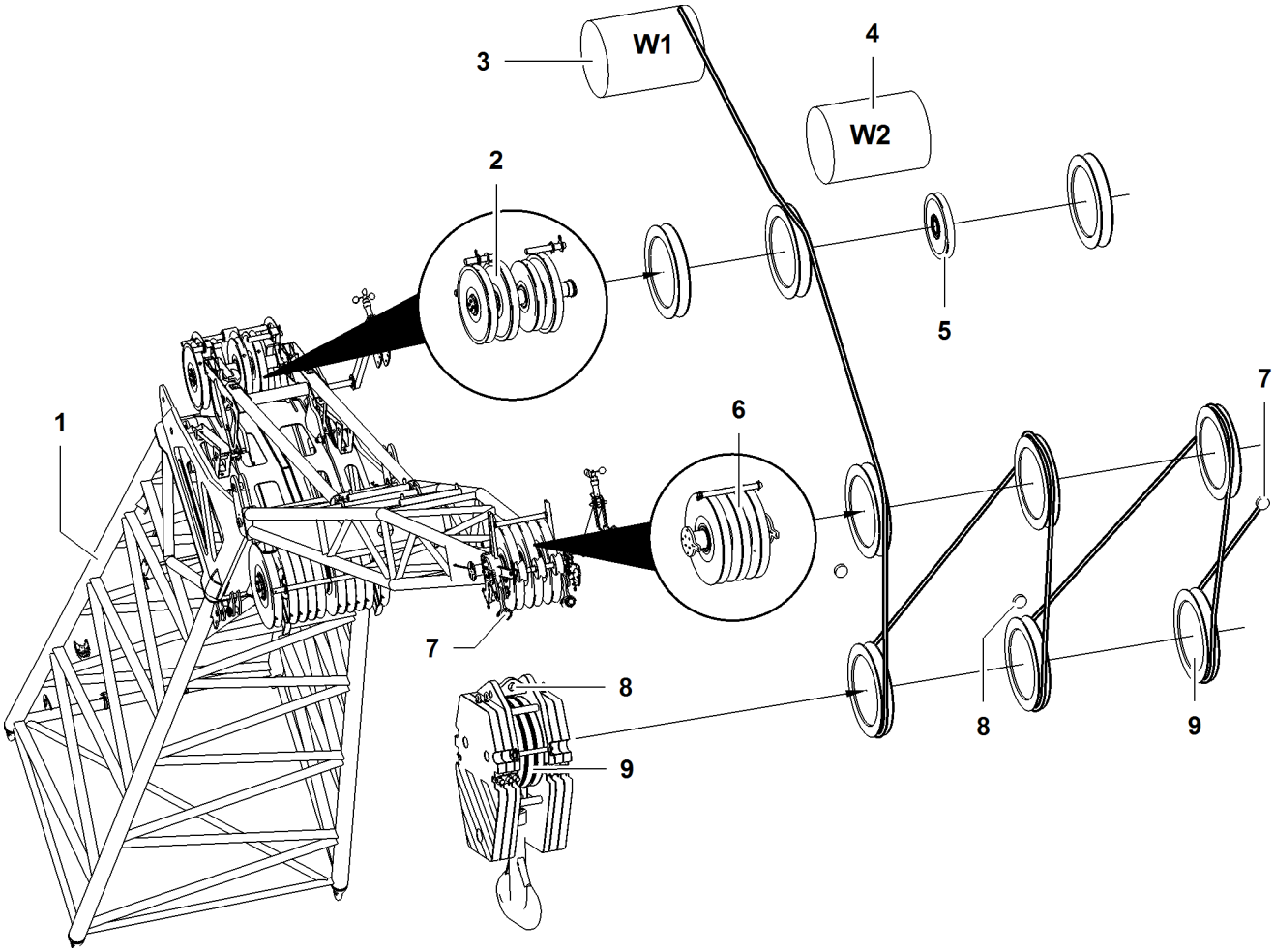

Fig. 4622: Reeving diagrams for one rope across jib head 0906 (load position1)

1	Main boom head	**4**	Winch2	**7**	Rope fixing point (2x) of jib head
2	Gantry pulley (3x) of main boom head	**5**	Pulley for rope of jib luffing winch	**8**	Rope fixing points of pulley block
3	Winch1	**6**	Pulley (3x) of jib head	**9**	Pulley set of pulley block

DANGER
Inadmissible number of reevings!
Structural breakdown, toppling of machine.

▶ Choose correct number of reevings as indicated in load chart.

LWN/LR.x/V03.01//Auslieferung/2015-06-03/en

copyright by LIEBHERR

Reeving diagrams for one rope across jib head 0906 (load position1)	
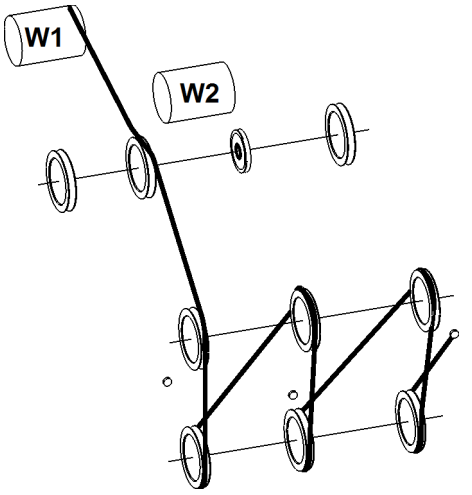 6x	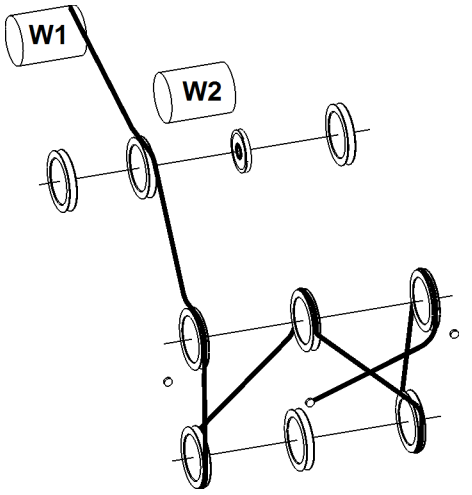 5x
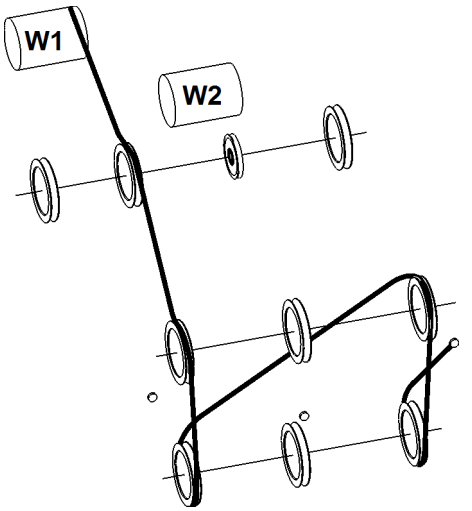 4x	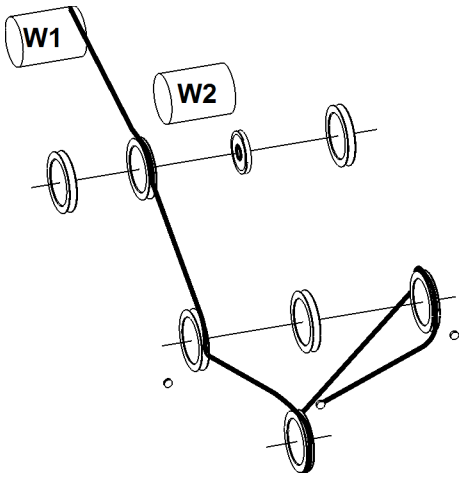 3x
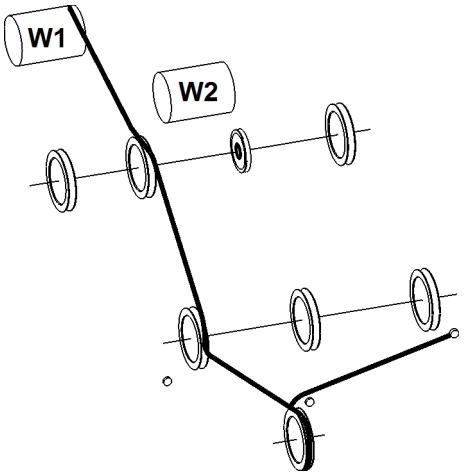 2x	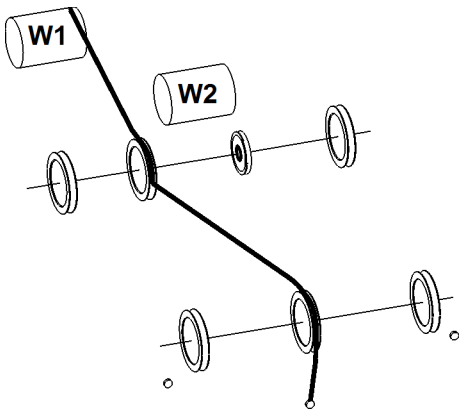 1x

Tab. 527: Reeving diagrams for one rope across jib head 0906 (load position1)

LWN/LR.x/V03.01//Auslieferung/2015-06-03/en

copyright by
LIEBHERR

7.18.5 Reeving diagrams for two ropes across jib head 0906 (load position1)

DANGER
Incorrect number of reevings!
Structural breakdown, toppling of machine.

▶ Choose the correct number of reevings as indicated in the load chart.

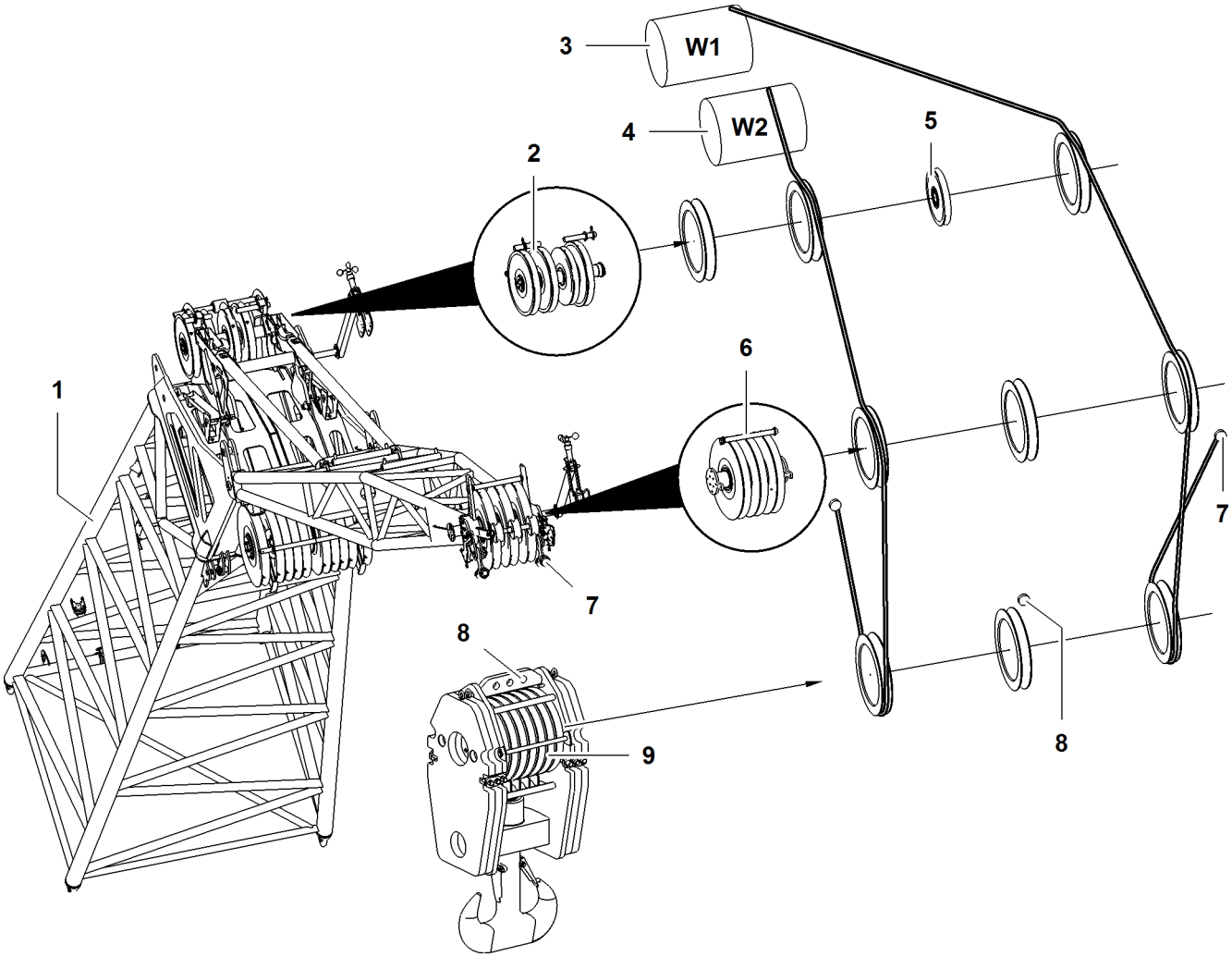

Fig. 4629: Reeving diagrams for two ropes across jib head 0906 (load position1)

1	Main boom head	**4**	Winch2	**7**	Rope fixing point (2x) of jib head
2	Gantry pulley (3x) of main boom head	**5**	Pulley for rope of jib luffing winch	**8**	Rope fixing points of pulley block
3	Winch1	**6**	Pulley (3x) of jib head	**9**	Pulley set of pulley block

7.18.6 Reeving diagrams for one rope across main boom head 2821 (load position2)

If the main boom with jib attached is also used to lift a load, reeve main boom head 2821 as shown below.

LWN/LR.x/V03.01//Auslieferung/2015-06-03/en

copyright by
LIEBHERR

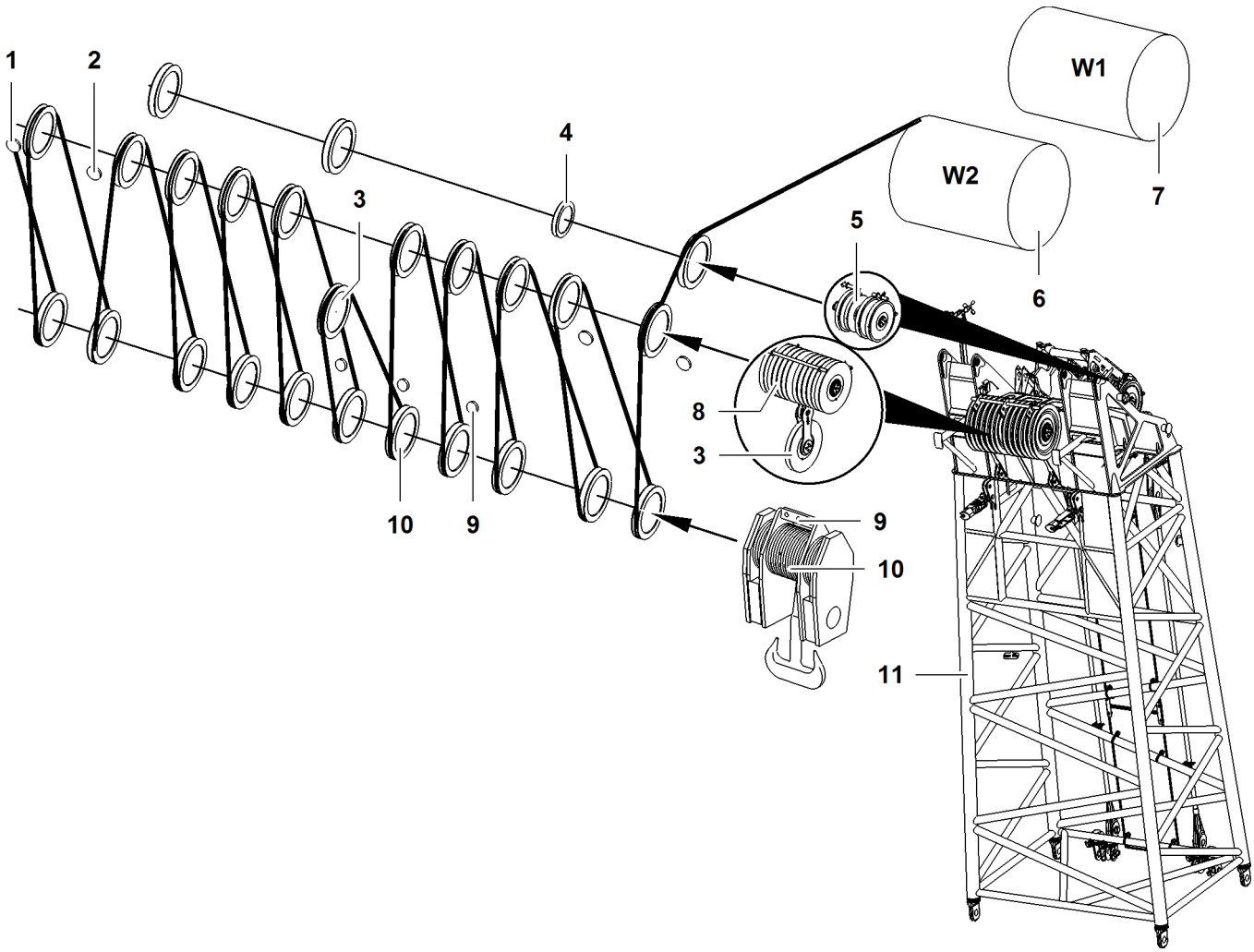

Fig. 4630: Reeving diagrams for one rope across main boom head 2821 (load position2)

1	Outer rope fixing point (2x) of main boom head	**5**	Gantry pulley (3x) of main boom head	**9**	Rope fixing points of pulley block
2	Inner rope fixing point (2x) of main boom head	**6**	Winch2	**10**	Pulley set of pulley block
3	11th pulley of main boom head	**7**	Winch1	**11**	Main boom head
4	Pulley for rope of jib luffing winch	**8**	Pulley (10x) of main boom head		

DANGER
Inadmissible number of reevings!
Structural breakdown, toppling of machine.

▶ Choose correct number of reevings as indicated in load chart.

LWN/LR.x/V03.01//Auslieferung/2015-06-03/en

Reeving diagrams for one rope across main boom head 2821 (load position2)	
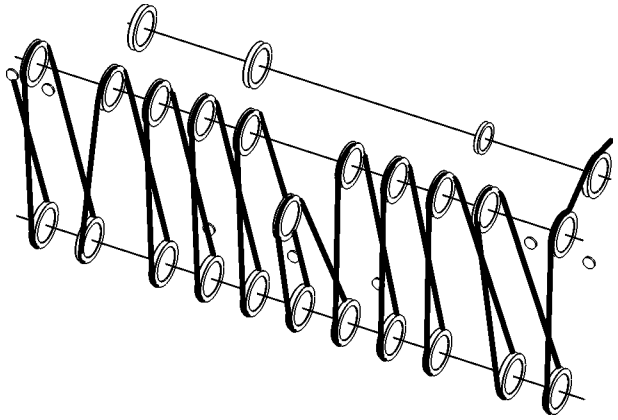 22x	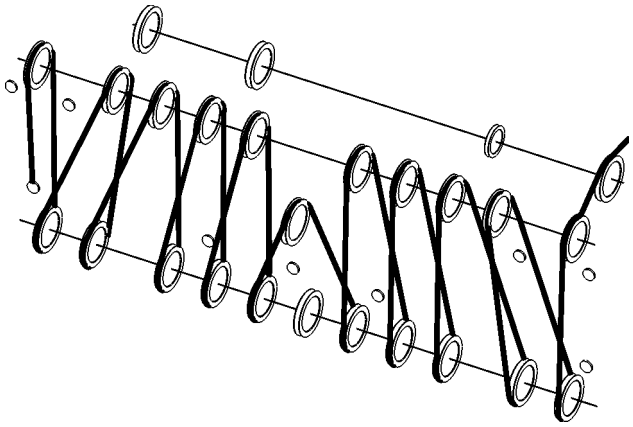 21x
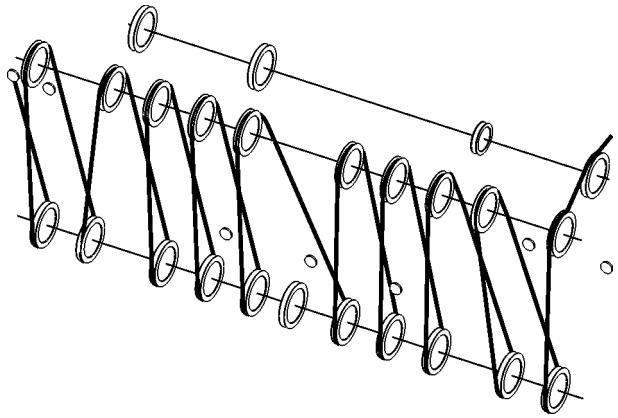 20x	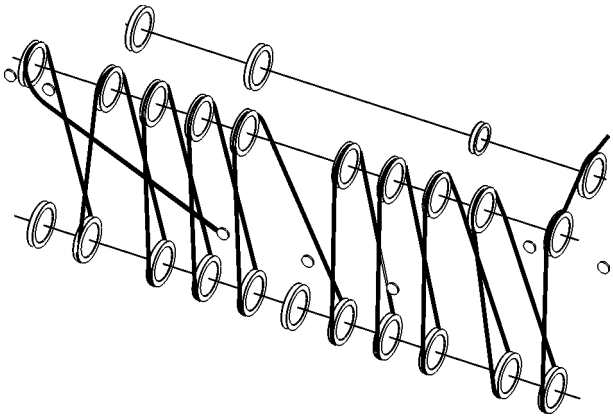 19x
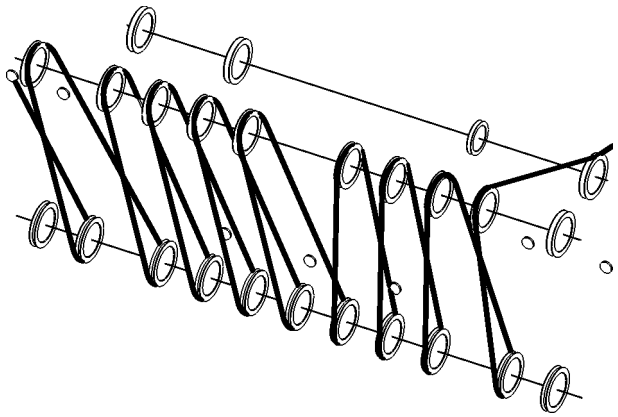 18x	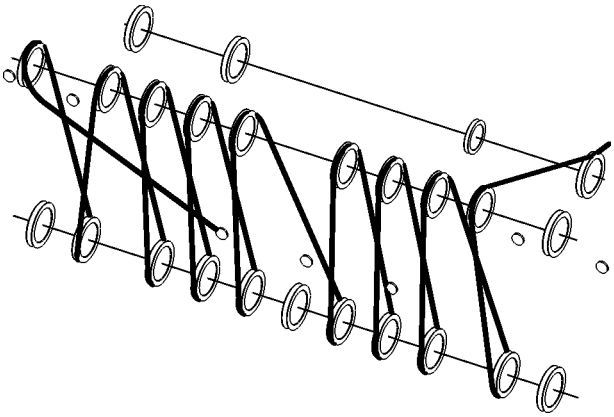 17x

LWN/LR.x/V03.01//Auslieferung/2015-06-03/en

copyright by
LIEBHERR

Reeving diagrams for one rope across main boom head 2821 (load position2)	
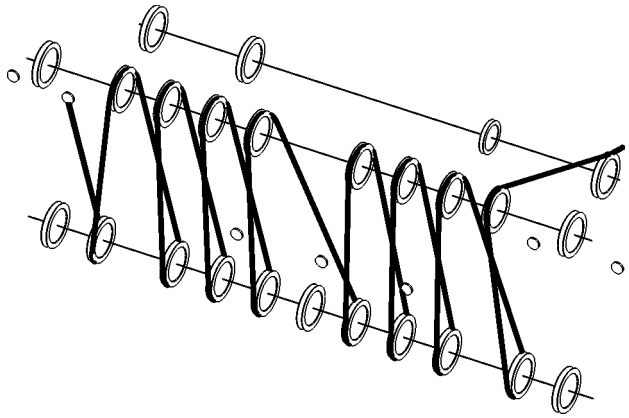 16x	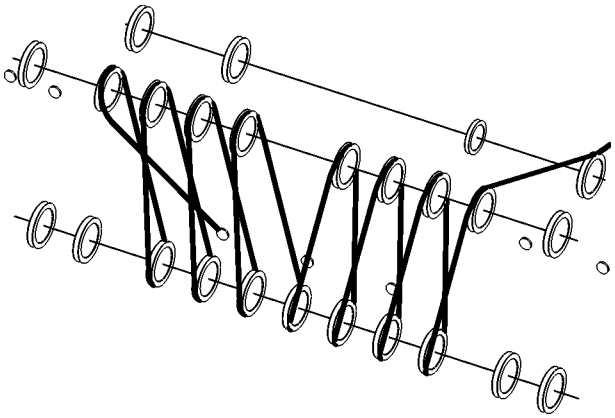 15x
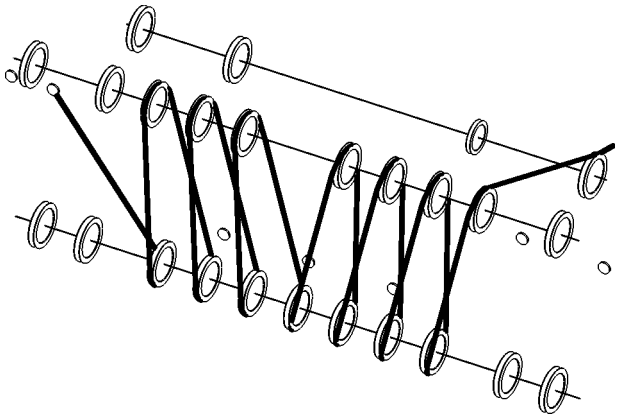 14x	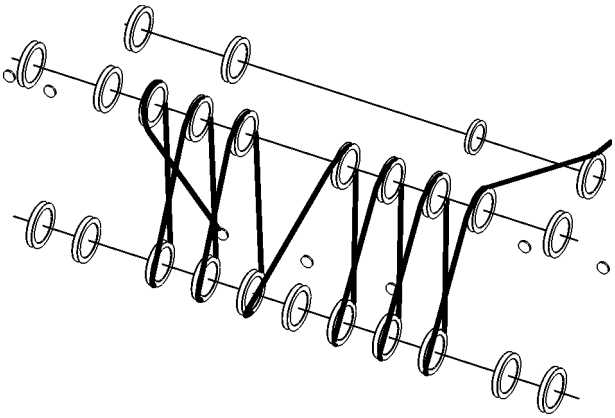 13x
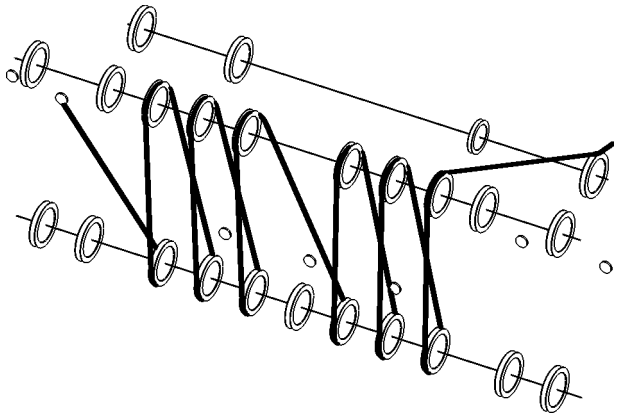 12x	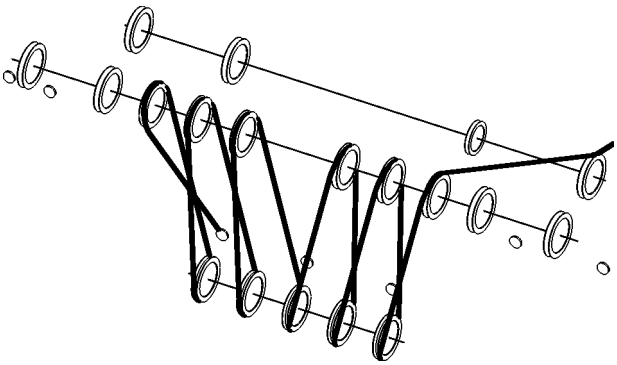 11x
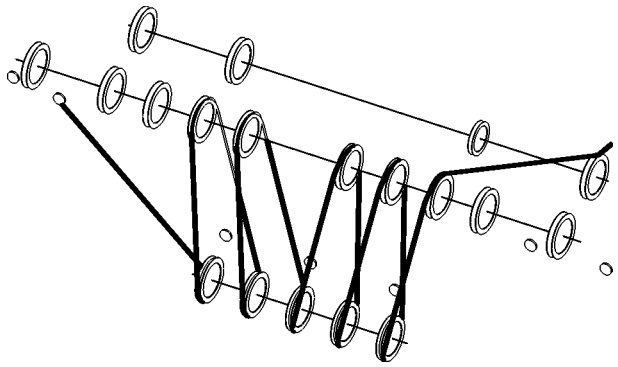 10x	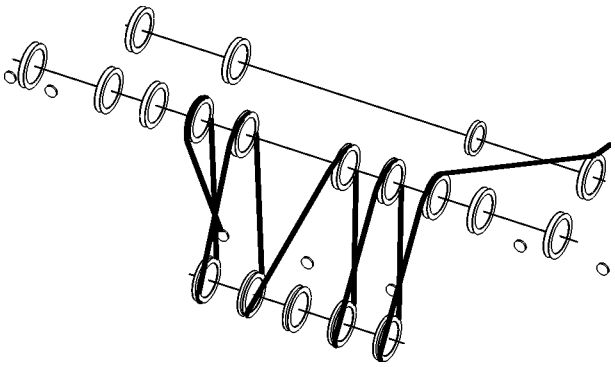 9x

LWN/LR.x/V03.01//Auslieferung/2015-06-03/en

copyright by LIEBHERR

Reeving diagrams for one rope across main boom head 2821 (load position2)	
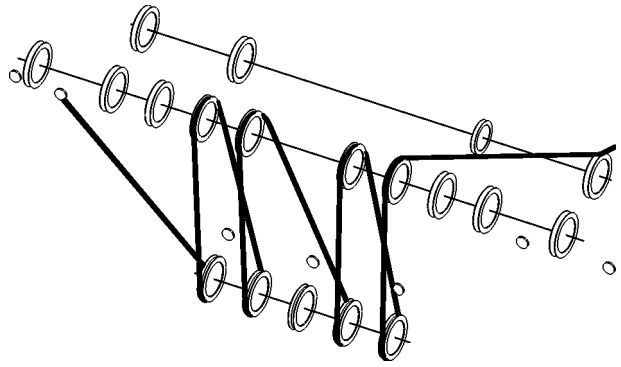 8x	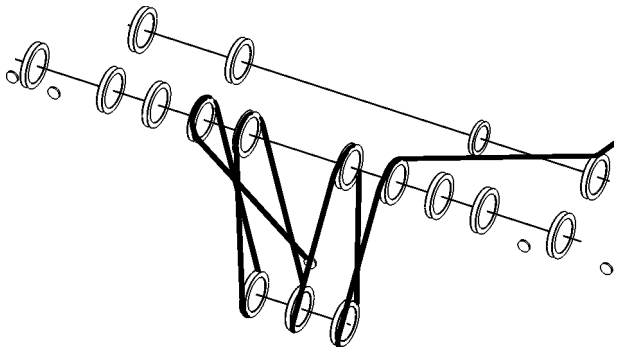 7x
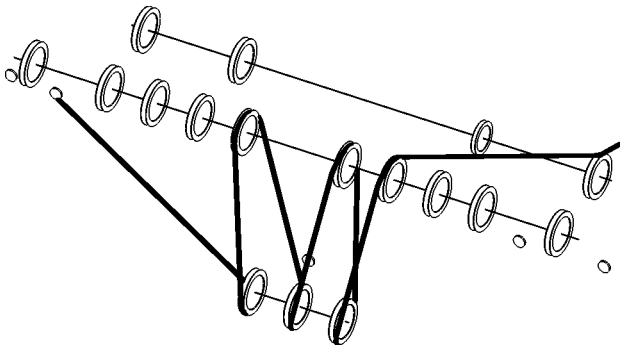 6x	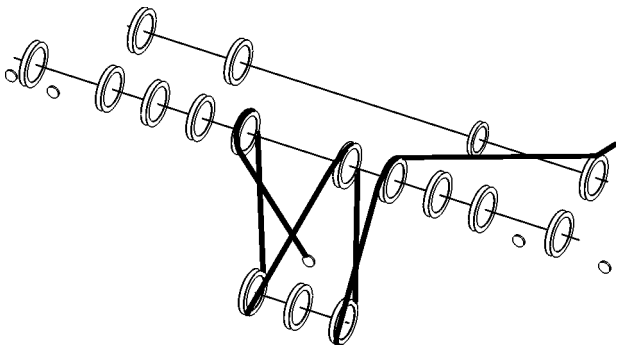 5x
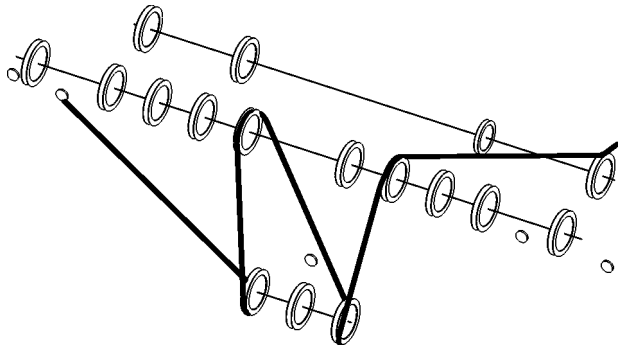 4x	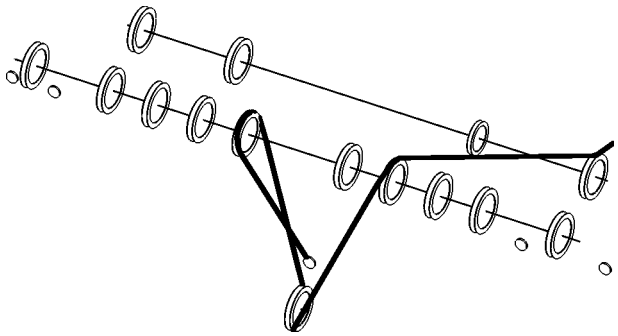 3x
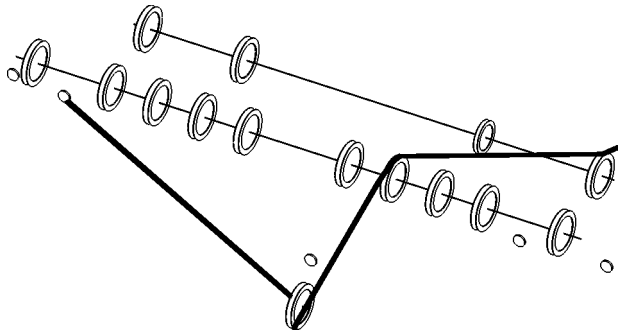 2x	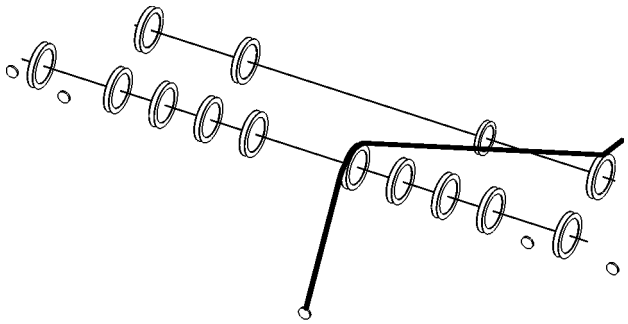 1x

Tab. 528: Reeving diagrams for one rope across main boom head 2821 (load position2)

LWN/LR.x/V03.01//Auslieferung/2015-06-03/en

copyright by
LIEBHERR

7.19 Assembling the fixed jib

Ensure that the following conditions are fulfilled:
- ❑ Assembly functions are switched on.
- ❑ The machine is ready for use as an assembly crane, or an assist crane is available.
- ❑ Work plans have been drawn up.
- ❑ The length and the order of the jib sections are known.
- ❑ Any accessories required are available.

7.19.1 Notes

The assembly of the fixed jib described below applies to all system dimensions of the fixed jib.

The illustrations have been simplified or schematically represented for reasons of uniformity and represent the principles of assembly. They do not provide a detailed representation of the components.

7.19.2 Programming the setup

DANGER
Unacceptable setup!

▶ Only program a setup on the machine that is in accordance with the load chart.

▶ Programming the setup on the machine (For more information see: 4.13 Programming the setup, page 870) .

7.19.3 Unloading and positioning the jib components

DANGER
Slewing of uppercarriage with rear counterweight attached not permitted!
Machine toppling over.

▶ Slew the uppercarriage according to the table (For more information see: Lifting and pinning the rear counterweight, page 1224) exclusively.

DANGER
Incorrect or faulty parts/components are fit!
Structural breakdown.

▶ Only use original Liebherr parts/components that are in perfect condition.

DANGER
Improperly assembled boom configuration!
Structural breakdown.

▶ Ensure that the assembled boom configuration is compatible with the programmed setup.

LWN/LR.x/V03.01//Auslieferung/2015-06-03/en

copyright by LIEBHERR

DANGER
Incorrect jib sections arrangement!
Structural breakdown.

- ▶ Assemble the boom according to the relevant system requirements.
- ▶ A jib section measuring 6 m (20 ft) cannot be replaced with two jib sections measuring 3 m (10 ft).
- ▶ A jib section measuring 12 m (40 ft) cannot be replaced with two jib sections measuring 6 m (20 ft).

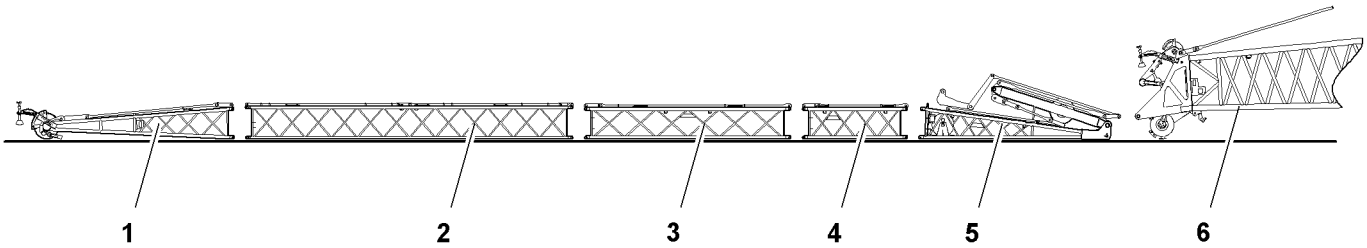

Fig. 4653: Position jib components according to relevant system instructions

1	Jib head section	**3**	Jib section 6 m (19‘ 8“ ft-in)	**5**	Jib base section
2	Jib section 12 m (39‘ 4“ ft-in)	**4**	Jib section 3 m (9‘ 10“ ft-in)	**6**	Boom head section

- ▶ Direct transport vehicles with boom sections.
- ▶ Sling boom sections by attaching lifting equipment to the lifting points.
- ▶ Unload boom sections using the basic machine or assist crane and position according to the relevant system instructions.

7.19.4 Bolting the jib head section to the jib sections

WARNING
Getting caught inside the jib sections during assembly!
Serious injury.

- ▶ Never go inside the jib sections.

LWN/LR.x/V03.01//Auslieferung/2015-06-03/en

copyright by
LIEBHERR

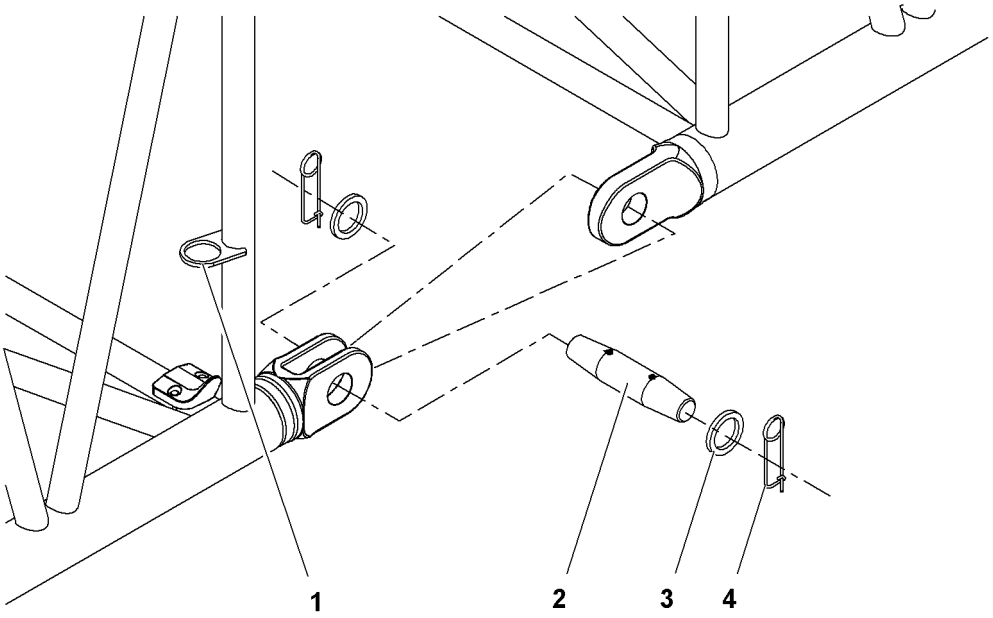

Fig. 4654: Bolting the boom

1	Transport brackets (4x) for double-taper pins	**3**	Washers (8x)
2	Double-taper pins (4x)	**4**	Safety pins (8x)

▶ Remove the double-taper pins **2** from the transport brackets **1**.

Note

▶ To make assembly and disassembly easier: grease the double-taper pin.

▶ Insert double-taper pins **2** and secure with washers **3** and safety pins **4**.

7.19.5 Attaching the jib base section

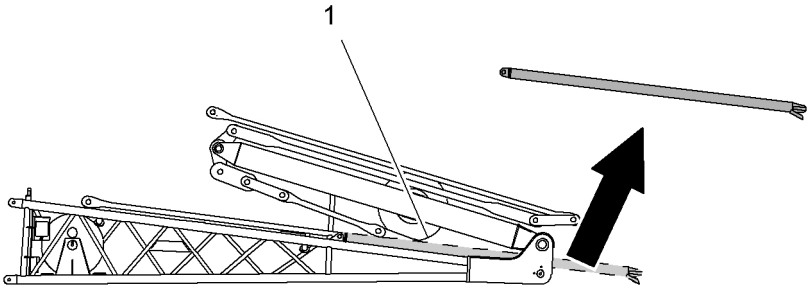

Fig. 4655: Removing rigid tilting-back supports

1 Rigid tilting-back support (2x)

Note

Liebherr recommends:

▶ To make it easier to attach the jib base section: remove the rigid tilting-back supports **1** of the fixed jib.

LWN/LR.x/V03.01//Auslieferung/2015-06-03/en

Note

If the jib base section crossbar (jib backstay strap) extends a long way over the pin connection points:

▶ Fold the jib base section crossbar (jib backstay strap) on A-frame 2 to the front in order to make attaching the jib base section easier.

▶ Rig jib base section.

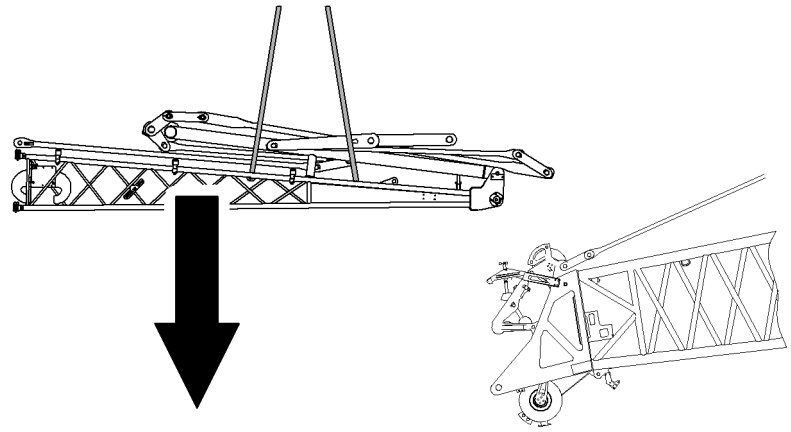

Fig. 4656: Lifting the jib base section 0806 to the boom head section

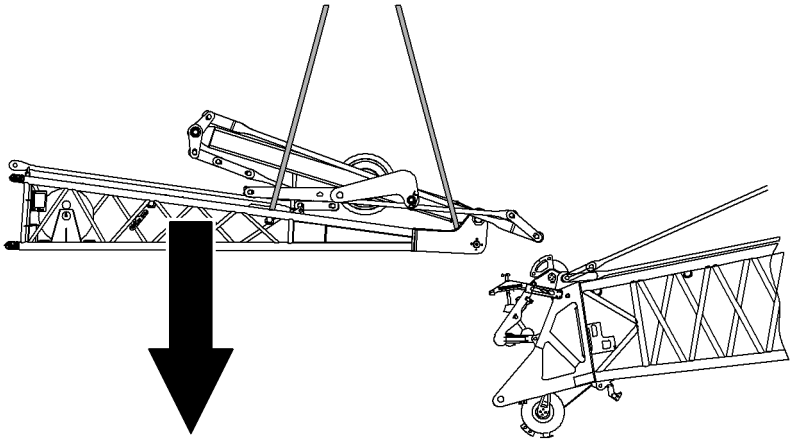

Fig. 4657: Lifting the jib base section 1008 to the boom head section

LWN/LR.x/V03.01//Auslieferung/2015-06-03/en

copyright by
LIEBHERR

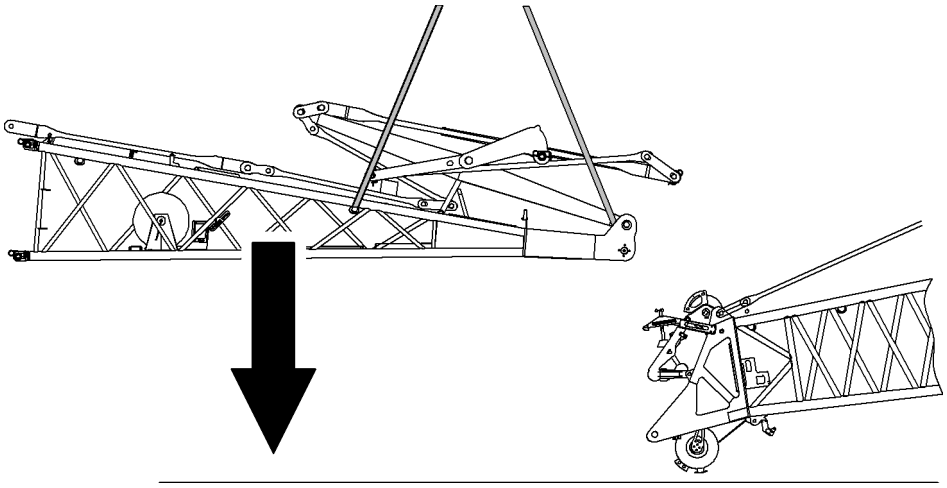

Fig. 4658: Lifting the jib base section 1713 to the boom head section

- ▶ Lift the jib base section from above onto the boom head section.
- ▶ Lower the jib base section further until the pin connection points of the jib base section and the boom head section line up.

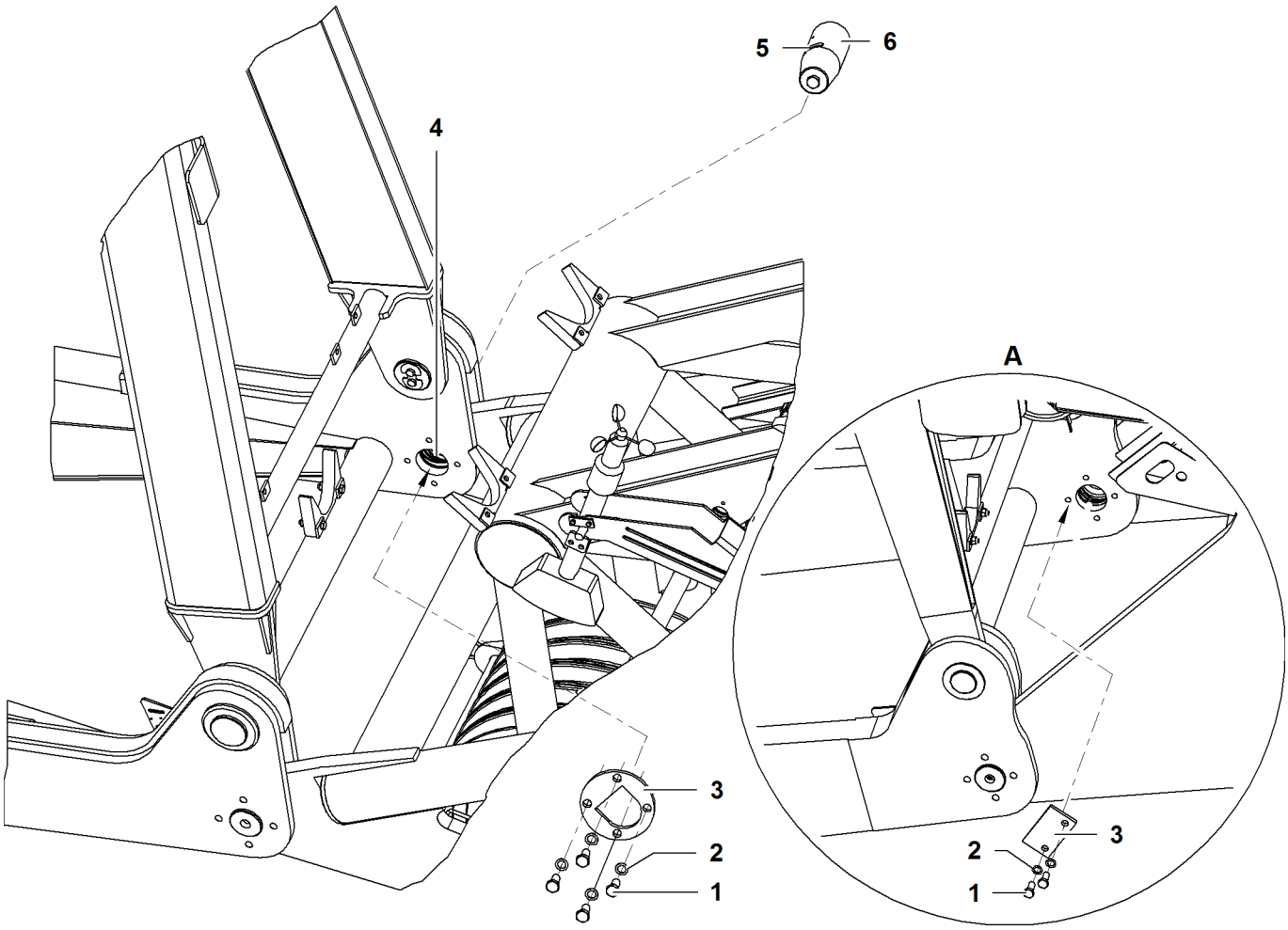

LWN/LR.x/V03.01//Auslieferung/2015-06-03/en

Fig. 4659: Bolting the jib base section to the boom head section

A Detail jib base section 0906, 1507, 1713

3 Securing element

6 Pin

See next page for continuation of the image legend

copyright by LIEBHERR

1 Screw (4x)
2 Washer (4x)
4 Pin connection point (2x)
5 Notch

Note

Liebherr recommends:
▶ To make assembly and disassembly easier, lubricate pins.

When the pin connection points **4** of the jib base section and the main boom head section line up:
▶ Pin **6** must be driven in from the outside.

Note

▶ Observe position of the notch **5** in the pin **6**.

▶ If necessary, use a screwdriver to turn the pin into the correct position.

▶ Slide locking element **3** over the pin **6** and place in notch **5**.

Type of jib	Torque	Screw treatment
0806	291 Nm 215 ft-lb	grease-free thread, treat with LOCTITE 243
0906	Nm ft-lb	grease-free thread, treat with LOCTITE 243
1008	291 Nm 215 ft-lb	grease-free thread, treat with LOCTITE 243
1507	Nm ft-lb	grease-free thread, treat with LOCTITE 243
1713	Nm ft-lb	grease-free thread, treat with LOCTITE 243

Tab. 529: Torque screws fixed jib

▶ Secure the locking element **3** with pins **1** and washers **2**.

▶ Repeat the pin insertion process on the opposite side.

7.19.6 Pinning the jib to the jib base section

▶ Raise the jib up to the jib base section.

When the pin connection points of the jib section and jib base section line up:
▶ Drive in pins from the outside in.

7.19.7 Pinning the pendant straps

▶ Remove safety pins from the transport brackets for pendant straps.

LWN/LR.x/V03.01//Auslieferung/2015-06-03/en

copyright by
LIEBHERR

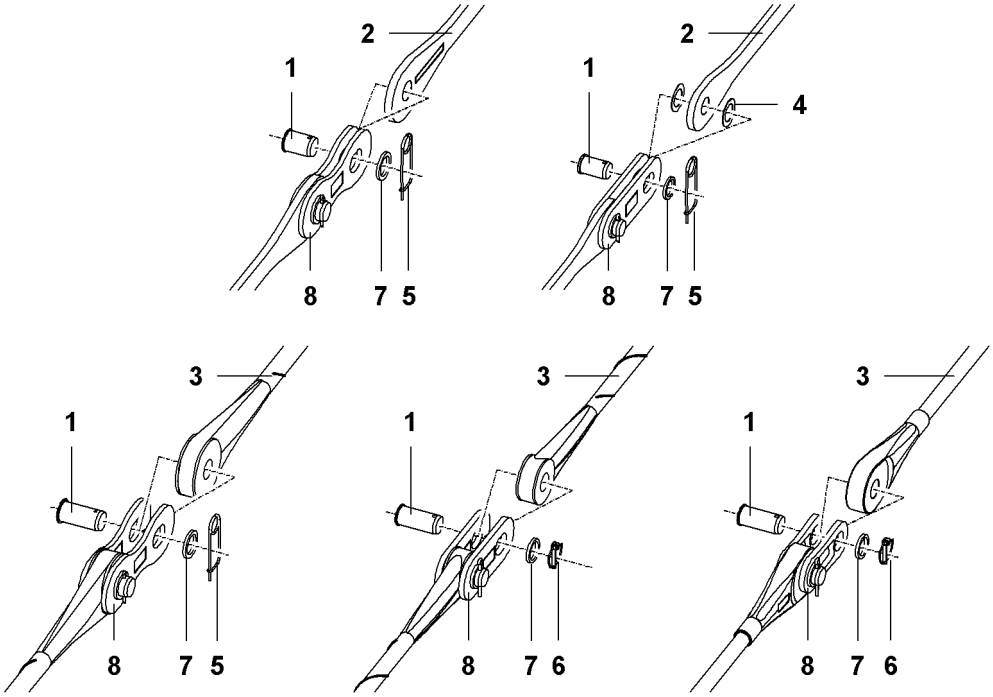

Fig. 4660: Bolt the pendant straps (schematic diagram of various pendant straps)

1	Pin	**5**	Safety pin
2	Steel pendant strap	**6**	Linch pin
3	Carbon-fibre pendant strap	**7**	Washer
4	Plastic washer (2x)	**8**	Connecting link

▶ Remove the pin **1** on the connecting link **8**.

▶ Position the pendant strap **2, 3** between the two coupling links **8**.
or

If the pendant strap has plastic washers **4**:
Position the pendant strap **2** with plastic washers **4** on both sides between the two connecting links **8**.

▶ Insert pin **1** and secure with washers **7** and safety pin **5** or linch pin **6**.

7.19.8 Attaching connecting links to the boom head section

WARNING
The boom will move when the upper double-taper pins on the boom head section are unpinned!
Serious injury.

▶ Support the main boom head section and the pinned section on wooden blocks.

▶ Keep the upper double-taper pins on the boom head section free from tension.

▶ Remove the double-taper pins, safety pins and washers from the upper pin connection points on the boom head section.

LWN/LR.x/V03.01//Auslieferung/2015-06-03/en

copyright by
LIEBHERR

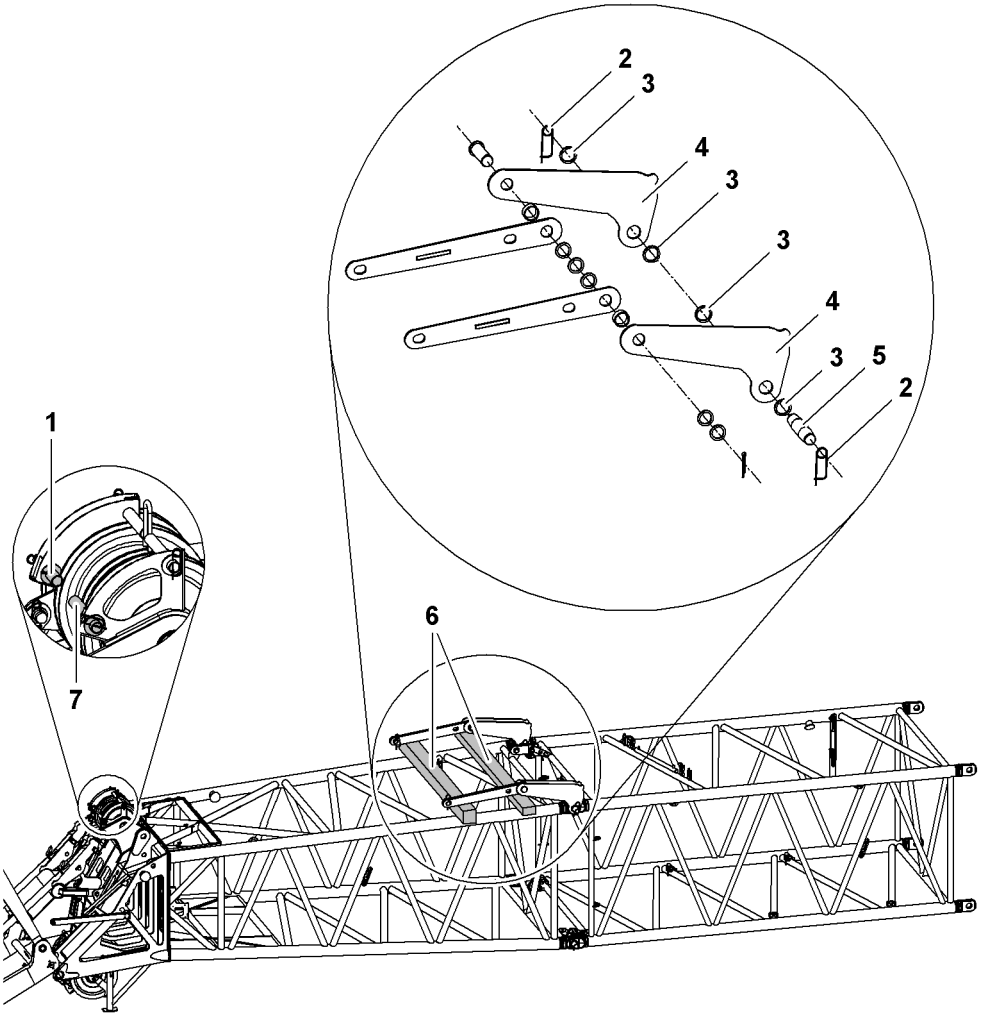

Fig. 4661: Attaching connecting links to the boom head section

1	Rope protection pipe	**5**	Double-taper pins (2x) of A-frame 2 equaliser
2	Safety pins (4x)	**6**	Wooden blocks (2x)
3	Washers (8x)	**7**	Rope protection pipe
4	Connecting links (4x)		

▶ Chock with wooden blocks **6**.

▶ Pin connecting links **4** with double-taper pins **5** from A-frame 2 equaliser to boom head section.

▶ Secure the double-taper pins with washers **3** and safety pins **2**.

NOTICE
Wrong rope protection pipe is used with a main boom + fixed jib configuration!
Damage to winch1/winch2 rope.

If the rope on winch1 is reeved over the jib head section:
▶ remove rope protection pipe **1**.

If the rope on winch2 is reeved over the jib head section:
▶ remove rope protection pipe **7**.

▶ remove rope protection pipes **1 + 7** if required.

LWN/LR.x/V03.01//Auslieferung/2015-06-03/en

copyright by
LIEBHERR

7.19.9 Attaching the main boom (self-assembly system)

Note
Particular approach when using the self-assembly system!

▶ Attach the main boom to the basic machine.

7.19.10 Pinning the A-frame 2 equaliser to the main boom

To pin the equalizer of A-frame2 to the connecting links on the main boom, A-frame2 must be erected using the rope of winch1/winch2 as far as necessary to enable pinning.

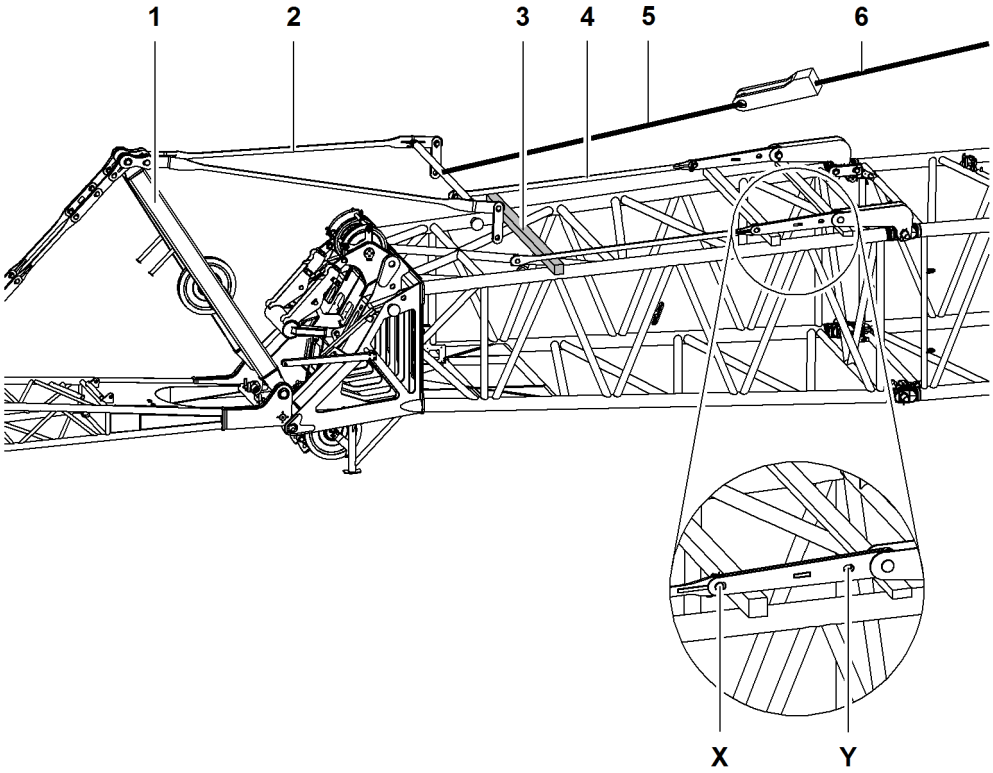

Fig. 4662: Pinning the A-frame 2 equaliser to the main boom

1	A-frame 2	**5**	Round sling
2	A-frame 2 equaliser	**6**	Rope of winch1/winch2
3	Wooden block	**X**	Tensioning position 30°
4	Jib backstay straps (2x)	**Y**	Tensioning position 15°

▶ Separate the jib backstay straps **4** from A-frame 2 equaliser **2**.

WARNING
Connecting links are bolted incorrectly on the 0906 jib!
The 0906 jib could topple backwards during crane operation.

▶ Only pin the connecting links at tensioning position 30° **X**.

▶ Pin jib backstay straps **4** on connecting links at tensioning position 15° **Y** or 30° **X** (jib 0906 only at 30°).

▶ Secure the pins with washers and safety pins.

LWN/LR.x/V03.01//Auslieferung/2015-06-03/en

- ▶ Attach rope of winch1/winch2 **6** with round sling **5** and pocket lock to equalizer A-frame2 **2**.
- ▶ Wind up rope of winch1/winch2.
  ▷ A-frame 2 **1** will move backwards.
- ▶ Pin the jib backstay straps to the A-frame 2 equaliser.
- ▶ Secure the pins with washers and safety pins.

WARNING
Tilting-back supports are missing!
The jib could topple backwards during crane operation.

- ▶ Fit tilting-back supports.

- ▶ Re-fit the tilting-back supports that were removed earlier.

If the jib backstay straps are pinned:
- ▶ Unwind rope of winch1/winch2.
- ▶ Remove rope of winch1/winch2 from pocket lock.
- ▶ Remove the pocket lock from the round sling and place in temporary storage.

Note

If rope of winch1/winch2 is not subsequently reeved:
- ▶ Wind up rope of winch1/winch2.

7.19.11 Pinning the jib backstay straps (jib 1507)

- ▶ Remove locking springs of transport brackets for jib backstay straps.

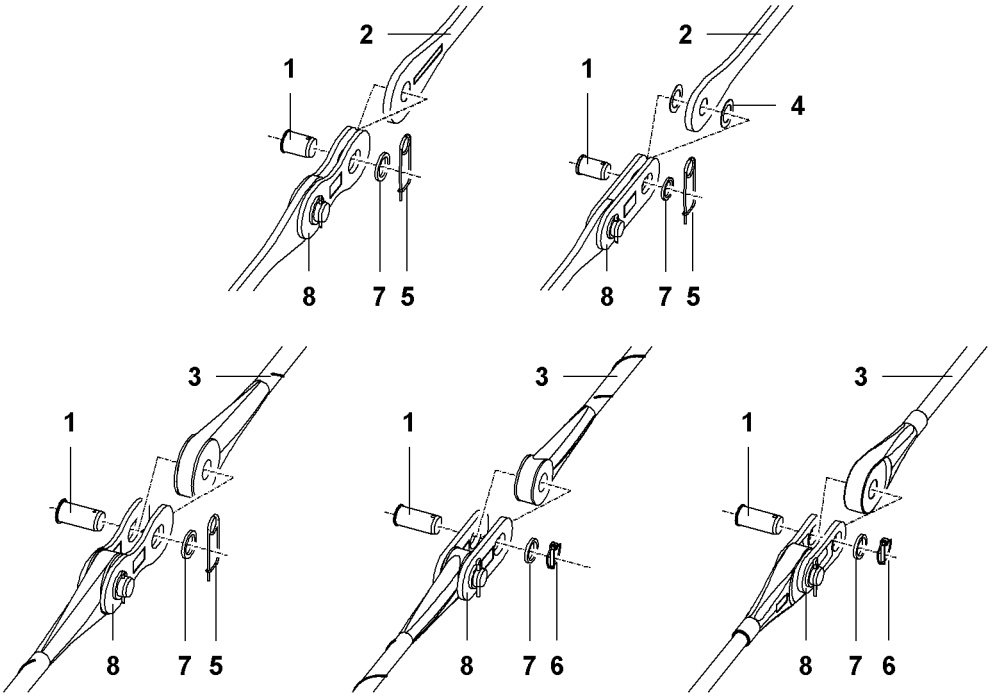

Fig. 4663: Diagram of various jib backstay straps

1 Pin
5 Locking spring

See next page for continuation of the image legend

LWN/LR.x/V03.01//Auslieferung/2015-06-03/en

copyright by
LIEBHERR

2	Jib backstay strap (steel)	**6**	Linchpin
3	Jib backstay strap (CF)	**7**	Washer
4	Plastic washers (2x)	**8**	Connecting link

▶ Remove pin **1** on connecting link **8**.

▶ Position jib backstay strap **2, 3** between the two connecting links **8**.

If the jib backstay strap has plastic washers **4**:

▶ Position the jib backstay strap **2** with plastic washers **4** on both sides between the two connecting links **8**.

▶ Insert pin **1** and secure with washers **7** and locking spring **5** or linchpin **6**.

7.19.12 Installing the connecting elements and spacer brackets on jib backstay straps (jib 1507)

NOTICE
Incorrect installation positions of connecting elements and spacer brackets!
Damage to pendant straps and jib backstay straps.

▶ Install connecting elements and spacer brackets according to system-relevant information.

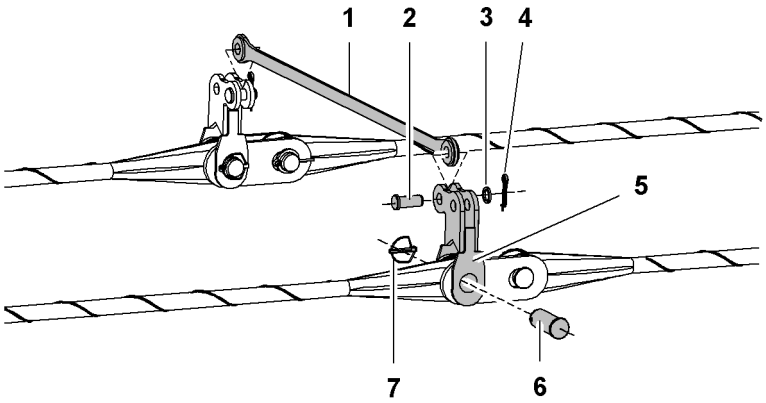

Fig. 4664: Installing connecting elements and spacer brackets on jib backstay straps

1	Spacer bracket	**5**	Connecting element
2	Pin	**6**	Pin
3	Washer	**7**	Linchpin
4	Locking spring		

▶ Pin connecting element **5** and jib backstay strap.

▶ Secure pin **6** with washer and linchpin **7**.

▶ Pin connecting element **5** and spacer bracket **1**.

▶ Secure pin **2** with washer **3** and locking spring **4**.

7.19.13 Pinning the equalizer of A-frame2 to the main boom (jib 1507)

To pin the equalizer of A-frame2 to the connecting links on the main boom, A-frame2 must be erected using the rope of winch1/winch2 as far as necessary to enable pinning.

LWN/LR.x/V03.01//Auslieferung/2015-06-03/en

NOTICE
Incorrect fixing of round sling to A-frame2 equalizer!
Damage to spacer bar.

▶ Ensure that round sling is not attached to link plate.

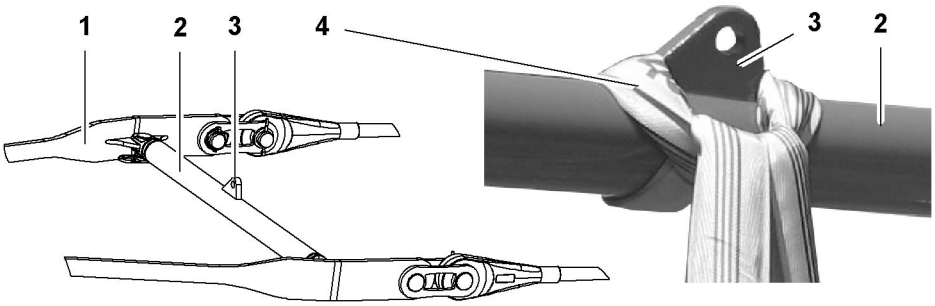

Fig. 4665: Attaching the round sling to A-frame2 equalizer

1	A-frame2 equalizer	**3**	Link plate
2	Spacer bar	**4**	Round sling

▶ Attach rope of winch1/winch2 with round sling and pocket lock to A-frame2 equalizer **1**.

▶ Wind up rope of winch1/winch2.
▷ A-frame2 moves backwards.

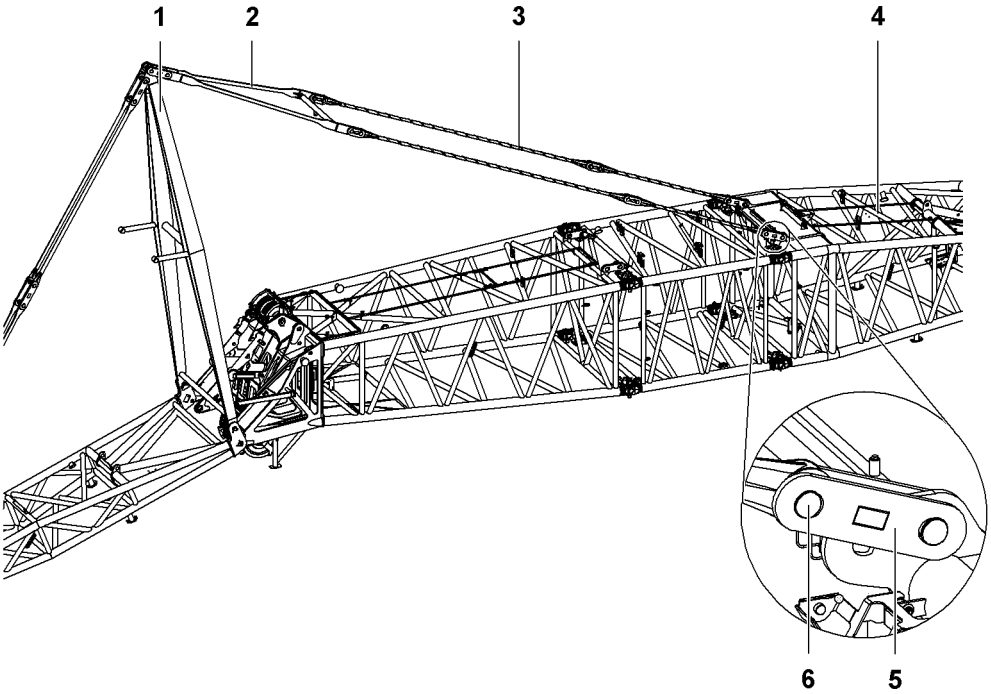

Fig. 4666: Pinning the A-frame2 equalizer with connecting links to the main boom

1	A-frame2	**4**	Jib base section
2	A-frame2 equalizer	**5**	Connecting link (2x)
3	Jib backstay strap (2x)	**6**	Pin (2x)

▶ Pin jib backstay straps **3** using connecting links **5**.

LWN/LR.x/V03.01//Auslieferung/2015-06-03/en

copyright by
LIEBHERR

WARNING
Tilting-back supports are missing!
Jib could topple backwards during crane operation.

▶ Install tilting-back supports.

▶ Secure pins **6** with washers and locking springs.

After pinning the jib backstay straps:
▶ Unwind rope of winch1/winch2.

▶ Remove rope of winch1/winch2 from rope lock.

▶ Remove rope lock from round sling and place in temporary storage.

Note

If winch1 or winch2 rope is not reeved subsequently:
▶ Wind up winch1 or winch2 rope.

7.19.14 Connect the electric cables

NOTICE
Electric cables have been handled incorrectly!
Damage to electric cable and plug.

▶ Do not pull the electric cable over sharp-edged objects.

▶ Do not crush or kink the electric cable.

▶ Keep the plug clean.

▶ Disconnect the electric cable from the dummy receptacle on the jib base section.

▶ Connect the electric cable to the terminal box on the main boom head section and secure using retaining clips.
▷ The boom head section and jib base section electric cables are connected.

The electric cable to the jib head section is rolled on the cable drum on the jib base section.

▶ Disconnect both electric cables from the terminal box on the jib base section.

NOTICE
Electric cable has been unwound incorrectly!
Electric cable may be damaged.

▶ Push the electric cable in the cable drum into the side opening of the cable drum.

▶ Loosen the pin on the axle of the cable drum.

▶ Unwind the electric cables from the cable drum and pull it inside the jib to the jib head section.

▶ Connect the electric cable to the terminal box on the jib head section and secure using retaining clips.

Two fixing holes are provided under the terminal box to relieve the strain on the plug.

LWN/LR.x/V03.01/Auslieferung/2015-06-03/en

copyright by
LIEBHERR

- ▶ Clip both carabiners on the cable sock into the fixing holes.
- ▶ Fix the pin on the axle of the cable drum.
- ▶ Reconnect the electric cable in the cable drum to the terminal box on the jib base section.
  - ▷ The jib base section and jib head section electric cables are connected.

If an auxiliary jib is fitted:
- ▶ Plug the auxiliary jib electric cable into the jib head section.

7.19.15 Installing the obstacle warning light

Note
Use of the obstacle warning light is prescribed by national or regional regulations!

- ▶ Before using the machine, familiarise yourself with national and local regulations.

Ensure that the following conditions are fulfilled:
- ❑ Anemometer is not installed.

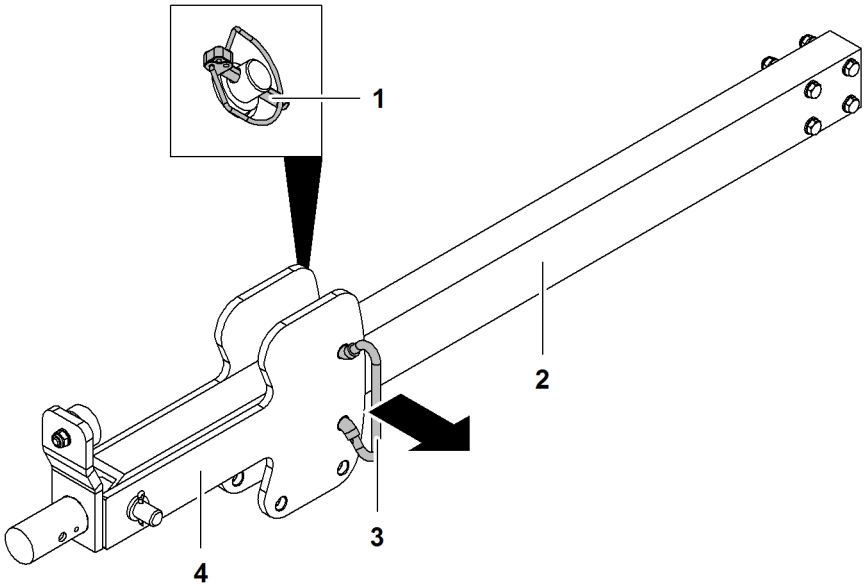

Fig. 4667: Moving the pendulum into the working position

1	Linchpins (2x)	**3**	Locking element
2	Mount	**4**	Pendulum

The pendulum **4** is secured on the mount **2** for machine transport.

- ▶ Remove the linchpin **1** of the locking element **3**.
- ▶ Remove **3** locking element.
- ▶ Swing pendulum **4** down.
- ▶ Slide locking element **3** through pendulum **4** and secure with linchpins **1**.

LWN/LR.x/V03.01//Auslieferung/2015-06-03/en

copyright by LIEBHERR

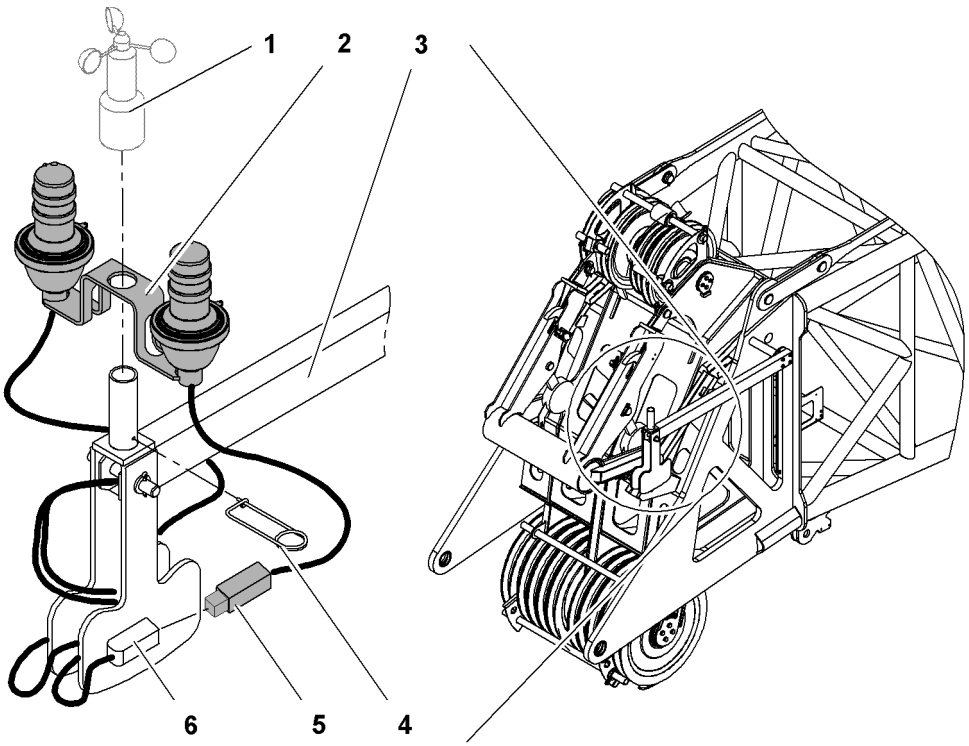

Fig. 4668: Installing the obstacle warning light

1	Anemometer	**4**	Safety pin
2	Obstacle warning light	**5**	Plug
3	Mount	**6**	Coupling

▶ Place obstacle warning light **2** on pipe.
  ▷ Obstacle warning light is secured by the pipe and axis on the bracket **3**.

NOTICE
Safety pin is not fit properly!
Damage to the electric cable.

▶ Insert the safety pin carefully.

▶ Insert the safety pin **4**.
  ▷ Obstacle warning light **2** is secured.

▶ Connect the plug **5** to the coupling **6**.

▶ Lock plug **5**.

7.19.16 Fitting the anemometer

Ensure that the following conditions are fulfilled:

❑ Obstacle warning light is installed (if available).

LWN/LR.x/V03.01//Auslieferung/2015-06-03/en

copyright by
LIEBHERR

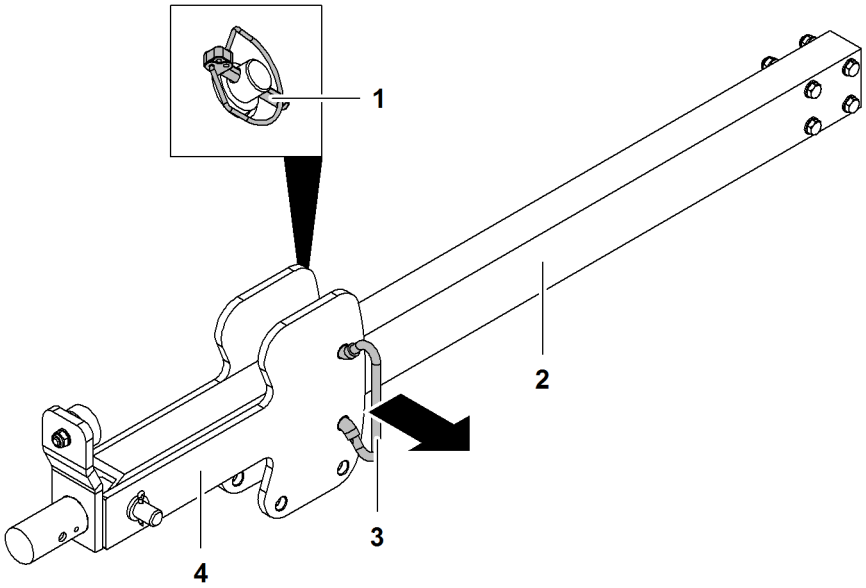

Fig. 4669: Moving the pendulum into the working position

1	Linchpins (2x)	**3**	Locking element
2	Mount	**4**	Pendulum

The pendulum **4** is secured on the mount **2** for machine transport.

- ▶ Remove the linchpin **1** of the locking element **3**.
- ▶ Remove **3** locking element.
- ▶ Swing pendulum **4** down.
- ▶ Slide locking element **3** through pendulum **4** and secure with linchpins **1**.

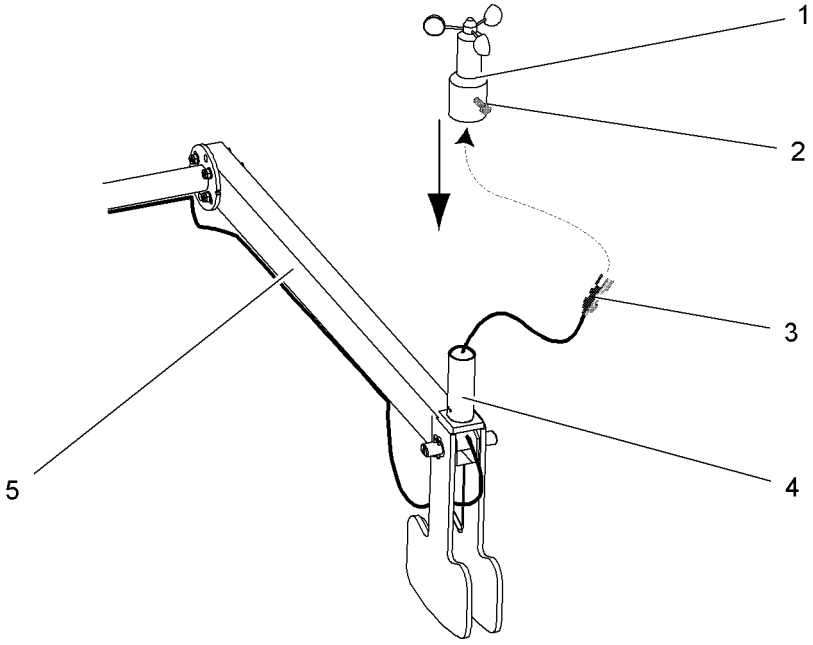

Fig. 4670: Fitting the anemometer

1	Anemometer	**4**	Tube
2	Screw	**5**	Mount
3	Plug		

LWN/LR.x/V03.01//Auslieferung/2015-06-03/en

copyright by
LIEBHERR

- ▶ Remove cover from the plug **3**.
- ▶ Plug in the connector **3** at the bottom of the anemometer **1**.
- ▶ Secure plug **3** with nut.

NOTICE
Anemometer is not fit properly!
Damage to the electric cable.

- ▶ Pull the extended electric cable through the tube before pushing on the anemometer.

- ▶ Position the anemometer **1** on the tube **4**.
- ▶ Securing the anemometer on the mount: Tighten the screw **2**.

The rotor of the anemometer must be free to rotate slightly.

- ▶ Test the anemometer: rotate the rotor slightly and note the value on the monitor.
  ▷ The wind speed value will increase.

7.19.17 Moving the lightning rods* into working position

Installation position of lightning rods with fixed jib

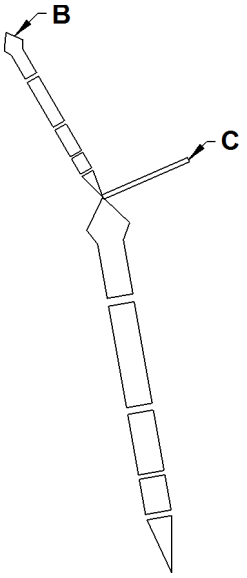

Fig. 4671: Installation position of lightning rods with fixed jib

B Fixed jib head **C** A-frame2

Boom configuration	Number of lightning rods	Installation positions
Main boom + fixed jib	2	B + C

Tab. 530: Installation position and number of lightning rods with fixed jib

LWN/LR.x/V03.01//Auslieferung/2015-06-03/en

copyright by LIEBHERR

Moving the lightning rods* on the fixed jib head into working position

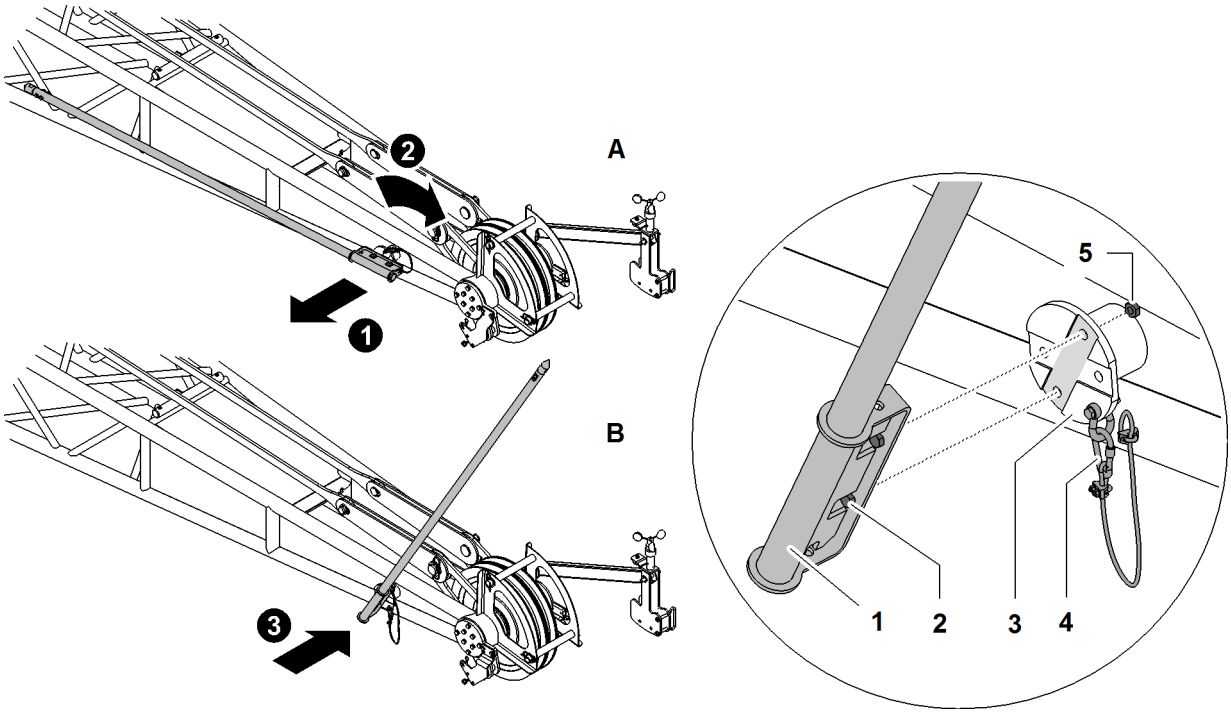

Fig. 4672: Moving the lightning rods on the fixed jib head into working position (illustration of principle)*

A	Transport position	**2**	Screw (2x)	**5**	Nut (2x)
B	Working position	**3**	Mounting plate		
1	Lightning rod	**4**	Safety rope		

- ▶ Undo safety rope **4**.
- ▶ Undo nuts **5**.
- ▶ Undo screws **2**.
- ▶ Move lightning rod **1** from transport position **A** to working position **B**.

Note
Liebherr recommends:

- ▶ Grease threads of the screws **2**.

- ▶ Attach lighting rod **1** withscrews **2**.
- ▶ Lock screws **2** with nuts **5**.

NOTICE
Safety rope not attached!
Dropping parts.

- ▶ Ensure that safety rope **4** is attached.

- ▶ Attach safety rope **4**.

LWN/LR.x/V03.01//Auslieferung/2015-06-03/en

copyright by
LIEBHERR

NOTICE
Tip not installed!
Improperly deflected current.
Dropping parts.

- ▶ Ensure that the tip on the lightning rod **1** is installed.
- ▶ Ensure that the screws of the tip are tightened.

- ▶ Ensure that the tip on the lightning rod **1** is installed.
- ▶ Ensure that the screws of the tip are tightened.

Moving the lightning rods* on A-frame2 into working position

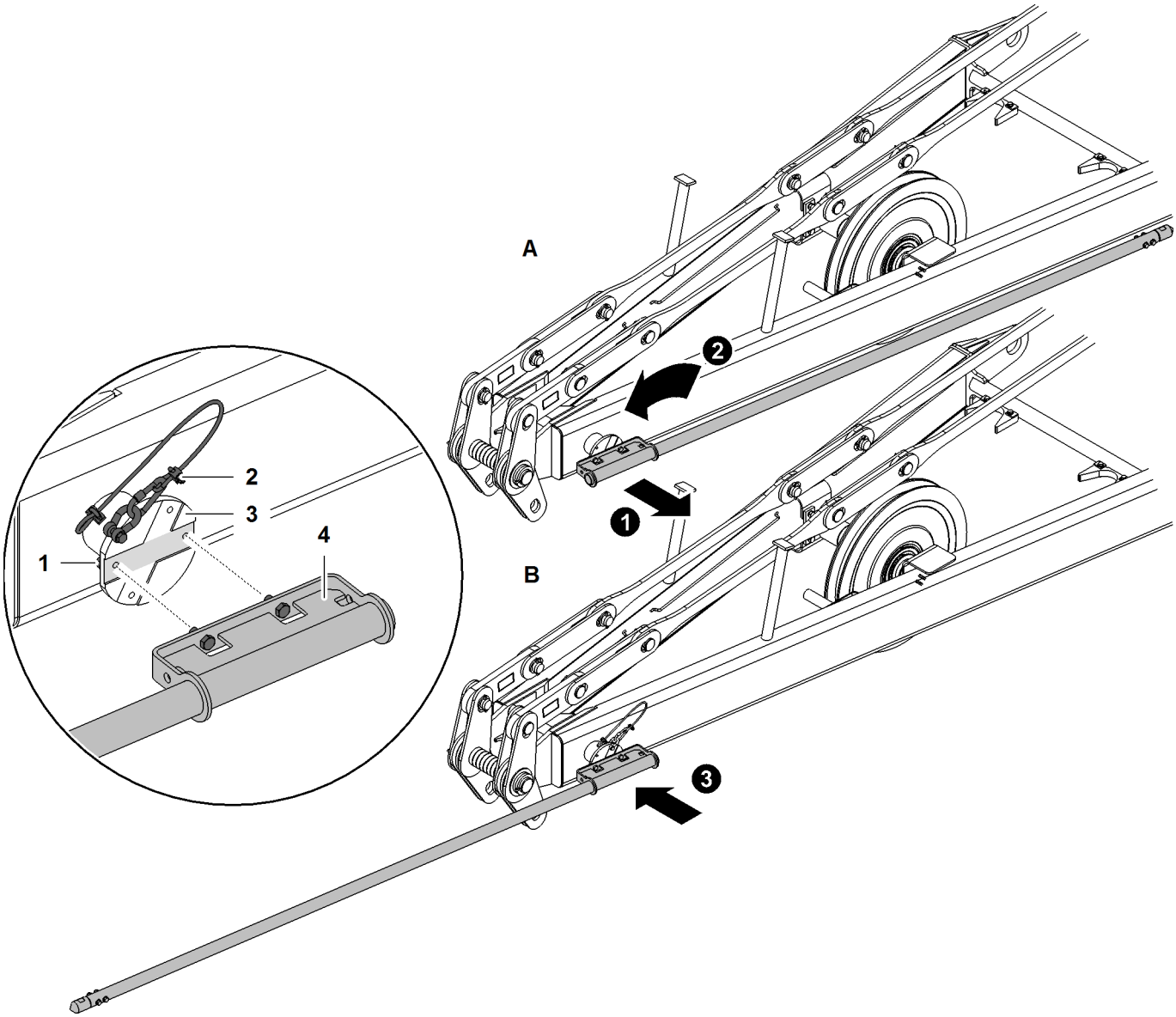

Fig. 4673: Moving the lightning rods on A-frame2 into working position (illustration of principle)*

A	Transport position	**1**	Nut (2x)	**3**	Screw (2x)
B	Working position	**2**	Safety rope	**4**	Lightning rod

copyright by LIEBHERR

- ▶ Undo safety rope **2**.
- ▶ Undo nuts **1**.
- ▶ Undo screws **3**.
- ▶ Move lightning rod **4** from transport position **A** to working position **B**.

Note
Liebherr recommends:

- ▶ Grease threads of the screws **3**.

- ▶ Attach lighting rod **4** withscrews **3**.
- ▶ Lock screws **3** with nuts **1**.

NOTICE
Safety rope not attached!
Dropping parts.

- ▶ Ensure that safety rope **2** is attached.

- ▶ Attach safety rope **2**.

NOTICE
Tip not installed!
Improperly deflected current.
Dropping parts.

- ▶ Ensure that the tip on the lightning rod **4** is installed.
- ▶ Ensure that the screws of the tip are tightened.

- ▶ Ensure that the tip on the lightning rod **4** is installed.
- ▶ Ensure that the screws of the tip are tightened.

7.19.18 Reeving the rope

The rope must be reeved as specified in the rope reeving diagram according to the boom and application requirements.

WARNING
Unsecured walking on the boom!
Risk of falling off the boom.

- ▶ A fall arrest system must be worn when working on the boom to prevent falling.

Ensure that the following conditions are satisfied:
- ❑ Cylinder adjustment functions are on.

LWN/LR.x/V03.01//Auslieferung/2015-06-03/en

copyright by
LIEBHERR

Reeving the rope using a rope reeving winch

Dismantling rope protection pipes

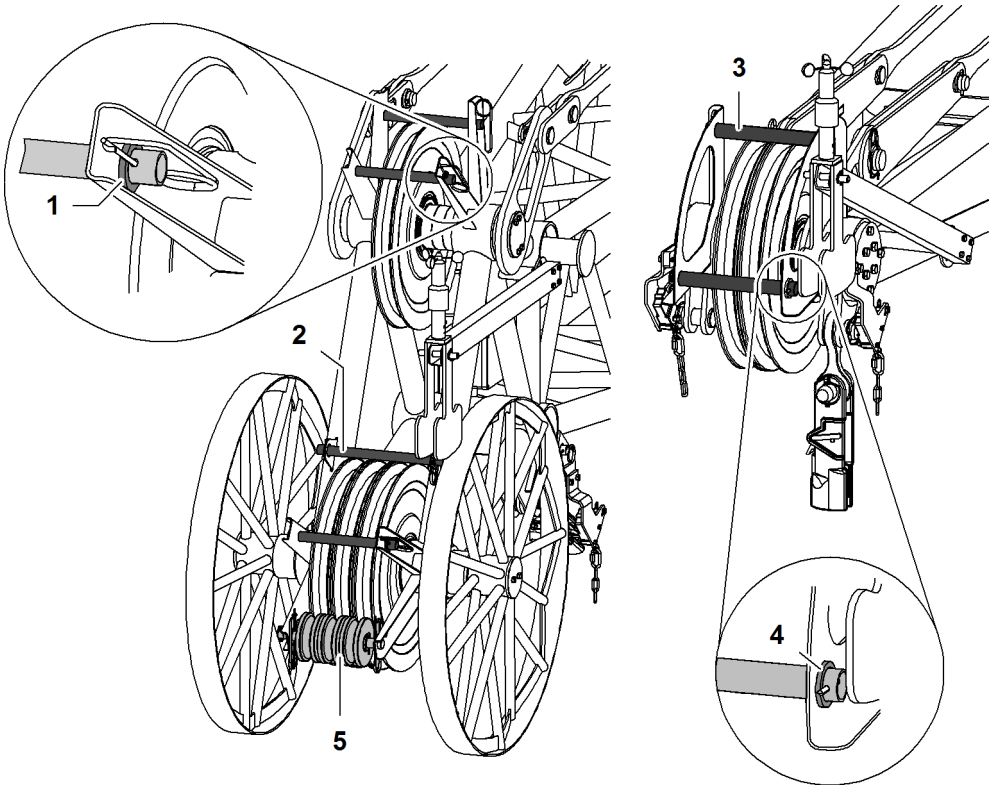

Fig. 4674: Rope protection pipes jib head section (0806, 0906, 1008, 1507, 1713)

1 + 4 Washer
2 + 3 Rope guard tube (4x)
3 Rope protection pipe (2x)
4 Washer
5 Rope protection rollers package

The rope protection pipes are secured with a cotter pin on one side and with a safety pin on the other side.

NOTICE
Inadmissible operation of winch1/winch2 below 10° jib angle!
Damage to jib head section.

▶ Make sure that winch1/winch2 are not operated below 10° jib angle.

▶ Remove the safety pin and washer **1 + 4**.

▶ Remove the rope protection pipes **2 + 3**.

Dismantling the rope protection rollers package on the jib head section 1713

With the jib head section 1713, the rope protection rollers package must be removed as well.

LWN/LR.x/V03.01//Auslieferung/2015-06-03/en

copyright by
LIEBHERR

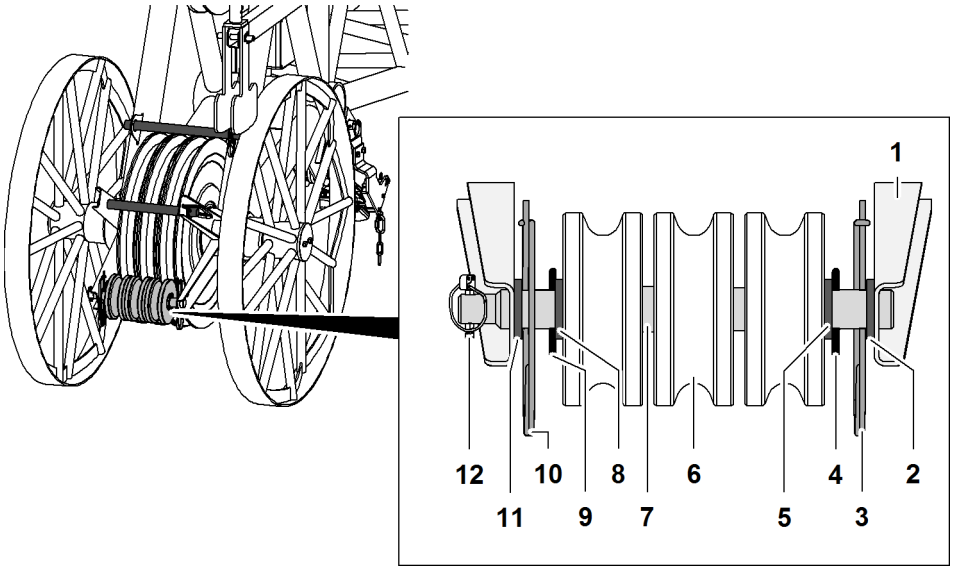

Fig. 4675: Rope protection rollers package

1	Mount	**7**	Shaft
2	Washer	**8**	Washer
3	Safety pin	**9**	Cotter pin
4	Cotter pin	**10**	Safety pin
5	Washer	**11**	Washer
6	Pulley	**12**	Linchpin

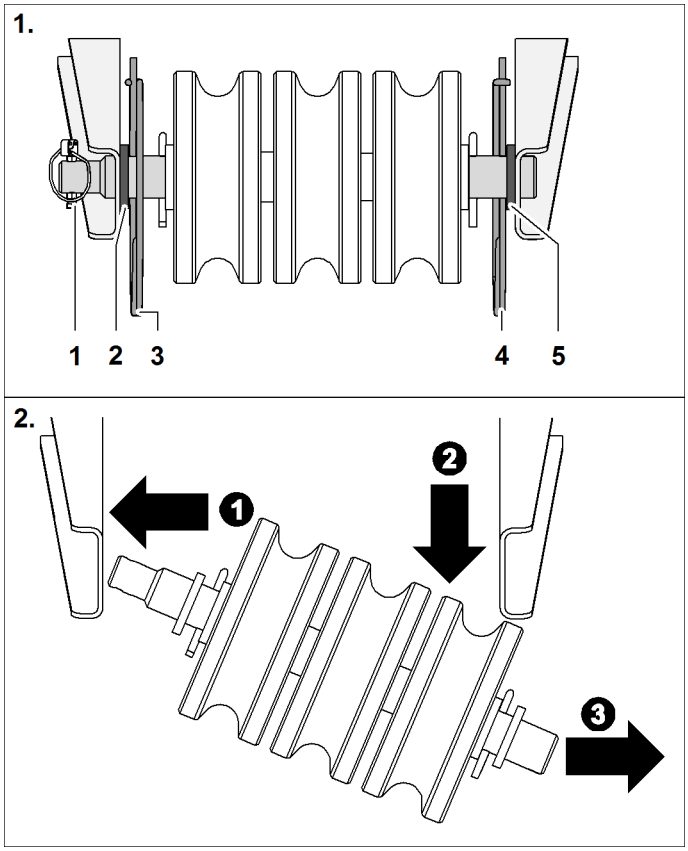

Fig. 4676: Dismantling the rope protection rollers package

1	Linchpin	**4**	Safety pin

See next page for continuation of the image legend

LWN/LR.x/V03.01//Auslieferung/2015-06-03/en

copyright by
LIEBHERR

2 Washer
3 Safety pin
5 Washer

▶ Remove the linchpin **1**.

▶ Remove safety pin **3 + 4**.

▶ Take rope protection rollers package off the support.
▷ Rope protection rollers package is dismantled.

Reeving the rope

▶ Open up the rope guide (if present).

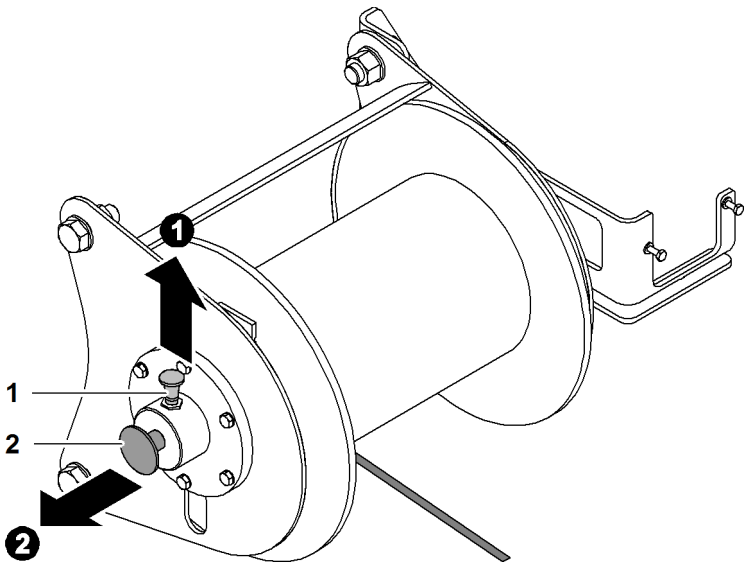

Fig. 4677: Setting the rope lug to free-wheel

1 Locking element
2 Shaft

Note

Liebherr recommends:
▶ Making it easier to pull out the axle **2**: move the rope reeving winch manually back and forth.

▶ Pull up the locking element **1** and pull out the axle **2** at the same time.
▷ Rope reeving winch is set to free-wheel.

LWN/LR.x/V03.01//Auslieferung/2015-06-03/en

copyright by LIEBHERR

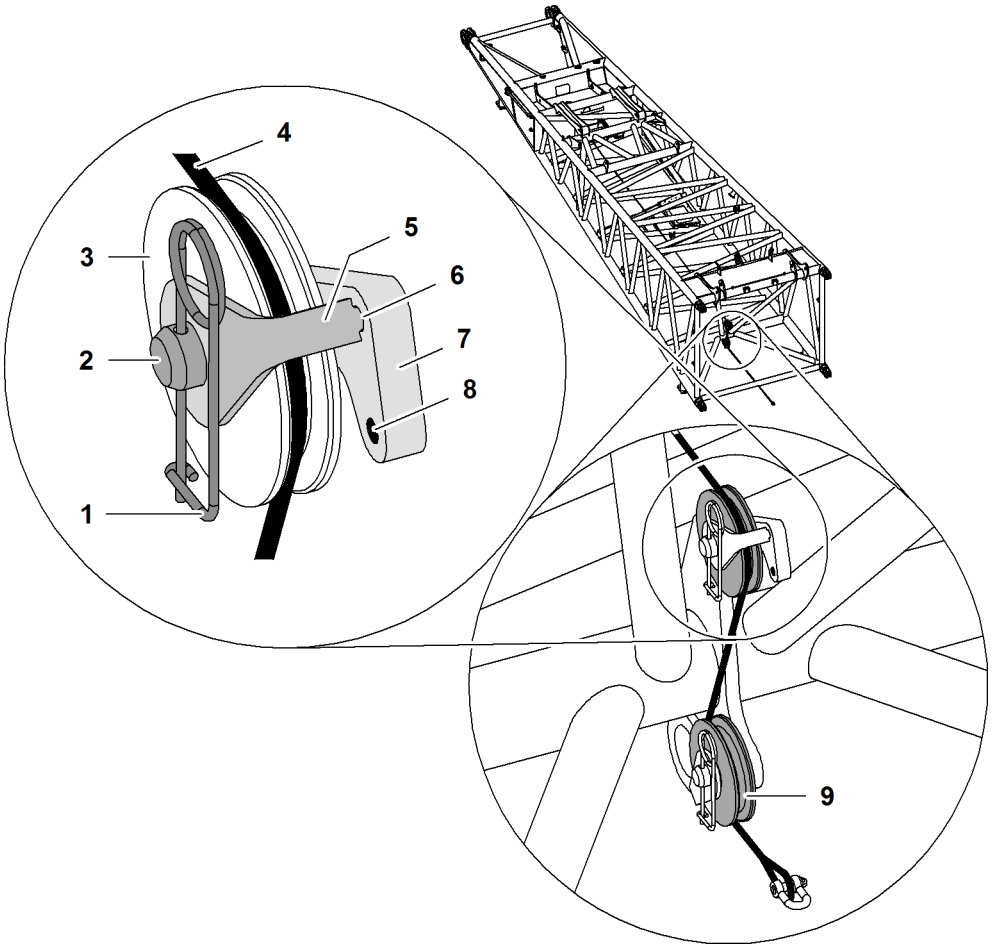

Fig. 4678: Reeving in the rope of the rope reeving winch

1	Safety pin	**6**	Recess
2	Shaft	**7**	Support with recesses
3	Upper pulley	**8**	Recess
4	Rope of the rope reeving winch	**9**	Lower pulley
5	Locking element		

Depending on the machine type, the mounting **7** may have one or two recesses.

▶ Remove safety pins **1**.

▶ Remove **5** securing element.

▶ Place rope of the rope reeving winch **4** across the top pulley **3**.

NOTICE
Wrongly mounted locking element!
Rope of the rope reeving winch jumps out of pulley.

▶ Make sure that the locking element **5** is mounted in recess **6**.

▶ Attach locking element **5** to axle **2** and guide in recess **6**.

▶ Attach the safety pin **1**.

▶ Repeat procedure on bottom pulley **9**.
▷ Rope of the rope reeving winch is guided through pulleys.

▶ Pull the luffing rope under the boom to the boom head.

▶ Reeve in the rope of the rope reeving winch according to reeving plan.

LWN/LR.x/V03.01//Auslieferung/2015-06-03/en

copyright by
LIEBHERR

- ▶ Pull the luffing rope next to the boom towards the basic machine.
- ▶ Lift luffing rope onto boom.
- ▶ Connect luffing rope with rope of winch1/winch2.

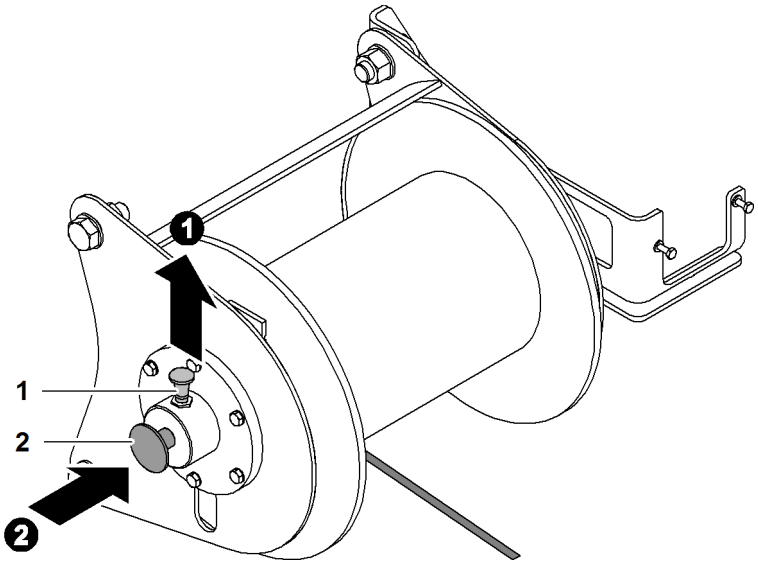

Fig. 4679: Stopping the free-wheel of the rope reeving winch

1 Locking element **2** Shaft

Note

Liebherr recommends:

- ▶ Making it easier to press in the axle **2**: move the rope reeving winch manually back and forth.

- ▶ Pull up the locking element **1** and press in the axle **2** at the same time.
  - ▷ Free-wheel of the luffing rope is deactivated.

WARNING

Never stand in the immediate vicinity of the rope reeving winch or the luffing rope!

- ▶ Make sure that no-one is standing in the danger area.
- ▶ Leave the danger area.

- ▶ Press and hold the *Rope reeving winch* button on control panel *X11*.
  - ▷ Rope reeving winch reeves in the rope of the rope reeving winch and tensions the rope of winch1/winch2.

If rope of winch1/winch2 is in the 8th rope layer (only with free-fall winch 130 kN (29,230 lb_f)):

- ▶
  - ▷ The 3-rope windings limit switch is bypassed.

There must be no slacking of the rope when unwinding.

- ▶ Unwind the rope of winch1/winch2 up to the rope fixing point.
- ▶ Press the *Rope reeving winch* button on control panel *X11*.
  - ▷ Rope reeving winch switched off.

LWN/LR.x/V03.01/Auslieferung/2015-06-03/en

copyright by LIEBHERR

- Remove rope of the rope reeving winch from the rope of winch1/winch2.

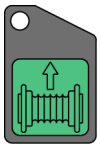

- Press and hold the *Rope reeving winch* button on control panel *X11*.
  - ▷ Luffing rope is being reeved.

- Press the *Rope reeving winch* button on control panel *X11*.
  - ▷ Rope reeving winch switched off.
- Close and secure the rope guide (if present).

Mounting the rope protection rollers package on jib head section 1713

NOTICE
Wrongly installed washers!
Rope protection rollers package falls out of the support.
Damage to jib head section.

- Ensure proper installation position of the washers.

LWN/LR.x/V03.01//Auslieferung/2015-06-03/en

copyright by
LIEBHERR

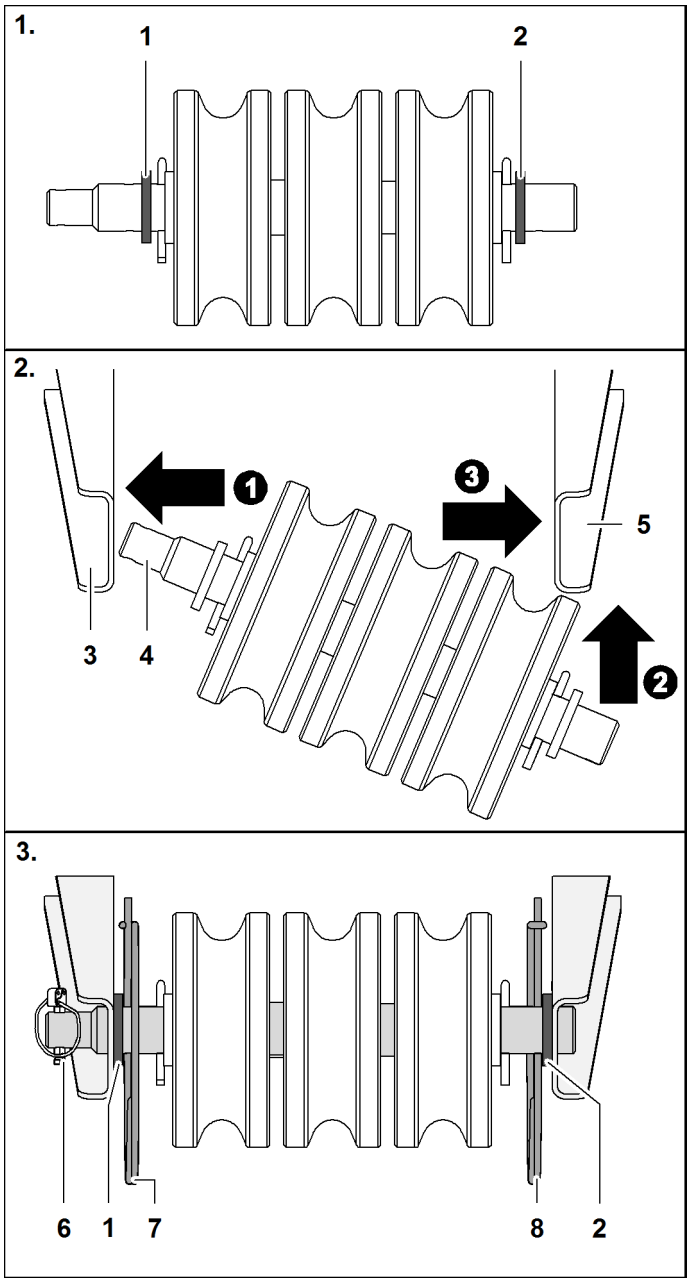

Fig. 4683: Mounting the rope protection rollers package on the jib head section

1	Washer	**5**	Mount
2	Washer	**6**	Linchpin
3	Mount	**7**	Safety pin
4	Shaft	**8**	Safety pin

▶ Place washers **1 + 2** on axle.

▶ Insert axle **4** of the rope protection rollers package into support **3**.

▶ Insert axle **4** into support **5**.

▶ Put washers **1 + 2** into position.

▶ Install safety pins **7 + 8**.

▶ Install linchpin **6**.
▷ Rope protection rollers package is installed.

LWN/LR.x/V03.01//Auslieferung/2015-06-03/en

copyright by
LIEBHERR

Installing rope protection pipes

▶ Mount and secure rope protection pipes.

Reeving the rope without using a rope reeving winch

▶ Remove the rope protection pipes on the boom and the pulley block.

▶ Open up the rope guide (if present).

▶ Connect auxiliary rope with the rope of winch1/winch2.

▶ Pull the auxiliary rope next to the boom as far as the boom head.

▶ Hoist the auxiliary rope onto the boom.

▶ Reeve the auxiliary rope according to the rope reeving system.

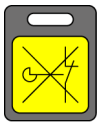

If rope of winch1/winch2 is in the 8th rope layer (only with free-fall winch 130 kN (29,230 lb_f)):

▶ Press the *Bypass limit switch* button on control panel *X23*.
  ▷ The 3-rope windings limit switch is bypassed.

There must be no slacking of the rope when unwinding.

▶ Unwind the rope of winch1/winch2 up to the rope fixing point.

▶ Remove auxiliary rope from the rope of winch1/winch2.

▶ Close and secure the rope guide (if present).

▶ Mount and secure rope protection pipes.

7.19.19 Attaching the rope fixing point

DANGER
Incorrect installation of pins and pocket lock!
Load breakaway.

▶ Fit pins and pocket lock as instructed.

The collar of the pins and the pocket lock openings are decisive for the installation direction of the rope fixing point.

LWN/LR.x/V03.01//Auslieferung/2015-06-03/en

copyright by
LIEBHERR

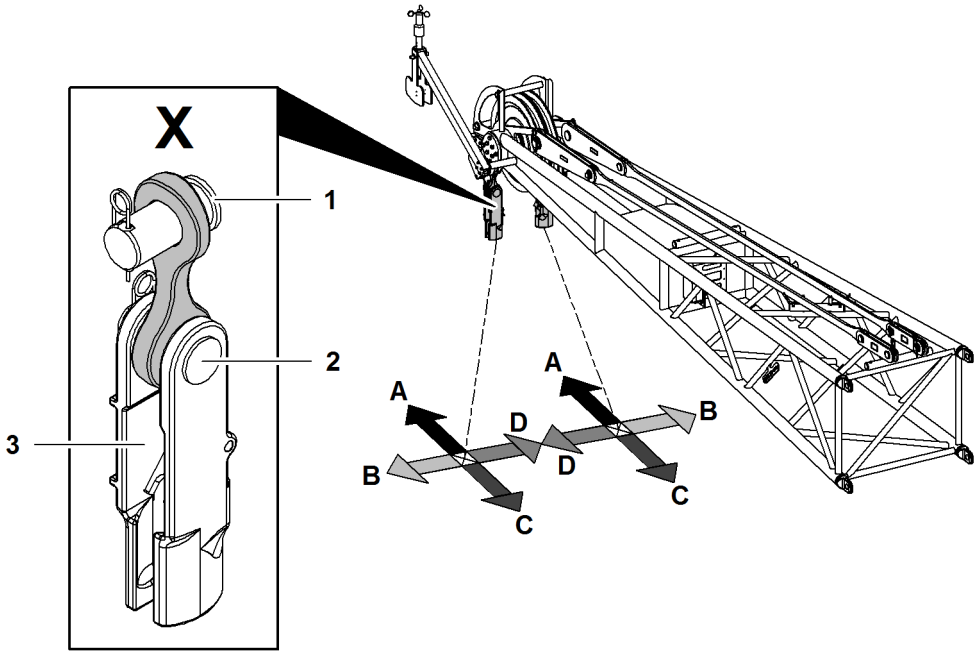

Fig. 4685: Determining the installation direction of the components of the rope fixing point of relevance for installation - fixed jib (illustration of principle)

X	Components needed for fitting	**A**	Direction main boom head
1	Shoulder of pin on the boom	**B**	Outside
2	Shoulder of pin on the pocket lock	**C**	Direction basic machine
3	Pocket lock opening	**D**	Inside

Installation direction of the rope fixing point components of relevance for installation			
	Pin collar on boom	**Pin collar on pocket lock**	**Pocket lock opening**
All rope fixing points	D	C	B
Exceptions:			
Fixed jib head 0906	B	C	B
Fixed jib head 1507	B	C	B

Tab. 531: Installation direction of the rope fixing point components of relevance for installation

WARNING
Incorrectly fit swivels!
Severe injuries, damage to machine.

- ▶ Fit rope with no twists.
- ▶ Install the rope without swivels.

LWN/LR.x/V03.01//Auslieferung/2015-06-03/en

copyright by
LIEBHERR

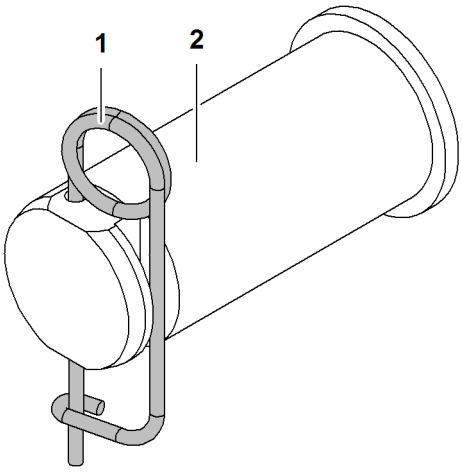

Fig. 4686: Securing the pins

1 Locking spring **2** Pin

DANGER
Pins **2** not completely secured!
Load breakaway.

▶ Ensure that locking spring **1** completely secures the pin **2**.

Installing the rope fixing point on the boom head

▶ Pin cross strap with boom head.

▶ Secure pin with locking spring.

▶ Pin pocket lock with cross strap.

▶ Secure pin with locking spring.

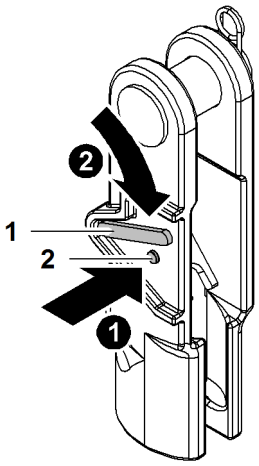

Fig. 4687: Unlocking the pocket lock

1 Safety latch **2** Locking button

▶ Press the locking button **2**.

▶ Press safety latch **1** down and hold.

LWN/LR.x/V03.01//Auslieferung/2015-06-03/en

copyright by LIEBHERR

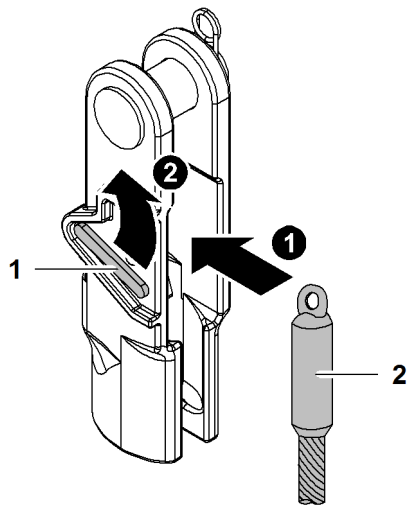

Fig. 4688: Inserting the end of rope into pocket lock and locking the pocket lock

1 Safety latch **2** End of rope

▶ Insert end of rope **2** in pocket lock.

DANGER
End of rope **2** not properly secured!
Load breakaway.

▶ Ensure that the safety latch **1** engages.

▶ Let go of safety latch **1**.
▷ Safety latch **1** engages.

Installing the rope fixing point on the hook or pulley block

▶ Pin pocket lock with hook or pulley block.

▶ Secure pin with locking spring.

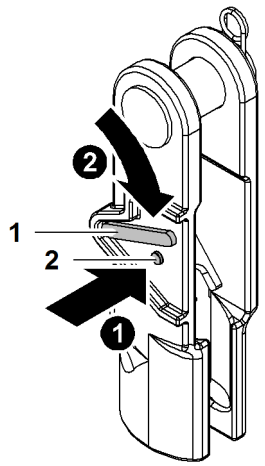

Fig. 4689: Unlocking the pocket lock

1 Safety latch **2** Locking button

▶ Press the locking button **2**.

LWN/LR.x/V03.01//Auslieferung/2015-06-03/en

copyright by
LIEBHERR

▶ Press safety latch **1** down and hold.

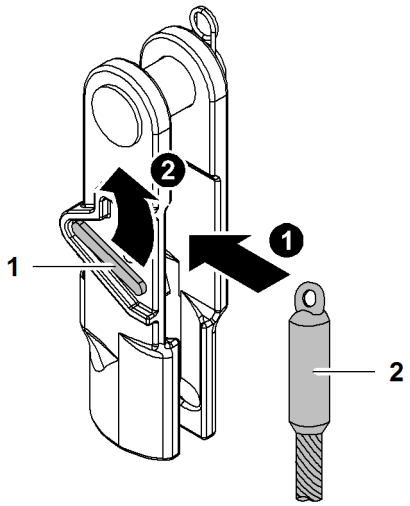

Fig. 4690: Inserting the end of rope into pocket lock and locking the pocket lock

1 Safety latch **2** End of rope

▶ Insert end of rope **2** in pocket lock.

DANGER
End of rope **2** not properly secured!
Load breakaway.

▶ Ensure that the safety latch **1** engages.

▶ Let go of safety latch **1**.
▷ Safety latch **1** engages.

7.19.20 Installing the hoist limit switch weight

NOTICE
Improper installation of the hoist limit switch weight!
Damage to the rope and hoist limit switch weight.

▶ Fit the hoist limit switch weight with no diagonal pull.

▶ Always install the hoist limit switch weight on the slack rope of winch1/winch2, except with simple reeving.

LWN/LR.x/V03.01//Auslieferung/2015-06-03/en

copyright by
LIEBHERR

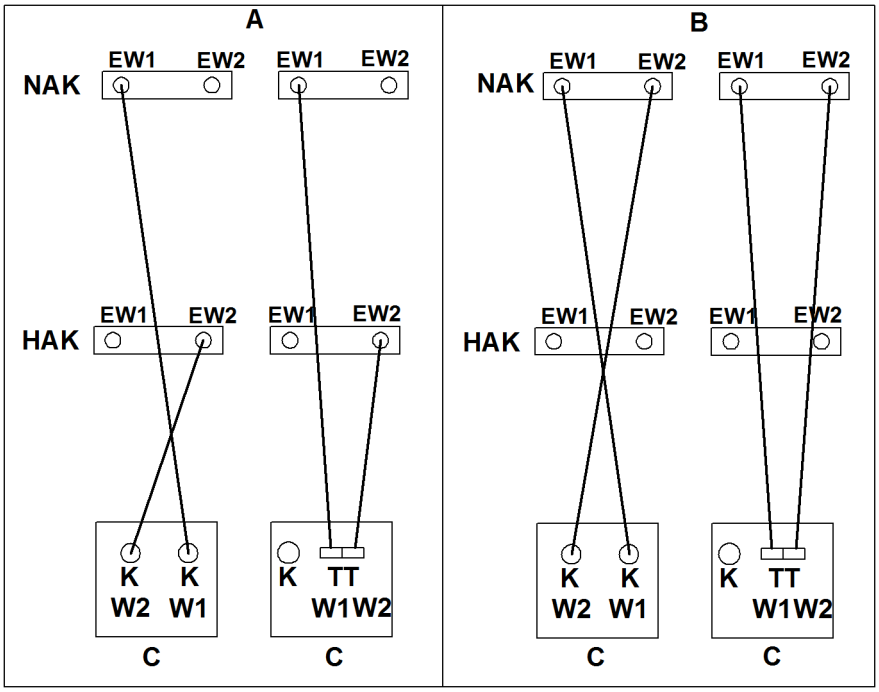

Fig. 4691: Hoist limit switch assignment in dependence on winch1/winch2

A	Boom configuration main boom + fixed jib	**K**	Joystick
B	Boom configuration main boom + fixed jib with 2 ropes over jib head section	**NAK**	Jib head section
C	Cabin	**TT**	Double T-control lever
EW1	Hoist limit switch winch1	**W1**	winch1
EW2	Hoist limit switch winch2	**W2**	winch2
HAK	Main boom head section		

NOTICE
Wrong hoist limit switch!
Hoist limit switch does not turn off.

▶ Make sure that the correct hoist limit switch for the correct rope of winch1/winch2 is used.

The hoist limit switch with chain and hoist limit switch weight attached is secured to the inoperative end of the hoist rope.

LWN/LR.x/V03.01//Auslieferung/2015-06-03/en

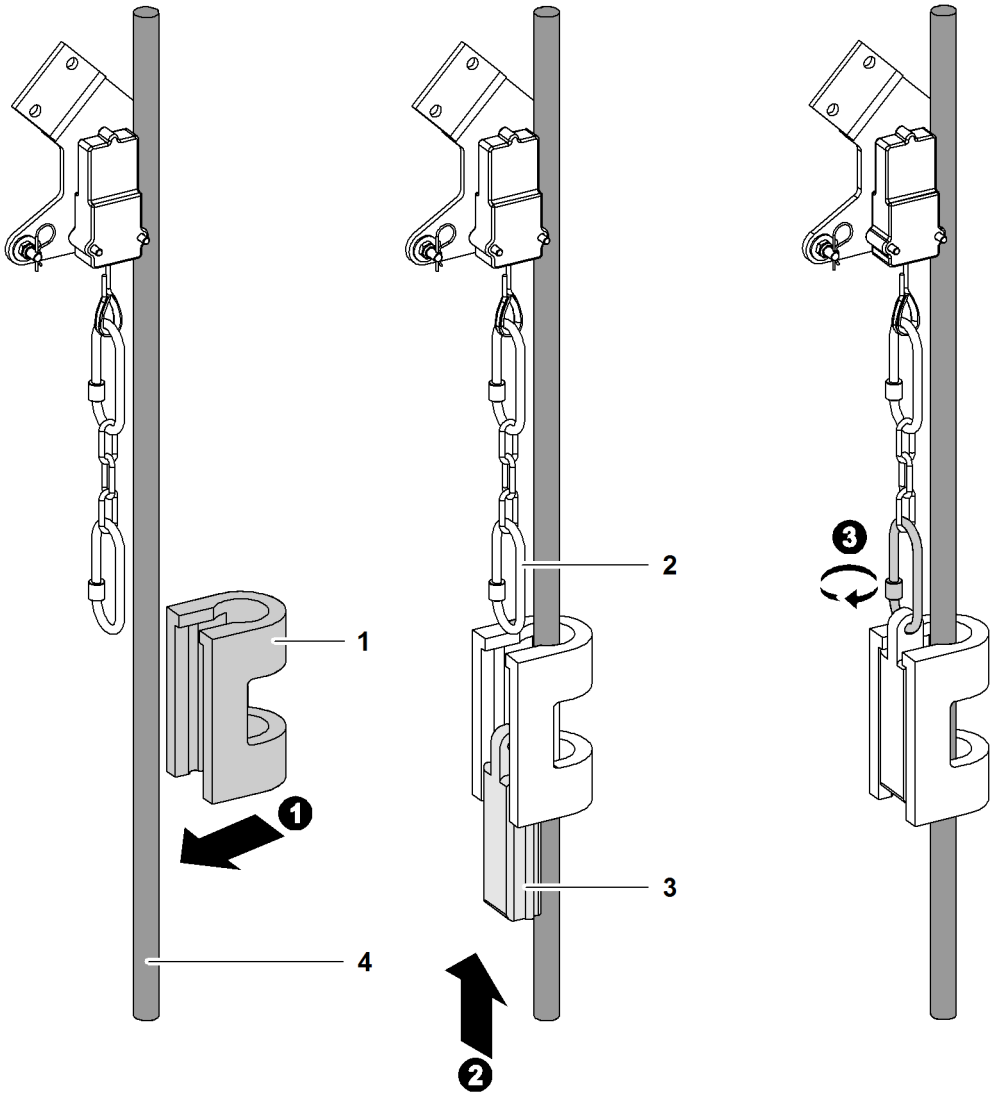

Fig. 4692: Fitting the hoist limit switch weight

1	Hoist limit switch weight (U shape)	**3**	Hoist limit switch weight (wedge)
2	Carabiner	**4**	Rope of winch1/winch2

▶ Guide the hoist limit switch weight (U shape) **1** over the rope of winch1/winch2 **4**.

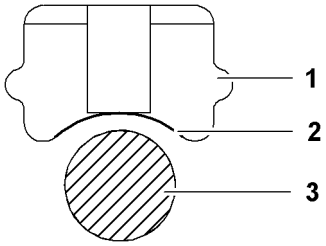

Fig. 4693: Hoist limit switch weight (wedge) view from above

1	Hoist limit switch weight (wedge)	**3**	Rope of winch1/winch2
2	Curvature		

The hoist limit switch weight (wedge) **1** has a curvature **2** on one side.

LWN/LR.x/V03.01//Auslieferung/2015-06-03/en

copyright by
LIEBHERR

NOTICE
Wrongly installed hoist limit switch weight (wedge)!
Hoist limit switch weight (wedge) damaged with wrong installation of rope of winch1/winch2.

- ▶ Make sure that the curvature of the hoist limit switch weight (wedge) is installed in the direction of the rope of winch1/winch2.

- ▶ Insert the hoist limit switch weight (wedge) **1** from below into the hoist limit switch weight (U shape).
- ▶ Attach the carabiner to the hoist limit switch weight (wedge) **1**.

Note
Liebherr recommends:

- ▶ visual inspection of the carabiner hook prior to installation.
- ▶ Clean dirty carabiner hook with a clean cloth and water.
- ▶ If necessary, re-clean with a slightly oily cloth.

NOTICE
Improper installation of carabiner!
Damage to machine.

- ▶ Make sure that the screw of the carabiner points downwards.
- ▶ Make sure that the securing element is twisted shut.

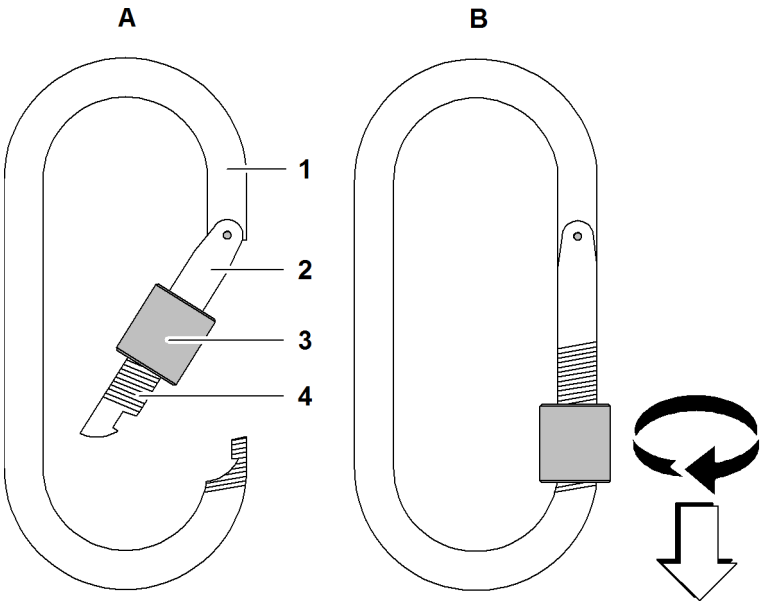

Fig. 4694: Carabiner

1	Carabiner	**4**	Thread
2	Snapper	**A**	Opened carabiner
3	Securing element	**B**	Closed carabiner

- ▶ Secure carabiner **1** with securing element **3**.

LWN/LR.x/V03.01//Auslieferung/2015-06-03/en

NOTICE
The chain on the hoist limit switch weight is too short!
The hoist limit switch weight responds too late. The hook damages the boom head.

▶ Ensure that hoist limit switch weight chain is at least 3 m (9‘ 10“ ft-in) and at most 4.5 m (14‘ 9“ ft-in) long.

▶ Attach the chain between the hoist limit switch weight and the hoist limit switch.

7.19.21 Bypass unused hoist limit switches.

DANGER
The hoist limit switch has been bypassed illegally!
Load breakaway.

▶ Only ever bypass unused hoist limit switches.

NOTICE
Wrong hoist limit switch is bypassed!
The hook damages the boom head.

▶ Lock winch 1 using the left hoist limit switch.

▶ Lock winch 2 using the right hoist limit switch.

Ensure that the following conditions are fulfilled:
❑ Only motion is performed with a rope of winch1/winch2. A hoist limit switch is not required.

LWN/LR.x/V03.01//Auslieferung/2015-06-03/en

copyright by
LIEBHERR

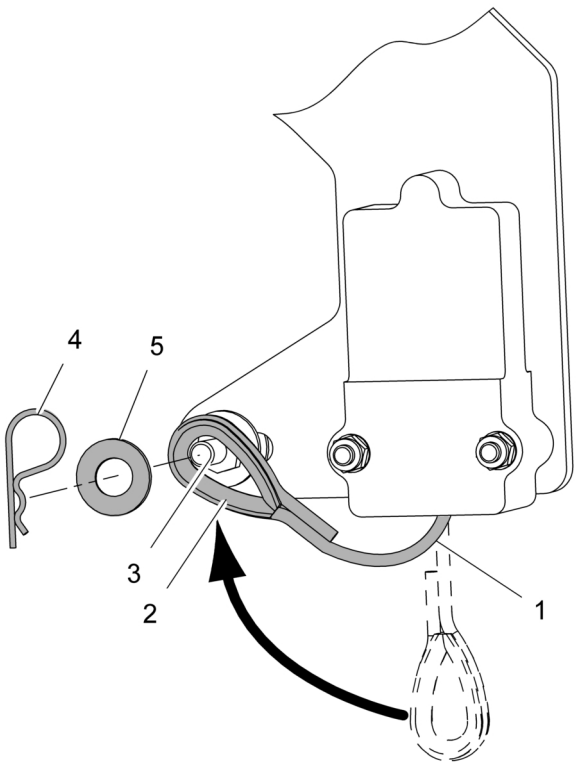

Fig. 4695: Bypassing the hoist limit switch mechanically

1	Steel rope	**4**	Safety pin
2	Loop	**5**	Washer
3	Stud bolt		

▶ Pull the steel rope **1** and place the loop **2**over the stud bolt **3**.
▷ Hoist limit switch is bypassed.

▶ Protect the sling **2** from slipping off the stud bolt **3** by securing it with a washer **5** and a safety pin **4**.

7.19.22 Erecting a main boom + fixed jib

Ensure that the following conditions are fulfilled:
❑ Boom configuration can be erected with counterweight.
❑ Signalmen and assistants are instructed.
❑ All work on the boom has been completed.
❑ No loose parts or tools have been left on the boom.

Note
The overall center of gravity of the machine is moved beyond the first running roller!
Sudden swinging of the boom/jib when erecting.

Liebherr recommends:
▶ When using long main booms and short jibs, follow the procedure for “Blocked Crawlers” (For more information see: 4.27 Blocked crawlers*, page 964) .

LWN/LR.x/V03.01//Auslieferung/2015-06-03/en

copyright by
LIEBHERR

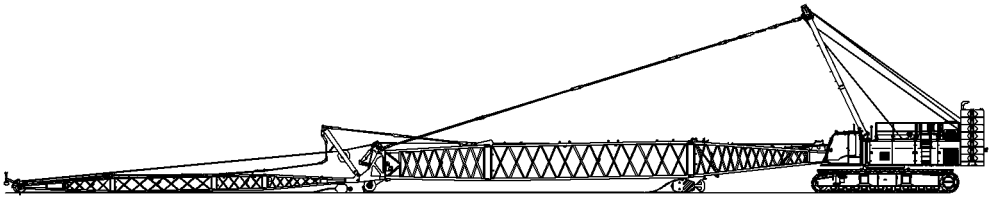

Fig. 4696: Main boom with fixed jib on the ground (illustration of principle)

DANGER
Hoist limit switch bypassed on control panel *X23* in crane mode!
Load breakaway.

- ▶ Only bypass hoist limit switch on control panel *X23* when assembling or disassembling the machine.

If hoist limit switch weight is on the ground:

- ▶ Press the *Bypass limit switch* button on control panel *X23*.
  - ▷ Hoist limit switches are bypassed.

- ▶ Press the *Load moment limiter assembly/self-lock* button on control panel *X23*.

No load chart exist for machines geometry:

- ▷ Function “load moment limiter assembly” is active.
- ▷ The LED on the button *Load moment limiter assembly/self-lock* lights up.
- ▷ Machine functions are enabled unlimited.
- ▷ Load Moment Limiter lamps flash orange.

DANGER
Erectability chart is not followed!
Machine toppling over.

- ▶ Only raise the boom when erection is permitted according to the erectability chart.

WARNING
Falling objects!
Severe injury.

- ▶ Any loose parts and tools must be removed from the boom.
- ▶ Make sure that no-one is standing in the danger area.
- ▶ Leave the danger area.

- ▶ Lift main boom slowly.
  - ▷ The main boom pendant straps are tensioned:

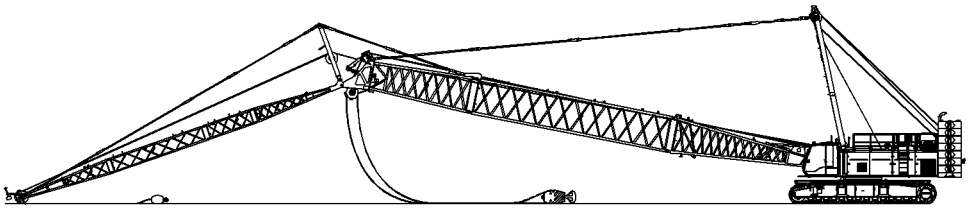

Fig. 4699: Main boom pendant straps tensioned (illustration of principle)

LWN/LR.x/V03.01//Auslieferung/2015-06-03/en

copyright by
LIEBHERR

WARNING
Dangerous voltage in boom!
Sudden sideway movement when lifting boom from ground.

- ▶ Make sure that no-one is standing in the danger area.
- ▶ Leave the danger area.

- ▶ Lift main boom further.
  - ▷ The main boom lifts off the ground.
  - ▷ Jib head section remains on the ground and moves backwards on the pulleys.

  As soon as there is a load chart for machines geometry:
  - ▷ Deactivate function *load moment limiter assembly*.
  - ▷ The LED in the button *Load moment limiter assembly/self-lock* goes out.
  - ▷ Load moment limiter is active.
  - ▷ Load moment limiter lamps light up according to the current status of the Load Moment Limiter system.

NOTICE
Incorrect erection procedure is followed!
Damage to the equipment.

- ▶ Do not drag the hook or the pulley block along the ground.
- ▶ Do not allow any slacking of the rope.

- ▶ Unwind the rope of winch1/winch2 when necessary.
  - ▷ The hook/pulley block remains on the ground.

When the maximum permitted lifting capacity is at least equal to the weight of the hook and/or pulley block:
- ▶ Raise the hook/pulley block.
- ▶ Erect the main boom until it is in the desired position.
  - ▷ Main boom with fixed jib is erected:

LWN/LR.x/V03.01//Auslieferung/2015-06-03/en

copyright by
LIEBHERR

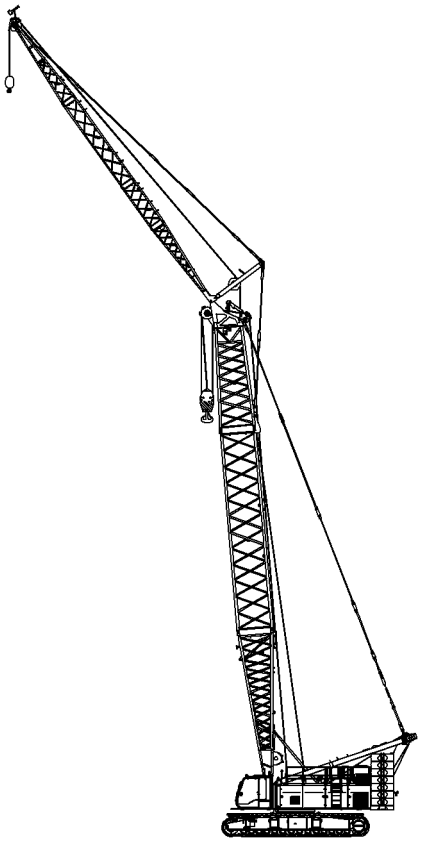

Fig. 4700: Erected main boom with fixed jib (illustration of principle)

7.19.23 Switching off assembly mode functions

Ensure that the following conditions are fulfilled:
- ❑ The machine is fully assembled and erected.
- ❑ All limit switches are fitted and operational.

▶ Press the *Assembly functions* switch on control panel *X12*.
- ▷ Assembly mode functions are switched off.
- ▷ The symbol *Assembly functions* disappears on screen.

LWN/LR.x/V03.01//Auslieferung/2015-06-03/en

copyright by LIEBHERR

7.19.24 Checking the main boom limit switch plate for proper adjustment

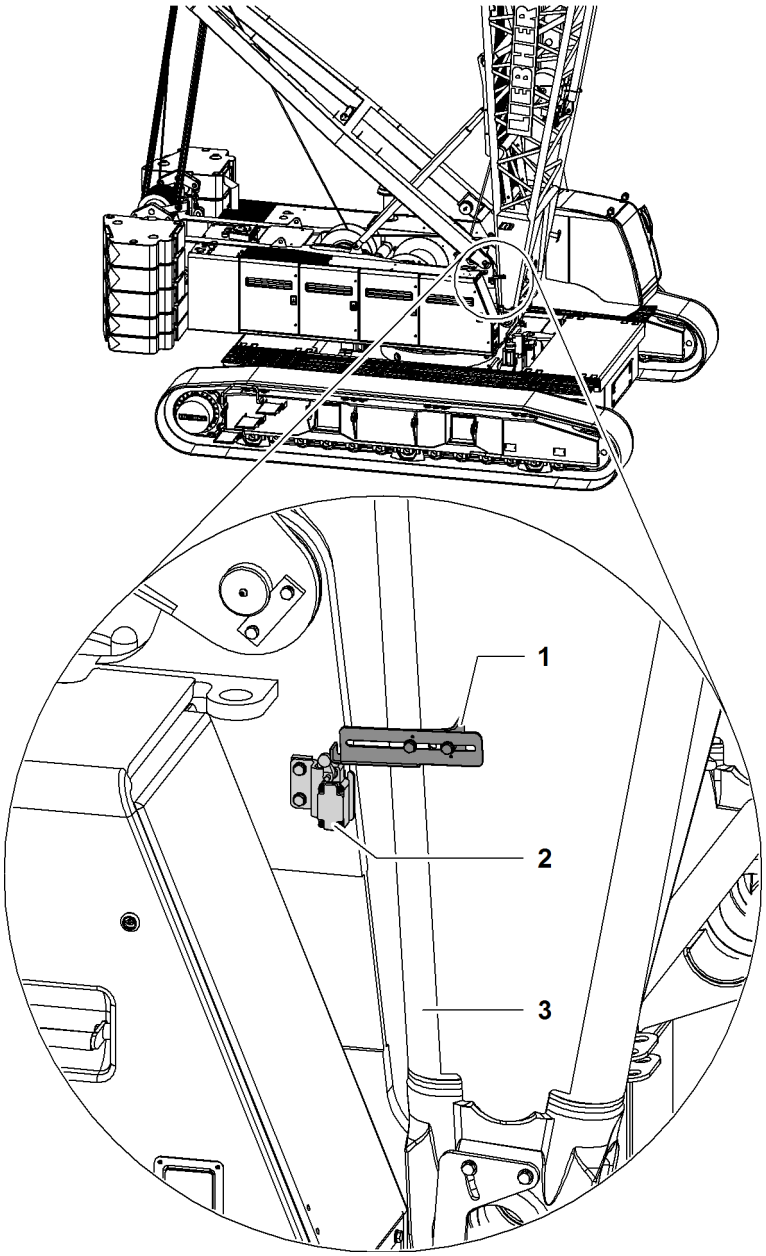

Fig. 4702: Checking the main boom limit switch plate for proper adjustment (illustration of principle)

1 Limit switch plate
2 Limit switch
3 Main boom base section

LWN/LR.x/V03.01//Auslieferung/2015-06-03/en

copyright by LIEBHERR

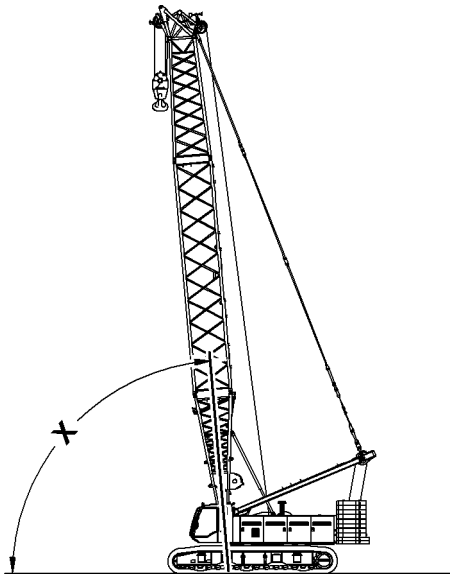

Fig. 4703: Top main boom angle (illustration of principle)

Boom configuration	Angle **X**
Main boom	86°
Main boom + derrick	
Main boom + reducing adapter	
Main boom + fixed jib	88°
Main boom + fixed jib + derrick	
Main boom + luffing jib	
Main boom + luffing jib + derrick	
Main boom + luffing jib + midfall	

Tab. 532: Main boom limit switch plate

NOTICE
Incorrect calibration of the main boom limit switch plate!
Damage to machine.

▶ Make sure that the main boom limit switch plate is properly adjusted.

▶ Erect the main boom until the screen *Operation* shows the angle **X**.
  ▷ Limit switch triggers.
  ▷ Lift main boom is locked.

If the limit switch triggers too early or not at all:
▶ Switch off machine.

▶ Contact Liebherr service department.

LWN/LR.x/V03.01//Auslieferung/2015-06-03/en

copyright by
LIEBHERR

7.20 Luffing jib 2316

System-relevant information for luffing jib 2316:
- Configuration of jib
  - Mid-point suspensions installation positions
- Lengths of jib mid-point suspensions
- Configuration of main boom
- Overview of steel pendant straps on luffing jib 2316
- Overview of CF pendant straps on luffing jib 2316
- Reeving diagram A-frame2/A-frame3
- Reeving diagrams for one rope across jib head 2316 (load position1)
- Reeving diagrams for two ropes across jib head 2316 (load position1)
- Reeving diagrams for one rope across main boom head 2821 (load position2)
- Reeving diagrams for one rope across auxiliary jib (30 t (66.000 lb)) on jib head 2316 (load position1)

7.20.1 Configuration of jib

DANGER
Excess length of jib!
Structural breakdown.

▶ Check jib length in load chart for validity.

Jib length	Configuration of jib (symbolic)
20 m 66 ft	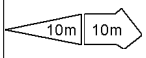
23 m 76 ft	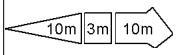
26 m 85 ft	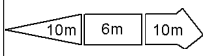
29 m 95 ft	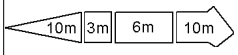
32 m 105 ft	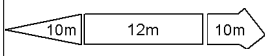
35 m 115 ft	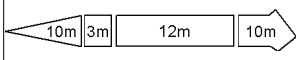
38 m 125 ft	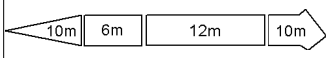
41 m 134 ft	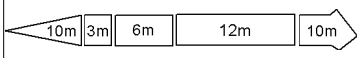
44 m 144 ft	
47 m 154 ft	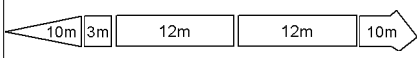
50 m 164 ft	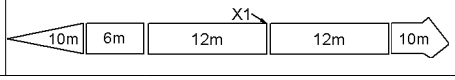

LWN/LR.x/V03.01//Auslieferung/2015-06-03/en

copyright by LIEBHERR

Jib length	Configuration of jib (symbolic)
53 m 174 ft	10m 3m 6m 12m (X1) 12m 10m
56 m 184 ft	10m 12m 12m (X1) 12m 10m
59 m 194 ft	10m 3m 12m 12m (X1) 12m 10m
62 m 203 ft	10m 6m 12m 12m (X1) 12m 10m
65 m 213 ft	10m 3m 6m (X1) 12m 12m (X2) 12m 10m
68 m 223 ft	10m 12m (X1) 12m 12m (X2) 12m 10m
71 m 233 ft	10m 3m 12m (X1) 12m 12m (X2) 12m 10m
74 m 243 ft	10m 6m 12m (X1) 12m 12m (X2) 12m 10m
77 m 253 ft	10m 3m 6m (X1) 12m 12m 12m (X2) 12m 10m
80 m 262 ft	10m 12m 12m (X1) 12m 12m (X2) 12m 10m
83 m 272 ft	10m 3m 12m 12m (X1) 12m 12m (X2) 12m 10m
86 m 282 ft	10m 6m 12m (X1) 12m 12m (X2) 12m 12m 10m
89 m 292 ft	10m 3m 6m 12m (X1) 12m 12m (X2) 12m 12m 10m
92 m 302 ft	10m 12m 12m (X1) 12m 12m (X2) 12m 12m 10m
95 m 312 ft	10m 3m 12m 12m (X1) 12m 12m (X2) 12m 12m 10m
98 m 322 ft	10m 6m 12m (X1) 12m 12m 12m (X2) 12m 12m 10m
101 m 331 ft	10m 3m 6m 12m (X1) 12m 12m 12m (X2) 12m 12m 10m
104 m 341 ft	10m 12m 12m (X1) 12m 12m (X2) 12m 12m 12m 10m
107 m 351 ft	10m 3m 12m 12m (X1) 12m 12m (X2) 12m 12m 12m 10m
110 m 361 ft	10m 6m 12m (X1) 12m 12m 12m (X2) 12m 12m 12m 10m
113 m 371 ft	10m 3m 6m 12m (X1) 12m 12m 12m (X2) 12m 12m 12m 10m

Tab. 533: Configuration of luffing jib 2316

LWN/LR.x/V03.01//Auslieferung/2015-06-03/en

copyright by
LIEBHERR

X1 - Installation position mid-point suspension 1

X2 - Installation position mid-point suspension 2

7.20.2 Lengths of jib mid-point suspensions

Main boom length	Backstay pendant 1 (X1)	Backstay pendant 2 (X2)
	Rope length	Rope length
50 m 164 ft	3 m 9‘ 10“ ft-in	
53 m 174 ft	3 m 9‘ 10“ ft-in	
56 m 184 ft	2.6 m 8‘ 6“ ft-in	
59 m 194 ft	2.6 m 8‘ 6“ ft-in	
62 m 203 ft	2.1 m 6‘ 11“ ft-in	
65 m 213 ft	5.6 m 18‘ 4“ ft-in = 3.0 m (9‘ 10“ ft-in) + 2.6 m (8‘ 6“ ft-in)	2.1 m 6‘ 11“ ft-in
68 m 223 ft	5.1 m 16‘ 9“ ft-in = 3.0 m (9‘ 10“ ft-in) + 2.1 m (6‘ 11“ ft-in)	1.6 m 5‘ 3“ ft-in
71 m 233 ft	5.1 m 16‘ 9“ ft-in = 3.0 m (9‘ 10“ ft-in) + 2.1 m (6‘ 11“ ft-in)	1.6 m 5‘ 3“ ft-in
74 m 243 ft	4.7 m 15‘ 5“ ft-in = 2.1 m (6‘ 11“ ft-in) + 2.6 m (8‘ 6“ ft-in)	1.6 m 5‘ 3“ ft-in
77 m 253 ft	5.6 m 18‘ 4“ ft-in = 3.0 m (9‘ 10“ ft-in) + 2.6 m (8‘ 6“ ft-in)	1.6 m 5‘ 3“ ft-in
80 m 262 ft	4.2 m 13‘ 9“ ft-in = 2.1 m (6‘ 11“ ft-in) + 2.1 m (6‘ 11“ ft-in)	1.6 m 5‘ 3“ ft-in
83 m 272 ft	4.2 m 13‘ 9“ ft-in = 2.1 m (6‘ 11“ ft-in) + 2.1 m (6‘ 11“ ft-in)	2.1 m 6‘ 11“ ft-in

LWN/LR.x/V03.01//Auslieferung/2015-06-03/en

copyright by
LIEBHERR

Main boom length	Backstay pendant 1 (X1)	Backstay pendant 2 (X2)
	Rope length	Rope length
86 m 282 ft	5.1 m 16‘ 9“ ft-in = 3.0 m (9‘ 10“ ft-in) + 2.1 m (6‘ 11“ ft-in)	2.1 m 6‘ 11“ ft-in
89 m 292 ft	4.7 m 15‘ 5“ ft-in = 2.1 m (6‘ 11“ ft-in) + 2.6 m (8‘ 6“ ft-in)	2.1 m 6‘ 11“ ft-in
92 m 302 ft	4.7 m 15‘ 5“ ft-in = 2.1 m (6‘ 11“ ft-in) + 2.6 m (8‘ 6“ ft-in)	2.1 m 6‘ 11“ ft-in
95 m 312 ft	4.2 m 13‘ 9“ ft-in = 2.1 m (6‘ 11“ ft-in) + 2.1 m (6‘ 11“ ft-in)	1.6 m 5‘ 3“ ft-in
98 m 322 ft	5.6 m 18‘ 4“ ft-in = 3.0 m (9‘ 10“ ft-in) + 2.6 m (8‘ 6“ ft-in)	2.1 m 6‘ 11“ ft-in
101 m 331 ft	5.1 m 16‘ 9“ ft-in = 3.0 m (9‘ 10“ ft-in) + 2.1 m (6‘ 11“ ft-in)	1.6 m 5‘ 3“ ft-in
104 m 341 ft	5.1 m 16‘ 9“ ft-in = 3.0 m (9‘ 10“ ft-in) + 2.1 m (6‘ 11“ ft-in)	2.6 m 8‘ 6“ ft-in
107 m 351 ft	4.7 m 15‘ 5“ ft-in = 2.1 m (6‘ 11“ ft-in) + 2.6 m (8‘ 6“ ft-in)	2.1 m 6‘ 11“ ft-in
110 m 361 ft	5.6 m 18‘ 4“ ft-in = 3.0 m (9‘ 10“ ft-in) + 2.6 m (8‘ 6“ ft-in)	2.6 m 8‘ 6“ ft-in
113 m 371 ft	5.1 m 16‘ 9“ ft-in = 3.0 m (9‘ 10“ ft-in) + 2.1 m (6‘ 11“ ft-in)	2.1 m 6‘ 11“ ft-in

Tab. 534: Lengths of jib mid-point suspensions - 2316 luffing jib

LWN/LR.x/V03.01//Auslieferung/2015-06-03/en

copyright by
LIEBHERR

7.20.3 Configuration of main boom

DANGER
Excess length of main boom!
Structural breakdown.

▶ Check main boom length in load chart for validity.

Note

▶ See system-relevant data of main boom for information on main boom configuration (For more information see: 7.5.1 Configuration of main boom, page 1230) .

7.20.4 Overview of steel pendant straps on luffing jib 2316

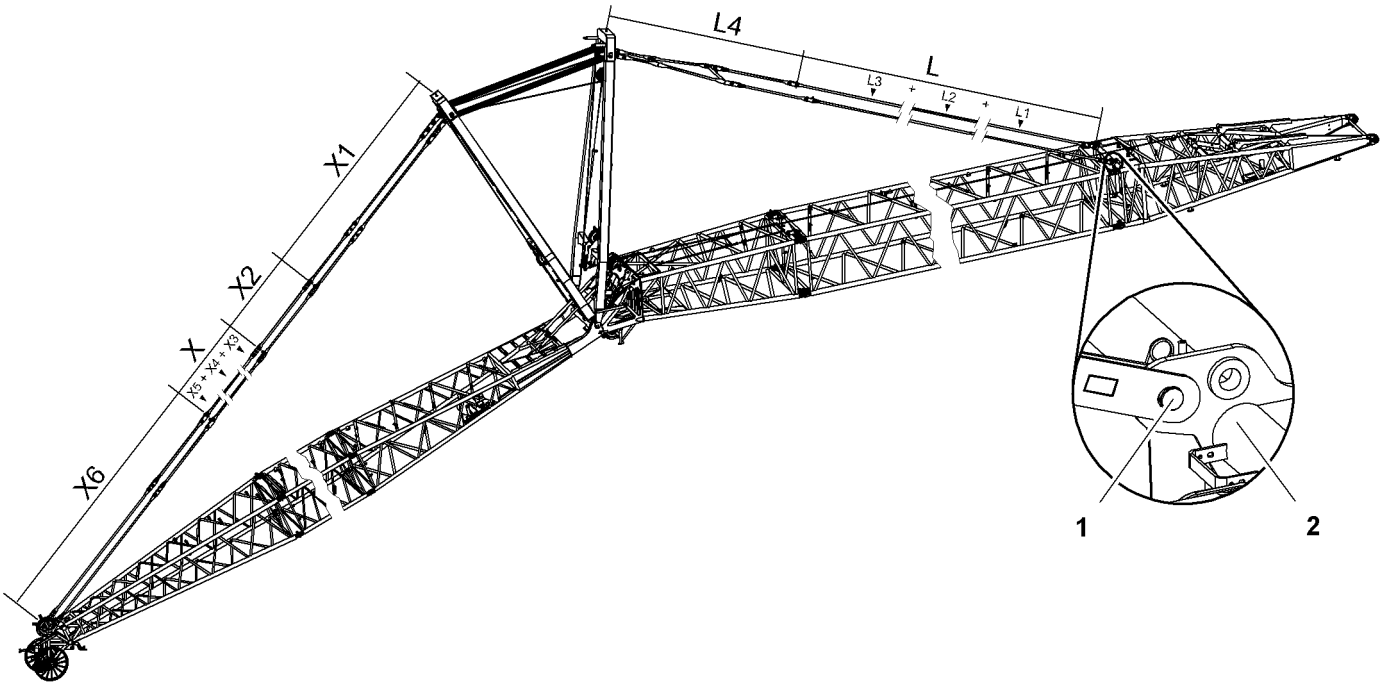

Fig. 4912: Overview of steel pendant straps on luffing jib 2316

1 Pin connection point for jib backstay straps

2 Main boom base section

LWN/LR.x/V03.01//Auslieferung/2015-06-03/en

copyright by LIEBHERR

Jib backstay straps A-frame2 to main boom base section 2821

Name			Value
L	**Jib backstay straps** consisting of:		Total **L1** + Total **L2** + Total **L3**
	L1	**Jib backstay strap 3 m (10 ft)** (For more information see: Jib backstay strap 3 m (10 ft), page 191)	
	L2	**Jib backstay strap 6 m (20 ft)** (For more information see: Jib backstay strap 6 m (20 ft), page 193)	
	L3	**Jib backstay strap 12 m (40 ft)** (For more information see: Jib backstay strap 12 m (40 ft), page 195)	
L4	**A-frame2 equalizer (jib backstay strap)** (For more information see: Equalizer A-frame2 (jib backstay strap), page 305)		8050 mm 26‘ 5“ ft-in

Tab. 535: Jib backstay straps A-frame2 to main boom base section 2821

Configuration of jib backstay straps (L):

Required number of jib backstay straps 3 m (10 ft) (**L1**) corresponds to number of main boom sections 3 m (10 ft).

Required number of jib backstay straps 6 m (20 ft) (**L2**) corresponds to number of main boom sections 6 m (20 ft).

Required number of jib backstay straps 12 m (40 ft) (**L3**) corresponds to number of main boom sections 12 m (40 ft).

Note

▶ For the admissible number of main boom sections 3 m (10 ft), 6 m (20 ft), 12 m (40 ft), refer to the load chart.

Pendant straps A-frame3 to jib head 2316

Name			Value
X1	**A-frame3 equalizer (jib pendant strap)** (For more information see: A-frame3 equalizer (jib pendant strap), page 306)		7850 mm 25‘ 9“ ft-in
X2	**Jib pendant strap** (For more information see: Jib pendant strap 3 m (10 ft), page 304)		3000 mm 9‘ 10“ ft-in
X	**Jib pendant straps** consisting of:		Total **X3** + Total **X4** + Total **X5**
	X3	**Jib pendant strap 3 m (10 ft)** (For more information see: Jib pendant strap 3 m (10 ft), page 308)	
	X4	**Jib pendant strap 6 m (20 ft)** (For more information see: Jib pendant strap 6 m (20 ft), page 308)	
	X5	**Jib pendant strap 12 m (40 ft)** (For more information see: Jib pendant strap 12 m (40 ft), page 309)	

LWN/LR.x/V03.01//Auslieferung/2015-06-03/en

copyright by LIEBHERR

Name		Value
X6	**Jib pendant strap on jib head 2316** (For more information see: Jib pendant strap on jib head 2316.20, page 310)	9180 mm 30‘ 1“ ft-in

Tab. 536: Pendant straps A-frame3 to jib head 2316

Configuration of jib pendant straps (X):

Required number of jib pendant straps 3 m (10 ft) (**X3**) corresponds to number of jib sections 3 m (10 ft).

Required number of jib pendant straps 6 m (20 ft) (**X4**) corresponds to number of jib sections 6 m (20 ft).

Required number of jib pendant straps 12 m (40 ft) (**X5**) corresponds to number of jib sections 12 m (40 ft).

Note

▶ For the admissible number of jib sections 3 m (10 ft), 6 m (20 ft), 12 m (40 ft), refer to the following table: (For more information see: 7.20.1 Configuration of jib, page 1570)

7.20.5 Overview of CF pendant straps on luffing jib 2316

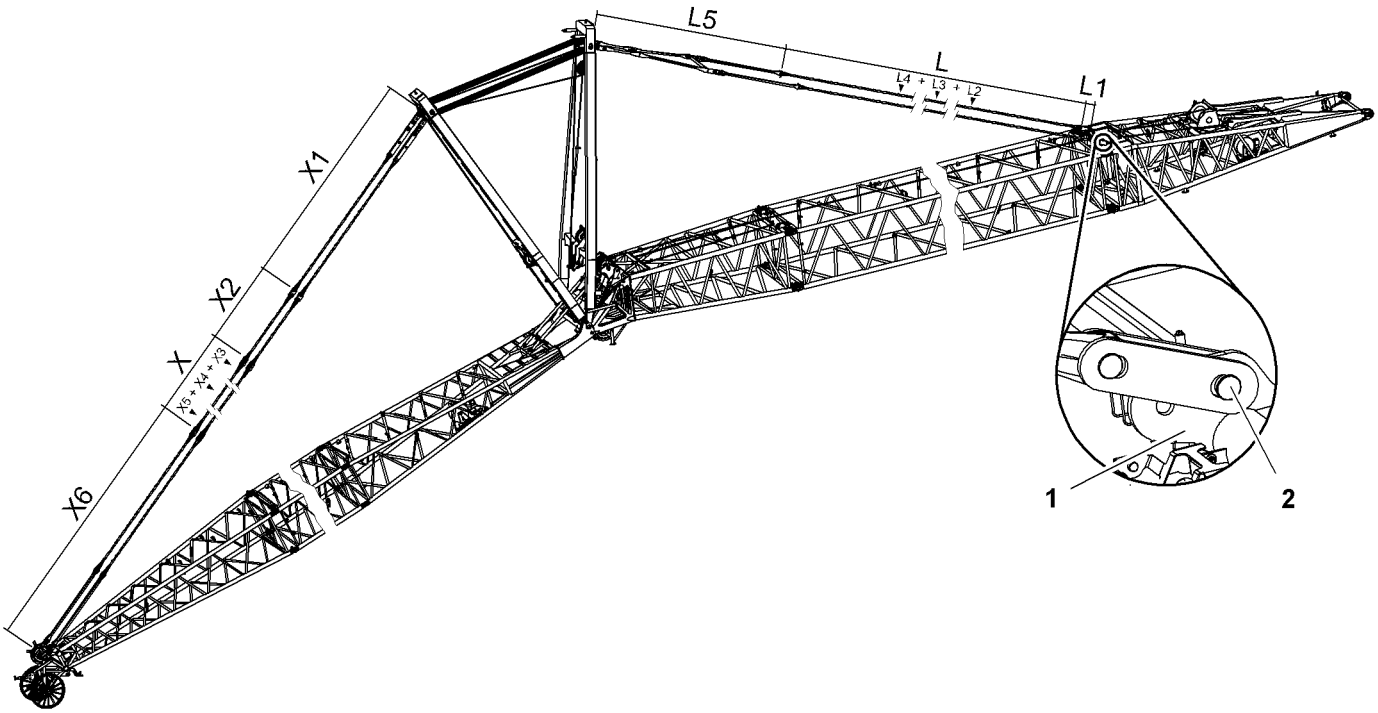

Fig. 4913: Overview of CF pendant straps on luffing jib 2316

1 Main boom base section

2 Pin connection point for jib backstay straps

LWN/LR.x/V03.01//Auslieferung/2015-06-03/en

Jib backstay straps A-frame2 to main boom base section 2821

Name			Value
L1	**Connecting link** (For more information see: Connecting link, page 200)		350 mm 1‘ 2“ ft-in
L	**Jib backstay straps** consisting of:		Total **L2** + Total **L3** + Total **L4**
	L2	**Jib backstay strap 3 m (10 ft)** (For more information see: Jib backstay strap 3 m (10 ft), page 202)	
	L3	**Jib backstay strap 6 m (20 ft)** (For more information see: Jib backstay strap 6 m (20 ft), page 206)	
	L4	**Jib backstay strap 12 m (40 ft)** (For more information see: Jib backstay strap 12 m (40 ft), page 210)	
L5	**A-frame2 equalizer (jib backstay strap)** (For more information see: Equalizer A-frame2 (jib backstay strap), page 313)		8050 mm 26‘ 5“ ft-in

Tab. 537: Jib backstay straps A-frame2 to main boom base section 2821

Configuration of jib backstay straps (L):

Required number of jib backstay straps 3 m (10 ft) (**L2**) corresponds to number of main boom sections 3 m (10 ft).

Required number of jib backstay straps 6 m (20 ft) (**L3**) corresponds to number of main boom sections 6 m (20 ft).

Required number of jib backstay straps 12 m (40 ft) (**L4**) corresponds to number of main boom sections 12 m (40 ft).

Note

▶ For the admissible number of main boom sections 3 m (10 ft), 6 m (20 ft), 12 m (40 ft), refer to the load chart.

The jib backstay straps **(L)** may consist of generation A and generation B jib backstay straps (For more information see: 1.11.9 CF pendant straps on main boom 2821, page 198) . Mixing is only admissible if the number of generation B jib backstay straps only differs by at most 1 in the left and the right strand of the jib backstay straps.

DANGER
Inadmissible mixing of generation A and generation B jib backstay straps!
Structural failure.

▶ Ensure that the number of generation B jib backstay straps differs by at most 1 in the left and the right strand of the jib backstay straps.

LWN/LR.x/V03.01//Auslieferung/2015-06-03/en

copyright by
LIEBHERR

Pendant straps A-frame3 to jib head 2316

Name			Value
X1	**A-frame3 equalizer (jib pendant strap)** (For more information see: A-frame3 equalizer (jib pendant strap), page 315)		7850 mm 25‘ 9“ ft-in
X2	**Jib pendant strap** (For more information see: Jib pendant strap 3 m (10 ft), page 312)		3000 mm 9‘ 10“ ft-in
X	**Jib pendant straps** consisting of:		Total **X3** + Total **X4** + Total **X5**
	X3	**Jib pendant straps 3 m (10 ft)** (For more information see: Jib pendant strap 3 m (10 ft), page 317)	
	X4	**Jib pendant straps 6 m (20 ft)** (For more information see: Jib pendant strap 6 m (20 ft), page 319)	
	X5	**Jib pendant straps 12 m (40 ft)** (For more information see: Jib pendant strap 12 m (40 ft), page 320)	
X6	**Jib pendant strap on jib head 2316** (For more information see: Jib pendant strap on jib head 2316.20, page 322)		9540 mm 31‘ 4“ ft-in

Tab. 538: Pendant straps A-frame3 to jib head 2316

Configuration of jib pendant straps (X):

Required number of jib pendant straps 3 m (10 ft) (**X3**) corresponds to number of jib sections 3 m (10 ft).

Required number of jib pendant straps 6 m (20 ft) (**X4**) corresponds to number of jib sections 6 m (20 ft).

Required number of jib pendant straps 12 m (40 ft) (**X5**) corresponds to number of jib sections 12 m (40 ft).

Note

▶ For the admissible number of jib sections 3 m (10 ft), 6 m (20 ft), 12 m (40 ft), refer to the following table: (For more information see: 7.20.1 Configuration of jib, page 1570)

The jib pendant straps **(X)** may consist of generation A and generation B jib pendant straps (For more information see: 1.20.8 CF pendant straps on luffing jib 2316, page 312) . Mixing is only admissible if the number of generation B jib pendant straps only differs by at most 1 in the left and the right strand of the jib pendant straps.

DANGER
Inadmissible mixing of generation A and generation B jib pendant straps!
Structural failure.

▶ Ensure that the number of generation B jib pendant straps differs by at most 1 in the left and the right strand of the jib pendant straps.

LWN/LR.x/V03.01//Auslieferung/2015-06-03/en

copyright by
LIEBHERR

7.20.6 Reeving diagram A-frame2/A-frame3

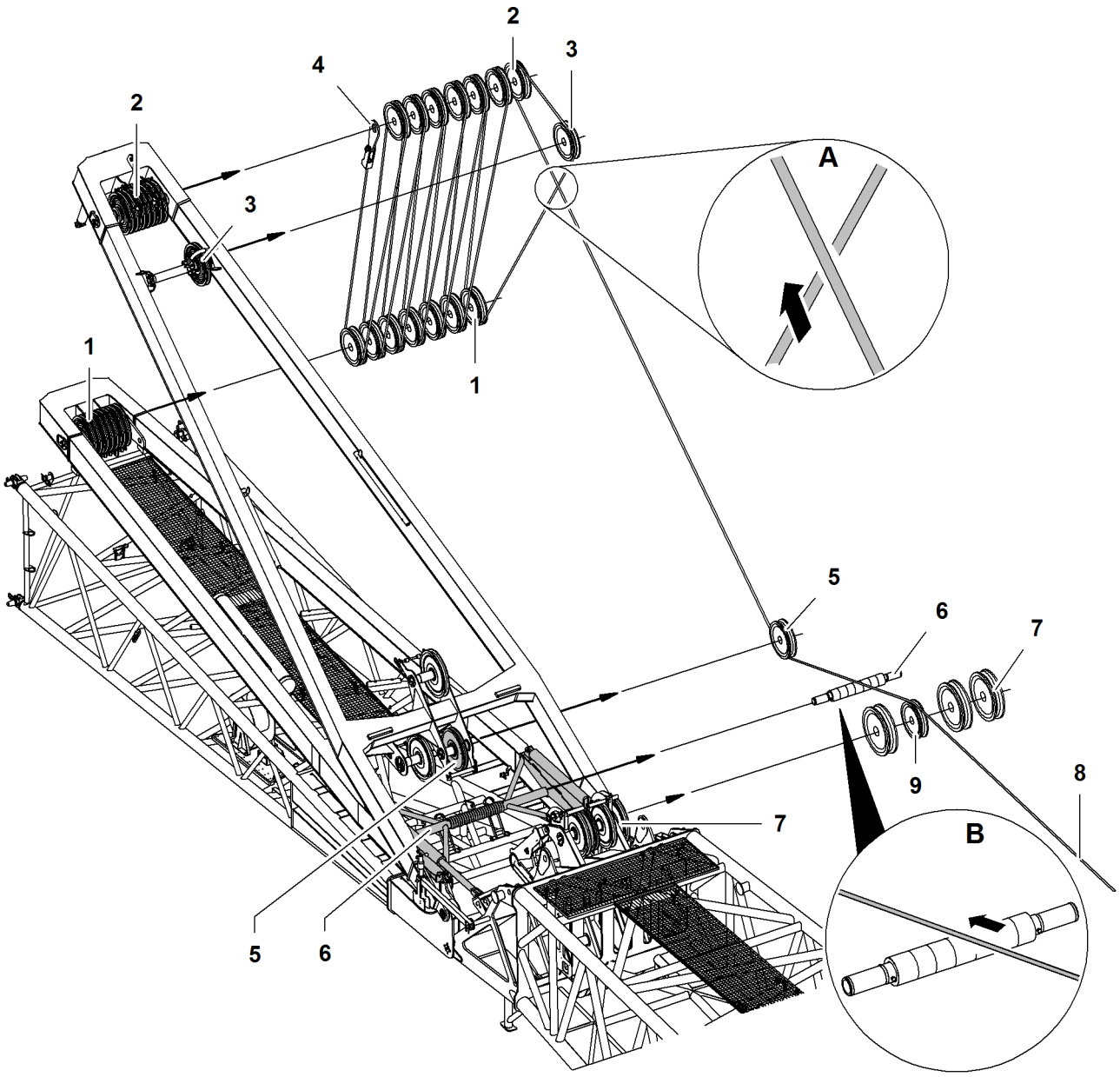

Fig. 4914: Reeving diagram A-frame2/A-frame3 - luffing jib 2316

1	Pulley set A-frame3	**4**	Rope fixing point	**7**	Gantry pulley main boom head (3x)
2	Pulley set A-frame2	**5**	Rope pulley in A-frame2	**8**	Rope of jib luffing winch
3	Pulley A-frame2	**6**	Rope protection roller support	**9**	Pulley of jib luffing winch

Detail A:

The rope of the jib luffing winch **8** between pulley **3** and pulley set **1** runs behind the rope of the rope pulley **5** in A-frame2.

Detail B:

The rope of the jib luffing winch **8** runs over the rope protection roller **6**.

LWN/LR.x/V03.01//Auslieferung/2015-06-03/en

copyright by
LIEBHERR

7.20.7 Reeving diagrams for one rope across jib head 2316 (load position1)

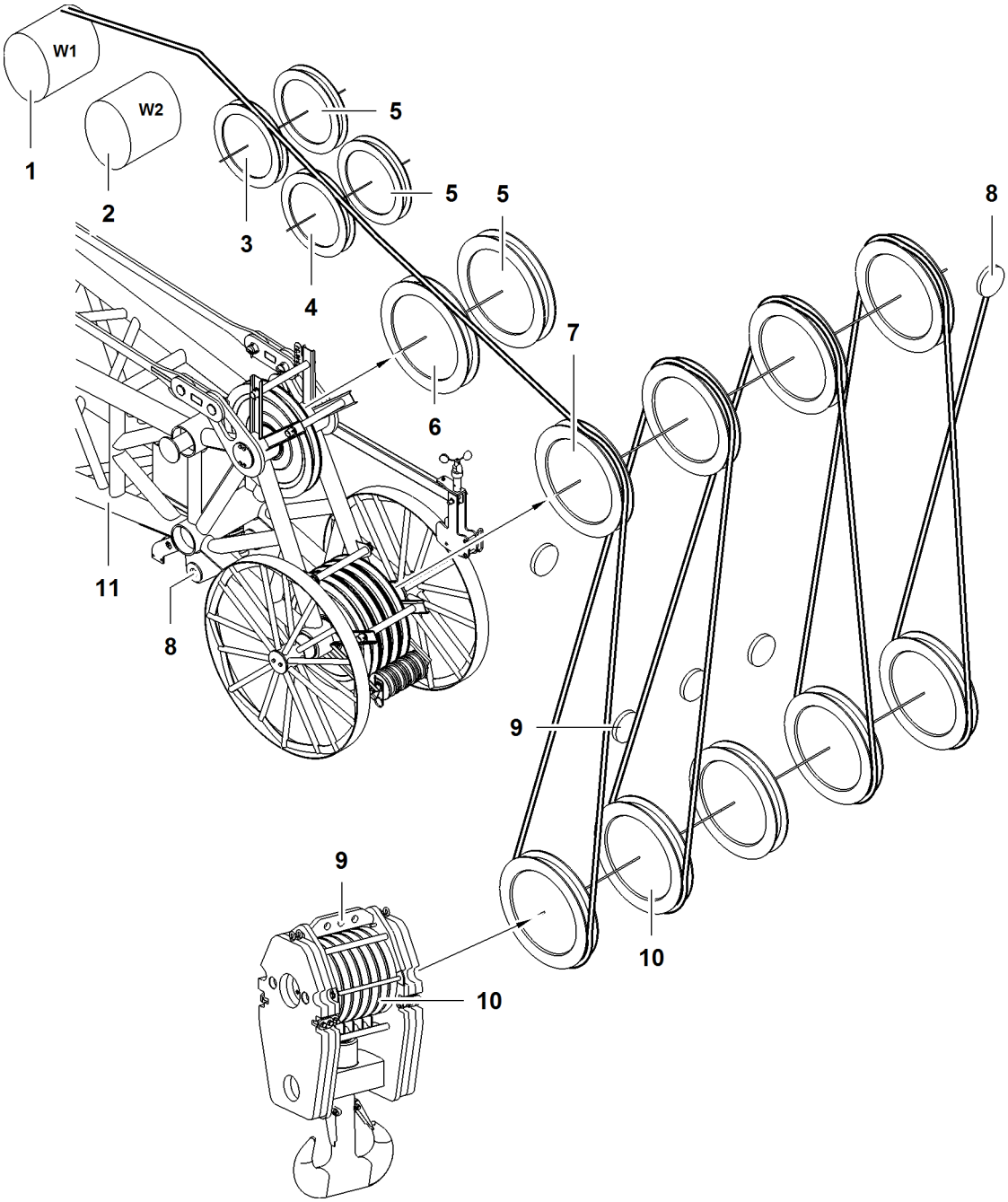

Fig. 4915: Reeving diagrams for one rope across jib head 2316 (load position1)

1	Winch1	**5**	Retrofit kit* for operation with two ropes across jib head	**9**	Rope fixing points of pulley block
2	Winch2	**6**	Gantry pulley of jib head	**10**	Pulley set of pulley block
3	Pulley of A-frame2	**7**	Pulley (4x) of jib head	**11**	Jib head
4	Pulley of A-frame3	**8**	Rope fixing point of jib head		

LWN/LR.x/V03.01/Auslieferung/2015-06-03/en

copyright by LIEBHERR

DANGER
Inadmissible number of reevings!
Structural breakdown, toppling of machine.

▶ Choose correct number of reevings as indicated in load chart.

Reeving diagrams for one rope across jib head 2316 (load position1)	
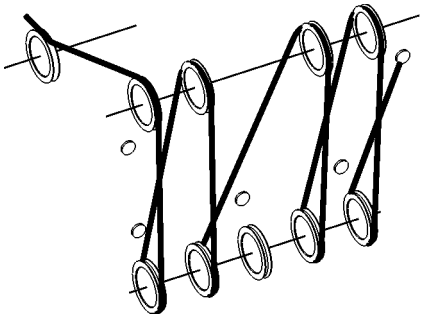 8x	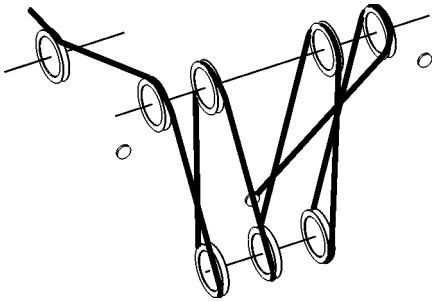 7x
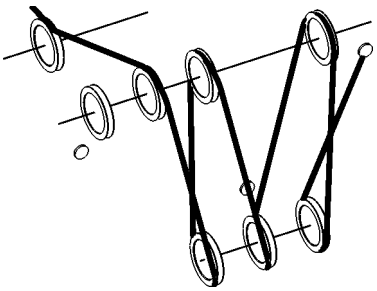 6x	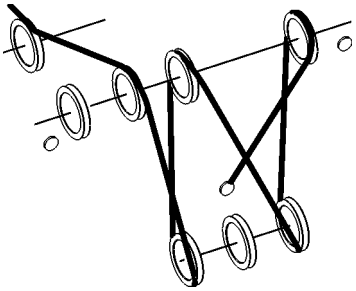 5x
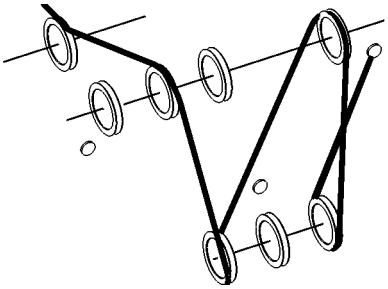 4x	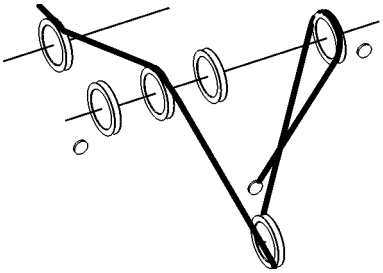 3x
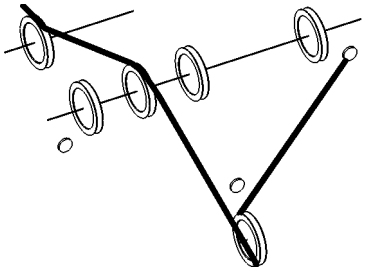 2x	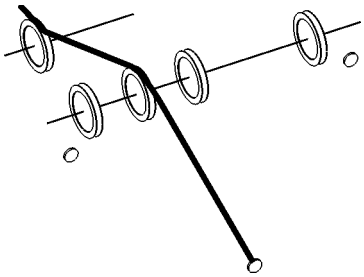 1x

Tab. 539: Reeving diagrams for one rope across jib head 2316 (load position1)

LWN/LR.x/V03.01//Auslieferung/2015-06-03/en

copyright by
LIEBHERR

7.20.8 Reeving diagrams for two ropes across jib head 2316, 1916, 1713, 1309, 1008 (load position1)

DANGER
Inadmissible number of reevings!
Structural breakdown, toppling of machine.

▶ Choose correct number of reevings as indicated in load chart.

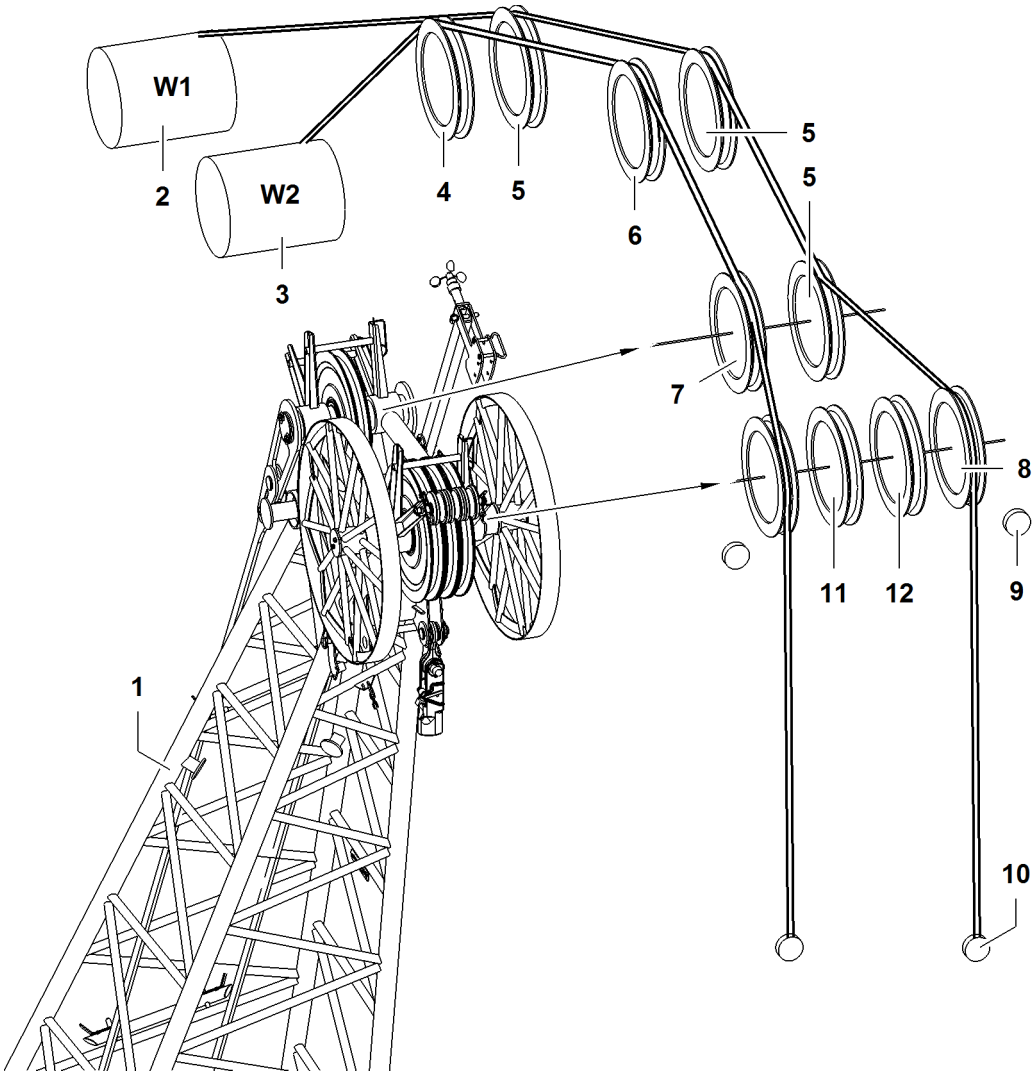

Fig. 4924: Reeving diagrams for two ropes across jib head 2316, 1916, 1713, 1309, 1008 (load position1)

1	Jib head	**5**	Retrofit kit* for operation with two ropes across jib head	**9**	Rope fixing point (2x) of jib head
2	Winch1	**6**	Pulley of A-frame3	**10**	Rope fixing points of pulley block
3	Winch2	**7**	Gantry pulleys of jib head	**11**	Pulley (only with jib head 2316)
4	Pulley of A-frame2	**8**	Pulleys of jib head	**12**	Pulley (only with jib head 2316, 1916, 1713)

LWN/LR.x/V03.01/Auslieferung/2015-06-03/en

copyright by LIEBHERR

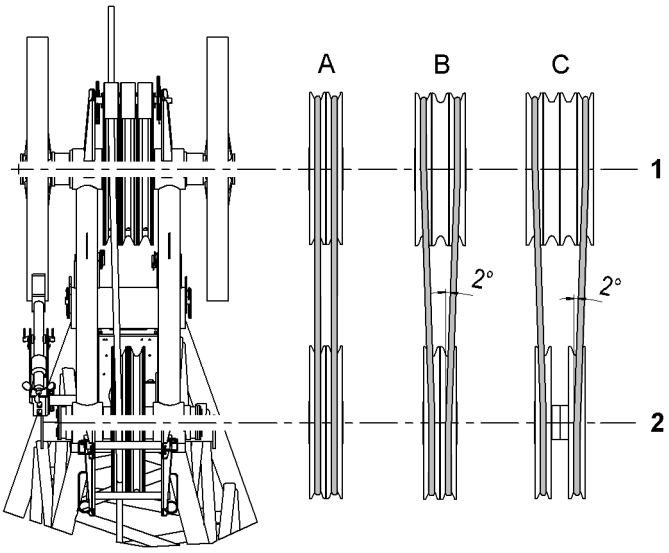

Fig. 4925: Run of the rope when two ropes pass over the jib head section

1 Pulleys of jib head **2** Gantry pulleys of jib head

Run of the rope	Type of jib
A	Luffing jib 1008 Luffing jib 1309
B	Luffing jib 1713 Luffing jib 1916
C	Luffing jib 2316

Tab. 540: Run of the rope when two ropes pass over the jib head

7.20.9 Reeving diagrams for one rope across main boom head 2821 (load position2)

If the main boom with jib attached is also used to lift a load, reeve main boom head 2821 as shown below.

LWN/LR.x/V03.01//Auslieferung/2015-06-03/en

copyright by
LIEBHERR

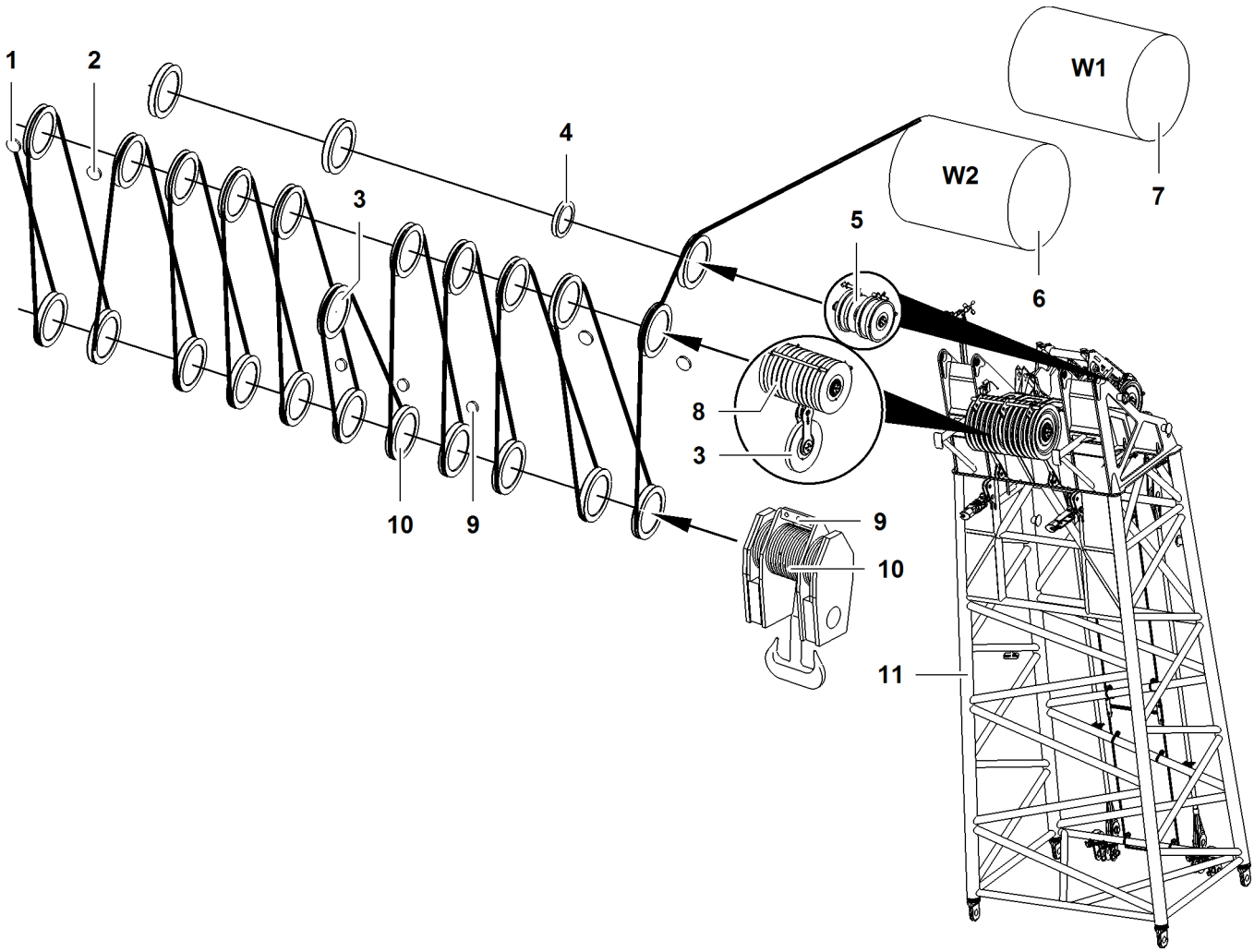

Fig. 4926: Reeving diagrams for one rope across main boom head 2821 (load position2)

1	Outer rope fixing point (2x) of main boom head	**5**	Gantry pulley (3x) of main boom head	**9**	Rope fixing points of pulley block
2	Inner rope fixing point (2x) of main boom head	**6**	Winch2	**10**	Pulley set of pulley block
3	11th pulley of main boom head	**7**	Winch1	**11**	Main boom head
4	Pulley for rope of jib luffing winch	**8**	Pulley (10x) of main boom head		

DANGER
Inadmissible number of reevings!
Structural breakdown, toppling of machine.

▶ Choose correct number of reevings as indicated in load chart.

LWN/LR.x/V03.01//Auslieferung/2015-06-03/en

copyright by LIEBHERR

Reeving diagrams for one rope across main boom head 2821 (load position2)	
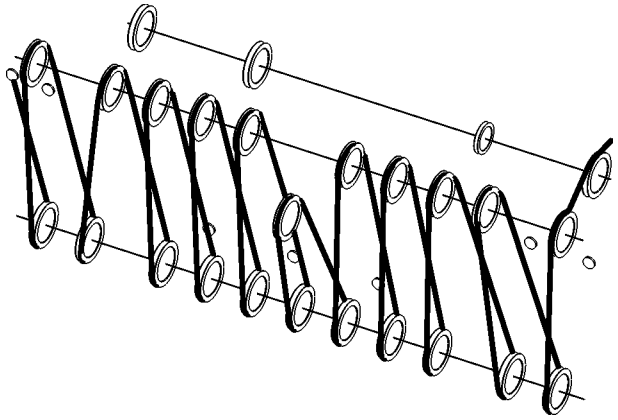 22x	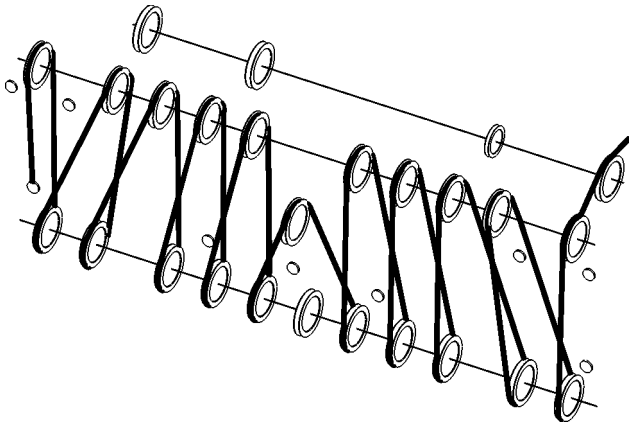 21x
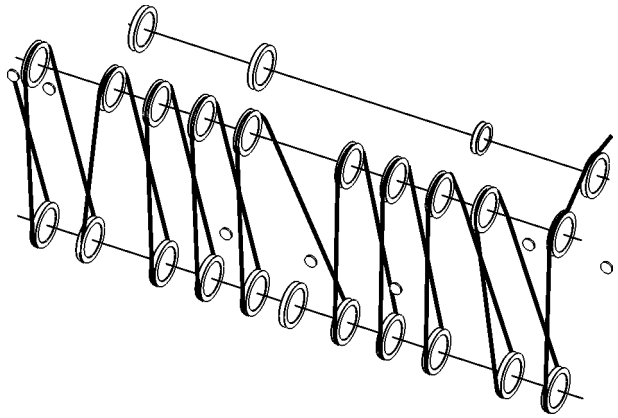 20x	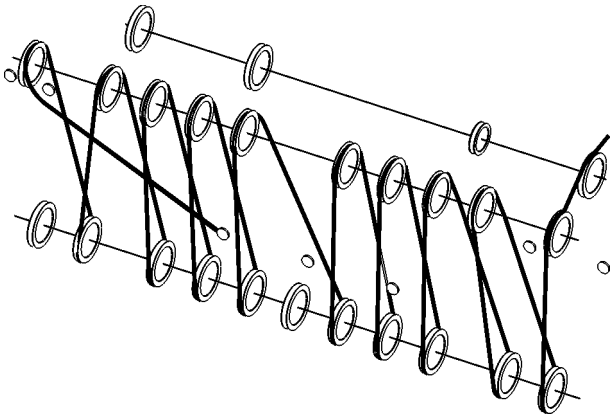 19x
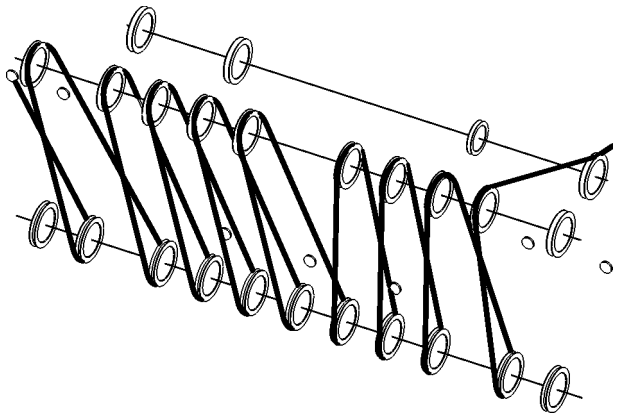 18x	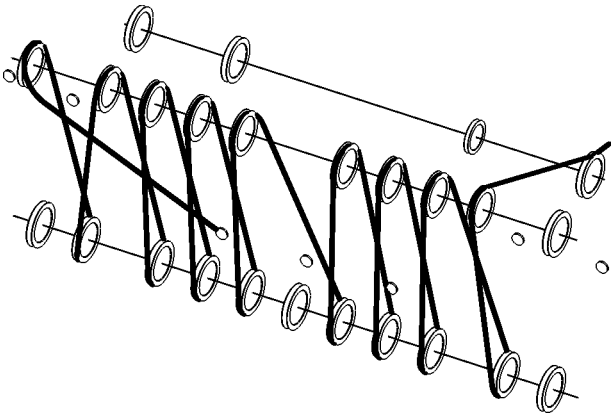 17x

LWN/LR.x/V03.01//Auslieferung/2015-06-03/en

copyright by
LIEBHERR

Reeving diagrams for one rope across main boom head 2821 (load position2)	
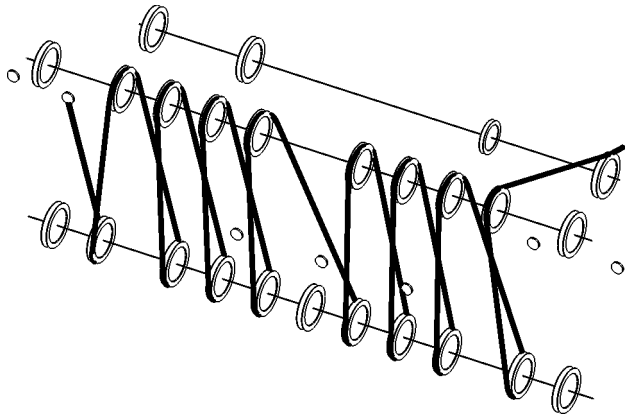 16x	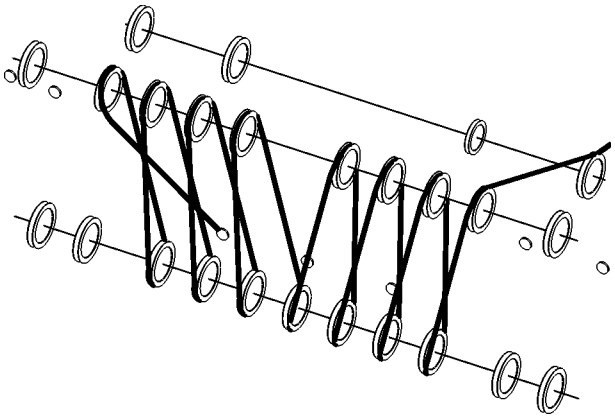 15x
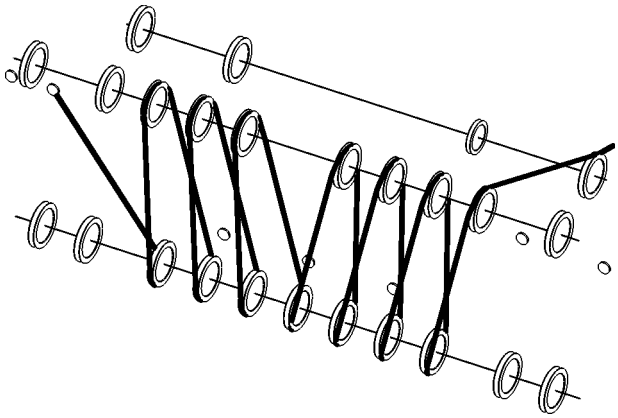 14x	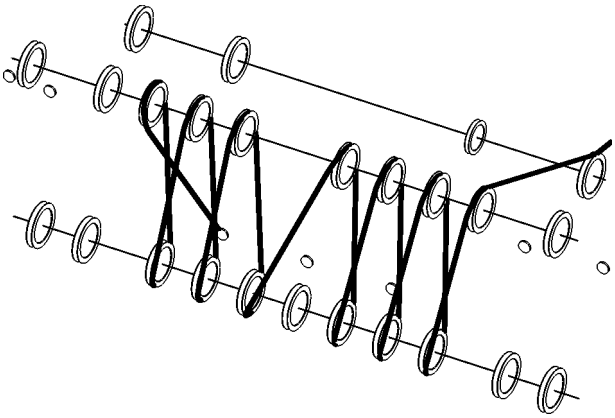 13x
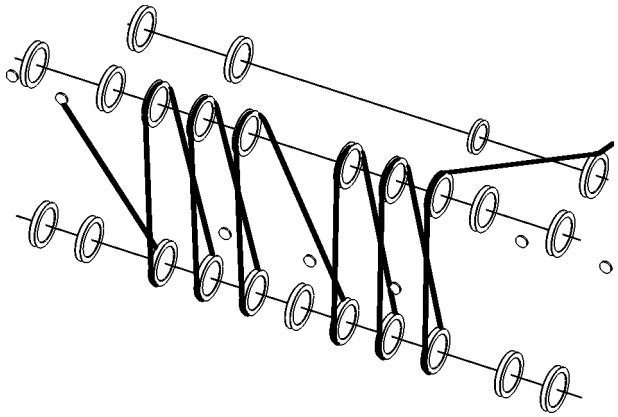 12x	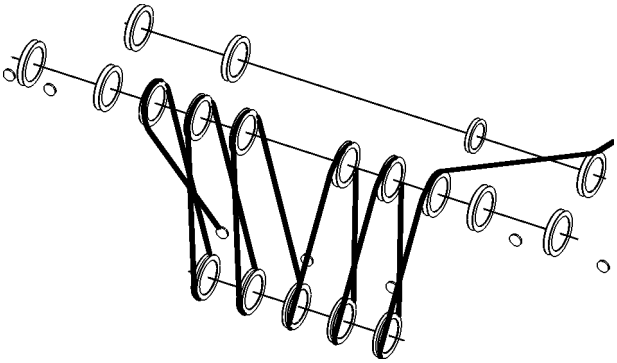 11x
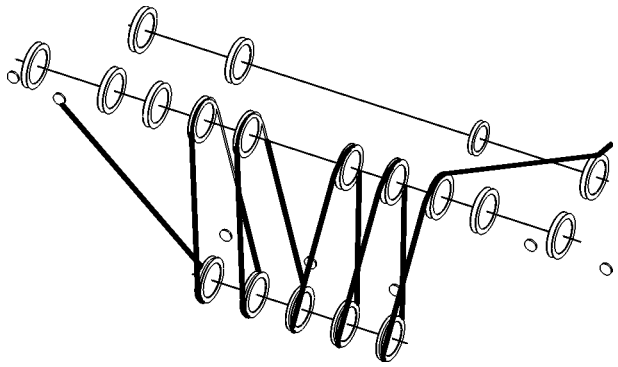 10x	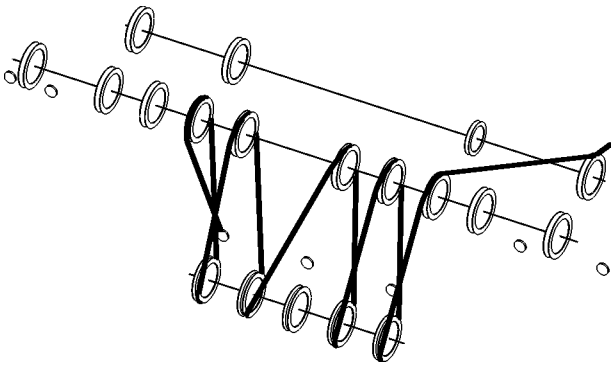 9x

LWN/LR.x/V03.01//Auslieferung/2015-06-03/en

copyright by LIEBHERR

Reeving diagrams for one rope across main boom head 2821 (load position2)	
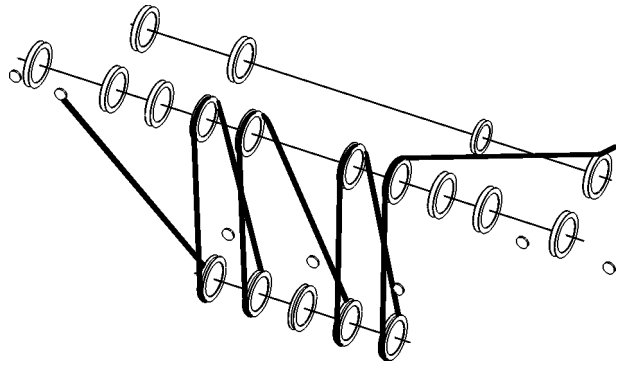 8x	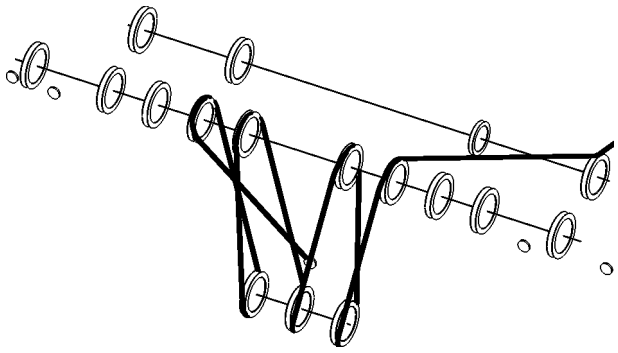 7x
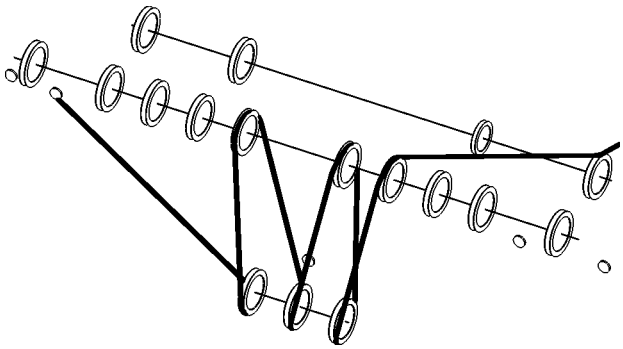 6x	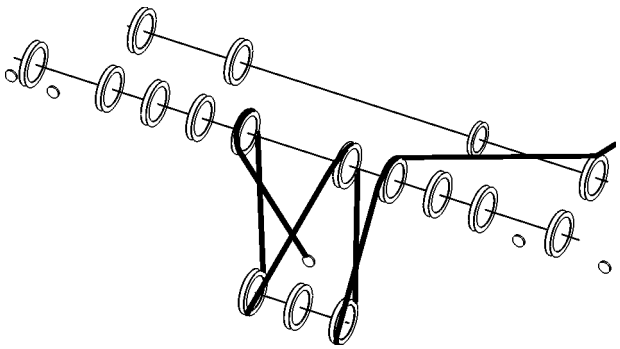 5x
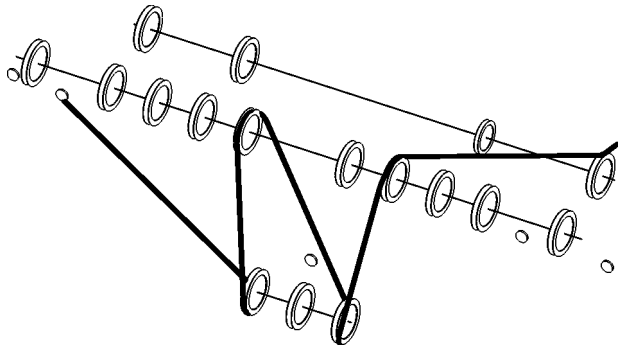 4x	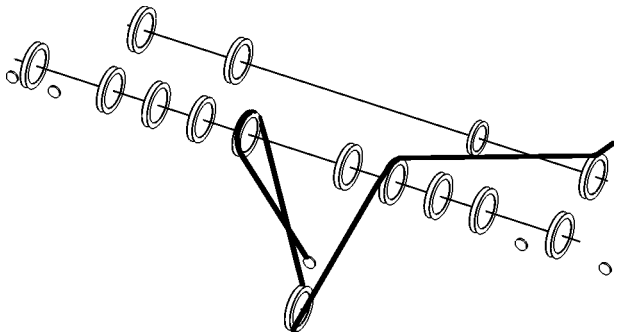 3x
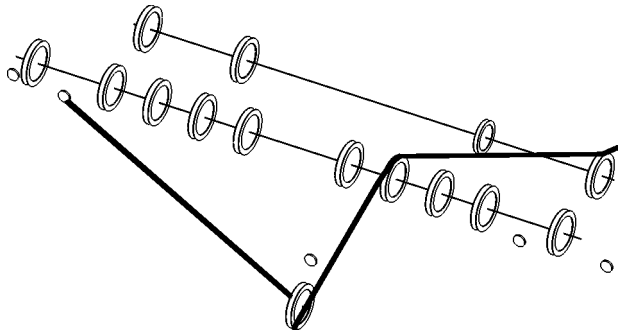 2x	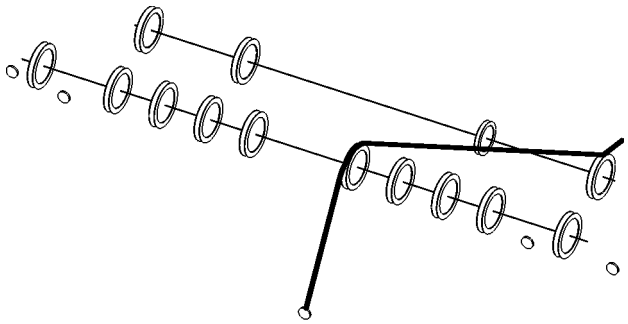 1x

Tab. 541: Reeving diagrams for one rope across main boom head 2821 (load position2)

LWN/LR.x/V03.01//Auslieferung/2015-06-03/en

copyright by
LIEBHERR

7.20.10 Reeving diagrams for one rope across auxiliary jib (30 t (66.000 lb)) on jib head 2316 (load position1)

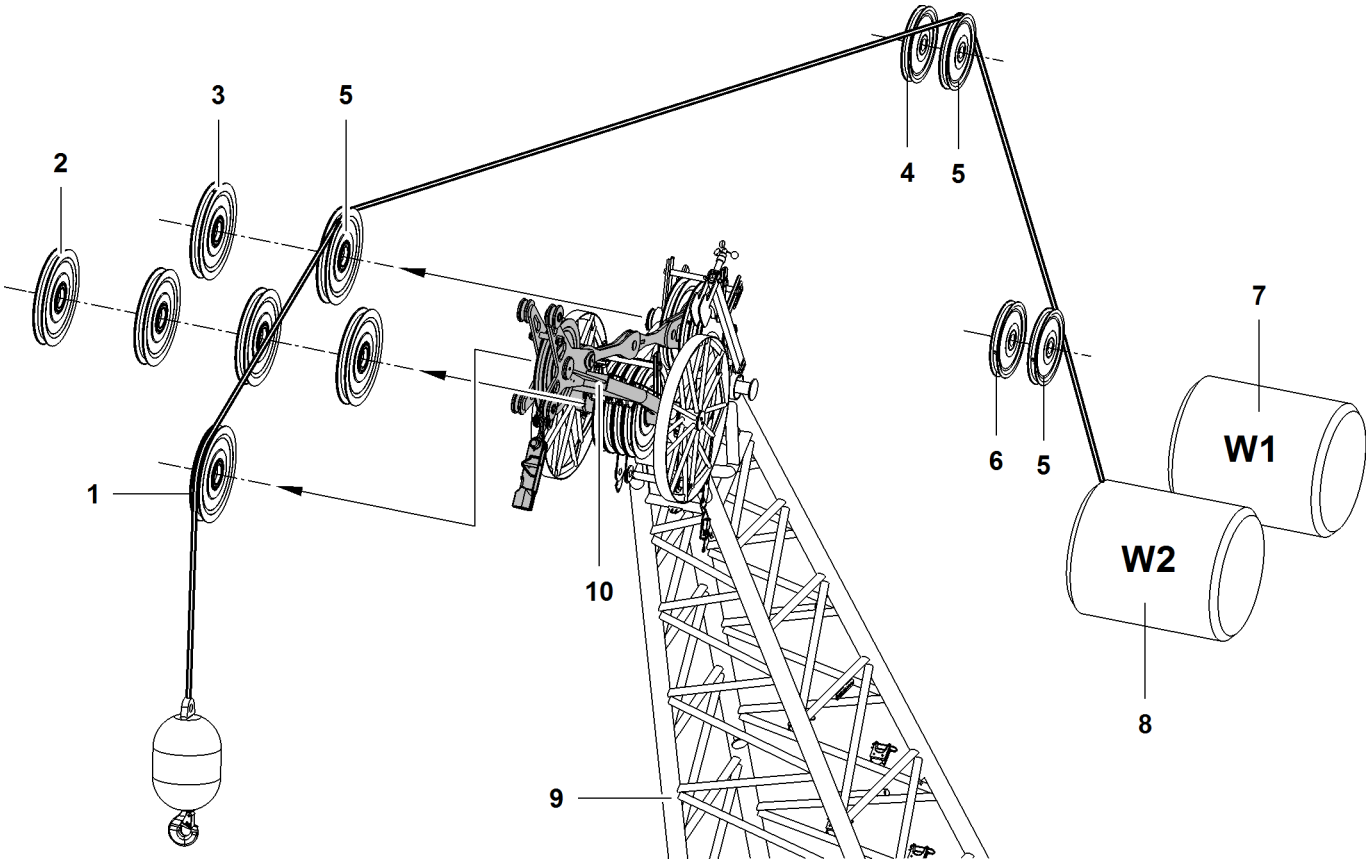

Fig. 4949: Reeving diagrams for one rope across auxiliary jib (30 t (66.000 lb)) on jib head 2316 (load position1)

1	Pulley of auxiliary jib (30 t (66.000 lb))	**5**	Retrofit kit* for operation with two ropes across jib head	**9**	Jib head
2	Pulley (4x) of jib head	**6**	Pulley of A-frame2	**10**	Auxiliary jib (30 t (66.000 lb))
3	Gantry pulley of jib head	**7**	Winch1		
4	Pulley of A-frame3	**8**	Winch2		

DANGER
Inadmissible number of reevings!
Structural breakdown, toppling of machine.

▶ Choose correct number of reevings as indicated in load chart.

LWN/LR.x/V03.01//Auslieferung/2015-06-03/en

copyright by LIEBHERR

Reeving diagrams for one rope across auxiliary jib (30 t (66.000 lb)) on jib head 2316 (load position1)	
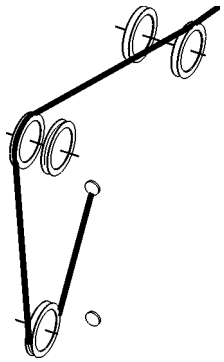 2x	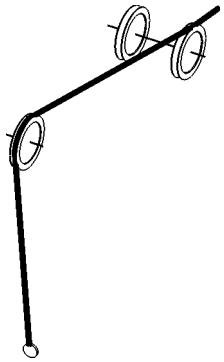 1x

Tab. 542: Reeving diagrams for one rope across auxiliary jib (30 t (66.000 lb)) on jib head 2316 (load position1)

LWN/LR.x/V03.01//Auslieferung/2015-06-03/en

copyright by
LIEBHERR

7.21 Luffing jib 1916

System-relevant information for luffing jib 1916:
- Configuration of jib
  - Mid-point suspensions installation positions
- Lengths of jib mid-point suspensions
- Configuration of main boom
- Overview of steel pendant straps on luffing jib 1916
- Overview of CF pendant straps on luffing jib 1916
- Reeving diagram A-frame2/A-frame3
- Reeving diagrams for one rope across jib head 1916 (load position1)
- Reeving diagrams for two ropes across jib head 1916 (load position1)
- Reeving diagrams for one rope across main boom head 2821 (load position2)
- Reeving diagrams for one rope across auxiliary jib (15 t (33.000 lb)) on jib head 1916 (load position1)

7.21.1 Configuration of jib

DANGER
Excess length of jib!
Structural breakdown.

▶ Check jib length in load chart for validity.

Jib length	Configuration of jib (symbolic)
20 m 66 ft	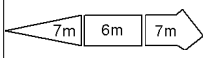
23 m 76 ft	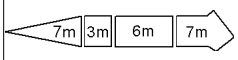
26 m 85 ft	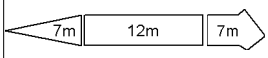
29 m 95 ft	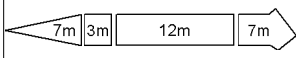
32 m 105 ft	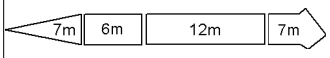
35 m 115 ft	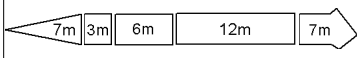
38 m 125 ft	
41 m 134 ft	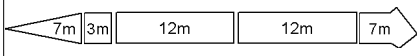
44 m 144 ft	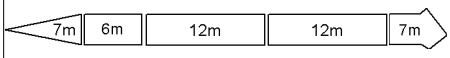
47 m 154 ft	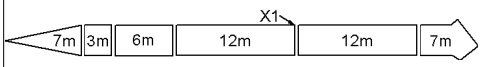
50 m 164 ft	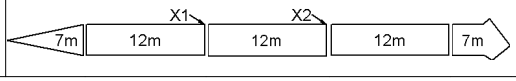

LWN/LR.x/V03.01/Auslieferung/2015-06-03/en

copyright by LIEBHERR

Jib length	Configuration of jib (symbolic)
53 m 174 ft	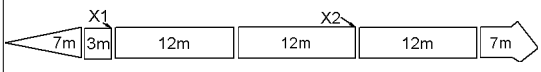
56 m 184 ft	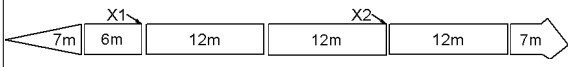
59 m 194 ft	
62 m 203 ft	
65 m 213 ft	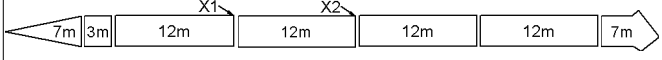
68 m 223 ft	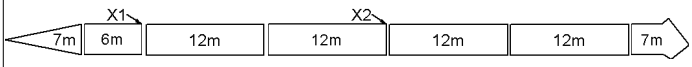
71 m 233 ft	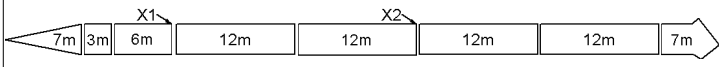
74 m 243 ft	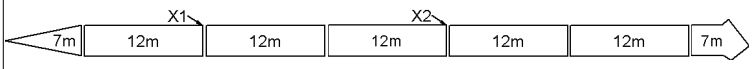
77 m 253 ft	
80 m 262 ft	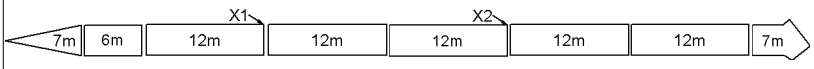
83 m 272 ft	
86 m 282 ft	
89 m 292 ft	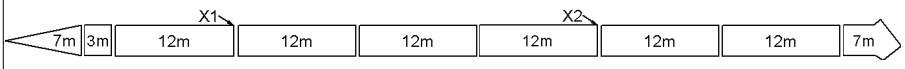
92 m 302 ft	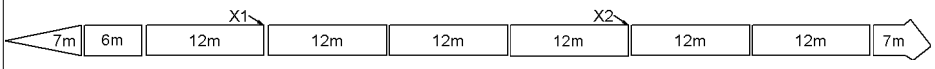
95 m 312 ft	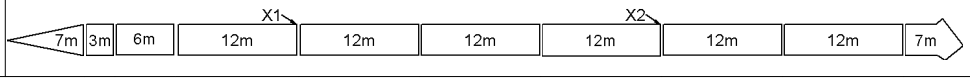

Tab. 543: Configuration of luffing jib 1916

X1 - Installation position mid-point suspension 1

X2 - Installation position mid-point suspension 2

7.21.2 Lengths of jib mid-point suspensions

Jib length	Backstay pendant 1 (X1)	Backstay pendant 2 (X2)
	Rope length	Rope length
47 m 154 ft	2.1 m 6‘ 11“ ft-in	

LWN/LR.x/V03.01//Auslieferung/2015-06-03/en

copyright by LIEBHERR

Jib length	Backstay pendant 1 (X1)	Backstay pendant 2 (X2)
	Rope length	Rope length
50 m 164 ft	4.2 m 13‘ 9“ ft-in = 2.6 m (8‘ 6“ ft-in) + 1.6 m (5‘ 3“ ft-in)	2.1 m 6‘ 11“ ft-in
53 m 174 ft	6 m 19‘ 8“ ft-in = 3.0 m (9‘ 10“ ft-in) + 3.0 m (9‘ 10“ ft-in)	2.1 m 6‘ 11“ ft-in
56 m 184 ft	5.6 m 18‘ 4“ ft-in = 3.0 m (9‘ 10“ ft-in) + 2.6 m (8‘ 6“ ft-in)	1.6 m 5‘ 3“ ft-in
59 m 194 ft	5.2 m 17‘ 1“ ft-in = 2.6 m (8‘ 6“ ft-in) + 2.6 m (8‘ 6“ ft-in)	1.6 m 5‘ 3“ ft-in
62 m 203 ft	4.7 m 15‘ 5“ ft-in = 2.6 m (8‘ 6“ ft-in) + 2.1 m (6‘ 11“ ft-in)	1.6 m 5‘ 3“ ft-in
65 m 213 ft	4.6 m 15‘ 1“ ft-in = 3.0 m (9‘ 10“ ft-in) + 1.6 m (5‘ 3“ ft-in)	3.0 m 9‘ 10“ ft-in
68 m 223 ft	6 m 19‘ 8“ ft-in = 3.0 m (9‘ 10“ ft-in) + 3.0 m (9‘ 10“ ft-in)	2.6 m 8‘ 6“ ft-in
71 m 233 ft	5.2 m 17‘ 1“ ft-in = 2.6 m (8‘ 6“ ft-in) + 2.6 m (8‘ 6“ ft-in)	2.1 m 6‘ 11“ ft-in
74 m 243 ft	5.1 m 16‘ 9“ ft-in = 3.0 m (9‘ 10“ ft-in) + 2.1 m (6‘ 11“ ft-in)	2.1 m 6‘ 11“ ft-in
77 m 253 ft	4.7 m 15‘ 5“ ft-in = 2.6 m (8‘ 6“ ft-in) + 2.1 m (6‘ 11“ ft-in)	2.1 m 6‘ 11“ ft-in
80 m 262 ft	4.2 m 13‘ 9“ ft-in = 2.1 m (6‘ 11“ ft-in) + 2.1 m (6‘ 11“ ft-in)	1.6 m 5‘ 3“ ft-in

LWN/LR.x/V03.01//Auslieferung/2015-06-03/en

copyright by
LIEBHERR

Jib length	Backstay pendant 1 (X1)	Backstay pendant 2 (X2)
	Rope length	Rope length
83 m 272 ft	4.2 m 13‘ 9“ ft-in = 2.1 m (6‘ 11“ ft-in) + 2.1 m (6‘ 11“ ft-in)	1.6 m 5‘ 3“ ft-in
86 m 282 ft	5.2 m 17‘ 1“ ft-in = 2.6 m (8‘ 6“ ft-in) + 2.6 m (8‘ 6“ ft-in)	1.6 m 5‘ 3“ ft-in
89 m 292 ft	4.7 m 15‘ 5“ ft-in = 2.6 m (8‘ 6“ ft-in) + 2.1 m (6‘ 11“ ft-in)	1.6 m 5‘ 3“ ft-in
92 m 302 ft	4.2 m 13‘ 9“ ft-in = 2.1 m (6‘ 11“ ft-in) + 2.1 m (6‘ 11“ ft-in)	1.6 m 5‘ 3“ ft-in
95 m 312 ft	4.2 m 13‘ 9“ ft-in = 2.1 m (6‘ 11“ ft-in) + 2.1 m (6‘ 11“ ft-in)	1.6 m 5‘ 3“ ft-in

Tab. 544: Lengths of jib mid-point suspensions - 1916 luffing jib

7.21.3 Configuration of main boom

DANGER
Excess length of main boom!
Structural breakdown.

▶ Check main boom length in load chart for validity.

Note

▶ See system-relevant data of main boom for information on main boom configuration (For more information see: 7.5.1 Configuration of main boom, page 1230) .

LWN/LR.x/V03.01//Auslieferung/2015-06-03/en

copyright by
LIEBHERR

7.21.4 Overview of steel pendant straps on luffing jib 1916

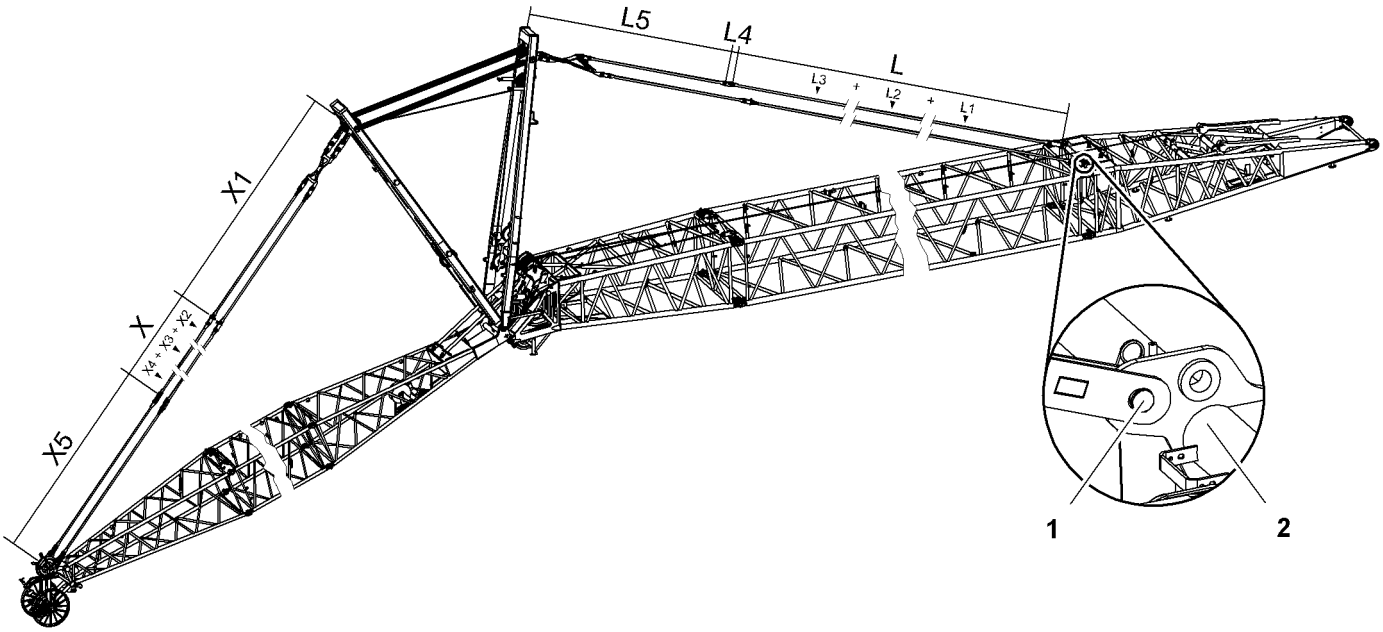

Fig. 5115: Overview of steel pendant straps on luffing jib 1916

1 Pin connection point for jib backstay straps

2 Main boom base section

Jib backstay straps A-frame2 to main boom base section 2821

Name			Value
L	**Jib backstay straps** consisting of:		
	L1	**Jib backstay strap 3 m (10 ft)** (For more information see: Jib backstay strap 3 m (10 ft), page 191)	Total **L1**
	L2	**Jib backstay strap 6 m (20 ft)** (For more information see: Jib backstay strap 6 m (20 ft), page 193)	Total **L2**
	L3	**Jib backstay strap 12 m (40 ft)** (For more information see: Jib backstay strap 12 m (40 ft), page 195)	Total **L3**
L4	**Connecting link (conversion kit)** (For more information see: Connecting link (conversion kit), page 349)		390 mm 1‘ 3“ ft-in
L5	**A-frame2 equalizer (jib backstay strap)** (For more information see: Equalizer A-frame2 (jib backstay strap), page 343)		7769 mm 25‘ 6“ ft-in

Tab. 545: Jib backstay straps A-frame2 to main boom base section 2821

Configuration of main boom pendant straps (L):

Required number of jib backstay straps 3 m (10 ft) (**L1**) corresponds to number of main boom sections 3 m (10 ft).

Required number of jib backstay straps 6 m (20 ft) (**L2**) corresponds to number of main boom sections 6 m (20 ft).

LWN/LR.x/V03.01//Auslieferung/2015-06-03/en

copyright by LIEBHERR

Required number of jib backstay straps 12 m (40 ft) (**L3**) corresponds to number of main boom sections 12 m (40 ft).

Note

▶ For the admissible number of main boom sections 3 m (10 ft), 6 m (20 ft), 12 m (40 ft), refer to the load chart.

Pendant straps A-frame3 to jib head 1916

Name			Value
X1	**A-frame3 equalizer (jib pendant strap)** (For more information see: A-frame3 equalizer (jib pendant strap), page 344)		7550 mm 24‘ 9“ ft-in
X	**Jib pendant straps** consisting of:		Total **X2** + Total **X3** + Total **X4**
	X2	**Jib pendant strap 3 m (10 ft)** (For more information see: Jib pendant strap 3 m (10 ft), page 346)	
	X3	**Jib pendant strap 6 m (20 ft)** (For more information see: Jib pendant strap 6 m (20 ft), page 347)	
	X4	**Jib pendant strap 12 m (40 ft)** (For more information see: Jib pendant strap 12 m (40 ft), page 347)	
X5	**Jib pendant strap on jib head 1916** (For more information see: Jib pendant strap on jib head 1916.21, page 348)		6500 mm 21‘ 4“ ft-in

Tab. 546: Pendant straps A-frame3 to jib head 1916

Configuration of jib pendant straps (X):

Required number of jib pendant straps 3 m (10 ft) (**X2**) corresponds to number of jib sections 3 m (10 ft).

Required number of jib pendant straps 6 m (20 ft) (**X3**) corresponds to number of jib sections 6 m (20 ft).

Required number of jib pendant straps 12 m (40 ft) (**X4**) corresponds to number of jib sections 12 m (40 ft).

Note

▶ For the admissible number of jib sections 3 m (10 ft), 6 m (20 ft), 12 m (40 ft), refer to the following table: (For more information see: 7.21.1 Configuration of jib, page 1590)

LWN/LR.x/V03.01//Auslieferung/2015-06-03/en

copyright by
LIEBHERR

7.21.5 Overview of CF pendant straps on luffing jib 1916

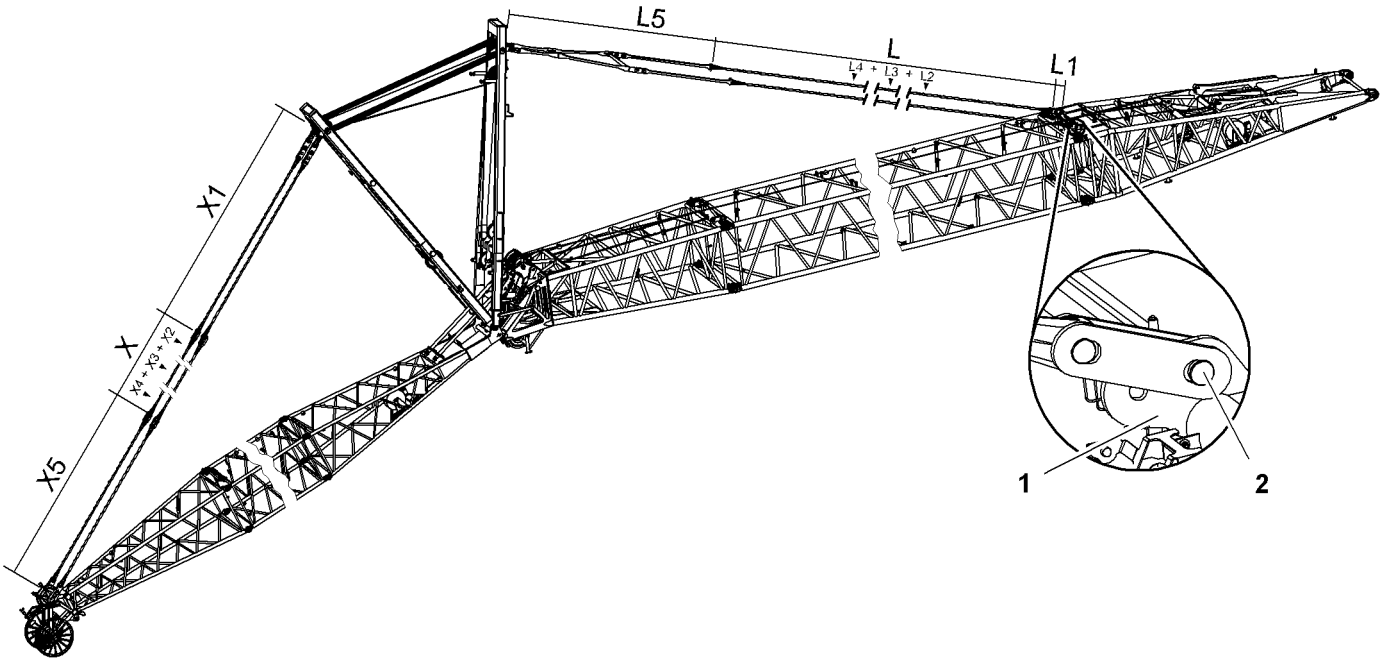

Fig. 5116: Overview of CF pendant straps on luffing jib 1916

1 Main boom base section

2 Pin connection point for jib backstay straps

Jib backstay straps A-frame2 to main boom base section 2821

Name			Value
L1	**Connecting link** (For more information see: Connecting link, page 200)		350 mm 1‘ 2“ ft-in
L	**Jib backstay straps** consisting of:		Total **L2** + Total **L3** + Total **L4**
	L2	**Jib backstay strap 3 m (10 ft)** (For more information see: Jib backstay strap 3 m (10 ft), page 202)	
	L3	**Jib backstay strap 6 m (20 ft)** (For more information see: Jib backstay strap 6 m (20 ft), page 206)	
	L4	**Jib backstay strap 12 m (40 ft)** (For more information see: Jib backstay strap 12 m (40 ft), page 210)	
L5	**A-frame2 equalizer (jib backstay strap)** (For more information see: Equalizer A-frame2 (jib backstay strap), page 350)		7769 mm 25‘ 6“ ft-in

Tab. 547: Jib backstay straps A-frame2 to main boom base section 2821

Configuration of jib backstay straps (L):

Required number of jib backstay straps 3 m (10 ft) (**L2**) corresponds to number of main boom sections 3 m (10 ft).

LWN/LR.x/V03.01//Auslieferung/2015-06-03/en

copyright by LIEBHERR

Required number of jib backstay straps 6 m (20 ft) (**L3**) corresponds to number of main boom sections 6 m (20 ft).

Required number of jib backstay straps 12 m (40 ft) (**L4**) corresponds to number of main boom sections 12 m (40 ft).

Note

▶ For the admissible number of main boom sections 3 m (10 ft), 6 m (20 ft), 12 m (40 ft), refer to the load chart.

The jib backstay straps **(L)** may consist of generation A and generation B jib backstay straps (For more information see: 1.11.9 CF pendant straps on main boom 2821, page 198) . Mixing is only admissible if the number of generation B jib backstay straps only differs by at most 1 in the left and the right strand of the jib backstay straps.

DANGER
Inadmissible mixing of generation A and generation B jib backstay straps!
Structural failure.

▶ Ensure that the number of generation B jib backstay straps differs by at most 1 in the left and the right strand of the jib backstay straps.

Pendant straps A-frame3 to jib head 1916

Name			Value
X1	**A-frame3 equalizer (jib pendant strap)** (For more information see: A-frame3 equalizer (jib pendant strap), page 352)		7550 mm 24‘ 9“ ft-in
X	**Jib pendant straps** consisting of:		Total **X2** + Total **X3** + Total **X4**
	X2	**Jib pendant strap 3 m (10 ft)** (For more information see: Jib pendant strap 3 m (10 ft), page 354)	
	X3	**Jib pendant strap 6 m (20 ft)** (For more information see: Jib pendant strap 6 m (20 ft), page 356)	
	X4	**Jib pendant strap 12 m (40 ft)** (For more information see: Jib pendant strap 12 m (40 ft), page 358)	
X5	**Jib pendant strap on jib head 1916** (For more information see: Jib pendant strap on jib head 1916.21, page 359)		6500 mm 21‘ 4“ ft-in

Tab. 548: Pendant straps A-frame3 to jib head 1916

Configuration of jib pendant straps (L):

Required number of jib pendant straps 3 m (10 ft) (**X2**) corresponds to number of jib sections 3 m (10 ft).

Required number of jib pendant straps 6 m (20 ft) (**X3**) corresponds to number of jib sections 6 m (20 ft).

Required number of jib pendant straps 12 m (40 ft) (**X4**) corresponds to number of jib sections 12 m (40 ft).

LWN/LR.x/V03.01//Auslieferung/2015-06-03/en

copyright by
LIEBHERR

Note

▶ For the admissible number of jib sections 3 m (10 ft), 6 m (20 ft), 12 m (40 ft), refer to the following table: (For more information see: 7.21.1 Configuration of jib, page 1590)

The jib pendant straps **(X)** may consist of generation A and generation B jib pendant straps (For more information see: 1.21.8 CF pendant straps on luffing jib 1916, page 350) . Mixing is only admissible if the number of generation B jib pendant straps only differs by at most 1 in the left and the right strand of the jib pendant straps.

DANGER
Inadmissible mixing of generation A and generation B jib pendant straps!
Structural failure.

▶ Ensure that the number of generation B jib pendant straps differs by at most 1 in the left and the right strand of the jib pendant straps.

LWN/LR.x/V03.01//Auslieferung/2015-06-03/en

copyright by
LIEBHERR

7.21.6 Rope reeving system for A-frame 2/A-frame 3

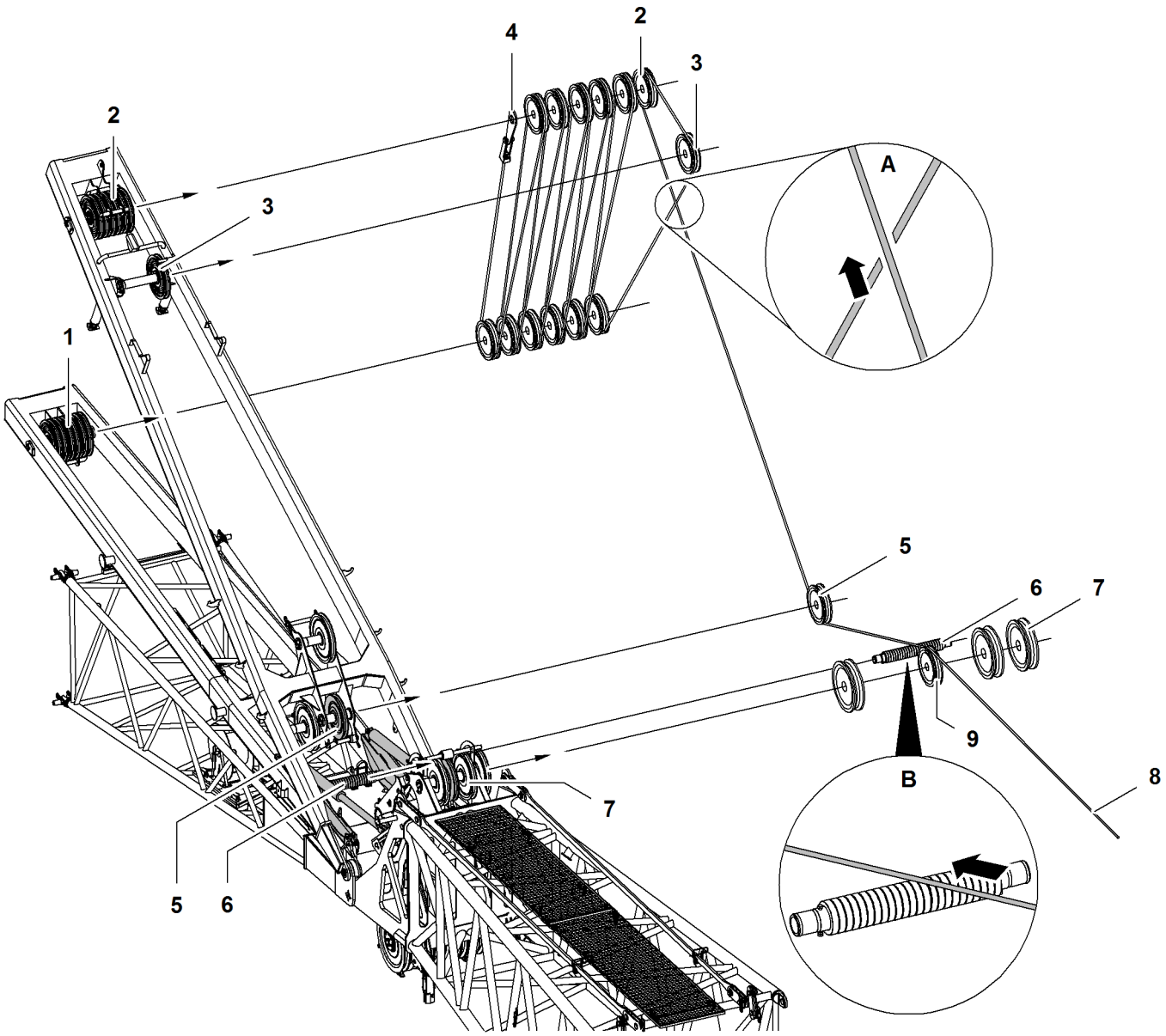

Fig. 5117: Reeving diagram for A-frame2/A-frame3 - Luffing jib 1916

1	Pulley set A-frame3	**4**	Rope fixing point	**7**	Gantry pulley main boom head (3x)
2	Pulley set A-frame2	**5**	Rope pulley A-frame2	**8**	Rope of the jib luffing winch
3	Pulley A-frame2	**6**	Rope protection roller support	**9**	Pulley of the jib luffing winch

Detail A:

The rope of the jib luffing winch **8** between pulley **3** and pulley set **1** runs behind the rope of the rope pulley **5** in A-frame2.

Detail B:

The rope of the jib luffing winch **8** runs over the rope protection roller **6**.

LWN/LR.x/V03.01//Auslieferung/2015-06-03/en

copyright by
LIEBHERR

7.21.7 Reeving diagrams for one rope across jib head 1916 (load position1)

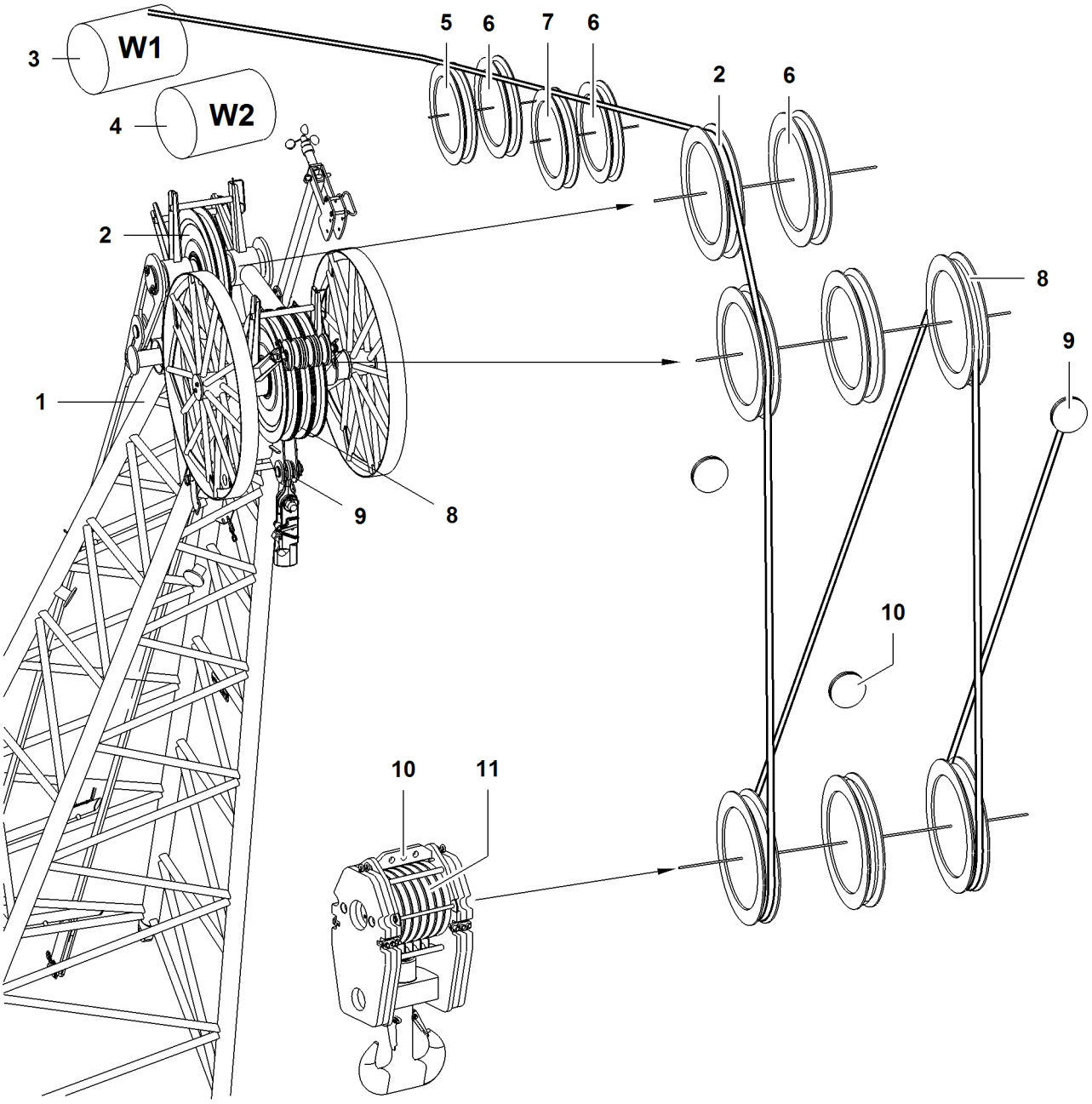

Fig. 5118: Reeving diagrams for one rope across jib head 1916 (load position1)

1	Jib head	**5**	Pulley of A-frame2	**9**	Rope fixing point of jib head
2	Gantry pulley of jib head	**6**	Retrofit kit* for operation with two ropes across jib head	**10**	Rope fixing points of pulley block
3	Winch1	**7**	Pulley of A-frame3	**11**	Pulley set of pulley block
4	Winch2	**8**	Pulley (3x) of jib head		

DANGER
Incorrect number of reevings!
Structural breakdown, toppling of machine.

▶ Choose the correct number of reevings as per the load chart.

LWN/LR.x/V03.01//Auslieferung/2015-06-03/en

copyright by LIEBHERR

Reeving diagrams for one rope across jib head 1916 (load position1)	
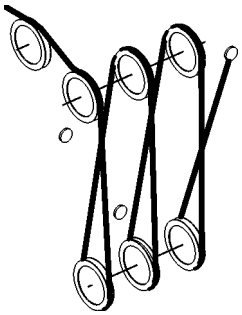 6x	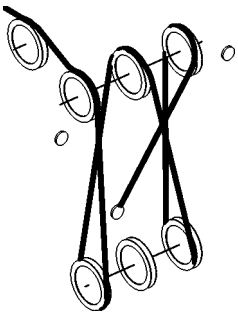 5x
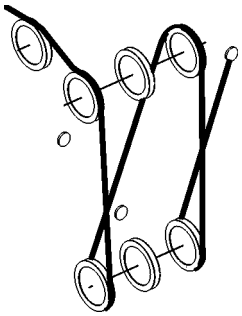 4x	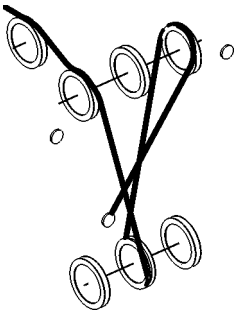 3x
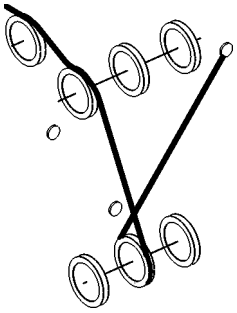 2x	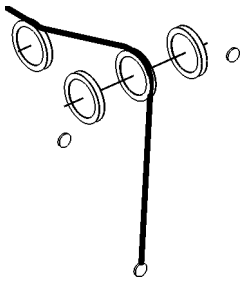 1x

Tab. 549: Reeving diagrams for one rope across jib head 1916 (load position1)

7.21.8 Reeving diagrams for two ropes across jib head 2316, 1916, 1713, 1309, 1008 (load position1)

DANGER
Inadmissible number of reevings!
Structural breakdown, toppling of machine.

▶ Choose correct number of reevings as indicated in load chart.

LWN/LR.x/V03.01//Auslieferung/2015-06-03/en

copyright by
LIEBHERR

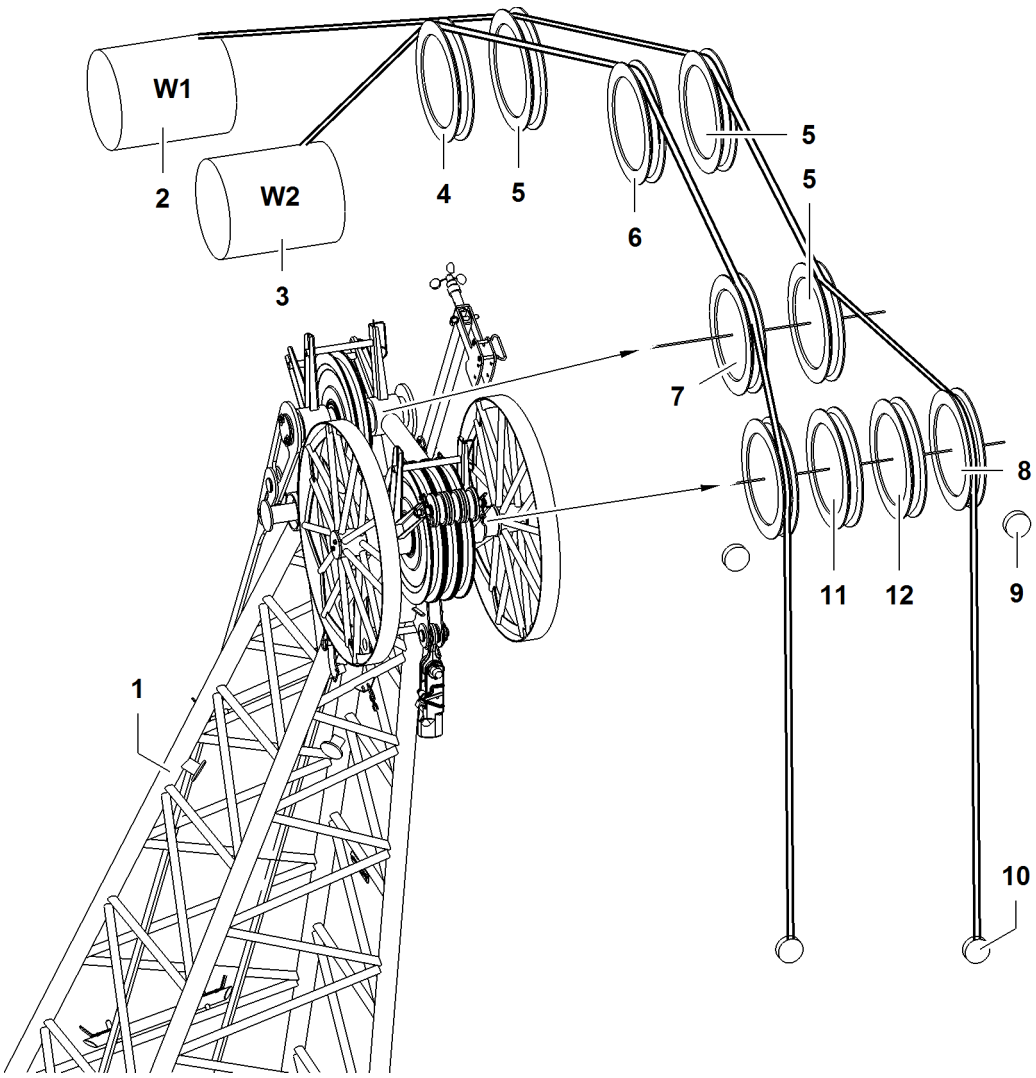

Fig. 5125: Reeving diagrams for two ropes across jib head 2316, 1916, 1713, 1309, 1008 (load position1)

1	Jib head	**5**	Retrofit kit* for operation with two ropes across jib head	**9**	Rope fixing point (2x) of jib head
2	Winch1	**6**	Pulley of A-frame3	**10**	Rope fixing points of pulley block
3	Winch2	**7**	Gantry pulleys of jib head	**11**	Pulley (only with jib head 2316)
4	Pulley of A-frame2	**8**	Pulleys of jib head	**12**	Pulley (only with jib head 2316, 1916, 1713)

LWN/LR.x/V03.01//Auslieferung/2015-06-03/en

copyright by
LIEBHERR

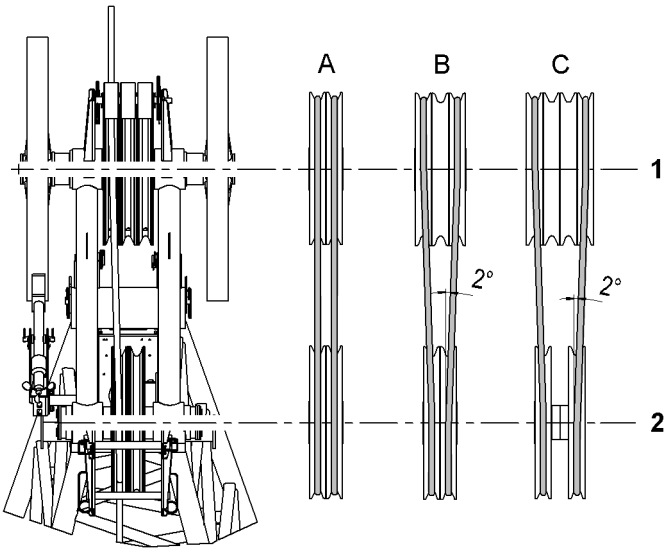

Fig. 5126: Run of the rope when two ropes pass over the jib head section

1 Pulleys of jib head **2** Gantry pulleys of jib head

Run of the rope	Type of jib
A	Luffing jib 1008 Luffing jib 1309
B	Luffing jib 1713 Luffing jib 1916
C	Luffing jib 2316

Tab. 550: Run of the rope when two ropes pass over the jib head

7.21.9 Reeving diagrams for one rope across main boom head 2821 (load position2)

If the main boom with jib attached is also used to lift a load, reeve main boom head 2821 as shown below.

LWN/LR.x/V03.01//Auslieferung/2015-06-03/en

copyright by
LIEBHERR

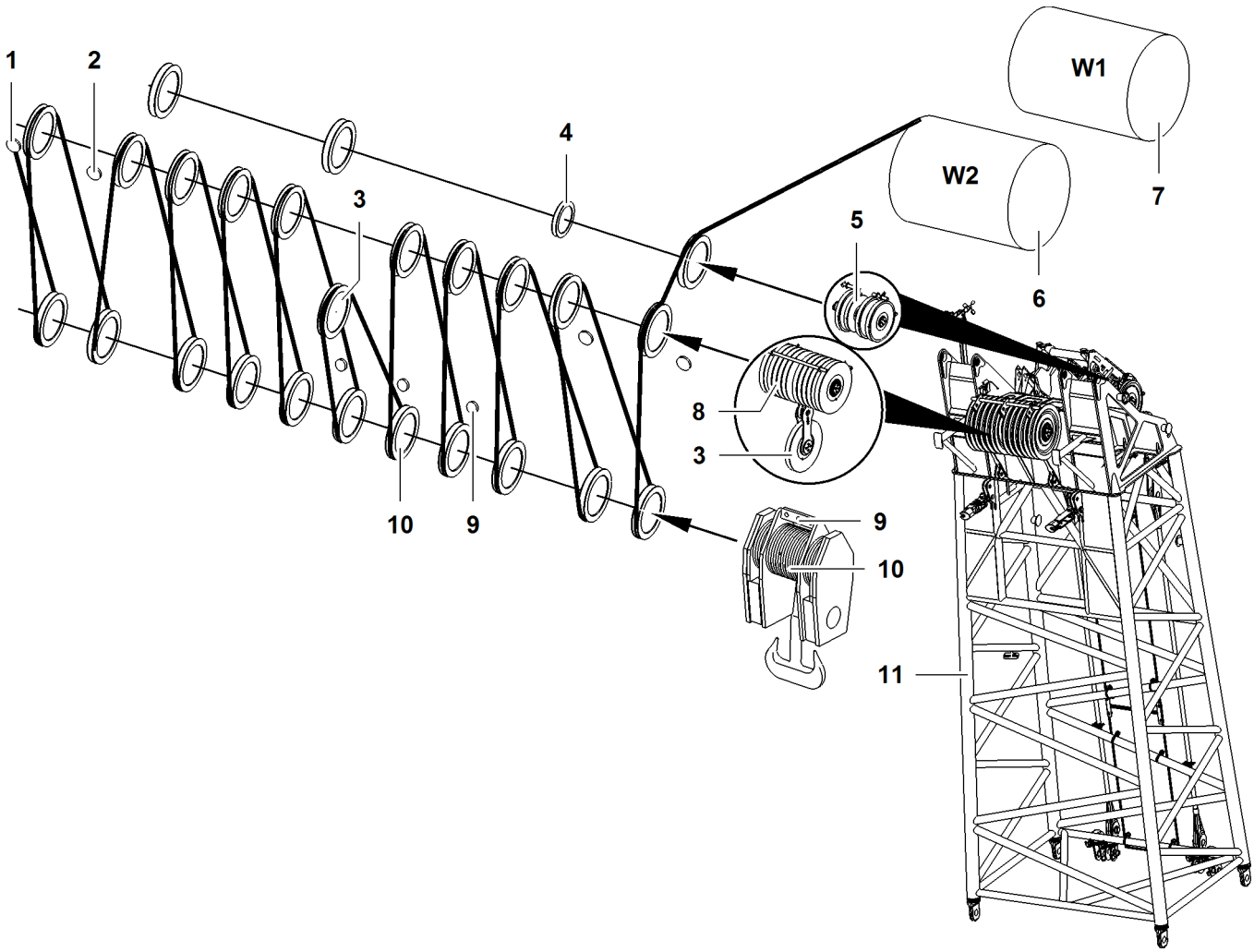

Fig. 5127: Reeving diagrams for one rope across main boom head 2821 (load position2)

1	Outer rope fixing point (2x) of main boom head	**5**	Gantry pulley (3x) of main boom head	**9**	Rope fixing points of pulley block
2	Inner rope fixing point (2x) of main boom head	**6**	Winch2	**10**	Pulley set of pulley block
3	11th pulley of main boom head	**7**	Winch1	**11**	Main boom head
4	Pulley for rope of jib luffing winch	**8**	Pulley (10x) of main boom head		

DANGER
Inadmissible number of reevings!
Structural breakdown, toppling of machine.

▶ Choose correct number of reevings as indicated in load chart.

LWN/LR.x/V03.01//Auslieferung/2015-06-03/en

copyright by
LIEBHERR

Reeving diagrams for one rope across main boom head 2821 (load position2)	
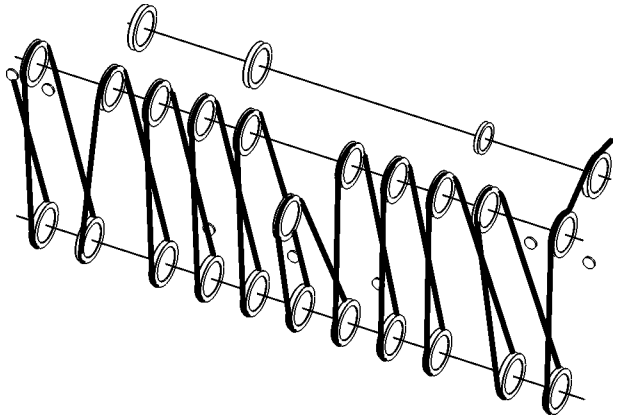 22x	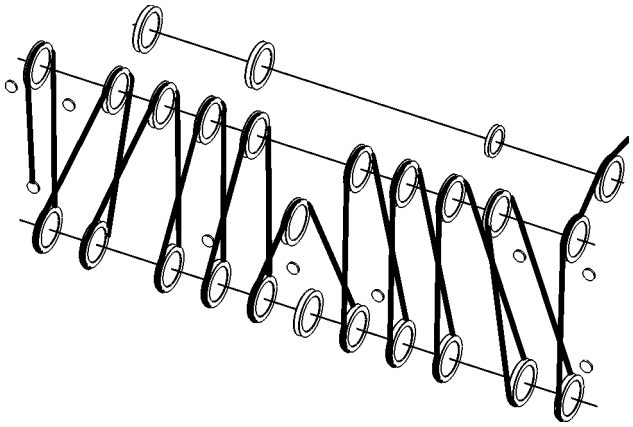 21x
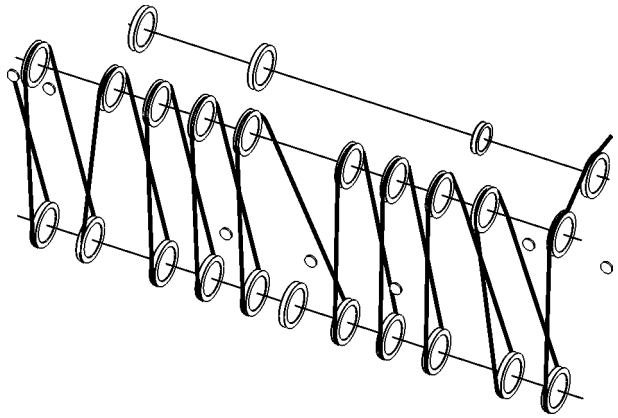 20x	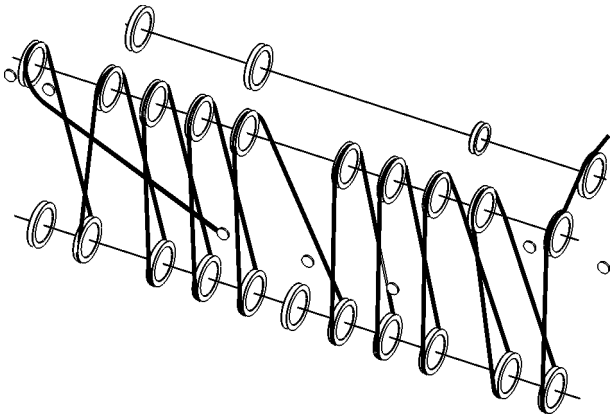 19x
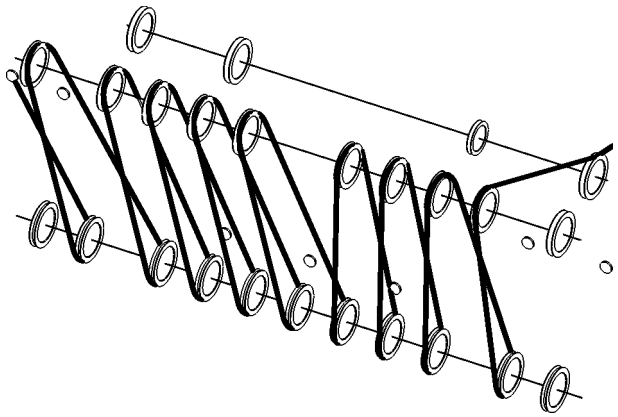 18x	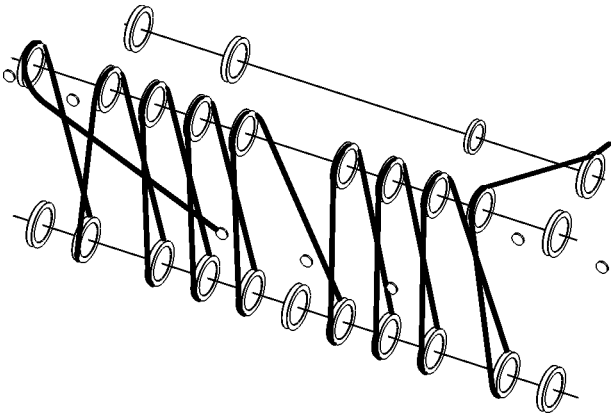 17x

LWN/LR.x/V03.01//Auslieferung/2015-06-03/en

copyright by
LIEBHERR

Reeving diagrams for one rope across main boom head 2821 (load position2)	
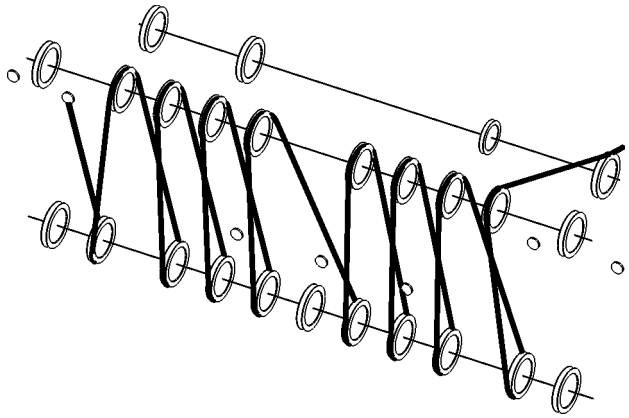 16x	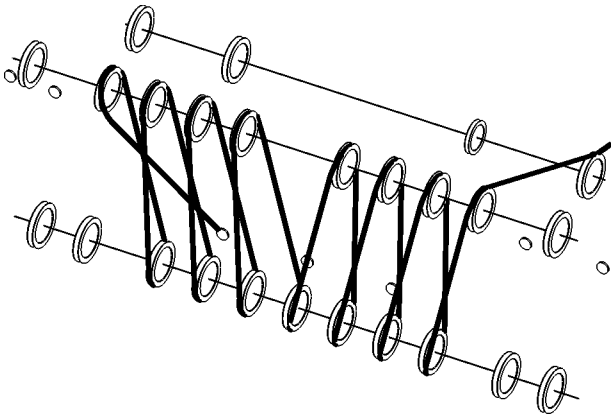 15x
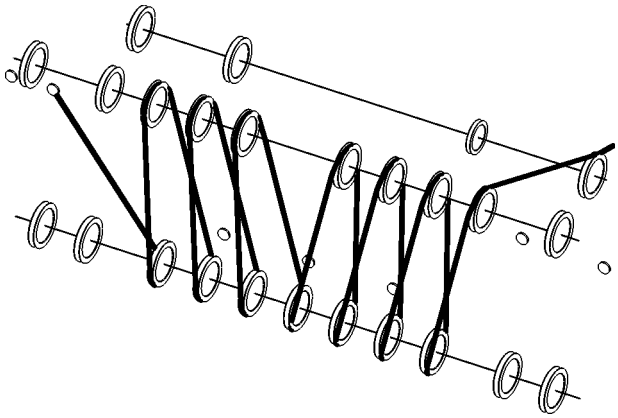 14x	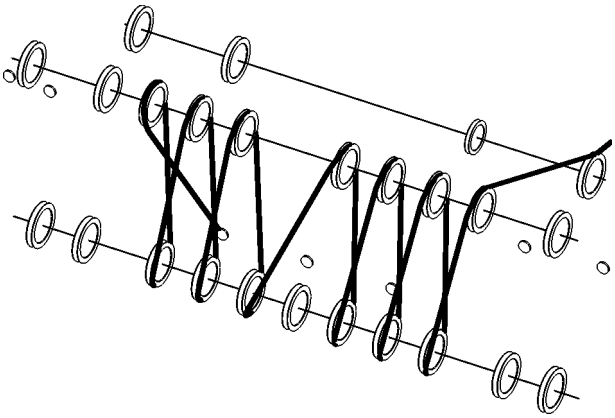 13x
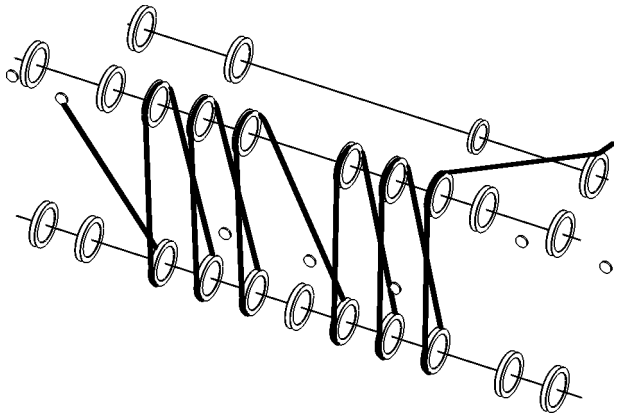 12x	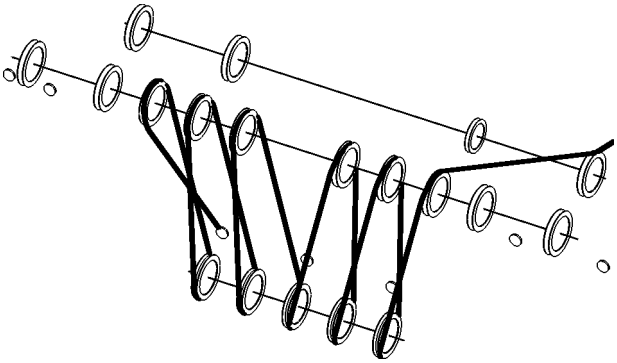 11x
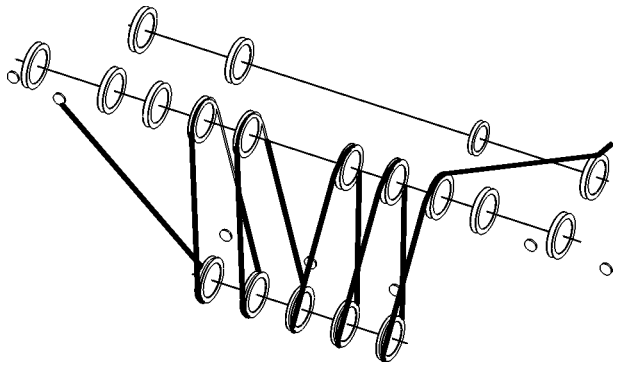 10x	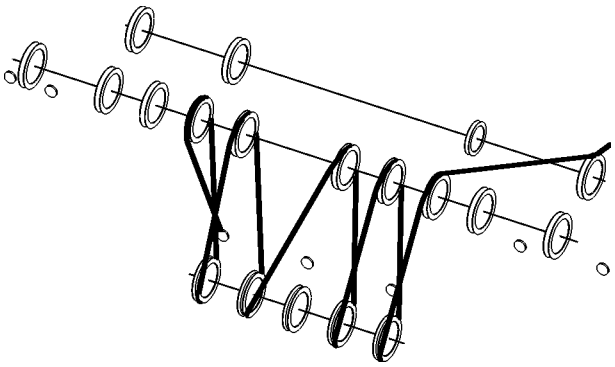 9x

LWN/LR.x/V03.01//Auslieferung/2015-06-03/en

copyright by LIEBHERR

Reeving diagrams for one rope across main boom head 2821 (load position2)	
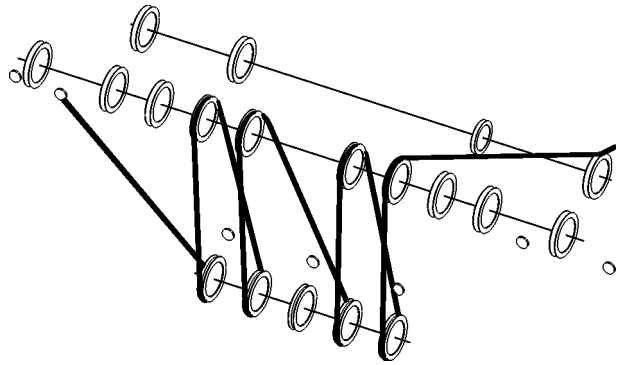 8x	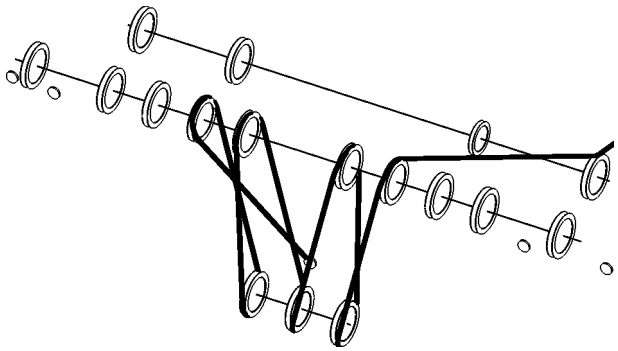 7x
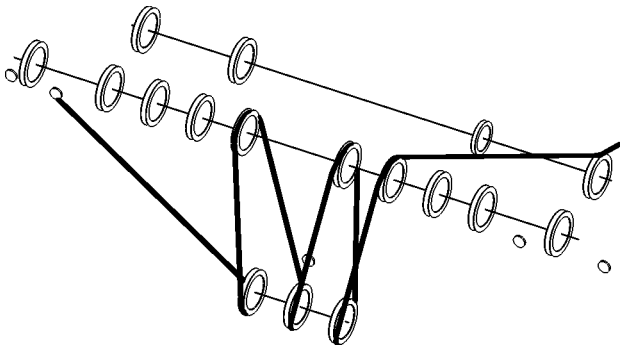 6x	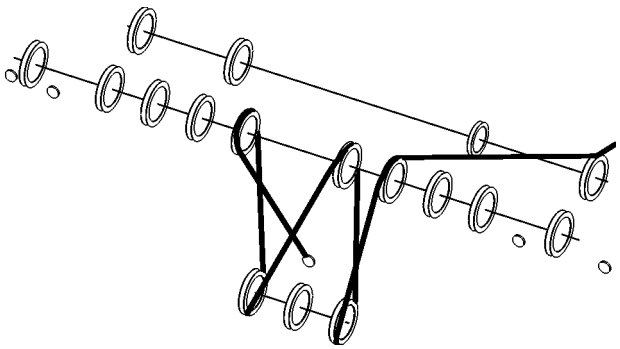 5x
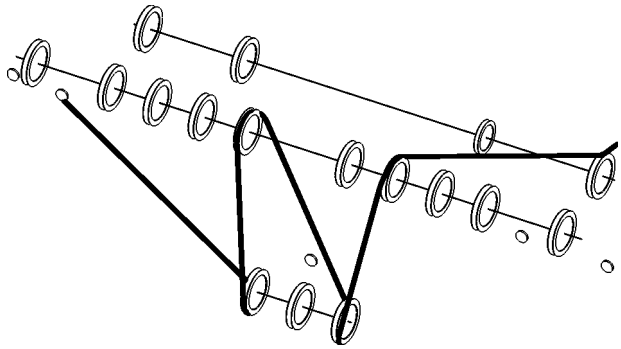 4x	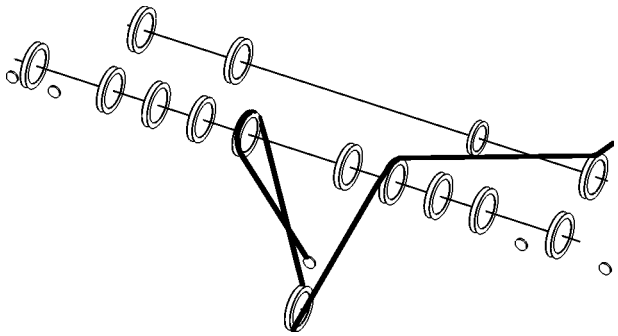 3x
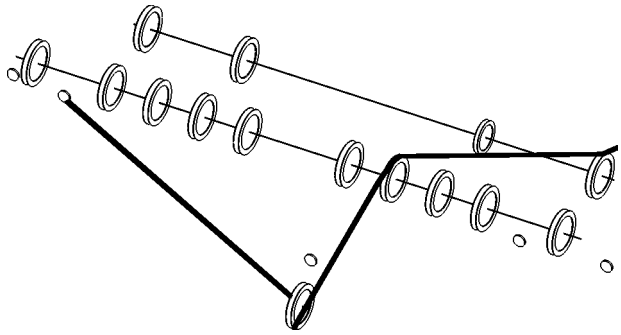 2x	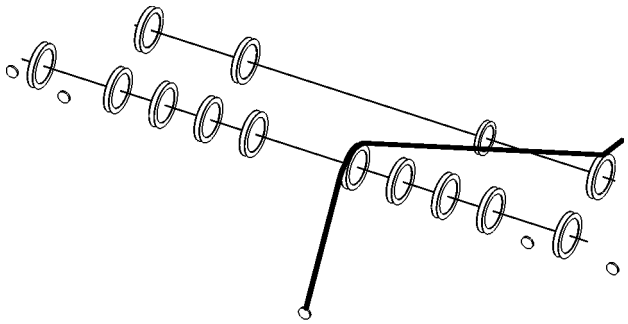 1x

Tab. 551: Reeving diagrams for one rope across main boom head 2821 (load position2)

LWN/LR.x/V03.01//Auslieferung/2015-06-03/en

copyright by
LIEBHERR

7.21.10 Reeving diagrams for one rope across auxiliary jib (15 t (33.000 lb)) on jib head 1916, 1713, 1309, 1008 (load position1)

DANGER
Incorrect number of reevings!
Structural breakdown, toppling of machine.

▶ Choose the correct number of reevings as per the load chart.

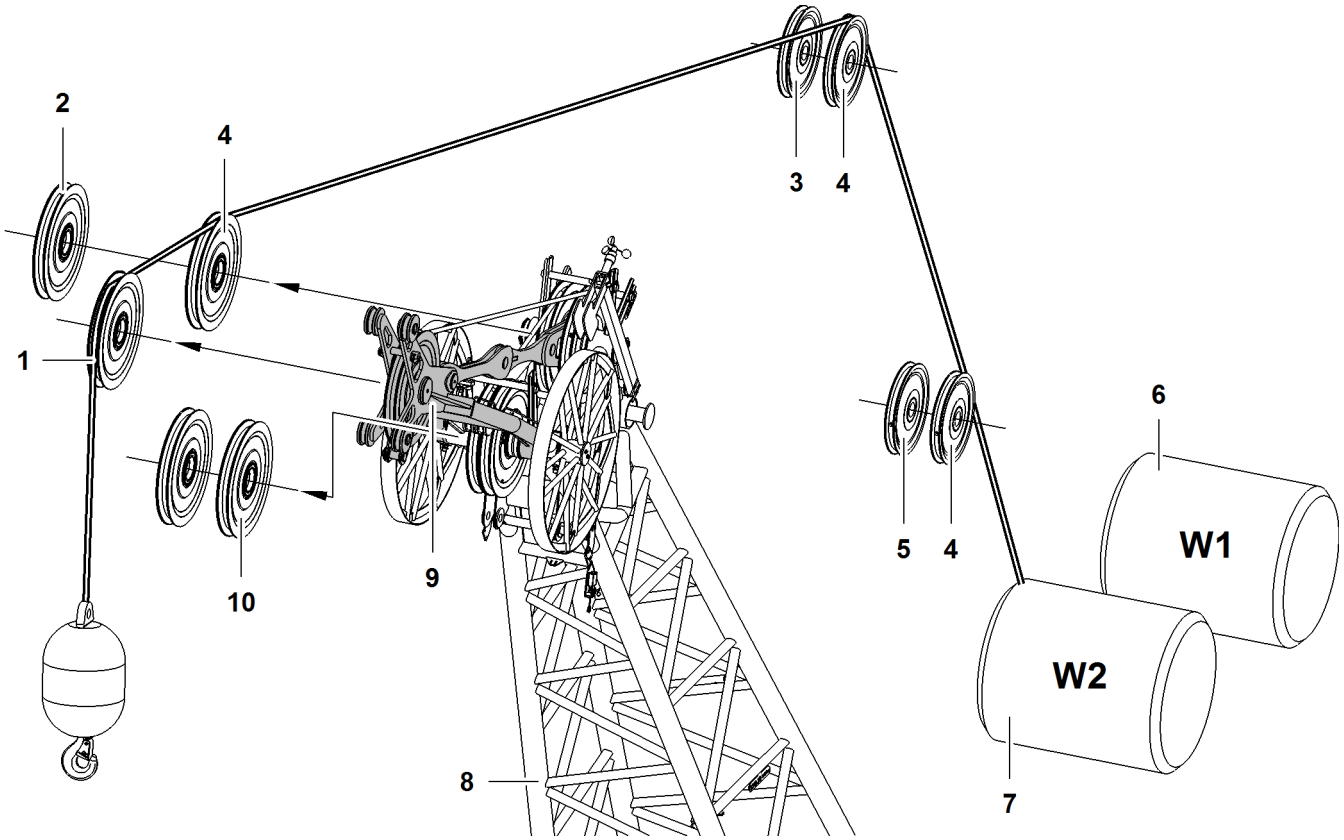

Fig. 5150: Reeving diagrams for one rope across auxiliary jib (15 t (33.000 lb)) on jib head 1916, 1713, 1309, 1008 (load position1) (illustration of principle)

1	Pulley of auxiliary jib (15 t (33.000 lb))	**5**	Pulley of A-frame2	**9**	Auxiliary jib (15 t (33.000 lb))
2	Gantry pulley of jib head	**6**	Winch1	**10**	Pulleys of jib head
3	Pulley of A-frame3	**7**	Winch2		
4	Retrofit kit* for operation with two ropes across jib head	**8**	Jib head		

LWN/LR.x/V03.01//Auslieferung/2015-06-03/en

copyright by LIEBHERR

7.22 Assemble the luffing jib

Ensure that the following conditions are fulfilled:
- ❑ Assembly functions are switched on.
- ❑ The machine is ready for use as an assembly crane, or an assist crane is available.
- ❑ Work plans have been drawn up.
- ❑ The length and the order of the jib sections are known.
- ❑ The assembly positions of the mid-point suspensions are known.
- ❑ Any accessories required are available.

7.22.1 Notes

The assembly of the luffing jib described below applies to all system dimensions of luffing jib.

The illustrations have been simplified or schematically represented for reasons of uniformity and represent the principles of assembly. They do not provide a detailed representation of the components.

7.22.2 Programming the setup

DANGER
Unacceptable setup!

▶ Only program a setup on the machine that is in accordance with the load chart.

▶ Programming the setup on the machine (For more information see: 4.13 Programming the setup, page 870) .

7.22.3 Unloading and positioning the jib components

DANGER
Slewing of uppercarriage with rear counterweight attached not permitted!
Machine toppling over.

▶ Slew the uppercarriage according to the table (For more information see: Lifting and pinning the rear counterweight, page 1224) exclusively.

DANGER
Incorrect or faulty parts/components are fit!
Structural breakdown.

▶ Only use original Liebherr parts/components that are in perfect condition.

DANGER
Improperly assembled boom configuration!
Structural breakdown.

▶ Ensure that the assembled boom configuration is compatible with the programmed setup.

LWN/LR.x/V03.01//Auslieferung/2015-06-03/en

copyright by LIEBHERR

DANGER
Incorrect jib sections arrangement!
Structural breakdown.

- ▶ Assemble the boom according to the relevant system requirements.
- ▶ A jib section measuring 6 m (20 ft) cannot be replaced with two jib sections measuring 3 m (10 ft).
- ▶ A jib section measuring 12 m (40 ft) cannot be replaced with two jib sections measuring 6 m (20 ft).

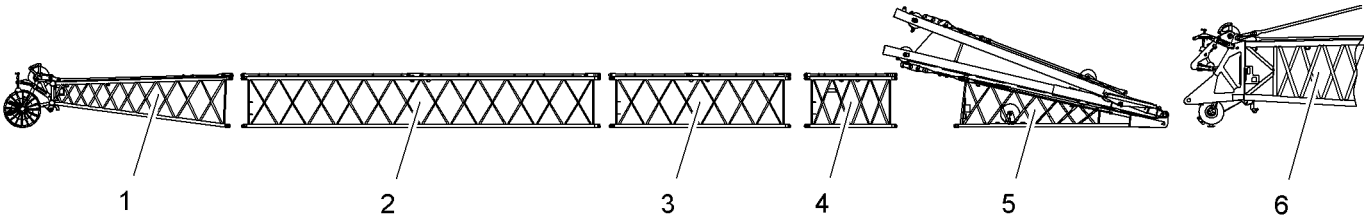

Fig. 5151: Position jib components according to relevant system instructions

1	Jib head section	**3**	Jib section 6 m (20 ft)	**5**	Jib base section
2	Jib section 11.7 m (38 ft) or 12 m (40 ft)	**4**	Jib section 3 m (10 ft)	**6**	Boom head section

- ▶ Direct transport vehicles with boom sections.
- ▶ Sling boom sections by attaching lifting equipment to the lifting points.
- ▶ Unload boom sections using the basic machine or assist crane and position according to the relevant system instructions.

7.22.4 Attaching the auxiliary jib (15 t (33.000 lb)) to the jib head section

NOTICE
Auxiliary jib is attached to an unsuitable jib head section!
Risk of damage to the components.

- ▶ Attach the auxiliary jib (15 t (33.000 lb)) to jib head 1008, 1309, 1713 or 1916 only.

Ensure that the following conditions are fulfilled:
- ❑ Second pulley by A-frame 2 is fitted.
- ❑ Second pulley by A-frame 3 is fitted.
- ❑ The second pulley (gantry pulley) and spacer rings for the jib head section are provided.

LWN/LR.x/V03.01//Auslieferung/2015-06-03/en

copyright by
LIEBHERR

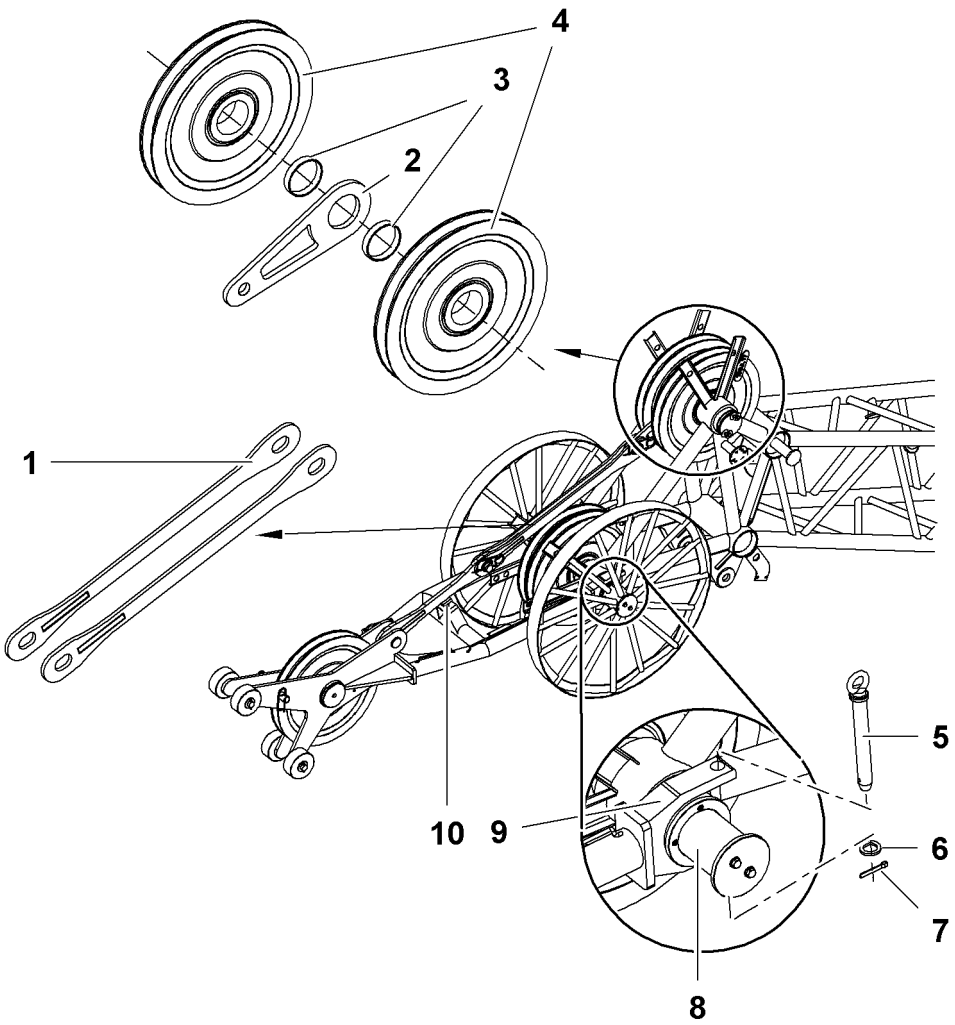

Fig. 5152: Auxiliary jib 15 t (33.000 lb)

1	Connecting link (2x)	**6**	Washer (2x)
2	Connecting link	**7**	Splint (2x)
3	Spacer ring (Ø152 mm (5.98“ in) x Ø141 mm (5.55“ in) x 29 mm (1.14“ in)) (2x)	**8**	Shaft
4	Pulley (2x)	**9**	Fork (2x)
5	Pin (2x)	**10**	Limit stop

Note

Liebherr recommends:
▶ To make it easier to install the auxiliary job: remove the connecting links **1**.

▶ Remove the 4 spacer rings (Ø152 mm (5.98“ in) x Ø141 mm (5.55“ in) x 40 mm (1.57“ in)) by the gantry pulleys from the jib head section.

▶ Fit the connecting link **2** and pulleys **4** with spacer rings **3**.

▶ Lift the auxiliary jib from the front onto the jib head section.

When the forks **9** of the auxiliary jib engage the shaft **8**:
▶ Insert pin **5** and secure with washers **6** and cotter pins **7**.

LWN/LR.x/V03.01//Auslieferung/2015-06-03/en

copyright by
LIEBHERR

- ▶ Fit the connecting links **1**.
- ▶ Set the limit stop **10** so that the connecting links **1** fold upwards when laying down the jib.

7.22.5 Attaching the auxiliary jib (30 t (66.000 lb)) to the jib head section

NOTICE
Auxiliary jib is attached to an unsuitable jib head section!
Risk of damage to the components.

- ▶ Attach the auxiliary jib (30 t (66.000 lb)) to jib head section 2316 only.

Ensure that the following conditions are satisfied:
- ❑ Second pulley by A-frame 2 is fitted.
- ❑ Second pulley by A-frame 3 is fitted.
- ❑ Second pulley (gantry pulley) is equipped with a spacer ring and spacer washers for the jib head section.

LWN/LR.x/V03.01//Auslieferung/2015-06-03/en

copyright by
LIEBHERR

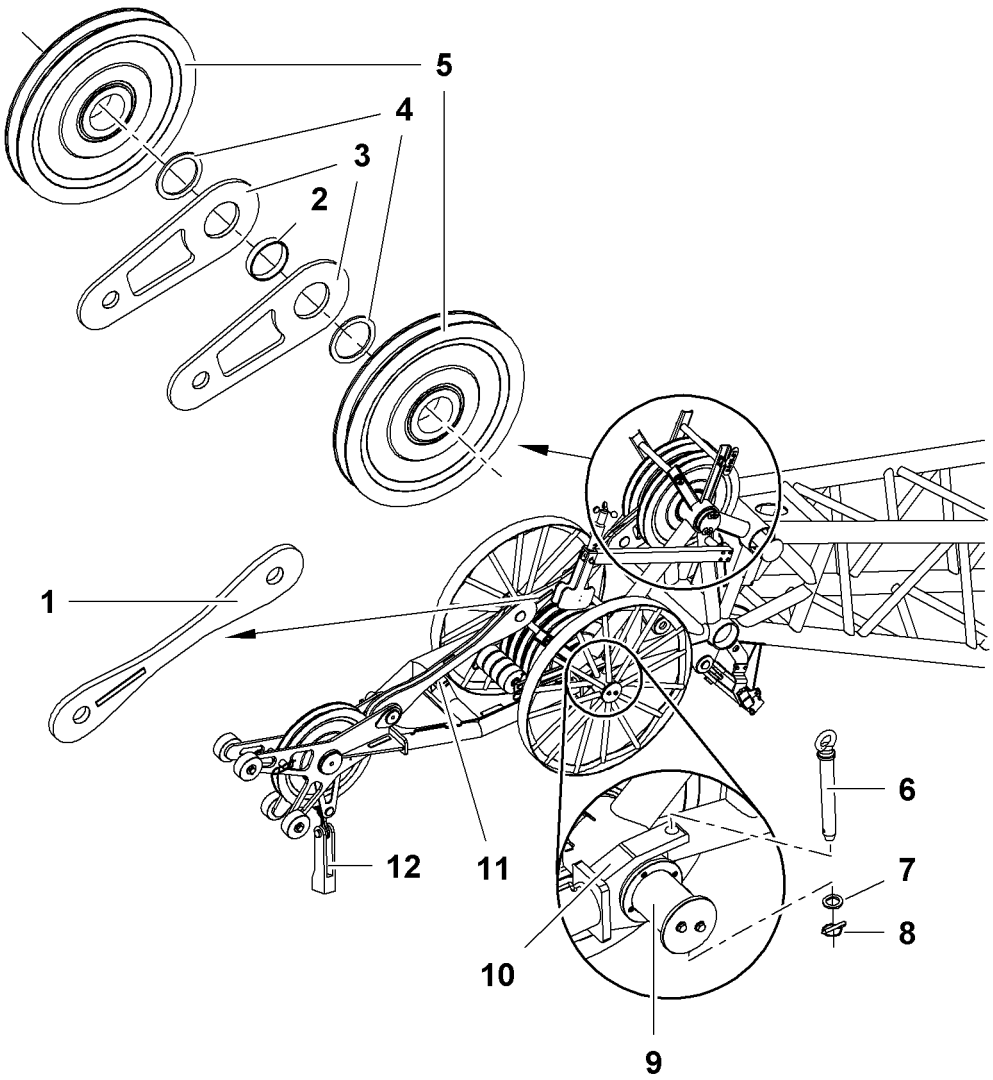

Fig. 5153: Attaching the auxiliary jib (30 t (66.000 lb)) to jib head section 2316

1	Pendant strap	**7**	Washers (2x)
2	Spacer ring (Ø152 mm (5.98“ in) x Ø141 mm (5.55“ in) x 29 mm (1.14“ in))	**8**	Linchpins (2x)
3	Connecting links (2x)	**9**	Shaft
4	Spacer washers (Ø180 mm (7.09“ in) x Ø142 mm (5.59“ in) x 8 mm (0.31“ in)) (2x)	**10**	Forks (2x)
5	Pulleys (2x)	**11**	Limit stop
6	Pins (2x)	**12**	Rope fixation

Note

▶ To make it easier to attach the auxiliary jib: remove the pendant straps **1**.

▶ Remove the 4 spacer rings (Ø160 mm (6.30“ in) x Ø140 mm (5.51“ in) x 40 mm (1.57“ in)) by the gantry pulleys from the jib head section.

▶ Fit the connecting links **3** and pulleys **5** with a spacer ring **2** and spacer washers **4**.

LWN/LR.x/V03.01//Auslieferung/2015-06-03/en

copyright by
LIEBHERR

▶ Lift the auxiliary jib from the front onto the jib head section.

When the forks **10** of the auxiliary jib engage the shaft **9**:
▶ Insert pin **6** and secure with washers **7** and linchpins **8**.

▶ Fit pendant strap **1**.

▶ Set the limit stop **11** so that the pendant strap **1** folds upwards when laying down the jib.

For 2-fold reeving of the auxiliary jib:
▶ Attach the rope fixing point **12**.

7.22.6 Bolting the jib head section to the jib sections

WARNING
Getting caught inside the jib sections during assembly!
Serious injury.

▶ Never go inside the jib sections.

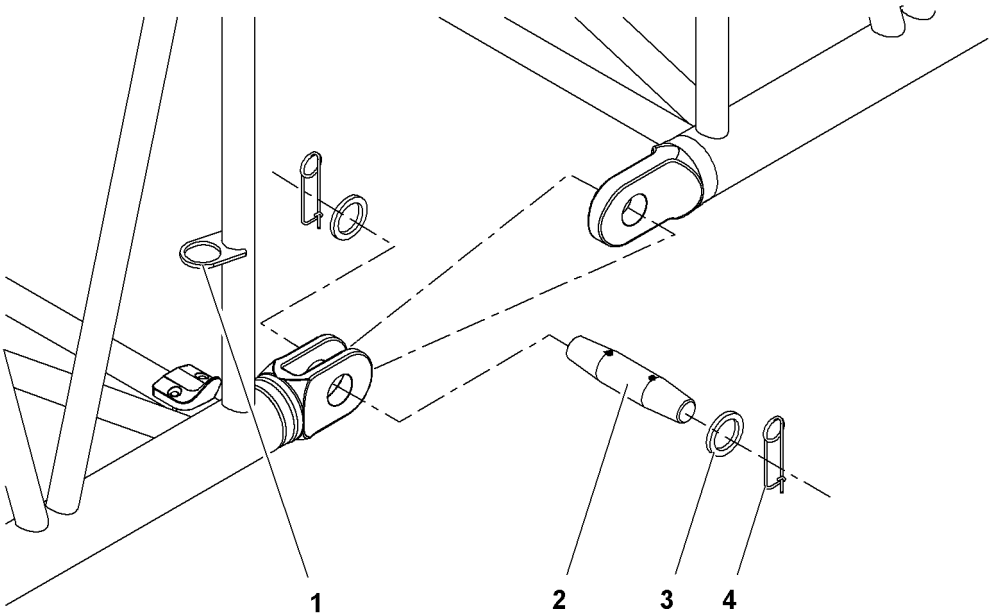

Fig. 5154: Bolting the boom

1	Transport brackets (4x) for double-taper pins	**3**	Washers (8x)
2	Double-taper pins (4x)	**4**	Safety pins (8x)

▶ Remove the double-taper pins **2** from the transport brackets **1**.

Note

▶ To make assembly and disassembly easier: grease the double-taper pin.

▶ Insert double-taper pins **2** and secure with washers **3** and safety pins **4**.

LWN/LR.x/V03.01/Auslieferung/2015-06-03/en

copyright by
LIEBHERR

7.22.7 Attaching the jib base section

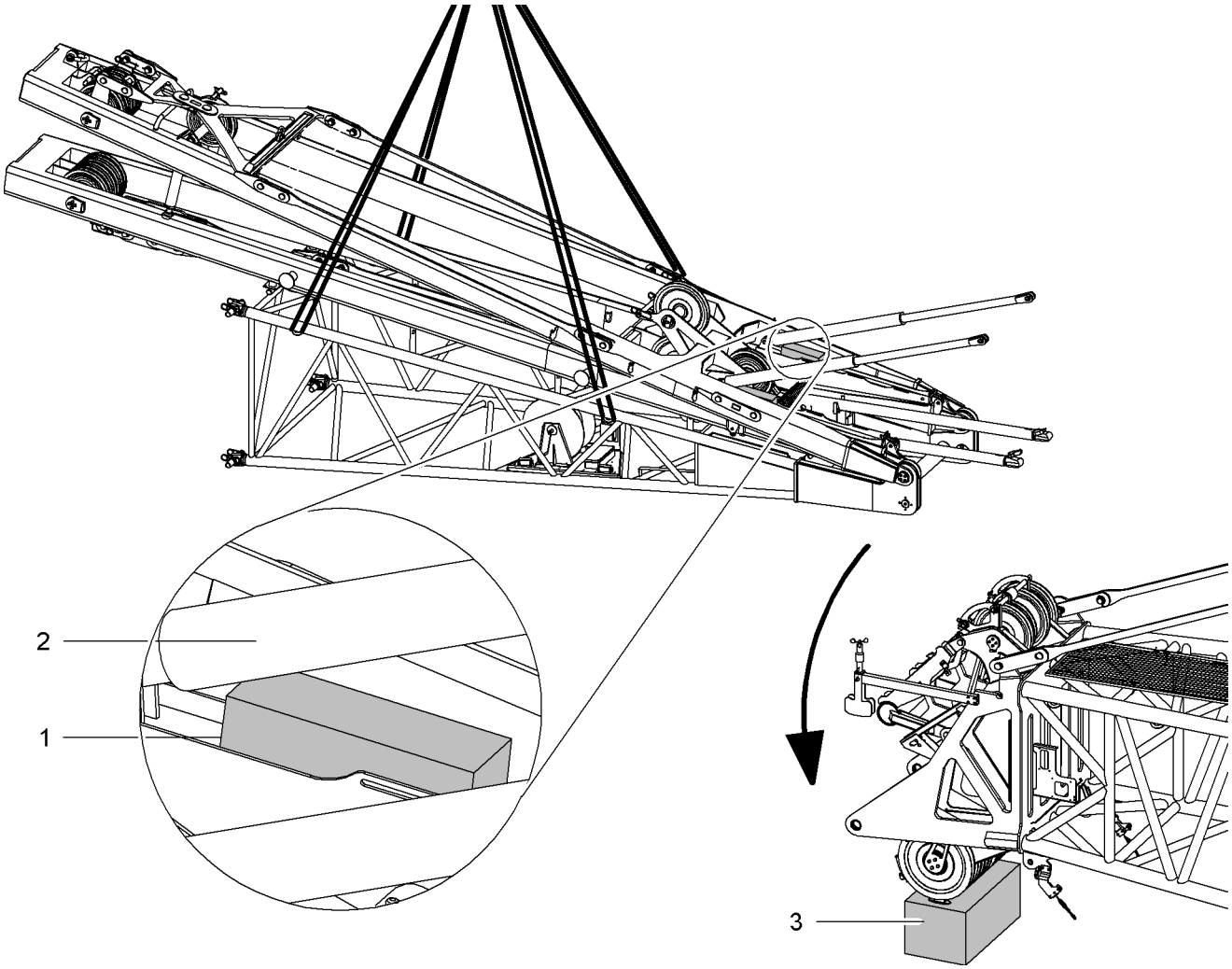

Fig. 5155: Chocking with wooden blocks and lifting the jib base section to the boom head section

1	Wooden block (2x)	**2**	Hydraulic tilting-back support (2x)	**3**	Wooden block

Note

Liebherr recommends:

- ▶ To make it easier to attach the jib base section: chock the feet of the boom head section with a wooden block **3**.
- ▶ Chock the hydraulic tilting-back supports **2** of the luffing jib with wooden blocks **1**.

Note

Special points regarding main boom head 2821.24 (LR 1006)!

- ▶ Fit the guide rails for the hydraulic tilting-back supports to the boom head section in the inner or outer position according to the jib type.

- ▶ Rig jib base section.
- ▶ Lift the jib base section from above onto the boom head section.

LWN/LR.x/V03.01//Auslieferung/2015-06-03/en

copyright by LIEBHERR

▷ Rigid and hydraulic tilting-back supports should be located in the guide rails on the boom head section.

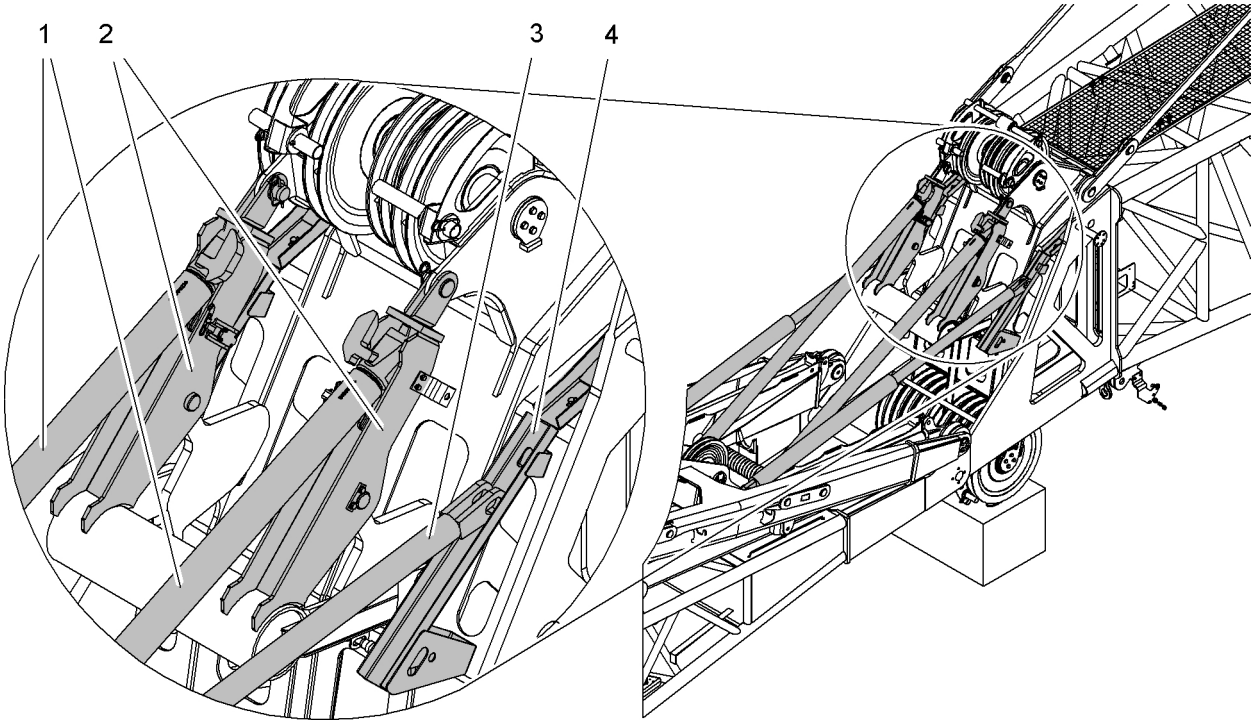

Fig. 5156: Rigid and hydraulic tilting-back supports should be located in the guide rails on the boom head section

1	Rigid tilting-back support (2x)	**3**	Hydraulic tilting-back support (2x)
2	Guide rail (2x) on boom head section for rigid tilting-back supports	**4**	Guide rail (2x) on boom head section for hydraulic tilting-back supports

▶ Lower the jib base section further until the pin connection points of the jib base section and the boom head section line up.

LWN/LR.x/V03.01//Auslieferung/2015-06-03/en

copyright by
LIEBHERR

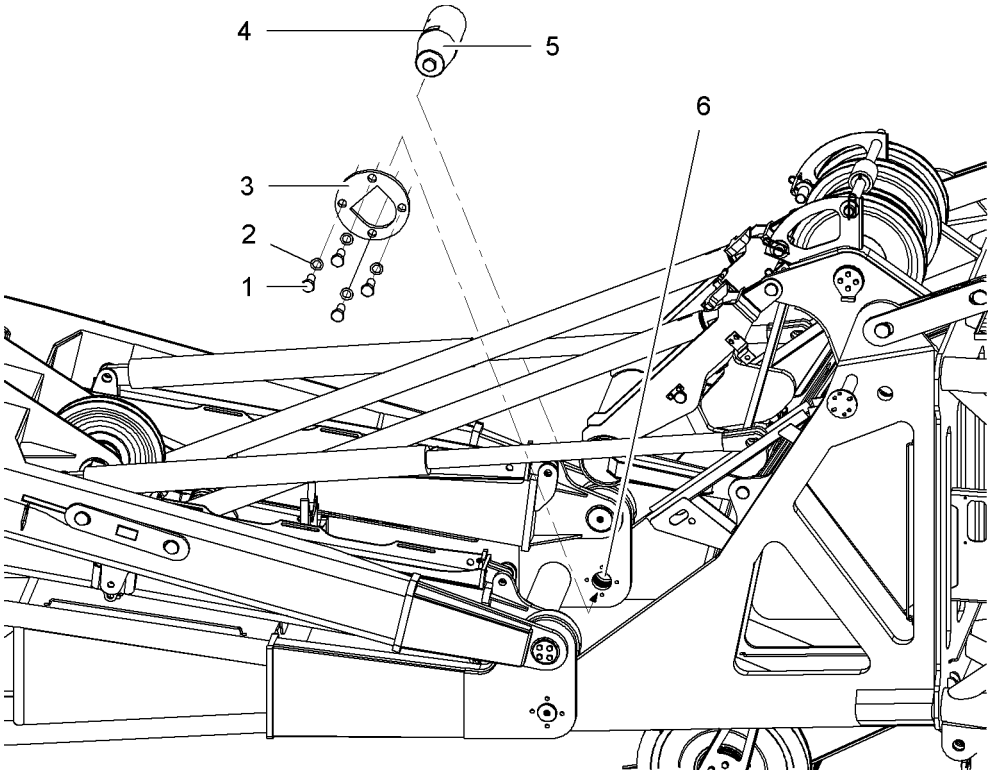

Fig. 5157: Bolting the jib base section to the boom head section

1	Screw (4x)	**4**	Notch
2	Washer (4x)	**5**	Pin
3	Securing element	**6**	Pin connection point (2x)

▶ Lubricate pins **5**.

When the pin connection points **6** of the jib base section and the boom head section line up:
▶ Pin **5** must be driven in from the outside in.

Note

▶ Pay special attention to the position of the notch **4** in the pin **5**.

▶ If necessary, use a screwdriver to turn the pin into the correct position.

▶ Slide the locking element **3** over the pin **5** and place in the notch **4**.

Type of jib	Torque	Screw treatment
2316	239 Nm 176 ft-lb	slightly oiled thread
1916	239 Nm 176 ft-lb	slightly oiled thread
1713	291 Nm 215 ft-lb	grease-free thread and treat with LOCTITE 243
1309	291 Nm 215 ft-lb	grease-free thread and treat with LOCTITE 243

LWN/LR.x/V03.01//Auslieferung/2015-06-03/en

copyright by
LIEBHERR

Type of jib	Torque	Screw treatment
1008	291 Nm 215 ft-lb	grease-free thread and treat with LOCTITE 243

Tab. 552: Torque screws luffing jib

▶ Tighten screws **1** and disks **2** with stated torque.

▶ Repeat the pin insertion process on the opposite side.

7.22.8 Checking the pressure in the accumulator of the hydraulic tilting-back supports

NOTICE
Incorrect pressure in the accumulator of the hydraulic tilting-back supports!
Risk of damage to components.

▶ Ensure that the specified pressure for the current ambient temperature is set in the accumulator.

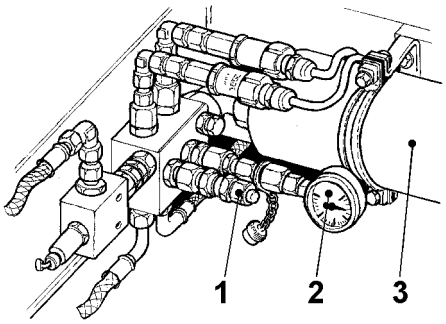

Fig. 5158: Accumulator on A-frame3

1 Connection for filling the accumulator
2 Pressure gauge
3 Accumulator

The table “Specified pressure in accumulator of hydraulic tilting-back supports” is located on A-frame3.

▶ Check pressure in accumulator with tilting-back supports fully extended prior to each assembly.

If the pressure of the accumulator does not match that shown in the table:
▶ Observe ambient temperatures on site and adapt the pressure.

7.22.9 Attaching the main boom (self-assembly system)

Note
Particular approach when using the self-assembly system!

▶ Attach the main boom to the basic machine.

LWN/LR.x/V03.01/Auslieferung/2015-06-03/en

copyright by LIEBHERR

7.22.10 Connect A-frame2 with the rope of winch1/winch2.

WARNING
Unsecured walking on the boom!
risk of falling from the boom.

▶ A fall arrest system must be worn when working on booms to prevent falling.

On A-frame2 and on the crossbar a shackle and a round sling have been fit in the factory.

Ensure that the following conditions are fulfilled:
❑ The shackle and round sling are fitted to A-frame 2.
❑ The shackle and round sling are fitted to the crossbar.
❑ The round sling on A-frame 2 passes through the round sling on the crossbar.

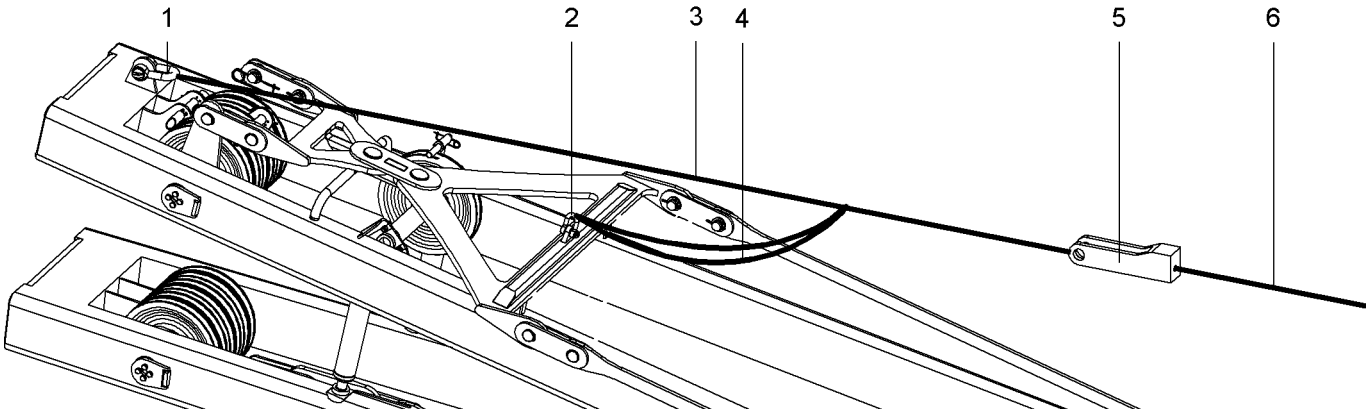

Fig. 5159: Connect A-frame2 with the rope of winch1/winch2.

1	Shackle on A-frame 2	**3**	Round sling on A-frame 2	**5**	Pocket lock
2	Shackle on crossbar	**4**	Round sling on crossbar	**6**	Rope of winch1/winch2

To connect the rope of winch1/winch2 **6** with the round sling, use the pocket lock **5** of the main boom head.

▶ Attach pocket lock **5** to round sling **3** on A-frame2.

▶ Pull rope of winch1/winch2 **6** forward across the main boom up to the pocket lock **5**.

▶ Connect the rope of winch1/winch2 **6** with the pocket lock **5**.

7.22.11 Reeving A-frame 2/A-frame 3

WARNING
Unsecured walking on the boom!
risk of falling from the boom.

▶ A fall arrest system must be worn when working on booms to prevent falling.

WARNING
Luffing jib luffing winch is reeved incorrectly!

▶ Reeve in the rope of the jib luffing winch according to reeving plan.

LWN/LR.x/V03.01//Auslieferung/2015-06-03/en

copyright by
LIEBHERR

The rope reeving plan of the jib luffing rope can be found in the relevant jib instructions.

- ▶ Open up the rope guide, if present.
- ▶ Unwind the rope of the jib luffing winch and pull forward to the jib base section.
- ▶ Connect rope of the jib luffing winch with auxiliary rope reeved in the factory.

Note

- ▶ To make reeving the rope of the jib luffing winch easier: Slightly lift A-frame2 with the rope of winch1/winch2.

- ▶ Pull out the auxiliary rope by hand and at the same time unwind the jib luffing rope.
  or

  Connect the auxiliary rope to the rope of the rope reeving winch and actuate the rope reeving winch.
  ▷ Rope of the jib luffing winch is being reeved.
- ▶ Remove auxiliary rope and place in temporary storage.
- ▶ Attach rope of the jib luffing winch with pocket lock to the rope fixing point of A-frame2.
- ▶ Close and secure the rope guide, if present.

7.22.12 Erecting A-frame2/A-frame3 with rope of winch1/winch2 and bolting the hydraulic tilting-back supports

NOTICE
Luffing jib luffing winch is operated incorrectly!
Damage to A-frame 2 and/or A-frame 3.

If A-frame2 is in the transport position with its feet on A-frame3:
- ▶ Only lower jib luffing winch.

LWN/LR.x/V03.01//Auslieferung/2015-06-03/en

copyright by
LIEBHERR

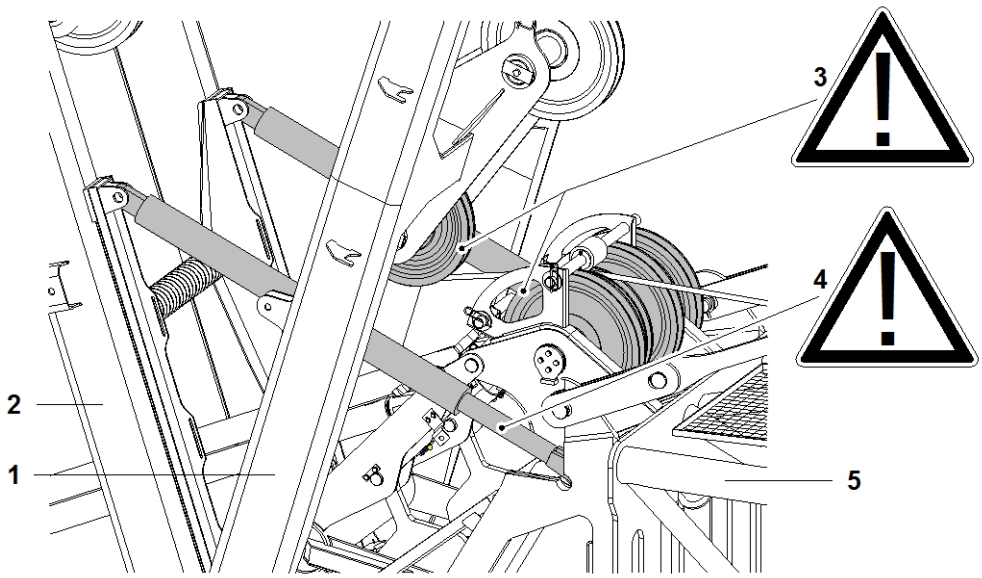

Fig. 5160: Danger points when erecting A-frame 2/A-frame 3

1 A-frame 2

2 A-frame 3

3 Pulley collision point

4 Minimum dimension x of the visible piston rod of the hydraulic tilting-back supports (2x)

5 Boom head section

NOTICE
Pulleys on A-frame2 collide with the gantry pulleys on the main boom!
Damage to machine.

▶ Stop the A-frame 2 erection process in good time.

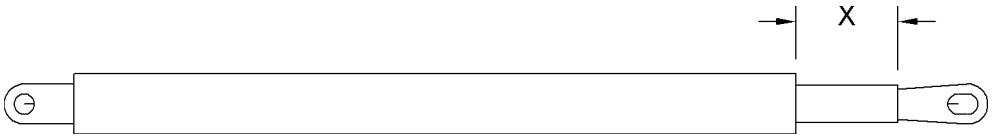

Fig. 5161: Minimum dimension x of the visible piston rod of the hydraulic tilting-back supports

x Minimum dimension
100 mm (3.94“ in)

NOTICE
If the minimum dimension **x** of the visible piston rod of the hydraulic tilting-back supports is not achieved:
Damage to machine.

▶ Stop the A-frame 3 erection process in good time.

▶ Lower A-frame 3 forwards using the jib luffing winch.

Ensure that the following conditions are fulfilled:
❑ A signalman with a walkie-talkie supervises the entire procedure.

LWN/LR.x/V03.01//Auslieferung/2015-06-03/en

copyright by
LIEBHERR

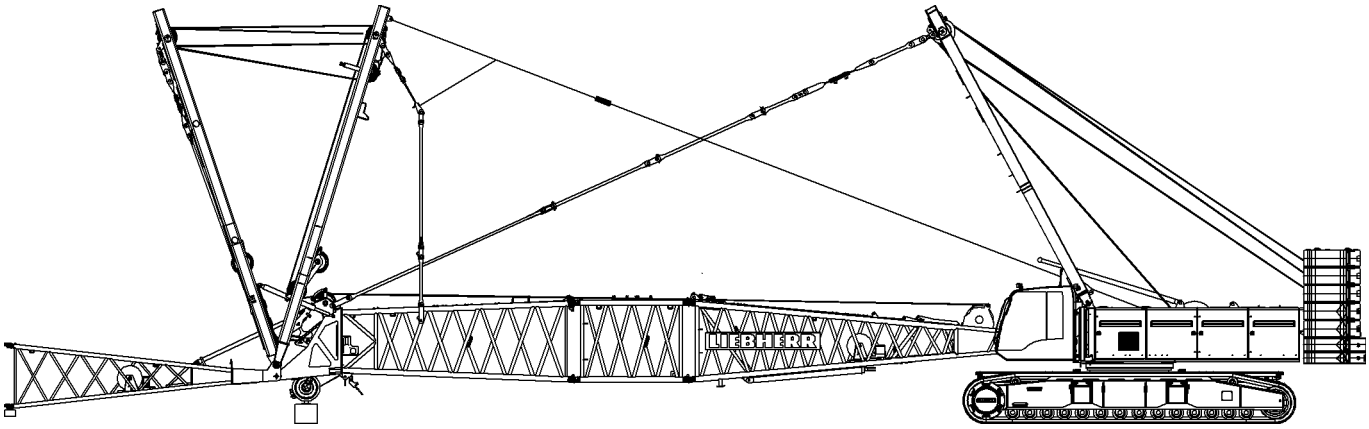

Fig. 5162: Erect A-frame 2/A-frame 3 in the bolting position of the hydraulic tilting-back supports

- ▶ Erect A-frame2 using the rope of winch1/winch2 and lower A-frame3 forwards at the same time if required.
  - ▷ The hydraulic tilting-back supports slide onto the guide rails in the direction of the pin connection points on the boom head section.

If the pin connection points on the hydraulic tilting-back supports match those on the boom head section:

- ▶ Stop the erection process.

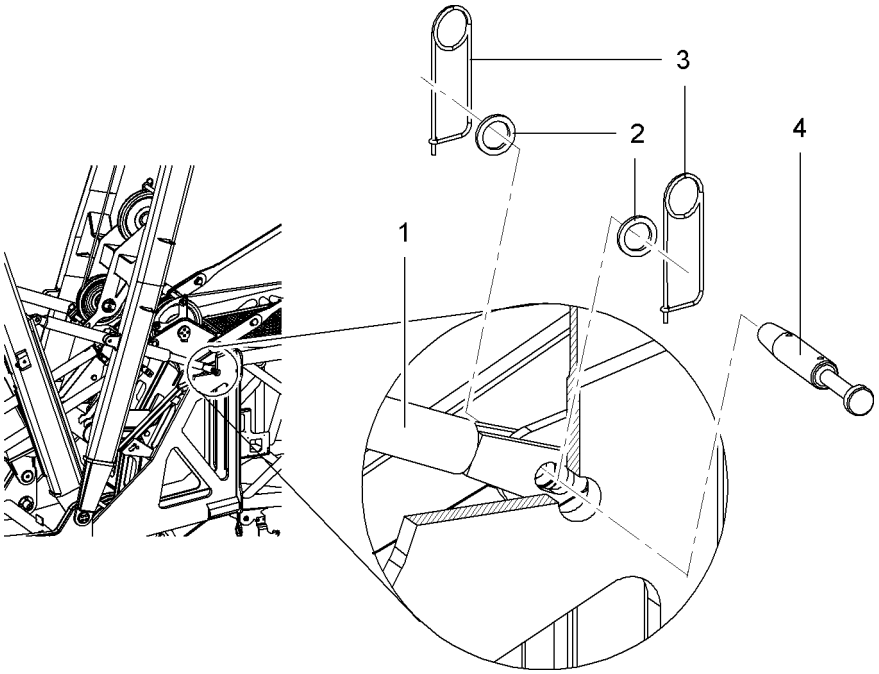

Fig. 5163: Bolting the hydraulic tilting-back supports

1	Hydraulic tilting-back support	**3**	Safety pin (2x)
2	Washer (2x)	**4**	Pin

- ▶ Hydraulic tilting-back support **1** should be bolted with pin **4** and secured with safety pins **3** and washers **2**.
- ▶ Repeat the pin insertion process on the opposite side.

LWN/LR.x/V03.01//Auslieferung/2015-06-03/en

7.22.13 Bolting the equaliser on A-frame 2 to the jib backstay straps

WARNING
Unsecured walking on the boom!
risk of falling from the boom.

▶ A fall arrest system must be worn when working on booms to prevent falling.

Ensure that the following conditions are fulfilled:
❑ A signalman with a walkie-talkie supervises the entire procedure.

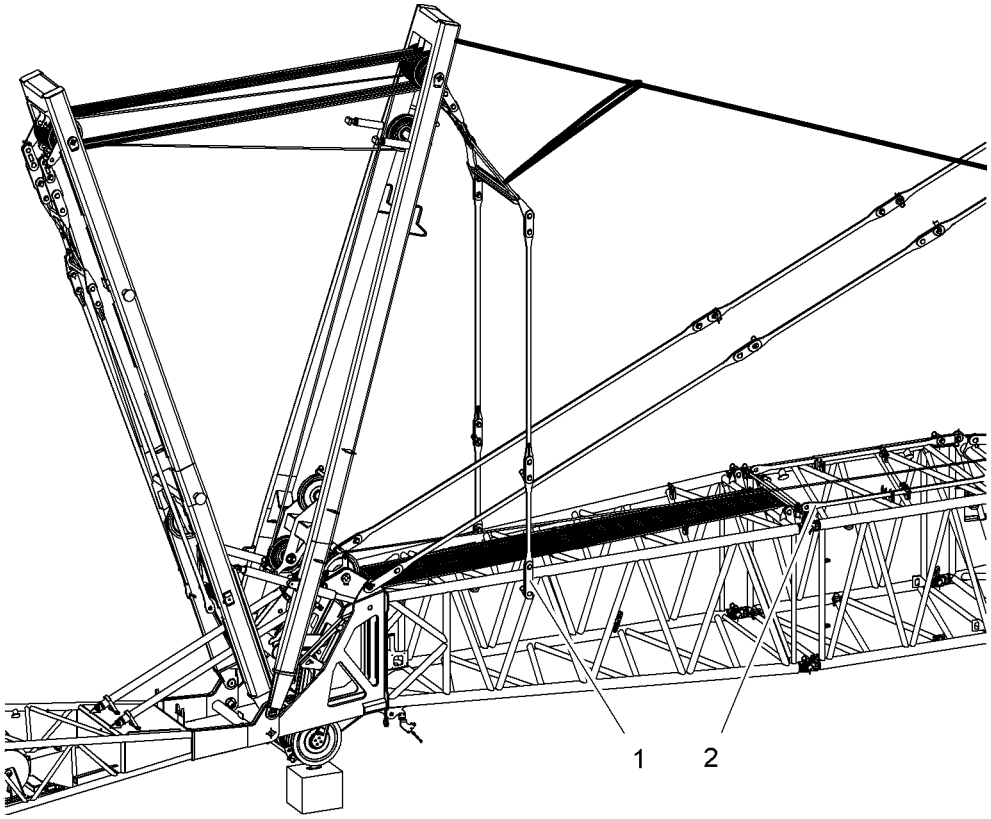

Fig. 5164: Bolting the equaliser on A-frame 2 to the jib backstay straps

1 A-frame 2 equaliser **2** Jib backstay straps on main boom

NOTICE
Not following the procedure correctly!
Damage to A-frame 2 and/or A-frame 3.

▶ Stop the erection process of A-frame2 in good time to avoid a collision with the pulleys on A-frame2 and the gantry pulleys on the boom head section.

▶ Stop the erection process of A-frame 3 in good time so as not to undercut the minimum visible dimension x of the hydraulic tilting-back supports piston rods. If required, lower A-frame 3 forwards.

▶ Erect A-frame2 using the rope of winch1/winch2 and lower A-frame3 forwards at the same time if required.
▷ The equaliser of A-frame 2 moves towards the jib backstay straps.

LWN/LR.x/V03.01//Auslieferung/2015-06-03/en

copyright by LIEBHERR

Before the pulleys on A-frame2 collide with the gantry pulleys on the main boom:

- ▶ Stop the erection process.
- ▶ Bolt the equaliser on A-frame 2 to the jib backstay straps.
- ▶ Unwind rope of winch1/winch2.
- ▶ Remove rope of winch1/winch2 from pocket lock.
- ▶ Remove pocket lock from round sling.

Note

If the rope of winch1 is not reeved onto a hook or a pulley block:

- ▶ Wind up rope of winch1/winch2.

7.22.14 Connecting the equaliser on A-frame 3 to the jib base section

To bolt the jib base section to the jib, the jib base section is fastened to the equaliser of A-frame 3 with round slings. The jib base section can then be erected and moved up to the jib.

Note

Special procedure when using an assist crane!

- ▶ Lift the jib base section using an assist crane.

NOTICE

Not following the procedure correctly!
Damage to A-frame 3

- ▶ Stop the erection process of A-frame 3 in good time so as not to undercut the minimum visible dimension x of the hydraulic tilting-back supports piston rods. If required, lower A-frame 3 forwards.

Ensure that the following conditions are fulfilled:

- ❑ Approved sling gear is available (For more information see: 6.9 Rigging equipment and/or sling gear, page 1100) .
- ❑ A signalman with a walkie-talkie should supervise the entire procedure.

LWN/LR.x/V03.01//Auslieferung/2015-06-03/en

copyright by
LIEBHERR

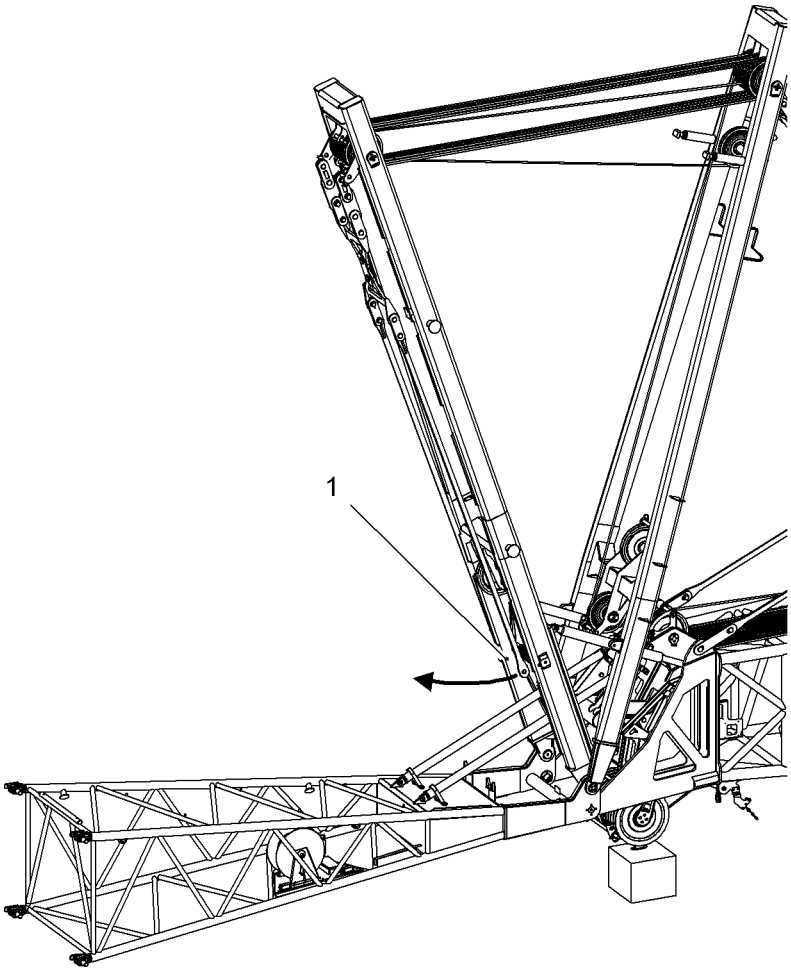

Fig. 5165: Removing the equaliser of A-frame 3 from the transport bracket

1 Transport brackets (2x) of the equalizer of A-frame3

CAUTION
A-frame 3 equaliser swinging down!

- ▶ Move A-frame 3 into a steep position using the jib luffing winch.
- ▶ Leave the swing range of the equaliser of A-frame 3.

- ▶ Undo the safety pin and remove the equaliser of A-frame 3 from the transport bracket **1**.
  - ▷ The equaliser of A-frame 3 swings downwards.

LWN/LR.x/V03.01//Auslieferung/2015-06-03/en

copyright by LIEBHERR

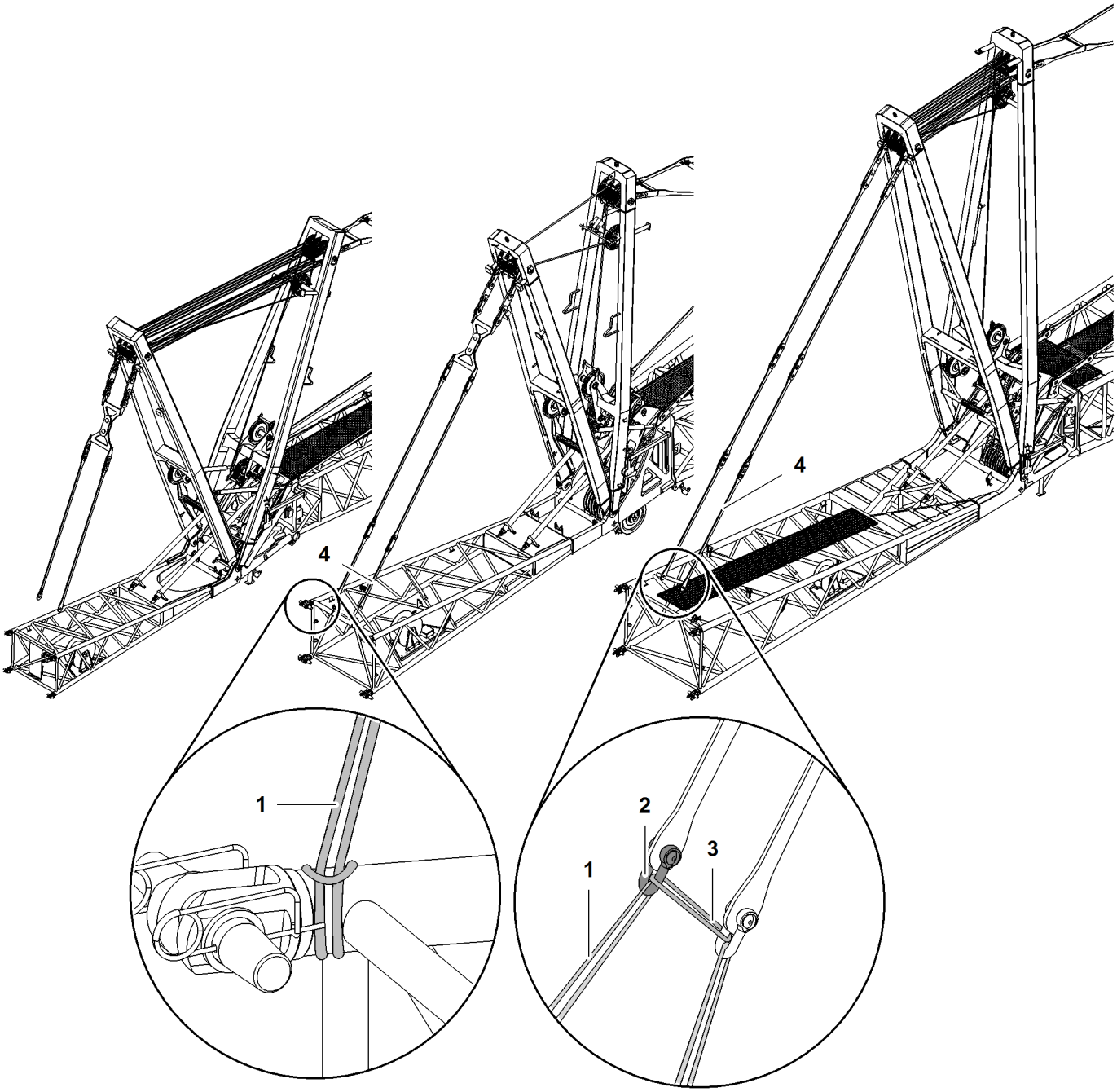

Fig. 5166: Connecting the equalizer on A-frame3 to the jib base section

1 Round sling 1.5 m (4‘ 11“ ft-in)
2 Shackle (2x)
3 Round sling 0.5 m (1‘ 8“ ft-in)
4 Jib pendant strap of jib base section

Depending on the jib type, the equalizer of A-frame3 must be extended with a jib pendant strap **4** of the jib base section.

▶ Connect the equaliser of A-frame 3 to the jib base section as shown in the diagram.

7.22.15 Bolting the jib base section to the jib

▶ Wind up jib luffing winch.

LWN/LR.x/V03.01//Auslieferung/2015-06-03/en

copyright by LIEBHERR

▷ The jib base section lifts off the ground.

▶ Raise the main boom with attached jib base section.

▶ Move the machine forwards to enable pinning of the jib base section with the jib.

Once the pin connection points of the jib base section and the first jib section align:
▶ Bolt the jib base section to the jib.

7.22.16 Bolting the equaliser on A-frame 3 to the jib pendant straps

WARNING
Unsecured walking on the boom!
risk of falling from the boom.

▶ A fall arrest system must be worn when working on booms to prevent falling.

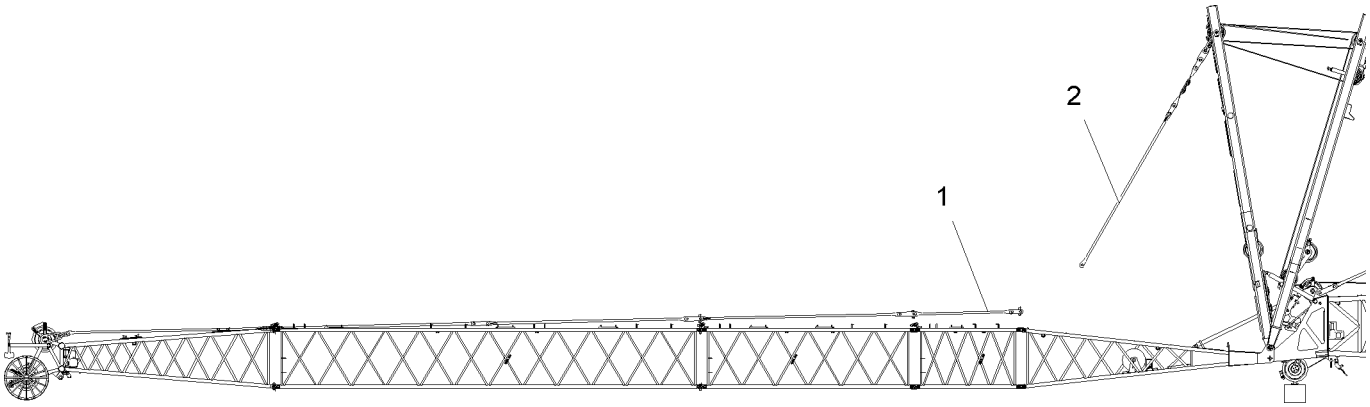

Fig. 5167: Bolting the equaliser on A-frame 3 to the jib pendant straps

1 Jib pendant straps **2** A-frame 3 equaliser

▶ Lower A-frame 3 forwards using the jib luffing winch.
▷ The equaliser of A-frame 3 moves towards the jib.

If the shackles can be reached by hand:
▶ Stop the lowering process.

▶ Remove the shackles and round slings from the equaliser of A-frame 3 and store in a safe place.

▶ Continue lowering A-frame 3 forwards using the jib luffing winch.

If the equaliser of A-frame 3 can be bolted to the jib pendant straps:
▶ Stop the lowering process.

▶ Bolt the equaliser on A-frame 3 to the jib pendant straps.

7.22.17 Installing mid-point suspension

The lengths of the stay ropes and their assembly positions are shown in the relevant instructions for the boom.

DANGER
Incorrect installation of mid-point suspensions!
Structural breakdown.

▶ Fit mid-point suspensions according to relevant system instructions.

LWN/LR.x/V03.01//Auslieferung/2015-06-03/en

copyright by LIEBHERR

- ▶ Assemble required length of stay ropes in line with system-relevant details.
- ▶ Remove the safety pins and washers from both sides of the boom pin connection double-taper pin and stow away.
- ▶ Repeat procedure on opposite side.

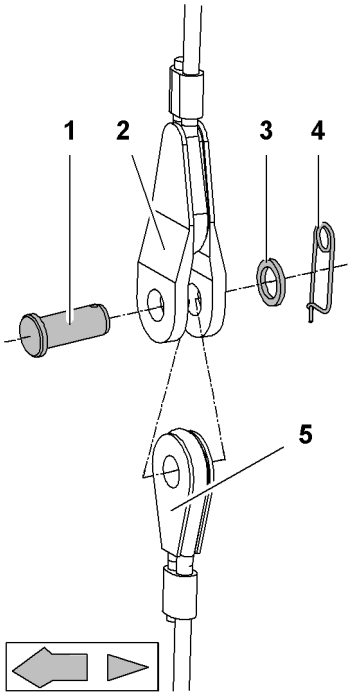

Fig. 5168: Pinning mid-point suspension stay ropes

1	Pin	**4**	Safety pin
2	Top stay rope	**5**	Bottom stay rope
3	Washer		

- ▶ Pin top stay rope **2** to bottom stay rope **5**.
- ▶ Secure the pin **1** with washer **3** and retaining spring **4**.

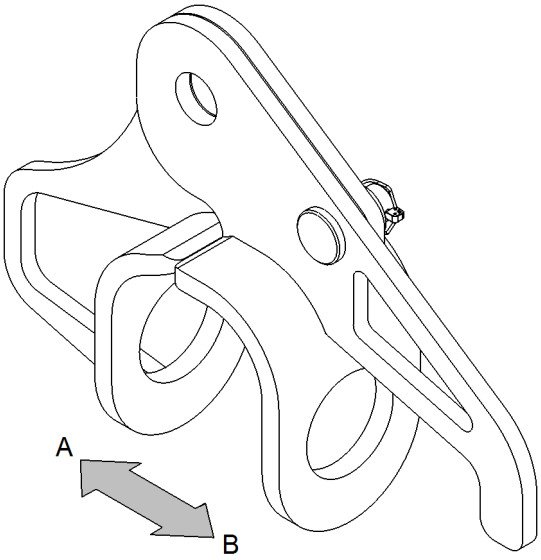

Fig. 5169: Mid-point suspension forks

A	Jib interior	**B**	Jib exterior

LWN/LR.x/V03.01//Auslieferung/2015-06-03/en

The forks may have different shapes. The permissible shape depends on the boom configuration (For more information see: 1 Product description, page 49) .

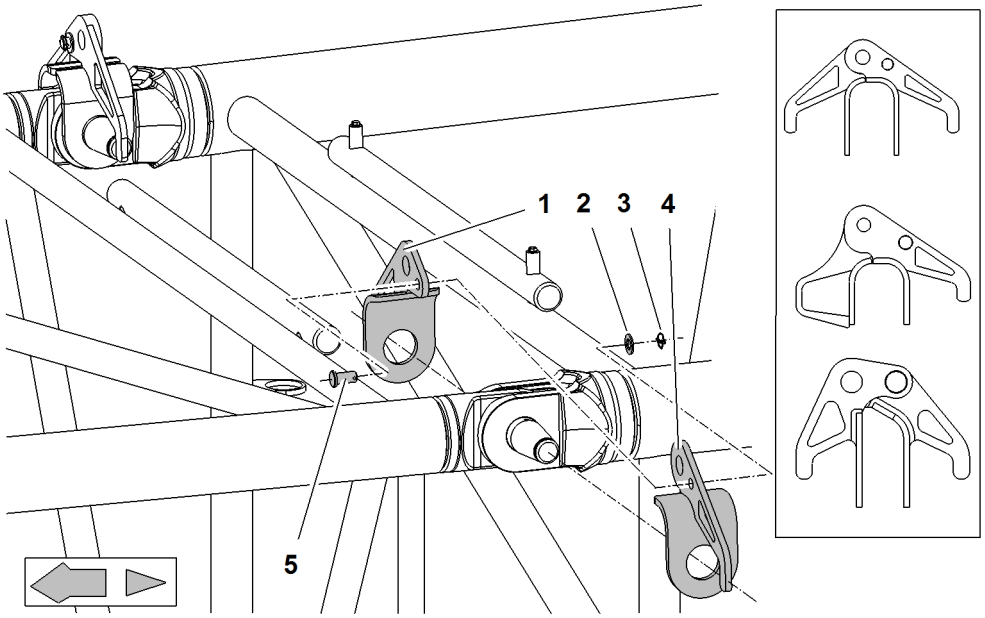

Fig. 5170: Assembling the mid-point suspension forks

1	Inner section of fork	**4**	Outer section of fork
2	Washer	**5**	Pin
3	Linch pin		

- ▶ Mount inner section of fork **1** on double-taper pin.
- ▶ Mount outer section of fork **4** on double-taper pin.
- ▶ Pin inner section of fork **1** to outer section of fork **4**.
- ▶ Secure pin **5** with a washer **2** and linch pin **3**.
- ▶ Repeat procedure on opposite side.

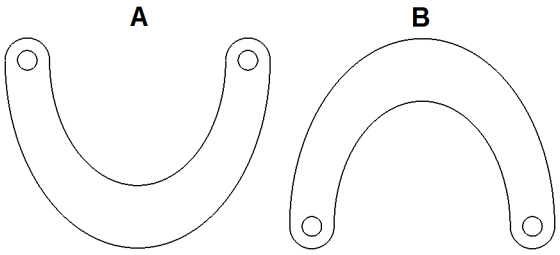

Fig. 5171: Installation position of spacer bracket with mid-point suspension on luffing jib 2316 and 1916

A	Spacer bracket down	**B**	Spacer bracket up

Install spacer bracket **6** of mid-point suspension on luffing jibs 2316 and 1916 in installation position spacer bracket **B up**.

LWN/LR.x/V03.01//Auslieferung/2015-06-03/en

copyright by
LIEBHERR

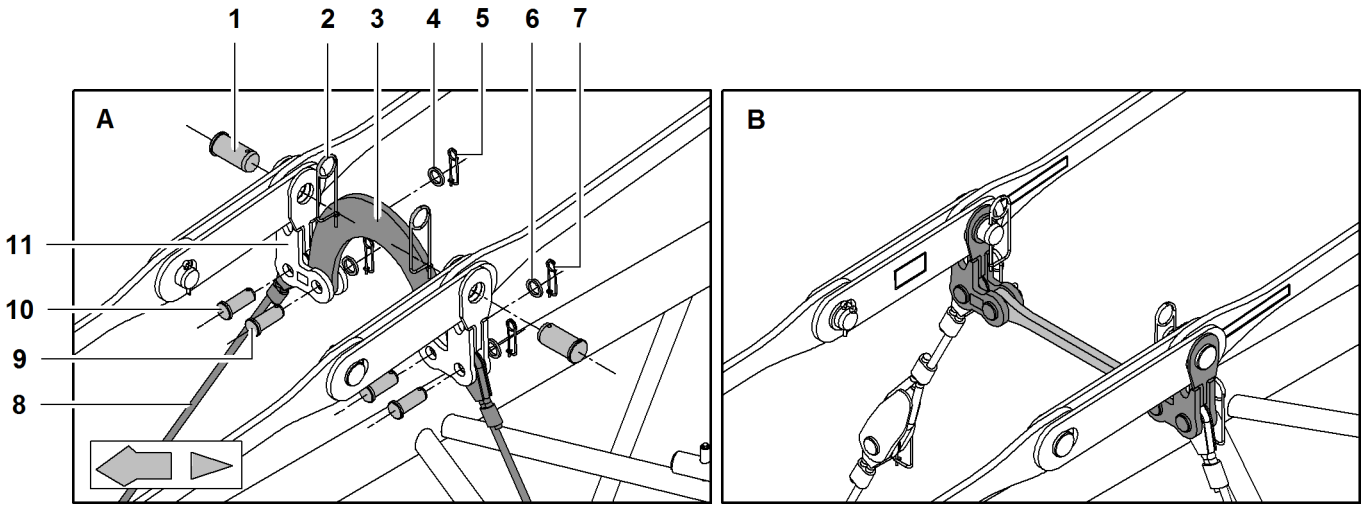

Fig. 5172: Installing the pendant straps, spacer bracket, connecting elements and mid-point suspension stay ropes

1	Pin (2x) for pendant straps	**6**	Washer (2x)	**11**	Connecting element (2x)
2	Locking spring (2x)	**7**	Locking spring (2x)	**A**	Mid-point suspension on luffing jib 2316 and 1916
3	Spacer bracket	**8**	Stay ropes	**B**	Mid-point suspension on luffing jib 1713, 1309 and 1008
4	Washer (2x)	**9**	Pin (2x) for spacer bracket		
5	Locking spring (2x)	**10**	Pin (2x) for stay ropes		

Installation of the mid-point suspension on luffing jib 2316, 1916, 1713, 1309 and 1008 is identical. Only the spacer brackets are different.

▶ Pin connecting elements **11** to pendant straps.

▶ Secure pin **1** with locking springs **2**.

NOTICE
Inadmissible run of winch1/winch2 rope on luffing jib 2316 and 1916!
Damage to winch1/winch2 rope.

▶ Ensure that winch1/winch2 rope runs underneath spacer bracket **3**.

▶ Pin connecting elements **11** to spacer bracket **3**.

▶ Secure pin **9** with washers **6** and locking springs **7**.

▶ Pin connecting elements **11** to stay ropes **8**.

▶ Secure pin **10** with washers **4** and locking springs **5**.

LWN/LR.x/V03.01//Auslieferung/2015-06-03/en

copyright by
LIEBHERR

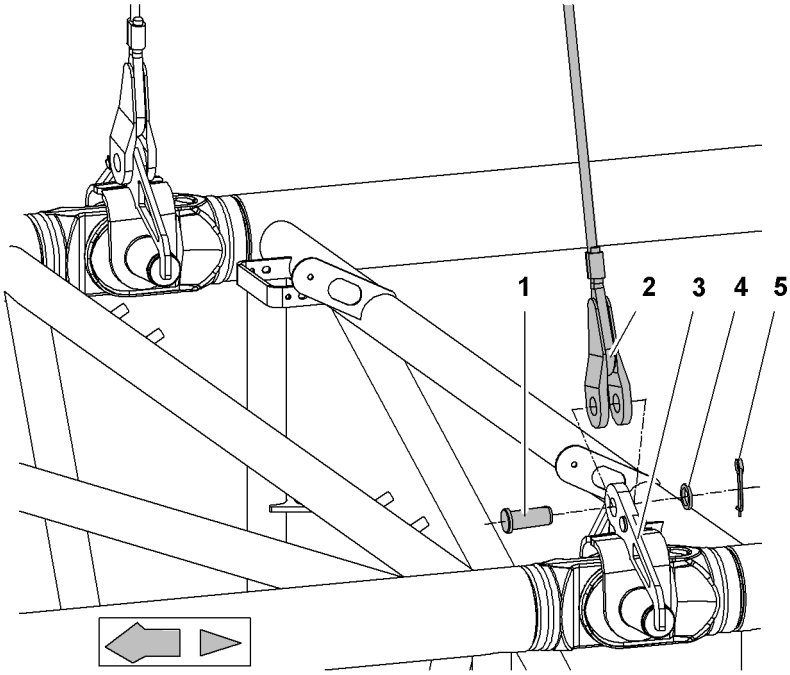

Fig. 5173: Pinning stay ropes to forks of mid-point suspension

1	Pin	**4**	Washer
2	Stay rope	**5**	Safety pin
3	Fork		

Note

▶ To facilitate pinning stay ropes **2** and forks **3**: Use A-frame1 to lift pendant straps.

▶ Pin stay rope **2** to fork **3**.

▶ Secure the pin **1** with washer **4** and retaining spring **5**.

▶ Repeat procedure on opposite side.

7.22.18 Pinning the pendant straps

▶ Remove safety pins from the transport brackets for pendant straps.

LWN/LR.x/V03.01//Auslieferung/2015-06-03/en

copyright by
LIEBHERR

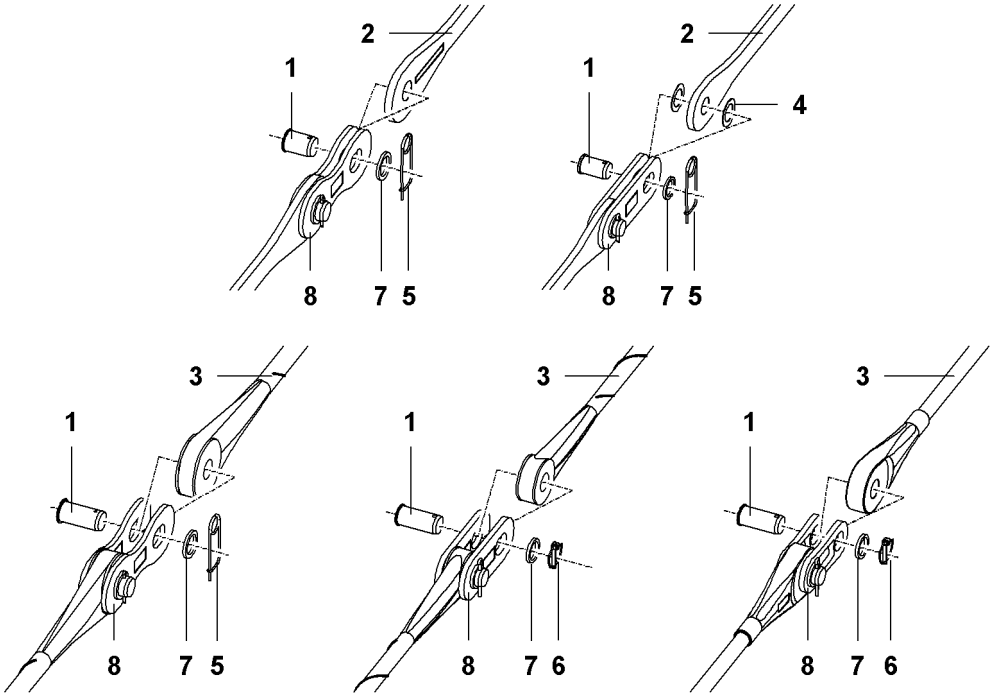

Fig. 5174: Bolt the pendant straps (schematic diagram of various pendant straps)

1	Pin	**5**	Safety pin
2	Steel pendant strap	**6**	Linch pin
3	Carbon-fibre pendant strap	**7**	Washer
4	Plastic washer (2x)	**8**	Connecting link

▶ Remove the pin **1** on the connecting link **8**.

▶ Position the pendant strap **2, 3** between the two coupling links **8**.
or

If the pendant strap has plastic washers **4**:
Position the pendant strap **2** with plastic washers **4** on both sides between the two connecting links **8**.

▶ Insert pin **1** and secure with washers **7** and safety pin **5** or linch pin **6**.

7.22.19 Connect the electric cables

NOTICE
Electric cables have been handled incorrectly!
Damage to electric cable and plug.

▶ Do not pull the electric cable over sharp-edged objects.

▶ Do not crush or kink the electric cable.

▶ Keep the plug clean.

▶ Disconnect the electric cable from the dummy receptacle on the jib base section.

▶ Connect the electric cable to the terminal box on the main boom head section and secure using retaining clips.
▷ The boom head section and jib base section electric cables are connected.

The electric cable to the jib head section is rolled on the cable drum on the jib base section.

LWN/LR.x/V03.01//Auslieferung/2015-06-03/en

▶ Disconnect both electric cables from the terminal box on the jib base section.

NOTICE
Electric cable has been unwound incorrectly!
Electric cable may be damaged.

▶ Push the electric cable in the cable drum into the side opening of the cable drum.

▶ Loosen the pin on the axle of the cable drum.

▶ Unwind the electric cables from the cable drum and pull it inside the jib to the jib head section.

▶ Connect the electric cable to the terminal box on the jib head section and secure using retaining clips.

Two fixing holes are provided under the terminal box to relieve the strain on the plug.

▶ Clip both carabiners on the cable sock into the fixing holes.

▶ Fix the pin on the axle of the cable drum.

▶ Reconnect the electric cable in the cable drum to the terminal box on the jib base section.
▷ The jib base section and jib head section electric cables are connected.

If an auxiliary jib is fitted:
▶ Plug the auxiliary jib electric cable into the jib head section.

7.22.20 Installing the obstacle warning light

Note
Use of the obstacle warning light is prescribed by national or regional regulations!

▶ Before using the machine, familiarise yourself with national and local regulations.

Ensure that the following conditions are fulfilled:
❑ Anemometer is not installed.

LWN/LR.x/V03.01//Auslieferung/2015-06-03/en

copyright by
LIEBHERR

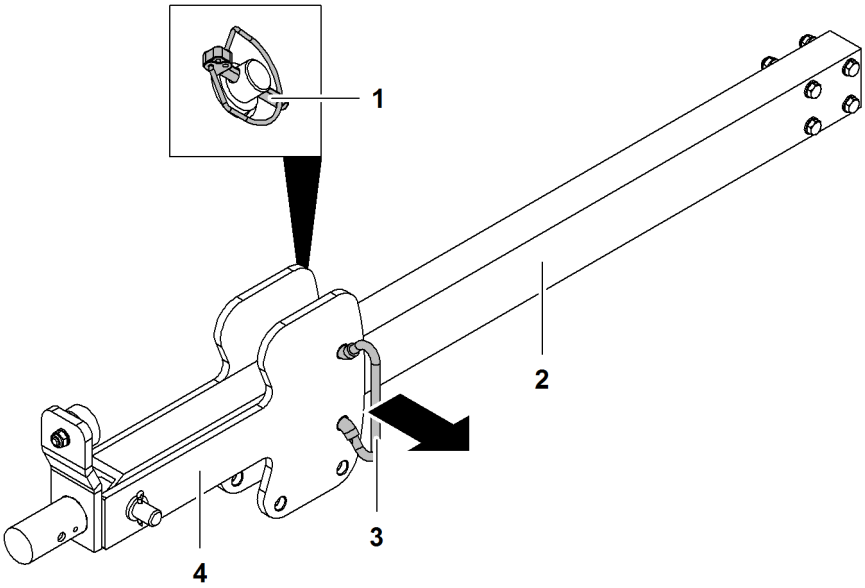

Fig. 5175: Moving the pendulum into the working position

1	Linchpins (2x)	**3**	Locking element
2	Mount	**4**	Pendulum

The pendulum **4** is secured on the mount **2** for machine transport.

▶ Remove the linchpin **1** of the locking element **3**.

▶ Remove **3** locking element.

▶ Swing pendulum **4** down.

▶ Slide locking element **3** through pendulum **4** and secure with linchpins **1**.

LWN/LR.x/V03.01//Auslieferung/2015-06-03/en

copyright by
LIEBHERR

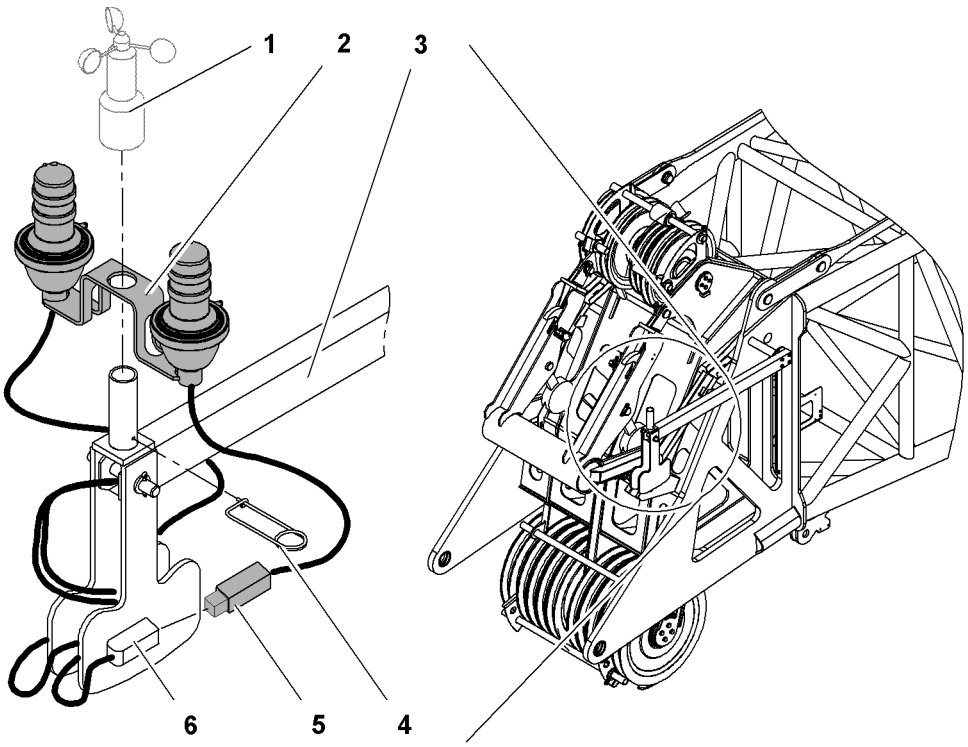

Fig. 5176: Installing the obstacle warning light

1	Anemometer	**4**	Safety pin
2	Obstacle warning light	**5**	Plug
3	Mount	**6**	Coupling

▶ Place obstacle warning light **2** on pipe.
  ▷ Obstacle warning light is secured by the pipe and axis on the bracket **3**.

NOTICE
Safety pin is not fit properly!
Damage to the electric cable.

▶ Insert the safety pin carefully.

▶ Insert the safety pin **4**.
  ▷ Obstacle warning light **2** is secured.

▶ Connect the plug **5** to the coupling **6**.

▶ Lock plug **5**.

7.22.21 Fitting the anemometer

Ensure that the following conditions are fulfilled:

❑ Obstacle warning light is installed (if available).

LWN/LR.x/V03.01//Auslieferung/2015-06-03/en

copyright by
LIEBHERR

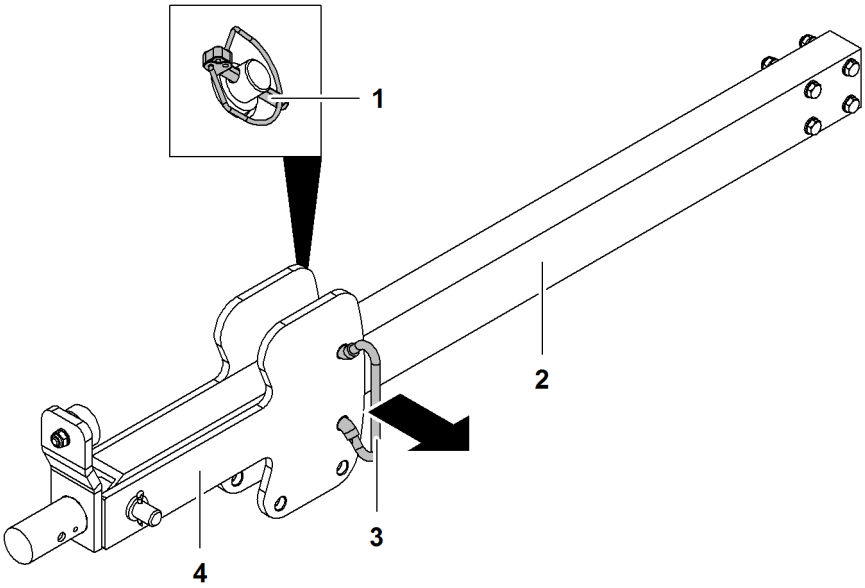

Fig. 5177: Moving the pendulum into the working position

1	Linchpins (2x)	**3**	Locking element
2	Mount	**4**	Pendulum

The pendulum **4** is secured on the mount **2** for machine transport.

▶ Remove the linchpin **1** of the locking element **3**.

▶ Remove **3** locking element.

▶ Swing pendulum **4** down.

▶ Slide locking element **3** through pendulum **4** and secure with linchpins **1**.

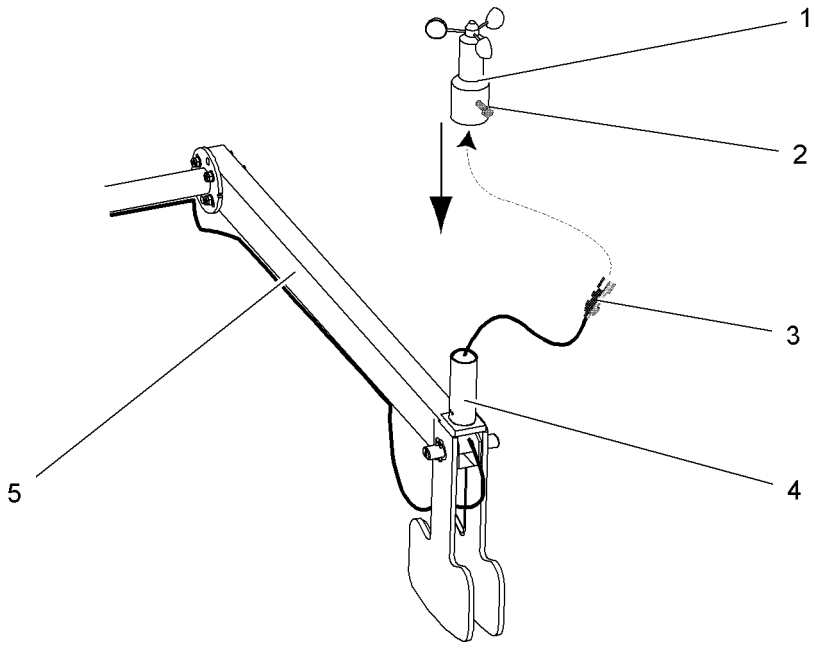

Fig. 5178: Fitting the anemometer

1	Anemometer	**4**	Tube
2	Screw	**5**	Mount
3	Plug		

LWN/LR.x/V03.01//Auslieferung/2015-06-03/en

- Remove cover from the plug **3**.
- Plug in the connector **3** at the bottom of the anemometer **1**.
- Secure plug **3** with nut.

NOTICE
Anemometer is not fit properly!
Damage to the electric cable.

- Pull the extended electric cable through the tube before pushing on the anemometer.

- Position the anemometer **1** on the tube **4**.
- Securing the anemometer on the mount: Tighten the screw **2**.

The rotor of the anemometer must be free to rotate slightly.

- Test the anemometer: rotate the rotor slightly and note the value on the monitor.
  - ▷ The wind speed value will increase.

7.22.22 Moving the lightning rods* into working position

Installation position of lightning rods on luffing jib

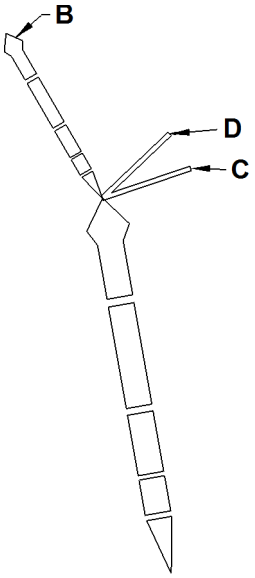

Fig. 5179: Installation position of lightning rods on luffing jib

B Luffing jib head
C A-frame2
D A-frame3

Boom configuration	Number of lightning rods	Installation positions
Main boom + luffing jib	3	B + C + D
Main boom + luffing jib + midfall	3	B + C + D

Tab. 553: Installation position and number of lightning rods on luffing jib

LWN/LR.x/V03.01//Auslieferung/2015-06-03/en

copyright by LIEBHERR

Moving the lightning rods* on the luffing jib head into working position

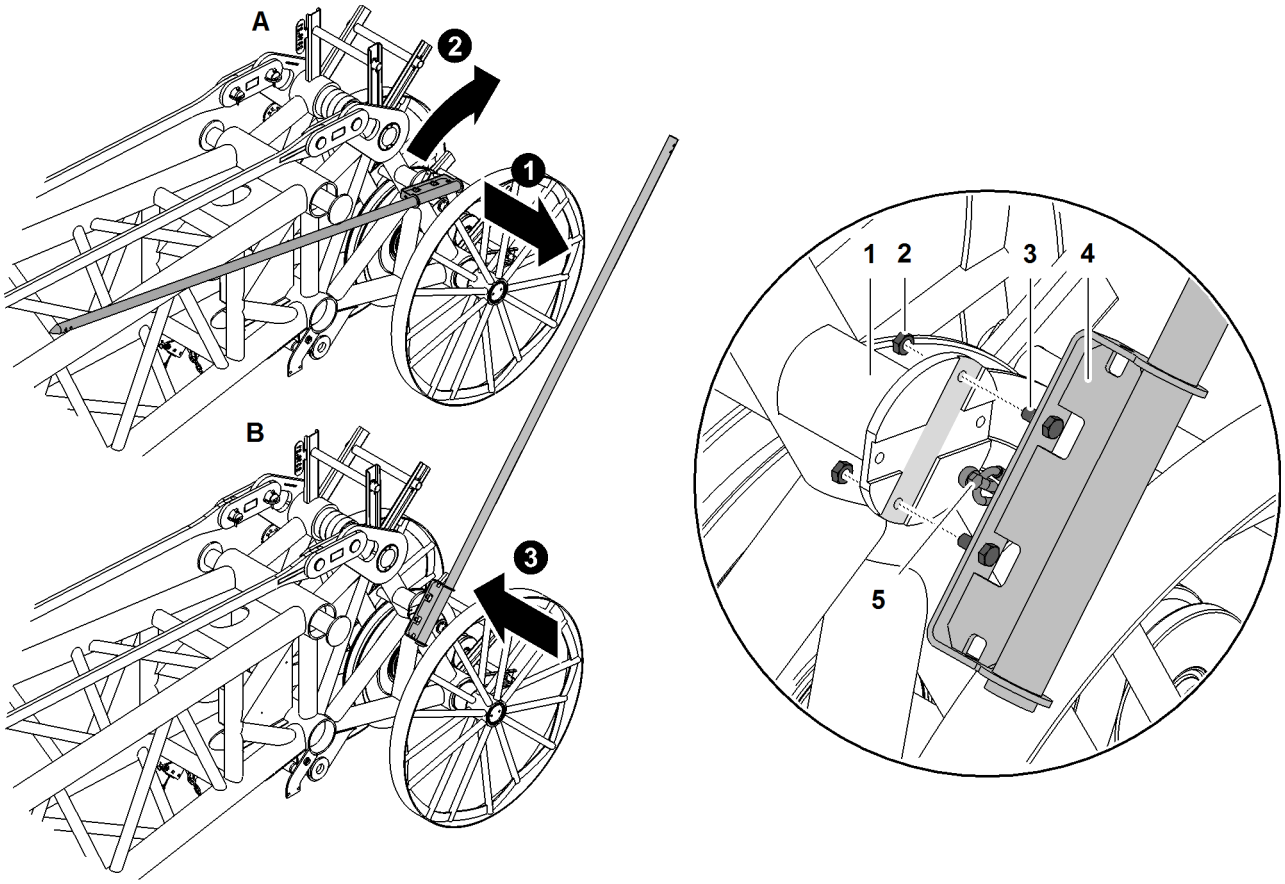

Fig. 5180: Moving the lightning rods on the luffing jib head into working position (illustration of principle)*

A Transport position
B Working position
1 Mounting plate
2 Nut (2x)
3 Screw (2x)
4 Lightning rod
5 Safety rope

- ▶ Undo safety rope **5**.
- ▶ Undo nuts **2**.
- ▶ Undo screws **3**.
- ▶ Move lightning rod **4** from transport position **A** to working position **B**.

Note
Liebherr recommends:

- ▶ Grease threads of the screws **3**.

- ▶ Attach lighting rod **4** withscrews **3**.
- ▶ Lock screws **3** with nuts **2**.

NOTICE
Safety rope not attached!
Dropping parts.

- ▶ Ensure that safety rope **5** is attached.

LWN/LR.x/V03.01//Auslieferung/2015-06-03/en

copyright by
LIEBHERR

▶ Attach safety rope **5**.

NOTICE
Tip not installed!
Improperly deflected current.
Dropping parts.

▶ Ensure that the tip on the lightning rod **4** is installed.

▶ Ensure that the screws of the tip are tightened.

▶ Ensure that the tip on the lightning rod **4** is installed.

▶ Ensure that the screws of the tip are tightened.

Moving the lightning rods* on A-frame2 and A-frame3 into working position

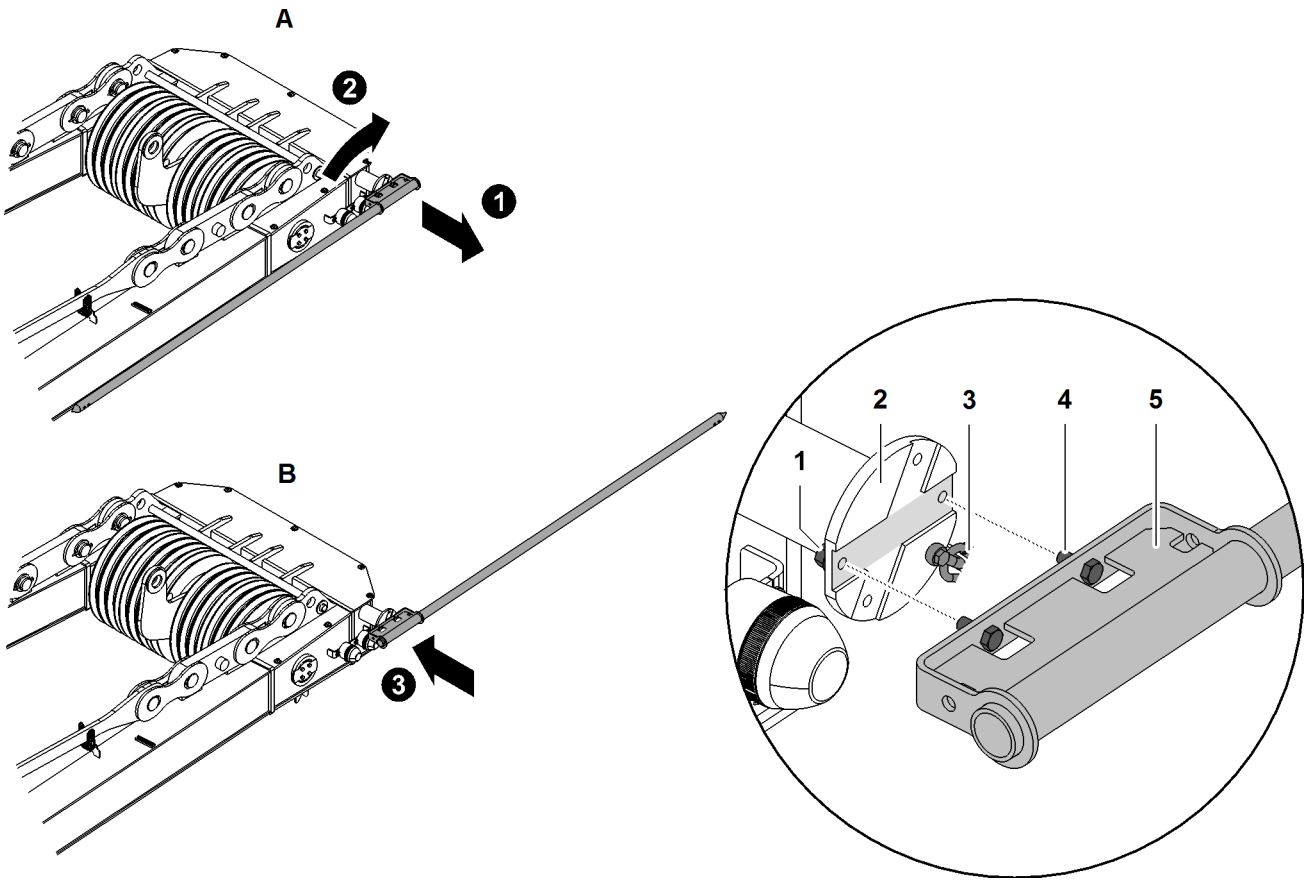

Fig. 5181: Moving the lightning rods on A-frame2 and A-frame3 into working position (illustration of principle)*

A	Transport position	**2**	Mounting plate	**5**	Lightning rod
B	Working position	**3**	Safety rope		
1	Nut (2x)	**4**	Screw (2x)		

▶ Undo safety rope **3**.

▶ Undo nuts **1**.

▶ Undo screws **4**.

▶ Move lightning rod **5** from transport position **A** to working position **B**.

LWN/LR.x/V03.01//Auslieferung/2015-06-03/en

copyright by
LIEBHERR

Note
Liebherr recommends:

▶ Grease threads of the screws **4**.

▶ Attach lighting rod **5** withscrews **4**.

▶ Lock screws **4** with nuts **1**.

NOTICE
Safety rope not attached!
Dropping parts.

▶ Ensure that safety rope **3** is attached.

▶ Attach safety rope **3**.

NOTICE
Tip not installed!
Improperly deflected current.
Dropping parts.

▶ Ensure that the tip on the lightning rod **5** is installed.

▶ Ensure that the screws of the tip are tightened.

▶ Ensure that the tip on the lightning rod **5** is installed.

▶ Ensure that the screws of the tip are tightened.

7.22.23 Reeving the rope

The rope must be reeved as specified in the rope reeving diagram according to the boom and application requirements.

WARNING
Unsecured walking on the boom!
Risk of falling off the boom.

▶ A fall arrest system must be worn when working on the boom to prevent falling.

Ensure that the following conditions are satisfied:
❑ Cylinder adjustment functions are on.

LWN/LR.x/V03.01//Auslieferung/2015-06-03/en

copyright by
LIEBHERR

Reeving the rope using a rope reeving winch

Dismantling rope protection pipes

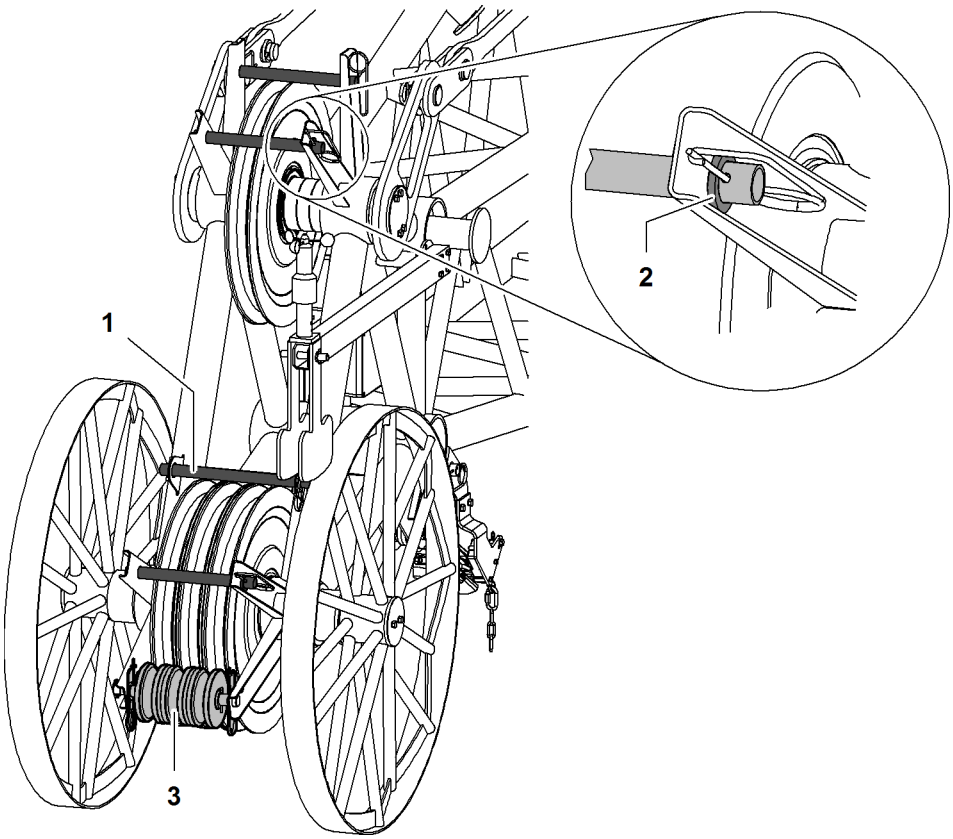

Fig. 5182: Rope protection pipes jib head section (1008, 1309, 1713, 1916, 2316)

1 Rope guard tube (4x)
2 Washer
3 Rope protection rollers package

The rope protection pipes are secured with a cotter pin on one side and with a safety pin on the other side.

NOTICE
Inadmissible operation of winch1/winch2 below 10° jib angle!
Damage to jib head section.

▶ Make sure that winch1/winch2 are not operated below 10° jib angle.

▶ Remove the safety pin and washer **2**.

▶ Remove the rope protection pipes **1**.

Dismantling the rope protection rollers package

The number of rope protection rollers corresponds to the number of pulleys of the jib head.

LWN/LR.x/V03.01//Auslieferung/2015-06-03/en

copyright by
LIEBHERR

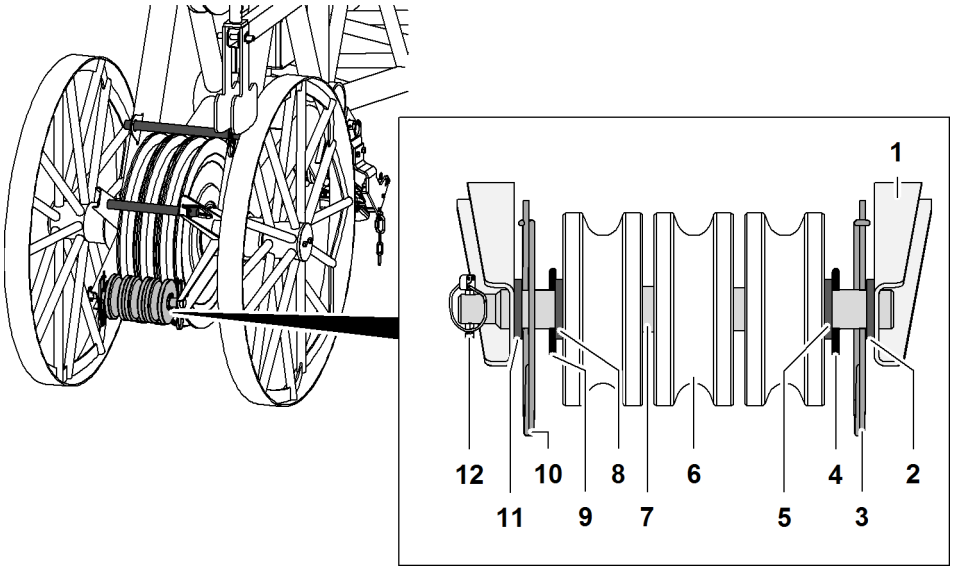

Fig. 5183: Rope protection rollers package

1	Mount	**7**	Shaft
2	Washer	**8**	Washer
3	Safety pin	**9**	Cotter pin
4	Cotter pin	**10**	Safety pin
5	Washer	**11**	Washer
6	Pulley	**12**	Linchpin

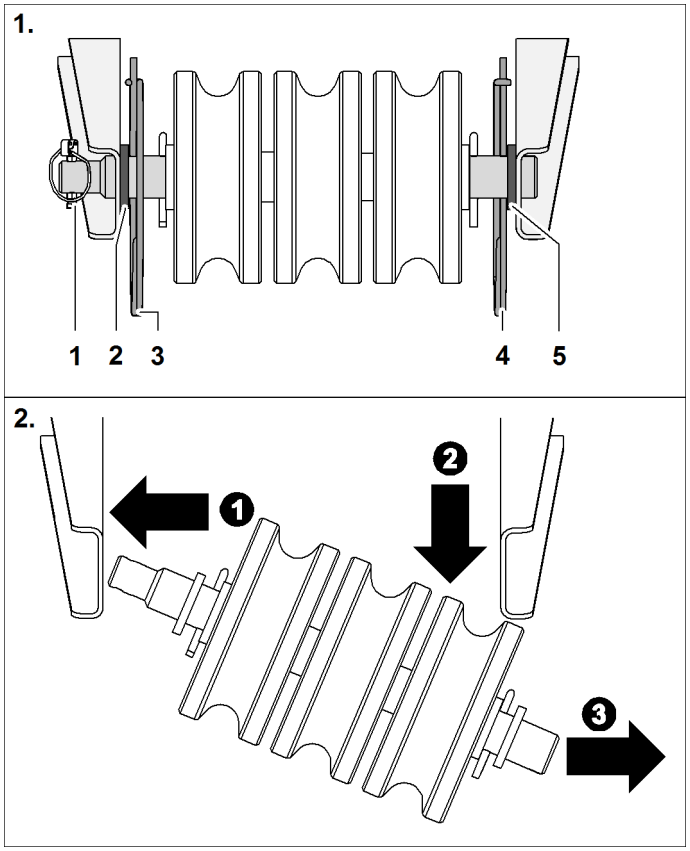

Fig. 5184: Dismantling the rope protection rollers package

1	Linchpin	**4**	Safety pin

See next page for continuation of the image legend

LWN/LR.x/V03.01//Auslieferung/2015-06-03/en

2 Washer
3 Safety pin
5 Washer

▶ Remove the linchpin **3 + 4**.

▶ Remove safety pin **3 + 4**.

▶ Take rope protection rollers package off the support.
▷ Rope protection rollers package is dismantled.

Removing the rope protection pipes on auxiliary jib

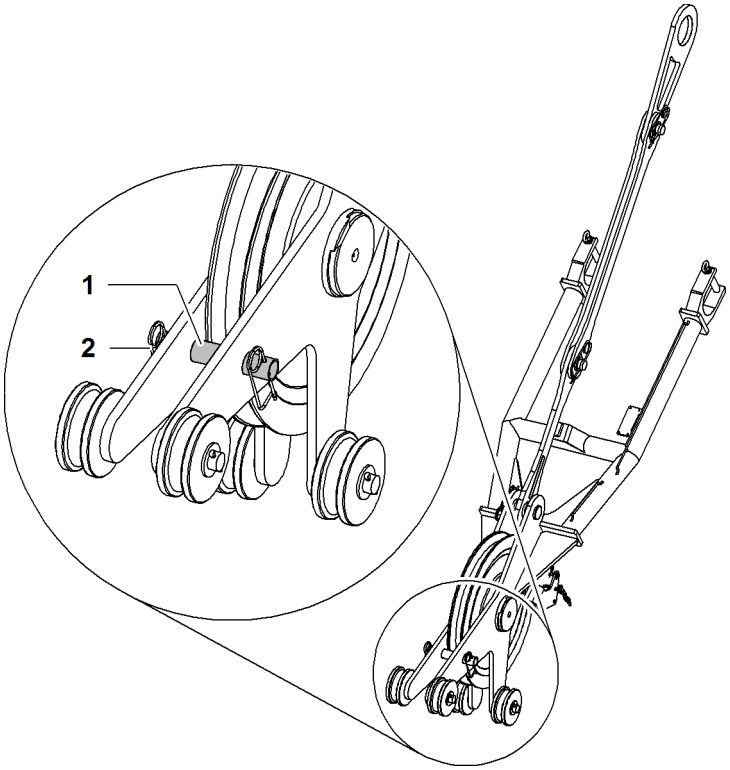

Fig. 5185: Removing the rope protection pipes on auxiliary jib

1 Rope protection pipe
2 Safety pin (2x)

▶ Remove rope protection pipes **1** with attached auxiliary jib.

Reeving the rope

▶ Open up the rope guide (if present).

LWN/LR.x/V03.01//Auslieferung/2015-06-03/en

copyright by
LIEBHERR

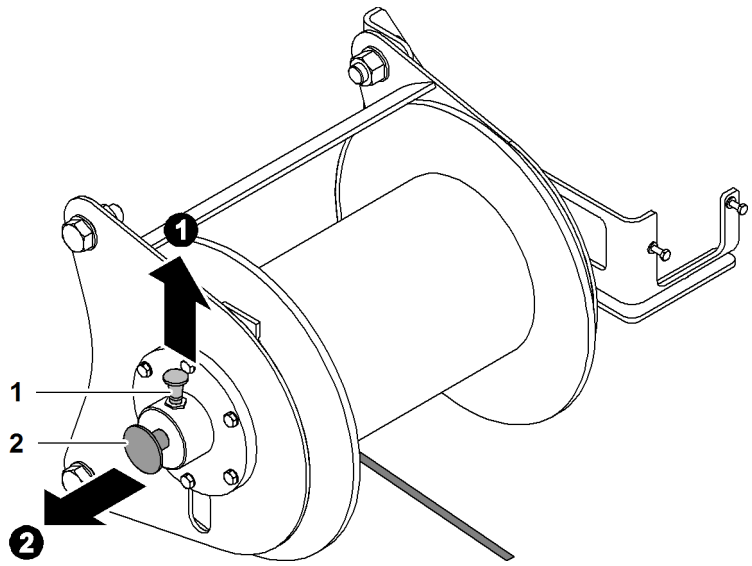

Fig. 5186: Setting the rope lug to free-wheel

1 Locking element **2** Shaft

Note

Liebherr recommends:

▶ Making it easier to pull out the axle **2**: move the rope reeving winch manually back and forth.

▶ Pull up the locking element **1** and pull out the axle **2** at the same time.
▷ Rope reeving winch is set to free-wheel.

LWN/LR.x/V03.01//Auslieferung/2015-06-03/en

copyright by
LIEBHERR

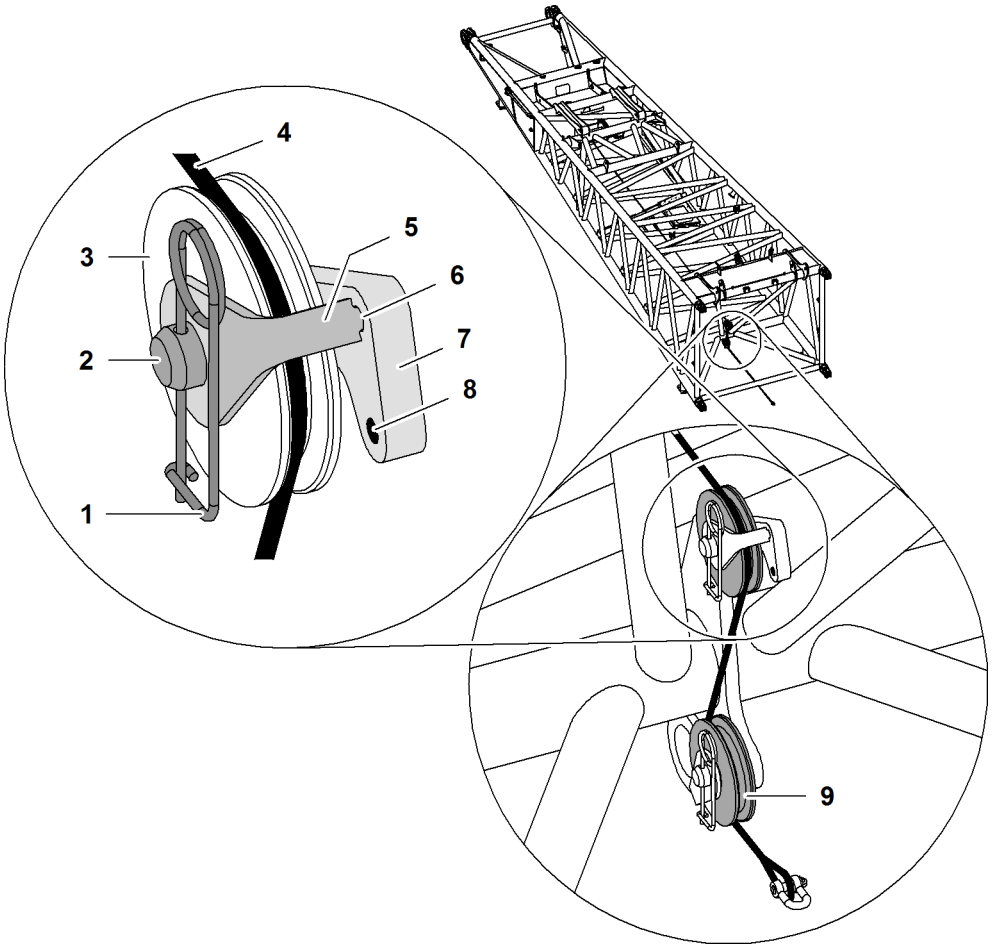

Fig. 5187: Reeving in the rope of the rope reeving winch

1	Safety pin	**6**	Recess
2	Shaft	**7**	Support with recesses
3	Upper pulley	**8**	Recess
4	Rope of the rope reeving winch	**9**	Lower pulley
5	Locking element		

Depending on the machine type, the mounting **7** may have one or two recesses.

▶ Remove safety pins **1**.

▶ Remove **5** securing element.

▶ Place rope of the rope reeving winch **4** across the top pulley **3**.

NOTICE
Wrongly mounted locking element!
Rope of the rope reeving winch jumps out of pulley.

▶ Make sure that the locking element **5** is mounted in recess **6**.

▶ Attach locking element **5** to axle **2** and guide in recess **6**.

▶ Attach the safety pin **1**.

▶ Repeat procedure on bottom pulley **9**.
▷ Rope of the rope reeving winch is guided through pulleys.

▶ Pull the luffing rope under the boom to the boom head.

▶ Reeve in the rope of the rope reeving winch according to reeving plan.

LWN/LR.x/V03.01//Auslieferung/2015-06-03/en

copyright by
LIEBHERR

- ▶ Pull the luffing rope next to the boom towards the basic machine.
- ▶ Lift luffing rope onto boom.
- ▶ Connect luffing rope with rope of winch1/winch2.

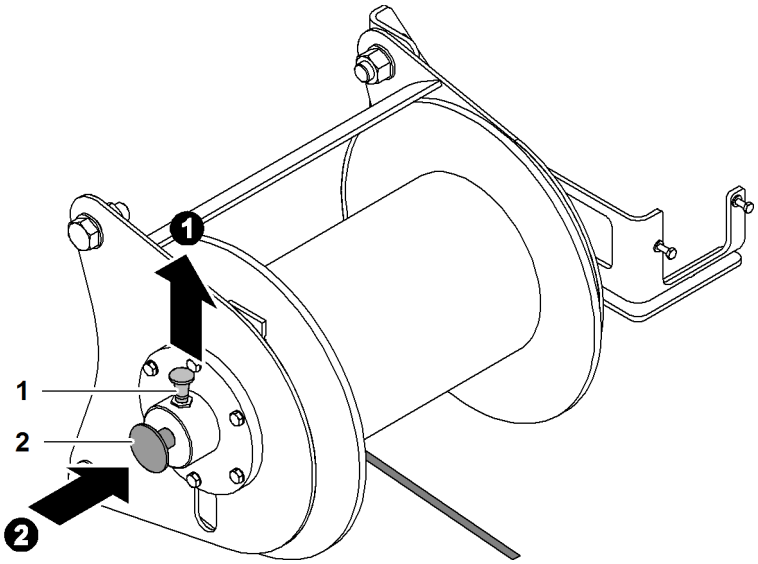

Fig. 5188: Stopping the free-wheel of the rope reeving winch

1 Locking element **2** Shaft

Note

Liebherr recommends:

- ▶ Making it easier to press in the axle **2**: move the rope reeving winch manually back and forth.

- ▶ Pull up the locking element **1** and press in the axle **2** at the same time.
  - ▷ Free-wheel of the luffing rope is deactivated.

WARNING

Never stand in the immediate vicinity of the rope reeving winch or the luffing rope!

- ▶ Make sure that no-one is standing in the danger area.
- ▶ Leave the danger area.

- ▶ Press and hold the *Rope reeving winch* button on control panel *X11*.
  - ▷ Rope reeving winch reeves in the rope of the rope reeving winch and tensions the rope of winch1/winch2.

If rope of winch1/winch2 is in the 8th rope layer (only with free-fall winch 130 kN (29,230 lb_f)):

- ▶ Press the *Bypass limit switch* button on control panel *X23*.
  - ▷ The 3-rope windings limit switch is bypassed.

There must be no slacking of the rope when unwinding.

- ▶ Unwind the rope of winch1/winch2 up to the rope fixing point.
- ▶ Press the *Rope reeving winch* button on control panel *X11*.
  - ▷ Rope reeving winch switched off.

LWN/LR.x/V03.01/Auslieferung/2015-06-03/en

copyright by LIEBHERR

- Remove rope of the rope reeving winch from the rope of winch1/winch2.

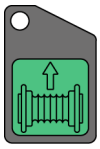

- Press and hold the *Rope reeving winch* button on control panel *X11*.
  - ▷ Luffing rope is being reeved.

- Press the *Rope reeving winch* button on control panel *X11*.
  - ▷ Rope reeving winch switched off.
- Close and secure the rope guide (if present).

Mounting the rope protection rollers package

NOTICE
Wrongly installed washers!
Rope protection rollers package falls out of the support.
Damage to jib head section.

- Ensure proper installation position of the washers.

LWN/LR.x/V03.01//Auslieferung/2015-06-03/en

copyright by
LIEBHERR

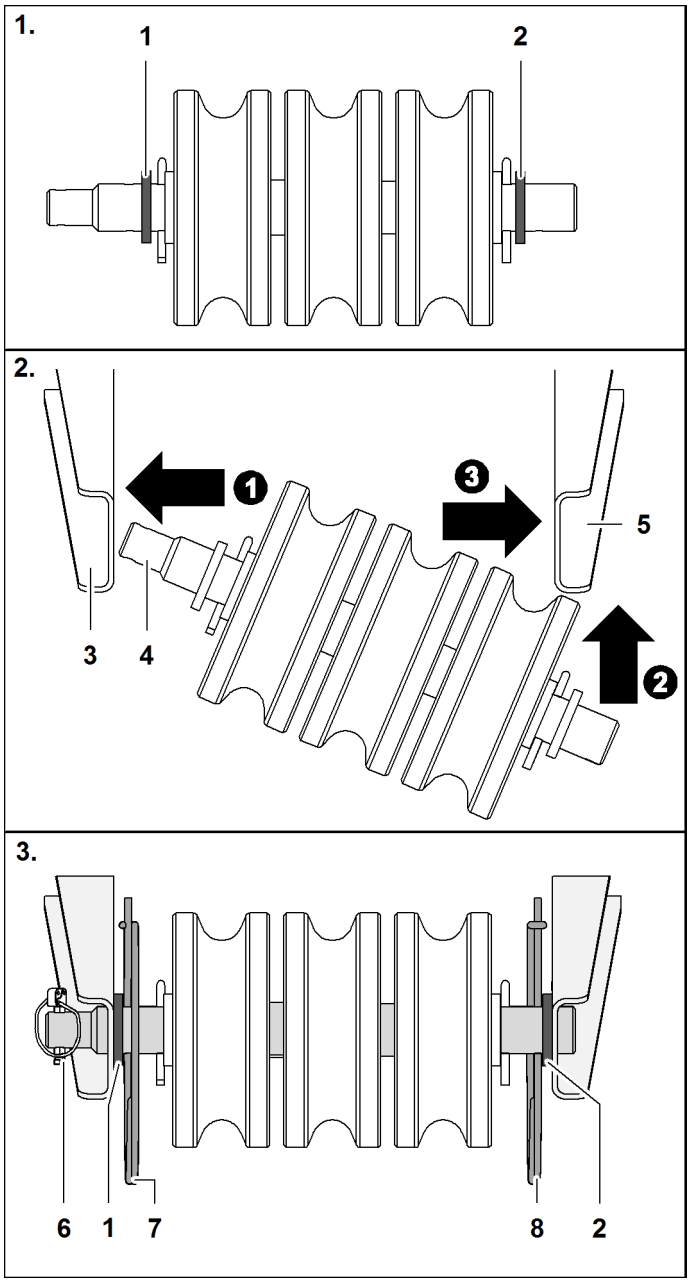

Fig. 5192: Mounting the rope protection rollers package on the jib head section

1	Washer	**5**	Mount
2	Washer	**6**	Linchpin
3	Mount	**7**	Safety pin
4	Shaft	**8**	Safety pin

▶ Place washers **1 + 2** on axle.

▶ Insert axle **4** of the rope protection rollers package into support **3**.

▶ Insert axle **4** into support **5**.

▶ Put washers **1 + 2** into position.

▶ Install safety pins **7 + 8**.

▶ Install linchpin **6**.
▷ Rope protection rollers package is installed.

LWN/LR.x/V03.01//Auslieferung/2015-06-03/en

copyright by
LIEBHERR

Installing rope protection pipes

▶ Mount and secure rope protection pipes on jib head section and (if available) on auxiliary jib.

Reeving the rope without using a rope reeving winch

▶ Remove the rope protection pipes on the boom and the pulley block.

▶ Open up the rope guide (if present).

▶ Connect auxiliary rope with the rope of winch1/winch2.

▶ Pull the auxiliary rope next to the boom as far as the boom head.

▶ Hoist the auxiliary rope onto the boom.

▶ Reeve the auxiliary rope according to the rope reeving system.

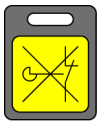

If rope of winch1/winch2 is in the 8th rope layer (only with free-fall winch 130 kN (29,230 lb_f)):

▶ Press the *Bypass limit switch* button on control panel *X23*.
▷ The 3-rope windings limit switch is bypassed.

There must be no slacking of the rope when unwinding.

▶ Unwind the rope of winch1/winch2 up to the rope fixing point.

▶ Remove auxiliary rope from the rope of winch1/winch2.

▶ Close and secure the rope guide (if present).

▶ Mount and secure rope protection pipes.

7.22.24 Attaching the rope fixing point

DANGER
Incorrect installation of pins and pocket lock!
Load breakaway.

▶ Fit pins and pocket lock as instructed.

The collar of the pins and the pocket lock openings are decisive for the installation direction of the rope fixing point.

LWN/LR.x/V03.01//Auslieferung/2015-06-03/en

copyright by
LIEBHERR

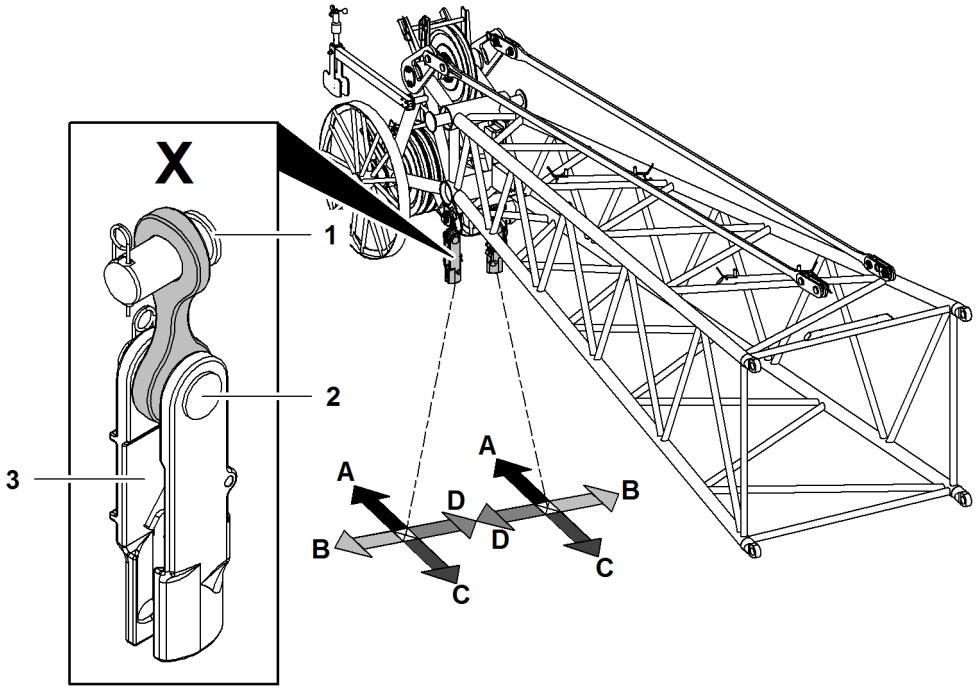

Fig. 5194: Determining the installation direction of the components of the rope fixing point of relevance for installation - luffing jib (illustration of principle)

X	Components needed for fitting	**A**	Direction main boom head
1	Shoulder of pin on the boom	**B**	Outside
2	Shoulder of pin on the pocket lock	**C**	Direction basic machine
3	Pocket lock opening	**D**	Inside

Installation direction of the rope fixing point components of relevance for installation			
	Pin collar on boom	**Pin collar on pocket lock**	**Pocket lock opening**
All rope fixing points	D	C	B
Exceptions:			
Fixed jib head 0906	B	C	B
Fixed jib head 1507	B	C	B

Tab. 554: Installation direction of the rope fixing point components of relevance for installation

WARNING
Incorrectly fit swivels!
Severe injuries, damage to machine.

- ▶ Fit rope with no twists.
- ▶ Install the rope without swivels.

LWN/LR.x/V03.01//Auslieferung/2015-06-03/en

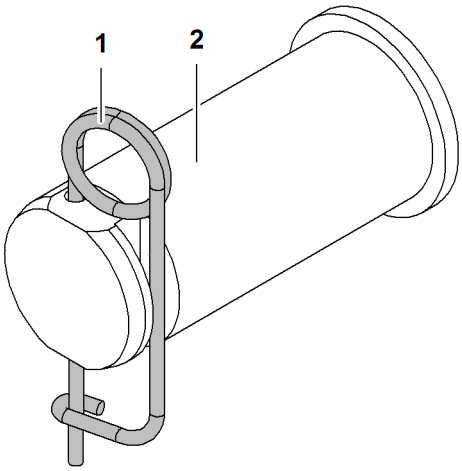

Fig. 5195: Securing the pins

1 Locking spring **2** Pin

DANGER
Pins **2** not completely secured!
Load breakaway.

▶ Ensure that locking spring **1** completely secures the pin **2**.

Installing the rope fixing point on the boom head

▶ Pin cross strap with boom head.

▶ Secure pin with locking spring.

▶ Pin pocket lock with cross strap.

▶ Secure pin with locking spring.

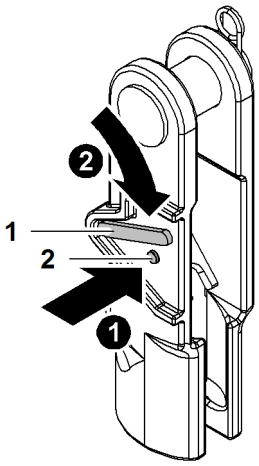

Fig. 5196: Unlocking the pocket lock

1 Safety latch **2** Locking button

▶ Press the locking button **2**.

▶ Press safety latch **1** down and hold.

LWN/LR.x/V03.01//Auslieferung/2015-06-03/en

copyright by LIEBHERR

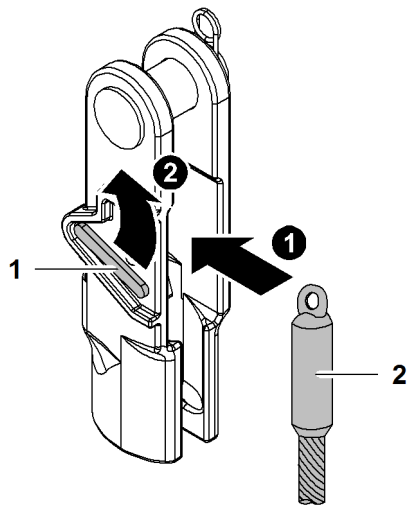

Fig. 5197: Inserting the end of rope into pocket lock and locking the pocket lock

1 Safety latch **2** End of rope

▶ Insert end of rope **2** in pocket lock.

DANGER
End of rope **2** not properly secured!
Load breakaway.

▶ Ensure that the safety latch **1** engages.

▶ Let go of safety latch **1**.
▷ Safety latch **1** engages.

Installing the rope fixing point on the hook or pulley block

▶ Pin pocket lock with hook or pulley block.

▶ Secure pin with locking spring.

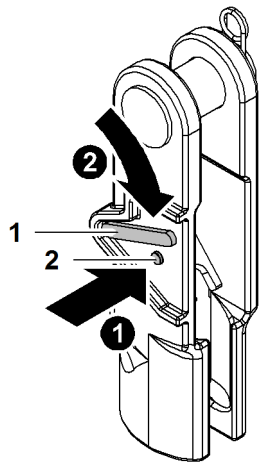

Fig. 5198: Unlocking the pocket lock

1 Safety latch **2** Locking button

▶ Press the locking button **2**.

LWN/LR.x/V03.01//Auslieferung/2015-06-03/en

copyright by
LIEBHERR

▶ Press safety latch **1** down and hold.

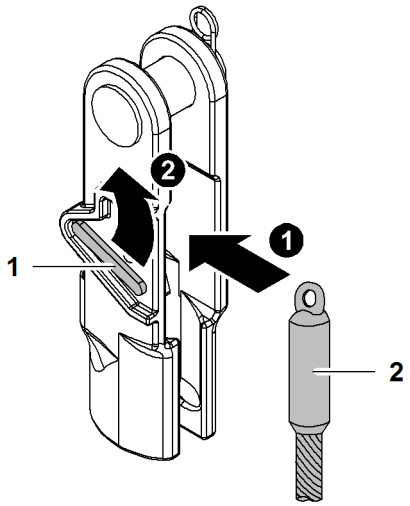

Fig. 5199: Inserting the end of rope into pocket lock and locking the pocket lock

1 Safety latch **2** End of rope

▶ Insert end of rope **2** in pocket lock.

DANGER
End of rope **2** not properly secured!
Load breakaway.

▶ Ensure that the safety latch **1** engages.

▶ Let go of safety latch **1**.
▷ Safety latch **1** engages.

7.22.25 Installing the hoist limit switch weight

NOTICE
Improper installation of the hoist limit switch weight!
Damage to the rope and hoist limit switch weight.

▶ Fit the hoist limit switch weight with no diagonal pull.

▶ Always install the hoist limit switch weight on the slack rope of winch1/winch2, except with simple reeving.

LWN/LR.x/V03.01//Auslieferung/2015-06-03/en

copyright by LIEBHERR

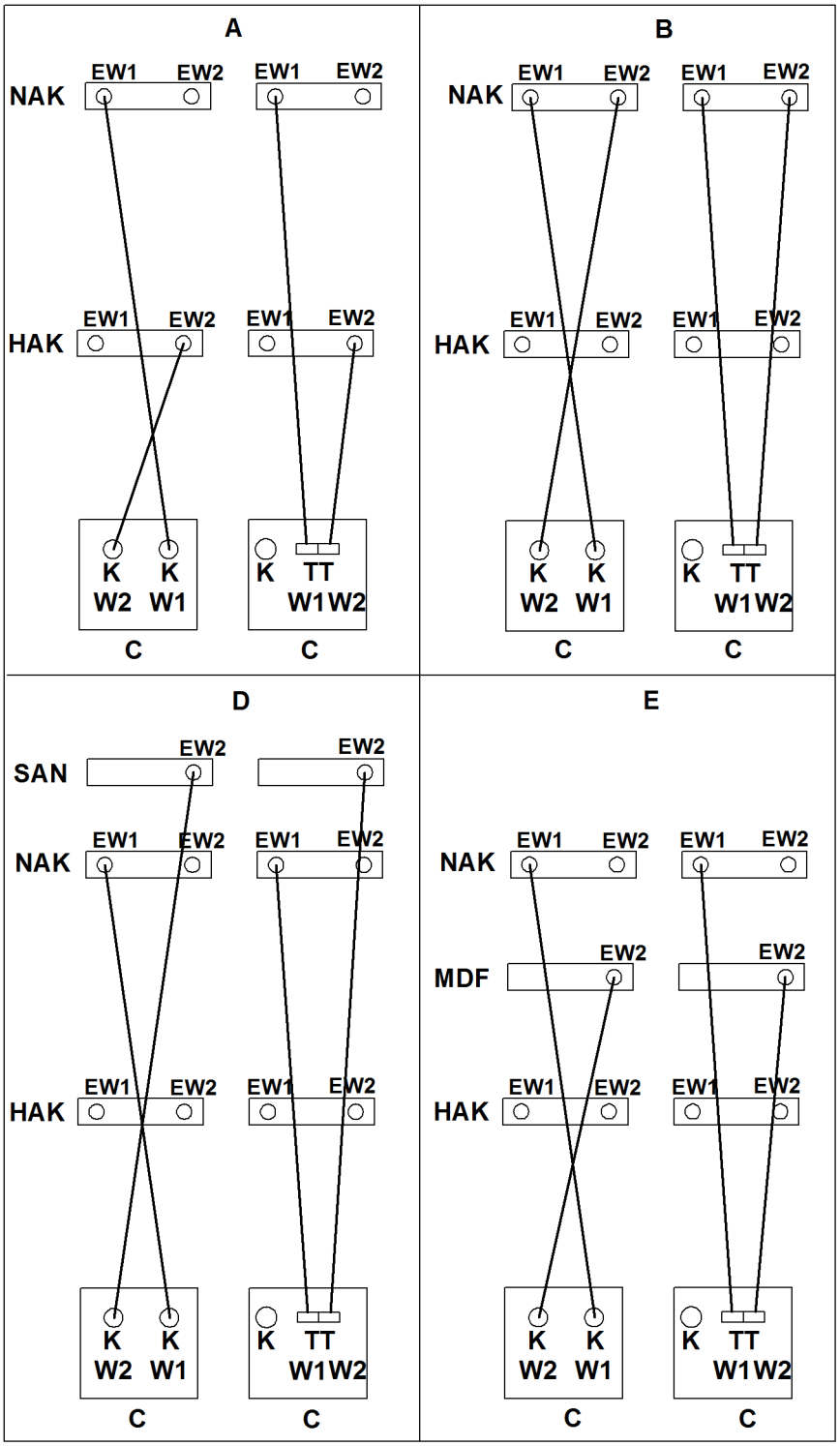

Fig. 5200: Hoist limit switch assignment in dependence on winch1/winch2

A Boom configuration main boom + luffing jib

B Boom configuration main boom + adjustable jib with 2 ropes over jib head section

D Boom configuration main boom + adjustable jib with jib head member on jib head section

K Joystick

MDF Midfall

NAK Jib head section

See next page for continuation of the image legend

LWN/LR.x/V03.01//Auslieferung/2015-06-03/en

copyright by
LIEBHERR

E Boom configuration main boom + luffing jib + midfall
C Cabin
EW1 Hoist limit switch winch1
EW2 Hoist limit switch winch2
HAK Main boom head section
SAN Jib head member on jib head section
TT Double T-control lever
W1 winch1
W2 winch2

NOTICE
Wrong hoist limit switch!
Hoist limit switch does not turn off.

▶ Make sure that the correct hoist limit switch for the correct rope of winch1/winch2 is used.

The hoist limit switch with chain and hoist limit switch weight attached is secured to the inoperative end of the hoist rope.

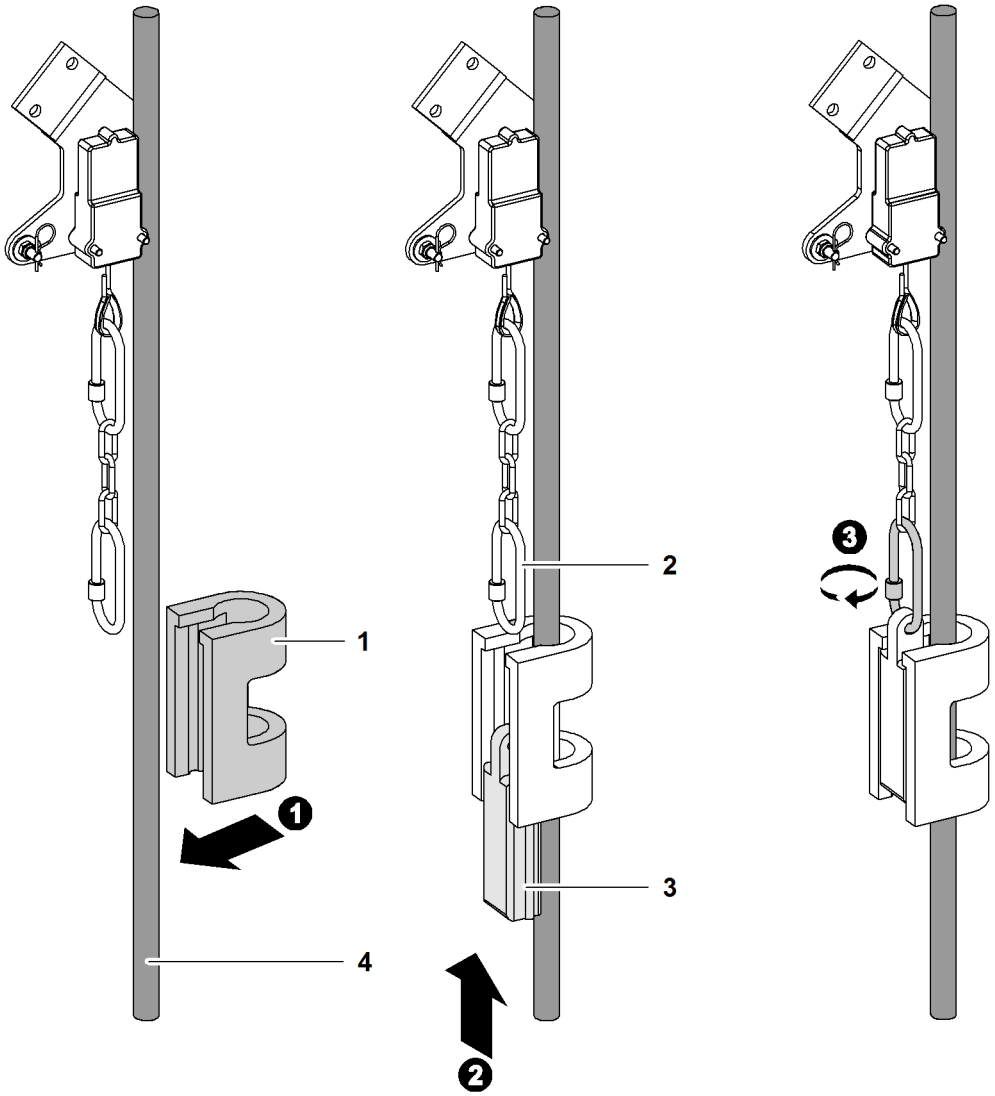

Fig. 5201: Fitting the hoist limit switch weight

1 Hoist limit switch weight (U shape)
2 Carabiner
3 Hoist limit switch weight (wedge)
4 Rope of winch1/winch2

▶ Guide the hoist limit switch weight (U shape) **1** over the rope of winch1/winch2 **4**.

LWN/LR.x/V03.01//Auslieferung/2015-06-03/en

copyright by LIEBHERR

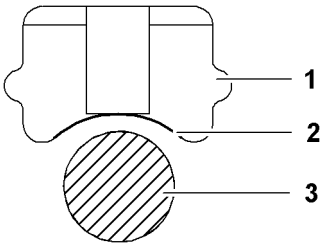

Fig. 5202: Hoist limit switch weight (wedge) view from above

1 Hoist limit switch weight (wedge)
2 Curvature
3 Rope of winch1/winch2

The hoist limit switch weight (wedge) **1** has a curvature **2** on one side.

NOTICE
Wrongly installed hoist limit switch weight (wedge)!
Hoist limit switch weight (wedge) damaged with wrong installation of rope of winch1/winch2.

▶ Make sure that the curvature of the hoist limit switch weight (wedge) is installed in the direction of the rope of winch1/winch2.

▶ Insert the hoist limit switch weight (wedge) **1** from below into the hoist limit switch weight (U shape).

▶ Attach the carabiner to the hoist limit switch weight (wedge) **1**.

Note
Liebherr recommends:

▶ visual inspection of the carabiner hook prior to installation.

▶ Clean dirty carabiner hook with a clean cloth and water.

▶ If necessary, re-clean with a slightly oily cloth.

NOTICE
Improper installation of carabiner!
Damage to machine.

▶ Make sure that the screw of the carabiner points downwards.

▶ Make sure that the securing element is twisted shut.

LWN/LR.x/V03.01//Auslieferung/2015-06-03/en

copyright by
LIEBHERR

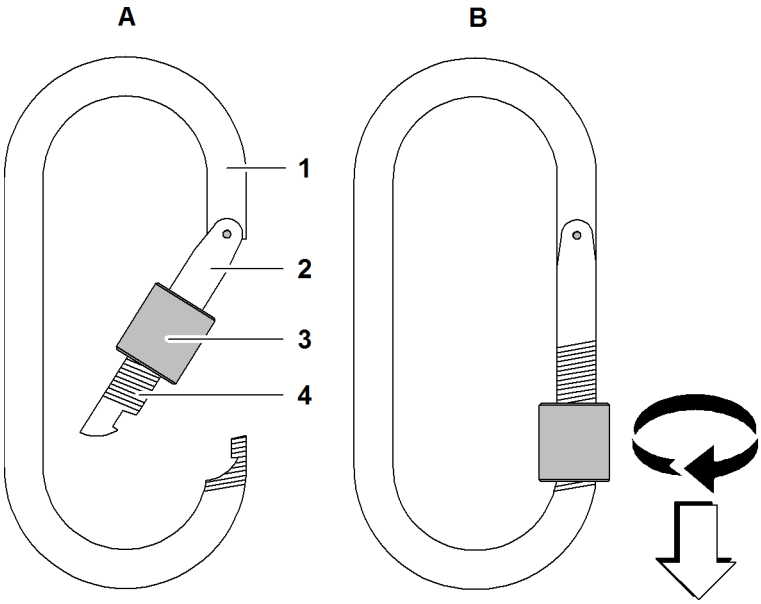

Fig. 5203: Carabiner

1	Carabiner	**4**	Thread
2	Snapper	**A**	Opened carabiner
3	Securing element	**B**	Closed carabiner

▶ Secure carabiner **1** with securing element **3**.

NOTICE
The chain on the hoist limit switch weight is too short!
The hoist limit switch weight responds too late. The hook damages the boom head.

▶ Ensure that hoist limit switch weight chain is at least 3 m (9‘ 10“ ft-in) and at most 4.5 m (14‘ 9“ ft-in) long.

▶ Attach the chain between the hoist limit switch weight and the hoist limit switch.

7.22.26 Bypass unused hoist limit switches.

DANGER
The hoist limit switch has been bypassed illegally!
Load breakaway.

▶ Only ever bypass unused hoist limit switches.

NOTICE
Wrong hoist limit switch is bypassed!
The hook damages the boom head.

▶ Lock winch 1 using the left hoist limit switch.

▶ Lock winch 2 using the right hoist limit switch.

Ensure that the following conditions are fulfilled:
❑ Only motion is performed with a rope of winch1/winch2. A hoist limit switch is not required.

LWN/LR.x/V03.01//Auslieferung/2015-06-03/en

copyright by
LIEBHERR

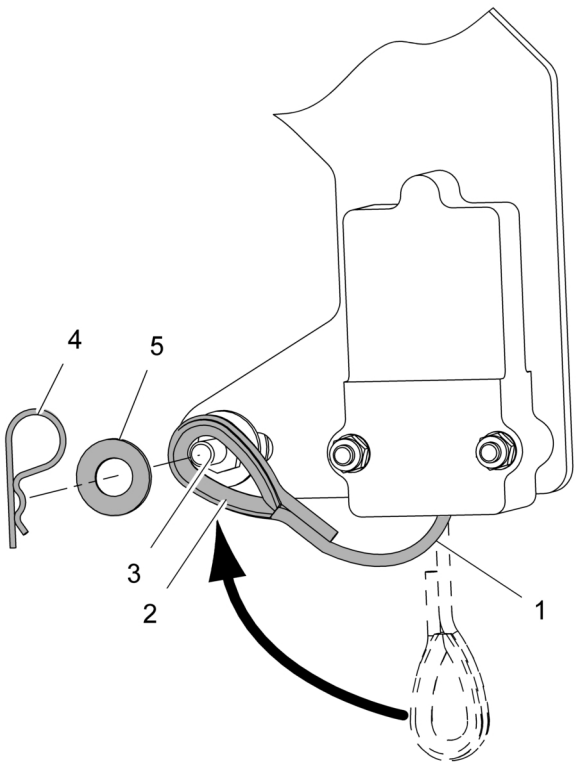

Fig. 5204: Bypassing the hoist limit switch mechanically

1	Steel rope	**4**	Safety pin
2	Loop	**5**	Washer
3	Stud bolt		

▶ Pull the steel rope **1** and place the loop **2**over the stud bolt **3**.
▷ Hoist limit switch is bypassed.

▶ Protect the sling **2** from slipping off the stud bolt **3** by securing it with a washer **5** and a safety pin **4**.

7.22.27 Erecting the main boom + luffing jib

Ensure that the following conditions are fulfilled:
❑ Boom configuration can be erected with counterweight.
❑ Signalmen and assistants are instructed.
❑ All work on the boom has been completed.
❑ No loose parts or tools have been left on the boom.

Note
The overall center of gravity of the machine is moved beyond the first running roller!
Sudden swinging of the boom/jib when erecting.

Liebherr recommends:
▶ When using long main booms and short jibs, follow the procedure for “Blocked Crawlers” (For more information see: 4.27 Blocked crawlers*, page 964) .

LWN/LR.x/V03.01//Auslieferung/2015-06-03/en

copyright by
LIEBHERR

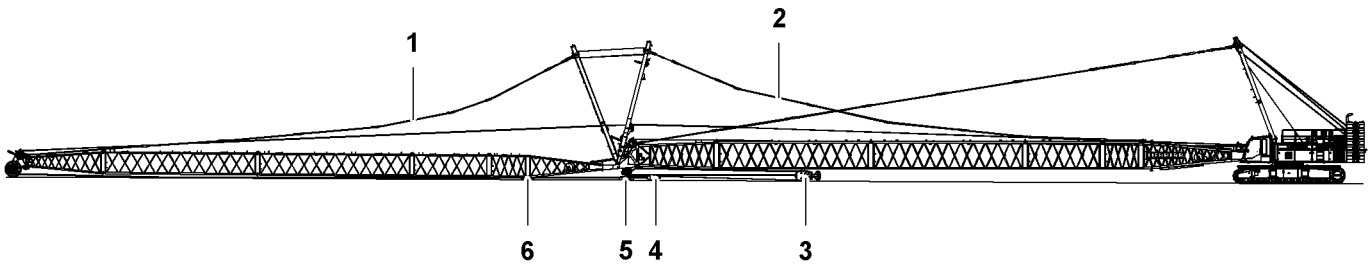

Fig. 5205: Main boom with luffing jib on the ground (illustration of principle)

1	Jib pendant straps	**3**	Pulley block	**5**	Timber
2	Jib backstay straps	**4**	Hook	**6**	Timber

DANGER
Hoist limit switch bypassed on control panel *X23* in crane mode!
Load breakaway.

▶ Only bypass hoist limit switch on control panel *X23* when assembling or disassembling the machine.

If hoist limit switch weight is on the ground:
▶ Press the *Bypass limit switch* button on control panel *X23*.
▷ Hoist limit switches are bypassed.

▶ Press the *Load moment limiter assembly/self-lock* button on control panel *X23*.

No load chart exist for machines geometry:
▷ Function “load moment limiter assembly” is active.
▷ The LED on the button *Load moment limiter assembly/self-lock* lights up.
▷ Machine functions are enabled unlimited.
▷ Load Moment Limiter lamps flash orange.

DANGER
Erectability chart is not followed!
Machine toppling over.

▶ Only raise the boom when erection is permitted according to the erectability chart.

WARNING
Falling objects!

▶ Any loose parts and tools must be removed from the boom.

▶ Make sure that no-one is standing in the danger area.

▶ Leave the danger area.

▶ Slowly lift main boom.
▷ The main boom pendant straps are tensioned.

DANGER
Main boom and jib are lifted at the same time!
Machine toppling over.

▶ Do not lift jib together with main boom out of horizontal position.

LWN/LR.x/V03.01//Auslieferung/2015-06-03/en

copyright by
LIEBHERR

WARNING
Dangerous voltage in boom!
Sudden sideway movement when lifting boom from ground.

- ▶ Make sure that no-one is standing in the danger area.
- ▶ Leave the danger area.

NOTICE
Incorrect erection procedure is followed!
Damage to the equipment.

- ▶ Do not drag the hook or the pulley block along the ground.
- ▶ Do not allow any slacking of the rope.
- ▶ Make sure that the lightning rod* on the jib head does not scrape on the ground.

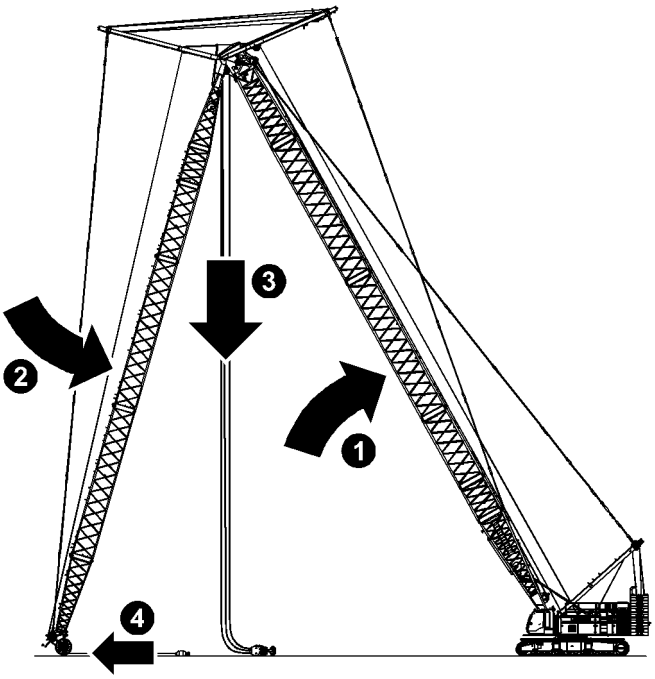

Fig. 5208: Lifting the main boom and lowering the jib at the same time (illustration of principle)

If the jib is shorter than the main boom, the lower jib limit switch triggers before the main boom reaches an angle of 85°.

If the jib is longer than the main boom, the main boom reaches an angle of 85° before the jib limit switch triggers.

The jib pendant straps must be clearly slack when erecting.

- ▶ Lift main boom and lower jib at the same time until main boom reaches an angle of 85° or the bottom jib limit switch triggers.
  - ▷ Main boom lifts off the ground.
  - ▷ Jib head runs backwards on guide rollers.
- ▶ Unwind rope of winch1/winch2 on main boom if necessary.
- ▶ Reeve rope of winch1/winch2 on jib if necessary.

LWN/LR.x/V03.01/Auslieferung/2015-06-03/en

copyright by
LIEBHERR

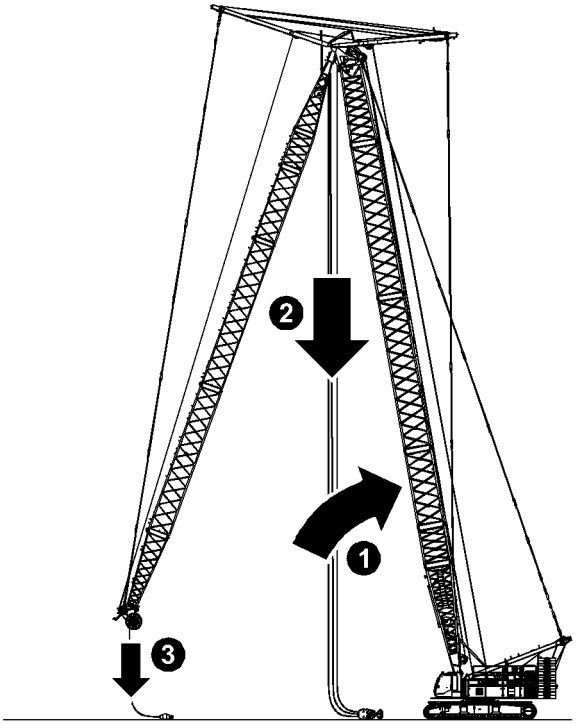

Fig. 5209: Lifting the main boom until main boom has reached an angle of 85° (illustration of principle)

When the bottom jib limit switch triggers:

▶ Lift main boom until main boom has reached an angle of 85°.
  ▷ Jib head lifts off the ground.

NOTICE
Incorrect erection procedure!
Damage to equipment.

▶ Do not drag hook or pulley block along the ground.

▶ Prevent slack rope.

▶ Unwind rope of winch1/winch2 on main boom if necessary.

▶ Reeve rope of winch1/winch2 on jib if necessary.

LWN/LR.x/V03.01//Auslieferung/2015-06-03/en

copyright by
LIEBHERR

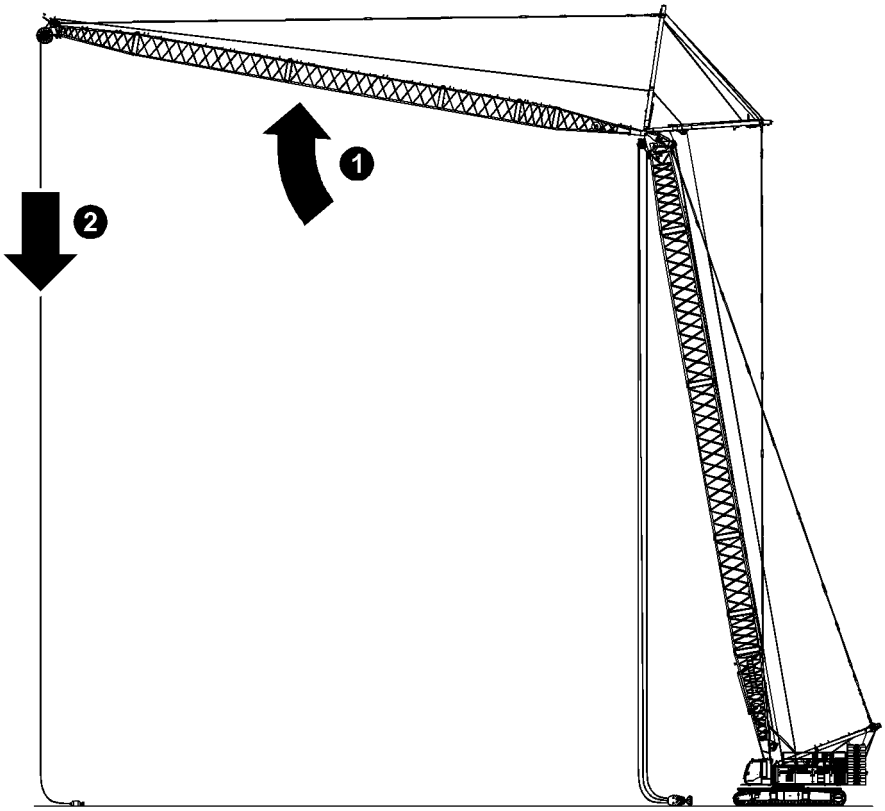

Fig. 5210: Lifting the jib

▶ Lift jib.
As soon as there is a load chart for machines geometry:
▷ Deactivate function “load moment limiter assembly”.
▷ The LED on the button *Load moment limiter assembly/self-lock* goes out.
▷ Load moment limiter is active.
▷ Load moment limiter lamps light up according to the current status of the Load Moment Limiter system.

Troubleshooting
Jib cannot be lifted?
With boom configurations with long jibs, the line pull of the jib luffing winch is not sufficient to lift the jib.

▶ Lift main boom until jib head lifts off the ground.

▶ Lift jib.

NOTICE
Incorrect erection procedure!
Damage to equipment.

▶ Do not drag hook or pulley block along the ground.

▶ Prevent slack rope.

▶ Unwind rope of winch1/winch2 on jib if necessary.

When the maximum permitted lifting capacity is at least equal to the weight of the hook and/or pulley block:
▶ Raise the hook/pulley block.

LWN/LR.x/V03.01//Auslieferung/2015-06-03/en

copyright by
LIEBHERR

▶ Erect jib until it is in the desired position.
▷ Main boom with luffing jib is erected:

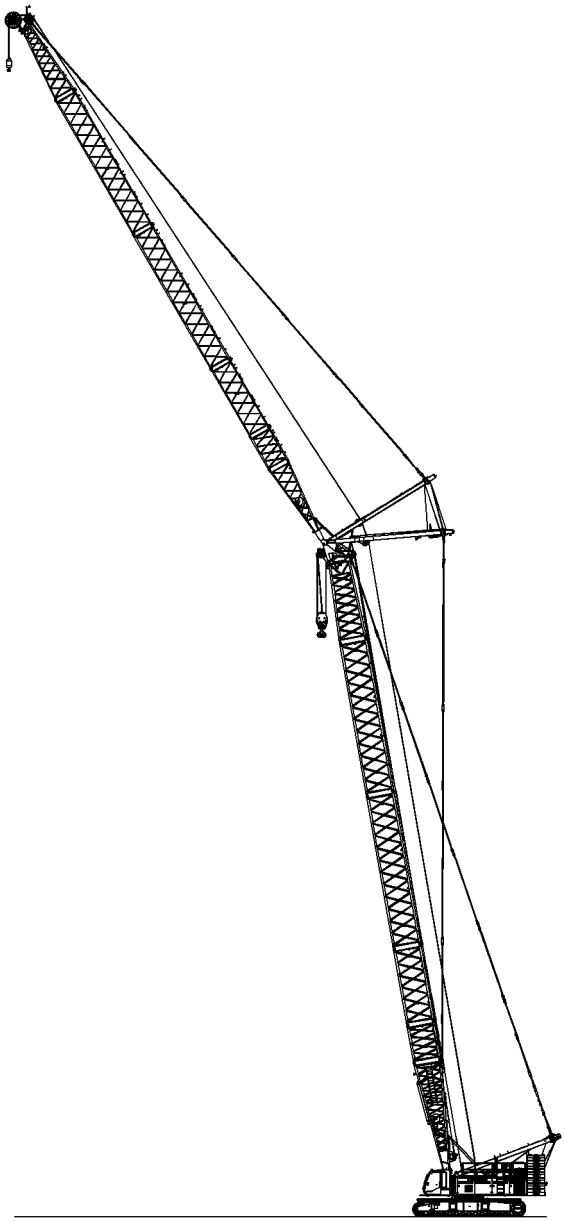

Fig. 5211: Main boom with luffing jib is erected

7.22.28 Switching off assembly mode functions

Ensure that the following conditions are fulfilled:
❑ The machine is fully assembled and erected.
❑ All limit switches are fitted and operational.

▶ Press the *Assembly functions* switch on control panel *X12*.
▷ Assembly mode functions are switched off.
▷ The symbol *Assembly functions* disappears on screen.

LWN/LR.x/V03.01//Auslieferung/2015-06-03/en

copyright by
LIEBHERR

7.22.29 Checking the top jib limit switch for function

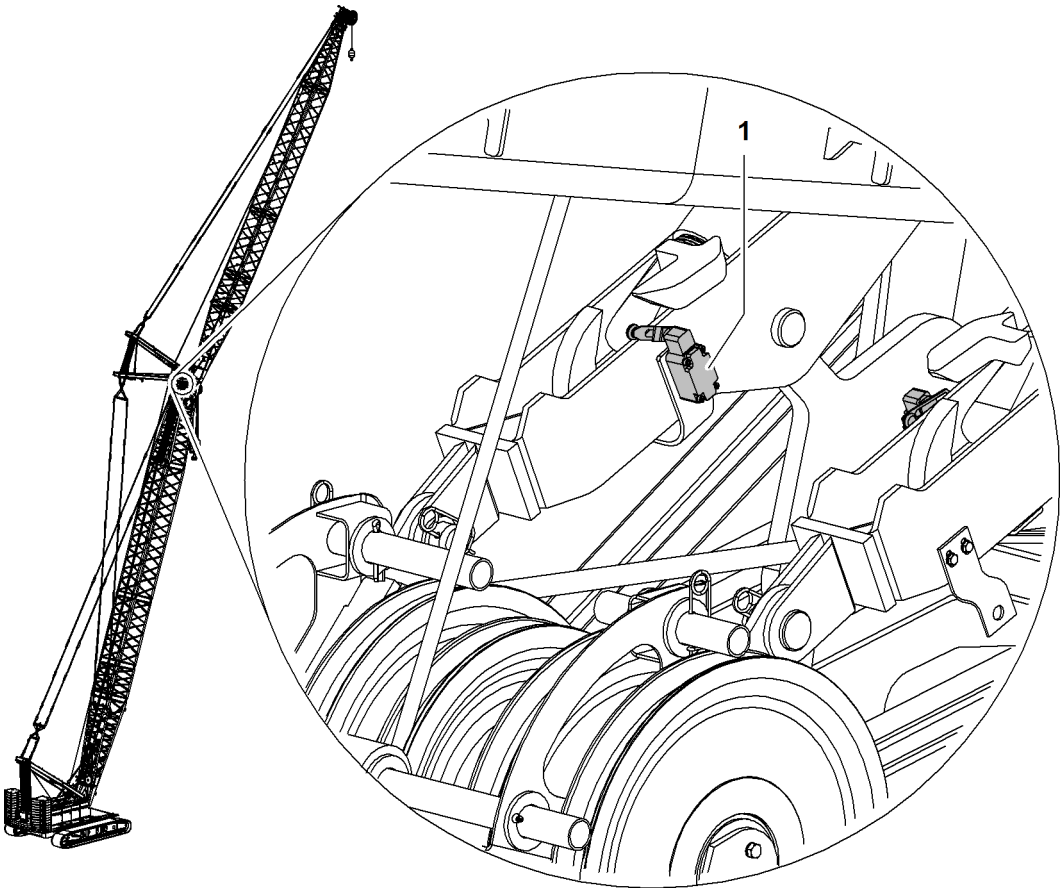

Fig. 5213: Checking the top jib limit switch for function

1 Top jib limit switch (2x)

LWN/LR.x/V03.01//Auslieferung/2015-06-03/en

copyright by
LIEBHERR

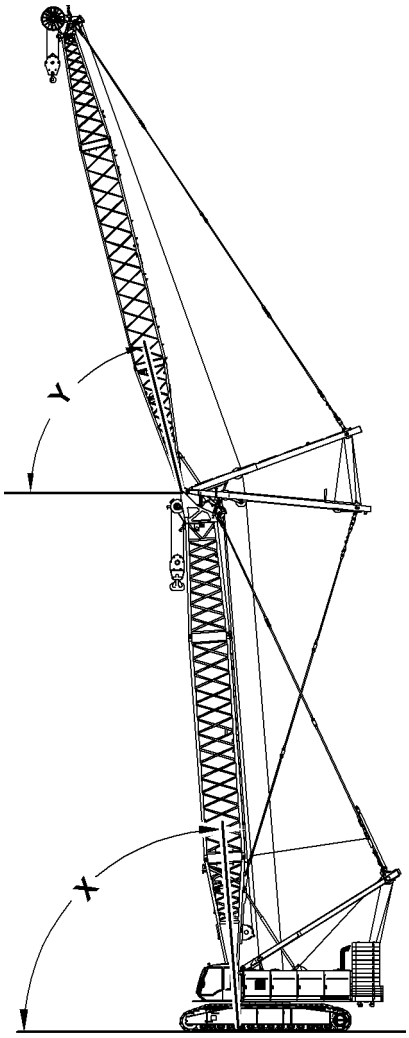

Fig. 5214: Top jib angle

Boom configuration	Angle **X**	Angle **Y**
Main boom + luffing jib	88°	78°
Main boom + luffing jib + midfall		

Tab. 555: Jib limit switch

NOTICE
Wrongly adjusted jib limit switch!
Damage to machine.

▶ Make sure that the jib limit switch is properly adjusted.

▶ Erect the jib until the screen *Operation* shows the angle **X**.
  ▷ Limit switch triggers.
  ▷ Lift jib is locked.

If the limit switch triggers too early or not at all:
▶ Switch off machine.

▶ Contact Liebherr service department.

LWN/LR.x/V03.01//Auslieferung/2015-06-03/en

copyright by
LIEBHERR

7.22.30 Checking the jib limit switch plate for proper adjustment

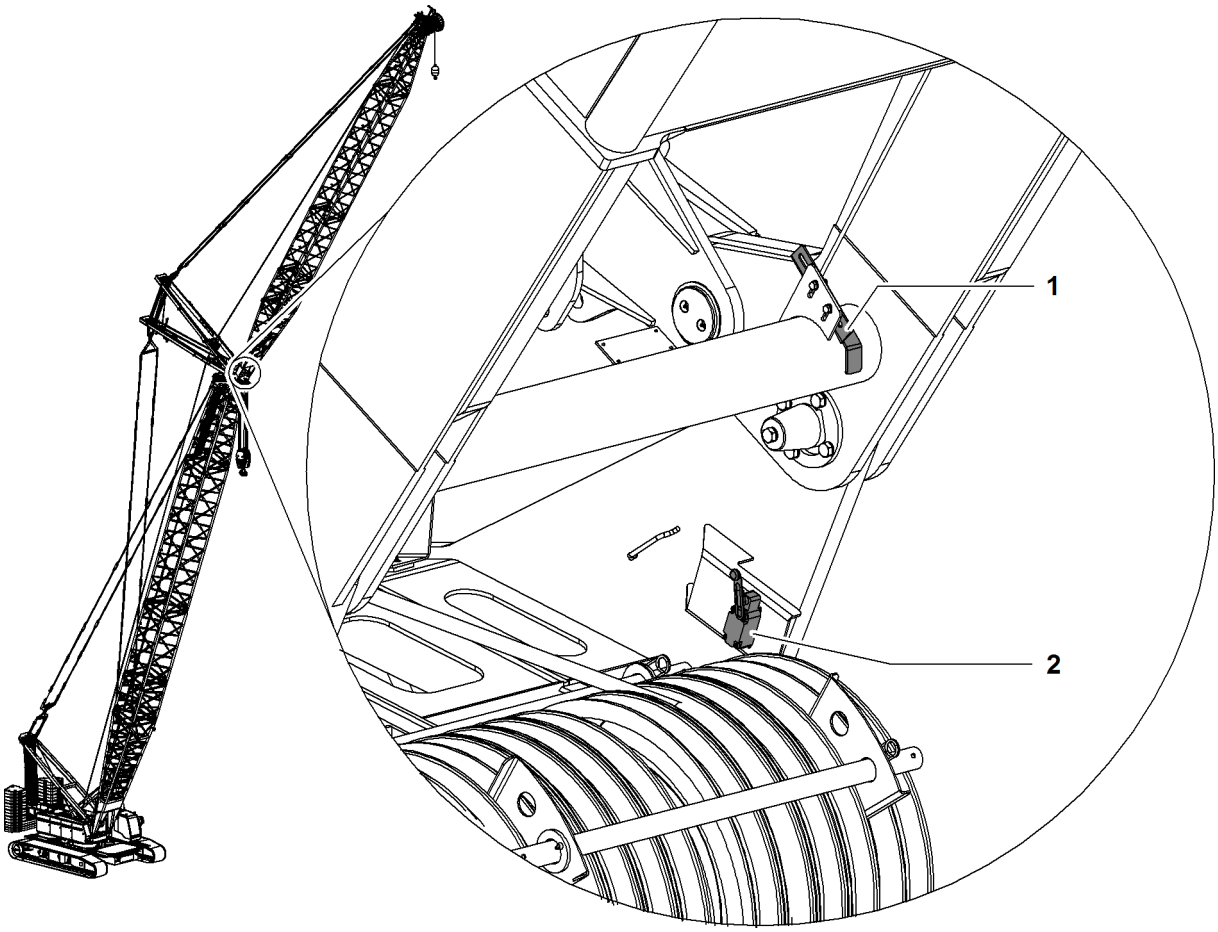

Fig. 5215: Checking the jib limit switch plate for proper adjustment

1 Jib limit switch plate **2** Jib limit switch

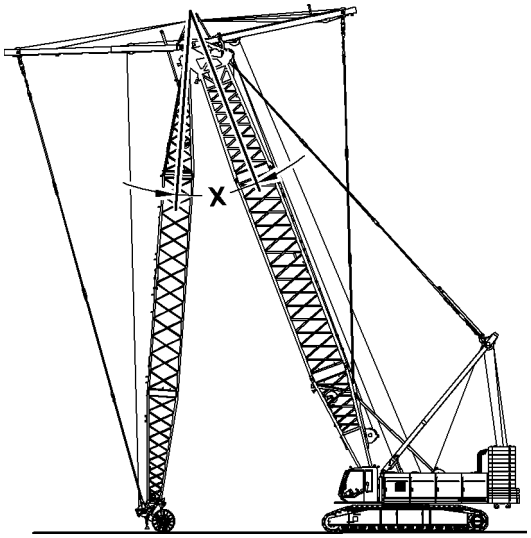

Fig. 5216: Bottom jib angle

LWN/LR.x/V03.01//Auslieferung/2015-06-03/en

Boom configuration	Angle **X**
Main boom + luffing jib	30° difference to main boom
Main boom + luffing jib + midfall	

Tab. 556: Jib limit switch plate

NOTICE
Incorrect calibration of the jib limit switch plate!
Damage to machine.

▶ Make sure that the jib limit switch plate is properly adjusted.

▶ Lower the jib until the screen *Operation* shows the angle **X**.
  ▷ Limit switch triggers.
  ▷ Lower jib is locked.

If the limit switch triggers too early or not at all:
▶ Switch off machine.

▶ Contact Liebherr service department.

LWN/LR.x/V03.01//Auslieferung/2015-06-03/en

copyright by
LIEBHERR

7.23 Luffing jib 2316 + midfall 2316

System-relevant information for luffing jib 2316 + midfall 2316:
- Configuration of jib
  - Mid-point suspensions installation positions
- Lengths of jib mid-point suspensions
- Configuration of main boom
- Overview of steel pendant straps on luffing jib 2316 + midfall 2316
- Overview of CF pendant straps on luffing jib 2316 + midfall 2316
- Reeving diagrams for one rope across jib head 2316 (load position1)
- Reeving diagrams for one rope across midfall 2316 (load position3)

7.23.1 Configuration of jib

DANGER
Excess length of jib!
Structural breakdown.

▶ Check jib length in load chart for validity.

Jib length	Position of midfall	Configuration of jib (symbolic)
38.5 m 126 ft	16 m 52‘ 6“ ft-in	
41.5 m 136 ft	19 m 62‘ 4“ ft-in	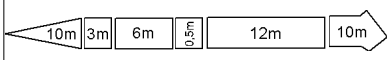
44.5 m 146 ft	22 m 72‘ 2“ ft-in	
47.5 m 156 ft	25 m 82‘ ft-in	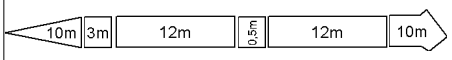
50.5 m 166 ft	28 m 91‘ 10“ ft-in	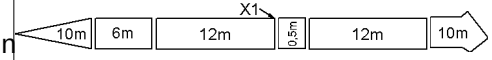
53.5 m 176 ft	31 m 101‘ 8“ ft-in	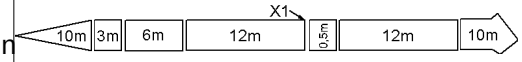
56.5 m 185 ft	22 m 72‘ 2“ ft-in	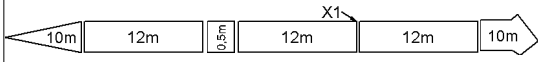
59.5 m 195 ft	25 m 82‘ ft-in	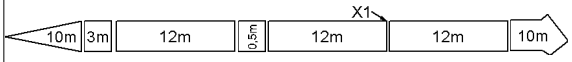
62.5 m 205 ft	28 m 91‘ 10“ ft-in	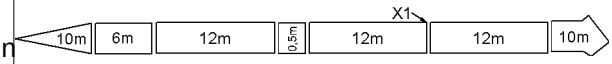
65.5 m 215 ft	31 m 101‘ 8“ ft-in	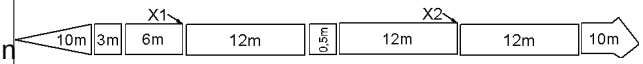
68.5 m 225 ft	34 m 111‘ 7“ ft-in	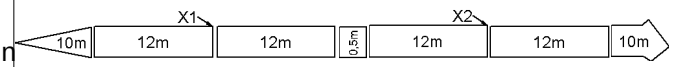
71.5 m 235 ft	37 m 121‘ 5“ ft-in	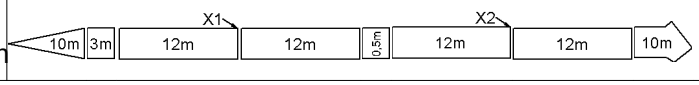

LWN/LR.x/V03.01//Auslieferung/2015-06-03/en

copyright by
LIEBHERR

Jib length	Position of midfall	Configuration of jib (symbolic)
74.5 m 244 ft	40 m 131‘ 3“ ft-in	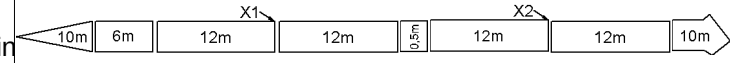
77.5 m 254 ft	43 m 141‘ 1“ ft-in	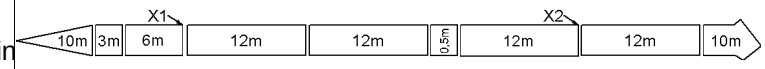
80.5 m 264 ft	34 m 111‘ 7“ ft-in	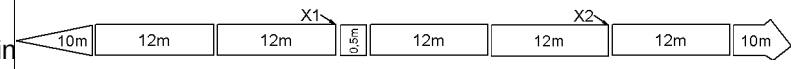
83.5 m 274 ft	37 m 121‘ 5“ ft-in	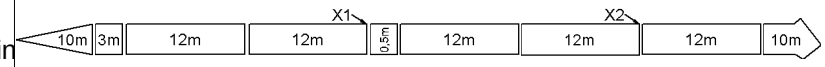
86.5 m 284 ft	40 m 131‘ 3“ ft-in	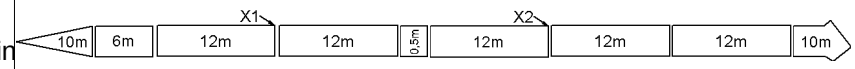
89.5 m 294 ft	43 m 141‘ 1“ ft-in	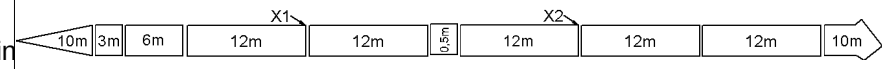
92.5 m 304 ft	46 m 150‘ 11“ ft-in	
95.5 m 313 ft	49 m 160‘ 9“ ft-in	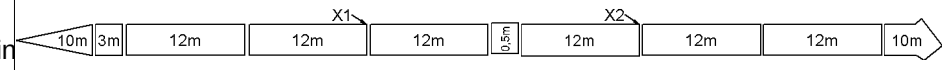
98.5 m 323 ft	52 m 170‘ 7“ ft-in	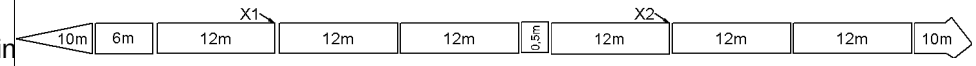
101.5 m 333 ft	55 m 180‘ 5“ ft-in	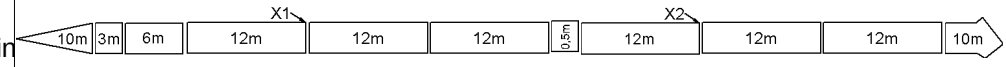
104.5 m 343 ft	46 m 150‘ 11“ ft-in	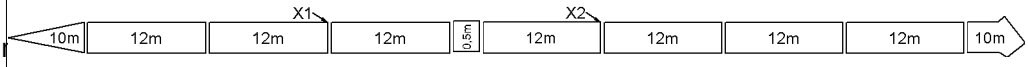
107.5 m 353 ft	49 m 160‘ 9“ ft-in	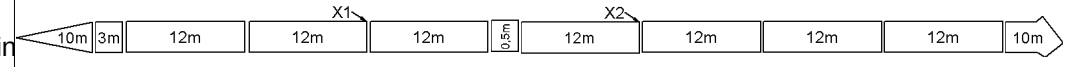
110.5 m 363 ft	52 m 170‘ 7“ ft-in	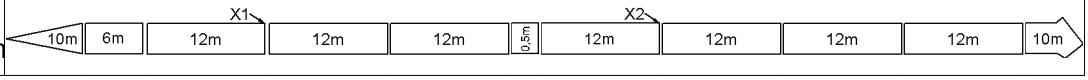

Tab. 557: Configuration of luffing jib 2316 + midfall 2316

X1 - Installation position mid-point suspension 1

X2 - Installation position mid-point suspension 2

7.23.2 Lengths of jib mid-point suspensions

Main boom length	Backstay pendant 1 (X1)	Backstay pendant 2 (X2)
	Rope length	Rope length
50.5 m 166 ft	3 m 9‘ 10“ ft-in	
53.5 m 176 ft	3 m 9‘ 10“ ft-in	
56.5 m 185 ft	2.6 m 8‘ 6“ ft-in	
59.5 m 195 ft	2.6 m 8‘ 6“ ft-in	

LWN/LR.x/V03.01//Auslieferung/2015-06-03/en

copyright by LIEBHERR

Main boom length	Backstay pendant 1 (X1)	Backstay pendant 2 (X2)
	Rope length	Rope length
62.5 m 205 ft	2.1 m 6‘ 11“ ft-in	
65.5 m 215 ft	5.6 m 18‘ 4“ ft-in = 3.0 m (9‘ 10“ ft-in) + 2.6 m (8‘ 6“ ft-in)	2.1 m 6‘ 11“ ft-in
68.5 m 225 ft	5.1 m 16‘ 9“ ft-in = 3.0 m (9‘ 10“ ft-in) + 2.1 m (6‘ 11“ ft-in)	1.6 m 5‘ 3“ ft-in
71.5 m 235 ft	5.1 m 16‘ 9“ ft-in = 3.0 m (9‘ 10“ ft-in) + 2.1 m (6‘ 11“ ft-in)	1.6 m 5‘ 3“ ft-in
74.5 m 244 ft	4.7 m 15‘ 5“ ft-in = 2.1 m (6‘ 11“ ft-in) + 2.6 m (8‘ 6“ ft-in)	1.6 m 5‘ 3“ ft-in
77.5 m 254 ft	5.6 m 18‘ 4“ ft-in = 3.0 m (9‘ 10“ ft-in) + 2.6 m (8‘ 6“ ft-in)	1.6 m 5‘ 3“ ft-in
80.5 m 264 ft	4.2 m 13‘ 9“ ft-in = 2.1 m (6‘ 11“ ft-in) + 2.1 m (6‘ 11“ ft-in)	1.6 m 5‘ 3“ ft-in
83.5 m 274 ft	4.2 m 13‘ 9“ ft-in = 2.1 m (6‘ 11“ ft-in) + 2.1 m (6‘ 11“ ft-in)	2.1 m 6‘ 11“ ft-in
86.5 m 284 ft	5.1 m 16‘ 9“ ft-in = 3.0 m (9‘ 10“ ft-in) + 2.1 m (6‘ 11“ ft-in)	2.1 m 6‘ 11“ ft-in
89.5 m 294 ft	4.7 m 15‘ 5“ ft-in = 2.1 m (6‘ 11“ ft-in) + 2.6 m (8‘ 6“ ft-in)	2.1 m 6‘ 11“ ft-in
92.5 m 304 ft	4.7 m 15‘ 5“ ft-in = 2.1 m (6‘ 11“ ft-in) + 2.6 m (8‘ 6“ ft-in)	2.1 m 6‘ 11“ ft-in

LWN/LR.x/V03.01//Auslieferung/2015-06-03/en

copyright by
LIEBHERR

Main boom length	Backstay pendant 1 (X1)	Backstay pendant 2 (X2)
	Rope length	Rope length
95.5 m 313 ft	4.2 m 13‘ 9“ ft-in = 2.1 m (6‘ 11“ ft-in) + 2.1 m (6‘ 11“ ft-in)	1.6 m 5‘ 3“ ft-in
98.5 m 323 ft	5.6 m 18‘ 4“ ft-in = 3.0 m (9‘ 10“ ft-in) + 2.6 m (8‘ 6“ ft-in)	2.1 m 6‘ 11“ ft-in
101.5 m 333 ft	5.1 m 16‘ 9“ ft-in = 3.0 m (9‘ 10“ ft-in) + 2.1 m (6‘ 11“ ft-in)	1.6 m 5‘ 3“ ft-in
104.5 m 343 ft	5.1 m 16‘ 9“ ft-in = 3.0 m (9‘ 10“ ft-in) + 2.1 m (6‘ 11“ ft-in)	2.6 m 8‘ 6“ ft-in
107.5 m 353 ft	4.7 m 15‘ 5“ ft-in = 2.1 m (6‘ 11“ ft-in) + 2.6 m (8‘ 6“ ft-in)	2.1 m 6‘ 11“ ft-in
110.5 m 363 ft	5.6 m 18‘ 4“ ft-in = 3.0 m (9‘ 10“ ft-in) + 2.6 m (8‘ 6“ ft-in)	2.6 m 8‘ 6“ ft-in

Tab. 558: Lengths of jib mid-point suspensions - 2316 luffing jib + 2316 Midfall

7.23.3 Configuration of main boom

DANGER
Excess length of main boom!
Structural breakdown.

▶ Check main boom length in load chart for validity.

Note

▶ See system-relevant data of main boom for information on main boom configuration (For more information see: 7.5.1 Configuration of main boom, page 1230) .

LWN/LR.x/V03.01//Auslieferung/2015-06-03/en

copyright by
LIEBHERR

7.23.4 Overview of steel pendant straps on luffing jib 2316 + midfall 2316

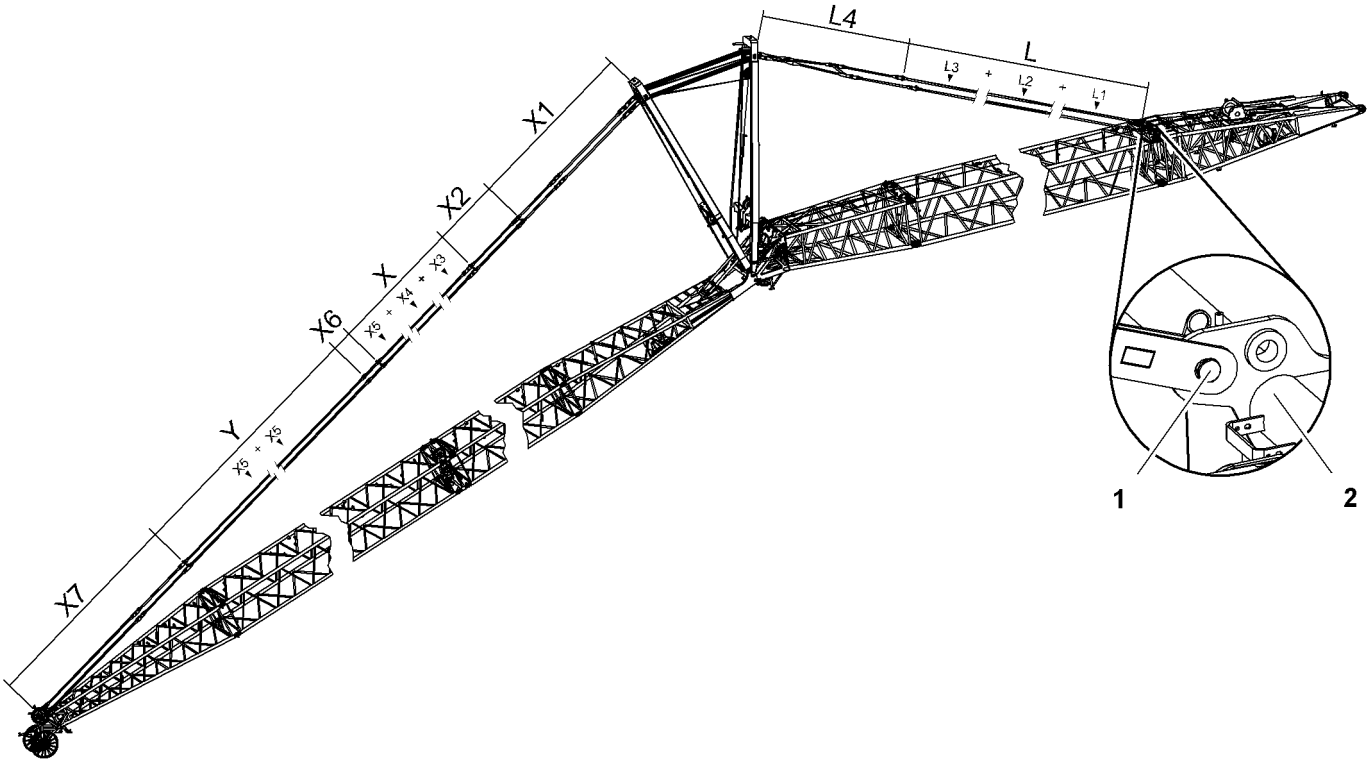

Fig. 5420: Overview of steel pendant straps on luffing jib 2316 + midfall 2316

1 Pin connection point for jib backstay straps

2 Main boom base section

Jib backstay straps A-frame2 to main boom base section 2821

Name			Value
L	**Jib backstay straps** consisting of:		Total **L1** + Total **L2** + Total **L3**
	L1	**Jib backstay strap 3 m (10 ft)** (For more information see: Jib backstay strap 3 m (10 ft), page 191)	
	L2	**Jib backstay strap 6 m (20 ft)** (For more information see: Jib backstay strap 6 m (20 ft), page 193)	
	L3	**Jib backstay strap 12 m (40 ft)** (For more information see: Jib backstay strap 12 m (40 ft), page 195)	
L4	**A-frame2 equalizer (jib backstay strap)** (For more information see: Equalizer A-frame2 (jib backstay strap), page 305)		8050 mm 26‘ 5“ ft-in

Tab. 559: Jib backstay straps A-frame2 to main boom base section 2821

Configuration of jib backstay straps (L):

Required number of jib backstay straps 3 m (10 ft) (**L1**) corresponds to number of main boom sections 3 m (10 ft).

LWN/LR.x/V03.01//Auslieferung/2015-06-03/en

copyright by LIEBHERR

Required number of jib backstay straps 6 m (20 ft) (**L2**) corresponds to number of main boom sections 6 m (20 ft).

Required number of jib backstay straps 12 m (40 ft) (**L3**) corresponds to number of main boom sections 12 m (40 ft).

Note

▶ For the admissible number of main boom sections 3 m (10 ft), 6 m (20 ft), 12 m (40 ft), refer to the load chart.

Pendant straps A-frame3 to jib head 2316

Name			Value
X1	**A-frame3 equalizer (jib pendant strap)** (For more information see: A-frame3 equalizer (jib pendant strap), page 306)		7850 mm 25‘ 9“ ft-in
X2	**Jib pendant strap 3 m (10 ft)** (For more information see: Jib pendant strap 3 m (10 ft), page 304)		3000 mm 9‘ 10“ ft-in
X	**Jib pendant straps** consisting of:		Total **X3** + Total **X4** + Total **X5**
	X3	**Jib pendant strap 3 m (10 ft)** (For more information see: Jib pendant strap 3 m (10 ft), page 308)	
	X4	**Jib pendant strap 6 m (20 ft)** (For more information see: Jib pendant strap 6 m (20 ft), page 308)	
	X5	**Jib pendant strap 12 m (40 ft)** (For more information see: Jib pendant strap 12 m (40 ft), page 309)	
X6	**Midfall connecting link** (For more information see: Midfall connecting link, page 365)		920 mm 3‘ ft-in
Y	**Jib pendant straps** consisting of:		Total **X5**
	X5	**Jib pendant strap 12 m (40 ft)** (For more information see: Jib pendant strap 12 m (40 ft), page 309)	
X7	**Jib pendant strap on jib head 2316** (For more information see: Jib pendant strap on jib head 2316.20, page 310)		9180 mm 30‘ 1“ ft-in

Tab. 560: Pendant straps A-frame3 to jib head 2316

Configuration of jib pendant straps (X):

Required number of jib pendant straps 3 m (10 ft) (**X3**) corresponds to number of jib sections 3 m (10 ft).

Required number of jib pendant straps 6 m (20 ft) (**X4**) corresponds to number of jib sections 6 m (20 ft).

Required number of jib pendant straps 12 m (40 ft) (**X5**) corresponds to number of jib sections 12 m (40 ft).

LWN/LR.x/V03.01//Auslieferung/2015-06-03/en

copyright by
LIEBHERR

Note

▶ For the admissible number of jib sections 3 m (10 ft), 6 m (20 ft), 12 m (40 ft), refer to the following table: (For more information see: 7.23.1 Configuration of jib, page 1668)

7.23.5 Overview of CF pendant straps on luffing jib 2316 + midfall 2316

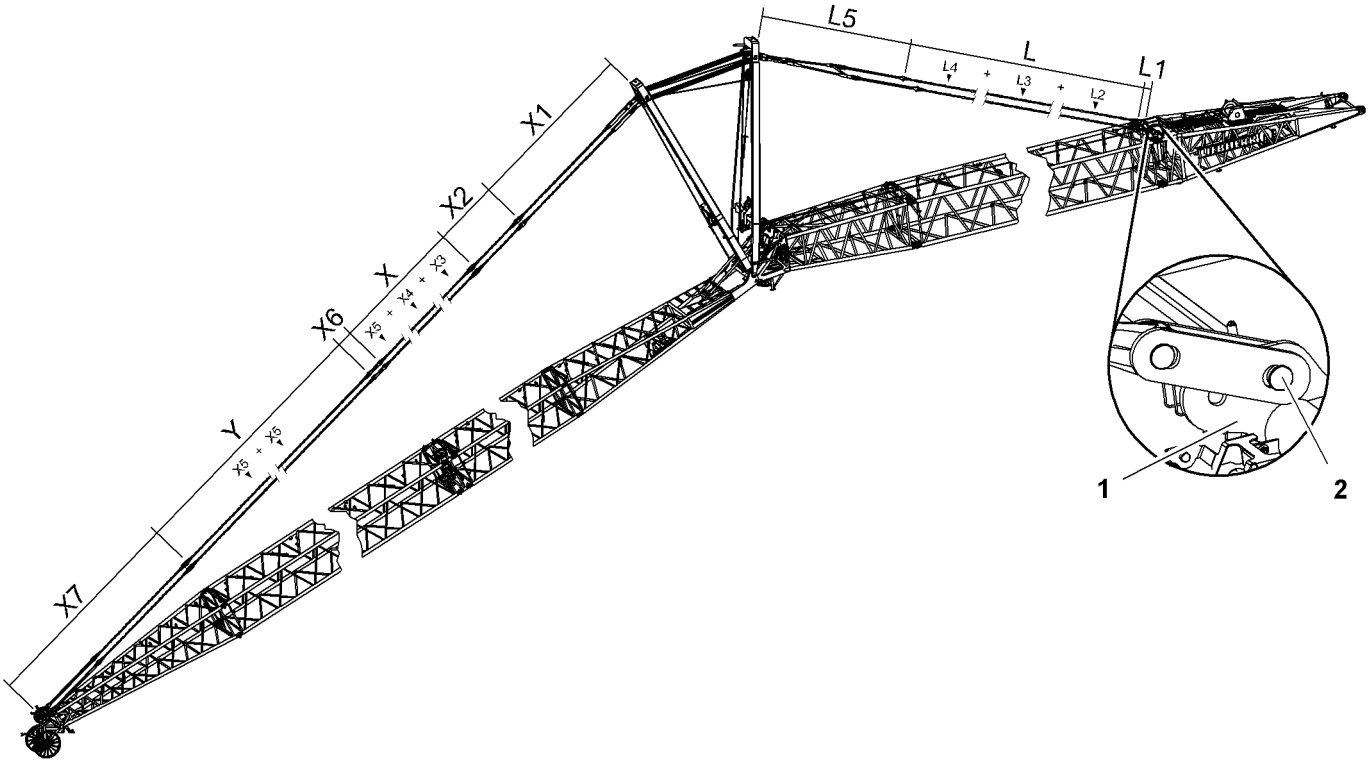

Fig. 5421: Overview of CF pendant straps on luffing jib 2316 + midfall 2316

1 Main boom base section

2 Pin connection point for jib backstay straps

Jib backstay straps A-frame2 to main boom base section 2821

Name			Value
L1	**Connecting link** (For more information see: Connecting link, page 200)		350 mm 1‘ 2“ ft-in
L	**Jib backstay straps** consisting of:		
	L2	**Jib backstay strap 3 m (10 ft)** (For more information see: Jib backstay strap 3 m (10 ft), page 202)	Total **L2** +
	L3	**Jib backstay strap 6 m (20 ft)** (For more information see: Jib backstay strap 6 m (20 ft), page 206)	Total **L3** +
	L4	**Jib backstay strap 12 m (40 ft)** (For more information see: Jib backstay strap 12 m (40 ft), page 210)	Total **L4**

LWN/LR.x/V03.01//Auslieferung/2015-06-03/en

copyright by LIEBHERR

Name		Value
L5	**A-frame2 equalizer (jib backstay strap)** (For more information see: Equalizer A-frame2 (jib backstay strap), page 313)	7769 mm 25‘ 6“ ft-in

Tab. 561: Jib backstay straps A-frame2 to main boom base section 2821

Configuration of jib backstay straps (L):

Required number of jib backstay straps 3 m (10 ft) (**L2**) corresponds to number of main boom sections 3 m (10 ft).

Required number of jib backstay straps 6 m (20 ft) (**L3**) corresponds to number of main boom sections 6 m (20 ft).

Required number of jib backstay straps 12 m (40 ft) (**L4**) corresponds to number of main boom sections 12 m (40 ft).

Note

▶ For the admissible number of main boom sections 3 m (10 ft), 6 m (20 ft), 12 m (40 ft), refer to the load chart.

The jib backstay straps **(L)** may consist of generation A and generation B jib backstay straps (For more information see: 1.11.9 CF pendant straps on main boom 2821, page 198) . Mixing is only admissible if the number of generation B jib backstay straps only differs by at most 1 in the left and the right strand of the jib backstay straps.

DANGER
Inadmissible mixing of generation A and generation B jib backstay straps!
Structural failure.

▶ Ensure that the number of generation B jib backstay straps differs by at most 1 in the left and the right strand of the jib backstay straps.

Pendant straps A-frame3 to jib head 2316

Name			Value
X1	**A-frame3 equalizer (jib pendant strap)** (For more information see: A-frame3 equalizer (jib pendant strap), page 315)		7850 mm 25‘ 9“ ft-in
X2	**Jib pendant strap 3 m (10 ft)** (For more information see: Jib pendant strap 3 m (10 ft), page 312)		3000 mm 9‘ 10“ ft-in
X	**Jib pendant straps** consisting of:		Total **X3** + Total **X4** + Total **X5**
	X3	**Jib pendant strap 3 m (10 ft)** (For more information see: Jib pendant strap 3 m (10 ft), page 317)	
	X4	**Jib pendant strap 6 m (20 ft)** (For more information see: Jib pendant strap 6 m (20 ft), page 319)	
	X5	**Jib pendant strap 12 m (40 ft)** (For more information see: Jib pendant strap 12 m (40 ft), page 320)	

LWN/LR.x/V03.01//Auslieferung/2015-06-03/en

copyright by LIEBHERR

Name			Value
X6	**Midfall connecting link** (For more information see: Midfall connecting link, page 366)		700 mm 2‘ 4“ ft-in
Y	**Jib pendant straps** consisting of:		Total **X5**
	X5	**Jib pendant strap 12 m (40 ft)** (For more information see: Jib pendant strap 12 m (40 ft), page 320)	
X7	**Jib pendant strap on jib head 2316** (For more information see: Jib pendant strap on jib head 2316.20, page 322)		9540 mm 31‘ 4“ ft-in

Tab. 562: Pendant straps A-frame3 to jib head 2316

Configuration of jib pendant straps (X):

Required number of jib pendant straps 3 m (10 ft) (**X3**) corresponds to number of jib sections 3 m (10 ft).

Required number of jib pendant straps 6 m (20 ft) (**X4**) corresponds to number of jib sections 6 m (20 ft).

Required number of jib pendant straps 12 m (40 ft) (**X5**) corresponds to number of jib sections 12 m (40 ft).

Note

▶ For the admissible number of jib sections 3 m (10 ft), 6 m (20 ft), 12 m (40 ft), refer to the following table: (For more information see: 7.23.1 Configuration of jib, page 1668)

The jib pendant straps **(X)** may consist of generation A and generation B jib pendant straps (For more information see: 1.20.8 CF pendant straps on luffing jib 2316, page 312) . Mixing is only admissible if the number of generation B jib pendant straps only differs by at most 1 in the left and the right strand of the jib pendant straps.

DANGER
Inadmissible mixing of generation A and generation B jib pendant straps!
Structural failure.

▶ Ensure that the number of generation B jib pendant straps differs by at most 1 in the left and the right strand of the jib pendant straps.

LWN/LR.x/V03.01//Auslieferung/2015-06-03/en

copyright by
LIEBHERR

7.23.6 Reeving diagrams for one rope across jib head 2316 (load position1)

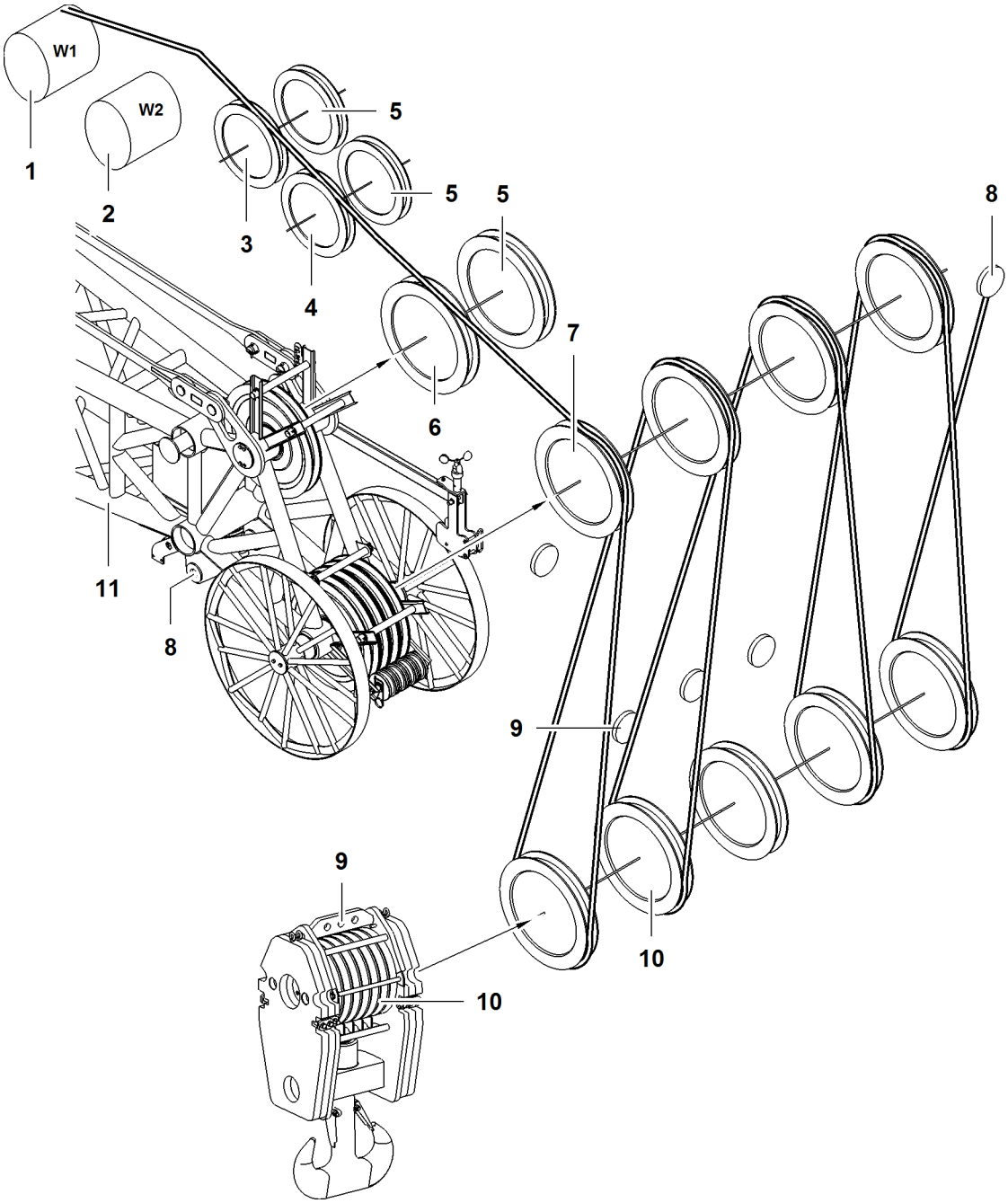

Fig. 5422: Reeving diagrams for one rope across jib head 2316 (load position1)

1	Winch1	**5**	Retrofit kit* for operation with two ropes across jib head	**9**	Rope fixing points of pulley block
2	Winch2	**6**	Gantry pulley of jib head	**10**	Pulley set of pulley block
3	Pulley of A-frame2	**7**	Pulley (4x) of jib head	**11**	Jib head
4	Pulley of A-frame3	**8**	Rope fixing point of jib head		

LWN/LR.x/V03.01//Auslieferung/2015-06-03/en

copyright by LIEBHERR

DANGER
Inadmissible number of reevings!
Structural breakdown, toppling of machine.

▶ Choose correct number of reevings as indicated in load chart.

Reeving diagrams for one rope across jib head 2316 (load position1)	
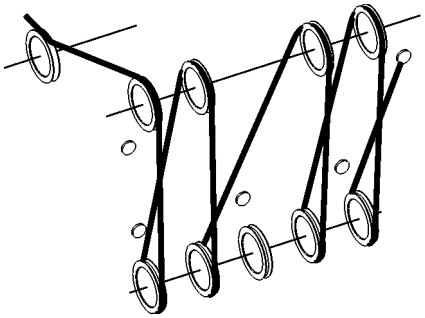 8x	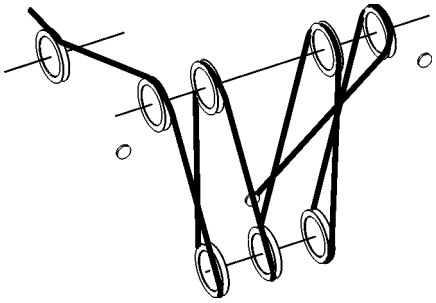 7x
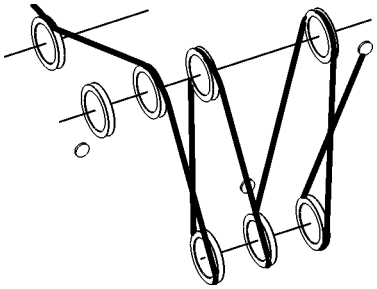 6x	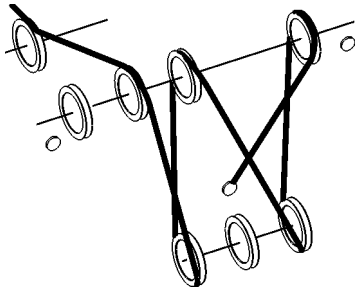 5x
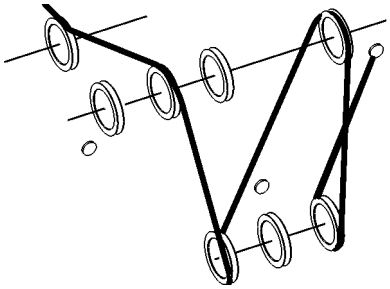 4x	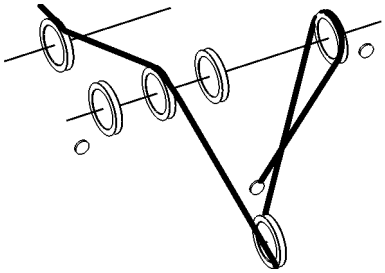 3x
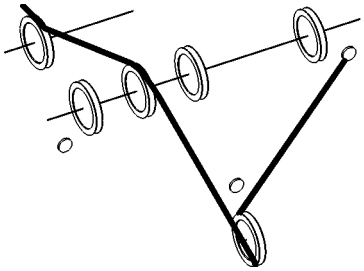 2x	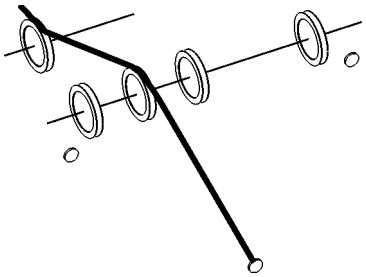 1x

Tab. 563: Reeving diagrams for one rope across jib head 2316 (load position1)

LWN/LR.x/V03.01//Auslieferung/2015-06-03/en

copyright by LIEBHERR

7.23.7 Reeving diagrams for one rope across midfall 2316 (load position3)

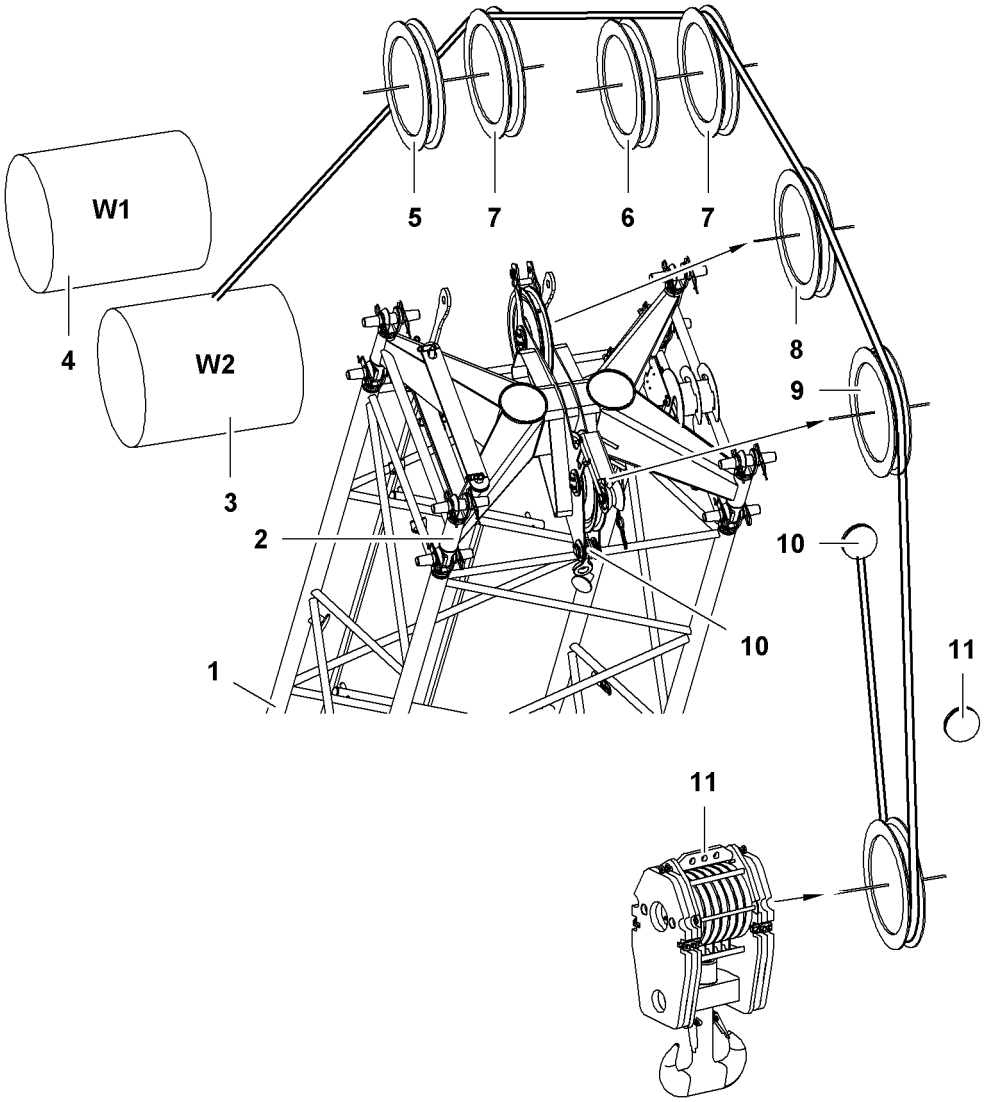

Fig. 5431: Reeving diagrams for one rope across midfall 2316 (load position3)

1	Jib	**7**	Retrofit kit* for operation with two ropes across jib head
2	Midfall	**8**	Top pulley of midfall
3	Winch2	**9**	Bottom pulley of midfall
4	Winch1	**10**	Rope fixing point of midfall
5	Pulley of A-frame2	**11**	Rope fixing points of pulley block
6	Pulley of A-frame3		

DANGER
Inadmissible number of reevings!
Structural breakdown, toppling of machine.

▶ Choose correct number of reevings as indicated in load chart.

LWN/LR.x/V03.01//Auslieferung/2015-06-03/en

copyright by LIEBHERR

Reeving diagrams for one rope across midfall 2316 (load position3)	
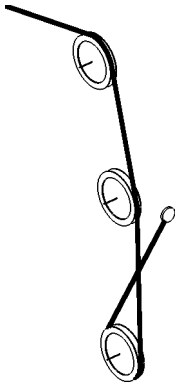 2x	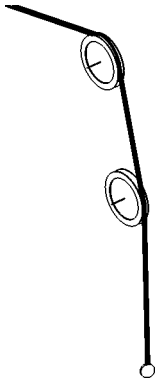 1x

Tab. 564: Reeving diagrams for one rope across midfall 2316 (load position3)

LWN/LR.x/V03.01//Auslieferung/2015-06-03/en

copyright by
LIEBHERR

7.24 Luffing jib 1916 + midfall 1916

System-relevant information for luffing jib 1916 + midfall 1916:
- Configuration of jib
  - Mid-point suspensions installation positions
- Lengths of jib mid-point suspensions
- Configuration of main boom
- Overview of steel pendant straps on luffing jib 1916 + midfall 1916
- Overview of CF pendant straps on luffing jib 1916 + midfall 1916
- Reeving diagrams for one rope across jib head 1916 (load position1)
- Reeving diagrams for one rope across midfall 1916 (load position3)

7.24.1 Configuration of jib

DANGER
Excess length of jib!
Structural breakdown.

▶ Check jib length in load chart for validity.

Jib length	Position of midfall	Configuration of jib (symbolic)
32.5 m 107 ft	13 m 42‘ 8“ ft-in	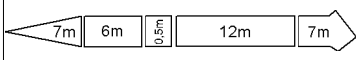
35.5 m 116 ft	16 m 52‘ 6“ ft-in	
38.5 m 126 ft	19 m 62‘ 4“ ft-in	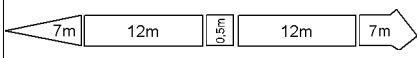
41.5 m 136 ft	22 m 72‘ 2“ ft-in	
44.5 m 146 ft	25 m 82‘ ft-in	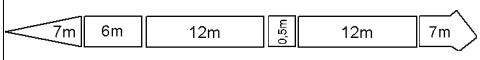
47.5 m 156 ft	28 m 91‘ 10“ ft-in	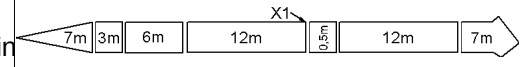
50.5 m 166 ft	19 m 62‘ 4“ ft-in	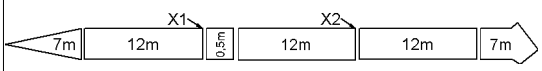
53.5 m 176 ft	22 m 72‘ 2“ ft-in	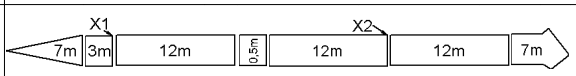
56.5 m 185 ft	25 m 82‘ ft-in	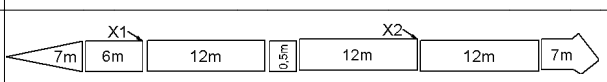
59.5 m 195 ft	28 m 91‘ 10“ ft-in	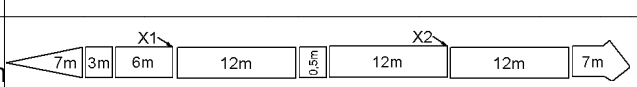
62.5 m 205 ft	31 m 101‘ 8“ ft-in	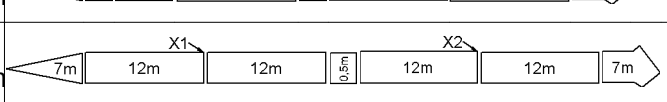
65.5 m 215 ft	34 m 111‘ 7“ ft-in	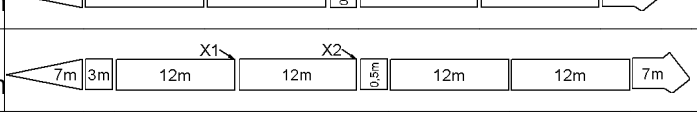

LWN/LR.x/V03.01//Auslieferung/2015-06-03/en

copyright by
LIEBHERR

Jib length	Position of midfall	Configuration of jib (symbolic)
68.5 m 225 ft	37 m 121‘ 5“ ft-in	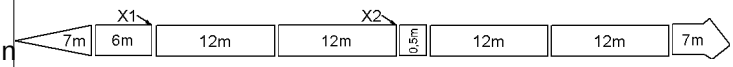
71.5 m 235 ft	40 m 131‘ 3“ ft-in	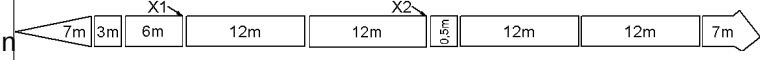
74.5 m 244 ft	43 m 141‘ 1“ ft-in	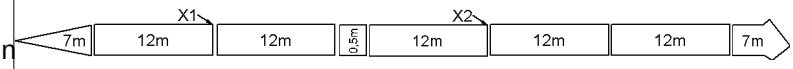
77.5 m 254 ft	34 m 111‘ 7“ ft-in	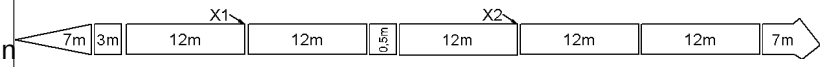
80.5 m 264 ft	37 m 121‘ 5“ ft-in	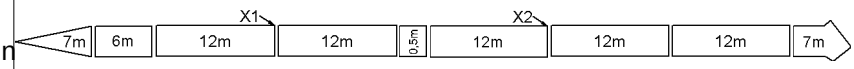
83.5 m 274 ft	40 m 131‘ 3“ ft-in	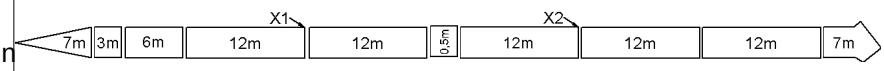
86.5 m 284 ft	43 m 141‘ 1“ ft-in	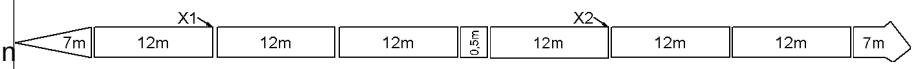
89.5 m 294 ft	46 m 150‘ 11“ ft-in	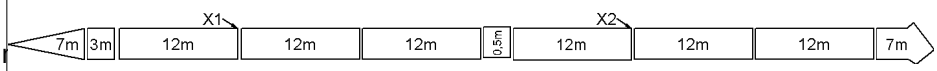
92.5 m 304 ft	49 m 160‘ 9“ ft-in	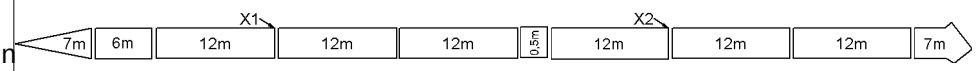
95.5 m 313 ft	52 m 170‘ 7“ ft-in	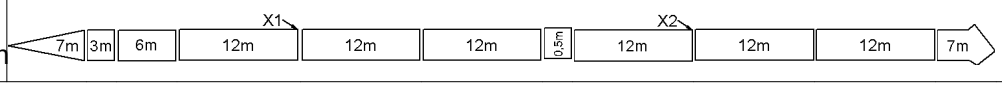

Tab. 565: Configuration of luffing jib 1916 + midfall 1916

X1 - Installation position mid-point suspension 1

X2 - Installation position mid-point suspension 2

7.24.2 Lengths of jib mid-point suspensions

Jib length	Backstay pendant 1 (X1)	Backstay pendant 2 (X2)
	Rope length	Rope length
47.5 m 156 ft	2.1 m 6‘ 11“ ft-in	
50.5 m 166 ft	4.2 m 13‘ 9“ ft-in = 2.6 m (8‘ 6“ ft-in) + 1.6 m (5‘ 3“ ft-in)	2.1 m 6‘ 11“ ft-in
53.5 m 176 ft	6.0 m 19‘ 8“ ft-in = 3.0 m (9‘ 10“ ft-in) + 3.0 m (9‘ 10“ ft-in)	2.1 m 6‘ 11“ ft-in
56.5 m 185 ft	5.6 m 18‘ 4“ ft-in = 3.0 m (9‘ 10“ ft-in) + 2.6 m (8‘ 6“ ft-in)	1.6 m 5‘ 3“ ft-in

LWN/LR.x/V03.01//Auslieferung/2015-06-03/en

copyright by LIEBHERR

Jib length	Backstay pendant 1 (X1)	Backstay pendant 2 (X2)
	Rope length	Rope length
59.5 m 195 ft	5.2 m 17‘ 1“ ft-in = 2.6 m (8‘ 6“ ft-in) + 2.6 m (8‘ 6“ ft-in)	1.6 m 5‘ 3“ ft-in
62.5 m 205 ft	4.7 m 15‘ 5“ ft-in = 2.6 m (8‘ 6“ ft-in) + 2.1 m (6‘ 11“ ft-in)	1.6 m 5‘ 3“ ft-in
65.5 m 215 ft	4.6 m 15‘ 1“ ft-in = 3.0 m (9‘ 10“ ft-in) + 1.6 m (5‘ 3“ ft-in)	3.0 m 9‘ 10“ ft-in
68.5 m 225 ft	6.0 m 19‘ 8“ ft-in = 3.0 m (9‘ 10“ ft-in) + 3.0 m (9‘ 10“ ft-in)	2.6 m 8‘ 6“ ft-in
71.5 m 235 ft	5.2 m 17‘ 1“ ft-in = 2.6 m (8‘ 6“ ft-in) + 2.6 m (8‘ 6“ ft-in)	2.1 m 6‘ 11“ ft-in
74.5 m 244 ft	5.1 m 16‘ 9“ ft-in = 3.0 m (9‘ 10“ ft-in) + 2.1 m (6‘ 11“ ft-in)	2.1 m 6‘ 11“ ft-in
77.5 m 254 ft	4.7 m 15‘ 5“ ft-in = 2.6 m (8‘ 6“ ft-in) + 2.1 m (6‘ 11“ ft-in)	2.1 m 6‘ 11“ ft-in
80.5 m 264 ft	4.2 m 13‘ 9“ ft-in = 2.1 m (6‘ 11“ ft-in) + 2.1 m (6‘ 11“ ft-in)	1.6 m 5‘ 3“ ft-in
83.5 m 274 ft	4.2 m 13‘ 9“ ft-in = 2.1 m (6‘ 11“ ft-in) + 2.1 m (6‘ 11“ ft-in)	1.6 m 5‘ 3“ ft-in
86.5 m 284 ft	5.2 m 17‘ 1“ ft-in = 2.6 m (8‘ 6“ ft-in) + 2.6 m (8‘ 6“ ft-in)	1.6 m 5‘ 3“ ft-in
89.5 m 294 ft	4.7 m 15‘ 5“ ft-in = 2.6 m (8‘ 6“ ft-in) + 2.1 m (6‘ 11“ ft-in)	1.6 m 5‘ 3“ ft-in

LWN/LR.x/V03.01//Auslieferung/2015-06-03/en

copyright by
LIEBHERR

Jib length	Backstay pendant 1 (X1)	Backstay pendant 2 (X2)
	Rope length	Rope length
92.5 m 304 ft	4.2 m 13‘ 9“ ft-in = 2.1 m (6‘ 11“ ft-in) + 2.1 m (6‘ 11“ ft-in)	1.6 m 5‘ 3“ ft-in
95 m 312 ft	= 4.2 m (13‘ 9“ ft-in) = 2.1 m (6‘ 11“ ft-in) + 2.1 m (6‘ 11“ ft-in)	1.6 m 5‘ 3“ ft-in

Tab. 566: Lengths of jib mid-point suspensions - 1916 luffing jib + 1916 Midfall

7.24.3 Configuration of main boom

DANGER
Excess length of main boom!
Structural breakdown.

▶ Check main boom length in load chart for validity.

Note

▶ See system-relevant data of main boom for information on main boom configuration (For more information see: 7.5.1 Configuration of main boom, page 1230) .

LWN/LR.x/V03.01//Auslieferung/2015-06-03/en

copyright by
LIEBHERR

7.24.4 Overview of steel pendant straps on luffing jib 1916 + midfall 1916

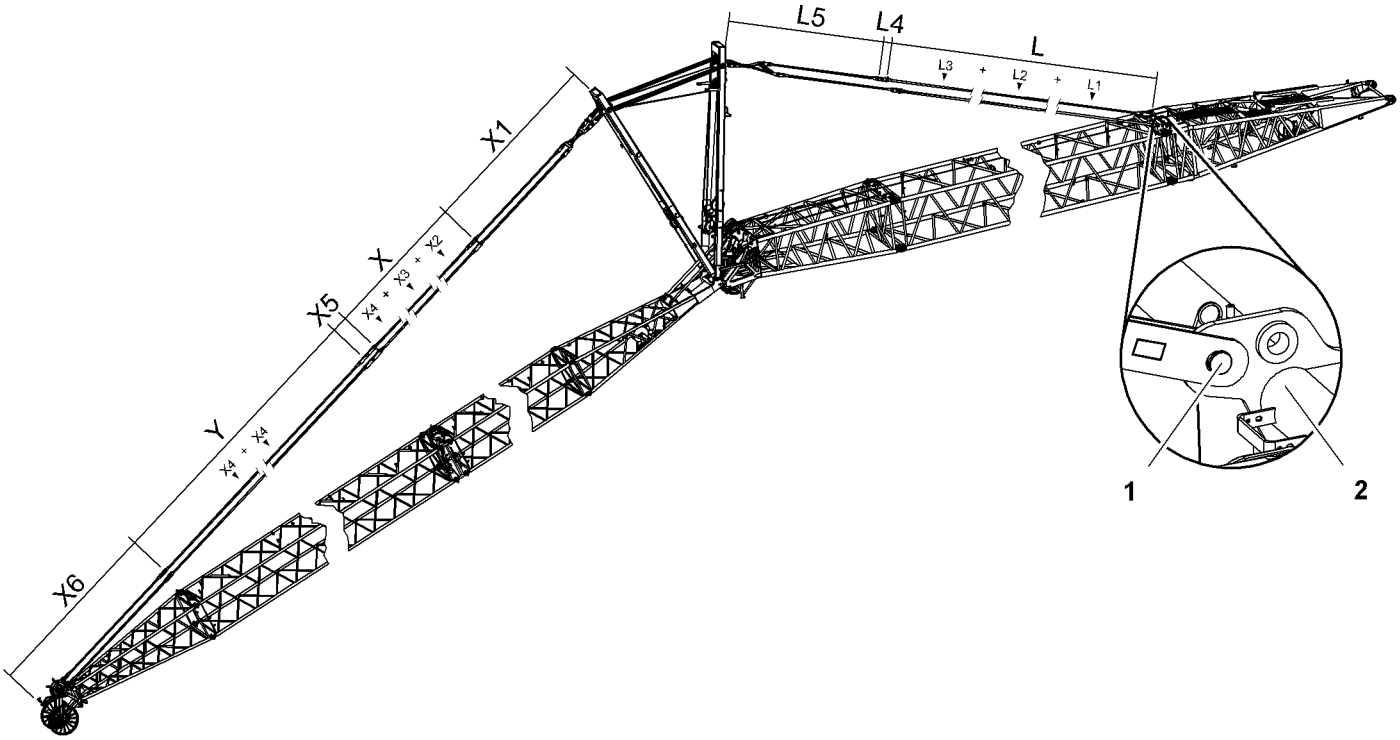

Fig. 5605: Overview of steel pendant straps on luffing jib 1916 + midfall 1916

1 Pin connection point for jib backstay straps

2 Main boom base section

Jib backstay straps A-frame2 to main boom base section 2821

Name			Value
L	**Jib backstay straps** consisting of:		Total **L1** + Total **L2** + Total **L3**
	L1	**Jib backstay strap 3 m (10 ft)** (For more information see: Jib backstay strap 3 m (10 ft), page 191)	
	L2	**Jib backstay strap 6 m (20 ft)** (For more information see: Jib backstay strap 6 m (20 ft), page 193)	
	L3	**Jib backstay strap 12 m (40 ft)** (For more information see: Jib backstay strap 12 m (40 ft), page 195)	
L4	**Connecting link (conversion kit)** (For more information see: Connecting link (conversion kit), page 349)		390 mm 1‘ 3“ ft-in
L5	**A-frame2 equalizer (jib backstay strap)** (For more information see: Equalizer A-frame2 (jib backstay strap), page 343)		7409 mm 24‘ 4“ ft-in

Tab. 567: Jib backstay straps A-frame2 to main boom base section 2821

Configuration of jib backstay straps (L):

LWN/LR.x/V03.01//Auslieferung/2015-06-03/en

copyright by LIEBHERR

Required number of jib backstay straps 3 m (10 ft) (**L1**) corresponds to number of main boom sections 3 m (10 ft).

Required number of jib backstay straps 6 m (20 ft) (**L2**) corresponds to number of main boom sections 6 m (20 ft).

Required number of jib backstay straps 12 m (40 ft) (**L3**) corresponds to number of main boom sections 12 m (40 ft).

Note

▶ For the admissible number of main boom sections 3 m (10 ft), 6 m (20 ft), 12 m (40 ft), refer to the load chart.

Pendant straps A-frame3 to jib head 1916

Name			Value
X1	**A-frame3 equalizer (jib pendant strap)** (For more information see: A-frame3 equalizer (jib pendant strap), page 344)		7190 mm 23‘ 7“ ft-in
X	**Jib pendant straps** consisting of:		Total **X2** + Total **X3** + Total **X4**
	X2	**Jib pendant strap 3 m (10 ft)** (For more information see: Jib pendant strap 3 m (10 ft), page 346)	
	X3	**Jib pendant strap 6 m (20 ft)** (For more information see: Jib pendant strap 6 m (20 ft), page 347)	
	X4	**Jib pendant strap 12 m (40 ft)** (For more information see: Jib pendant strap 12 m (40 ft), page 347)	
X5	**Midfall connecting link** (For more information see: Midfall connecting link, page 370)		890 mm 2‘ 11“ ft-in
Y	**Jib pendant straps** consisting of:		Total **X4**
	X4	**Jib pendant strap 12 m (40 ft)** (For more information see: Jib pendant strap 12 m (40 ft), page 347)	
X6	**Jib pendant strap on jib head 1916** (For more information see: Jib pendant strap on jib head 1916.21, page 348)		6500 mm 21‘ 4“ ft-in

Tab. 568: Pendant straps A-frame3 to jib head 1916

Configuration of jib pendant straps (X):

Required number of jib pendant straps 3 m (10 ft) (**X2**) corresponds to number of jib sections 3 m (10 ft).

Required number of jib pendant straps 6 m (20 ft) (**X3**) corresponds to number of jib sections 6 m (20 ft).

Required number of jib pendant straps 12 m (40 ft) (**X4**) corresponds to number of jib sections 12 m (40 ft).

LWN/LR.x/V03.01/Auslieferung/2015-06-03/en

copyright by LIEBHERR

Note

▶ For the admissible number of jib sections 3 m (10 ft), 6 m (20 ft), 12 m (40 ft), refer to the following table: (For more information see: 7.24.1 Configuration of jib, page 1681)

7.24.5 Overview of CF pendant straps on luffing jib 1916 + midfall 1916

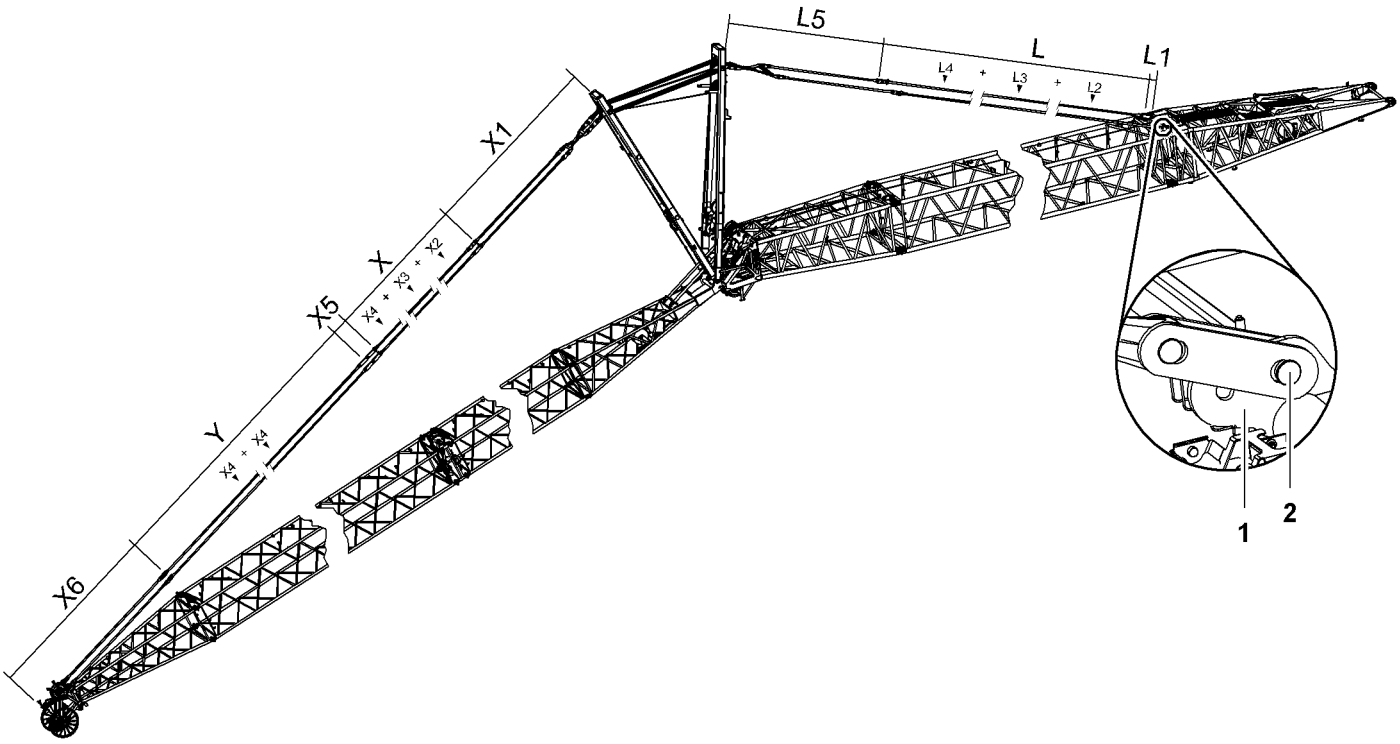

Fig. 5606: Overview of CF pendant straps on luffing jib 1916 + midfall 1916

1 Main boom base section

2 Pin connection point for jib backstay straps

Jib backstay straps A-frame2 to main boom base section 2821

Name			Value
L1	**Connecting link** (For more information see: Connecting link, page 200)		270 mm 10.63“ in
L	**Jib backstay straps** consisting of:		Total **L2** + Total **L3** + Total **L4**
	L2	**Jib backstay strap 3 m (10 ft)** (For more information see: Jib backstay strap 3 m (10 ft), page 202)	
	L3	**Jib backstay strap 6 m (20 ft)** (For more information see: Jib backstay strap 6 m (20 ft), page 206)	
	L4	**Jib backstay strap 12 m (40 ft)** (For more information see: Jib backstay strap 12 m (40 ft), page 210)	

LWN/LR.x/V03.01//Auslieferung/2015-06-03/en

copyright by LIEBHERR

Name		Value
L5	**A-frame2 equalizer (jib backstay strap)** (For more information see: Equalizer A-frame2 (jib backstay strap), page 350)	7769 mm 25‘ 6“ ft-in

Tab. 569: Jib backstay straps A-frame2 to main boom base section 2821

Configuration of jib backstay straps (L):

Required number of jib backstay straps 3 m (10 ft) (**L2**) corresponds to number of main boom sections 3 m (10 ft).

Required number of jib backstay straps 6 m (20 ft) (**L3**) corresponds to number of main boom sections 6 m (20 ft).

Required number of jib backstay straps 12 m (40 ft) (**L4**) corresponds to number of main boom sections 12 m (40 ft).

Note

▶ For the admissible number of main boom sections 3 m (10 ft), 6 m (20 ft), 12 m (40 ft), refer to the load chart.

The jib backstay straps **(L)** may consist of generation A and generation B jib backstay straps (For more information see: 1.11.9 CF pendant straps on main boom 2821, page 198) . Mixing is only admissible if the number of generation B jib backstay straps only differs by at most 1 in the left and the right strand of the jib backstay straps.

DANGER
Inadmissible mixing of generation A and generation B jib backstay straps!
Structural failure.

▶ Ensure that the number of generation B jib backstay straps differs by at most 1 in the left and the right strand of the jib backstay straps.

Pendant straps A-frame3 to jib head 1916

Name			Value
X1		**A-frame3 equalizer (jib pendant strap)** (For more information see: A-frame3 equalizer (jib pendant strap), page 352)	7550 mm 24‘ 9“ ft-in
X		**Jib pendant straps** consisting of:	Total **X2** + Total **X3** + Total **X4**
	X2	**Jib pendant strap 3 m (10 ft)** (For more information see: Jib pendant strap 3 m (10 ft), page 354)	
	X3	**Jib pendant strap 6 m (20 ft)** (For more information see: Jib pendant strap 6 m (20 ft), page 356)	
	X4	**Jib pendant strap 12 m (40 ft)** (For more information see: Jib pendant strap 12 m (40 ft), page 358)	
X5		**Midfall connecting link** (For more information see: Midfall connecting link, page 371)	700 mm 2‘ 4“ ft-in

LWN/LR.x/V03.01/Auslieferung/2015-06-03/en

copyright by LIEBHERR

Name			Value
Y	**Jib pendant straps** consisting of:		Total **X4**
	X4	**Jib pendant strap 12 m (40 ft)** (For more information see: Jib pendant strap 12 m (40 ft), page 358)	
X6	**Jib pendant strap on jib head 1916** (For more information see: Jib pendant strap on jib head 1916.21, page 359)		6500 mm 21‘ 4“ ft-in

Tab. 570: Pendant straps A-frame3 to jib head 1916

Configuration of jib pendant straps (X):

Required number of jib pendant straps 3 m (10 ft) (**X2**) corresponds to number of jib sections 3 m (10 ft).

Required number of jib pendant straps 6 m (20 ft) (**X3**) corresponds to number of jib sections 6 m (20 ft).

Required number of jib pendant straps 12 m (40 ft) (**X4**) corresponds to number of jib sections 12 m (40 ft).

Note

▶ For the admissible number of jib sections 3 m (10 ft), 6 m (20 ft), 12 m (40 ft), refer to the following table: (For more information see: 7.24.1 Configuration of jib, page 1681)

The jib pendant straps **(X)** may consist of generation A and generation B jib pendant straps (For more information see: 1.21.8 CF pendant straps on luffing jib 1916, page 350) . Mixing is only admissible if the number of generation B jib pendant straps only differs by at most 1 in the left and the right strand of the jib pendant straps.

DANGER
Inadmissible mixing of generation A and generation B jib pendant straps!
Structural failure.

▶ Ensure that the number of generation B jib pendant straps differs by at most 1 in the left and the right strand of the jib pendant straps.

LWN/LR.x/V03.01//Auslieferung/2015-06-03/en

copyright by
LIEBHERR

7.24.6 Reeving diagrams for one rope across jib head 1916 (load position1)

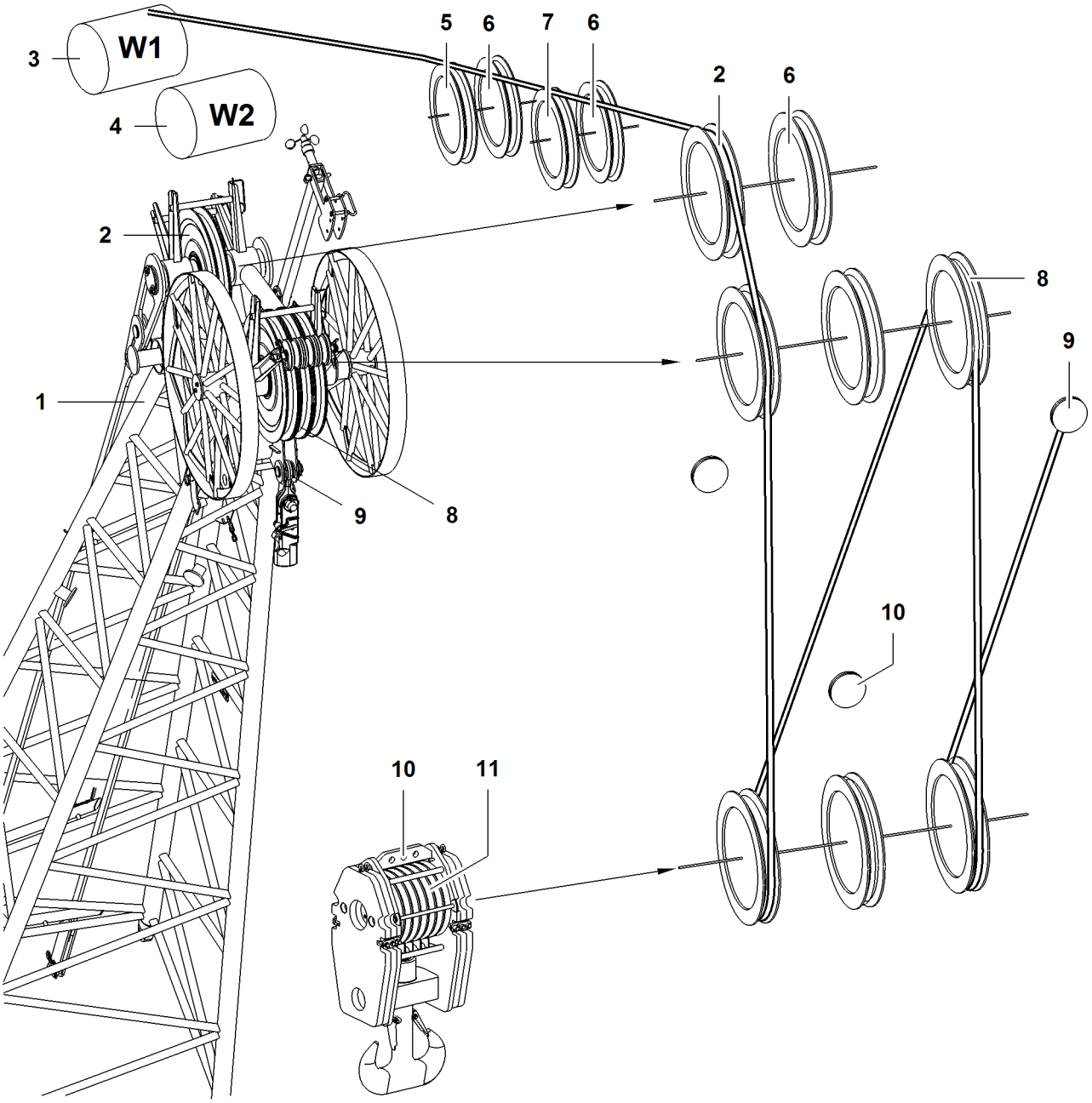

Fig. 5607: Reeving diagrams for one rope across jib head 1916 (load position1)

1	Jib head	**5**	Pulley of A-frame2	**9**	Rope fixing point of jib head
2	Gantry pulley of jib head	**6**	Retrofit kit* for operation with two ropes across jib head	**10**	Rope fixing points of pulley block
3	Winch1	**7**	Pulley of A-frame3	**11**	Pulley set of pulley block
4	Winch2	**8**	Pulley (3x) of jib head		

DANGER
Incorrect number of reevings!
Structural breakdown, toppling of machine.

▶ Choose the correct number of reevings as per the load chart.

LWN/LR.x/V03.01//Auslieferung/2015-06-03/en

copyright by
LIEBHERR

Reeving diagrams for one rope across jib head 1916 (load position1)	
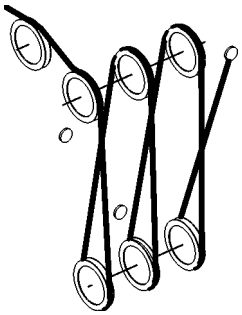 6x	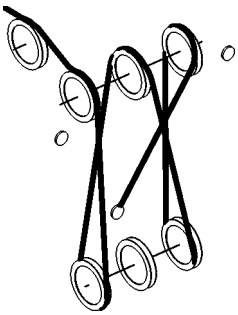 5x
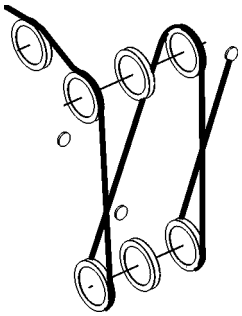 4x	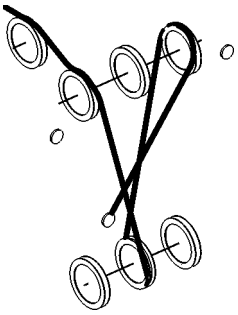 3x
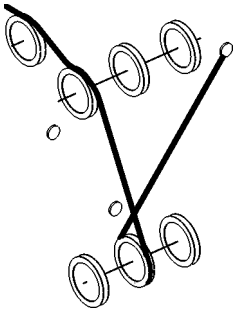 2x	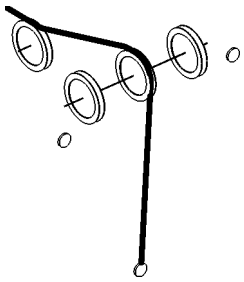 1x

Tab. 571: Reeving diagrams for one rope across jib head 1916 (load position1)

LWN/LR.x/V03.01//Auslieferung/2015-06-03/en

copyright by
LIEBHERR

7.24.7 Reeving diagrams for one rope across midfall 1916 (load position3)

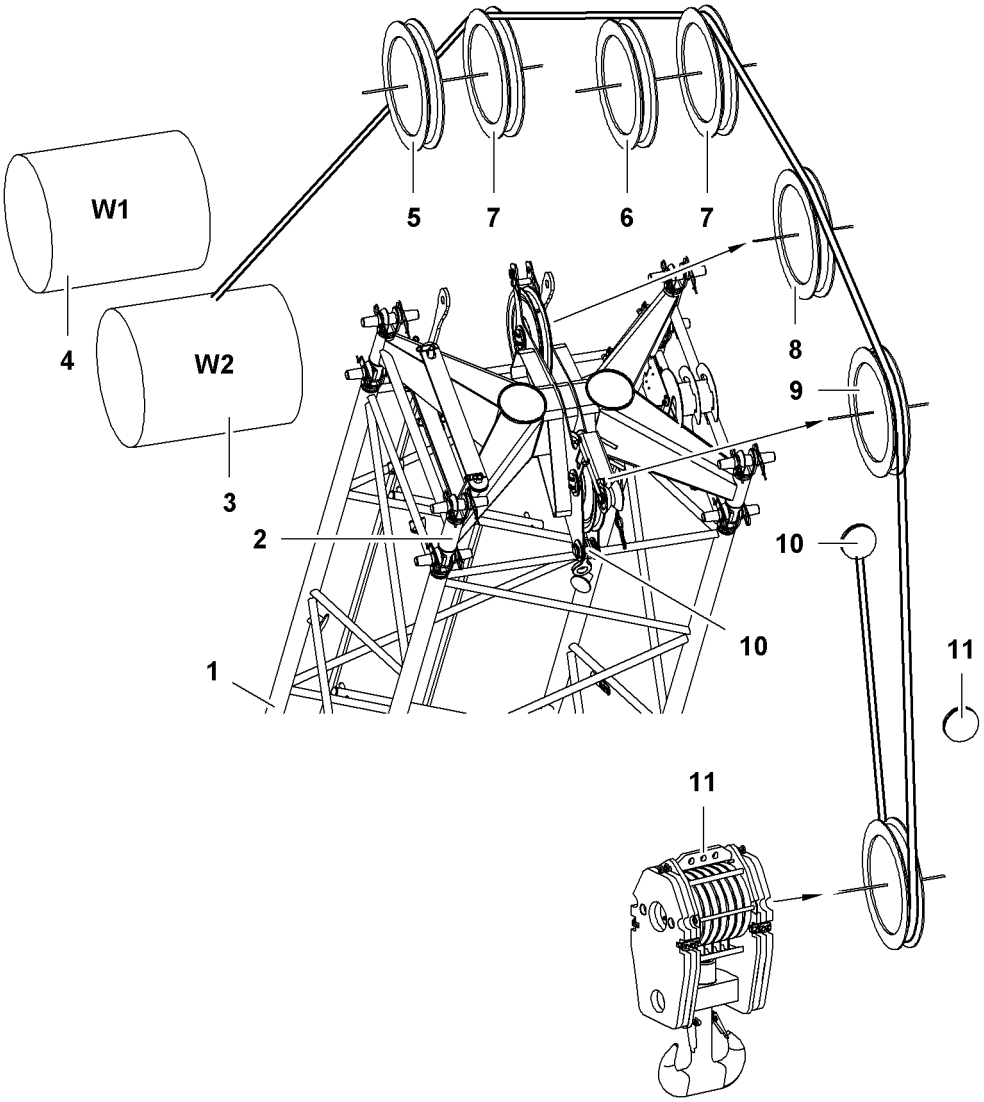

Fig. 5614: Reeving diagrams for one rope across midfall 1916 (load position3)

1	Jib	**7**	Retrofit kit* for operation with two ropes across jib head
2	Midfall	**8**	Top pulley of midfall
3	Winch2	**9**	Bottom pulley of midfall
4	Winch1	**10**	Rope fixing point of midfall
5	Pulley of A-frame2	**11**	Rope fixing points of pulley block
6	Pulley of A-frame3		

DANGER
Incorrect number of reevings!
Structural breakdown, toppling of machine.

▶ Choose the correct number of reevings as per the load chart.

LWN/LR.x/V03.01//Auslieferung/2015-06-03/en

copyright by LIEBHERR

Reeving diagrams for one rope across midfall 1916 (load position3)	
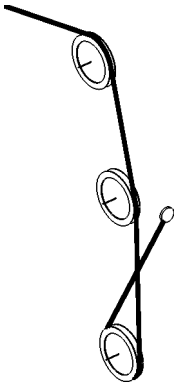 2x	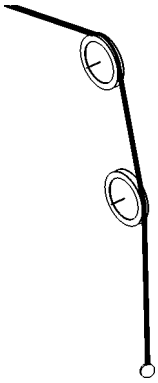 1x

Tab. 572: Reeving diagrams for one rope across midfall 1916 (load position3)

LWN/LR.x/V03.01//Auslieferung/2015-06-03/en

copyright by
LIEBHERR

7.25 Assembling the luffing jib + Midfall

Ensure that the following conditions are fulfilled:
- ❑ Assembly functions are switched on.
- ❑ The machine is ready for use as an assembly crane, or an assist crane is available.
- ❑ Work plans have been drawn up.
- ❑ The assembly position of the Midfall is known.
- ❑ Any accessories required are available.

7.25.1 Notes

The installation of the Midfall described below applies to all midfall system dimensions.

The illustrations have been simplified or schematically represented for reasons of uniformity and represent the principles of assembly. They do not provide a detailed representation of the components.

7.25.2 Installing the midfall

The assembly steps are identical to those for the luffing jib without Midfall. The following section only contains information specific to the installation of the Midfall. The remaining operations are to be carried out as described previously in the luffing jib assembly section.

DANGER
Midfall installed in the wrong position!
Structural breakdown.

▶ The assembly position for the Midfall can be found in the load chart.

Replacing the connecting links

▶ Install and bolt the Midfall in the prescribed position.

WARNING
Incorrect connecting links for pendant straps!

▶ Replace the connecting links of the jib pendant straps with Midfall connecting links.

LWN/LR.x/V03.01//Auslieferung/2015-06-03/en

copyright by
LIEBHERR

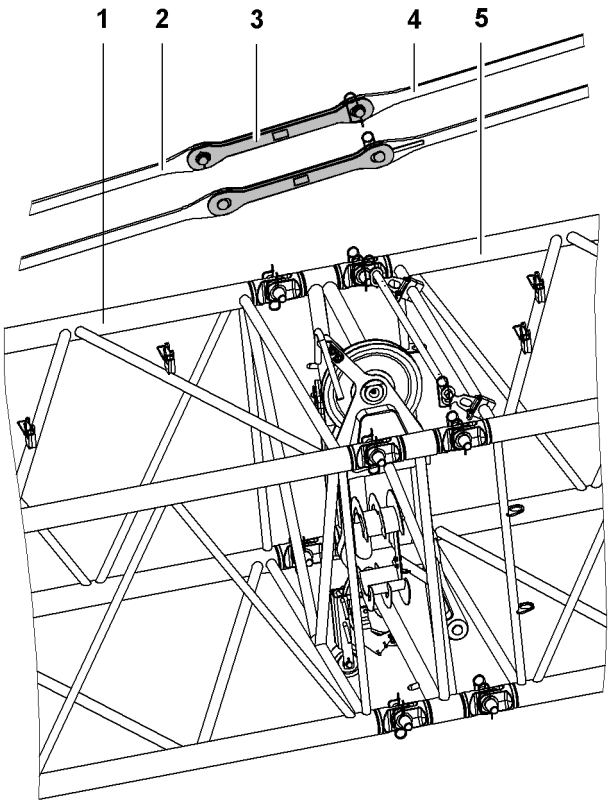

Fig. 5617: Replacing the midfall connecting links

1 Jib section
2 Jib pendant strap
3 Midfall connecting link
4 Jib pendant strap
5 Jib section

▶ Remove the first connecting links of the first jib pendant straps **2** after the Midfall assembly position.

▶ Fasten the removed connecting links in the storage position on the Midfall.

▶ Install the midfall connecting links **3** and pin to the jib pendant straps **2 + 4**.

▶ Pull the electric cable from the jib base section to the jib head section and plug it in.

▶ Unwind the electric cable from the wire bracket on the Midfall.

▶ Pull the electric cable from the Midfall to the jib head section and plug it in.

LWN/LR.x/V03.01//Auslieferung/2015-06-03/en

copyright by
LIEBHERR

Installing the mid-point suspension

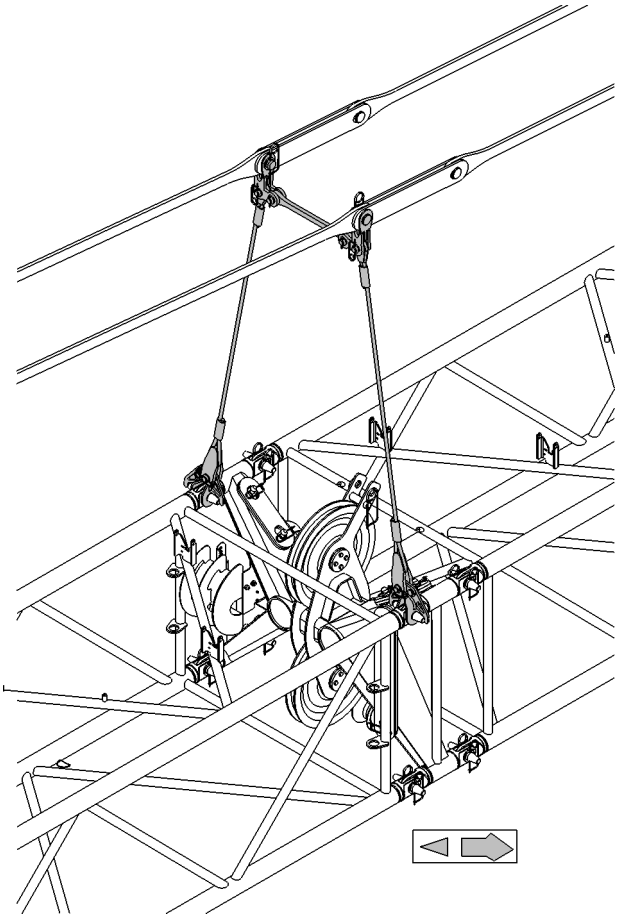

Fig. 5618: Installing the mid-point suspension (illustration of principle)

The mid-point suspension on the midfall is identical with the mid-point suspension on the luffing jib.

▶ Install mid-point suspension on the midfall using the same procedure as with mid-point suspension on luffing jib (For more information see: 7.22.17 Installing mid-point suspension, page 1627) .

LWN/LR.x/V03.01//Auslieferung/2015-06-03/en

copyright by
LIEBHERR

Dismantling rope protection pipes

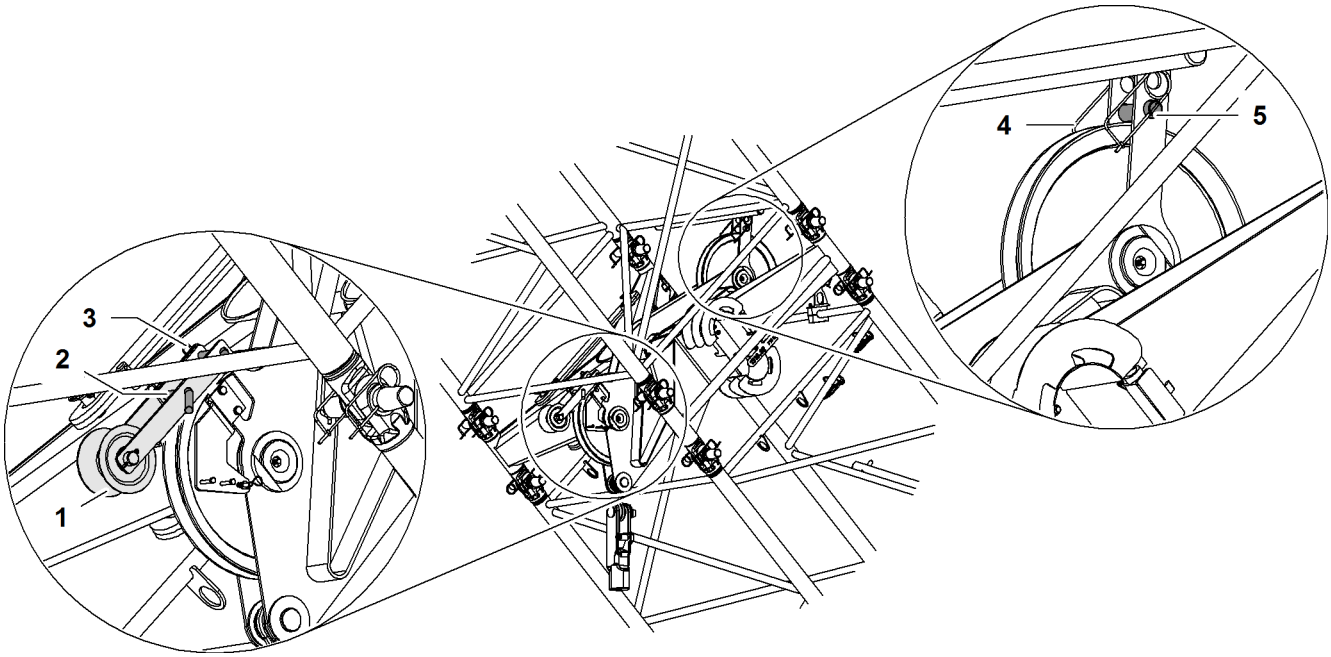

Fig. 5619: Rope pulley and rope protection pipe on midfall

1	Rope pulley	**3**	Safety pin (2x)	**5**	Rope protection pipe
2	Pin (2x)	**4**	Safety pin (2x)		

- ▶ Remove all safety pins **3 + 4**.
- ▶ Remove rope protection pipe **5**.
- ▶ Remove both pins **2**.
- ▶ Remove rope pulley **1**.
- ▶ Reeve rope over top and bottom pulley.
  - ▷ Rope reeved at midfall.
- ▶ Insert both pins **2** at the rope pulley **1**.
- ▶ Install rope protection pipe **5**.
- ▶ Install all safety pins **3 + 4**.
  - ▷ Midfall is reeved and rope protection pipes installed.

Installing the rope fixing point

DANGER
Incorrect number of reevings!
Structural breakdown, toppling of machine.

- ▶ Choose the correct number of reevings as per the load chart.

DANGER
Incorrect installation of pins for pocket lock!
Load breakaway.

- ▶ Install pins for pocket lock as instructed.

LWN/LR.x/V03.01//Auslieferung/2015-06-03/en

copyright by
LIEBHERR

The collar of the pin for the pocket lock is decisive for the installation direction of the rope fixing point.

WARNING
Inadmissible installation of swivels!
Severe injuries, damage to machine.

▶ Install rope with no twists.

▶ Install rope without swivels.

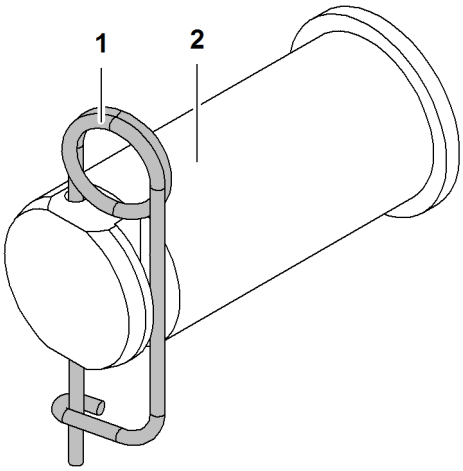

Fig. 5620: Securing the pins

1 Locking spring **2** Pin

DANGER
Pins **2** not completely secured!
Load breakaway.

▶ Ensure that locking spring **1** completely secures the pin **2**.

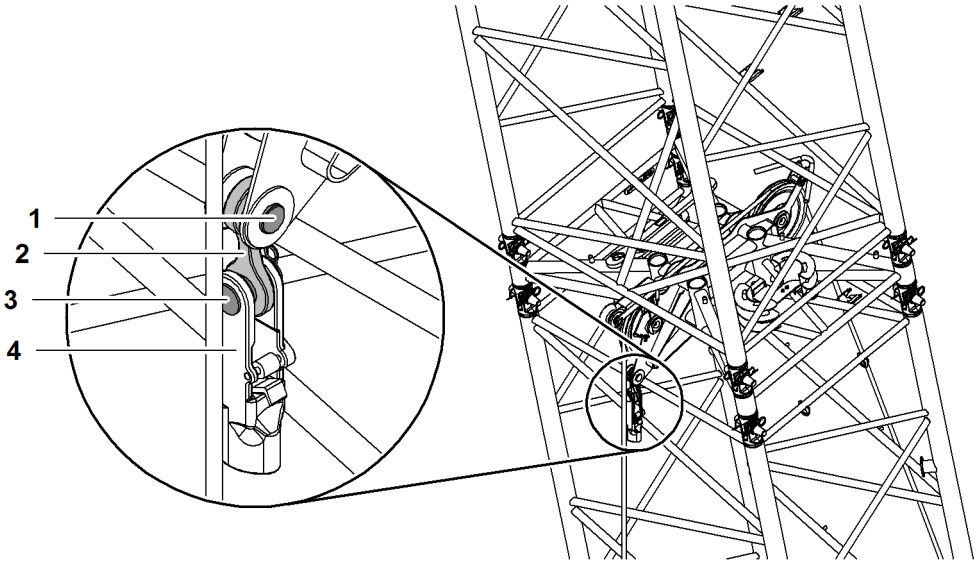

LWN/LR.x/V03.01//Auslieferung/2015-06-03/en

Fig. 5621: Rope fixing point on midfall

1 Pin for rope fixing point
2 Cross strap
3 Pins for pocket lock
4 Pocket lock

copyright by LIEBHERR

- ▶ Pin cross strap **2** with midfall.
- ▶ Secure pin **1** with locking spring.

The collar of the pin **3** for the pocket lock **4** must point towards the jib head.

- ▶ Pin pocket lock **4** with cross strap **2**.
- ▶ Secure pin **3** with locking spring.

LWN/LR.x/V03.01//Auslieferung/2015-06-03/en

copyright by
LIEBHERR

7.26 Adjusting the track

Wide track is mandatory for crane operation and assembly and disassembly.

Medium and narrow track is solely intended for traveling with a lateral tilt of max. 1 % with no load on the hooks or pulley block.

DANGER
Inadmissible setup!
Toppling of machine.

▶ Make sure that the upgraded track width matches the track width selected on the monitor side *Setup - Basic machine*.

DANGER
Rotating the uppercarriage with medium or narrow track not permitted!
Machine toppling over.

▶ Ensure that the uppercarriage is parallel to the crawler side frames.

WARNING
Incorrect track width adjustment process is followed!
Bodily injuries.

▶ Ensure that exclusively authorized persons carry out the track width adjustment process.

Ensure that the following conditions are fulfilled:
- ❑ The subsoil is level and sufficiently supportive.
- ❑ The uppercarriage is parallel to the crawler side frames.
- ❑ The machine operator remains in the cab throughout the entire jack-up process.
- ❑ Authorized persons are available for the track width adjustment process.

7.26.1 Converting from wide track to medium or narrow track

Move machine's center of gravity to the center of the rotation axis

NOTICE
Twisting of the crawler side frames!
Damage to machine.

▶ Adjust the boom so that the machine's center of gravity lies in the middle of the rotation axis.

▶ Check the ground pressure display.

LWN/LR.x/V03.01//Auslieferung/2015-06-03/en

copyright by
LIEBHERR

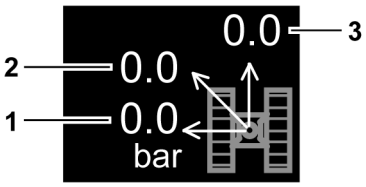

Fig. 5622: Screen section Ground pressure

1	Maximum ground pressure to the side	**3**	Maximum ground pressure forward
2	Maximum ground pressure across one edge		

Machine's center of gravity is located at the center of the of the rotation axis when all three values of the ground pressure indicator are identical.

▶ Move the machine's center of gravity to the middle of the rotation axis: luff the boom.

Extending and pinning the track width adjusting cylinder

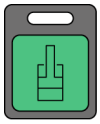

▶ Press the *Cylinder adjustment functions* button on control panel *X23*.

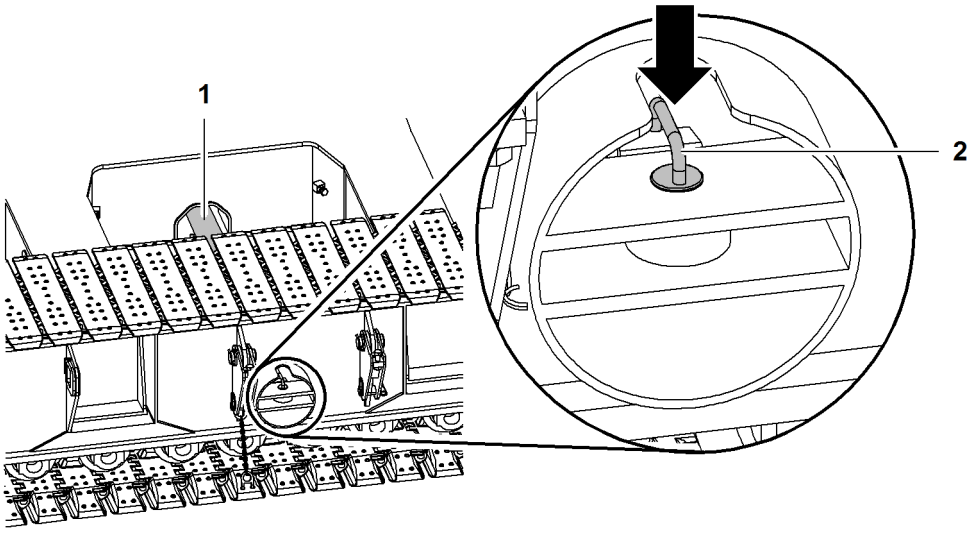

Fig. 5624: Extending and pinning the track width adjusting cylinder

1	Track width adjusting cylinder	**2**	Pin

▶ Plug in the cable remote control on the undercarriage.

▶ Extend track width adjusting cylinder **1** with cable remote control.

▶ Pin track width adjusting cylinder **1** to crawler side frame with pins **2**.

▶ Repeat procedure with second track width adjusting cylinder **1**.

LWN/LR.x/V03.01//Auslieferung/2015-06-03/en

copyright by
LIEBHERR

Loosening strut mountings

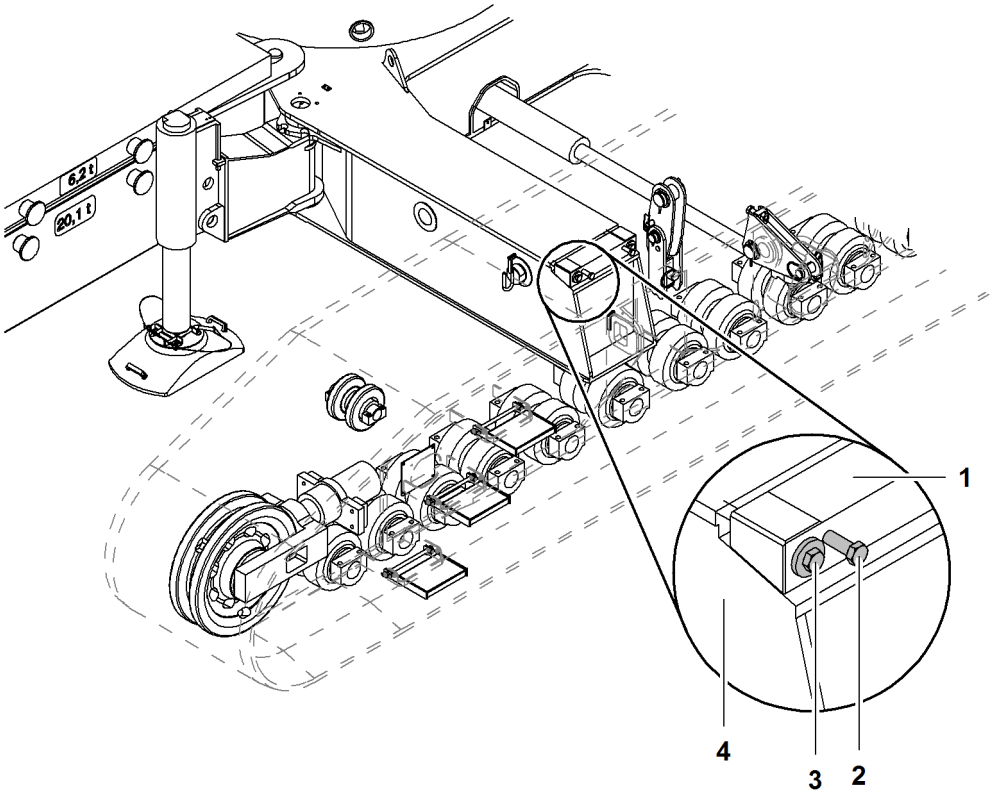

Fig. 5625: Loosening strut mountings

1	Wedge	**3**	Locking screw (2x)
2	Screw (2x)	**4**	Strut

The two outer locking screws **3** must be turned almost completely out of the struts **4** so that the wedge **1** is located as close as possible to the end of the strut.

- ▶ Loosen screws **2** of the strut mounting.
- ▶ Loosen locking screws **3** of strut mounting and twist out almost all the way.
- ▶ Turn in screws **2** of strut mounting.
  - ▷ The wedge **1** loosens.
- ▶ Clean strut **4** and evenly grease the sliding surfaces.
- ▶ Repeat procedure on all strut mountings.

LWN/LR.x/V03.01//Auslieferung/2015-06-03/en

copyright by
LIEBHERR

Preparing the crawler side frame

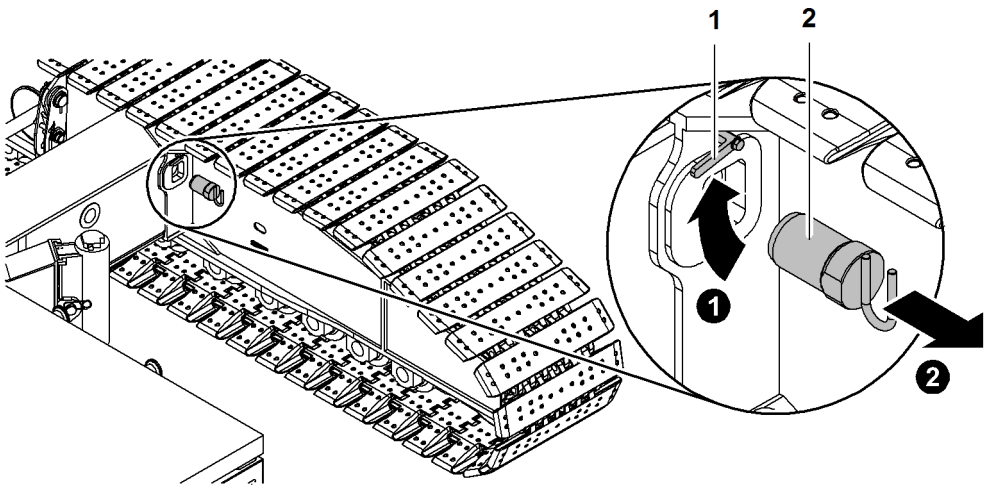

Fig. 5626: Preparing the crawler side frame

1 Safety lever **2** Pin

▶ Undo the safety lever **1** screw.

▶ Fold up the safety lever **1**.

▶ Remove the pin **2**.

▶ Repeat procedure on all crawler side frame pin connection points.

LWN/LR.x/V03.01//Auslieferung/2015-06-03/en

copyright by
LIEBHERR

Supporting the machine

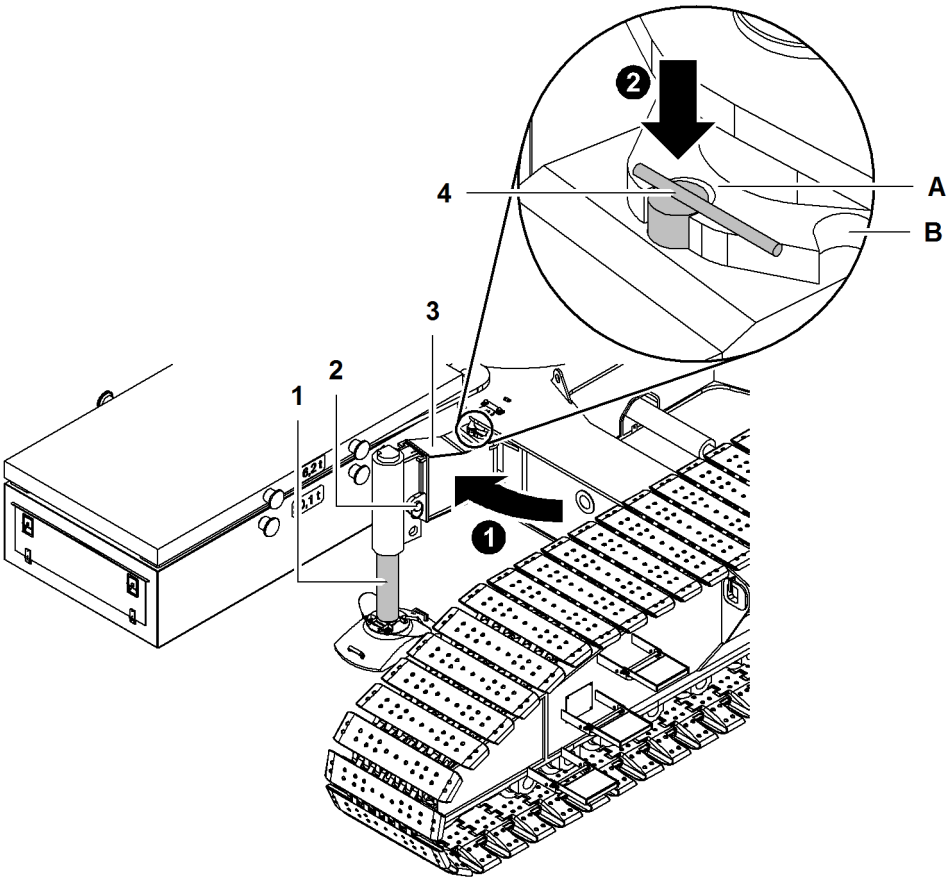

Fig. 5627: Supporting the machine

1	Jack	**4**	Pin
2	Top pin connection point	**A**	Pin connection point of support position for narrow track
3	Slewing bracket	**B**	Pin connection point of support position for wide track

▶ Remove pin **4** on pin connection point **B** of wide track support position.

▶ Swing slewing bracket **3** into narrow track support position.

DANGER
Slewing brackets **3** not pinned!
Toppling of machine.

▶ Pin slewing brackets **3** in narrow track support position.

▶ Insert pin **4** at pin connection point **A** of narrow track support position.

▶ Pin jacks **1** at top pin connection point **2** (For more information see: Adjusting the support height of jacks, page 1169) .

▶ Repeat procedure with all jacks **1**.

LWN/LR.x/V03.01//Auslieferung/2015-06-03/en

copyright by
LIEBHERR

DANGER
Incorrect jack-up process!
Machine toppling over.

- ▶ Ensure that all four jacks are always in contact with the ground.
- ▶ Extend the front and rear hydraulic jacks alternately.
- ▶ Keep an eye on the spirit level.

If guide rollers lift out of the crawler chains:
- ▶ Stop the jack-up process.

The jacks **1** are operated with the toggle switches of the cable remote control (For more information see: 3.24.2 Cable remote control on undercarriage*, page 784) .

Note

Liebherr recommends:
- ▶ always extend two jacks **1** at the same time.

- ▶ Move the corresponding toggle switches on cable remote control forward.
  - ▷ Jacks **1** extend.
  - ▷ Machine lifts.

Retracting the track width adjusting cylinders and pinning the crawler side frames

Set track width adjusting cylinder to medium track

CAUTION
Do not access adjusting range of crawler side frames!
Crushing of body parts.

- ▶ Leave danger zone.

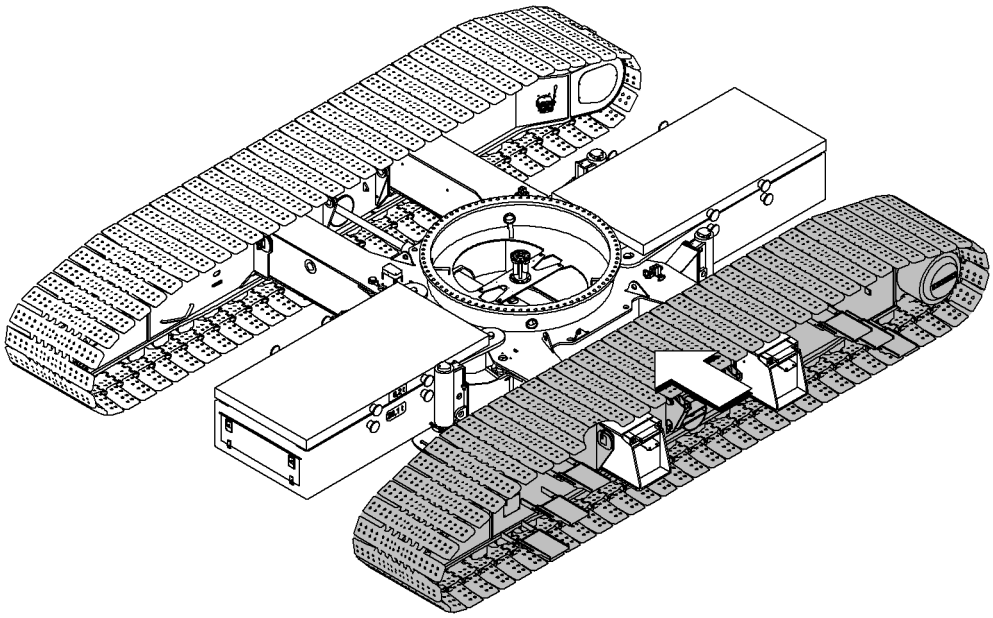

Fig. 5628: Set track width adjusting cylinder to medium track

LWN/LR.x/V03.01//Auslieferung/2015-06-03/en

copyright by
LIEBHERR

- ▶ Retract first track width adjusting cylinder with cable remote control.
- ▶ Retract second track width adjusting cylinder with cable remote control.

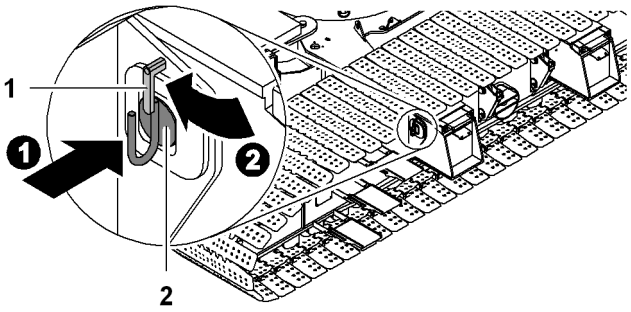

Fig. 5629: Bolting crawler side frame in medium track

1 Safety lever **2** Pin

- ▶ Insert pin **2**.
- ▶ Pull down the safety lever **1**.
- ▶ Tighten the safety lever **1** screw.
- ▶ Repeat procedure on all crawler side frame pin connection points.

Set track width adjusting cylinder to narrow track

CAUTION
Do not access adjusting range of crawler side frames!
Crushing of body parts.

- ▶ Leave the danger area.

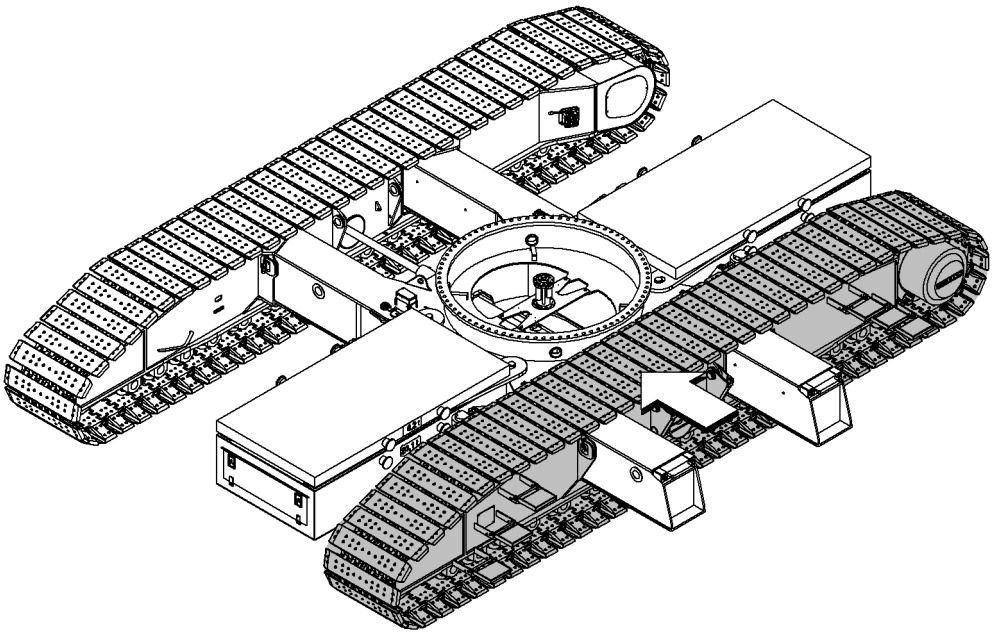

Fig. 5630: Set track width adjusting cylinder to narrow track

- ▶ Retract first track width adjusting cylinder with cable remote control.
- ▶ Retract second track width adjusting cylinder with cable remote control.

LWN/LR.x/V03.01//Auslieferung/2015-06-03/en

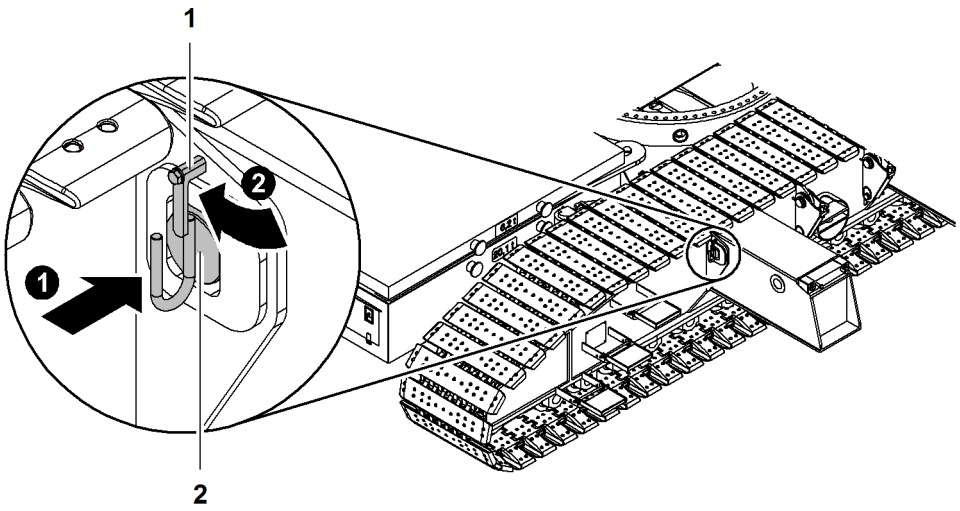

Fig. 5631: Pinning the crawler side frame in narrow track

1 Safety lever **2** Pin

▶ Insert pin **2**.

▶ Pull down the safety lever **1**.

▶ Tighten the safety lever **1** screw.

▶ Repeat procedure on all crawler side frame pin connection points.

Retracting jacks and track width adjusting cylinders

The jacks are operated with the toggle switches of the cable remote control (For more information see: 3.24.2 Cable remote control on undercarriage*, page 784) .

Note

Liebherr recommends:
▶ always retract two jacks at the same time.

▶ Move the corresponding toggle switches on cable remote control backward.
  ▷ Jacks retract.
  ▷ Machine lowers.

▶ Remove pins on track width adjusting cylinder.

▶ Retract track width adjusting cylinder with cable remote control.

▶ Unplug cable remote control on undercarriage and stow away.

LWN/LR.x/V03.01//Auslieferung/2015-06-03/en

copyright by
LIEBHERR

Mounting uppercarriage ladder for narrow track

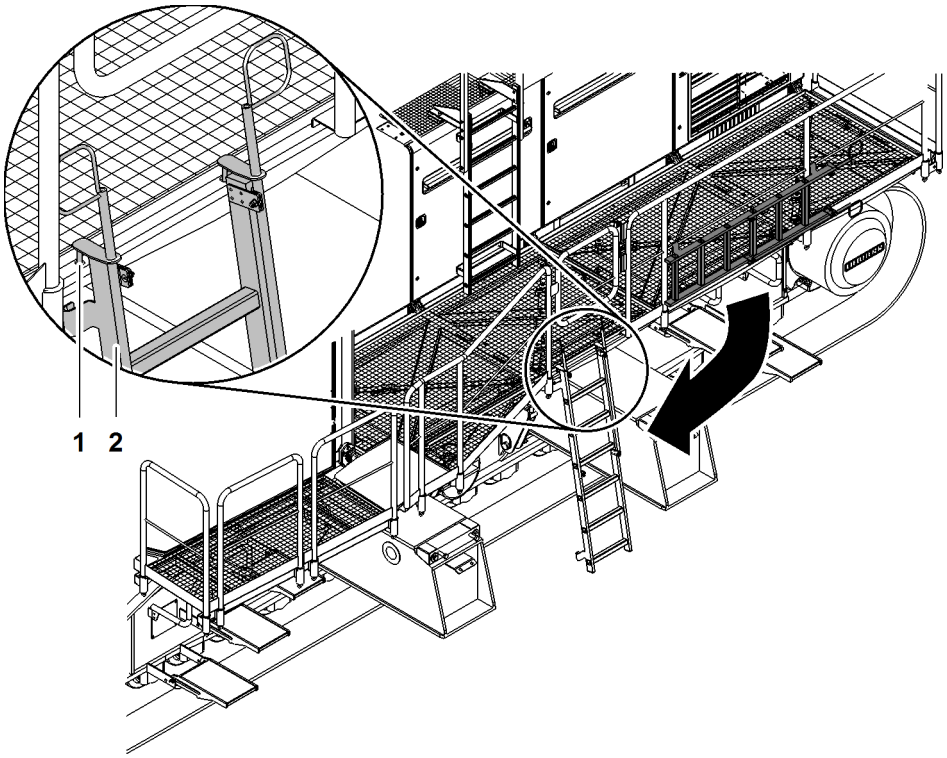

Fig. 5632: Mounting uppercarriage ladder for narrow track

1 Suspension equipment (2x) **2** Uppercarriage ladder

▶ Take uppercarriage ladder **2** out of bracket on railing.

▶ Place suspension device **1** below access in the intended openings.

7.26.2 Converting from medium or narrow track to wide track

Conversion from medium or narrow track to wide track is carried out using the same assembly procedure as the conversion from wide track to medium or narrow track (For more information see: 7.26.1 Converting from wide track to medium or narrow track, page 1700) .

LWN/LR.x/V03.01//Auslieferung/2015-06-03/en

copyright by
LIEBHERR

7.27 Hydraulic cab elevation*

7.27.1 Erecting and bolting the mast

WARNING
Improper erection of the mast!
Serious injury.

- ▶ Make sure that no-one is standing in the danger area.
- ▶ Leave the danger area.
- ▶ Make sure that there are no tools and no loose objects on the mast.

Ensure that the following conditions are fulfilled:
- ❑ Diesel engine is switched on.
- ❑ Cylinder adjustment functions on.
- ❑ Cab is in transport position.

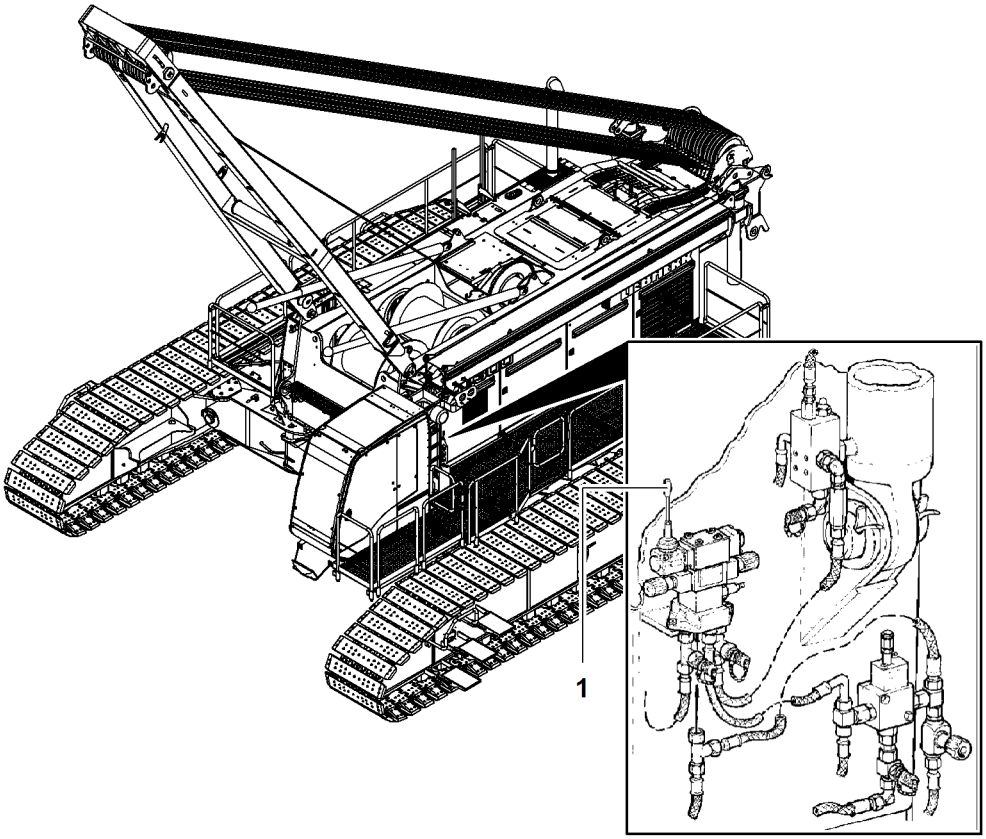

Fig. 5633: Erecting the mast

1 Adjustment lever

▶ Actuate adjustment lever **1**.
▷ Mast erects itself:

LWN/LR.x/V03.01//Auslieferung/2015-06-03/en

copyright by
LIEBHERR

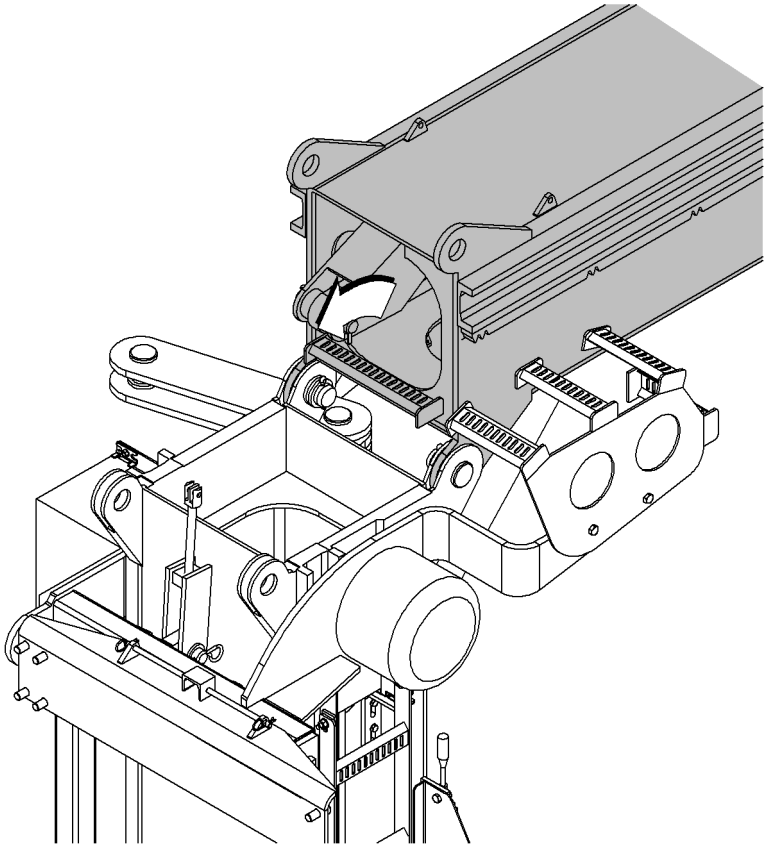

Fig. 5634: Mast erects itself

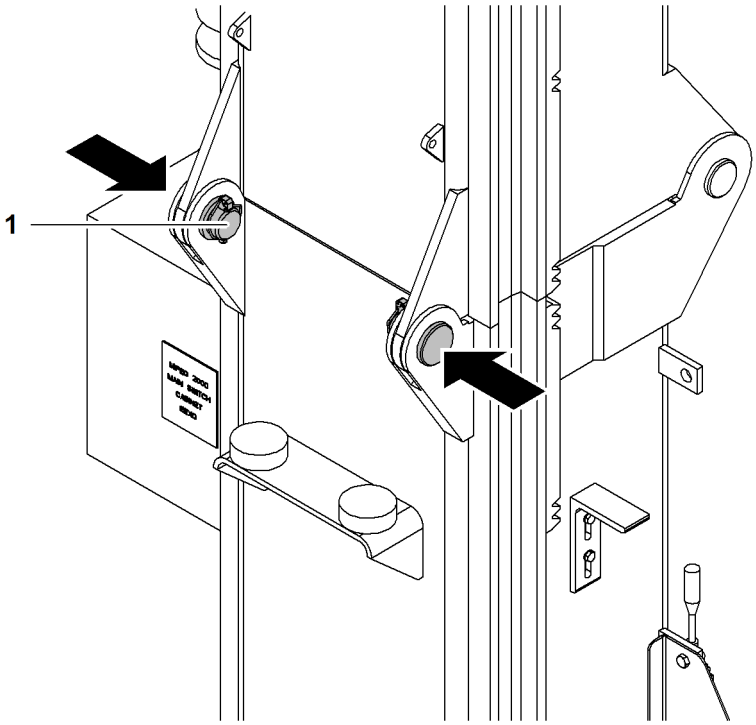

Fig. 5635: Pinning the mast

1 Pin (2x)

▶ Bolt the mast.

▶ Secure pin **1** with washers and linchpin.

LWN/LR.x/V03.01//Auslieferung/2015-06-03/en

7.27.2 Setting the cab in the working position and bolting in place

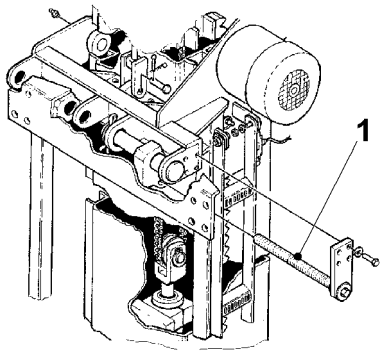

Fig. 5636: Setting the cab into the working position

1 Threaded bar

The threaded bar **1** functions as a spindle and moves the cabin in or out.

▶ Use the threaded bar **1** to move the cabin out as far as it will go.

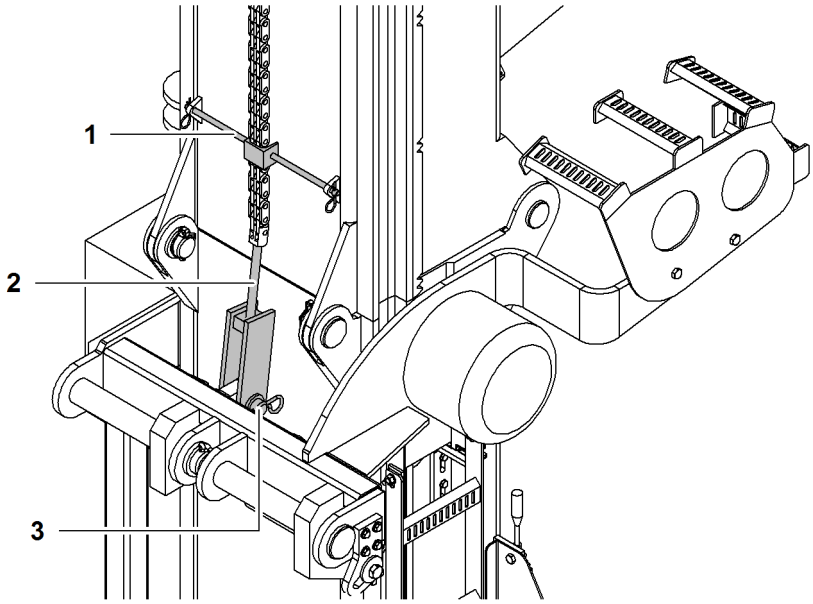

Fig. 5637: Pinning the chain

1 Chain guide
2 Chain
3 Pin

▶ Remove chain guide **1** and place in temporary storage.

▶ Pin chain **2** to cabin frame.

▶ Secure pin **3** with split pin.

LWN/LR.x/V03.01//Auslieferung/2015-06-03/en

copyright by
LIEBHERR

7.27.3 Dismantling

WARNING
Improper disassembling!
Serious injury.

- ▶ Make sure that no-one is standing in the danger area.
- ▶ Leave the danger area.
- ▶ Do not remain on the uppercarriage while the mast is lowered.

NOTICE
Improper disassembling!
Damage to machine.

- ▶ Unbolt the chain from the cab.
- ▶ Attach the chain guide.
- ▶ Do not trap the hose kit.
- ▶ Dismantle the railings on the uppercarriage.
- ▶ Dismount ladder on uppercarriage.

Summary of the of disassembly steps

- ▶ Lower the cab completely.
- ▶ Unbolt the chain from the frame of the cab.
- ▶ Use a chain guide to secure the chain to the mast.
- ▶ Placing the cabin in transport position: Push all the way in with threaded bar.
- ▶ Unbolt both pins of the mast fixing.
- ▶ Lay down the mast using the control lever on the mast.

LWN/LR.x/V03.01//Auslieferung/2015-06-03/en

copyright by
LIEBHERR

7.28 Vandalism protection*

7.28.1 Installing the vandalism protection

Ensure that the following conditions are fulfilled:
❑ Cabin is prepared for installation of the vandalism protection.

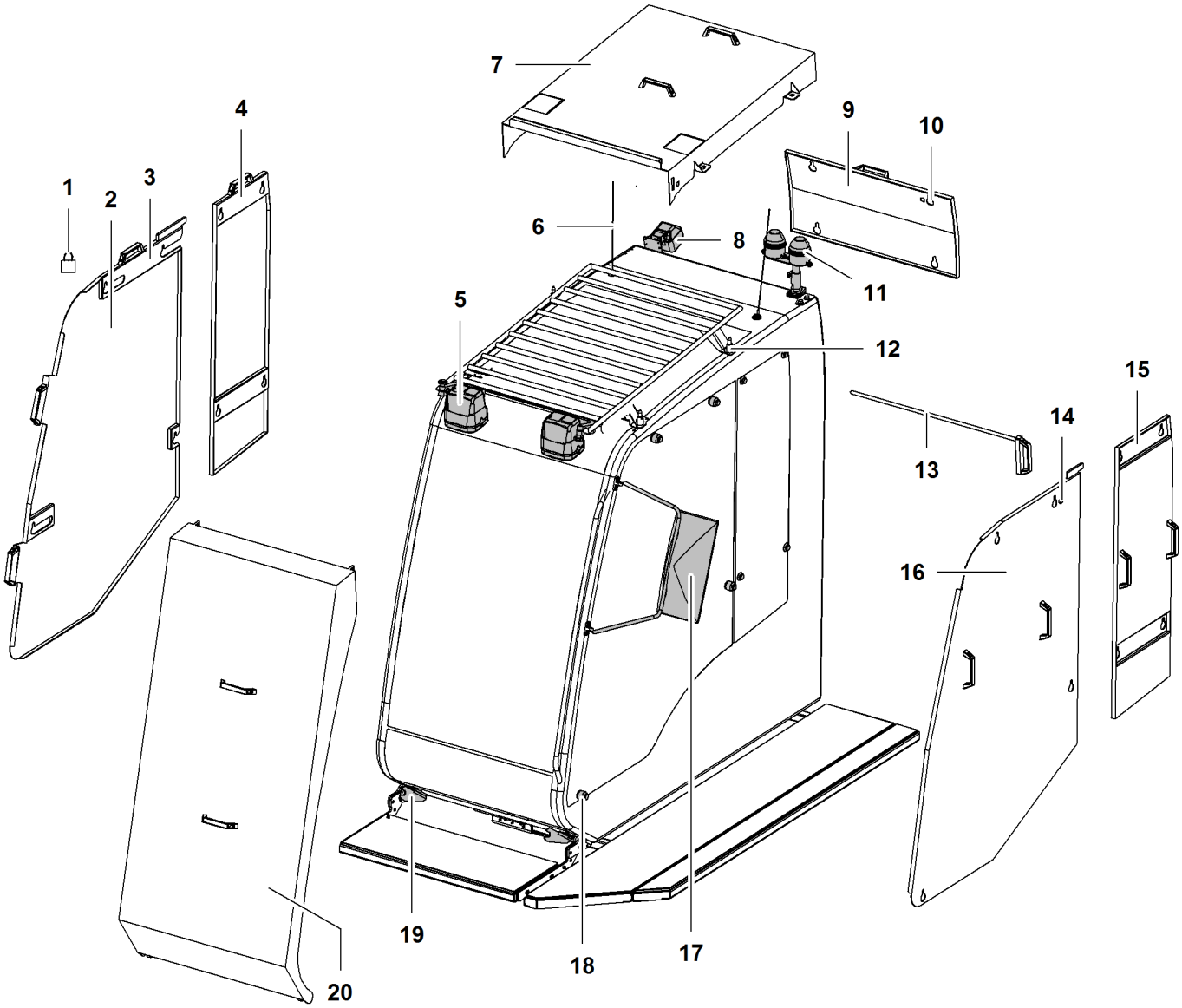

Fig. 5638: Installing the vandalism protection

1	Padlock	**8**	Rear floodlight	**15**	Left rear cover
2	Right front cover	**9**	Rear cover	**16**	Left front cover
3	Lock	**10**	Lock	**17**	Side mirror
4	Right rear cover	**11**	Flashing light/load moment limiter lamp	**18**	Suspension equipment (8x)
5	Front floodlight (2x)	**12**	Bracket (4x) for top cover	**19**	Bracket (2x) for front cover
6	Antenna (2x)	**13**	Barrier rod	**20**	Front cover
7	Top cover	**14**	Lock		

▶ Fold antennas **6** down.

LWN/LR.x/V03.01//Auslieferung/2015-06-03/en

copyright by
LIEBHERR

- ▶ Fold flashing light/load moment limiter lamp **11** down.
- ▶ Deinstall side mirror **17**.
- ▶ Fold down front floodlight **5** and rear floodlight **8**.
- ▶ Insert top cover **7** at the brackets **12** of the cabin roof protection guard.
- ▶ Suspend rear cover **9** in the suspension equipment **18**.
- ▶ Close lock **10**.
  - ▷ Rear cover **9** is installed and secured.
- ▶ Suspend right rear cover **4** in the suspension equipment **18**.
- ▶ Suspend right front cover **2** in the suspension equipment **18**.
- ▶ Close lock **3**.
  - ▷ Right covers **2 + 4** are installed and secured.
- ▶ Suspend left rear cover **15** in the suspension equipment **18**.
- ▶ Suspend left front cover **16** in the suspension equipment **18**.
- ▶ Close lock **14**.
  - ▷ Left covers **15 + 16** are installed and secured.
- ▶ Insert front cover **20** at the brackets **19**.
- ▶ Fold front cover **20** back.
- ▶ Insert barrier rod **13** at the front cover **20** and top cover **7**.
- ▶ Secure barrier rod **13** with padlock **1**.
  - ▷ Vandalism protection is installed.

LWN/LR.x/V03.01//Auslieferung/2015-06-03/en

copyright by
LIEBHERR

7.29 Jib luffing winch*

With boom configurations with fixed jibs, a jib luffing winch is required. If no jib luffing winch is installed on the main boom base section, the following steps must be performed.

Ensure that the following conditions are satisfied:
- ❑ Auxiliary crane with a working load of 1.5 t (3,307 lb) is available.
- ❑ Approved lifting equipment is available.
- ❑ Any accessories required are available.

7.29.1 Fixing rope end

To prevent the rope reeving of the jib luffing winch from coming loose, the rope end must be fixated prior to installation.

▶ Attach auxiliary rope to the rope end of the jib luffing winch rope.

▶ Wrap auxiliary rope around jib luffing winch.

▶ Secure auxiliary rope.

7.29.2 Lashing the jib luffing winch

WARNING
Improper lashing of the jib luffing winch!
Unforeseeable load rotation.

▶ Use approved rigging exclusively.

▶ Use prescribed lifting points.

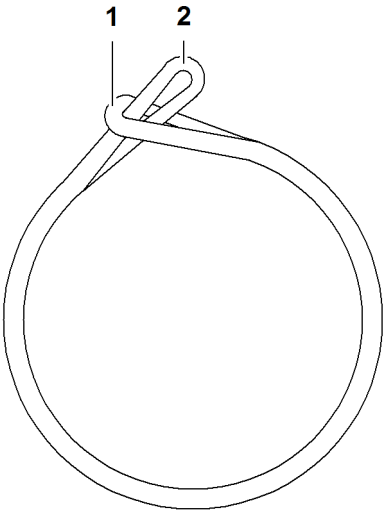

Fig. 5639: Loop

1 Loop that pulls in **2** Loop lashed to auxiliary crane

▶ Form two loops from lifting equipment.

▶ Place loops left and right around rope drum of the jib luffing winch.

▶ Lash loop **2** onto auxiliary crane.

LWN/LR.x/V03.01//Auslieferung/2015-06-03/en

copyright by LIEBHERR

- ▶ Slightly tighten loop by lifting.
- ▶ By turning the loops of the jib luffing winch, align it in such a way that the jib luffing winch can be installed in the main boom base section.
  ▷ Jib luffing winch is lashed.
- ▶ Secure hydraulic lines of the jib luffing winch with cable ties against sliding.
- ▶ Secure electric cable of the jib luffing winch with cable ties against sliding.
- ▶ If required, de-install pins of the jib luffing winch.
- ▶ Grease bolts.
- ▶ Provide securing material.
  ▷ Jib luffing winch ready for installation.

7.29.3 Installation of jib luffing winch

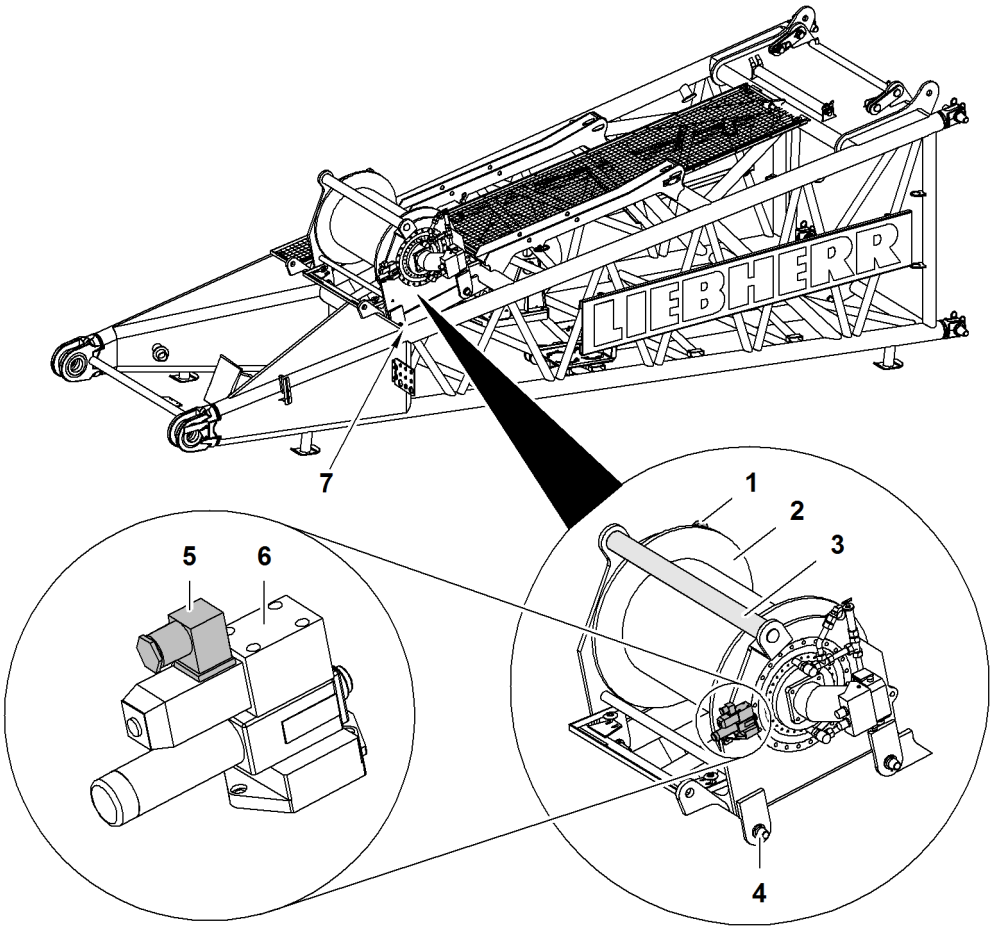

Fig. 5640: Overview installation of jib luffing winch

1	Attachment point for rope pressure roller (2x)	**5**	Electrical plug *+4E-Y06* for brake valve
2	Luffing jib luffing winch	**6**	Brake valve
3	Rope protection roller	**7**	Position electrical plug
4	Pin (4x)		

- ▶ Lift jib luffing winch **2** with auxiliary crane into main boom base section.
- ▶ Bolt jib luffing winch **2** with main boom base section.
- ▶ Secure all pins **4** with cotter and washer.
  ▷ Jib luffing winch installed in main boom base section.

LWN/LR.x/V03.01//Auslieferung/2015-06-03/en

7.29.4 Connect hydraulic lines

Ensure that the following conditions are satisfied:
- ❑ Hydraulic connections are clean.
- ❑ All protective covers of the hydraulic connections are in place.
- ❑ Diesel engine is turned off.

NOTICE
Dirty hydraulic connections!
Damage to the hydraulic system.

▶ Clean hydraulic connections prior to connection.

▶ Connect all plug-type connections.

▶ Check whether plug-tape connections are completely latched.

▶ Plug protective covers into each other.

NOTICE
Improper tightening of the screw connections!
Damage to thread.

▶ Only tighten screw connections by hand.

Note
Liebherr recommends:

▶ Undo screw couplings with damaged threads with filter strap wrench.

▶ Connect all screw connections.

▶ Screw protective covers into each other.

LWN/LR.x/V03.01//Auslieferung/2015-06-03/en

copyright by
LIEBHERR

7.29.5 Connect the electric cables

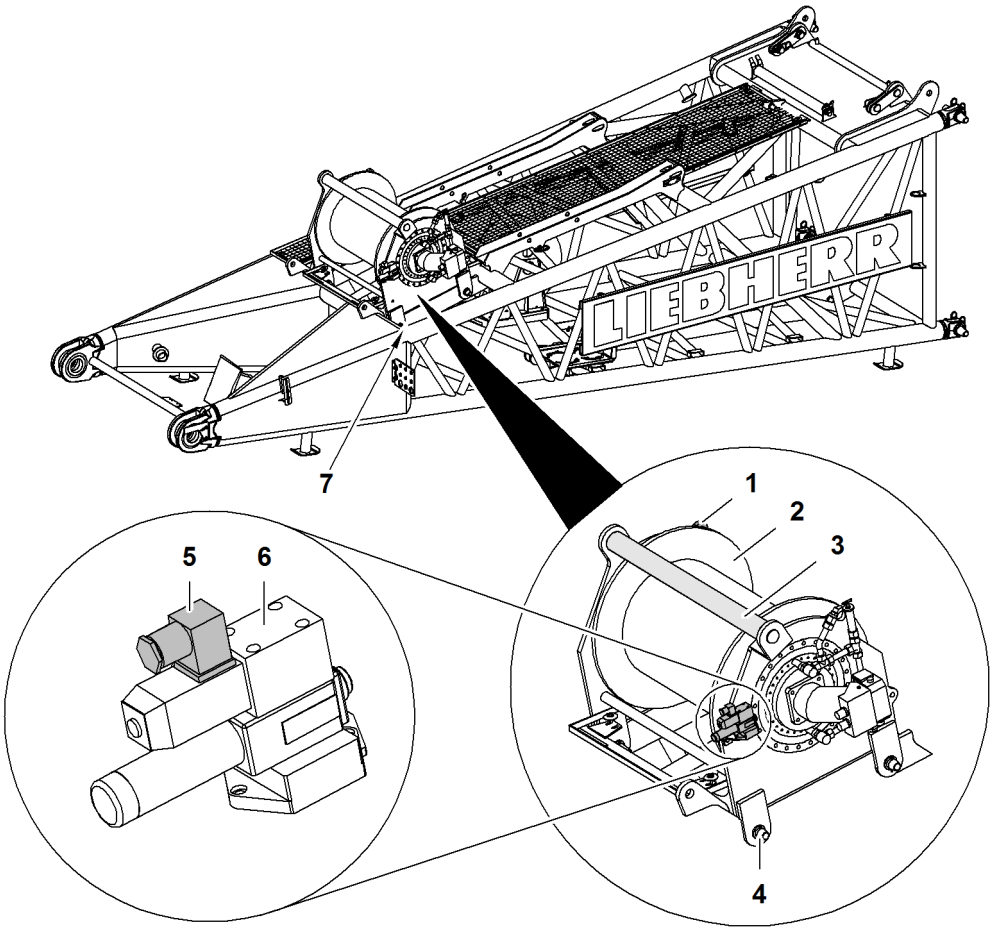

Fig. 5641: Overview installation of jib luffing winch

1	Fastening point for wire rope pressure roller (2x)	**5**	Electrical plug *+4E-Y06* for brake valve
2	Luffing jib luffing winch	**6**	Brake valve
3	Rope protection roller	**7**	Position electrical plug
4	Pin (4x)		

The brake valve of the jib luffing winch must be supplied with power. Upon delivery of the machine without jib luffing winch, the electrical plug *+4E-Y06* **5** is located in the position electrical plug **6**.

▶ Plug electrical plug *+4E-Y06* **5** on brake valve **6**.

▶ Tighten screw connection.

▶ Attach electric line with cable tie outside of danger zone.
▷ Jib luffing winch ready for operation.

LWN/LR.x/V03.01//Auslieferung/2015-06-03/en

copyright by LIEBHERR

7.30 Time-saving reconfiguring of the main boom

An auxiliary crane can be used to shorten or extend the main boom without having to dismantle it.

Ensure that the following conditions are fulfilled:
- ❑ Changing the main boom length is permissible.
- ❑ The applicable load chart for the new main boom length is available.
- ❑ Jib is not attached.
- ❑ Sufficient space is available for re-configuring.
- ❑ An auxiliary crane with sufficient working load is available.
- ❑ Appropriate rigging is available for the hoisting operations to be carried out by the auxiliary crane.
- ❑ Sufficient wooden blocks are available for support.
- ❑ The assembly positions of the rope guide and the mid-point suspensions are known.

7.30.1 Reconfiguring the main boom

WARNING
Laying down the main boom incorrectly!

▶ Follow the instructions for laying down the main boom .

NOTICE
Main boom is skewed!
Damage to the main boom.

▶ Set down the main boom on wooden blocks horizontally.

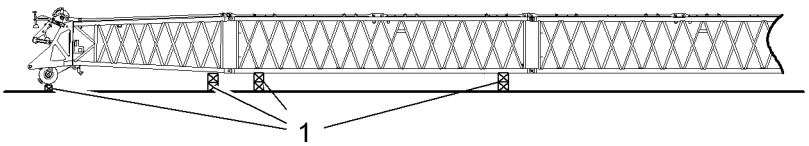

Fig. 5642: Main boom on wooden blocks

1 Wooden blocks

▶ Set down the main boom on wooden blocks **1**.

▶ Lower A-frame 1 forwards until the main boom pendant straps are resting on the main boom.

▶ Separate the main boom pendant straps from A-frame1 equalizer.

▶ Bolt the assembly cylinder to the boom base section.

▶ Disconnect and pull back the electric cable from the terminal box on the boom head section.

LWN/LR.x/V03.01//Auslieferung/2015-06-03/en

copyright by LIEBHERR

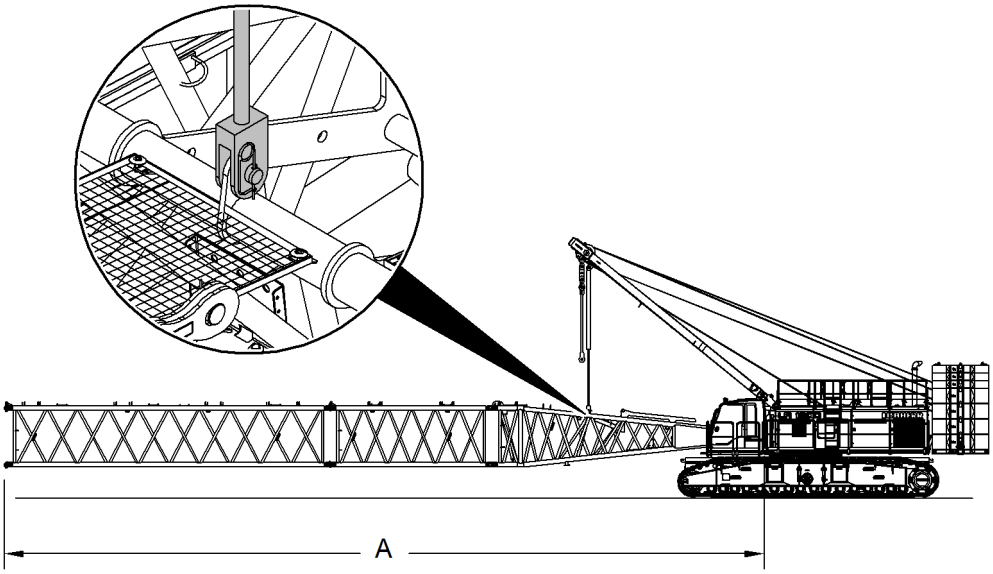

Fig. 5643: Maximum maneuverable main boom length with time-saving reconfiguration

A Maximum maneuverable main boom length

NOTICE
Maximum maneuverable main boom length **A** exceeded!
Risk of damage to the main boom and assembly cylinder.

▶ Maximum manoeuvrable main boom length (boom base section + boom section 6 m (20 ft) + boom section 12 m (40 ft)) must not be exceeded.

▶ Unbolt the main boom and main boom pendant straps at the extension point.

NOTICE
Dynamic movements when manoeuvring!
Damage to the main boom and assembly cylinder.

▶ Manoeuvre carefully with basic machine.

▶ If necessary, maneuver with the basic machine.

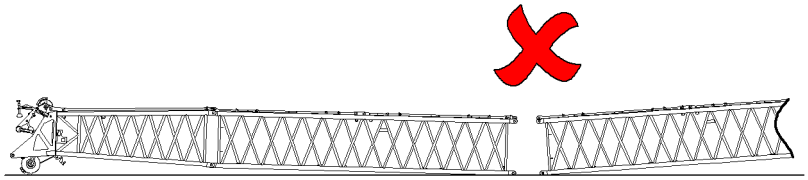

Fig. 5644: Incorrect reconfiguration

LWN/LR.x/V03.01//Auslieferung/2015-06-03/en

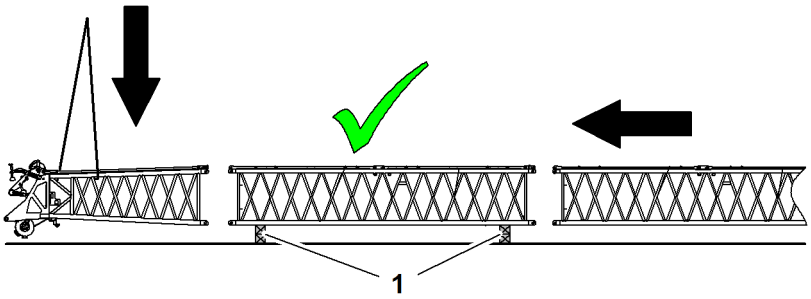

Fig. 5645: Correct reconfiguration

1 Wooden blocks

NOTICE
Boom sections lifted incorrectly!
Damage to boom sections.

▶ Always lift the boom sections one at a time at the lifting points provided.

▶ Fit and remove the boom sections using an auxiliary crane.

▶ Bolt on boom sections and main boom pendant straps.

▶ Approach the main boom carefully with the basic machine.

▶ Bolt on boom sections and main boom pendant straps.

▶ Detach assembly cylinder from main boom base section.

▶ Pin main boom pendant straps to A-frame1 equalizer.

▶ Connect the electric cable to the terminal box on the boom head section and secure using retaining clips.

DANGER
Incorrect installation of mid-point suspensions!
Structural breakdown.

▶ Note changes to the assembly positions and rope lengths of the mid-point suspensions.

▶ Check assembly positions and rope lengths of mid-point suspensions.

NOTICE
Incorrect assembly of the rope guide!
Damage to main boom and rope of winch1/winch2.

▶ Note changes to the assembly position of the rope guide.

▶ Check assembly position of rope guide.

Now proceed as follows:

LWN/LR.x/V03.01//Auslieferung/2015-06-03/en

copyright by
LIEBHERR

7.31 Disassembling the luffing jib + Midfall

DANGER
Incorrect disassembly of the machine!

▶ Erectability chart, critical angles and boom radius limitations must be observed.

The luffing jib + midfall must be disassembled in the reverse order to assembly.

Ensure that the following conditions are fulfilled:
- ❑ There must be sufficient space available to lay down the assembled booms.
- ❑ The signalmen and assistants have received instructions.
- ❑ The necessary tools and approved lifting equipment is available.
- ❑ Wooden blocks are available for placement.

7.31.1 Brief summary

The luffing jib + midfall are disassembled in exactly the same way as the luffing jib (For more information see: 7.32 Deinstalling the luffing jib, page 1723) .

LWN/LR.x/V03.01//Auslieferung/2015-06-03/en

copyright by
LIEBHERR

7.32 Deinstalling the luffing jib

DANGER
Incorrect disassembly of machine!
Toppling of machine, structural breakdown.

▶ Observe erectability chart, critical angles and boom radius limitations.

The luffing jib must be disassembled in the reverse order to assembly.

Ensure that the following conditions are fulfilled:
- ❑ Sufficient space is available to lay down the assembled booms.
- ❑ Signalmen and assistants are instructed.
- ❑ The necessary tools and approved lifting equipment are available.
- ❑ Wooden blocks are available for placement.

7.32.1 Preparing the machine

Note

Liebherr recommends:
▶ Place pulley block or hook on timber.

LWN/LR.x/V03.01//Auslieferung/2015-06-03/en

copyright by
LIEBHERR

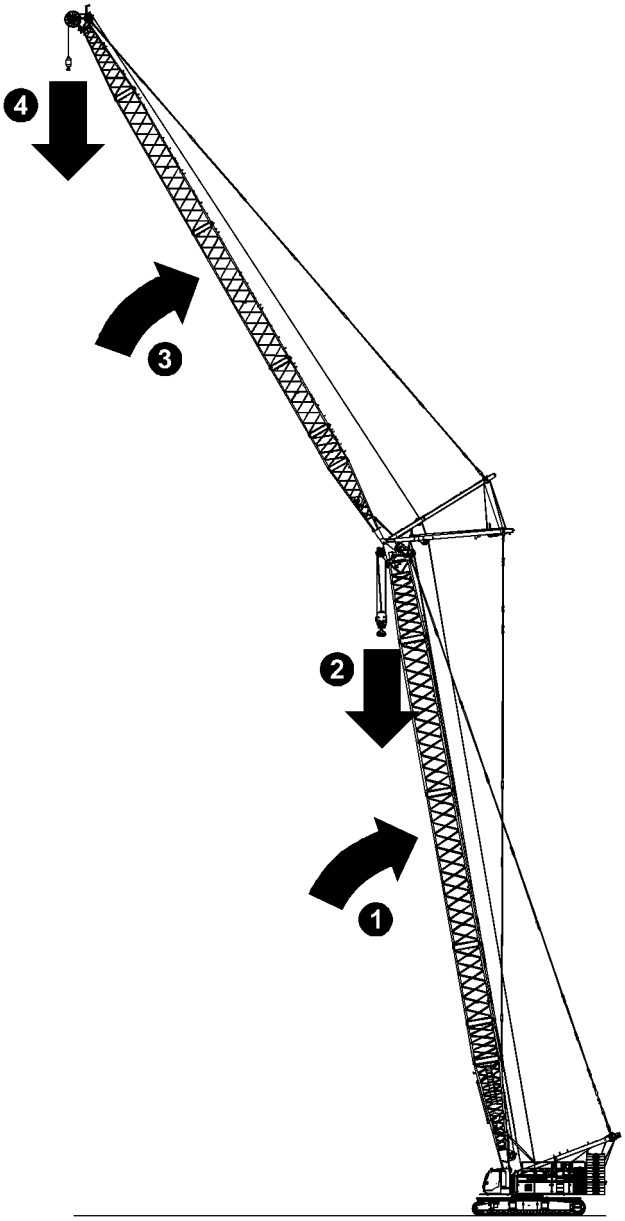

Fig. 5646: Preparing the machine (illustration of principle)

Note
The total center of gravity of the machine is moved beyond the first guide roller! Sudden swinging of the boom/jib during the laying down operation.

Liebherr recommends:
- ▶ For boom configurations with long main booms and short jibs, follow the procedure for “Blocked Crawlers” (For more information see: 4.27 Blocked crawlers*, page 964) .

- ▶ Set main boom to an 85° angle.
- ▶ Lower main boom pulley block or hook to the ground and lay down.
- ▶ Set jib to an angle of 70°.
- ▶ Lower pulley block or jib hook to the ground and lay down.

LWN/LR.x/V03.01//Auslieferung/2015-06-03/en

copyright by
LIEBHERR

7.32.2 Lowering the jib up to load moment limiter stop

DANGER
Erectability chart is not followed!
Toppling of machine.

▶ Only lay down boom if erection is permitted according to the erectability chart.

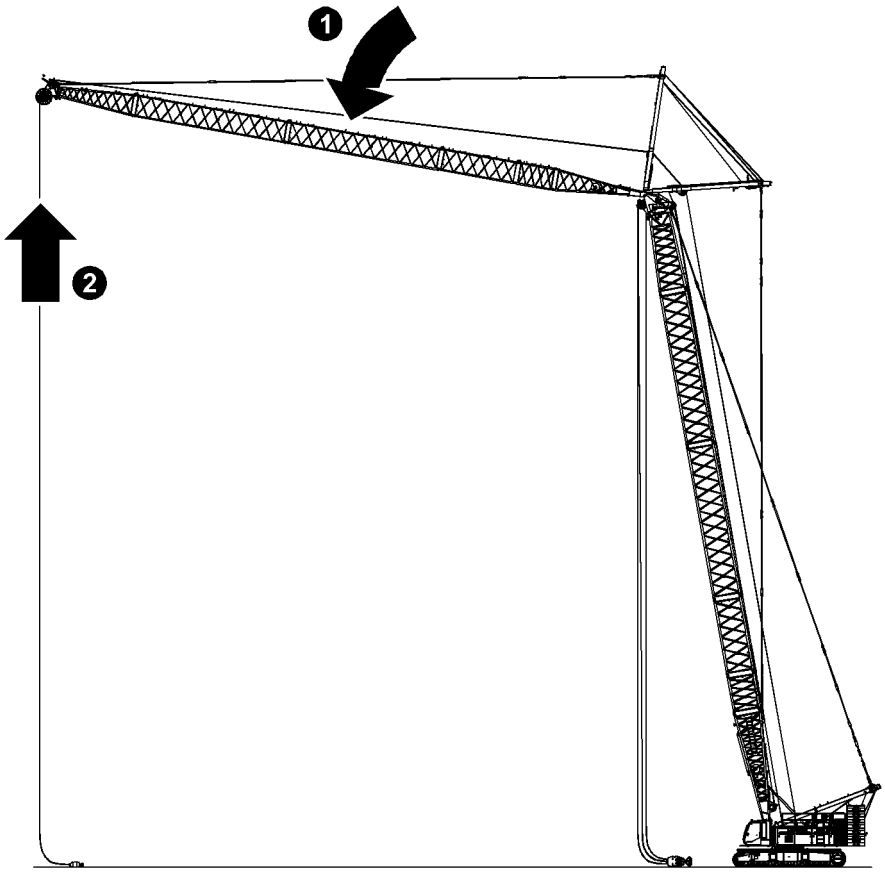

Fig. 5647: Lowering the jib up to the load moment limiter stop (illustration of principle)

▶ Lower jib.

NOTICE
Incorrect laying down procedure!
Damage to equipment.

▶ Do not drag hook or pulley block along the ground.

▶ Prevent slack rope.

▶ Reeve rope of winch1/winch2 on jib if necessary.

If a load moment limiter stop is triggered:
▶ Press the *Load moment limiter assembly/self-lock* button on control panel *X23*.

No load chart exist for machines geometry:
▷ Function “load moment limiter assembly” is active.
▷ The LED in the button *Load moment limiter assembly/self-lock* is lit.

LWN/LR.x/V03.01//Auslieferung/2015-06-03/en

copyright by LIEBHERR

▷ Machine functions are enabled without restriction.
▷ Load moment limiter lamps flash orange.

▶ Press the *Assembly functions* switch on control panel *X12*.

The following buttons have to be pressed additionally with machine types LR 1003, LR 1004, LR 1006:

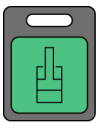

▶ Press the *Cylinder adjustment functions* button on control panel *X23*.

▶ Press the *Extend A-frame1 cylinder* button on control panel *X23*.

7.32.3 Lowering the jib until wheels touch the ground or bottom jib limit switch is triggered

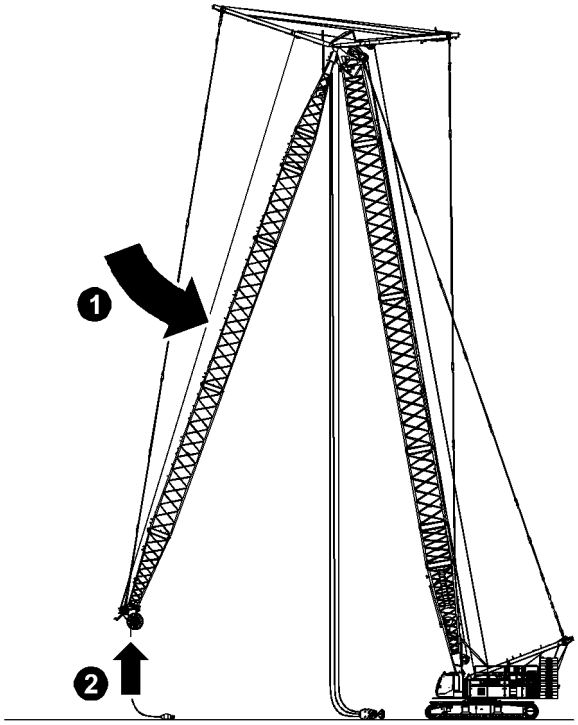

Fig. 5652: Lowering the jib until wheels touch the ground or bottom jib limit switch is triggered (illustration of principle)

If the jib is shorter than the main boom, the lower jib limit switch triggers before the wheels set down on the ground.

If the jib is longer than the main boom, the wheels set down on the ground before the jib limit switch triggers.

▶ Lower jib until wheels touch the ground or bottom jib limit switch is triggered.

If an attached auxiliary jib touches the ground:
▶ Ensure that auxiliary jib pendant straps fold up.

LWN/LR.x/V03.01//Auslieferung/2015-06-03/en

copyright by LIEBHERR

If the lightning rod* on the jib head touches the ground:
▶ Move lightning rod* on the jib head into transport position.

NOTICE
Incorrect laying down procedure!
Damage to equipment.

▶ Do not drag hook or pulley block along the ground.

▶ Prevent slack rope.

▶ Reeve rope of winch1/winch2 on jib if necessary.

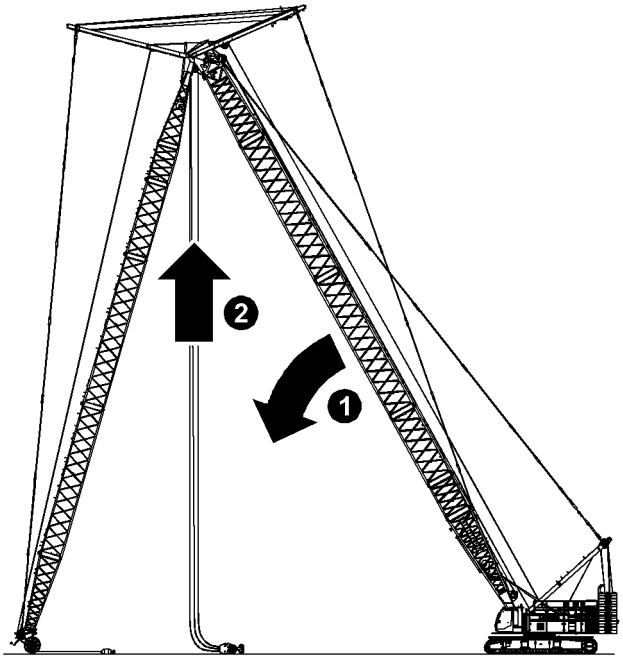

Fig. 5653: Lowering the main boom until the wheels touch the ground (illustration of principle)

NOTICE
Inadmissible jib angle!
Toppling of jib tilting-back supports.
Damage to jib.

▶ Make sure that jib tilting-back supports do not tilt forward.

▶ Lift jib if necessary.

LWN/LR.x/V03.01//Auslieferung/2015-06-03/en

copyright by
LIEBHERR

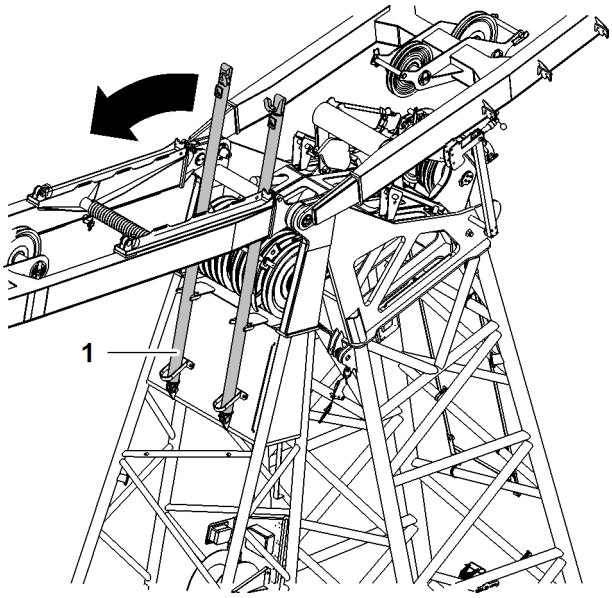

Fig. 5654: Jib tilting-back supports tilt forward

1 Jib tilting-back support (2x)

When the bottom jib limit switch triggers:
▶ Lower main boom and at the same time raise jib until wheels set down on the ground.

If an attached auxiliary jib touches the ground:
▶ Ensure that auxiliary jib pendant straps fold up.

If the lightning rod* on the jib head touches the ground:
▶ Move lightning rod* on the jib head into transport position.

NOTICE
Incorrect laying down procedure!
Damage to equipment.

▶ Do not drag hook or pulley block along the ground.

▶ Prevent slack rope.

▶ Reeve rope of winch1/winch2 on main boom if necessary.

7.32.4 Lowering the main boom and jib all the way to the ground

DANGER
Jib backstay straps and jib pendant straps under tension!
Toppling of machine.

▶ Ensure that Jib backstay straps and jib pendant straps are slightly slack.

DANGER
Mid-point suspension under tension!
Toppling of machine.

▶ Ensure that mid-point suspension ropes are slightly slack.

LWN/LR.x/V03.01//Auslieferung/2015-06-03/en

copyright by LIEBHERR

NOTICE
Obstacles when laying down jib!
Damage to boom components.

▶ Ensure that jib can roll forwards unhindered when it is laid down.

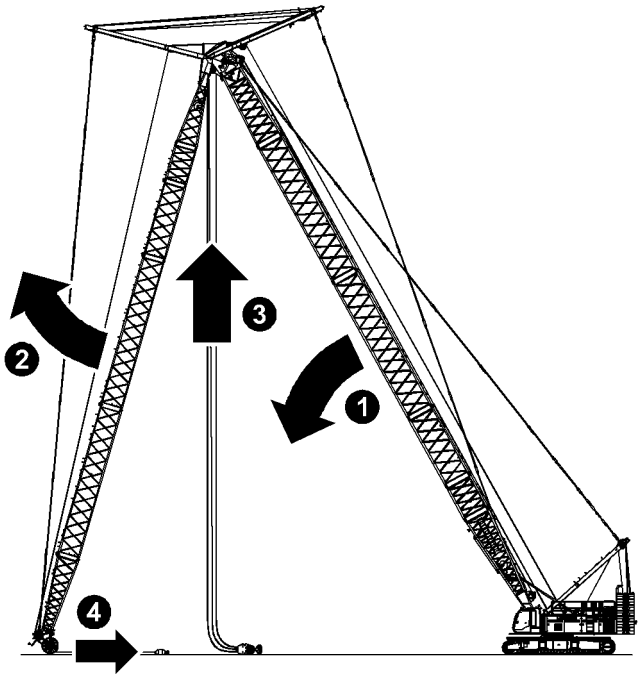

Fig. 5655: Lowering the main boom and jib all the way to the ground (illustration of principle)

NOTICE
Collision between A-frame2 and A-frame3!
Damage to A-frame2 and A-frame3.

▶ Do not completely move A-frame2 and A-frame3 together.

LWN/LR.x/V03.01//Auslieferung/2015-06-03/en

copyright by
LIEBHERR

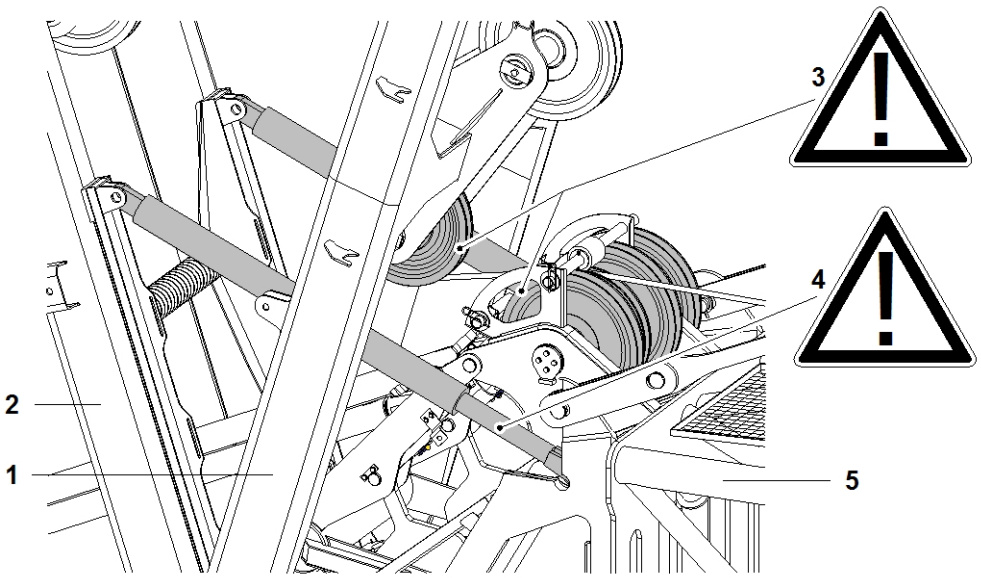

Fig. 5656: Dangers when laying down A-frame2/A-frame3

1	A-frame2	**4**	Minimum dimension x of the visible piston rod of the hydraulic tilting-back support (2x)
2	A-frame3	**5**	Main boom head
3	Collision point of pulleys		

▶ Lower main boom and lift jib at the same time.

NOTICE
Incorrect laying down procedure!
Damage to equipment.

▶ Do not drag hook or pulley block along the ground.

▶ Prevent slack rope.

▶ Reeve rope of winch1/winch2 on main boom if necessary.

▶ Reeve rope of winch1/winch2 on jib if necessary.

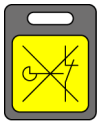

If hoist limit switch weight is on the ground:
▶ Press the *Bypass limit switch* button on control panel *X23*.
▷ Hoist limit switches are bypassed.

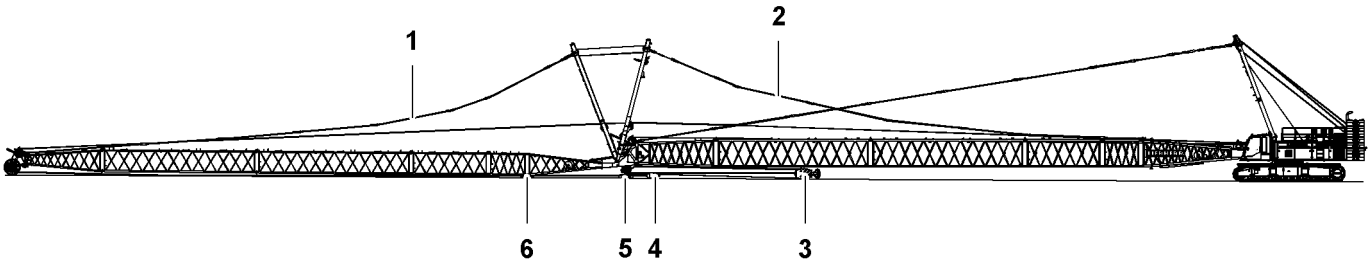

LWN/LR.x/V03.01//Auslieferung/2015-06-03/en

Fig. 5658: Main boom with luffing jib on the ground (illustration of principle)

1	Jib pendant straps	**3**	Pulley block	**5**	Timber
2	Jib backstay straps	**4**	Hook	**6**	Timber

copyright by LIEBHERR

- ▶ Remove rope protection pipes from jib head and jib base section.
- ▶ Detach rope of winch1/winch2 from jib and reeve.
- ▶ Detach rope of winch1/winch2 from main boom and pull back to main boom head.

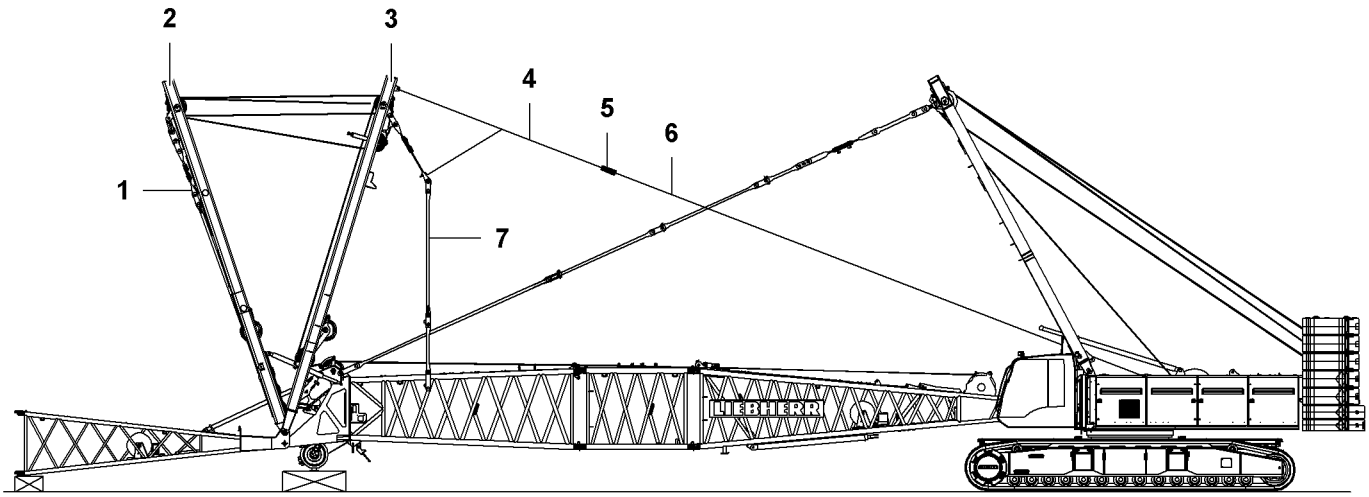

Fig. 5659: Laying down A-frame2/A-frame3 (illustration of principle)

1 A-frame3 equalizer
2 A-frame3
3 A-frame2
4 Belt
5 Pocket lock
6 Rope of winch1/winch2
7 A-frame2 equalizer

- ▶ Attach rope **6** of winch1/winch2 of main boom to belt **5** of A-frame2 **3** with pocket lock **4**.
- ▶ Tension rope **6** of winch1/winch2 from main boom.
- ▶ Lower A-frame3 **2** with jib luffing winch until jib pendant straps rest on jib.
- ▶ Detach jib pendant straps from A-frame3 equalizer **1**.

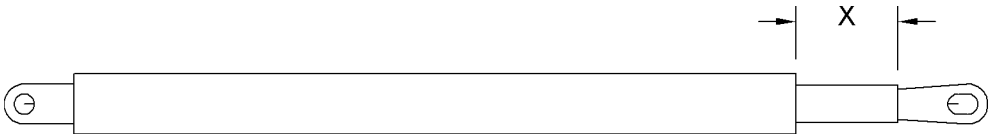

Fig. 5660: Minimum dimension x of the visible piston rod of the hydraulic tilting-back supports

x Minimum dimension
100 mm (3.94“ in)

NOTICE
Inadmissible undercutting of the minimum dimension **x** of the visible piston rods of the hydraulic tilting-back supports!
Damage to machine.

- ▶ Stop erection process of A-frame3 in time.

- ▶ Erect A-frame3 **2** with jib luffing winch.
- ▶ Secure A-frame3 equalizer **1** in transport position.
- ▶ Lower A-frame3 **2** using jib luffing winch until hydraulic tilting-back support are completely extended.

LWN/LR.x/V03.01//Auslieferung/2015-06-03/en

copyright by
LIEBHERR

NOTICE
Collision of pulleys on A-frame2 and gantry pulleys on main boom head!
Damage to machine.

▶ Stop erection process of A-frame2 in time.

▶ Erect A-frame2 **3** and A-frame3 **2** using the rope **6** of winch1/winch2 of the main boom until jib backstay straps rest on main boom.

▶ Detach jib backstay straps from A-frame2 equalizer **7**.

▶ Lower A-frame2 **3** and A-frame3 **2** using the rope **6** of winch1/winch2 of the main boom until hydraulic tilting-back supports are no longer under stress.

▶ Remove pins of the hydraulic tilting-back supports from main boom head.

▶ Erect A-frame2 **3** using the rope **6** of winch1/winch2 of the main boom and at the same time hold A-frame3 **2** in position with the jib luffing winch, until the feet of A-frame2 **3** are about 20 cm (7.87“ in) from A-frame3 **3**.

▶ Lower A-frame2 **3** and A-frame3 **2** using the rope **6** of winch1/winch2 of the main boom until A-frame3 **3** rests on jib base section.

Note

Liebherr recommends:
▶ Reeve supplied auxiliary rope.

▶ Remove rope protection pipes.

▶ Pull out and reeve jib luffing winch rope.

▶ Lower A-frame2 **3** using the rope **6** of winch1/winch2 of the main boom until A-frame2 **3** rests on A-frame3 **3**.

▶ Remove rope **6** of winch1/winch2 of main boom from belt **4** of A-frame2 **3**.

▶ Reinstall rope protection pipes on jib head and jib base section.

▶ Remove and reeve electric lines.

▶ Move lightning rods* on A-frame2 **3** and A-frame3 **3** into transport position.

▶ Separate jib components and jib pendant straps.

▶ Unpin jib base section and remove from main boom head.

▶ Load jib components.

▶ Dismantle main boom and basic machine as described below.

LWN/LR.x/V03.01//Auslieferung/2015-06-03/en

copyright by
LIEBHERR

7.33 Dismantling the fixed jib

DANGER
Incorrect disassembly of the machine!
Toppling of machine, structural breakdown.

▶ Erectability chart, critical angles and boom radius limitations must be observed.

The fixed jib must be disassembled in the reverse order to assembly.

Ensure that the following conditions are fulfilled:
❑ There must be sufficient space available to lay down the assembled booms.
❑ The signalmen and assistants have received instructions.
❑ The necessary tools and approved lifting equipment is available.
❑ Wooden blocks are available for placement.

7.33.1 Brief summary

The following list provides you with a short overview of the steps to be taken when dismantling the fixed jib:

▶ Lay down pulley blocks/hooks.

Note
The overall center of gravity of the machine is moved beyond the first running roller!
Sudden swinging of the boom/jib during the laying down operation.

Liebherr recommends:
▶ When using long main booms and short jibs, follow the procedure for “Blocked Crawlers” (For more information see: 4.27 Blocked crawlers*, page 964) .

▶ Lower main boom.

If a load moment limiter stop is triggered:
▶ Press the button *Load moment limiter assembly/self-lock* on control panel *X23*.

No load chart exist for machines geometry:
▷ Function “load moment limiter assembly” is active.
▷ The LED in the button *Load moment limiter assembly/self-lock* is lit.
▷ Machine functions are enabled without restriction.
▷ Load moment limiter lamps flash orange.

▶ Press the switch *Assembly functions* on control panel *X12*.

The following buttons have to be pressed additionally with machine types LR 1003, LR 1004, LR 1006:

▶ Press the *Cylinder adjustment functions* button on control panel *X23*.

LWN/LR.x/V03.01//Auslieferung/2015-06-03/en

copyright by LIEBHERR

▶ Press the *Extend A-frame1 cylinder* button on control panel *X23*.

DANGER
Obstacles in the way when laying down the jib!
Structural failure.

▶ Make sure that when being laid down, the jib can roll forwards unhindered.

If the lightning rod* on the jib head touches the ground:

▶ Move lightning rod* on the jib head into transport position.

▶ Lower further until main boom and jib are completely on the ground.

▶ Loosen rope of winch1/winch2 from jib and reeve.

▶ Remove the rope of winch1/winch2 from the main boom and pull it back to the boom head section.

▶ Attach the rope of winch1/winch2 of the main boom with pocket lock on A-frame2.

▶ Undo jib pendant straps from A-frame2.

▶ Pull A-frame 2 backwards to relieve the strain on the jib backstay straps.

▶ Detach the jib backstay straps from the connecting links.

▶ Lay down A-frame 2 forwards.

▶ Remove and wind up the electric cables.

▶ Move lightning rod* on A-frame2 into transport position.

▶ Disconnect jib components and jib backstay straps.

▶ Remove the rigid tilting-back supports.

▶ Unpin the jib base section and remove it from the boom head section.

▶ Re-fit the rigid tilting-back supports.

▶ Load jib components.

▶ Dismantle the main boom and basic machine as described below.

LWN/LR.x/V03.01//Auslieferung/2015-06-03/en

copyright by
LIEBHERR

7.34 Disassembling main boom + reducing piece

DANGER
Incorrect disassembly of the machine!

▶ Erectability chart, critical angles and boom radius limitations must be observed.

The main boom + reducing adapter must be disassembled in the reverse order to assembly.

Ensure that the following conditions are fulfilled:
- ❑ There must be sufficient space available to lay down the assembled booms.
- ❑ The signalmen and assistants have received instructions.
- ❑ The necessary tools and approved lifting equipment is available.
- ❑ Wooden blocks are available for placement.

7.34.1 Brief summary

The main boom + reducing adapter are disassembled in exactly the same way as the main boom .

LWN/LR.x/V03.01//Auslieferung/2015-06-03/en

copyright by
LIEBHERR

7.35 Disassembling the main boom

DANGER
The machine has been disassembled incorrectly!
Toppling of machine, structural breakdown.

▶ Erectability chart, critical angles and boom radius limitations must be observed.

The main boom must be disassembled in the reverse order to assembly.

Ensure that the following conditions are fulfilled:
❑ There must be sufficient space available to lay down the assembled booms.
❑ The signalmen and assistants have received instructions.
❑ The necessary tools and approved lifting equipment is available.
❑ Wooden blocks are available to place under the boom.

7.35.1 Brief summary

The following list provides you with a short overview of the steps to be taken when disassembling the main boom:

▶ Lay down the pulley block/load hook.

▶ Lower the main boom.

If a load moment limiter stop is triggered:
▶ Press the button *Load moment limiter assembly/self-lock* on control panel *X23*.

No load chart exist for machines geometry:
▷ Function “load moment limiter assembly” is active.
▷ The LED in the button *Load moment limiter assembly/self-lock* is lit.
▷ Machine functions are enabled without restriction.
▷ Load moment limiter lamps flash orange.

▶ Press the switch *Assembly functions* on control panel *X12*.

The following buttons have to be pressed additionally with machine types LR 1003, LR 1004, LR 1006:

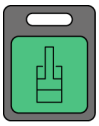

▶ Press the button *cylinder adjustment functions* on control panel *X23*.

▶ Press the *Extend A-frame1 cylinder* button on control panel *X23*.

DANGER
Obstacles when laying down the main boom!
Structural failure.

▶ Make sure that the auxiliary jib (if present) can roll forwards unhindered when it is laid down.

LWN/LR.x/V03.01//Auslieferung/2015-06-03/en

copyright by
LIEBHERR

▶ Continue to lower the main boom until it is just above the ground.

If an attached auxiliary jib touches the ground:
▶ Ensure that auxiliary jib pendant straps fold up.

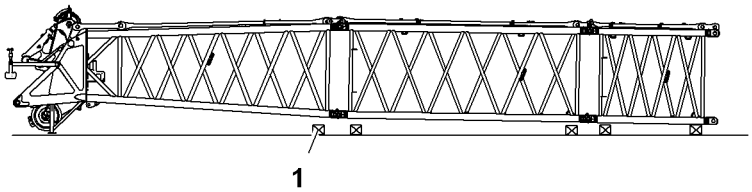

Fig. 5669: Supporting the main boom with wooden blocks (illustration of principle)

1 Wooden blocks

▶ Place wooden blocks to the left and right of the pin connection points underneath the chord pipe of the main boom sections.

WARNING
Impermissible voltage build-up in main boom!
Serious injury.

▶ Ensure that boom head section can slide in a longitudinal direction.

▶ If necessary install a layer of suitable support material under the feet of the main boom head section.

▶ Lower main boom until main boom rests on wooden blocks.

▶ Loosen rope of winch1/winch2 from main boom and reeve.

▶ Remove and wind up the electric cables from the main boom.

▶ Move the lightning rods* into transport position.

▶ Connecting the equalizer on A-frame1 to the main boom base section.

WARNING
Never stand in the inside of the main boom sections during disassembly!
Serious injury.

▶ Never go inside the main boom sections.

WARNING
Incorrect slacking of the rope on the main boom winch!
Main boom falls into slack rope after unpinning of the lower double-taper pins.

▶ Ensure that there is no slack rope on the main boom winch.

▶ Remove the first, bottom double-taper pin from the main boom base section.

WARNING
Impermissible voltage in main boom!
Sudden movement of main boom whilst unpinning the second, lower double-taper pin from the main boom base section.

When the first, lower double-taper pin on the main boom base section is unpinned:
▶ Visually check that the pin connection points are aligned.

LWN/LR.x/V03.01//Auslieferung/2015-06-03/en

copyright by
LIEBHERR

- ▶ Make sure that pin connection points are aligned correctly.
- ▶ Remove the second, bottom double-taper pin from the main boom base section.
- ▶ Unwind the main boom luffing winch.
  - ▷ The main boom and main boom base section fold out at the bottom pin connection point.
  - ▷ The main boom is lowered onto wooden blocks.
  - ▷ Main boom head section moves slightly forwards.
- ▶ Remove the top double-taper pins from the main boom base section.
- ▶ Drive the basic machine to the main boom head section.
- ▶ Lash rigging to main boom on the pin connection point between the main boom head section and the first main boom section with rigging.
- ▶ Remove bottom double-taper pins from main boom head.
- ▶ Lower lifting equipment.
  - ▷ Main boom and main boom head fold out at the bottom pin connection point.
  - ▷ The main boom is lowered onto wooden blocks.
- ▶ Remove the upper double-taper pins from the main boom head section.
- ▶ Load the main boom head section.
- ▶ Unpin the main boom sections.
- ▶ Load main boom sections.
- ▶ Dismantle the basic machine as described below.

LWN/LR.x/V03.01//Auslieferung/2015-06-03/en

copyright by
LIEBHERR

7.36 Disassembling the basic machine

DANGER
Incorrect disassembly of the machine!
Toppling of machine, structural breakdown.

- Observe all critical angles and boom radius limitations as described under "Assembly".

The basic machine must be disassembled in the reverse order to assembly.

7.36.1 Brief summary

The following list provides you with a short overview of the steps to be taken when disassembling the basic machine.

- Switch on assembly mode functions.
- Switch on cylinder adjustment functions.
- Lower the rear counterweight.
- Remove the counterweight hoisting cylinder chains from the rear counterweight.
- Remove slinging plates from rear counterweight.
- Undo rear counterweight lashing links and remove.
- Disassemble rear counterweight using the specified sling gear and load the counterweight slabs.
- Remove platforms on the undercarriage.
- Remove and load the carbody counterweight slabs.
- Swing the jack swing brackets into the support position and bolt them.
- Lay the support plates under the jacks.
- Attach the transport safety with crawler side frames.
- Raise the basic machine using the jacks.
- Disconnect the hydraulic lines from the crawler side frames.
- Remove and load the crawler side frames.
- Position the transport vehicle under the basic machine.
- Place the basic machine on the transport vehicle.
- Fully retract the jack.
- Stow the support plates away.
- Swing the jack swing brackets into the transport position and bolt them.
- Lash basic machine on transport vehicle.
- Lay down A-frame1 backwards.

When A-frame1 triggers the limit switch *A-frame1, rear limit switch*:

- Press and hold the button *Retract A-frame1 cylinder* on control panel *X23* until A-frame1 is in transport position.

- Retract the tilting back support cylinders.

LWN/LR.x/V03.01//Auslieferung/2015-06-03/en

copyright by LIEBHERR

- Switch off machine.

CAUTION
Hot exhaust components!
Risk of burns.

- Only touch the exhaust pipe when it is cold.

- Remove the intermediate exhaust section and put on the offset.
- Fold the railing on the uppercarriage down.
- Remove the ladder.
- Remove platforms on the uppercarriage.
- Use the uppercarriage locking device to prevent the uppercarriage from turning.
- Move the cabin's platforms into transport position.
- Swing the cabin into transport position and bolt it.
- Close the cabin and secure the machine against unauthorized start-up.
- Switch off the battery main switch.

LWN/LR.x/V03.01//Auslieferung/2015-06-03/en

copyright by
LIEBHERR

Transport 8

8 Transport

8 Transport

The chapter **Transport** deals with the following subjects:
– Transporting the machine
– Transporting the components

8.1 Loading the basic machine with an assist crane

There are four different variants in which the basic machine can be loaded:
– without crawler side frame, carbody counterweight and rear counterweight
– with crawler side frame
– with crawler side frame and carbody counterweight
– with crawler side frame, carbody counterweight and rear counterweight

Ensure that the following conditions are fulfilled:
❑ A signalman is available.
❑ Equipment is secured against accidental movement.
❑ An adequate safety distance from electrical power lines or contact lines is maintained.
❑ Transport vehicle is secured against accidental movement.
❑ Adequate lighting is available for working in poor light.

8.1.1 Loading basic machine with undercarriage with fixed track width

Loading the basic machine without crawler side frame, carbody counterweight and rear counterweight

DANGER
Machine loaded incorrectly!
Toppling of machine, damage to machine.

▶ Only use lifting equipment and crossbars that meet the minimum requirements (see: tab. 573, page 1744) .

Make sure the following prerequisites are met:
❑ Crawler side frame, carbody counterweight and rear counterweight are detached from the basic machine.
❑ Main boom base section is detached from basic machine.
❑ Cabin is lowered, swung into transport position and secured.
❑ Counterweight hoisting cylinders are retracted.
❑ Tilting-back supports are retracted.

LWN/LR.x/V03.01//Auslieferung/2015-06-03/en

copyright by LIEBHERR

- ❑ A-frame1 is folded back in transport position and A-frame1 cylinders are retracted.
- ❑ Jacks on the undercarriage are pinned in transport position and retracted.
- ❑ Additional floodlights* (if available) are deinstalled.
- ❑ All loose parts are secured to prevent slippage and falling.
- ❑ A crossbar with a suitable capacity is available.
- ❑ Lifting equipment is in good condition and approved for use.

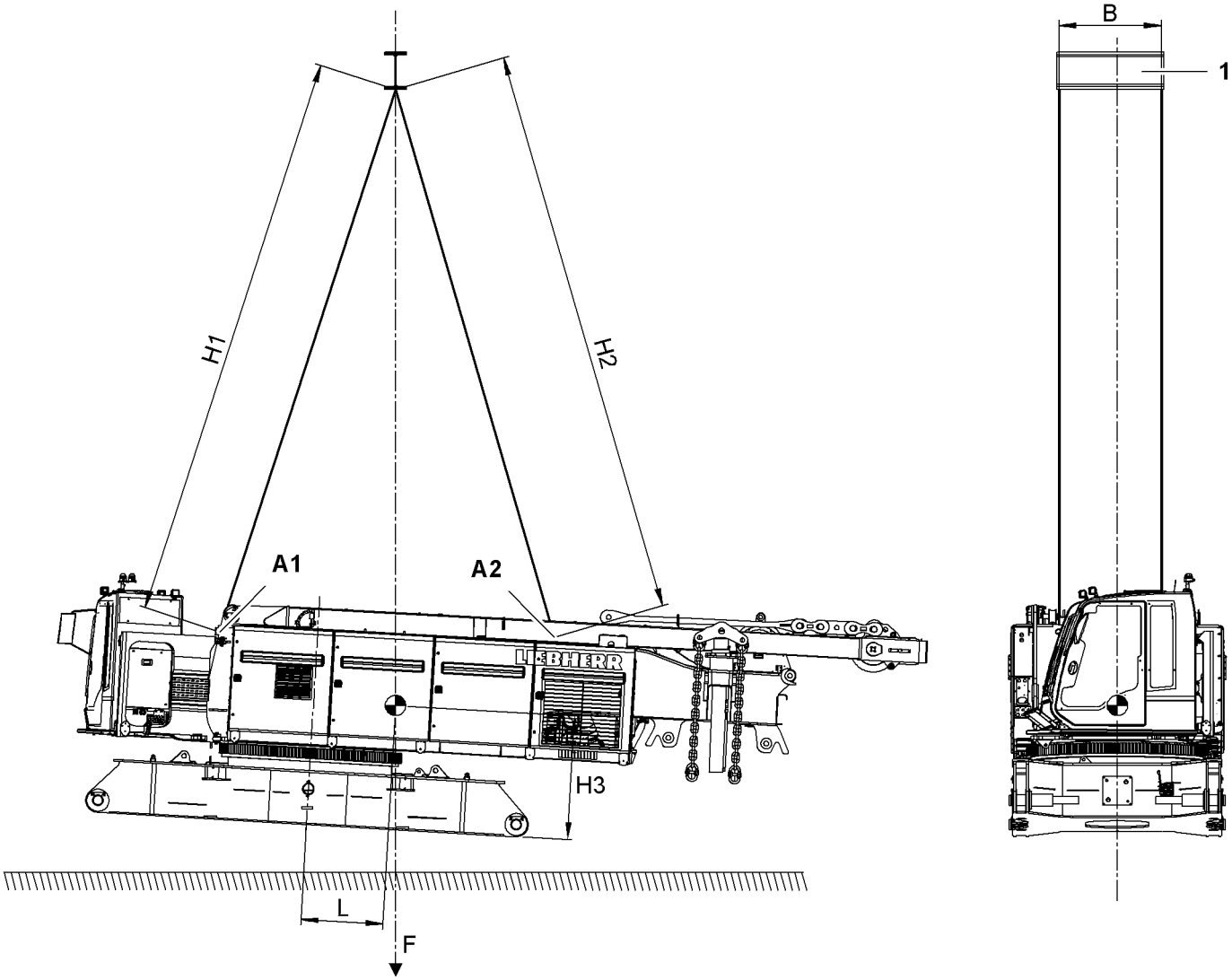

Fig. 5671: Loading the basic machine without crawler side frame, carbody counterweight and rear counterweight - overview

1 Crossbar

The mass and center of gravity may deviate from the values shown below depending on the as-delivered configuration, the liquid level in the tanks, and generally accepted tolerances.

Name		Value
H1	Length of front round slings	min. 8000 mm (26‘ 3“ ft-in)
	Load-bearing capacity of front round slings	min. 30000 kg (66,138 lb)

LWN/LR.x/V03.01//Auslieferung/2015-06-03/en

copyright by LIEBHERR

Name		Value
H2	Length of rear round slings	min. 8000 mm (26‘ 3“ ft-in)
	Capacity of rear round slings	min. 30000 kg (66,138 lb)
A1	Load-bearing capacity of front shackles	min. 35000 kg (77,161 lb)
A2	Load-bearing capacity of rear shackles	min. 35000 kg (77,161 lb)
B	Distance from rigging points on crossbar	1360 mm (4‘ 6“ ft-in) to 1520 mm (5‘ ft-in)
H3	Distance center of gravity to bottom edge of center part	1741 mm 5‘ 9“ ft-in
L	Distance from center of gravity to rotation axis	1153 mm 3‘ 9“ ft-in
F	Transport weight	48000 kg 105,820 lb

Tab. 573: Technical data for loading the basic machine without crawler side frame, carbody counterweight and rear counterweight

LWN/LR.x/V03.01//Auslieferung/2015-06-03/en

copyright by
LIEBHERR

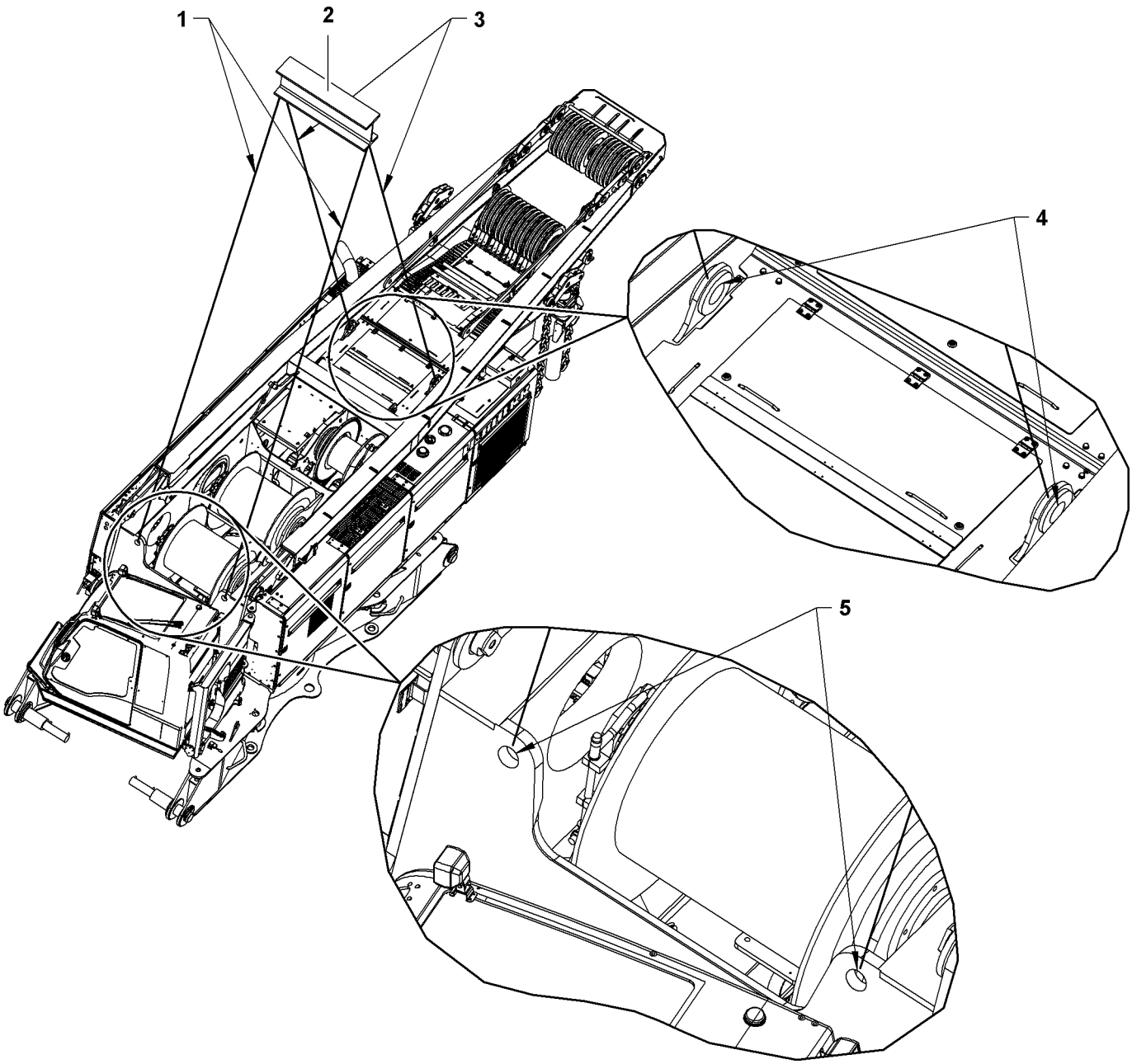

Fig. 5672: Loading the basic machine without crawler side frame, carbody counterweight and rear counterweight - rigging points

1 Front round slings
2 Crossbar
3 Rear round slings
4 Rear rigging points
5 Front rigging points

- ▶ Lash front round slings **1** to the rigging points **5** using shackles.
- ▶ Lash rear round slings **3** to the rigging points **4** using shackles.
- ▶ Carefully raise and load the basic machine.

LWN/LR.x/V03.01//Auslieferung/2015-06-03/en

copyright by
LIEBHERR

Loading the basic machine with crawler side frame

DANGER
Machine loaded incorrectly!
Toppling of machine, damage to machine.

▶ Only use lifting equipment and crossbars that meet the minimum requirements (see: tab. 574, page 1748) .

Make sure the following prerequisites are met:
- ❑ Carbody counterweight and rear counterweight are detached from basic machine.
- ❑ Main boom base section is detached from basic machine.
- ❑ Cabin is lowered, swung into transport position and secured.
- ❑ Counterweight hoisting cylinders are retracted.
- ❑ Tilting-back supports are retracted.
- ❑ A-frame1 is folded back in transport position and A-frame1 cylinders are retracted.
- ❑ Jacks on the undercarriage are pinned in transport position and retracted.
- ❑ Additional floodlights* (if available) are deinstalled.
- ❑ All loose parts are secured to prevent slippage and falling.
- ❑ A crossbar with a suitable load-bearing capacity is available.
- ❑ Sling gear is in good condition and approved for use.

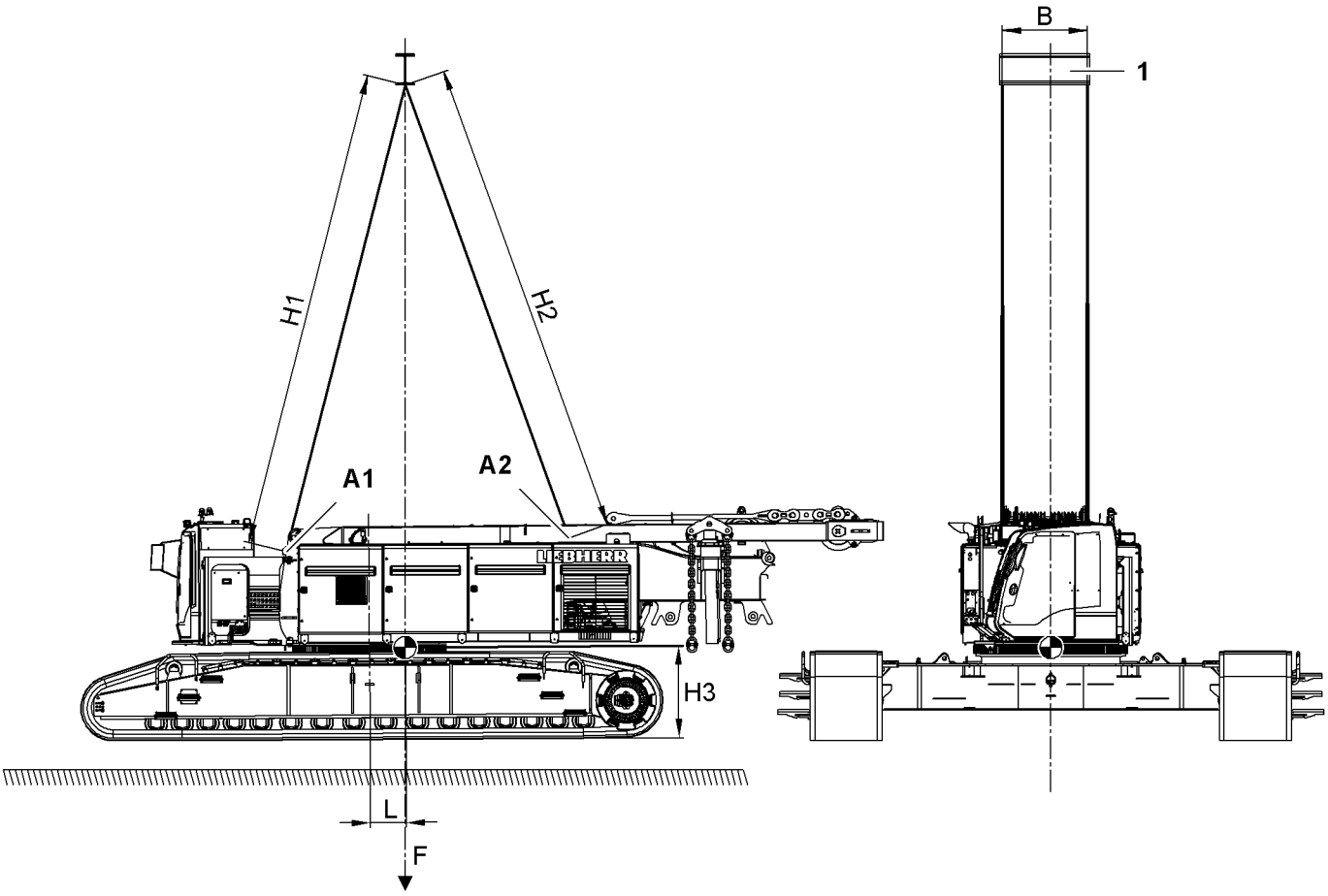

Fig. 5673: Loading the basic machine with crawler side frame - overview

1 Crossbar

LWN/LR.x/V03.01//Auslieferung/2015-06-03/en

copyright by LIEBHERR

The mass and center of gravity may deviate from the values shown below depending on the as-delivered configuration, the liquid level in the tanks, and generally accepted tolerances.

Name		Value
H1	Length of front round slings	min. 8000 mm (26‘ 3“ ft-in)
	Load-bearing capacity of front round slings	min. 40000 kg (88,184 lb)
H2	Length of rear round slings	min. 8000 mm (26‘ 3“ ft-in)
	Capacity of rear round slings	min. 40000 kg (88,184 lb)
A1	Load-bearing capacity of front shackles	min. 55000 kg (121,252 lb)
A2	Load-bearing capacity of rear shackles	min. 55000 kg (121,252 lb)
B	Distance from rigging points on crossbar	1340 mm (4‘ 5“ ft-in) to 1500 mm (4‘ 11“ ft-in)
H3	Distance from center of gravity to bottom edge of crawler side frame	1527 mm 5‘ ft-in
L	Distance from center of gravity to rotation axis	592 mm 1‘ 11“ ft-in
F	Transport weight	92000 kg 202,822 lb

Tab. 574: Technical data for loading the basic machine with crawler side frame

LWN/LR.x/V03.01//Auslieferung/2015-06-03/en

copyright by
LIEBHERR

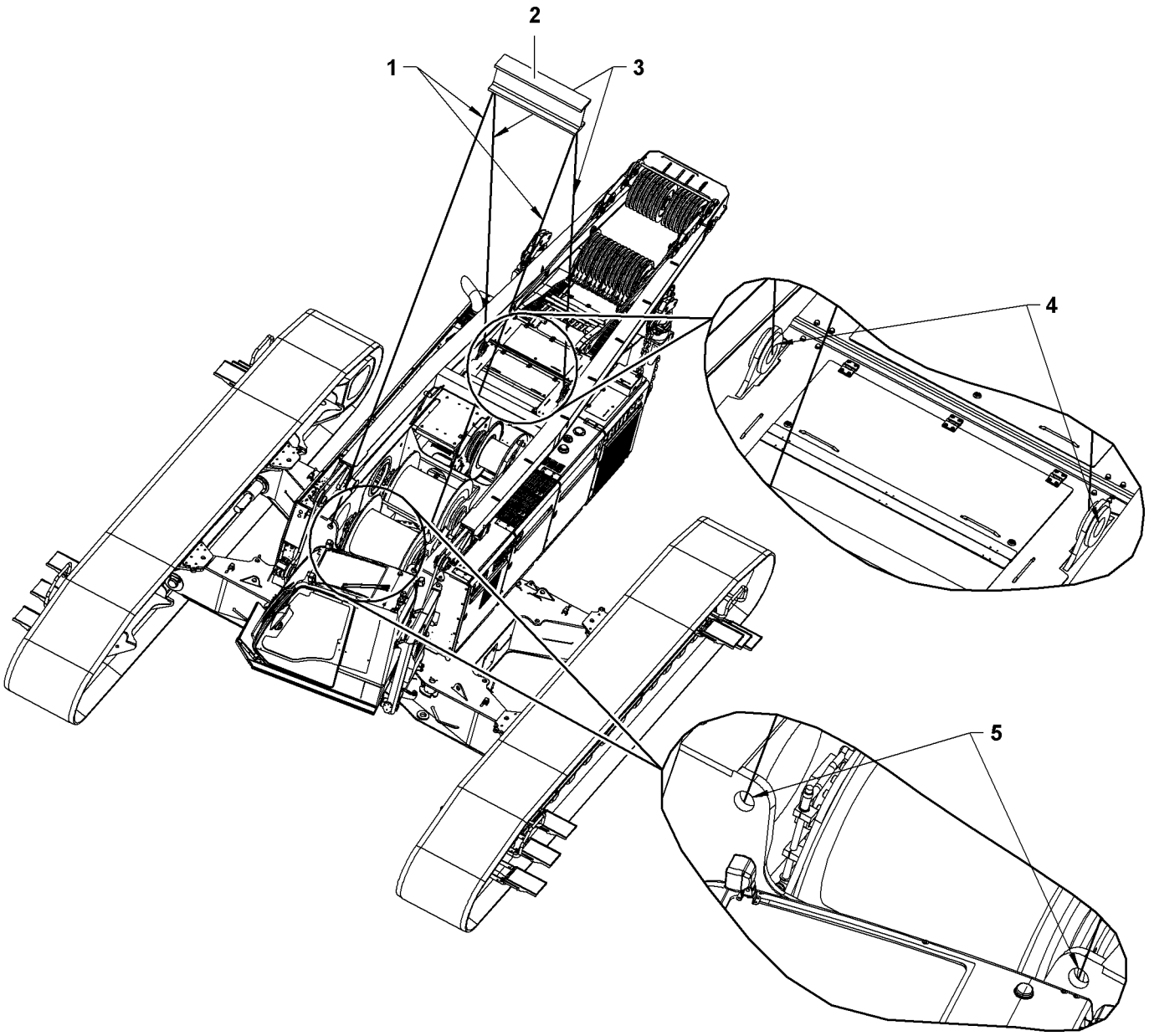

Fig. 5674: Loading the basic machine with crawler side frame - rigging points

1	Front round slings	**3**	Rear round slings	**5**	Front rigging points
2	Crossbar	**4**	Rear rigging points		

- ▶ Lash front round slings **1** to the rigging points **5** using shackles.
- ▶ Lash rear round slings **3** to the rigging points **4** using shackles.
- ▶ Carefully raise and load the basic machine.

LWN/LR.x/V03.01//Auslieferung/2015-06-03/en

copyright by
LIEBHERR

Loading the basic machine with crawler side frame and carbody counterweight

DANGER
Machine loaded incorrectly!
Toppling of machine, damage to machine.

▶ Only use lifting equipment and crossbars that meet the minimum requirements (see: tab. 575, page 1751) .

Make sure the following prerequisites are met:
- ❑ The rear counterweight is removed from the basic machine.
- ❑ Main boom base section is detached from basic machine.
- ❑ Cabin is lowered, swung into transport position and secured.
- ❑ Counterweight hoisting cylinders are retracted.
- ❑ Tilting-back supports are retracted.
- ❑ A-frame1 is folded back in transport position and A-frame1 cylinders are retracted.
- ❑ Jacks on the undercarriage are pinned in transport position and retracted.
- ❑ Additional floodlights* (if available) are deinstalled.
- ❑ All loose parts are secured to prevent slippage and falling.
- ❑ A crossbar with a suitable load-bearing capacity is available.
- ❑ Sling gear is in good condition and approved for use.

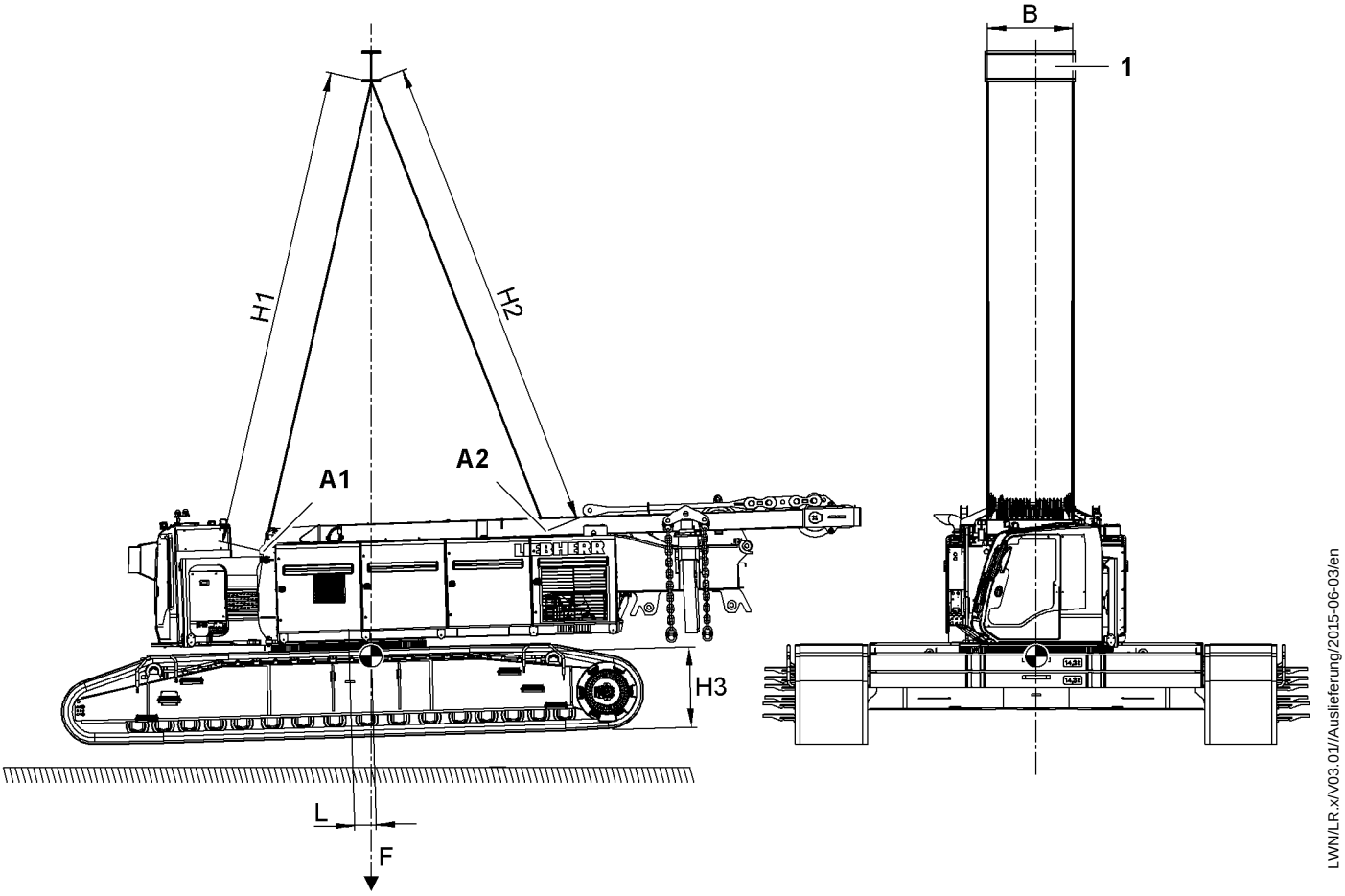

Fig. 5675: Loading the basic machine with crawler side frame and carbody counterweight - overview

1 Crossbar

copyright by LIEBHERR

The mass and center of gravity may deviate from the values shown below depending on the as-delivered configuration, the liquid level in the tanks, and generally accepted tolerances.

Name		Value
H1	Length of front round slings	min. 8000 mm (26‘ 3“ ft-in)
	Load-bearing capacity of front round slings	min. 80000 kg (176,367 lb)
H2	Length of rear round slings	min. 8000 mm (26‘ 3“ ft-in)
	Capacity of rear round slings	min. 50000 kg (110,230 lb)
A1	Load-bearing capacity of front shackles	min. 85000 kg (187,390 lb)
A2	Load-bearing capacity of rear shackles	min. 55000 kg (121,252 lb)
B	Distance from rigging points on crossbar	1340 mm (4‘ 5“ ft-in) to 1500 mm (4‘ 11“ ft-in)
H3	Distance from center of gravity to bottom edge of crawler side frame	1335 mm 4‘ 5“ ft-in
L	Distance from center of gravity to rotation axis	365 mm 1‘ 2“ ft-in
F	Transport weight	150000 kg 330,688 lb

Tab. 575: Technical data for loading the basic machine with crawler side frame and carbody counterweight

LWN/LR.x/V03.01//Auslieferung/2015-06-03/en

copyright by
LIEBHERR

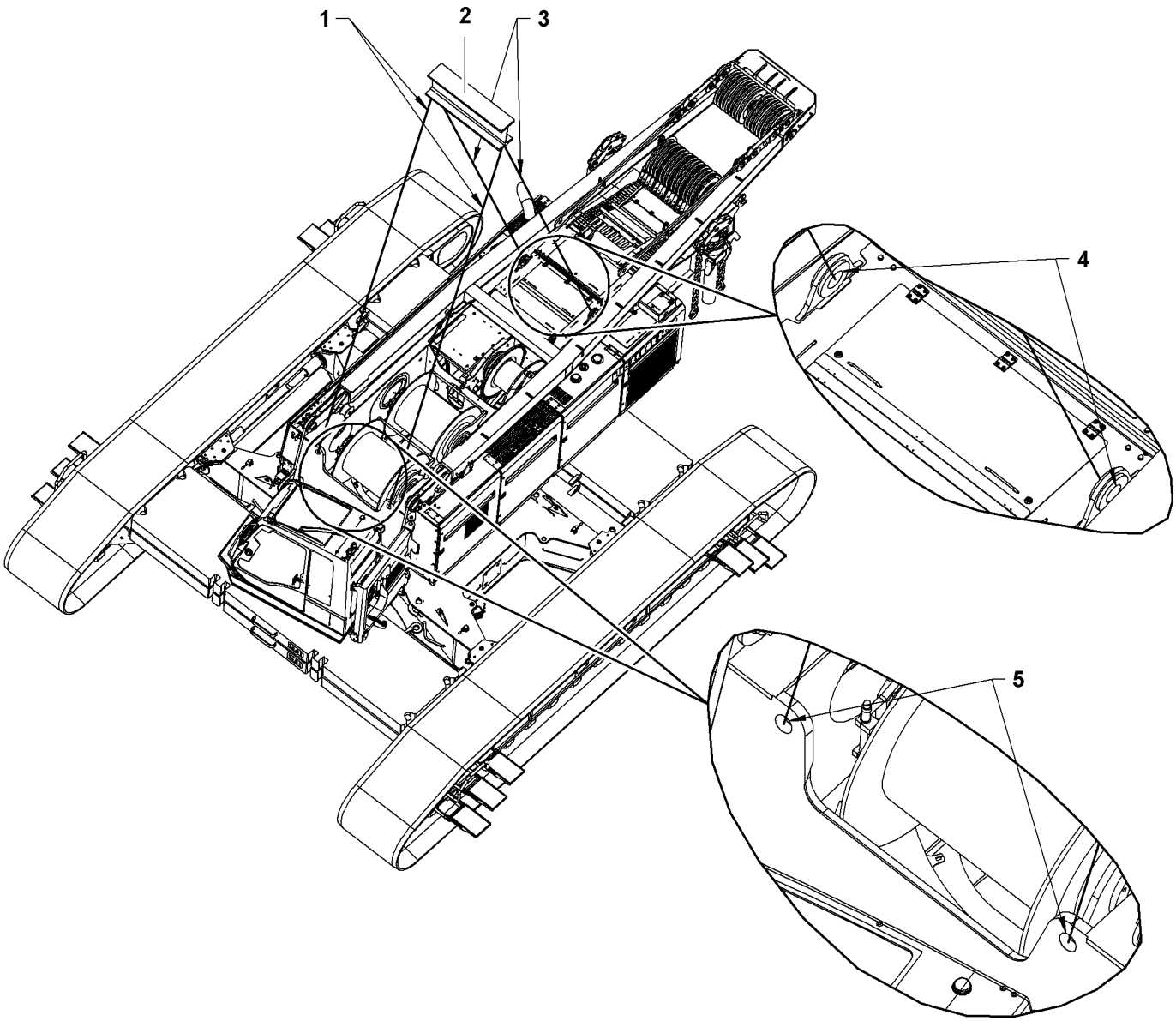

Fig. 5676: Loading the basic machine with crawler side frame and carbody counterweight - rigging points

1	Front round slings	**3**	Rear round slings	**5**	Front rigging points
2	Crossbar	**4**	Rear rigging points		

- ▶ Lash front round slings **1** to the rigging points **5** using shackles.
- ▶ Lash rear round slings **3** to the rigging points **4** using shackles.
- ▶ Carefully raise and load the basic machine.

Loading the basic machine with crawler side frame, carbody counterweight and rear counterweight

DANGER
Machine loaded incorrectly!
Toppling of machine, damage to machine.

- ▶ Only use lifting equipment and crossbars that meet the minimum requirements (see: tab. 576, page 1753) .

LWN/LR.x/V03.01//Auslieferung/2015-06-03/en

Make sure the following prerequisites are met:

- ❑ Main boom base section is detached from basic machine.
- ❑ Cabin is lowered, swung into transport position and secured.
- ❑ Counterweight hoisting cylinders are retracted.
- ❑ Tilting-back supports are retracted.
- ❑ A-frame1 is folded back in transport position and A-frame1 cylinders are retracted.
- ❑ Jacks on the undercarriage are pinned in transport position and retracted.
- ❑ Additional floodlights* (if available) are deinstalled.
- ❑ All loose parts are secured to prevent slippage and falling.
- ❑ A crossbar with a suitable load-bearing capacity is available.
- ❑ Sling gear is in good condition and approved for use.

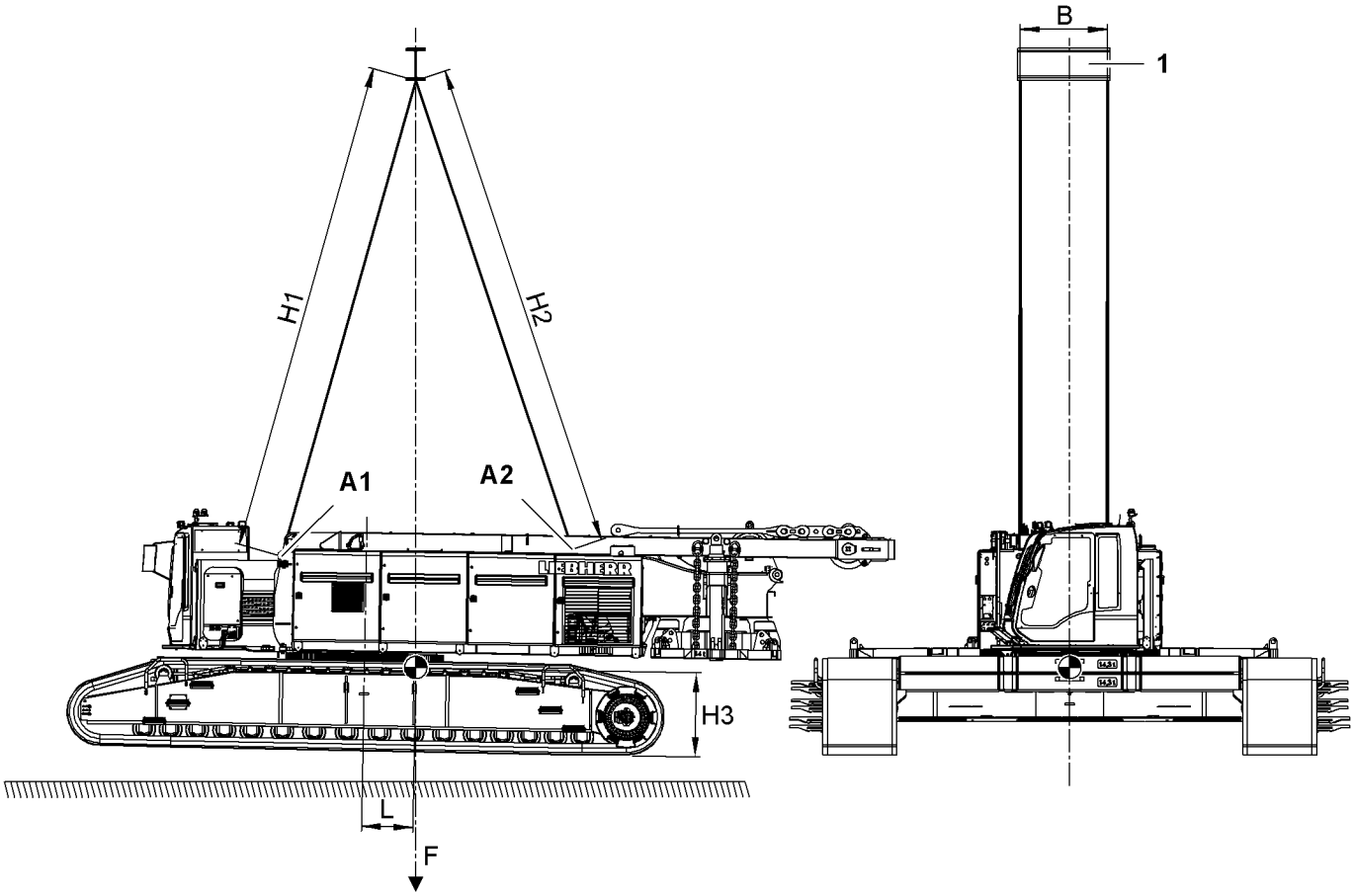

Fig. 5677: Loading the basic machine with crawler side frame, carbody counterweight and rear counterweight - overview

1 Crossbar

The mass and center of gravity may deviate from the values shown below depending on the as-delivered configuration, the liquid level in the tanks, and generally accepted tolerances.

Name		Value
H1	Length of front round slings	min. 8000 mm (26‘ 3“ ft-in)
	Load-bearing capacity of front round slings	min. 80000 kg (176,367 lb)
H2	Length of rear round slings	min. 8000 mm (26‘ 3“ ft-in)
	Capacity of rear round slings	min. 60000 kg (132,275 lb)

LWN/LR.x/V03.01//Auslieferung/2015-06-03/en

copyright by
LIEBHERR

Name		Value
A1	Load-bearing capacity of front shackles	min. 85000 kg (187,390 lb)
A2	Load-bearing capacity of rear shackles	min. 55000 kg (121,252 lb)
B	Distance from rigging points on crossbar	1340 mm (4‘ 5“ ft-in) to 1500 mm (4‘ 11“ ft-in)
H3	Distance from center of gravity to bottom edge of crawler side frame	1366 mm 4‘ 6“ ft-in
L	Distance from center of gravity to rotation axis	831 mm 2‘ 9“ ft-in
F	Transport weight	165000 kg 363,757 lb

Tab. 576: Technical data for loading the basic machine with crawler side frame, carbody counterweight and rear counterweight

LWN/LR.x/V03.01//Auslieferung/2015-06-03/en

copyright by
LIEBHERR

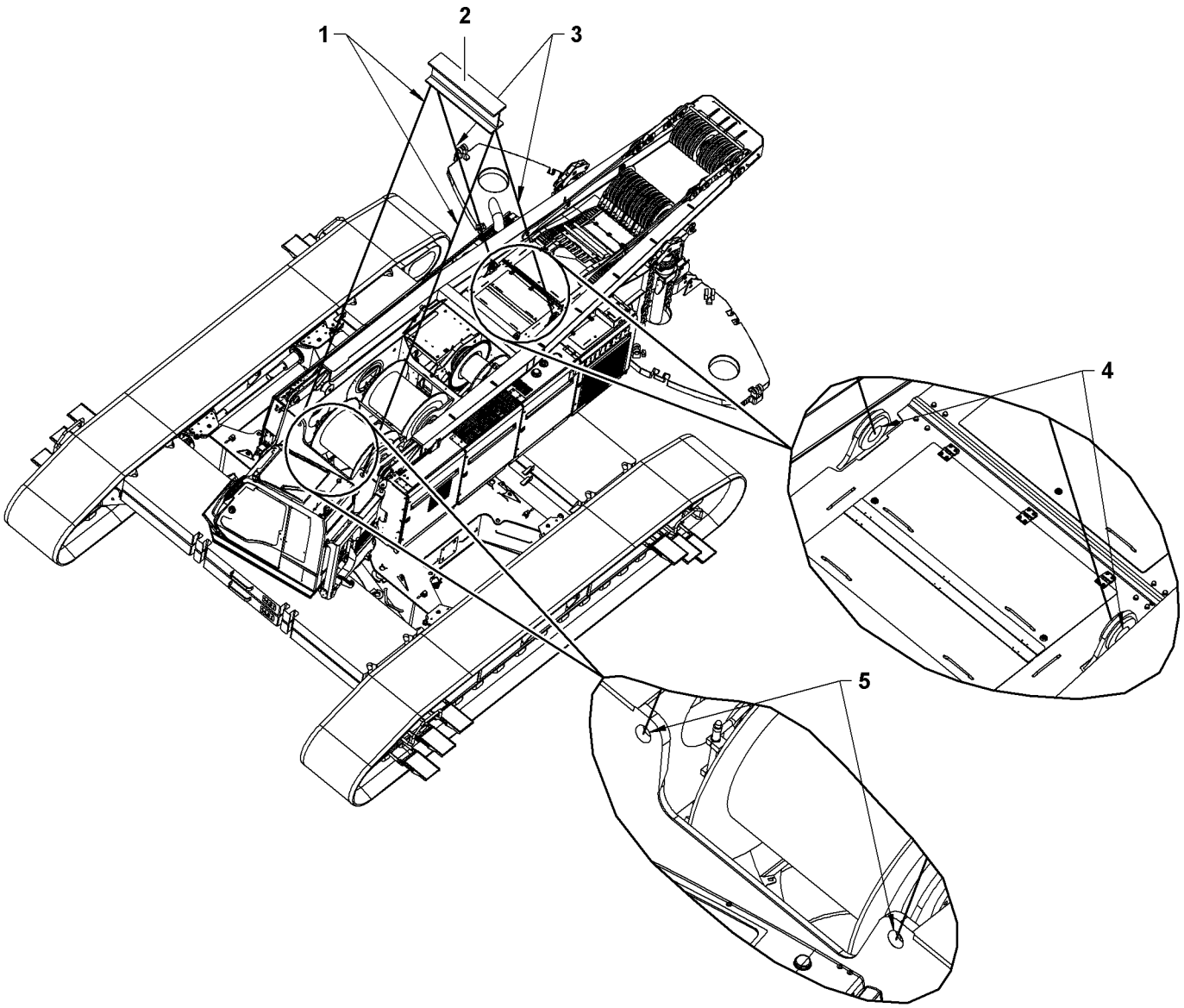

Fig. 5678: Loading the basic machine with crawler side frame, carbody counterweight and rear counterweight - rigging points

1	Front round slings	**3**	Rear round slings	**5**	Front rigging points
2	Crossbar	**4**	Rear rigging points		

- ▶ Lash front round slings **1** to the rigging points **5** using shackles.
- ▶ Lash rear round slings **3** to the rigging points **4** using shackles.
- ▶ Carefully raise and load the basic machine.

LWN/LR.x/V03.01//Auslieferung/2015-06-03/en

copyright by
LIEBHERR

8.1.2 Loading basic machine with undercarriage with adjustable track width

Loading basic machine without crawler side frame, carbody counterweight and rear counterweight

DANGER
Improper loading of machine!
Toppling of machine, damage to machine.

▶ Only use sling gear and crossbars that meet the minimum requirements (see: tab. 577, page 1757) .

Make sure the following prerequisites are met:
- ❑ Crawler side frame, carbody counterweight and rear counterweight are detached from the basic machine.
- ❑ Main boom base section is detached from basic machine.
- ❑ Cabin is lowered, swung into transport position and secured.
- ❑ Counterweight hoisting cylinders are retracted.
- ❑ Tilting-back supports are retracted.
- ❑ A-frame1 is folded back in transport position and A-frame1 cylinders are retracted.
- ❑ Jacks on the undercarriage are pinned in transport position and retracted.
- ❑ Additional floodlights* (if available) are uninstalled.
- ❑ All loose parts are secured to prevent slippage and falling.
- ❑ A crossbar with a suitable load-bearing capacity is available.
- ❑ Sling gear is in good condition and approved for use.

LWN/LR.x/V03.01//Auslieferung/2015-06-03/en

copyright by
LIEBHERR

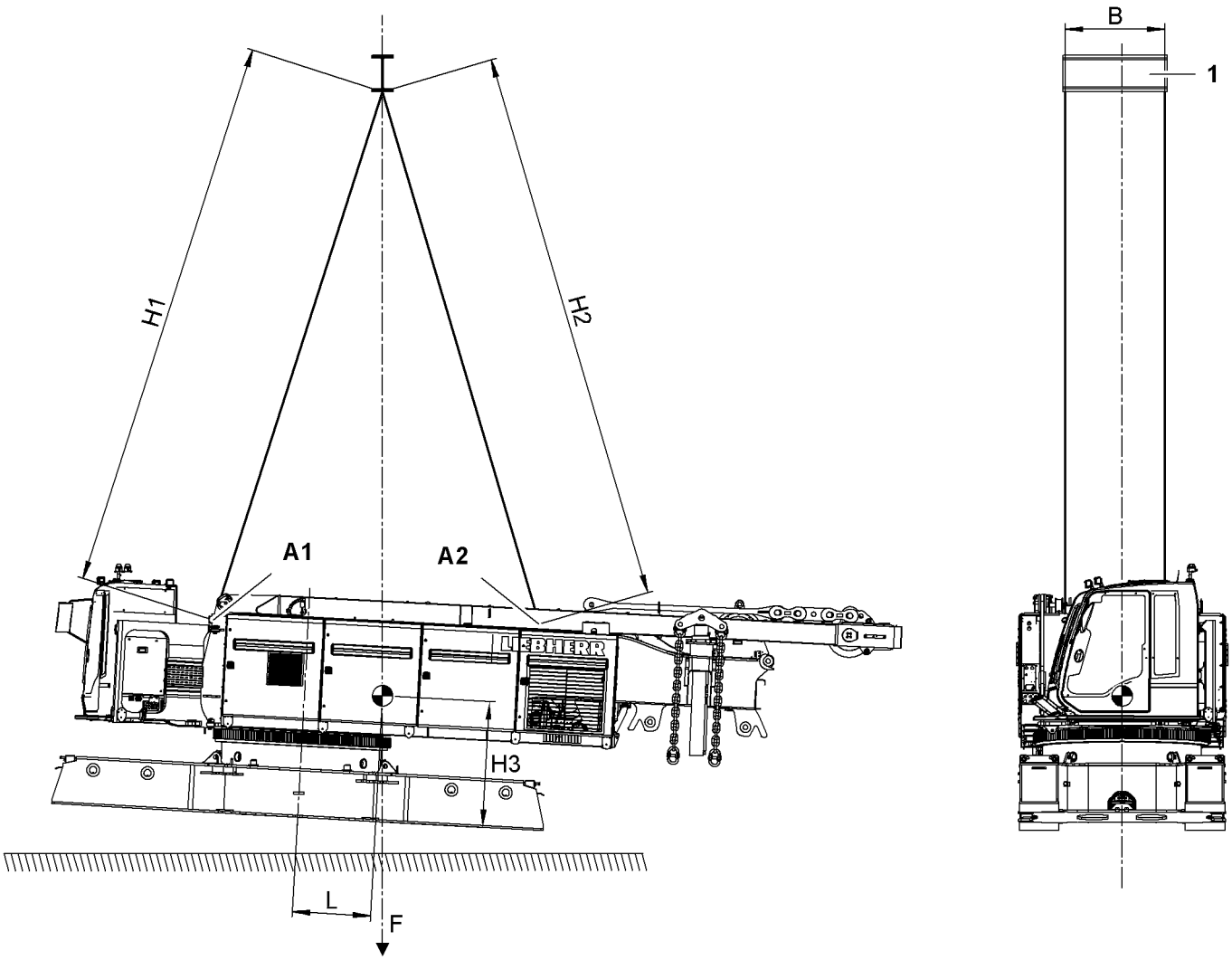

Fig. 5679: Loading basic machine without crawler side frame, carbody counterweight and rear counterweight - overview

1 Crossbar

The mass and center of gravity may deviate from the values shown below depending on the as-delivered configuration, levels in the tanks, and generally accepted tolerances.

Name		Value
H1	Length front round slings	min. 8000 mm (26‘ 3“ ft-in)
	Load-bearing capacity front round slings	min. 30000 kg (66,138 lb)
H2	Length rear round slings	min. 8000 mm (26‘ 3“ ft-in)
	Load-bearing capacity rear round slings	min. 30000 kg (66,138 lb)
A1	Load-bearing capacity front shackles	min. 35000 kg (77,161 lb)
A2	Load-bearing capacity rear shackles	min. 35000 kg (77,161 lb)
B	Distance rigging points on crossbar	1360 mm (4‘ 6“ ft-in) to 1520 mm (5‘ ft-in)
H3	Distance center of gravity to bottom edge of center part	1814 mm 5‘ 11“ ft-in

LWN/LR.x/V03.01//Auslieferung/2015-06-03/en

copyright by
LIEBHERR

Name		Value
L	Distance from center of gravity to rotation axis	1129 mm 3‘ 8“ ft-in
F	Transport weight	46000 kg 101,411 lb

Tab. 577: Technical data loading basic machine without crawler side frame, carbody counterweight and rear counterweight

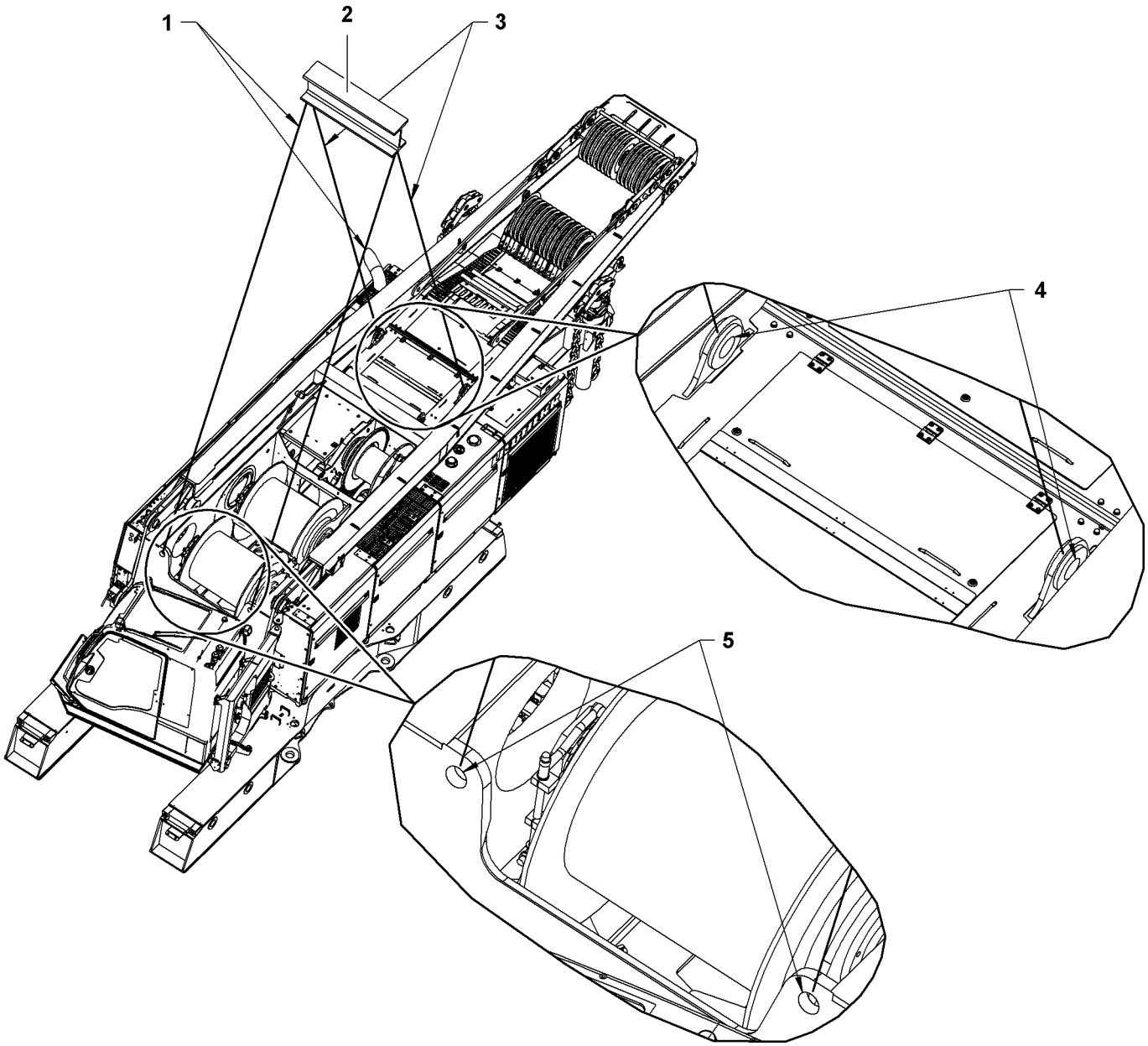

Fig. 5680: Loading basic machine without crawler side frame, carbody counterweight and rear counterweight - rigging points

1 Front round slings
2 Crossbar
3 Rear round slings
4 Rear rigging points
5 Front rigging points

▶ Lash front round slings **1** to the rigging points **5** using shackles.

LWN/LR.x/V03.01//Auslieferung/2015-06-03/en

▶ Lash rear round slings **3** to the rigging points **4** using shackles.

▶ Carefully lift and load basic machine.

Loading basic machine with crawler side frame

DANGER
Improper loading of machine!
Toppling of machine, damage to machine.

▶ Only use sling gear and crossbars that meet the minimum requirements (see: tab. 578, page 1760) .

Make sure the following prerequisites are met:
- ❑ Carbody counterweight and rear counterweight are detached from basic machine.
- ❑ Main boom base section is detached from basic machine.
- ❑ Cabin is lowered, swung into transport position and secured.
- ❑ Counterweight hoisting cylinders are retracted.
- ❑ Tilting-back supports are retracted.
- ❑ A-frame1 is folded back in transport position and A-frame1 cylinders are retracted.
- ❑ Jacks on the undercarriage are pinned in transport position and retracted.
- ❑ Additional floodlights* (if available) are uninstalled.
- ❑ All loose parts are secured to prevent slippage and falling.
- ❑ A crossbar with a suitable load-bearing capacity is available.
- ❑ Sling gear is in good condition and approved for use.

LWN/LR.x/V03.01//Auslieferung/2015-06-03/en

copyright by
LIEBHERR

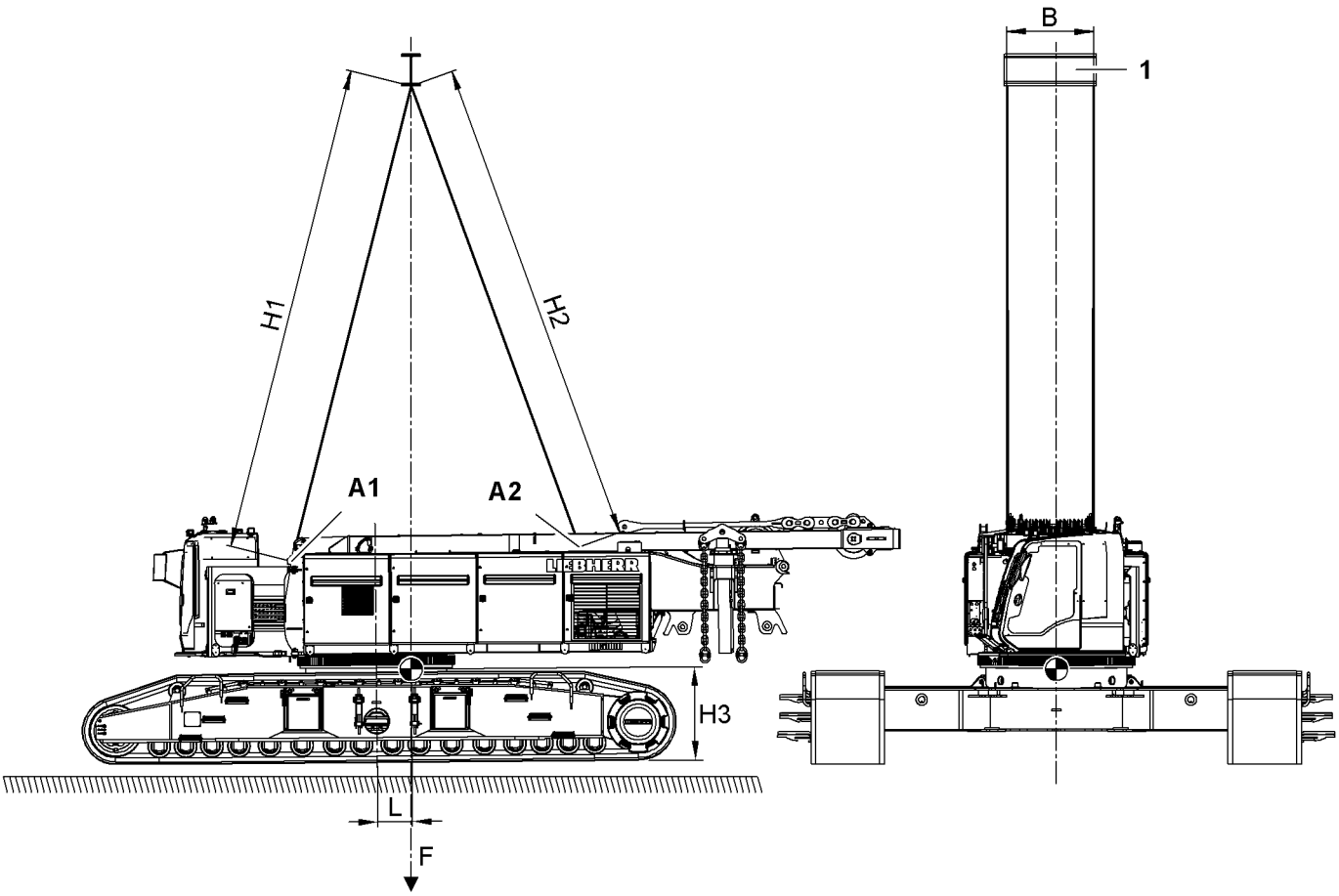

Fig. 5681: Loading basic machine with crawler side frame - overview

1 Crossbar

The mass and center of gravity may deviate from the values shown below depending on the as-delivered configuration, levels in the tanks, and generally accepted tolerances.

Name		Value
H1	Length front round slings	min. 8000 mm (26‘ 3“ ft-in)
	Load-bearing capacity front round slings	min. 40000 kg (88,184 lb)
H2	Length rear round slings	min. 8000 mm (26‘ 3“ ft-in)
	Load-bearing capacity rear round slings	min. 30000 kg (66,138 lb)
A1	Load-bearing capacity front shackles	min. 55000 kg (121,252 lb)
A2	Load-bearing capacity rear shackles	min. 35000 kg (77,161 lb)
B	Distance rigging points on crossbar	1340 mm (4‘ 5“ ft-in) to 1500 mm (4‘ 11“ ft-in)
H3	Distance from center of gravity to bottom edge of crawler side frame	1519 mm 5‘ ft-in
L	Distance from center of gravity to rotation axis	568 mm 1‘ 10“ ft-in
F	Transport weight	91000 kg 200,618 lb

Tab. 578: Technical data loading basic machine with crawler side frame

LWN/LR.x/V03.01//Auslieferung/2015-06-03/en

copyright by
LIEBHERR

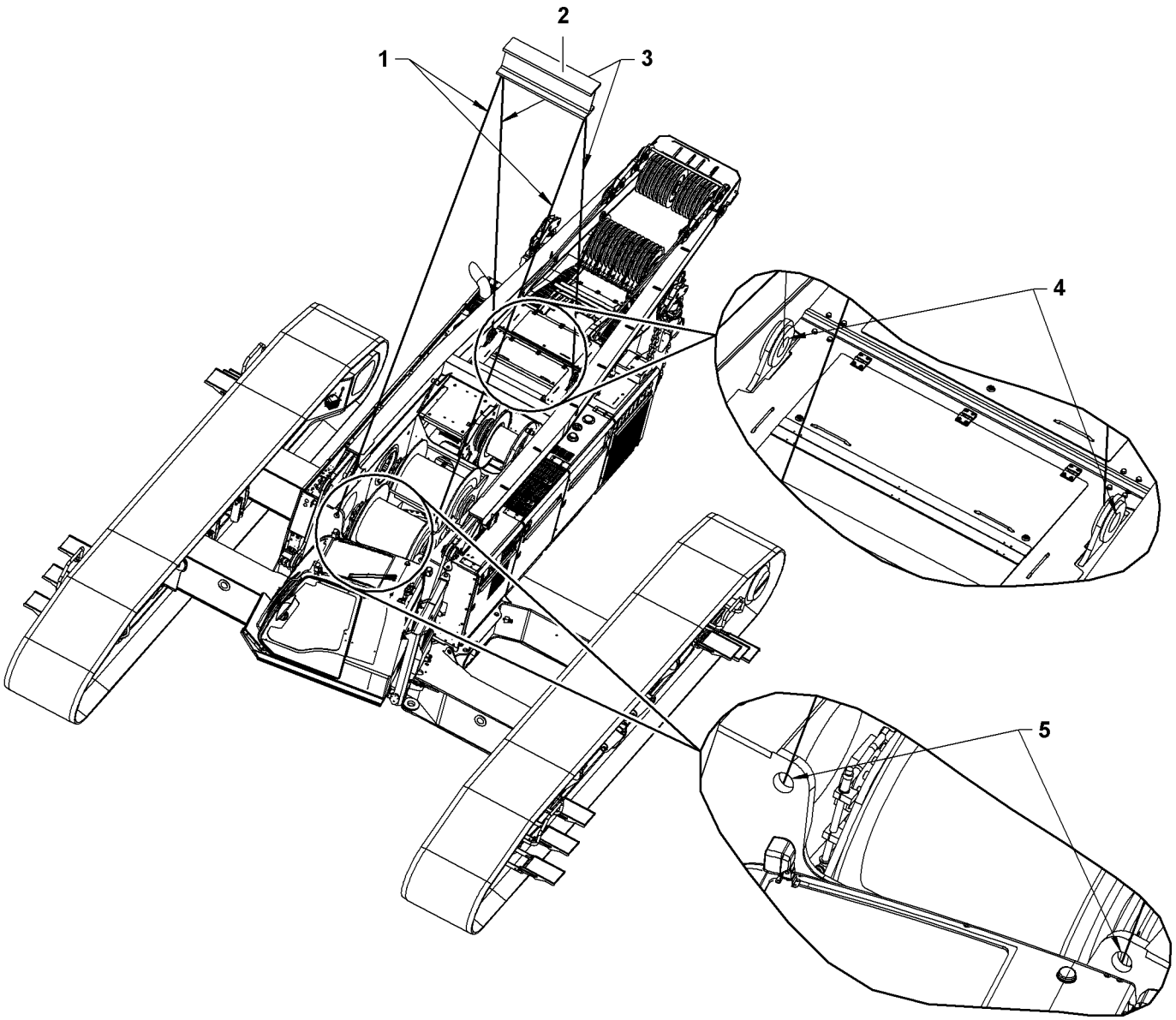

Fig. 5682: Loading basic machine with crawler side frame - rigging points

1	Front round slings	**3**	Rear round slings	**5**	Front rigging points
2	Crossbar	**4**	Rear rigging points		

- ▶ Lash front round slings **1** to the rigging points **5** using shackles.
- ▶ Lash rear round slings **3** to the rigging points **4** using shackles.
- ▶ Carefully lift and load basic machine.

Loading basic machine with crawler side frame and carbody counterweight

DANGER
Improper loading of machine!
Toppling of machine, damage to machine.

- ▶ Only use sling gear and crossbars that meet the minimum requirements (see: tab. 579, page 1762) .

LWN/LR.x/V03.01//Auslieferung/2015-06-03/en

copyright by
LIEBHERR

Make sure the following prerequisites are met:
- ❑ The rear counterweight is removed from the basic machine.
- ❑ Main boom base section is detached from basic machine.
- ❑ Cabin is lowered, swung into transport position and secured.
- ❑ Counterweight hoisting cylinders are retracted.
- ❑ Tilting-back supports are retracted.
- ❑ A-frame1 is folded back in transport position and A-frame1 cylinders are retracted.
- ❑ Jacks on the undercarriage are pinned in transport position and retracted.
- ❑ Additional floodlights* (if available) are uninstalled.
- ❑ All loose parts are secured to prevent slippage and falling.
- ❑ A crossbar with a suitable load-bearing capacity is available.
- ❑ Sling gear is in good condition and approved for use.

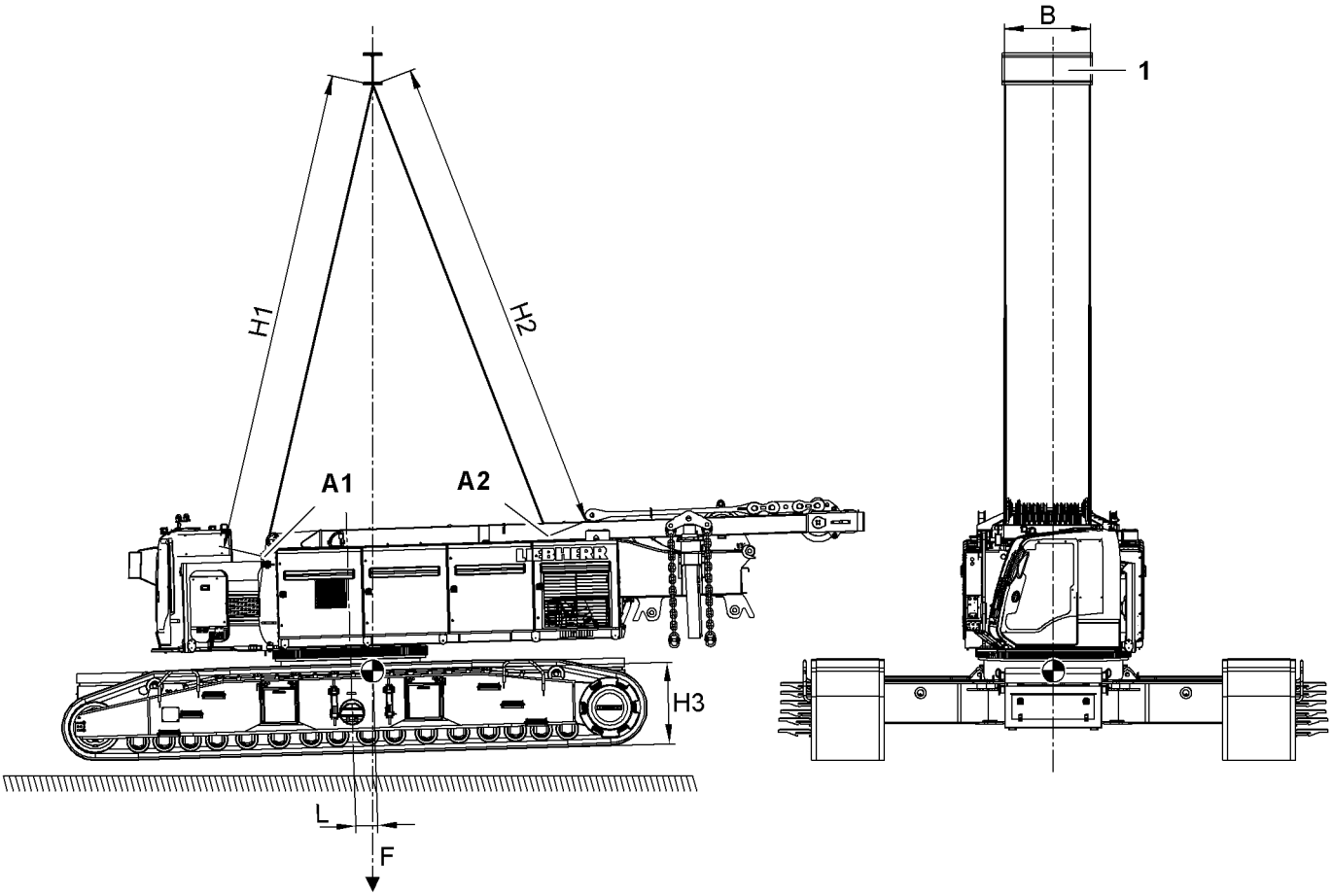

Fig. 5683: Loading basic machine with crawler side frame and carbody counterweight - overview

1 Crossbar

The mass and center of gravity may deviate from the values shown below depending on the as-delivered configuration, levels in the tanks, and generally accepted tolerances.

Name		Value
H1	Length front round slings	min. 8000 mm (26‘ 3“ ft-in)
	Load-bearing capacity front round slings	min. 80000 kg (176,367 lb)
H2	Length rear round slings	min. 8000 mm (26‘ 3“ ft-in)
	Load-bearing capacity rear round slings	min. 50000 kg (110,230 lb)

LWN/LR.x/V03.01//Auslieferung/2015-06-03/en

copyright by
LIEBHERR

Name		Value
A1	Load-bearing capacity front shackles	min. 85000 kg (187,390 lb)
A2	Load-bearing capacity rear shackles	min. 55000 kg (121,252 lb)
B	Distance rigging points on crossbar	1340 mm (4‘ 5“ ft-in) to 1500 mm (4‘ 11“ ft-in)
H3	Distance from center of gravity to bottom edge of crawler side frame	1349 mm 4‘ 5“ ft-in
L	Distance from center of gravity to rotation axis	359 mm 1‘ 2“ ft-in
F	Transport weight	143500 kg 316,359 lb

Tab. 579: Technical data for loading basic machine with crawler side frame and carbody counterweight

LWN/LR.x/V03.01//Auslieferung/2015-06-03/en

copyright by
LIEBHERR

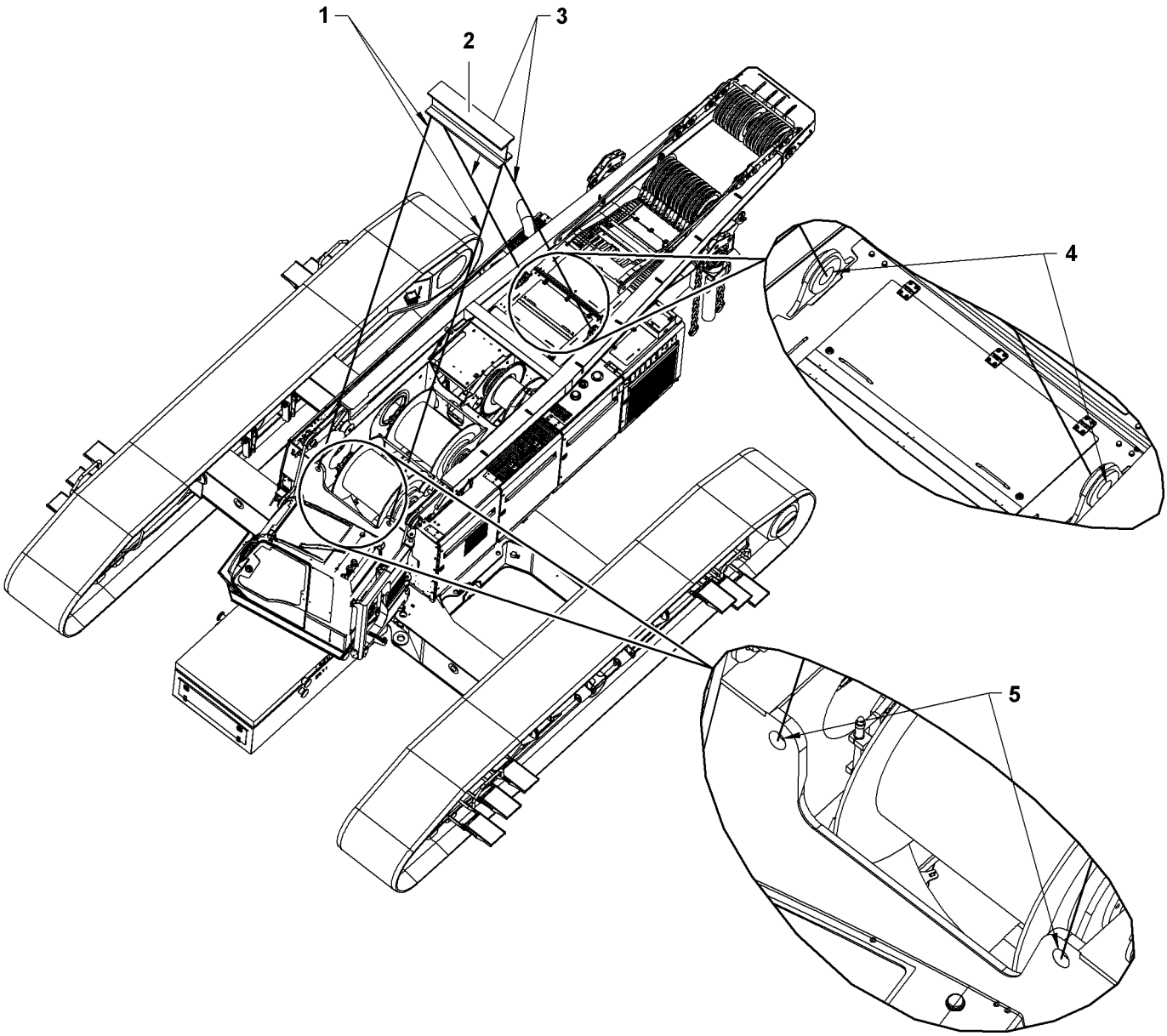

Fig. 5684: Loading basic machine with crawler side frame and carbody counterweight - rigging points

1	Front round slings	**3**	Rear round slings	**5**	Front rigging points
2	Crossbar	**4**	Rear rigging points		

- ▶ Lash front round slings **1** to the rigging points **5** using shackles.
- ▶ Lash rear round slings **3** to the rigging points **4** using shackles.
- ▶ Carefully lift and load basic machine.

Loading basic machine with crawler side frame, carbody counterweight and rear counterweight

DANGER
Improper loading of machine!
Toppling of machine, damage to machine.

- ▶ Only use sling gear and crossbars that meet the minimum requirements (see: tab. 580, page 1765) .

LWN/LR.x/V03.01//Auslieferung/2015-06-03/en

copyright by
LIEBHERR

Make sure the following prerequisites are met:

- ❑ Main boom base section is detached from basic machine.
- ❑ Cabin is lowered, swung into transport position and secured.
- ❑ Counterweight hoisting cylinders are retracted.
- ❑ Tilting-back supports are retracted.
- ❑ A-frame1 is folded back in transport position and A-frame1 cylinders are retracted.
- ❑ Jacks on the undercarriage are pinned in transport position and retracted.
- ❑ Additional floodlights* (if available) are uninstalled.
- ❑ All loose parts are secured to prevent slippage and falling.
- ❑ A crossbar with a suitable load-bearing capacity is available.
- ❑ Sling gear is in good condition and approved for use.

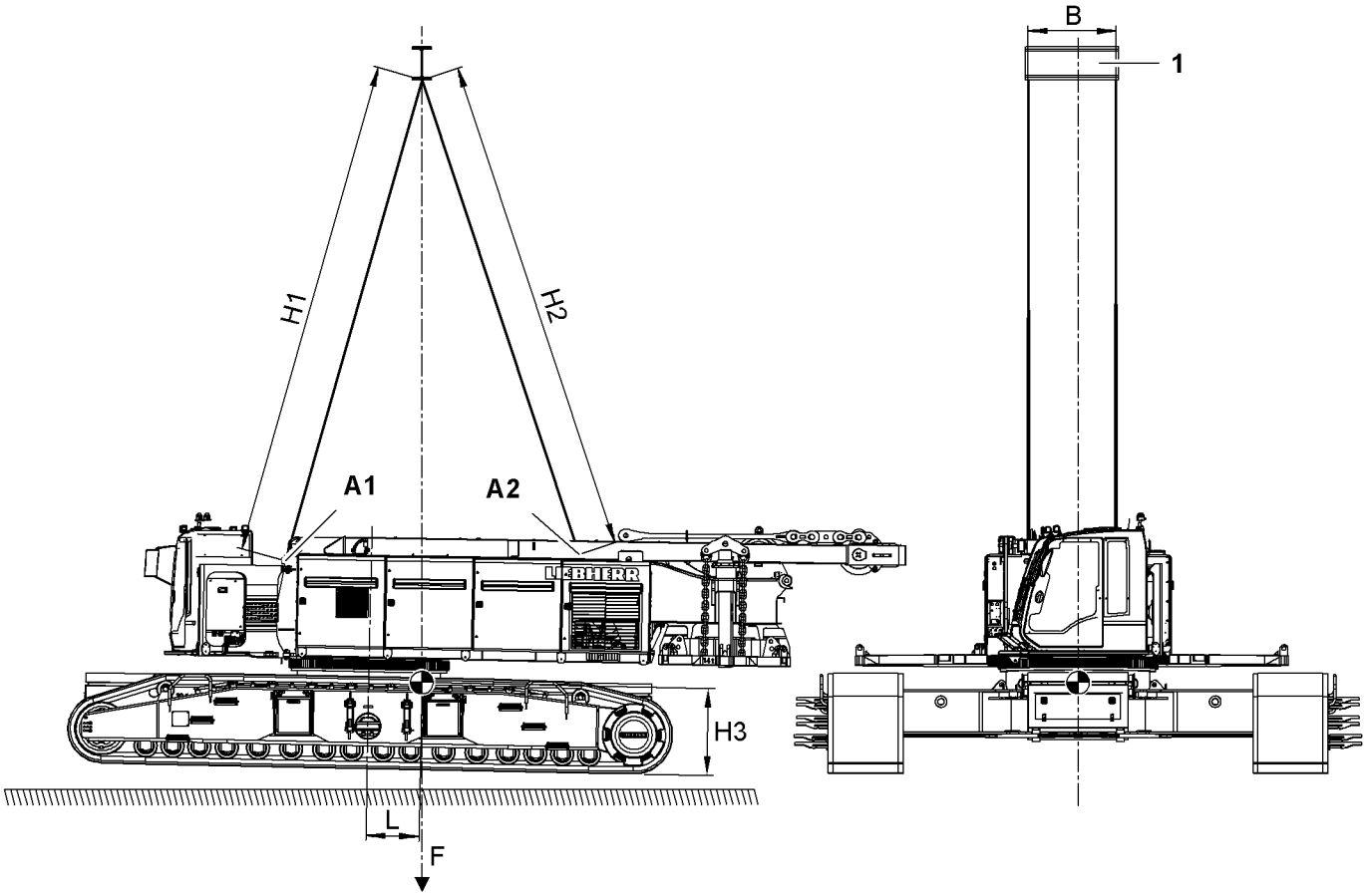

Fig. 5685: Loading basic machine with crawler side frame, carbody counterweight and rear counterweight - overview

1 Crossbar

The mass and center of gravity may deviate from the values shown below depending on the as-delivered configuration, levels in the tanks, and generally accepted tolerances.

Name		Value
H1	Length front round slings	min. 8000 mm (26‘ 3“ ft-in)
	Load-bearing capacity front round slings	min. 80000 kg (176,367 lb)
H2	Length rear round slings	min. 8000 mm (26‘ 3“ ft-in)
	Load-bearing capacity rear round slings	min. 60000 kg (132,275 lb)

LWN/LR.x/V03.01//Auslieferung/2015-06-03/en

copyright by LIEBHERR

Name		Value
A1	Load-bearing capacity front shackles	min. 85000 kg (187,390 lb)
A2	Load-bearing capacity rear shackles	min. 55000 kg (121,252 lb)
B	Distance rigging points on crossbar	1340 mm (4‘ 5“ ft-in) to 1500 mm (4‘ 11“ ft-in)
H3	Distance from center of gravity to bottom edge of crawler side frame	1395 mm 4‘ 7“ ft-in
L	Distance from center of gravity to rotation axis	850 mm 2‘ 9“ ft-in
F	Transport weight	158000 kg 348,325 lb

Tab. 580: Technical data for loading basic machine with crawler side frame, carbody counterweight and rear counterweight

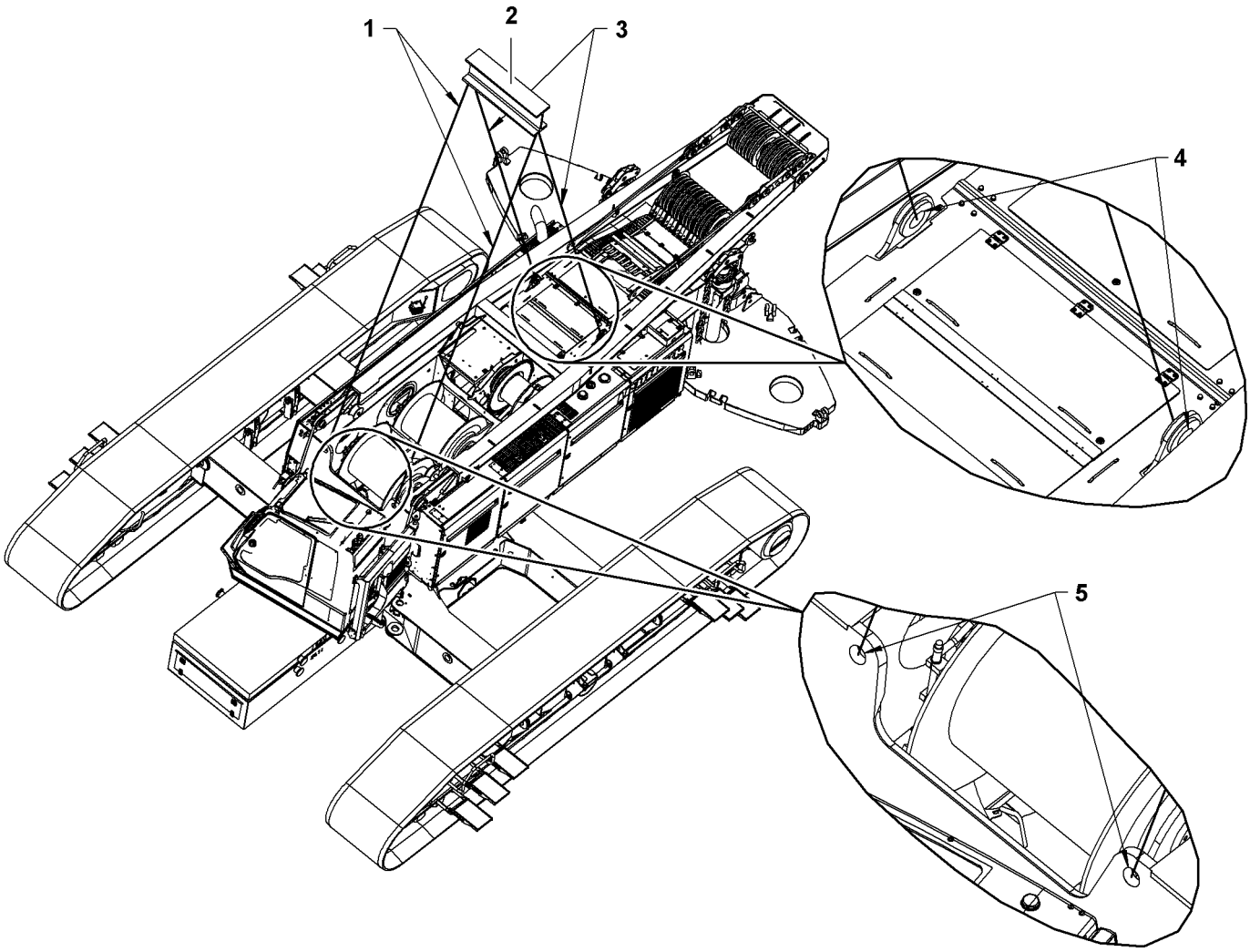

LWN/LR.x/V03.01//Auslieferung/2015-06-03/en

Fig. 5686: Loading basic machine with crawler side frame, carbody counterweight and rear counterweight - rigging points

1 Front round slings
2 Crossbar
3 Rear round slings
4 Rear rigging points
5 Front rigging points

▶ Lash front round slings **1** to the rigging points **5** using shackles.

copyright by LIEBHERR

- ▶ Lash rear round slings **3** to the rigging points **4** using shackles.
- ▶ Carefully lift and load basic machine.

LWN/LR.x/V03.01//Auslieferung/2015-06-03/en

copyright by
LIEBHERR

8.2 Transporting the basic machine with a transport vehicle

Note

▶ Always observe national traffic regulations and local bylaws.

Ensure that the following conditions are fulfilled:
- ❑ Crawler side frame, carbody counterweight and rear counterweight are detached from the basic machine.
- ❑ Main boom base section is detached from basic machine.
- ❑ Cabin is lowered, swung into transport position and secured.
- ❑ Counterweight hoisting cylinders are retracted.
- ❑ Tilting-back supports are retracted.
- ❑ A-frame1 is folded back in transport position and A-frame1 cylinders are retracted.
- ❑ Jacks on the undercarriage are pinned in transport position and retracted.
- ❑ Additional floodlights* (if available) are deinstalled.

8.2.1 Transporting basic machine with undercarriage with fixed track width with a transport vehicle

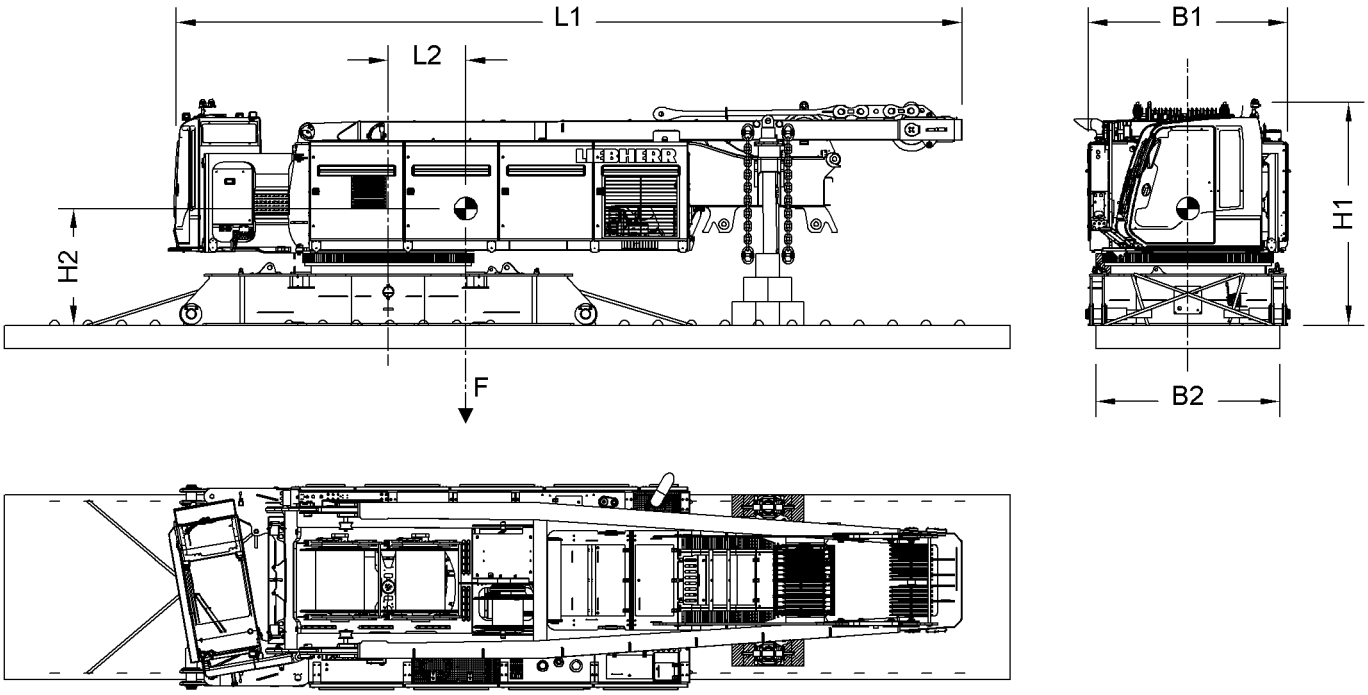

Fig. 5687: Dimensions transporting basic machine with undercarriage with fixed track width with a transport vehicle

DANGER
Machine not transported correctly!
Machine toppling over.

▶ Only use transport vehicle with minimum width **B2** (see: tab. 581, page 1769) .

LWN/LR.x/V03.01//Auslieferung/2015-06-03/en

The mass and center of gravity may deviate from the values shown below depending on the as-delivered configuration, the liquid level in the tanks, and generally accepted tolerances.

Name		Value
L1	Length basic machine	11850 mm 38‘ 11“ ft-in
L2	Distance from center of gravity to rotation axis	1153 mm 3‘ 9“ ft-in
B1	Width basic machine	2990 mm 9‘ 10“ ft-in
B2	Width transport vehicle	min. 1578 mm (5‘ 2“ ft-in)
H1	Height basic machine	3400 mm 11‘ 2“ ft-in
H2	Distance center of gravity to bottom edge of center part	1741 mm 5‘ 9“ ft-in
F	Transport weight	48000 kg 105,820 lb

Tab. 581: Technical data transporting basic machine with undercarriage with fixed track width with a transport vehicle

DANGER
None or wrong anti-slide mats on transport vehicle!
Basic machine slides out of position on transport vehicle.

▶ Never use anti-slide mats with a friction coefficient below 0.6.

▶ Lay out anti-slide mats on the transport vehicle.

▶ Loading basic machine onto transport vehicle (For more information see: 8.1.1 Loading basic machine with undercarriage with fixed track width, page 1743) .

LWN/LR.x/V03.01//Auslieferung/2015-06-03/en

copyright by
LIEBHERR

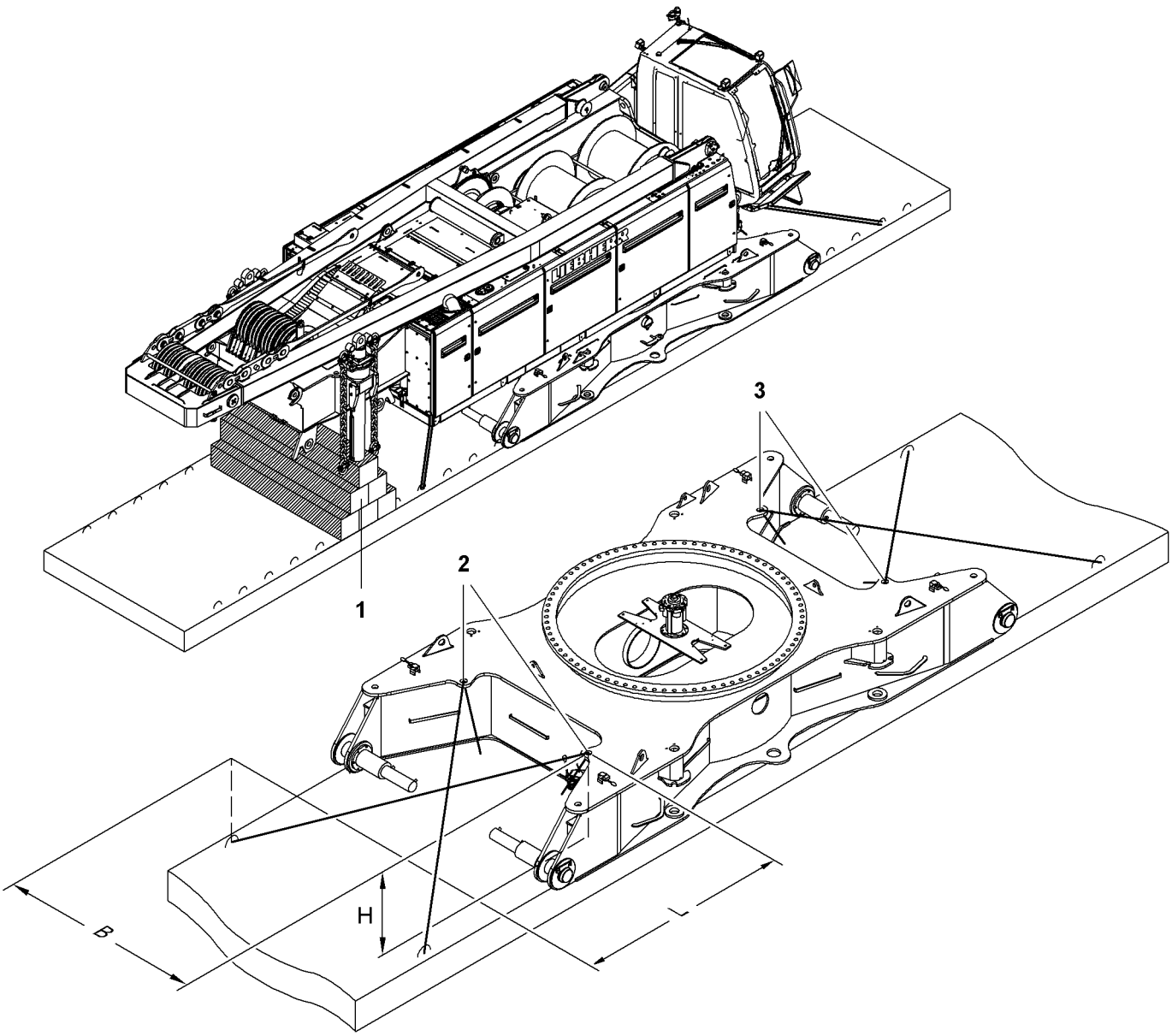

Fig. 5688: Lashing points transporting basic machine with undercarriage with fixed track width with a transport vehicle

1	Wooden blocks	**3**	Front lashing points	**B**	Lateral distance between lashing points
2	Rear lashing points	**L**	Longitudinal distance between lashing points	**H**	Lashing point height

- ▶ Underlay both counterweight hoisting cylinders with wooden blocks **1**.
- ▶ Lock the operator's cab and all side doors on the uppercarriage.

LWN/LR.x/V03.01//Auslieferung/2015-06-03/en

copyright by
LIEBHERR

DANGER
Incorrect lashing of machine on the transport vehicle!
Machine toppling over.

- ▶ Ensure that the lashing capacity (LC) of the chain is at least 200 kN (44,960 lb_f) (2 x 100 kN (22,480 lb_f)).
- ▶ Make sure that chain length is at least the same as the height of the lashing point **H**.
- ▶ Longitudinal distance between lashing points **L** must be at least 0.268 x lateral distances between lashing points **B**.

- ▶ Use the front **3** and rear lashing points **2** to lash the basic machine in a cross pattern on the transport vehicle.

DANGER
Turning of uppercarriage during transportation!
Machine toppling over.

- ▶ Secure uppercarriage to prevent it from distortion.

- ▶ Use the uppercarriage locking device to prevent the uppercarriage from turning.
- ▶ The lashing should be checked continuously throughout the entire transportation process; retighten as necessary.

8.2.2 Transporting basic machine with undercarriage* with adjustable track width with a transport vehicle

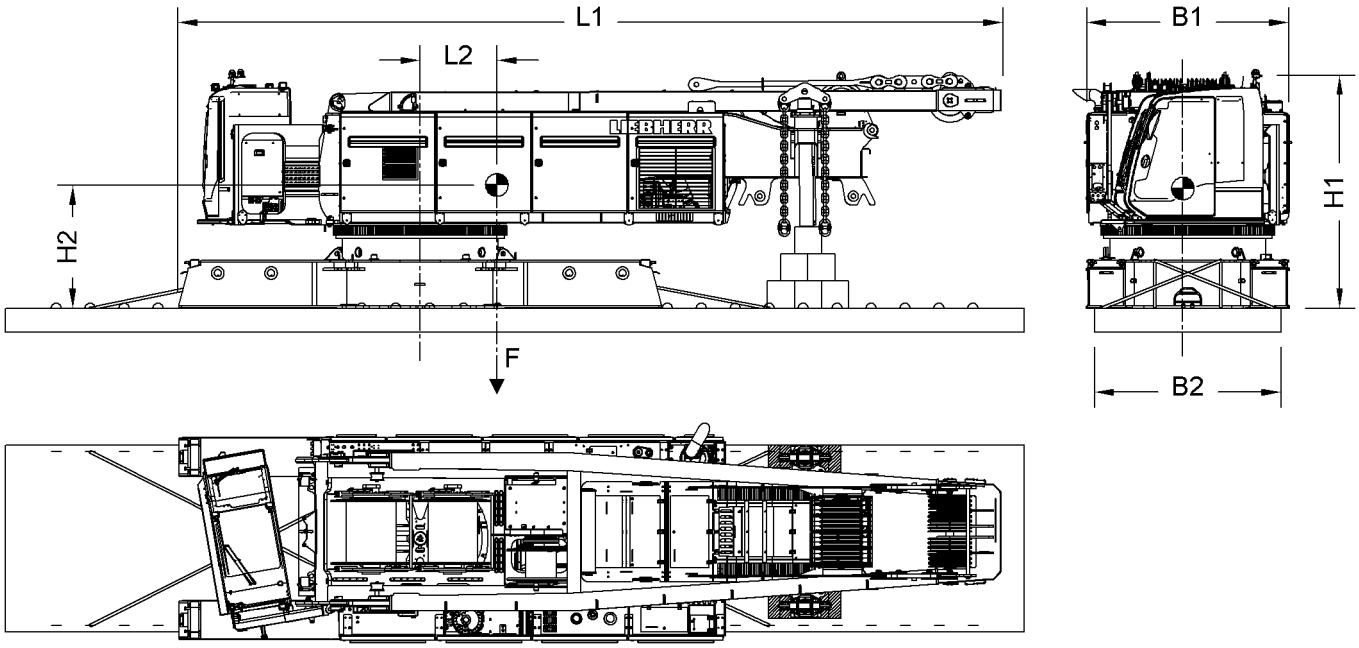

Fig. 5689: Dimensions transporting basic machine with undercarriage with adjustable track width with a transport vehicle*

LWN/LR.x/V03.01//Auslieferung/2015-06-03/en

copyright by
LIEBHERR

DANGER
Improper transport of machine!
Toppling of machine.

▶ Only use transport vehicle with minimum width **B2** (see: tab. 582, page 1772) .

The mass and center of gravity may deviate from the values shown below depending on the as-delivered configuration, levels in the tanks, and generally accepted tolerances.

Name		Value
L1	Length basic machine	12300 mm 40‘ 4“ ft-in
L2	Distance from center of gravity to rotation axis	1129 mm 3‘ 8“ ft-in
B1	Width basic machine	3000 mm 9‘ 10“ ft-in
B2	Width transport vehicle	min. 1714 mm (5‘ 7“ ft-in)
H1	Height basic machine	3500 mm 11‘ 6“ ft-in
H2	Distance center of gravity to bottom edge of center part	1814 mm 5‘ 11“ ft-in
F	Transport weight	46000 kg 101,411 lb

Tab. 582: Technical data transporting basic machine with undercarriage with adjustable track width with a transport vehicle*

DANGER
None or wrong anti-slide mats on transport vehicle!
Basic machine slides out of position on transport vehicle.

▶ Never use anti-slide mats with a friction coefficient below 0.6.

▶ Lay out anti-slide mats on the transport vehicle.

▶ Load basic machine onto transport vehicle (For more information see: 8.1.2 Loading basic machine with undercarriage with adjustable track width, page 1756) .

LWN/LR.x/V03.01//Auslieferung/2015-06-03/en

copyright by
LIEBHERR

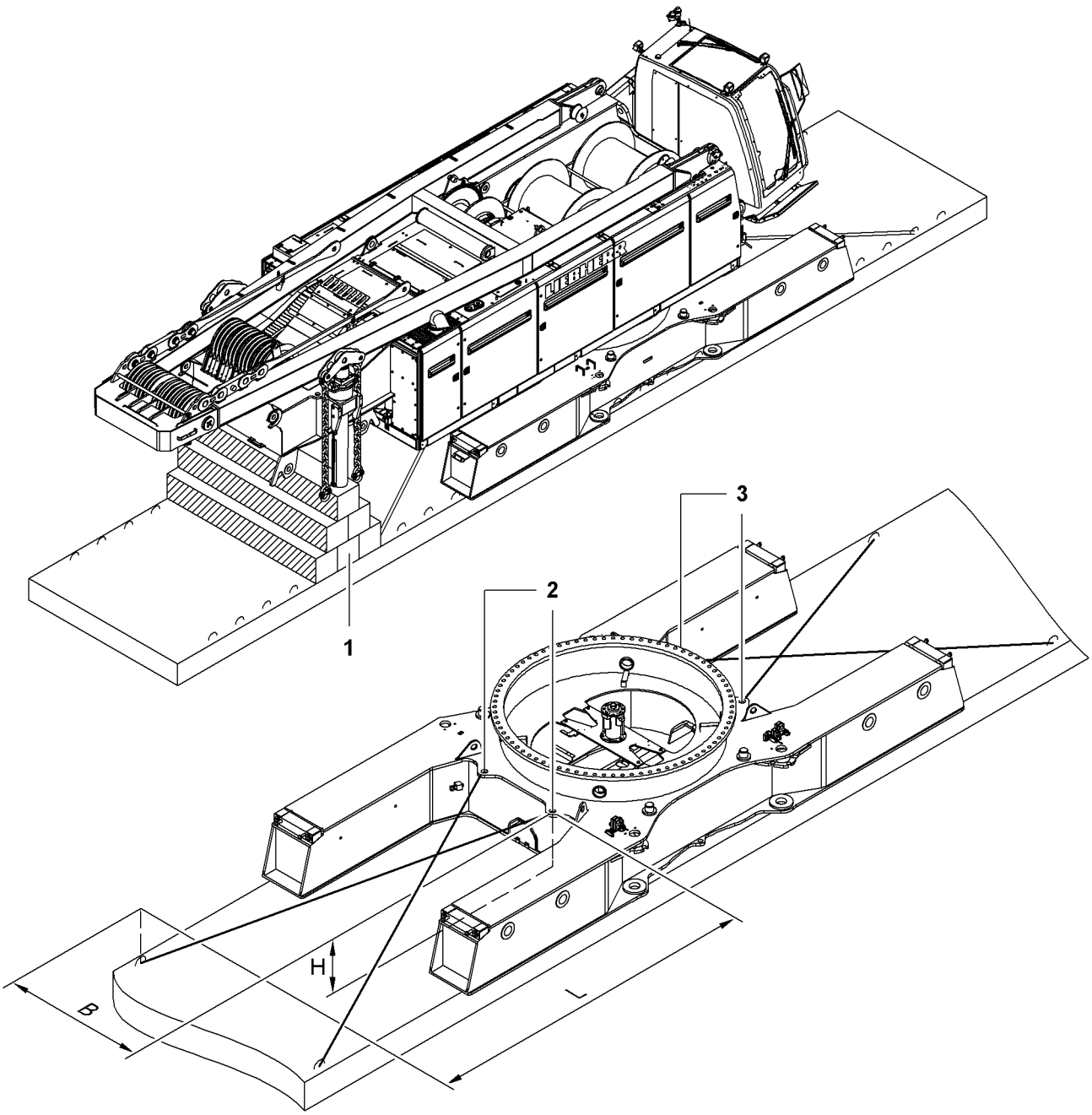

Fig. 5690: Lashing points transporting basic machine with undercarriage with adjustable track width with a transport vehicle*

1	Wooden blocks	**3**	Front lashing points	**B**	Lateral distance between lashing points
2	Rear lashing points	**L**	Longitudinal distance between lashing points	**H**	Lashing point height

- ▶ Underlay both counterweight hoisting cylinders with wooden blocks **1**.
- ▶ Lock the cabin and all side doors on the uppercarriage.

LWN/LR.x/V03.01//Auslieferung/2015-06-03/en

copyright by
LIEBHERR

DANGER
Incorrect lashing of machine on the transport vehicle!
Toppling of machine.

- ▶ Ensure that the lashing capacity (LC) of the chain is at least 200 kN (44,960 lb_f) (2 x 100 kN (22,480 lb_f)).
- ▶ Ensure that chain length is at least the same as the height of the lashing point **H**.
- ▶ Longitudinal distance between lashing points **L** must be at least 0.287 x lateral distance between lashing points **B**.

- ▶ Use the front **3** and rear lashing points **2** to lash the basic machine in a cross pattern on the transport vehicle.

DANGER
Turning of uppercarriage during transportation!
Toppling of machine.

- ▶ Secure uppercarriage to prevent twisting.

- ▶ Use the uppercarriage lock to prevent twisting of uppercarriage.
- ▶ Lashing should be checked continuously throughout the entire transport process; retighten as necessary.

LWN/LR.x/V03.01//Auslieferung/2015-06-03/en

copyright by
LIEBHERR

8.3 Transporting the boom sections

NOTICE
Floodlights left on the boom sections contrary to instructions!
Floodlights damaged.

▶ Remove the floodlights (if fitted).

The floodlight traverse may remain on the jib head during transport.

8.3.1 Adjusting and mounting the transport brackets for steel pendant straps

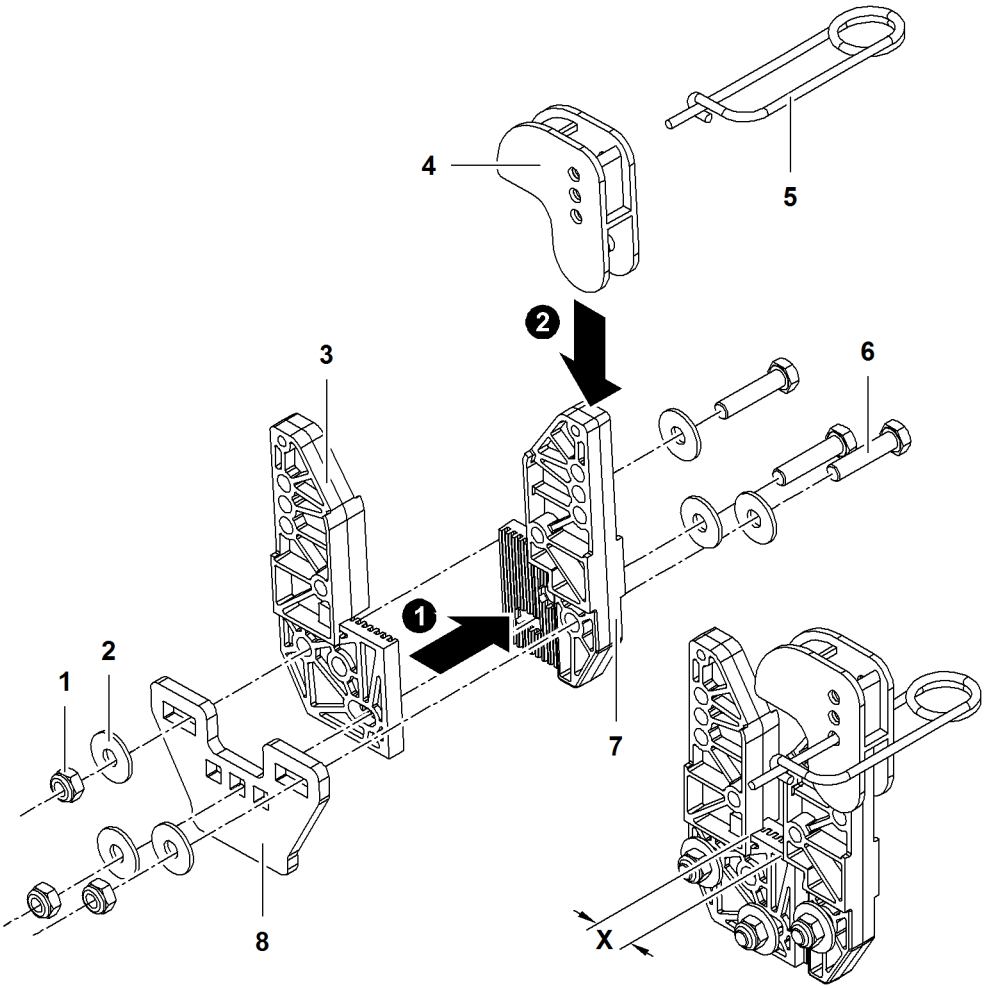

Fig. 5691: Adjusting and mounting the transport brackets for steel pendant straps

1	Nut (3x)	**6**	Screw (3x)
2	Washer (6x)	**7**	Element of transport bracket
3	Element of transport bracket	**8**	Fitting sheet
4	Securing element	**X**	Required width for steel pendant straps
5	Locking spring		

▶ Set required width **X**.

LWN/LR.x/V03.01//Auslieferung/2015-06-03/en

copyright by
LIEBHERR

- ▶ Insert element **3** at element **7**.
- ▶ Position washers **2** on screws **6**.
- ▶ Insert screws **6** in transport bracket and fitting sheet **8**.
- ▶ Secure screws **6** with washers **2** and nuts **1**.
- ▶ Place securing element **4** onto transport bracket.
- ▶ Secure securing element **4** with locking spring **5**.

8.3.2 Installing transport brackets for CF pendant straps

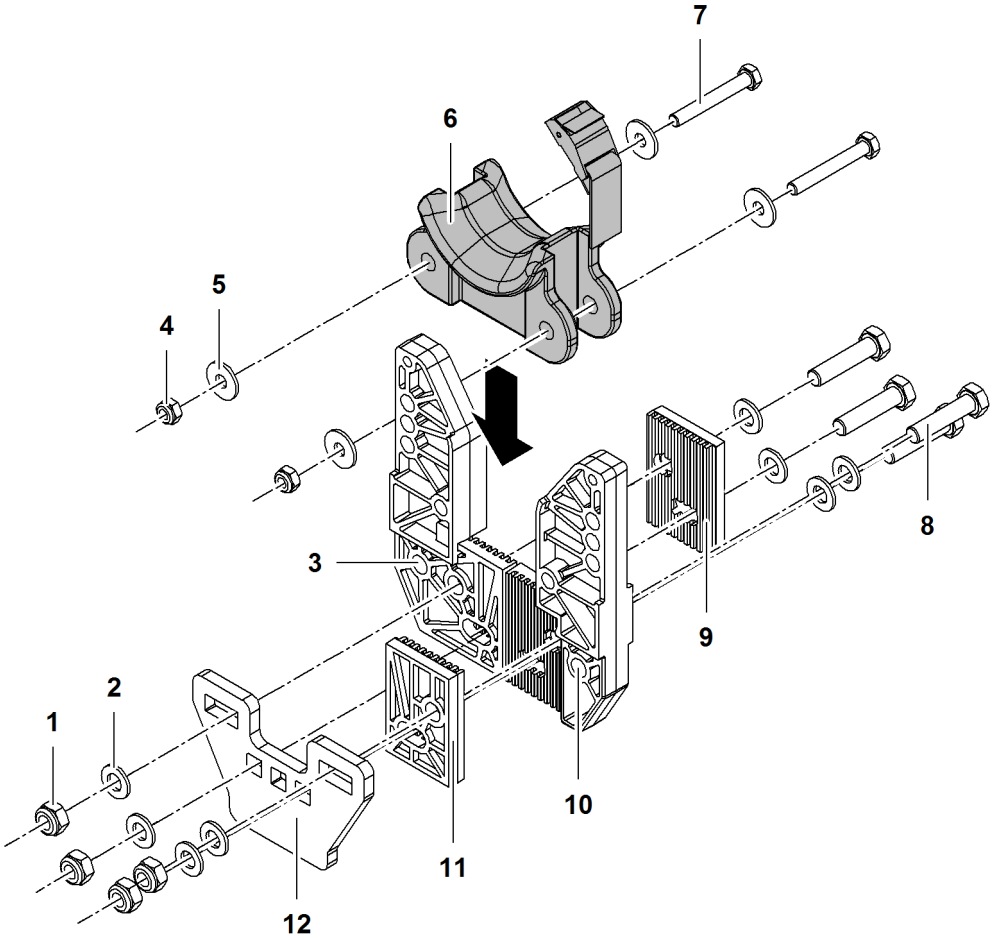

Fig. 5692: Installing transport brackets for CF pendant straps

1	Nut (4x)	**7**	Screw (2x)
2	Washer (8x)	**8**	Screw (4x)
3	Element of transport bracket	**9**	Element of transport bracket
4	Nut (2x)	**10**	Element of transport bracket
5	Washer (4x)	**11**	Element of transport bracket
6	Extension element for CF pendant straps	**12**	Fitting sheet

- ▶ Insert element **11** at element **10**.
- ▶ Insert element **9** at element **3**.
- ▶ Position washers **2** on screws **8**.
- ▶ Insert screws **8** in transport bracket and fitting sheet **12**.

LWN/LR.x/V03.01//Auslieferung/2015-06-03/en

- ▶ Secure screws **8** with washers **2** and nuts **1**.
- ▶ Insert extension element **6** in transport bracket.
- ▶ Position washers **5** on screws **7**.
- ▶ Insert screws **7** in transport bracket and extension element **6**.
- ▶ Secure screws **7** with washers **5** and nuts **4**.

8.3.3 Adjusting and mounting transport brackets for connecting links

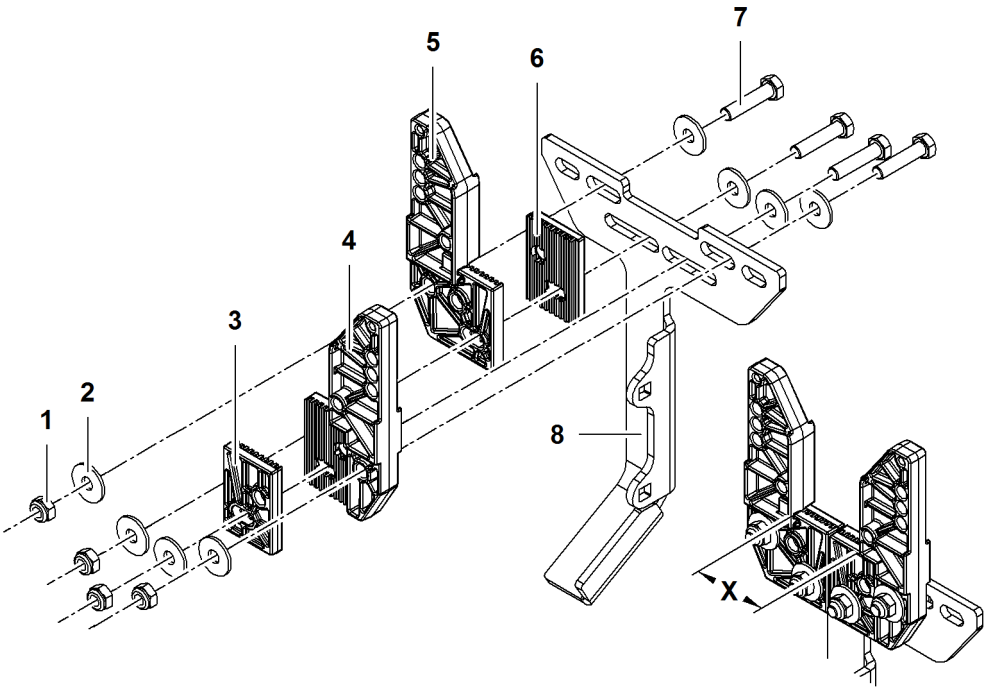

Fig. 5693: Adjusting and mounting transport brackets for connecting links

1	Nut (4x)	**6**	Element of transport bracket
2	Washer (8x)	**7**	Screw (4x)
3	Element of transport bracket	**8**	Fitting sheet
4	Element of transport bracket	**X**	Required width for connecting links
5	Element of transport bracket		

- ▶ Set required width **X**.
- ▶ Insert element **3** at element **4**.
- ▶ Insert element **6** at element **5**.
- ▶ Position washers **2** on screws **7**.
- ▶ Insert screws **7** in transport bracket and fitting sheet **8**.
- ▶ Secure screws **7** with washers **2** and nuts **1**.

LWN/LR.x/V03.01//Auslieferung/2015-06-03/en

copyright by
LIEBHERR

8.3.4 Insert pendant straps in transport bracket and secure

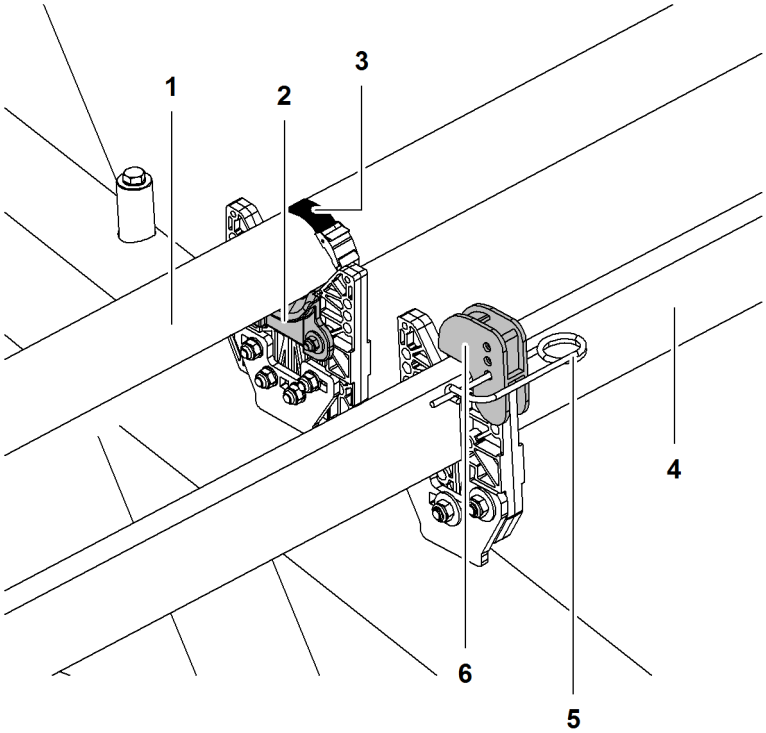

Fig. 5694: Inserting and securing pendant straps in transport bracket

1	CF pendant strap	**4**	Steel pendant strap
2	Extension element for CF pendant straps	**5**	Locking spring
3	Belt	**6**	Securing element

- ▶ Place steel pendant straps into transport brackets for steel pendant straps.
- ▶ Place securing element **6** onto transport bracket.
- ▶ Secure securing element **6** with locking spring **5**.
- ▶ Place CF pendant straps into transport brackets for CF pendant straps.
- ▶ Place belt **3** around CF pendant strap **1**.
- ▶ Tighten belt **3**.
- ▶ Repeat procedure with all main boom sections and jib sections.

LWN/LR.x/V03.01//Auslieferung/2015-06-03/en

copyright by
LIEBHERR

8.3.5 Securing the pendant straps with transport bracket

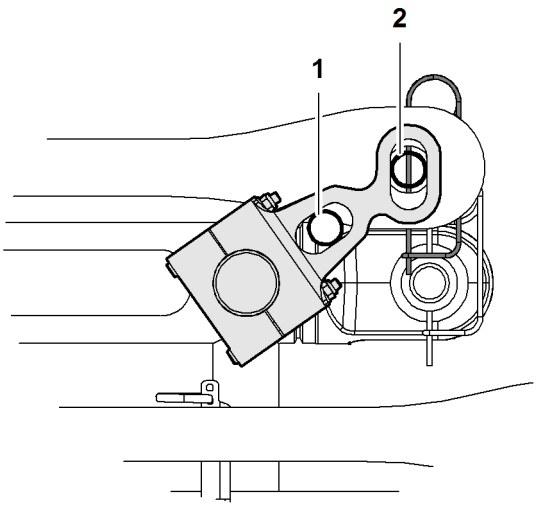

Fig. 5695: Securing the pendant straps with transport bracket

1	Working position transport bracket	**2**	Transport position transport bracket

In crane mode, the transport bracket is located in working position **1**.

▶ Take transport bracket out of working position **1**.

▶ Repeat procedure with all main boom sections and jib sections.

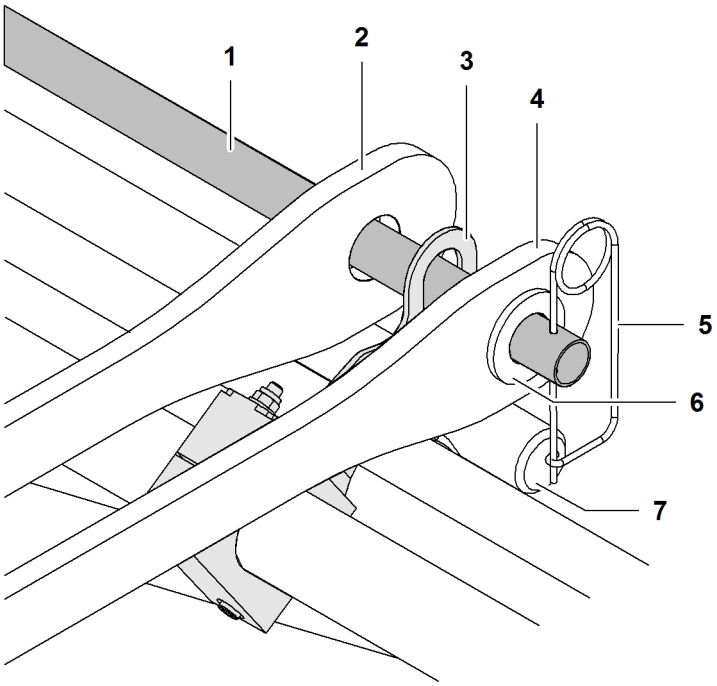

Fig. 5696: Securing the pendant straps with transport bracket

1	Transport bracket	**5**	Locking spring
2	Main boom pendant strap	**6**	Washer
3	Bracket	**7**	Rope protection pipe
4	Jib backstay strap		

▶ Slide transport bracket **1** through main boom pendant strap **2**, jib backstay strap **4** and bracket **3**.

LWN/LR.x/V03.01//Auslieferung/2015-06-03/en

copyright by
LIEBHERR

- ▶ Secure transport bracket **1** with washer **6** and locking spring **5**.
- ▶ Repeat procedure with all main boom sections and jib sections.
- ▶ Ensure that all loose parts are secured.

8.3.6 Preparing boom components for transport

For space-saving transport, jib sections of the same length can be pushed into main boom sections. The jib sections are pushed laterally reversed into the main boom sections.

Ensure that the following conditions are fulfilled:
- ❑ Double-taper pin is in the transport brackets.
- ❑ Locking elements are stored.
- ❑ Pins for pendant straps are secured.
- ❑ All loose parts secured.

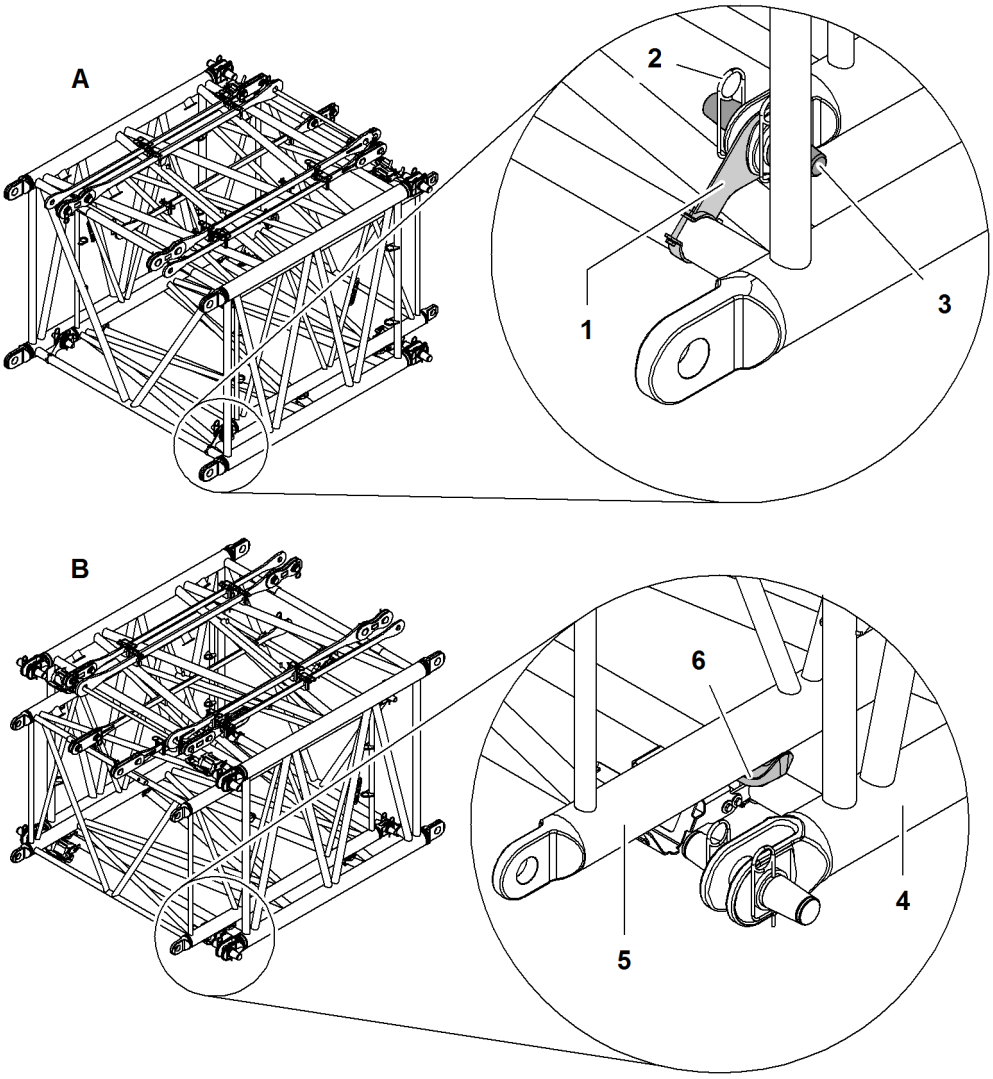

Fig. 5697: Preparing boom components for transport

1	Bracket (2x)	**5**	Jib section
2	Locking spring (2x)	**6**	Support (4x) for retracted jib section during transport
3	Double-taper pin (2x)	**A**	Rear view
4	Main boom section	**B**	Front view

LWN/LR.x/V03.01//Auslieferung/2015-06-03/en

copyright by LIEBHERR

Jib system dimension	Distance between supports
2316	2440 mm 8‘ ft-in
1916	2063 mm 6‘ 9“ ft-in
1713	1863 mm 6‘ 1“ ft-in
1309	1440 mm 4‘ 9“ ft-in
1008	1140 mm 3‘ 9“ ft-in

Tab. 583: Distance between supports

- ▶ If necessary, adjust support **6** for jib section.
- ▶ Lift jib section **5** in main boom section **4** onto support **6**.
- ▶ Slide jib section **5** in until it is possible to pin the double-taper pin **3**.
- ▶ Bolt jib section **5** with bracket **1**.
- ▶ Secure pin with locking spring **2** and washers.
  - ▷ Boom components ready for transport:

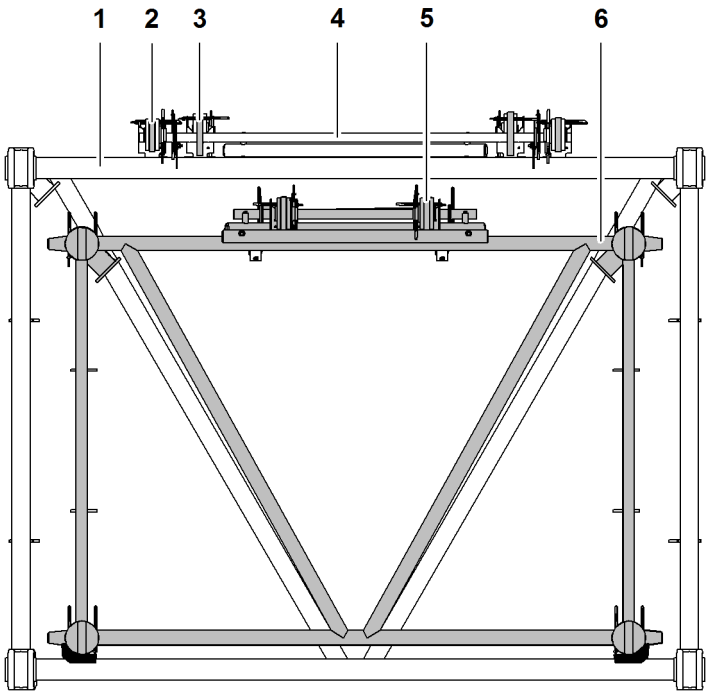

Fig. 5698: Boom components ready for transport

1	Main boom section	**4**	Transport bracket
2	Jib backstay strap (2x)	**5**	Jib pendant strap (2x)
3	Main boom pendant strap (2x)	**6**	Jib section

- ▶ Transport boom sections.

LWN/LR.x/V03.01//Auslieferung/2015-06-03/en

copyright by
LIEBHERR

8.3.7 Transporting the pendant straps

Note
Liebherr recommends:

▶ Transport pendant straps on boom sections.

Handle pendant straps with care.

NOTICE
Pendant straps not transported correctly!
Damage to pendant straps.

If pendant straps are not transported on boom sections:
▶ Pack up pendant straps.

▶ Store pendant straps on a soft base (e.g. wood).

▶ Transport pendant straps.

LWN/LR.x/V03.01//Auslieferung/2015-06-03/en

copyright by
LIEBHERR

9 Maintenance

9 Maintenance

The chapter **Maintenance** deals with the following subjects:
– Maintenance and inspection of the machine
– Lubricants and consumables

9.1 Maintenance and inspection schedule

NOTICE
Improperly performed maintenance and inspection work!
Damage to machine.

▶ Observe the prescribed maintenance and inspection intervals according to the maintenance plan.

▶ Perform all maintenance and inspection work according to specifications.

▶ Observe references to manufacturer's documentation and the regulations and guidelines contained therein.

This chapter contains all maintenance work to be performed on the machine in table form.

The maintenance and inspection intervals are specified in operating hours and calendar times, whereby the first reached interval date is decisive. The intervals are complementary. This means that if intervals with a higher number of hours/ calendar time are performed, the activities with a lower number of hours/calendar time also have to be performed.

Some maintenance work make reference to the manufacturer's documentation and must be performed in accordance with the regulations and directives of the respective manufacturer's documentation. In case of maintenance intervals and inspection intervals that diverge from the manufacturer's documentation and operation manual of the machine, however, the intervals stated in the machine's operation manual take precedence.

The maintenance work must be carried out conscientiously. The maintenance intervals must not be exceeded, but can be shortened if necessary. Shortening of intervals largely depends on the operating conditions.

The maintenance intervals must be reduced in case of the following operating conditions:
– High temperature differences on site
– Generally high temperatures
– Aggressive environment (e.g. chemical plant)
– Dirty, dusty environment (e.g. dust formation when unloading bulk goods)
– High strains during operation

Maintenance personnel

LWN/LR.x/V03.01//Auslieferung/2015-06-03/en

copyright by LIEBHERR

Trained personnel with the appropriate qualifications (machine operators) with specialist knowledge and experience required to carry out the respective maintenance work.

Authorized service personnel

Specially trained personnel with extensive detailed knowledge of components or systems and were trained by Liebherr to perform this work. Mainly the Liebherr service personnel that was directly trained and authorized by the manufacturer or one of its service points.

LWN/LR.x/V03.01//Auslieferung/2015-06-03/en

copyright by
LIEBHERR

Customer:.....Machine type:..... Serial no.:..... Operating hours:.....Date:.....

Maintenance / inspection after service hours								Tasks to be performed	
8h/Daily	40h/Weekly	500h/Quarterly	1000h/Every six months	2000h/Annually	4000h/2 years	6000h/3 years	Special intervals	**By maintenance staff** ■ Once-only activity ● Repeat interval ✦ If necessary ❄ Annually before the winter **By authorised specialist staff** ☐ Once-only activity ❍ Repeat interval ✧ If necessary	See page
Whole machine									
				❍				Checking the machine	
							✧	Visual inspection and function test of the entire machine after an exceptional situation (e.g. emergency stop, overload, collision, etc.)	
Diesel engine (see operation manual of the engine manufacturer on CD)									
●								Checking the engine oil level (or according to oil level sensor in cabin)	
●								Visual inspection (no leaks, dirt or damage)	
							❍	Changing the diesel engine oil (at 1500h or at least every 2 years): valid for oil quality E4. Other oil qualities and aggravating factors: see lubricants and consumables	
							❍	Exchanging the oil filter insert (after 1500h or at least every 2 years)	
							❍	Exchanging oil separator filter insert after 1500h	
		❍						Check condition of belt drive, replace if necessary	
		☐	❍					Check intake and exhaust system for condition, attachment and leaks	
			❍					Check that oil sump, engine bearing and diesel engine brackets are securely fit	
							❄	Check the heating flange at the start of the cold season	
							❍	Change heating flange every 10,000h	
							❍	Checking/adjusting the valve clearance every 1500h	
		❍						Checking the state of control device storage	
		☐	❍					Checking the state of sensors, actuators, cable retainers and plugs	
Fuel system (see operation manual of the engine manufacturer on CD)									
●								Check water separator on the fuel pre-filter and draining water if required	
		❍						Check lubricating oil system and fuel system for leaks and condition	
		❍						Change fuel pre-filter (or in case of drop in performance)	
		❍						Change fuel fine filter (or in case of drop in performance)	
							✧	Ventilate the fuel system (injection lines may not be undone)	
Fuel tank (see operation manual of the engine manufacturer on CD)									
	●							Draining water and bottom sediments	
Refuelling pump									
			❍					Checking that the refuelling pump works properly and does not leak	
Air filter system									
●								Checking the negative pressure indicator	1813
	●							Cleaning the air filter dust ejector	1814
							✧	Exchanging the dry air filter main element (according to maintenance indicator/ annually)	1814

LWN/LR.x/V03.01//Auslieferung/2015-06-03/en

copyright by LIEBHERR

Customer:.....Machine type:..... Serial no.:..... Operating hours:.....Date:.....

Maintenance / inspection after service hours								Tasks to be performed	
8h/Daily	40h/Weekly	500h/Quarterly	1000h/Every six months	2000h/Annually	4000h/2 years	6000h/3 years	Special intervals	**By maintenance staff** ■ Once-only activity ● Repeat interval ✦ If necessary ❄ Annually before the winter **By authorised specialist staff** ☐ Once-only activity ❍ Repeat interval ✧ If necessary	See page
							✧	Exchanging the dry air filter safety element (with each 3rd exchange of the main element/annually)	1814
Exhaust aftertreatment system (see operation manual of the engine manufacturer on CD)									
	●							Visual inspection of SCR system	
		☐	❍					Checking the profile clamp for correct tightening torque	
Cooling system (see operation manual of the engine manufacturer on CD)									
●								Checking the coolant level	
		❍						Checking cooling system and heating system for leaks and condition	
				❍			❄	Check anti-corrosive concentration and antifreeze concentration in coolant (at least 1 x a year)	
							❍	Change coolant (anti-freeze OS mix) every 6,000 hours (at least every 4 years)	
Distributor gearbox									
●								Checking the gearbox oil level	1816
●								Checking the venting valve	1818
		☐	❍					Changing the gearbox oil	
				❍				Check fastening screws for tight fit	
Swing									
	●							Checking the gearbox oil level	1819
			❍					Check gearbox for leaks	
		☐		❍				Changing the gearbox oil	
					❍			Check the fastening screws for tight fit (fastening screws may only be used for a maximum of 2 more further assembly procedures)	
			❍					Visually checking the pinion and crown gear	
			❍					Checking that the stopping brakes are working	
Swing connection									
		☐			❍			Checking the fastening screws for tight fit (exchanging fastening screws and nuts at each bearing exchange)	
●								Lubricating external teeth	1821
●								Lubricating the bearing races via the central lubrication point (preferably at the end of the shift)	1821
							✧	Measuring the bearing play	
winch1/winch2									
	●							Checking the gearbox oil level	1823
			❍					Checking winch gearbox for leaks and if necessary carrying out an oil analysis	
		☐		❍				Changing the gearbox oil	

LWN/LR.x/V03.01//Auslieferung/2015-06-03/en

copyright by LIEBHERR

Customer:.....Machine type:..... Serial no.:..... Operating hours:.....Date:.....

Maintenance / inspection after service hours								Tasks to be performed	
8h/Daily	40h/Weekly	500h/Quarterly	1000h/Every six months	2000h/Annually	4000h/2 years	6000h/3 years	Special intervals	**By maintenance staff** ■ Once-only activity ● Repeat interval ✦ If necessary ❄ Annually before the winter **By authorised specialist staff** ☐ Once-only activity ❍ Repeat interval ✧ If necessary	See page
	●							Lubricating the counter bearing, if possible	1824
	●							Checking the rope end fastening for tight fit	1825
			❍				✧	Checking 3-windings limit switch for tight fit and function (at 1,000h or when changing ropes)	
			❍					Check winch for tight fit (pin clearance, pin locking)	
			❍					Check fastening screws for tight fit	
				❍				Performing a visual inspection	
			❍					Checking that the stopping brakes are working	
			❍					Checking that the free-fall brake is working (if present)	
						❍		Hydraulic motor and drive planetary stage: checking the tooth profile for wear	
Boom luffing winches									
	●							Checking the gearbox oil level	1826
			❍					Checking winch gearbox for leaks and if necessary carrying out an oil analysis	
		☐		❍				Changing the gearbox oil	
	●							Lubricating the counter bearing, if possible	1827
	●							Checking the rope end fastening for tight fit	1828
			❍					Check winch for tight fit (pin clearance, pin locking)	
			❍					Check fastening screws for tight fit	
				❍				Performing a visual inspection	
			❍					Checking that the stopping brakes are working	
						❍		Hydraulic motor and drive planetary stage: checking the tooth profile for wear	
Rope reeving winch									
			❍					Checking winch gearbox for leaks and if necessary carrying out an oil analysis	
			❍				✧	Changing gearbox oil (at 1,000 hrs or when exchanging ropes)	
	●							Lubricating the counter bearing, if possible	1829
							✦	Checking rope end attachment for tight fit when starting up rope reeving winch	1829
			❍					Check winch for tight fit (pin clearance, pin locking)	
			❍					Check fastening screws for tight fit	
Tagline winch									
	●							Checking the gearbox oil level	1830
			❍					Checking winch gearbox for leaks and if necessary carrying out an oil analysis	
		☐		❍				Changing the gearbox oil	
	●							Lubricating the rope bracket on the boom base section and checking pulleys for damage	1831
	●							Checking the rope end fastening for tight fit	1832

LWN/LR.x/V03.01//Auslieferung/2015-06-03/en

copyright by LIEBHERR

Customer:.....Machine type:..... Serial no.:..... Operating hours:.....Date:.....

Maintenance / inspection after service hours								Tasks to be performed	
8h/Daily	40h/Weekly	500h/Quarterly	1000h/Every six months	2000h/Annually	4000h/2 years	6000h/3 years	Special intervals	**By maintenance staff** ■ Once-only activity ● Repeat interval ✦ If necessary ❄ Annually before the winter **By authorised specialist staff** ☐ Once-only activity ❍ Repeat interval ✧ If necessary	See page
			❍					Check winch for tight fit (pin clearance, pin locking)	
			❍					Check fastening screws for tight fit	
			❍					Check holding brake (if available) for function	
								Crawlers	
	●							Checking the gearbox oil level	1833
		☐		❍				Changing the gearbox oil	
			❍					Check fastening screws for tight fit	
	●							Check gearbox and hydraulic connections for leaks	1834
			❍					Visually inspect crawler components (carrying rollers, running rollers, idlers, track pads)	
	●							Clean the crawlers, earlier if necessary	1834
			❍					Checking screws, nuts, pins for tight fit	
	●							Checking that the crossbeam set screws on the crawler side frames are secure on telescopic undercarriages	1835
	●		❍					Check chain guides for wear and tight fit	
	●							Checking the chain tension, earlier if necessary	1836
	●							Checking locking screws of the track pads axes	1843
								Lifting device	
●			❍					Check transport lashing and round slings for wear (according to EN 1492-2).	1844
●			❍					Check the round steel chains for wear and damage	1844
								Hook/pulley block	
	●			❍				Checking all hooks/pulley blocks for damage, wear, corrosion and widening of the hook aperture	1845
	●			❍				Lubricate bearings and axels, check rope fixing point, check for ease of movement and wear of pulleys, check that rope protection and locking elements are in place and undamaged	1845
●								Check that the safety catch is present and working properly	1846
								Hydraulic system	
●								Check the hydraulic system for leaks	1847
	●							Checking the oil cooler for contamination	1847
			❍					Checking that the engines and the screw fittings are tight	
								Hydraulic oil tank	
							●	Carry out a hydraulic oil analysis ten hours after every oil change (reference measurement)	1848
							●	Carry out a hydraulic oil analysis after 500 hrs	1848
							●	Carry out a hydraulic oil analysis after 1000 hrs / 1 year	1848

LWN/LR.x/V03.01//Auslieferung/2015-06-03/en

copyright by LIEBHERR

Customer:.....Machine type:..... Serial no.:..... Operating hours:.....Date:.....

Maintenance / inspection after service hours								Tasks to be performed	
8h/Daily	40h/Weekly	500h/Quarterly	1000h/Every six months	2000h/Annually	4000h/2 years	6000h/3 years	Special intervals	**By maintenance staff** ■ Once-only activity ● Repeat interval ✦ If necessary ❄ Annually before the winter **By authorised specialist staff** ☐ Once-only activity ❍ Repeat interval ✧ If necessary	See page
							●	Hydraulic oil NOT supplied by LIEBHERR must be changed after 2000 hrs / 2 years	1848
							●	Change Liebherr "Hydraulik 37" oil after 4000 hrs / 4 years	1848
							●	Change Liebherr "Hydraulik Plus" and "Hydraulik Plus Arctic" oil after 6000 hrs / 6 years	1848
			❍					Changing the venting filter	
	●		❍					Cleaning the magnetic rod in the return filter	1849
								Hydraulic oil heater	
			❍					Checking that the hydraulic oil heater is working properly	
								Hydraulic oil filter	
		☐	❍					Exchanging the hydraulic oil filter elements	1853
								Accumulator	
			❍					Check the accumulator	
					❍			Changing the accumulator	
								Hydraulic cylinders	
			❍					Check that the hydraulic cylinder fits properly and does not leak	1855
	●							Protecting the piston rods of the hydraulic cylinders from corrosion	1855
							✦	Preserving the piston rods of the hydraulic cylinders in case of longer periods of non-use	1855
								Hydraulic hoses	
	●							Checking the hydraulic hoses	1856
							❍	Change hydraulic hoses every 10 years; time interval dependent on imprinted date in accordance with FEM 5.020 (observe national law)	
								Rotary connection	
			❍					Checking that the rotary connection is firmly attached and does not leak	
								Bypass filter system	
	●							Checking the bypass filter system	1857
			❍					Changing the filter elements	1857
								Batteries	
			❍					Cleaning battery connections, greasing with terminal fat	
			❍					Checking the fluid level in the cells	1860
			❍					Checking the battery pre-warming for correct function	
								Lighting	
●								Checking that the cabin lighting, floodlights and auxiliary floodlights are working properly	1862

LWN/LR.x/V03.01//Auslieferung/2015-06-03/en

copyright by LIEBHERR

Maintenance and inspection schedule

Customer:.....Machine type:..... Serial no.:..... Operating hours:.....Date:.....

Maintenance / inspection after service hours								Tasks to be performed	
8h/Daily	40h/Weekly	500h/Quarterly	1000h/Every six months	2000h/Annually	4000h/2 years	6000h/3 years	Special intervals	**By maintenance staff** ■ Once-only activity ● Repeat interval ✦ If necessary ❄ Annually before the winter **By authorised specialist staff** ☐ Once-only activity ❍ Repeat interval ✧ If necessary	See page
								Rope measuring system	
●			❍					Checking the rope measuring system and height adjustment of all winches (if available) for correct function	1872
							✦	Readjusting layer change when changing ropes	1872
								GSM/GPRS/GPS modem	
			❍					Checking GSM/GPRS/GPS modem for correct function	
								PDR*	
							✧	Checking correct function of PDE	
								Limit switches	
●								Checking hoist limit switches, boom limit switches and, if necessary, limit switches of the piling and drilling rig to ensure they are working correctly	1873
								Mechanical inclinometer	
●								Checking that the mechanical inclinometer is working properly	1874
								Emergency stop	
	●							Checking the emergency stop	1875
								Load moment limiter (LML)	
				❍				Checking that the system shuts down properly	
								Obstacle warning light*	
	●							Check obstacle warning light for function and damage, check mains cable and plug (if available) for damage	1876
								Emergency control system	
			❍					Checking emergency control system for correct function	
								Fire extinguishers	
				❍				Checking the seals and inspection dates on the fire extinguishers	1877
								Personal protective equipment	
●								Checking that the personal protective gear is in place, intact and complete	1878
								Safety signs	
	●							Checking that all required safety labels are mounted on the machine and are legible	1879
								Access systems and railings	
●								Checking ladders, steps, platforms, and ascents for wear, damage and anti-slip surfaces	1880
●								Checking latches and hand rails for wear and damage	1880
	●							Checking the spring tension of railing doors	1880

LWN/LR.x/V03.01//Auslieferung/2015-06-03/en

copyright by LIEBHERR

Customer:.....Machine type:..... Serial no.:..... Operating hours:.....Date:.....

Maintenance / inspection after service hours								Tasks to be performed	
8h/Daily	40h/Weekly	500h/Quarterly	1000h/Every six months	2000h/Annually	4000h/2 years	6000h/3 years	Special intervals	**By maintenance staff** ■ Once-only activity ● Repeat interval ✦ If necessary ❄ Annually before the winter **By authorised specialist staff** ☐ Once-only activity ❍ Repeat interval ✧ If necessary	See page
	●							Checking the function of the railing stabilization	1883
Steel structure									
●				❍				Checking the machine steel structure for damage, cracks	1885
Main boom									
	●			❍				Check main boom base section, main boom head and main boom sections for damage and wear (cracks, notches, corrosion, plastic deformation, wear)	1888
	●			❍				Main boom base section: Check knuckle pins and locking elements for tight fit	1889
	●							Main boom base section or A-frame1: check function of the mechanical angle indicator, lubricate if necessary	1890
	●		❍					Main boom head: Check screw connections and pin connections for tight fit, check rope fixing points for tears, check that rope protection and locking springs are in place and undamaged	1891
	●							Checking the anemometer for tight fit and function	1891
	●			❍				Auxiliary jib: Check screw connections and pin connections for tight fit, check rope fixing points for tears, check that rope protection and locking springs are in place and undamaged	1892
Jib									
	●			❍				Check jib base section, jib head and jib sections for damage and wear (cracks, notches, corrosion, plastic deformation, wear)	1893
			❍					Tilting-back supports: Checking the accumulator in accordance with the German Pressurized Vessel Ordinance and for tight fit	
	●							Check locking flaps for ease of movement, additionally during every assembly/ disassembly	1899
	●							Jib head: Checking wheels for ease of movement	1900
	●							Checking the anemometer for tight fit and function	1900
			❍					Checking hydraulic tilting-back supports of A-frame3 and hydraulic connections for tightness	
	●							Jib base section: Checking screw connections and pin connections for tight fit, checking that locking springs are in place and undamaged	1901
Steel pendant straps									
	●			❍				Check steel pendant straps and pins for damage and wear and check that locking springs and split pins are present (cracks, notches, corrosion, plastic deformation, wear, lubrication, etc.)	1906
		❍						Checking the ease of movement of pin connections in the entire pendant strap strand	1907
	●							Protecting steel pendant straps, connecting links and pins from corrosion	1907
	●			❍				Checking connecting links for damage and wear	1907

LWN/LR.x/V03.01//Auslieferung/2015-06-03/en

copyright by LIEBHERR

Customer:.....Machine type:..... Serial no.:..... Operating hours:.....Date:.....

Maintenance / inspection after service hours								Tasks to be performed	
8h/Daily	40h/Weekly	500h/Quarterly	1000h/Every six months	2000h/Annually	4000h/2 years	6000h/3 years	Special intervals	**By maintenance staff** ■ Once-only activity ● Repeat interval ✦ If necessary ❄ Annually before the winter **By authorised specialist staff** ☐ Once-only activity ❍ Repeat interval ✧ If necessary	See page
	●			❍				Checking tension load cells for damage and wear, checking electricity connections for tight fit	1907
								Carbon-fibre pendant straps	
	●			❍				Check CF pendant straps and pins for damage and wear and check that locking springs and split pins are present (cracks, notches, corrosion, plastic deformation, wear, lubrication, etc.)	1910
		❍						Checking the ease of movement of pin connections in the entire pendant strap strand	1912
	●							Protecting CF pendant strap bushes, connecting links and pins from corrosion	1912
	●			❍				Checking connecting links for damage and wear	1913
	●			❍				Checking tension load cells for damage and wear, checking electricity connections for tight fit	1913
								Pendant ropes	
	●			❍				Check pendant ropes and pins for damage and wear and check that locking springs and cotter pins are present (cracks, notches, corrosion, plastic deformation, wear, lubrication, etc.)	1914
	●							Protecting pendant ropes, connecting links and pins from corrosion	1914
	●			❍				Checking connecting links for damage and wear	1915
						❍		Changing pendant ropes	
								Counterweight	
●								Checking the screws of the rear counterweight tie-down for tight fit (with exception of LR 1001.xx.xx)	1916
	●							Checking the rear counterweight, fixing lugs and round steel chains for damage, wear and secure fit	1916
	●							Checking locking elements for availability, damage, wear and tight fit	1917
	●							Checking counterweight supports (pins, shackles) for damage and wear	1917
								Lubrication system	
●								Checking the function of the central lubrication system	1918
								Derrick equipment*	
	●			❍				Check derrick boom base section, derrick boom head and derrick boom sections for damage and wear (cracks, notches, corrosion, plastic deformation, wear)	1920
	●							Greasing the bearing of the derrick boom base section	1920
	●							Greasing the extension device of the counterweight carriage (strut, uppercarriage pin connection)	1921
●								Checking the air pressure of the counterweight carriage	1921
●								Checking the tires of the counterweight carriage for damage	1922

LWN/LR.x/V03.01//Auslieferung/2015-06-03/en

copyright by LIEBHERR

Customer:.....Machine type:..... Serial no.:..... Operating hours:.....Date:.....

Maintenance / inspection after service hours								Tasks to be performed	
8h/Daily	40h/Weekly	500h/Quarterly	1000h/Every six months	2000h/Annually	4000h/2 years	6000h/3 years	Special intervals	**By maintenance staff** ■ Once-only activity ● Repeat interval ✦ If necessary ❄ Annually before the winter **By authorised specialist staff** ☐ Once-only activity ❍ Repeat interval ✧ If necessary	See page
	●							Lubricating the axes and swing arms of the counterweight carriage's wheel sets	1922
	●							Lubricating the drive units of the counterweight carriage's wheel sets	1923
	●							Checking the gearbox oil level in the counterweight carriage's axle gearbox	1924
			❍					Checking the gearbox oil in the counterweight carriage's axle gearbox	
	●							Checking the hydraulic cylinders of the counterweight carriage's wheel sets for tightness	1927
	●							Checking the hydraulic connections on the counterweight carriage for tightness	1927
●								Checking the screws of the counterweight tie-down for tight fit	1928
								Ropes	
●								Check that the ropes are guided correctly over the rope pulleys and that the rope winds correctly onto the drum	
	●							Check ropes for wear, tight fit and lubrication	1930
								Rope pulleys	
	●							Checking all pulleys for ease of movement, signs of wear and damage	1957
							●	Greasing all pulleys in accordance with lubrication chart	
								Rope suspension and rope fixation	
	●							Checking rope suspensions (rope clamps, rope thimbles) for wire breaks, absence of corrosion and tight fit of screw fittings	1961
	●							Checking the pocket locks	1962
	●							Checking the rope end fittings for cracks and replacing entire rope if necessary	1963
								Cab	
●								Check the windows of the cab for damage	1965
●								Checking that the cab door and the door lock work properly	1965
●								Check cabin roof protection guard for damage, locking (in case of foldable design)	1965
●								Checking outside mirrors and inside mirrors for damage	1967
	●							Checking the operation of the hydraulic cab tilting device	1967
	●							Hydraulic cab tilting device: check hydraulic cylinders, hydraulic hoses and connections for leaks and damage	1967
	●							Hydraulic cab elevation system: Checking the operation of the acoustic warning signal, checking the operation of the operating elements (valves, display etc.), checking that the safety chain is present and works properly	1968
	●							Hydraulic cabin lift: Checking hydraulic hoses and connections for leaks and damage, checking for the presence and operation of the lowering device, checking the cabin suspension point for damage, checking the emergency	1968

LWN/LR.x/V03.01//Auslieferung/2015-06-03/en

copyright by LIEBHERR

Customer:.....Machine type:..... Serial no.:..... Operating hours:.....Date:.....

Maintenance / inspection after service hours								Tasks to be performed	
8h/Daily	40h/Weekly	500h/Quarterly	1000h/Every six months	2000h/Annually	4000h/2 years	6000h/3 years	Special intervals	**By maintenance staff** ■ Once-only activity ● Repeat interval ✦ If necessary ❄ Annually before the winter **By authorised specialist staff** ☐ Once-only activity ❍ Repeat interval ✧ If necessary	See page
								lowering system, checking the presence and fit of the pin connection on the locking elements	
				❍			✦	Cleaning or replacing the filter insert in the cabin	1969
Ventilation, heating and air-conditioning									
	●							Checking the recirculated air filter for contamination	1971
							✦	Replace recirculated air filter (at least every 200h)	1972
	●							Checking the fresh air filter for contamination	1973
							✦	Replace fresh air filter (at least every 200h)	1974
							●	Check coolant level monthly in inspection glass	1975
							✧	Filling in coolant	
							●	Check condenser monthly for contamination	1977
							●	Check condenser monthly for loose leads, loos screws and corrosion	1978
							●	Check fan on condenser for function, tight fit and damage monthly	1978
			❍				❄	Checking the function of the ventilation, heating and air conditioning system	
			❍					Checking the air conditioning system for function and leaks	
							●	Check climate box for contamination every 200h	1979
			❍					Heating circuit: Check hoses for leaks or damage	
							●	Check dryer monthly for damage and corrosion	1979
				❍			✧	Replace dryer (after 2000h or after each opening of the coolant circuit)	
			❍					Check A/C compressor for tight fit	
			❍					Checking the drive belts of the A/C compressor for damage	
			❍					Checking the condenser and vaporizer for dirt	
			❍				●	Starting the ventilation, heating, air conditioning, external air conditioning system* and auxiliary heating system* and ensuring that sufficient antifreeze has been added to the water circuit	1980
							❄	Reading and analyzing the error memory of the auxiliary water heating*	
							❄	Checking the electric connections of the auxiliary water heating* for contact corrosion and tight fit	
							❄	Checking exhaust pipe and flue gas pipe of auxiliary water heating* for damage and free passage	
							❄	Checking fuel line, coolant circuit and hoses of auxiliary water heating for leaks and tears	
							❄	Replacing the fuel filter of auxiliary water heating	1982
HATZ diesel engine* (see operation manual of the engine manufacturer on CD)									
							❍	Change engine oil every 250h	
							❍	Check and adjust valve clearance every 250h	

LWN/LR.x/V03.01//Auslieferung/2015-06-03/en

copyright by LIEBHERR

Customer:.....Machine type:..... Serial no.:..... Operating hours:.....Date:.....

Maintenance / inspection after service hours								Tasks to be performed	
8h/Daily	40h/Weekly	500h/Quarterly	1000h/Every six months	2000h/Annually	4000h/2 years	6000h/3 years	Special intervals	**By maintenance staff** ■ Once-only activity ● Repeat interval ✦ If necessary ❄ Annually before the winter **By authorised specialist staff** ☐ Once-only activity ❍ Repeat interval ✧ If necessary	See page
							❍	Clean cooling air zone every 250h	
							❍	Check screw connections every 250h	
		❍						Changing the fuel filter	
		❍						Changing the dry air filter	
			❍					Cleaning the oil filter	
	●							Checking the oil level	
●								Checking the suction zone of the combustion air and cooling air	
							❍	Check belt drive every 100h	1985
			❍					Replacing the belt drive including vibration damper, deflection pulley and springs	1985
Function lock*									
		❍						Checking that the function lock is working properly	
Machine care									
							❍	Check the preservation protection (intervals from 6 months)	1987
							❍	Reapply preservation protection (intervals from 2 months)	1987

LWN/LR.x/V03.01//Auslieferung/2015-06-03/en

copyright by
LIEBHERR

9.2 Lubricants and consumables

Obeying the guidelines for lubrication and the use of fuels guarantees maximum reliability and a long machine life.

Cleanliness is important when handling lubricants and operating materials.

Note
Environmental pollution!

▶ Fluids such as hydraulic oil, fuel and coolant must be disposed of in accordance with national and international regulations and guidelines.

Lubricants have three main tasks:
– Reducing friction
– Preventing corrosion
– Removing dirt and abrasion particles

The higher the quality of the lubricant, the longer the service life of the components and the lower the wear. Higher-quality lubricants have less moisture content, which reduces consumption.

The specified lubrication intervals must not be exceeded, but can be shortened if necessary. Shortening of intervals largely depends on the operating conditions.

NOTICE
Insufficient lubrication!
Damage to machine.

▶ The prescribed lubrication intervals on the lubrication diagram must be observed.

LWN/LR.x/V03.01//Auslieferung/2015-06-03/en

copyright by
LIEBHERR

9.2.1 Lubrication diagram

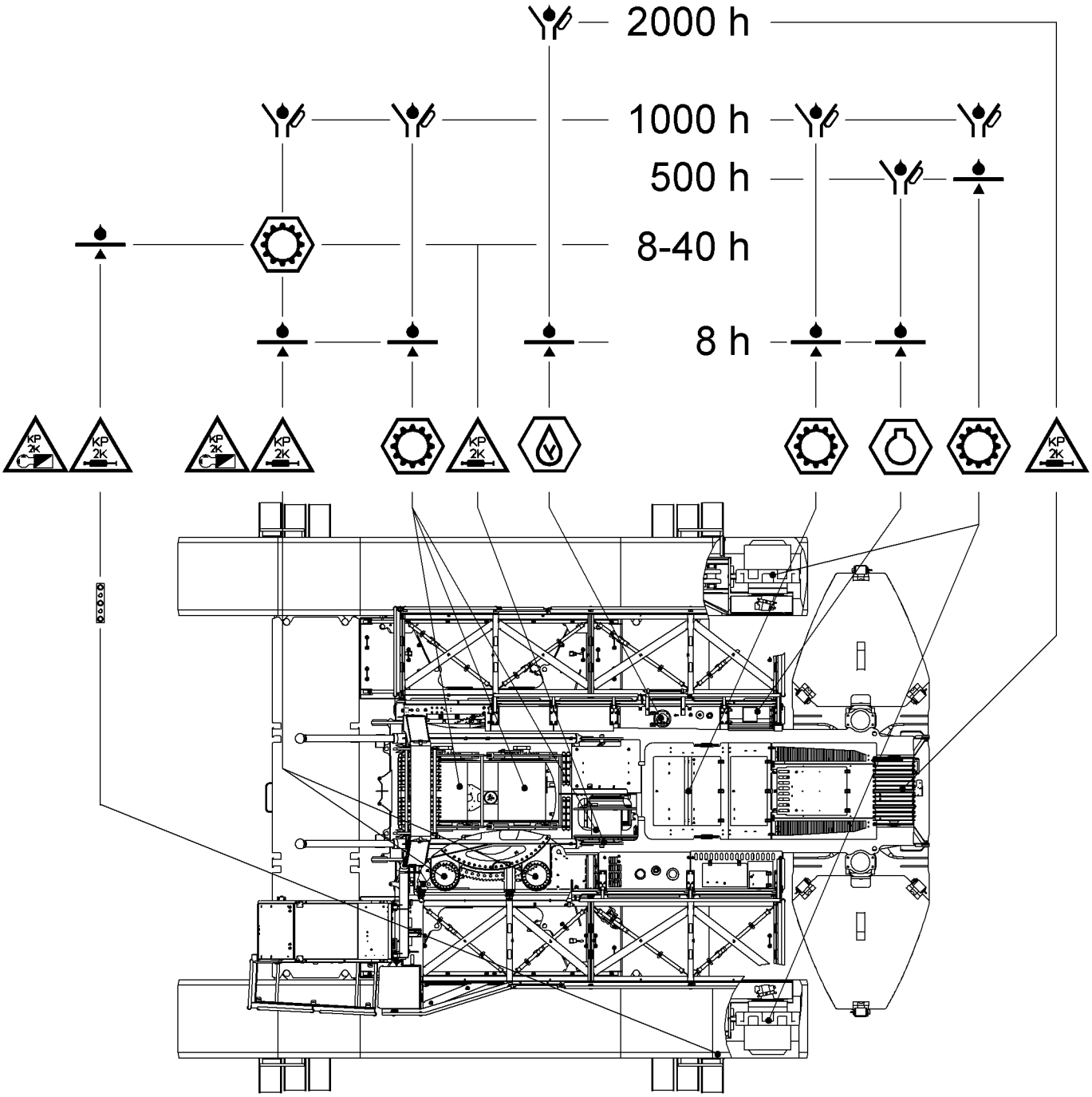

Fig. 5699: Basic machine lubrication chart

LWN/LR.x/V03.01//Auslieferung/2015-06-03/en

copyright by
LIEBHERR

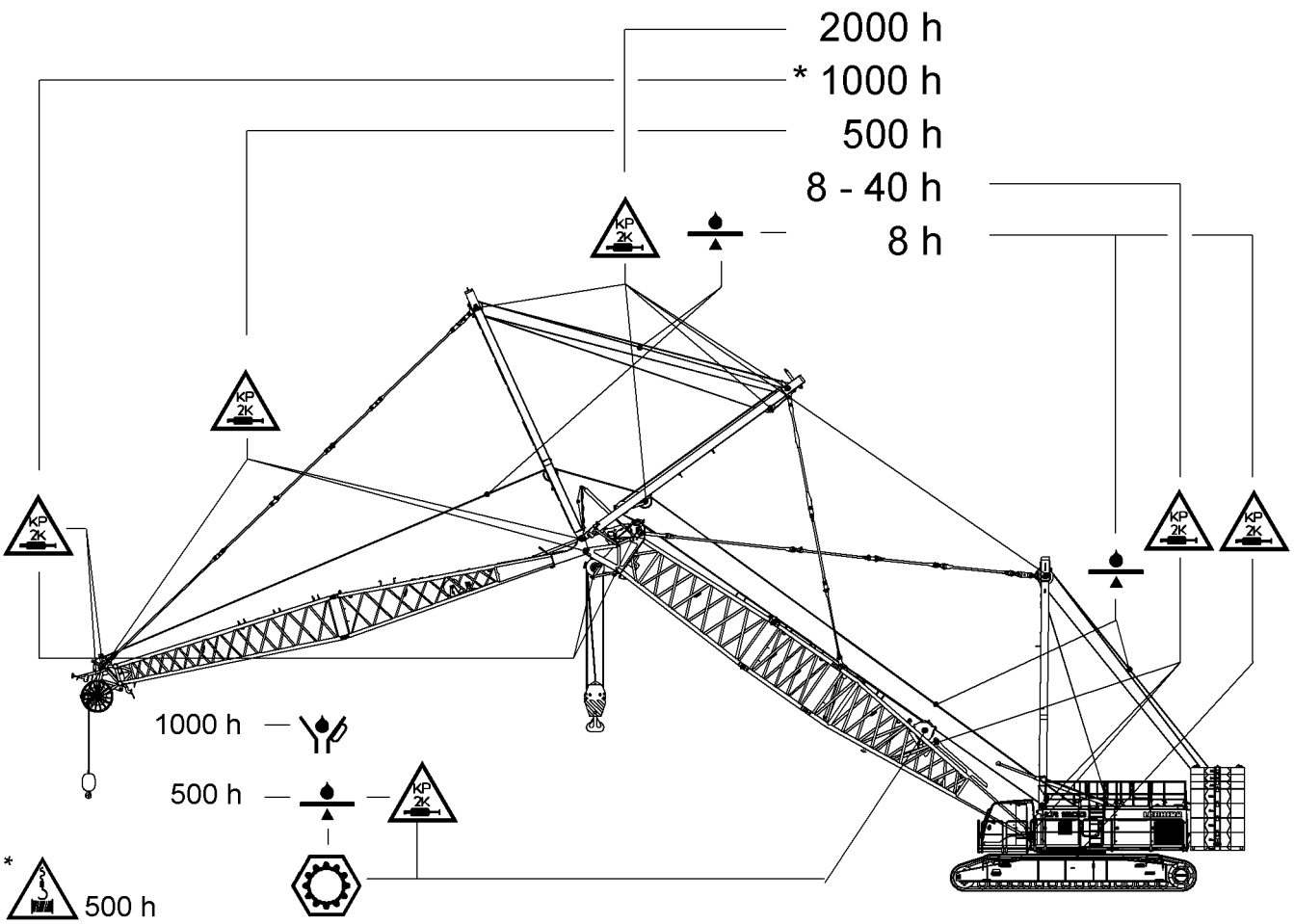

Fig. 5700: Boom lubrication chart

Key:

Diesel engine

gearbox

Hydraulics

Grease

Central lubrication (optional)

Changing oil

LWN/LR.x/V03.01//Auslieferung/2015-06-03/en

Lubricating, oiling

Free-fall operation

9.2.2 Filling capacity table

Component	Volume	Remark
Diesel engine	see operation manual of the engine manufacturer on CD	
Distribution gearbox	7 l 1.85 gal	4 power take-offs
Crawler drive	34 l 8.98 gal	per item
Swing gear	11.2 l 2.96 gal	per item
Winch1/winch2 (crane winch)	15.5 l 4.09 gal	
Winch1/winch2 (free-fall winch)	19 l 5.02 gal	
Main boom luffing winch	7.5 l 1.98 gal	
Jib luffing winch	4.8 l 1.27 gal	
Rope reeving winch	0.4 l 13.53 oz	
Hydraulic oil tank	820 l 216.62 gal	
Fuel tank	750 l 198.13 gal	
Urea tank	78 l 20.61 gal	

Tab. 584: Filling capacity table

LWN/LR.x/V03.01//Auslieferung/2015-06-03/en

copyright by
LIEBHERR

9.2.3 Lubrication chart

No.	Lubrication spots	Outside temperature	Type ISO VG/SAE	Specification	Liebherr Lubricants
1	**Diesel engine stage 0 to 3B/ tier 0 to 4i**	all year around down to -20 °C (-4 °F) below -20 °C (-4 °F) with pre-heating	SAE 10W-40	ACEA E4 API CF	**Liebherr Motoroil 10W-40**
		all year around down to -20 °C (-4 °F) below -20 °C (-4 °F) with pre-heating	SAE 10W-40 low ash	ACEA E4-99 / E6 / E7 API CF-4 / CG-4 CH-4 / CI-4	**Liebherr Motoroil 10W-40 low ash** required when using particulate filters
	Diesel engine stage IV/tier4f	all year around down to -30 °C (-22 °F) below -30 °C (-22 °F) with pre-heating	SAE 5W-30	ACEA E4 / E7 API CF	**Liebherr Motoroil 5W-30**
		all year around down to -30 °C (-22 °F) below -30 °C (-22 °F) with pre-heating	SAE 5W-30 low ash	ACEA E6 / E7	**Liebherr Motoroil 5W-30 low ash** required when using particulate filters
2	**Mechanical gearboxes, winches and drive axles**	down to -25 °C (-13 °F) down to -40 °C (-40 °F)	SAE 85W-90 ISO VG 220	API GL 5 DIN51 502	**Liebherr Hypoid EP 90** **Liebherr Syntogear Plus 220**
		to -50 °C (-58 °F) + 30 °C (86 °F)	SAE 75W-90	API GL 4; GL 5; MT 1	**Liebherr Syntogear Plus 75W-90**
3	**Hydrostatic drive, hydro-steer**	to -25 °C (-13 °F) + 50 °C (122 °F) [B)]	ISO VG 32 - 46 SAE 10W-20 ATF [A)]	DIN 51 524 / T3 HVLP 1.DEXRON II D/E	**Liebherr Hydraulic 37**
		to -25 °C (-13 °F) + 50 °C (122 °F) [B)]	ISO VG 46 (32-68) SAE 10W-20	DIN 51 524 / T3 HVLPD HC in acc. with CEC-L-33-A-93	**Liebherr Hydraulic Plus** biodegradable
		to -50 °C (-58 °F) + 30 °C (86 °F)	ISO VG 15 - 46 SAE 0W-20	DIN 51 524 / T3 HVLPD HC in acc. with CEC-L-33-A-93	**Liebherr Hydraulic Plus Arctic** biodegradable
4	**Hydraulic additive for free-fall brake**			DIN 51 757 DIN 51 562	**Liebherr special additive NL**

LWN/LR.x/V03.01//Auslieferung/2015-06-03/en

copyright by LIEBHERR

No.	Lubrication spots	Outside temperature	Type ISO VG/SAE	Specification	Liebherr Lubricants
5	**Roller bearings, friction bearings, ball bearing swing rings, cardan joints, other grease lubrication**	to -25 °C (-13 °F) + 150 °C (302 °F) For lubrication systems to -20 °C (-4 °F) + 150 °C (302 °F)	Grease, lithium saponified	DIN 51 502 KP 2 K-30 KPF 2 N-25	**Liebherr Universal Grease 9900**
		to -60 °C (-76 °F) + 140 °C (284 °F) For lubrication systems to -55 °C (-67 °F) + 140 °C (284 °F)		DIN 51 502 KPFHC 1N-60	**Liebherr Universal Grease Arctic**
6	**Open cogwheels and crown gears**	to -25 °C (-13 °F) + 150 °C (302 °F) For lubrication systems to -20 °C (-4 °F) + 150 °C (302 °F)	Lubrication and preservation	DIN 51 502 OGPF 2	**Liebherr Universal Grease 9900**
		to -60 °C (-76 °F) + 140 °C (284 °F) For lubrication systems to -55 °C (-67 °F) + 140 °C (284 °F)		OGPF 1	**Liebherr Universal Grease Arctic**
		all sections		OGPF 00	**Liebherr spray paste**
7	**Ropes**	to -40 °C (-40 °F) + 50 °C (122 °F)			**Liebherr WR-Lube SC**
8	**Telescopic boom**	all sections	Special instruction	DIN 51 502 KP 2 K-30	**Liebherr grease for telescopic components 9613 Plus**
9	**Coolant**	down to -37 °C (-35 °F)		DIN 51 757/4 DIN 51 432/2	**Liebherr Antifreeze OS Mix**

Tab. 585: Lubrication chart

A) The use of AFT oil is mandatory with lamella disk brakes if no Liebherr oil is being used.
B) With activated oil pre-heating, the outside temperature may be approx. 10 °C (50 °F) lower.

LWN/LR.x/V03.01//Auslieferung/2015-06-03/en

copyright by LIEBHERR

Note
The known specifications listed in the Liebherr lubrication chart only ensure a minimum standard of oils and greases.
The high-quality Liebherr products are co-developed and co-tested. It can therefore not be guaranteed that products of a different quality perform the function of the machine to the same extent as the original products.
If the customer uses oils and grease by other manufacturers, the manufacturer and/or supplier must confirm its conformity with the required specifications to the customer. Due do the large number of lubricants and manufacturers, Liebherr is not in a position to perform this test.
The warranty is still valid if the customer uses lubricants of an equal or higher quality by a different manufacturer that meet the specifications of the Liebherr lubrication chart.

▶ In case of questions about Liebherr lubricants contact the Liebherr lubricant hotline +49 (0) 7354/80-6060 or lubricants@liebherr.com.

Ordering data

Engine oil

	5 l (1.32 gal) canister	20 l (5.28 gal) canister	210 l (55.48 gal) barrel	1000 l (264.17 gal) container
Liebherr engine oil 10W-40	10 29 05 06	10 33 02 39	10 33 02 46	10 28 62 79
Liebherr engine oil 10W-40 low ash	10 32 61 13	10 32 61 12	10 32 61 11	10 32 61 10
Liebherr engine oil 5W-30	10 42 57 12	10 42 57 13	10 42 57 15	10 42 57 19
Liebherr engine oil 5W-30 low ash	11 06 60 29	11 06 60 30	11 06 60 31	11 06 60 32

Tab. 586: Order note engine oil

Gear oil

	5 l (1.32 gal) canister	20 l (5.28 gal) canister	210 l (55.48 gal) barrel	1000 l (264.17 gal) container
Liebherr Hypoid 90 EP	10 66 48 74	10 66 48 75	10 66 48 76	10 44 16 36
Liebherr Syntogear Plus 75W-90	10 33 02 85	10 33 02 87	10 33 02 88	10 29 64 77
Liebherr Syntogear Plus 220	10 19 03 87	10 19 03 88	10 19 03 89	10 19 03 90

Tab. 587: Order notice gearbox oil

Hydraulic oil

	5 l (1.32 gal) canister	20 l (5.28 gal) canister	210 l (55.48 gal) drum	1000 l (264.17 gal) container
Liebherr Hydraulic 37	10 66 48 65	10 66 48 67	10 66 47 12	10 66 48 56
Liebherr Hydraulic Plus	10 29 64 80	10 33 02 72	10 33 02 76	10 29 64 81

LWN/LR.x/V03.01/Auslieferung/2015-06-03/en

copyright by LIEBHERR

	5 l (1.32 gal) canister	20 l (5.28 gal) canister	210 l (55.48 gal) drum	1000 l (264.17 gal) container
Liebherr Hydraulic Plus Arctic	10 29 64 79	10 33 02 77	10 33 02 78	10 29 64 78

Tab. 588: Hydraulic oil ordering data

Oil concentrate

	5 l (1.32 gal) canister	20 l (5.28 gal) canister
Liebherr special additive NL	10 51 53 00	10 51 57 52

Tab. 589: Order notice oil concentrate

Grease

	Cartridge	5 kg (11.02 lb) bucket	10 kg (22.05 lb) bucket	25 kg (55.11 lb) bucket
Liebherr Universal Grease 9900	10 29 68 16 (400 g (0.88 lb))		10 29 68 13	10 29 68 12
Liebherr Universal Grease Arctic	10 29 68 28 (400 g (0.88 lb))		10 29 68 25	10 29 68 24
Liebherr spray paste	10 33 03 08 (950 g (2.09 lb))	10 33 03 11		
Liebherr grease for telescopic components 9613 Plus				10 33 03 15
Liebherr WR-Lube SC	10 17 33 71 (600 ml (20.29 oz) aerosol)			

Tab. 590: Order note greases

Coolant

	5 l (1.32 gal) canister	20 l (5.28 gal) canister	210 l (55.48 gal) barrel	1000 l (264.17 gal) container
Liebherr Antifreeze OS Mix	10 65 73 89	11 65 73 90	11 65 73 91	11 65 37 92

Tab. 591: Order note coolant

Oil analysis kit

88 56 018 14

9.2.4 Diesel engine lubricating oil

For further information please refer to the operation manual of the engine manufacturer on CD.

LWN/LR.x/V03.01//Auslieferung/2015-06-03/en

copyright by LIEBHERR

9.2.5 Fuel

For further information please refer to the operation manual of the engine manufacturer on CD.

The machine may be operated with diesel fuel with a maximum sulfur content of 50 mg/kg (50 ppm) under the following conditions:
– Specified diesel fuel with a sulfur content of max. 15 mg/kg (15 ppm) is not available.
– Upon receipt od the specification, Liebherr approves this diesel fuel.
– The operator is aware that components (catalyst, temperature sensor, NO_x sensor) will age faster.

9.2.6 Urea solution

The required qualification of the urea solution is NOx reduction agent AUS 32 in accordance with DIN 70070/ISO 22241.

9.2.7 Diesel engine coolant

For further information please refer to the operation manual of the engine manufacturer on CD.

9.2.8 Hydraulic oil

Initial filling

The information sign on the hydraulic tank filler neck displays the hydraulic oil with which the machine was first filled.

If the initial filling was performed by Liebherr, the machine was initially filled with a Liebherr hydraulic oil 37 or higher as standard. In exceptional cases (low-temperature package, bio application), the machine is initially filled with a special hydraulic oil.

Mixing

Note
Mixing rapidly biodegradable third-party ester-based oils with mineral oils may result in damage to the hydraulic system!

Liebherr recommends:
▶ do not mix rapidly biodegradable third-party oils from different manufacturers.

▶ Do not mix rapidly biodegradable third-party oils with mineral oils.

Third-party oils are oils from other manufacturers.

The use of rapidly biodegradable hydraulic oil must be agreed with Liebherr.

Oils on vegetable basis are inadmissible due to the adverse temperature stability.

Using Liebherr hydraulic oils ensures that none of the disadvantages listed above will occur.

LWN/LR.x/V03.01//Auslieferung/2015-06-03/en

copyright by LIEBHERR

Mixing of Liebherr hydraulic oils	
Liebherr mineral oils with each other	Can be mixed at any ratio
Liebherr mineral oils with biodegradable Liebherr oils	Can be mixed at any ratio To ensure biodegradability, mixing in more than 2 % mineral oil is not permitted (in accordance with the regulations in most European countries)
Liebherr oils with oils by other manufacturers	To prevent changing the characteristics of the oils, it is not permitted to mix in more than 10 % oil made by other manufacturers

Tab. 592: Mixing of Liebherr hydraulic oils

9.2.9 Preservation medium (anti-corrosion coating)

WARNING
Incorrect use of anti-corrosion coating agents!

- ▶ When not being used, store the anti-corrosive agent in a cool, dry place (storage temperature approx. 15 °C (59 °F) to 20 °C (68 °F)).
- ▶ Keep container away from naked flames, fire, sparks and other sources of ignition.
- ▶ In the event of a fire, use CO_2 extinguishers, foam or a chemical extinguisher.
- ▶ Do not use water to extinguish the fire under any circumstances!
- ▶ When fighting a fire, wear appropriate safety apparel and breathing apparatus.

Note
Liebherr recommends:

- ▶ Use the following preservatives as anti-corrosive.

Product name	ID no. (batch)	Application	Disposal
DINITROL 3650 DINITROL 3650 is a soft, waxy protective coating with excellent creep characteristics.	890036814 (20 l (5.28 gal))	Use DINITROL 3650 for preservation of layered sheeting. Apply DINITROL 3650 by immersion, brushing or spraying. Seal the preserved parts after a drying time of 24 hours with DINITROL 4010.	Remove protective film with petroleum spirit or similar solvent-containing cleaning agents.
DINITROL 4010 DINITROL 4010 is a hard, waxy protective coating.	890036914 (20 l (5.28 gal))	Apply DINITROL 4010 by brushing or by airless spraying or airmix spraying.	Within 2 weeks of application, the DINITROL 4010 protective film can be removed with petroleum spirit. If left to dry thoroughly for 2 weeks, DINITROL 4010 will resist a high-pressure wash containing alkaline additives.

LWN/LR.x/V03.01//Auslieferung/2015-06-03/en

copyright by LIEBHERR

Product name	ID no. (batch)	Application	Disposal
LPS 1 LPS 1 is a non-greasy lubricant that penetrates deeply, dries quickly and is dirt repellent and dust repellent. As it repels moisture, it is ideal for drying electrical and electronic modules.	861009914 (aerosol can) 861010014 (25 l (6.6 gal))	Use LPS 1 on electrical and electronic systems and control cabinets. The grease-free protective film protects electrical and electronic components and does not cause short-circuits.	The protective film dries out and does not need to be removed.
LPS 2 LPS 2 is a highly stable lubricant that loosens rusted up and stuck components. The non-drying lubricant film provides long-term protection against corrosion.	861009714 (aerosol can) 861009814 (20 l (5.28 gal))	Use LPS 2 for door locks, hinges, joints, etc.	
LPS 3 LPS 3 has extra deep penetration capabilities and repels water. LPS 3 dries to form a transparent, soft, waxy film that provides effective protection against moisture, air, acids, alkaline vapors and other corrosive media.	861009614 (aerosol can) 861009514 (5 l (1.32 gal)) 861009414 (200 l (52.83 gal))	LPS 3 for fittings on pendant straps and back-stay straps, pin connections, etc. LPS 3 only preserves for storage. The preservation must be applied every year. Do not use in the engine compartment.	The protective film dries out and does not need to be removed.
Denso Tape Denso tape is a 1 mm (0.04“ in) thick petrolatum tape. Its web is made of a non-rotting chemical fabric suitable for insulation and seals.	603231914 (roll 50 mm (1.97“ in) x 10 m (32‘ 10“ ft-in)) 693058914 (roll 100 mm (3.94“ in) x 10 m (32‘ 10“ ft-in))	Use Denso tape on exposed piston rods, valves, threaded joints of hydraulic components, etc.	Take off Denso tape and remove any residue with a degreaser or solvent-based cleaner.
CORTEC VCI 368 CORTEC VCI 368 is a drying, film-forming concentrate of highly-effective corrosion inhibitors bound in a mineral-oil based carrier substance. CORTEC VCI 368 does not contain nitrates, phosphates, chromates or heavy metals. It is also PCB and PCT-free.	861008714 (5 l (1.32 gal))	Use CORTEC VCI 368 on pins that are to be driven in again (pinning of boom sections, etc.).	Remove protective film with petroleum or petroleum spirit.

LWN/LR.x/V03.01//Auslieferung/2015-06-03/en

copyright by LIEBHERR

Product name	ID no. (batch)	Application	Disposal
CORTEC VCI 369 CORTEC VCI 369 is a semi-fluid grease concentrate made of highly-effective corrosion inhibitors bound in a mineral oil based carrier substance. CORTEC VCI 369 does not contain solvents, nitrites, phosphates or chromates, PCB and PCT.	11262917 (400 ml (13.53 oz) aerosol can) 861008614 (5 l (1.32 gal) can)	Apply CORTEC VCI 369 by brushing, rolling or spraying. Use CORTEC VCI 369 for piston rods of the hydraulic cylinder.	Remove protective film with petroleum or petroleum spirit.

Tab. 593: Preservation medium (corrosion protection)

Note
Liebherr recommends:

▶ Order the different preservatives directly from Liebherr using the ID number.

First-aid measures when coming into contact with DINITROL:
– Skin contact: Rinse with clear water and soap.
– Eye contact: Rinse corrosion protection medium immediately with clear water for some minutes. Contact a physician immediately.
– Ingestion: Drink milk or water. Do not induce vomiting. Contact a physician immediately.
– Inhalation: Go outside, breathe fresh air. Contact a physician immediately.

9.2.10 Liebherr oil diagnosis system

Note

▶ Perform the first oil change for the relevant unit as scheduled, since increased levels of contamination are to be expected during the running-in phase.

The Liebherr oil diagnosis system is a preventive maintenance system for the machine's main components.

The Liebherr oil diagnosis system is based on oil analyses and has the following tasks:
– Prevent machine breakdowns.
– Reduce standstills and downtimes.
– Minimize repair costs.
– Indicate abnormal wear.
– Detect possible causes of damage early.

Taking an oil sample

Ensure that the following conditions are fulfilled:
❑ Liebherr oil analysis set (ID no. 885601814) is available.
❑ The machine is switched off.
❑ The machine is secured to prevent unauthorised operation.
❑ The respective module or component has warmed up for 15 minutes (operating temperature).

LWN/LR.x/V03.01//Auslieferung/2015-06-03/en

copyright by LIEBHERR

The oil samples are taken either directly out of the housing of the respective module or component or from the draining oil when performing an oil change. Prior to sampling, drain at least 250 ml (8.45 oz) oil before filling the container with thoroughly mixed oil.

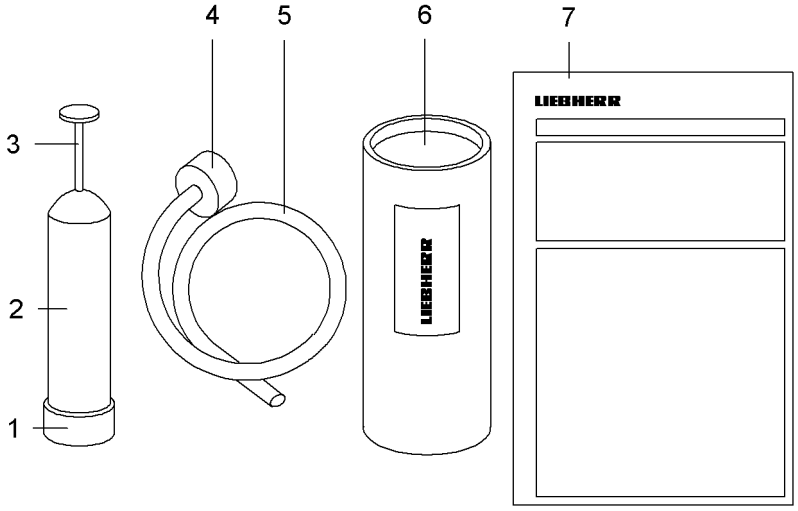

Fig. 5709: Liebherr oil analysis set (ID no. 885601814)

1	Cover syringe container	**5**	Polymer hose
2	Syringe container	**6**	Shipping carton
3	Syringe neck	**7**	Sample data sheet
4	Adapter		

▶ Screw polymer hose **5** with adapter **4** onto syringe container **2**.

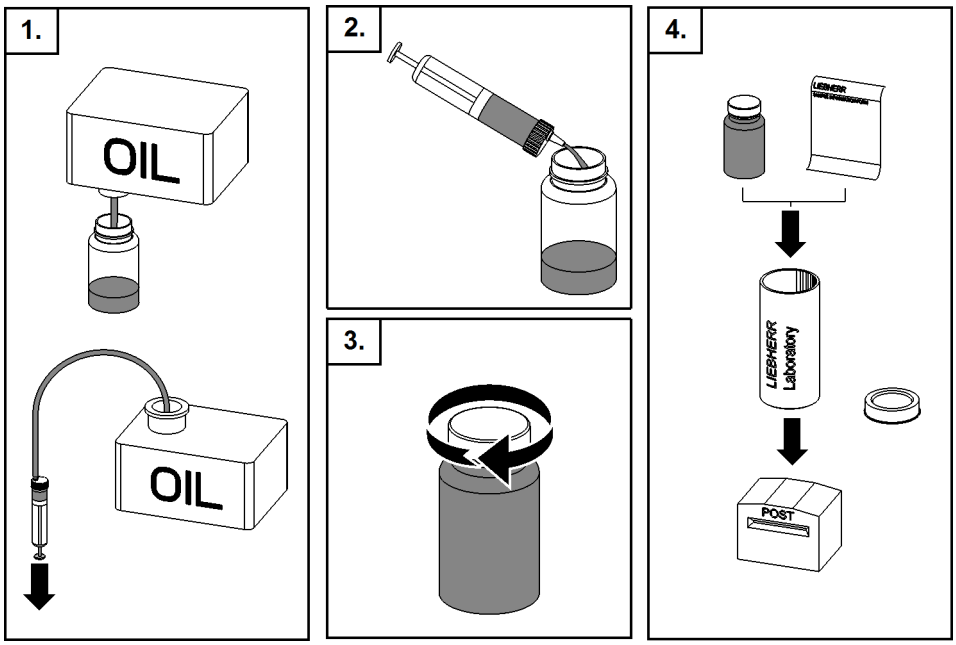

Fig. 5710: Taking an oil sample

▶ Take at least 200 ml (6.76 oz) of oil.

LWN/LR.x/V03.01//Auslieferung/2015-06-03/en

copyright by
LIEBHERR

- Complete all sections of the sample data sheet.
- Place the oil sample and the sample data sheet into the shipping carton and send to the pre-printed address.

Understanding the oil diagnosis report

The oil diagnosis report shows the detailed result of the oil sample analysis and provides information about the measures to be taken. Four different symbols are used for this purpose:

Symbol	Meaning
	Normal
	High values, take second oil sample for counter-check
	Oil change required
	Repair required

Tab. 594: Oil diagnosis report

LWN/LR.x/V03.01//Auslieferung/2015-06-03/en

copyright by
LIEBHERR

9.3 Implementation instructions for the maintenance

WARNING
Unauthorized dwelling in the working zone and the danger zone while the machine is running!
Death, risk of crushing limbs.

- ▶ Ensure that the machine operator is located in the cabin while the machine is running.
- ▶ Perform work on the machine with visual contact and radio contact to the machine operator.

WARNING
Improper maintenance of machine!
Death, grave injury.

If work on the machine is performed without the machine operator:
- ▶ Switch off the battery main switch.

If work is performed on electrical systems or if extensive maintenance work has to be performed:
- ▶ Switch off the battery main switch.

LWN/LR.x/V03.01//Auslieferung/2015-06-03/en

copyright by
LIEBHERR

9.4 Air filter system

9.4.1 Checking the negative pressure indicator

Ensure that the following conditions are fulfilled:
- ❑ Negative pressure sensor on air intake has a tight fit.
- ❑ Negative pressure sensor on air intake is correctly connected.

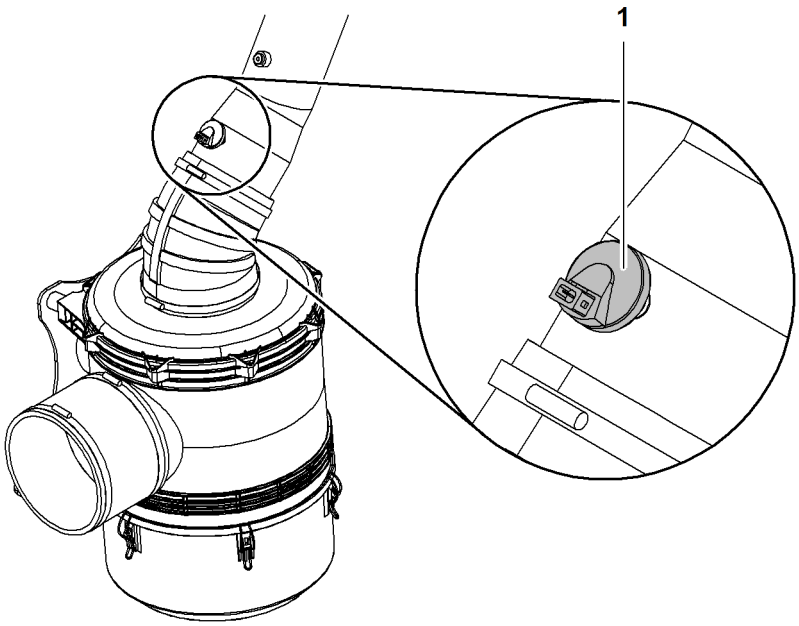

Fig. 5715: Checking the negative pressure indicator

1 Negative pressure sensor

▶ Press the *Error messages* button on the monitor.
  ▷ The *Error messages* screen appears on the monitor.

▶ Unplug negative pressure sensor **1**.
  ▷ Error message “Air filter dirty” appears on the *Error messages* screen.

If the error message “Air filter dirty” does not appear on the screen *Error messages*:
▶ Contact Liebherr customer service.

LWN/LR.x/V03.01//Auslieferung/2015-06-03/en

copyright by
LIEBHERR

9.4.2 Cleaning the air filter dust ejector

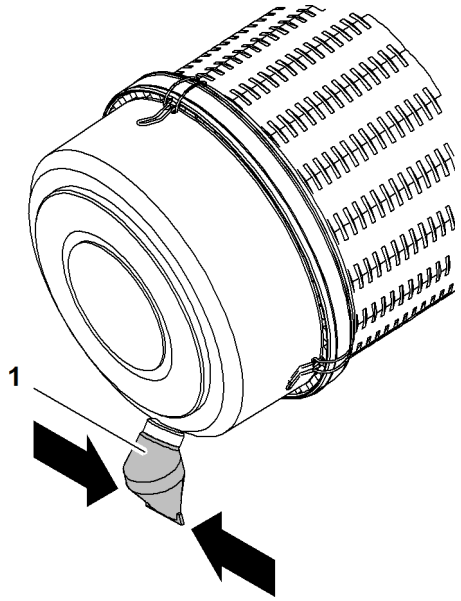

Fig. 5717: Cleaning the air filter dust ejector

1 Dust ejector

▶ Press the dust valve **1** together on the side.

9.4.3 Replacing the dry air filter main element and dry air filter safety element

NOTICE
Inadmissible operation without dry air filter elements!
Damage to the diesel engine.

▶ Only operate diesel engine with installed dry air filter main element and dry air filter safety element.

NOTICE
Inadmissible cleaning of dry air filter elements!
Damage to the diesel engine.

▶ Do not clean dry air filter main element and dry air filter safety element.

WARNING
Fine dust!
Risk of damage to lungs.

▶ To protect the respiratory tract: wear fine dust mask.

LWN/LR.x/V03.01//Auslieferung/2015-06-03/en

copyright by
LIEBHERR

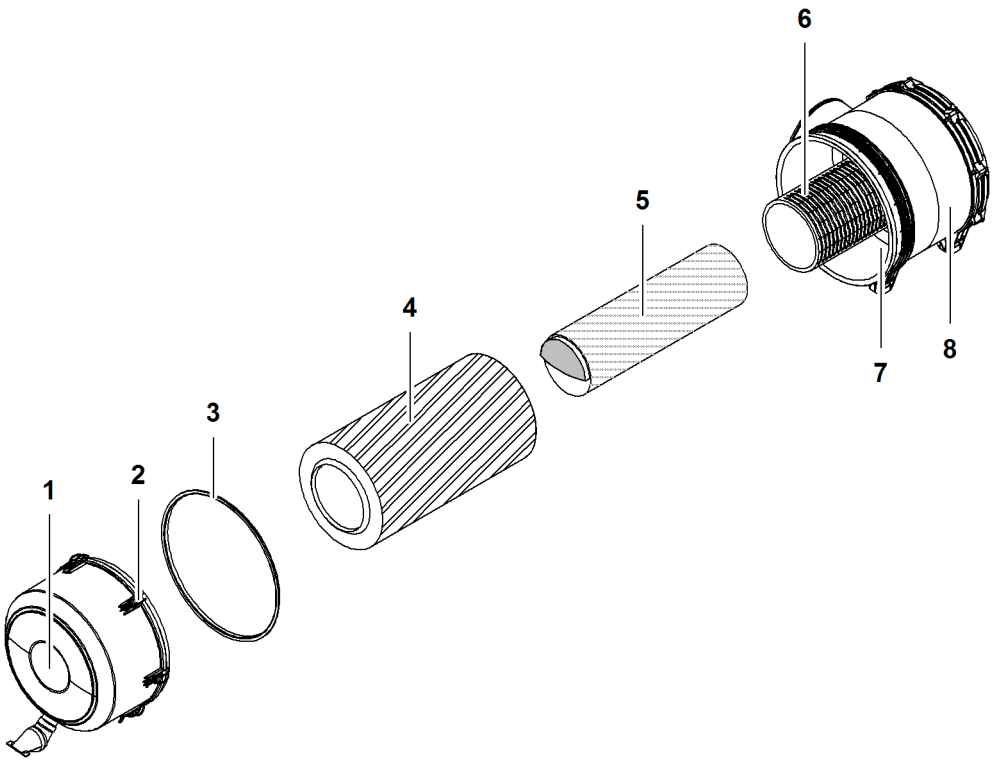

Fig. 5718: Replacing the dry air filter main element and dry air filter safety element

1	Cover	**5**	Dry air filter safety element
2	Clamp (6x)	**6**	Bracket for dry air filter safety element
3	Seal	**7**	Bracket for dry air filter main element
4	Dry air filter main element	**8**	Air filter housing

- ▶ Undo clamps **2** of the cover **1**.
- ▶ Remove cover **1** of air filter housing **8**.
- ▶ Turn dry air filter main element **4** and pull out at the same time.
- ▶ Pull out dry air filter safety element **5**.

Note
Environmental pollution!

- ▶ Dispose of dry air filter elements in accordance with national and international guidelines and regulations.

- ▶ Insert new dry air filter safety element **5** into bracket **6**.
- ▶ Insert new dry air filter main element **4** into bracket **7**.
- ▶ Put cover **1** on air filter housing **8**.
- ▶ Close clamps **2** of cover **1**.

LWN/LR.x/V03.01//Auslieferung/2015-06-03/en

copyright by
LIEBHERR

9.5 Distributor gearbox

9.5.1 Checking the gearbox oil level

Ensure that the following conditions are fulfilled:
- ❑ Diesel engine has been switched off for five minutes.
- ❑ The machine is level.
- ❑ The machine is secured to prevent unauthorised operation.

CAUTION
Hot gearbox components and gearbox oil!
Risk of burns.

▶ Maintenance work and inspection work must only be carried out when the distribution gearbox is switched off and the diesel engine has cooled down.

▶ Wear protective equipment.

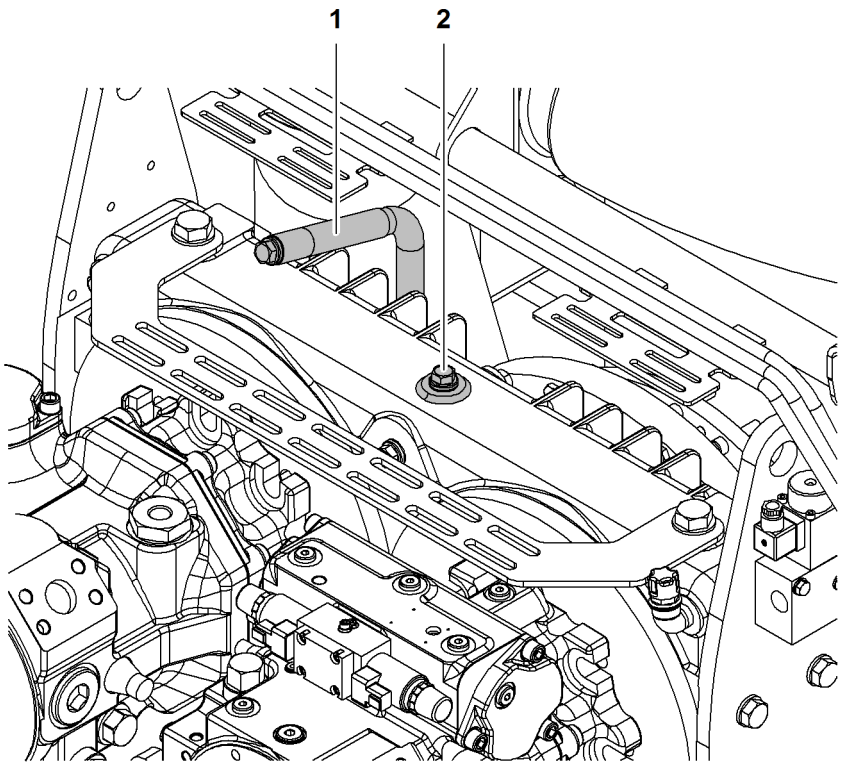

Fig. 5719: Checking the gearbox oil level

1 Oil dipstick **2** Filler neck

▶ Pull out the oil dipstick **1**, clean it, and reinsert it as far as it will go.

▶ Pull out the oil dipstick **1** again and check the oil level.

If the gearbox oil level is below the MIN mark:
▶ Top up using the appropriate gearbox oil according to the lubrication chart (For more information see: 9.5.2 Topping up the gearbox oil, page 1817) .

If the gearbox oil level is above the MAX mark:
▶ Drain the gearbox oil.

LWN/LR.x/V03.01//Auslieferung/2015-06-03/en

copyright by LIEBHERR

9.5.2 Topping up the gearbox oil

Ensure that the following conditions are fulfilled:
- ❑ Diesel engine has been switched off for five minutes.
- ❑ The machine is level.
- ❑ The machine is secured to prevent unauthorised operation.

CAUTION
Hot gearbox components and gearbox oil!
Risk of burns.

▶ Maintenance work and inspection work must only be carried out when the distribution gearbox is switched off and the diesel engine has cooled down.

▶ Wear protective equipment.

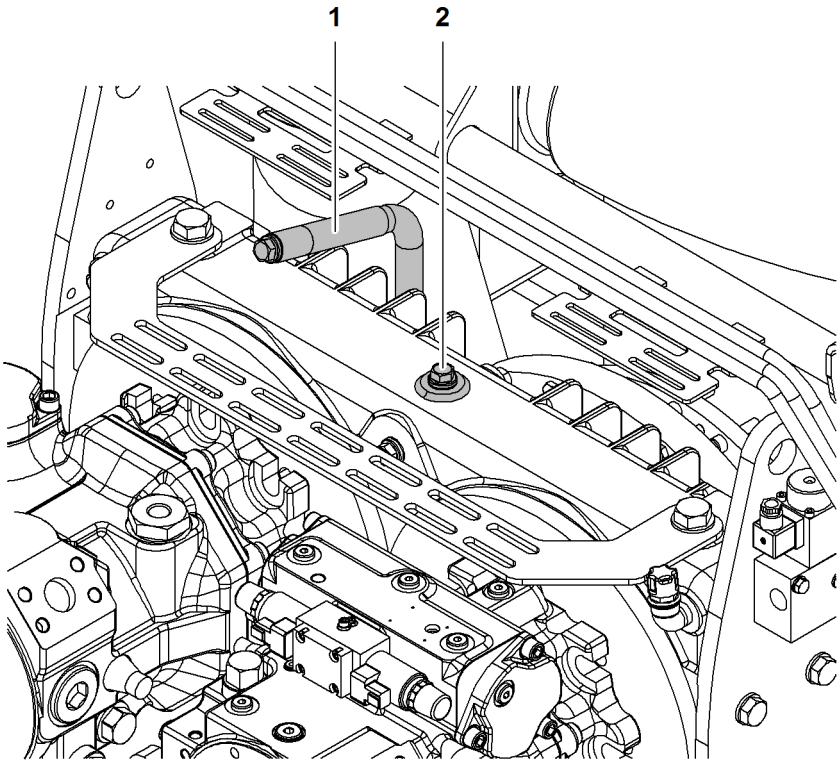

Fig. 5720: Topping up gearbox oil

1 Oil dipstick **2** Filler neck

NOTICE
Dirt and foreign bodies in the distributor gearbox!
The distributor gearbox is liable to be damaged.

▶ Ensure that no dirt or foreign bodies enter the filler neck **2**.

▶ Undo the filler neck **2** screw.

LWN/LR.x/V03.01//Auslieferung/2015-06-03/en

copyright by LIEBHERR

NOTICE
Incorrect or contaminated gearbox oil!
The distributor gearbox is liable to be damaged.

- ▶ Top up exclusively using the appropriate gearbox oil according to the lubrication chart (For more information see: 9.2.3 Lubrication chart, page 1802) .
- ▶ Check the purity of the gearbox oil.

- ▶ Top up the gearbox oil until the MAX mark.
- ▶ Refit and tighten the filler neck **2** screw.
- ▶ Start the diesel engine and allow it to idle for 10 minutes.
- ▶ Switch off the diesel engine and wait 1 minute before checking the gearbox oil level again.

9.5.3 Checking the venting valve

- ▶ Check the venting valve.

If the venting valve is faulty in any way:
- ▶ Contact Liebherr after sales service.

LWN/LR.x/V03.01//Auslieferung/2015-06-03/en

copyright by
LIEBHERR

9.6 Swing

9.6.1 Checking the gearbox oil level

Ensure that the following conditions are fulfilled:
- ❑ Diesel engine has been switched off for five minutes.
- ❑ The machine is level.
- ❑ The machine is secured to prevent unauthorised operation.

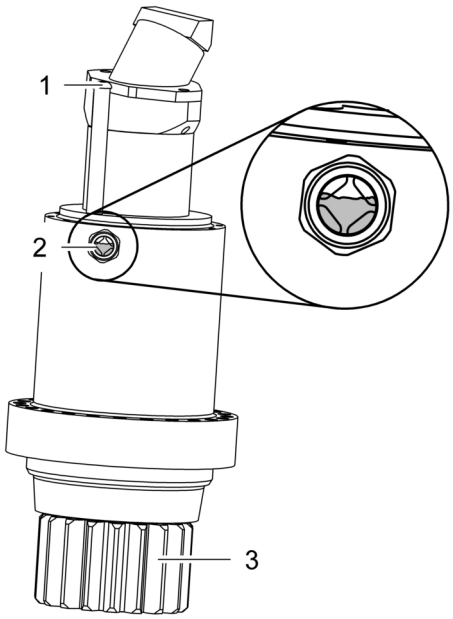

Fig. 5721: Checking the gearbox oil level

1	Filler neck	**3**	Pinion
2	Sight glass		

▶ Check the gearbox oil level in the sight glass **2**.

If no gearbox oil is visible in the sight glass:
▶ Top up using appropriate gearbox oil in accordance with the lubrication chart (For more information see: 9.6.2 Topping up the gearbox oil, page 1819) .

9.6.2 Topping up the gearbox oil

Ensure that the following conditions are fulfilled:
- ❑ Diesel engine has been switched off for five minutes.
- ❑ The machine is level.
- ❑ The machine is secured to prevent unauthorised operation.

NOTICE
Dirt and foreign bodies in the swing gear!
Damage to the swing gear.

▶ Ensure that no dirt or foreign bodies enter the filler neck.

▶ Open the cover: turn the cover counter-clockwise.

LWN/LR.x/V03.01//Auslieferung/2015-06-03/en

copyright by
LIEBHERR

NOTICE
Incorrect or contaminated gearbox oil!
Damage to the swing gear.

- Top up using only the appropriate gearbox oil according to the lubrication chart (For more information see: 9.2.3 Lubrication chart, page 1802) .
- Check the purity of the gearbox oil.

- Top up the gearbox oil up to halfway on the sight glass.
- Close the cover: turn the cover clockwise as far as it will go.
- Start the diesel engine and allow it to idle for 10 minutes.
- Move the swing in both directions.
- Switch off the diesel engine and wait 1 minute before checking the gearbox oil level again.

LWN/LR.x/V03.01//Auslieferung/2015-06-03/en

copyright by
LIEBHERR

9.7 Swing connection

9.7.1 Lubricating external teeth

Ensure that the following conditions are fulfilled:
- ❑ The grease gun from the Liebherr tool kit is present and filled with grease (For more information see: 9.2.3 Lubrication chart, page 1802) .
- ❑ The machine is secured to prevent unauthorised operation.

If the swing external teeth are not lubricated by a central lubrication:
- ▶ Lubricate the outer swing teeth using the requisite grease or alternatively apply an even coating of graphite spray (For more information see: 9.2.3 Lubrication chart, page 1802) .

9.7.2 Lubricating the bearing races via the central lubrication point

Ensure that the following conditions are fulfilled:
- ❑ The grease gun from the Liebherr tool kit is present and filled with grease (For more information see: 9.2.3 Lubrication chart, page 1802) .
- ❑ The machine is secured to prevent unauthorised operation.

CAUTION
Rotating uppercarriage!
Crushing.

- ▶ Ensure that nobody enters the danger area during the lubrication process.
- ▶ Leave the danger area.

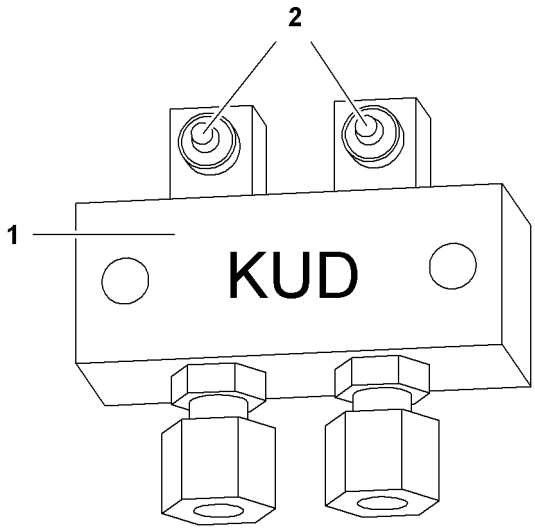

Fig. 5722: Central lubrication point

1 Central lubrication point **2** Grease nipple

If the swing bearing races are not lubricated by a central lubrication:
- ▶ Use the grease gun to press grease into the grease nipple **2**.

LWN/LR.x/V03.01//Auslieferung/2015-06-03/en

copyright by LIEBHERR

▶ Turn the uppercarriage by 45° after each lubrication process (per grease nipple):
  ▷ the grease distributes itself better in the swing ring.

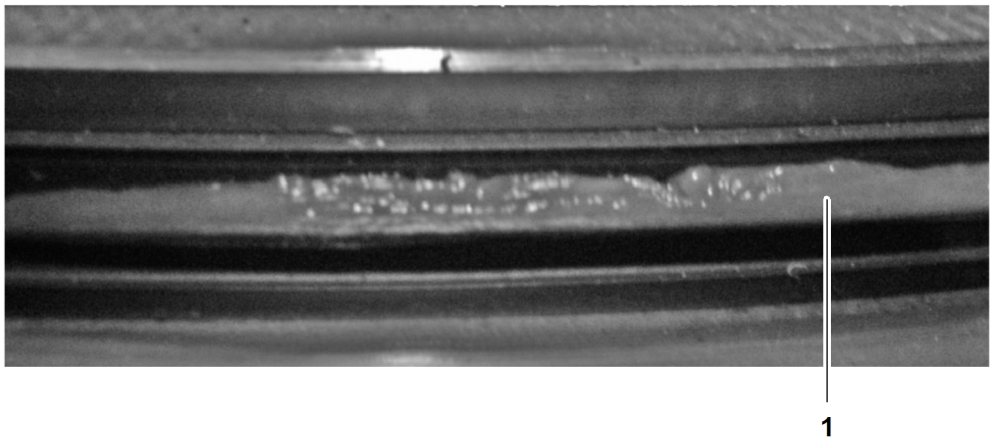

Fig. 5723: Grease collar

▶ Press in grease until a grease collar **1** can be seen up to the whole seal lip of the swing connection (circumference).

LWN/LR.x/V03.01//Auslieferung/2015-06-03/en

copyright by
LIEBHERR

9.8 winch1/winch2

9.8.1 Checking the gearbox oil level

Ensure that the following conditions are fulfilled:
- ❑ Diesel engine has been switched off for five minutes.
- ❑ The machine is level.
- ❑ The machine is secured to prevent unauthorised operation.

CAUTION
Hot winch components and hot gearbox oil!
Risk of burns.

▶ Maintenance work and inspection work on the winches may only be carried out when the machine is switched off and has cooled down.

▶ Wear protective equipment.

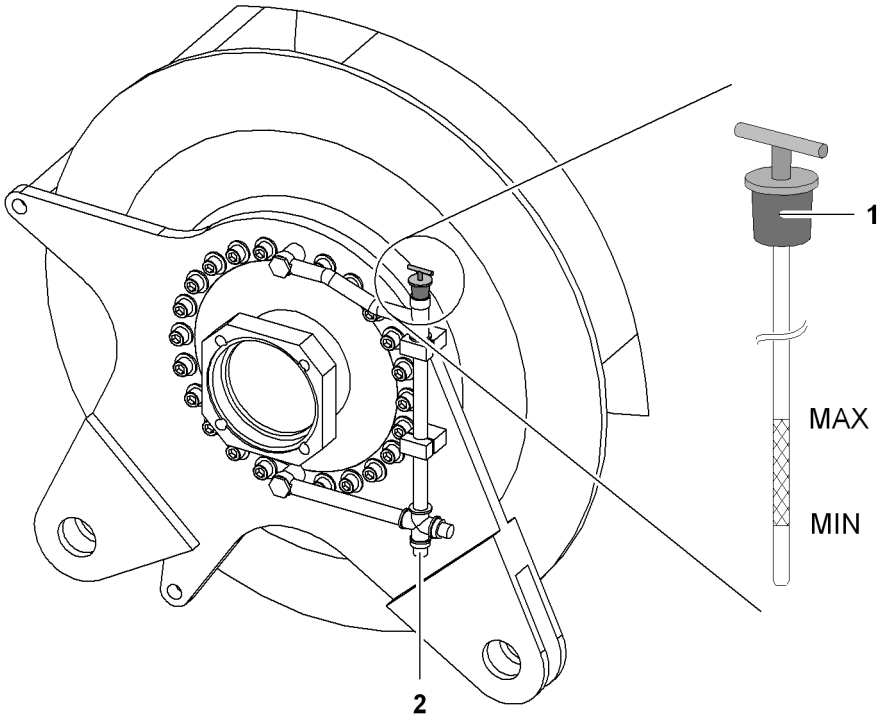

Fig. 5724: winch1/winch2

1 Oil dipstick **2** Oil drain screw

▶ Pull out the oil dipstick **1**, clean it, and reinsert it as far as it will go.

▶ Pull out the oil dipstick **1** again and check the gearbox oil level.

If the gearbox oil level is below the MIN mark:
▶ Top up using the appropriate gearbox oil according to the lubrication chart (For more information see: 9.8.2 Topping up the gearbox oil, page 1824) .

If the gearbox oil level is above the MAX mark:
▶ Drain the gearbox oil using the oil drain screw **2**.

LWN/LR.x/V03.01//Auslieferung/2015-06-03/en

copyright by
LIEBHERR

9.8.2 Topping up the gearbox oil

Ensure that the following conditions are fulfilled:
- ❑ Diesel engine has been switched off for five minutes.
- ❑ The machine is level.
- ❑ The machine is secured to prevent unauthorised operation.

CAUTION
Hot winch components and hot gearbox oil!
Burns and open wounds.

- ▶ Maintenance work and inspection work on the winches may only be carried out when the machine is switched off and has cooled down.
- ▶ Wear protective equipment.

NOTICE
Dirt and foreign bodies in winch gearbox!
The winch gearbox will be damaged.

- ▶ Ensure that no dirt or foreign bodies enter the filler neck.

- ▶ Pull out the oil dipstick.

NOTICE
Incorrect or contaminated gearbox oil!
The winch gearbox will be damaged.

- ▶ Top up using only the appropriate gearbox oil according to the lubrication chart (For more information see: 9.2.3 Lubrication chart, page 1802) .
- ▶ Check the purity of the gearbox oil.

- ▶ Top up the gearbox oil until the MAX mark.
- ▶ Reinsert the oil dipstick as far as it will go.
- ▶ Start the diesel engine and allow it to idle for 10 minutes.
- ▶ Move the winch in both directions at low speed.
- ▶ Switch off the diesel engine and wait 1 minute before checking the gearbox oil level again.

9.8.3 Lubricating the counter bearing

Ensure that the following conditions are fulfilled:
- ❑ The grease gun from the Liebherr tool kit is present and filled with grease (For more information see: 9.2.3 Lubrication chart, page 1802) .
- ❑ The machine is level.
- ❑ The machine is secured to prevent unauthorised operation.

LWN/LR.x/V03.01//Auslieferung/2015-06-03/en

copyright by
LIEBHERR

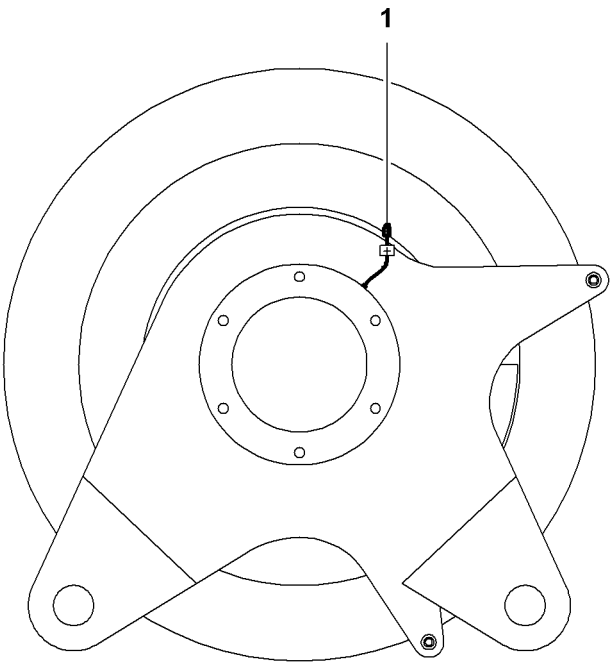

Fig. 5725: Lubricating the counter bearing

1 Grease nipple

▶ Use the grease gun to press grease into the grease nipple **1**.

▶ Slowly turn the winch.
▷ The grease distributes itself throughout the winch counter bearing.

9.8.4 Checking the rope end fastening for tight fit

▶ Check the rope end fastening for tight fit.

If the rope end fastening is loose:
▶ Tighten the rope end fastening.

LWN/LR.x/V03.01//Auslieferung/2015-06-03/en

copyright by
LIEBHERR

9.9 Boom luffing winches

9.9.1 Checking the gearbox oil level

Ensure that the following conditions are fulfilled:
- ❑ Diesel engine has been switched off for five minutes.
- ❑ The machine is level.
- ❑ The machine is secured to prevent unauthorised operation.

CAUTION
Hot winch components and hot gearbox oil!
Risk of burns.

▶ Maintenance work and inspection work on the winches may only be carried out when the machine is switched off and has cooled down.

▶ Wear protective equipment.

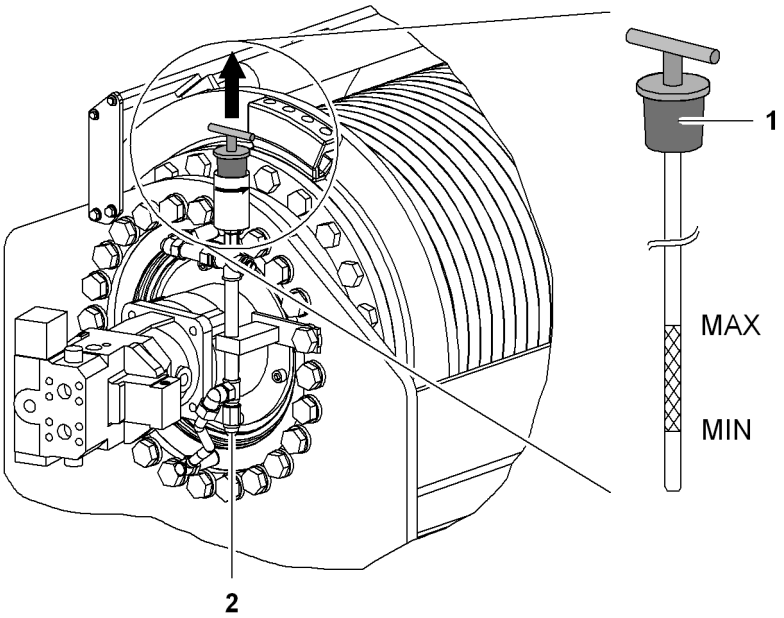

Fig. 5726: boom luffing winch

1 Oil dipstick **2** Oil drain screw

▶ Pull out the oil dipstick **1**, clean it, and reinsert it as far as it will go.

▶ Pull out the oil dipstick **1** again and check the gearbox oil level.

If the gearbox oil level is below the MIN mark:
▶ Top up using the appropriate gearbox oil according to the lubrication chart (For more information see: 9.9.2 Topping up the gearbox oil, page 1827) .

If the gearbox oil level is above the MAX mark:
▶ Drain the gearbox oil using the oil drain screw **2**.

LWN/LR.x/V03.01//Auslieferung/2015-06-03/en

copyright by LIEBHERR

9.9.2 Topping up the gearbox oil

Ensure that the following conditions are fulfilled:
- ❑ Diesel engine has been switched off for five minutes.
- ❑ The machine is level.
- ❑ The machine is secured to prevent unauthorised operation.

CAUTION
Hot winch components and hot gearbox oil!
Risk of burns.

▶ Maintenance work and inspection work on the winches may only be carried out when the machine is switched off and has cooled down.

▶ Wear protective equipment.

NOTICE
Dirt and foreign bodies in winch gearbox!
The winch gearbox will be damaged.

▶ Ensure that no dirt or foreign bodies enter the filler neck.

▶ Pull out the oil dipstick.

NOTICE
Incorrect or impure gearbox oil is used!
The winch gearbox will be damaged.

▶ Top up using only the appropriate gearbox oil according to the lubrication chart (For more information see: 9.2.3 Lubrication chart, page 1802) .

▶ Check the purity of the gearbox oil.

▶ Top up the gearbox oil until the MAX mark.

▶ Reinsert the oil dipstick as far as it will go.

▶ Start the diesel engine and allow it to idle for 10 minutes.

▶ Move the winch in both directions at low speed.

▶ Switch off the diesel engine and wait 1 minute before checking the gearbox oil level again.

9.9.3 Lubricating the counter bearing

Ensure that the following conditions are fulfilled:
- ❑ The grease gun from the Liebherr tool kit is present and filled with grease (For more information see: 9.2.3 Lubrication chart, page 1802) .
- ❑ The machine is level.
- ❑ The machine is secured to prevent unauthorised operation.

LWN/LR.x/V03.01//Auslieferung/2015-06-03/en

copyright by LIEBHERR

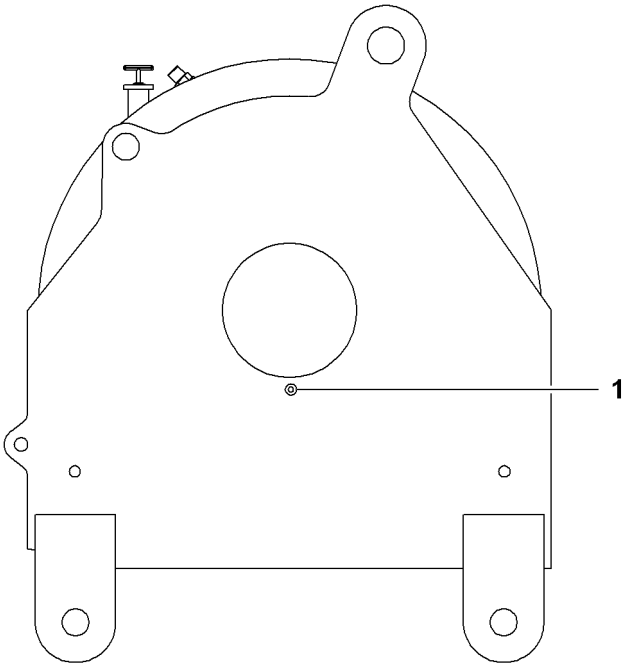

Fig. 5727: Lubricating the counter bearing

1 Grease nipple

▶ Use the grease gun to press grease into the grease nipple **1**.

▶ Slowly turn the winch.
▷ The grease distributes itself throughout the winch counter bearing.

9.9.4 Checking the rope end fastening for tight fit

▶ Check the rope end fastening for tight fit.

If the rope end fastening is loose:
▶ Tighten the rope end fastening.

LWN/LR.x/V03.01//Auslieferung/2015-06-03/en

copyright by
LIEBHERR

9.10 Rope reeving winch

9.10.1 Lubricating the counter bearing

Ensure that the following conditions are fulfilled:
- ❑ The grease gun from the Liebherr tool kit is present and filled with grease (For more information see: 9.2.3 Lubrication chart, page 1802) .
- ❑ Rope reeving winch is level.
- ❑ The machine is secured to prevent unauthorised operation.

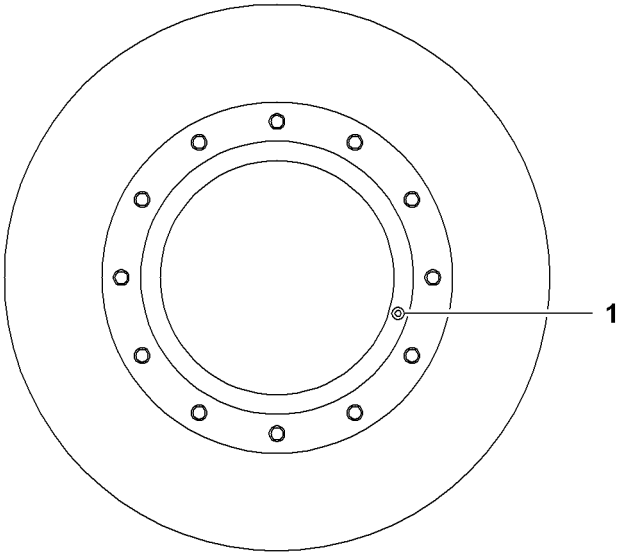

Fig. 5728: Lubricating the counter bearing

1 Grease nipple

▶ Use the grease gun to press grease into the grease nipple **1**.

▶ Slowly turn the winch.
▷ The grease distributes itself throughout the winch counter bearing.

9.10.2 Checking rope end attachment for tight fit when starting up rope reeving winch

▶ Check the rope end fastening for tight fit.

If the rope end fastening is loose:
▶ Tighten the rope end fastening.

LWN/LR.x/V03.01//Auslieferung/2015-06-03/en

copyright by LIEBHERR

9.11 Tagline winch

9.11.1 Checking the gearbox oil level

Ensure that the following conditions are fulfilled:
- ❑ Diesel engine has been switched off for five minutes.
- ❑ The tagline winch is level.
- ❑ The machine is secured to prevent unauthorised operation.

CAUTION
Hot winch components and hot gearbox oil!
Risk of burns.

▶ Only perform maintenance work and inspection work on winches when the machine is switched off and has cooled down.

▶ Wear protective equipment.

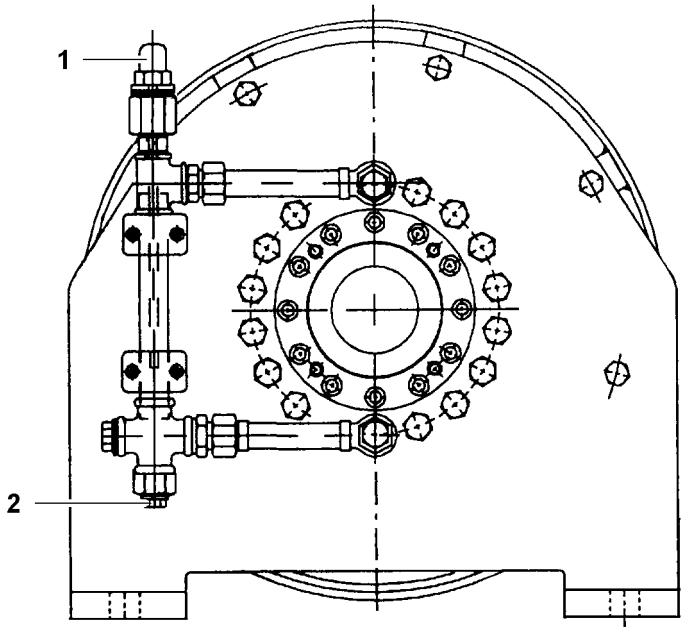

Fig. 5729: Checking the gearbox oil level

1 Oil dipstick **2** Drain plug

▶ Pull out the oil dipstick **1**, clean it, and reinsert it as far as it will go.

▶ Pull out the oil dipstick **1** again and check the gearbox oil level.

If the gearbox oil level is below the MIN mark:
▶ Top up using the appropriate gearbox oil according to the lubrication chart (For more information see: 9.11.2 Topping up the gearbox oil, page 1831) .

If the gearbox oil level is above the MAX mark:
▶ Drain the gearbox oil using the drainage screw **2**.

LWN/LR.x/V03.01//Auslieferung/2015-06-03/en

copyright by
LIEBHERR

9.11.2 Topping up the gearbox oil

Ensure that the following conditions are fulfilled:
- ❑ Diesel engine has been switched off for five minutes.
- ❑ The tagline winch is level.
- ❑ The machine is secured to prevent unauthorised operation.

CAUTION
Hot winch components and hot gearbox oil!
Risk of burns.

▶ Only perform maintenance work and inspection work on winches when the machine is switched off and has cooled down.

▶ Wear protective equipment.

NOTICE
Dirt and foreign bodies in winch gearbox!
The winch gearbox will be damaged.

▶ Ensure that no dirt or foreign bodies enter the filler neck.

▶ Pull out the oil dipstick.

NOTICE
Incorrect or impure gearbox oil is used!
The winch gearbox will be damaged.

▶ Top up using only the appropriate gearbox oil according to the lubrication chart (For more information see: 9.2.3 Lubrication chart, page 1802) .

▶ Check the purity of the gearbox oil.

▶ Top up the gearbox oil until the MAX mark.

▶ Reinsert the oil dipstick as far as it will go.

▶ Start the diesel engine and allow it to idle for 10 minutes.

▶ Move the winch in both directions at low speed.

▶ Switch off the diesel engine and wait 1 minute before checking the gearbox oil level again.

9.11.3 Lubricating the rope bracket on the boom base section and checking pulleys for damage

Ensure that grease gun from Liebherr tool kit is available and filled with correct grease (For more information see: 9.2.3 Lubrication chart, page 1802) .

LWN/LR.x/V03.01//Auslieferung/2015-06-03/en

copyright by
LIEBHERR

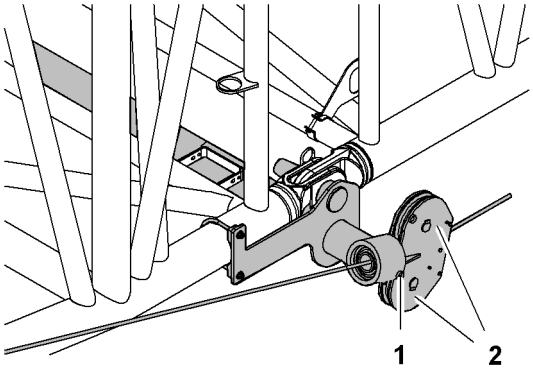

Fig. 5730: Lubricate rope bracket on main boom base section and check pulleys for damage

1 Grease nipple **2** Pulley (2x)

▶ Use the grease gun to press grease into the grease nipple **1**.

▶ Check pulleys **2** for damage and wear

9.11.4 Checking the rope end fastening for tight fit

▶ Check the rope end fastening for tight fit.

If the rope end fastening is loose:
▶ Tighten the rope end fastening.

LWN/LR.x/V03.01//Auslieferung/2015-06-03/en

copyright by
LIEBHERR

9.12 Crawlers

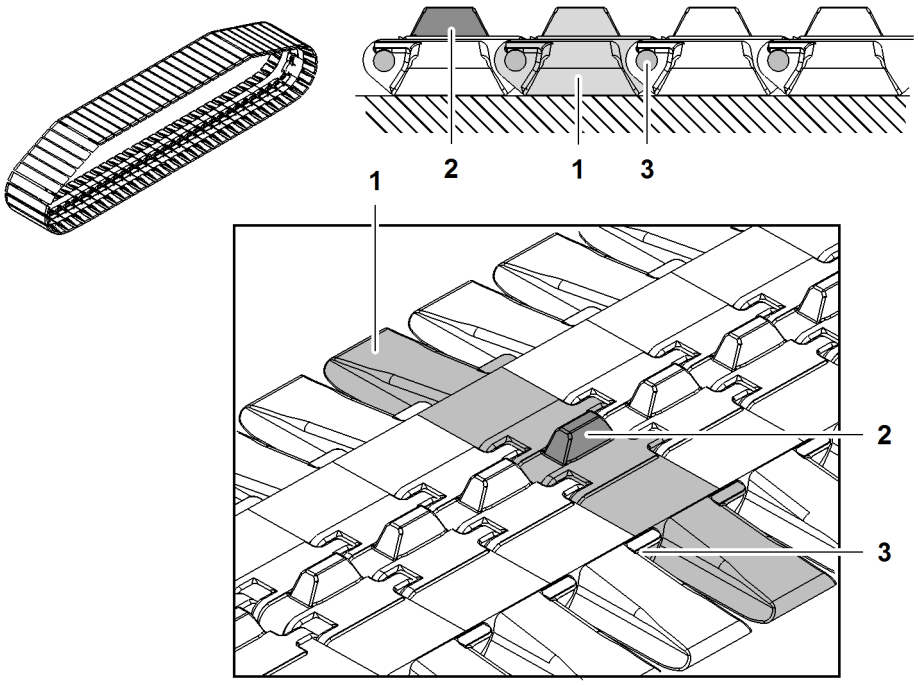

Fig. 5731: Track pad crawler

1 Base plate
2 Guide
3 Pin connection

With the track pad crawler, the individual base plates **1** of the crawler are pinned with each other. The crawler is guided with the guides **2** on the base plates.

9.12.1 Checking the gearbox oil level

Ensure that the following conditions are fulfilled:
- ❑ Inspection lamp is available.
- ❑ Allen key from the Liebherr tool kit is available.
- ❑ Torque wrench 120 Nm (89 ft-lb) is available.
- ❑ Diesel engine has been switched off for five minutes.
- ❑ The machine is level.
- ❑ The machine is secured to prevent unauthorised operation.
- ❑ The Liebherr lettering on the crawler drives is horizontally readable from left to right.

CAUTION
Hot gearbox components and hot gearbox oil!
Risk of burns.

▶ Maintenance work and inspection work on the crawlers must only be carried out when the machine is switched off and has cooled down.

▶ Wear protective equipment.

LWN/LR.x/V03.01//Auslieferung/2015-06-03/en

copyright by
LIEBHERR

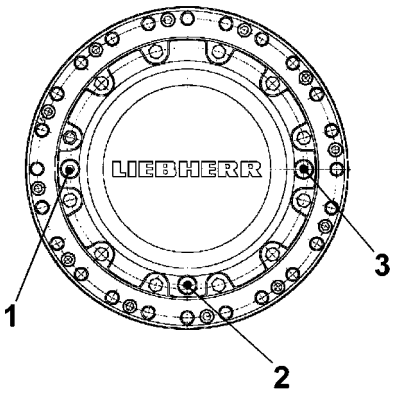

Fig. 5732: Crawler drive

1 Dummy socket (internal hexagon) **3** Dummy socket (internal hexagon)
2 Drain screw (internal hexagon)

▶ Undo the dummy socket **1** using the Allen key.

▶ Check the gearbox oil level .

If the gearbox oil level does not reach the bottom edge of the opening:
▶ Top up with suitable gearbox oil.

▶ Tighten the dummy socket **1** with a torque of 120 Nm (89 ft-lb).

9.12.2 Check gearbox and hydraulic connections for leaks

▶ Check gearbox and hydraulic connections for leaks.

If the gearbox or the hydraulic connections are leaking:
▶ Do not use the crawlers.

▶ Contact Liebherr after sales service.

9.12.3 Cleaning the crawlers

NOTICE
Dirt in the crawlers!
Wear due to increased chain tension.

▶ Ensure the crawlers are kept clean.

▶ Only use authorised cleaning agents.

▶ Clean the crawlers using a high-pressure cleaner.

LWN/LR.x/V03.01//Auslieferung/2015-06-03/en

copyright by
LIEBHERR

9.12.4 Checking that the crossbeam set screws on the crawler side frames are secure on telescopic undercarriages

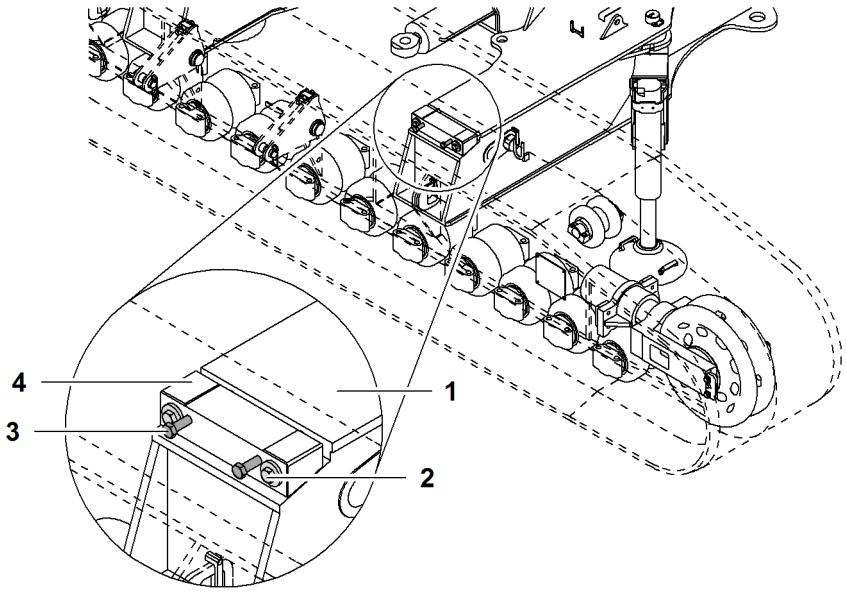

Fig. 5733: Locking screws of the struts on the crawler side frames

1	Strut	**3**	Screw (2x)
2	Locking screw (2x)	**4**	Wedge

▶ Check locking screws **2** of the struts on the crawler side frames for tight fit.

If locking screws **2** of the struts on the crawler side frames are loose:

▶ Undo screws **3**.

▶ Tighten locking screw **2**.

▶ Tighten screws **3**.

LWN/LR.x/V03.01//Auslieferung/2015-06-03/en

copyright by
LIEBHERR

9.12.5 Checking the chain tension

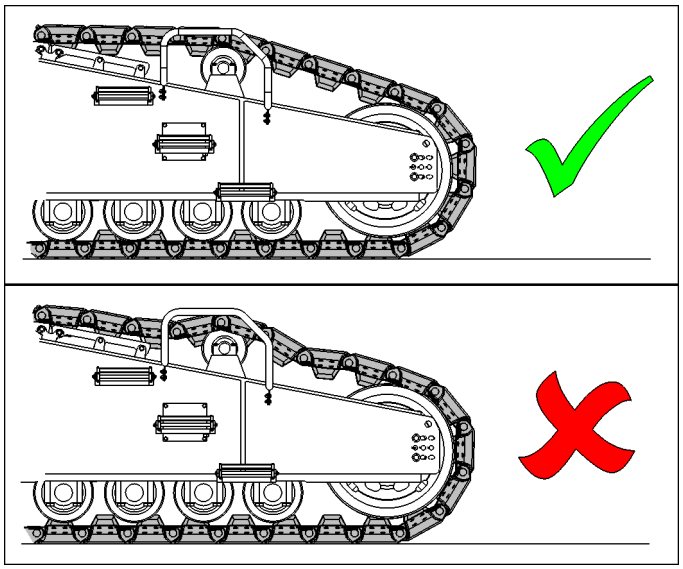

Fig. 5734: Inadmissible chain tension

NOTICE
Incorrect chain tension!
Wear or tearing of the chain.

▶ Make sure that no chain link scrapes on the steel construction of the crawler side frame.

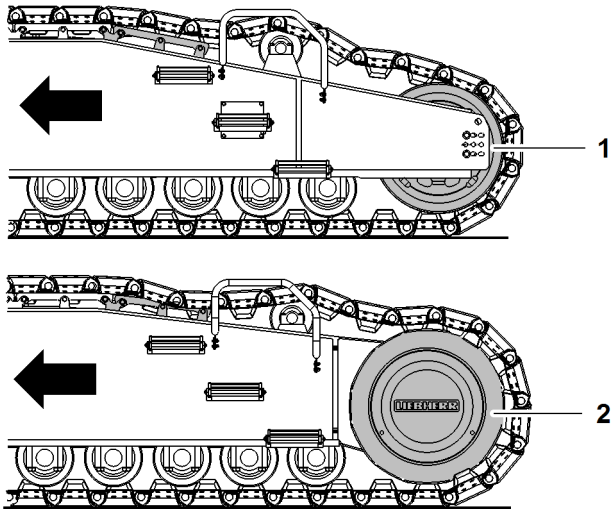

Fig. 5735: Relieving the chain

1 Idler wheel **2** Tumbler

When travelling forward with the machine, the rear chain in the top section of the crawler side frame relaxes.

▶ Move machine one crawler side frame length forward.
▷ Chain relieved.

LWN/LR.x/V03.01//Auslieferung/2015-06-03/en

CAUTION
Inadmissible operation of the travel gear!
Risk of crushing limbs.

▶ Make sure that the safety lever in the cabin is pulled up.

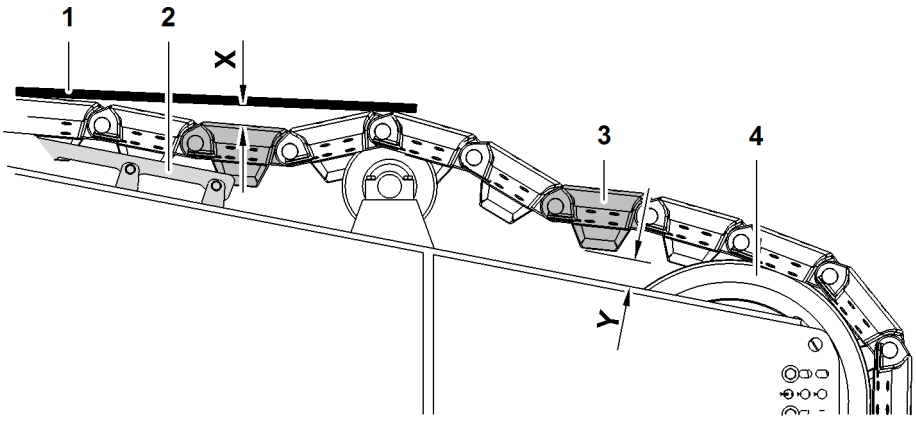

Fig. 5736: Checking the chain tension

1	Measuring rod	**4**	Idler wheel
2	Chain guide	**X**	Distance
3	Chain link	**Y**	Distance

The distance **X** must be at least 10 mm (0.39“ in).

The distance **Y** must be at least 10 mm (0.39“ in).

▶ Make sure that chain link **3** is free.

▶ Make sure that chain link **3** is guided halfway.

The distance **X** between chain link **3** and crawler side frame steel structure must be at least 10 mm (0.39“ in).

▶ Measure distance between chain link **3** and crawler side frame steel structure.

If the distance **X** is not within the permitted range:
▶ Retighten chain (For more information see: 9.12.6 Retightening the chain, page 1837) .

9.12.6 Retightening the chain

Ensure that the following conditions are fulfilled:
❑ The machine is level.
❑ The machine is secured to prevent unauthorised operation.
❑ The required tools from the Liebherr tool kit are available.

NOTICE
Incorrect chain tension!
Increased wear due to excessive chain tension.
Unwinding of the crawler chain due to insufficient chain tension.

▶ Retension the chain according to specifications.

LWN/LR.x/V03.01//Auslieferung/2015-06-03/en

copyright by
LIEBHERR

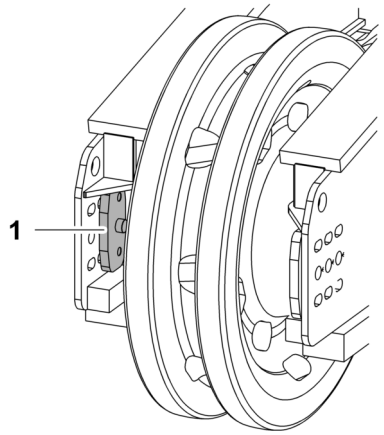

Fig. 5737: Stop hydraulic tension jack

1 Stop hydraulic tension jack

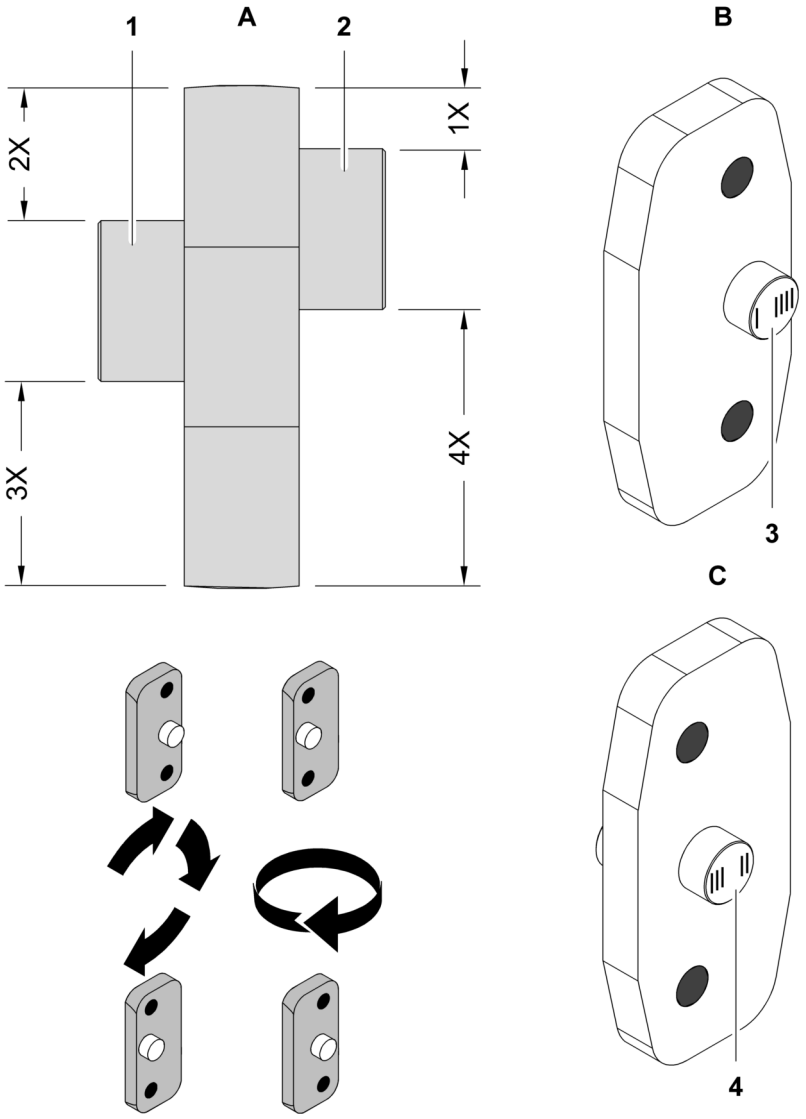

Fig. 5738: Stop hydraulic tension jack

1 Left pin
2 Right pin
A View from top
B View from the right

See next page for continuation of the image legend

LWN/LR.x/V03.01//Auslieferung/2015-06-03/en

3	Right pin with markings	**C**	View from the left
4	Left pin with markings	**X**	Stop path (4x)

The stop is asymmetric. This way, the chain tension can be increased step by step by the stop path **X**. 1 to 4 lines are engraved on the pins. These lines indicate the position of the stop and the stop path **X**. If the chain is tightened, the installation position of the stop must be selected in such a way that the marking on the crawler side frame has one line more than the marking prior to dismantling the stop. Meaning one stop path **X** more. After the fourth line, move forward by one boring for pins **2** and start at the first line again.

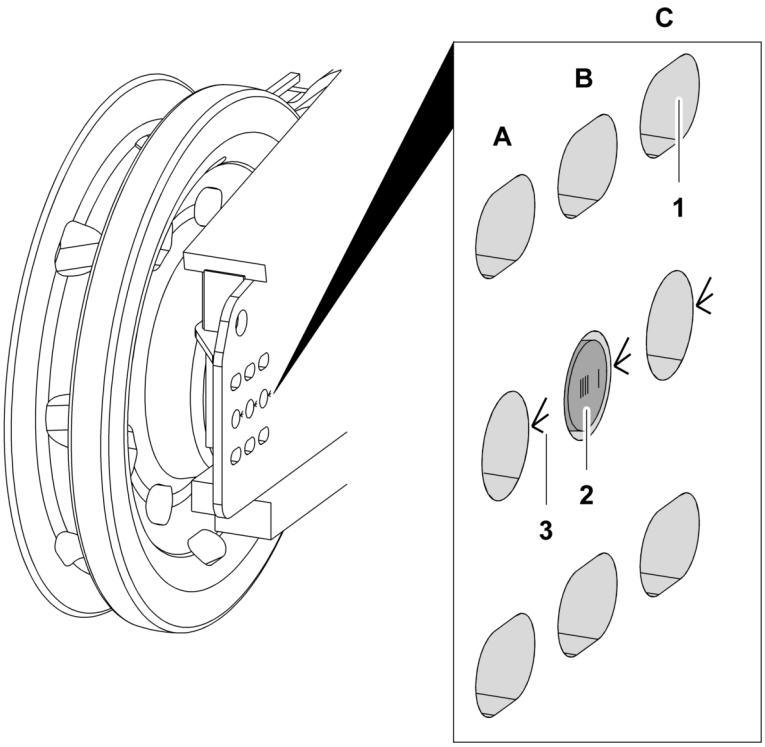

Fig. 5739: Markings on the crawler side frame

1	Attachment hole (6x)	**A**	Next larger distance to B
2	Stop pin with marking	**B**	Current installation position
3	Marking on crawler side frame (3x)	**C**	Next smaller distance to B

The engraved markings on the stop pins **2** must point towards the marking **3**. If there are no markings **3** on the crawler side frame, the valid markings on the stop pin **2** point towards the swing.

LWN/LR.x/V03.01//Auslieferung/2015-06-03/en

copyright by
LIEBHERR

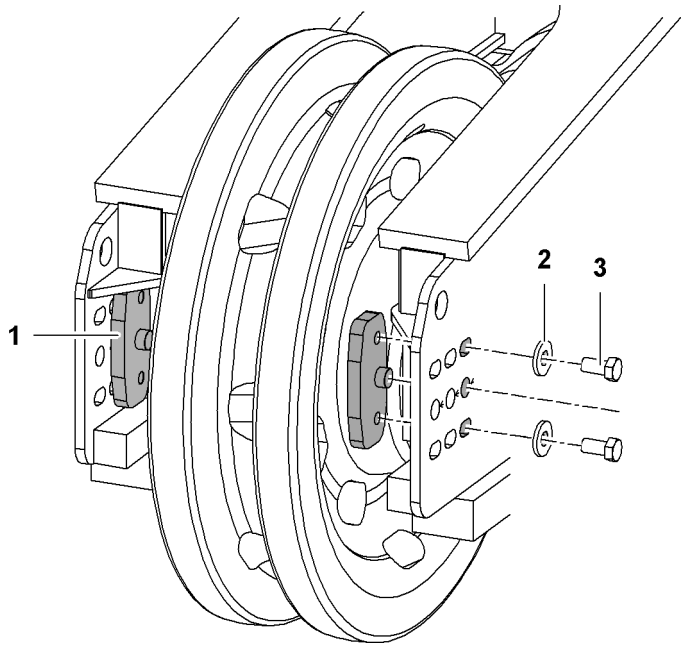

Fig. 5740: Stop crawler side frame

1 Installation position stop (2x)
2 Washer (4x)
3 Screw (4x)

Note down de-installation position of the stop.

▶ Dismantle stop: Undo screws **3**.

▶ Remove washers **2**.

▶ Loosen stop with punch.

If the stop cannot be de-installed:

▶ Release pressure on hydraulic tension jack (For more information see: 9.12.7 Release pressure on hydraulic tension jack, page 1841) .

▶ Define new installation position of stop.

When the last position is reached:

▶ Remove one chain link.

▶ Twist and turn stop in such way that the stop path is enlarged by factor 1X (one line with the marking of the pin).

NOTICE
Incorrect installation of the stop!
Damage to chain.

▶ Make sure that the stop is installed in the same position on both sides of the crawler side frame and with the same marking on the pins.

▶ Install stop on both sides of the crawler side frame.

▶ Insert washers **2**.

▶ Tighten screws **3**.
▷ Chain is taut.

▶ Move machine 3 m (9‘ 10“ ft-in) forward.

▶ To compensate for chain play: move the machine back again.

LWN/LR.x/V03.01//Auslieferung/2015-06-03/en

copyright by
LIEBHERR

▶ Check chain tension (For more information see: 9.12.5 Checking the chain tension, page 1836) .

Different stop installation positions may result with the two crawler side frames.

▶ Repeat the procedure for the second crawler side frame.

9.12.7 Release pressure on hydraulic tension jack

NOTICE
Inadmissible operation of the travel gear!
Hydraulic oil leak.

▶ In case of open chain, close hydraulic feed to hydraulic tension jack.

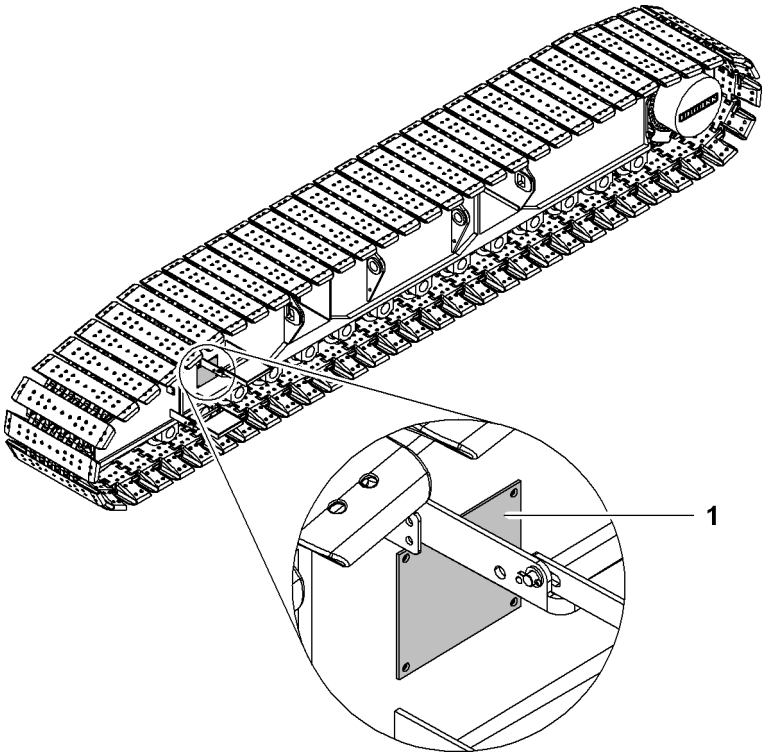

Fig. 5741: Cover crawler side frame

1 Cover

▶ Remove cover **1** on crawler side frame
▷ Hydraulic pipes are visible.

LWN/LR.x/V03.01//Auslieferung/2015-06-03/en

copyright by
LIEBHERR

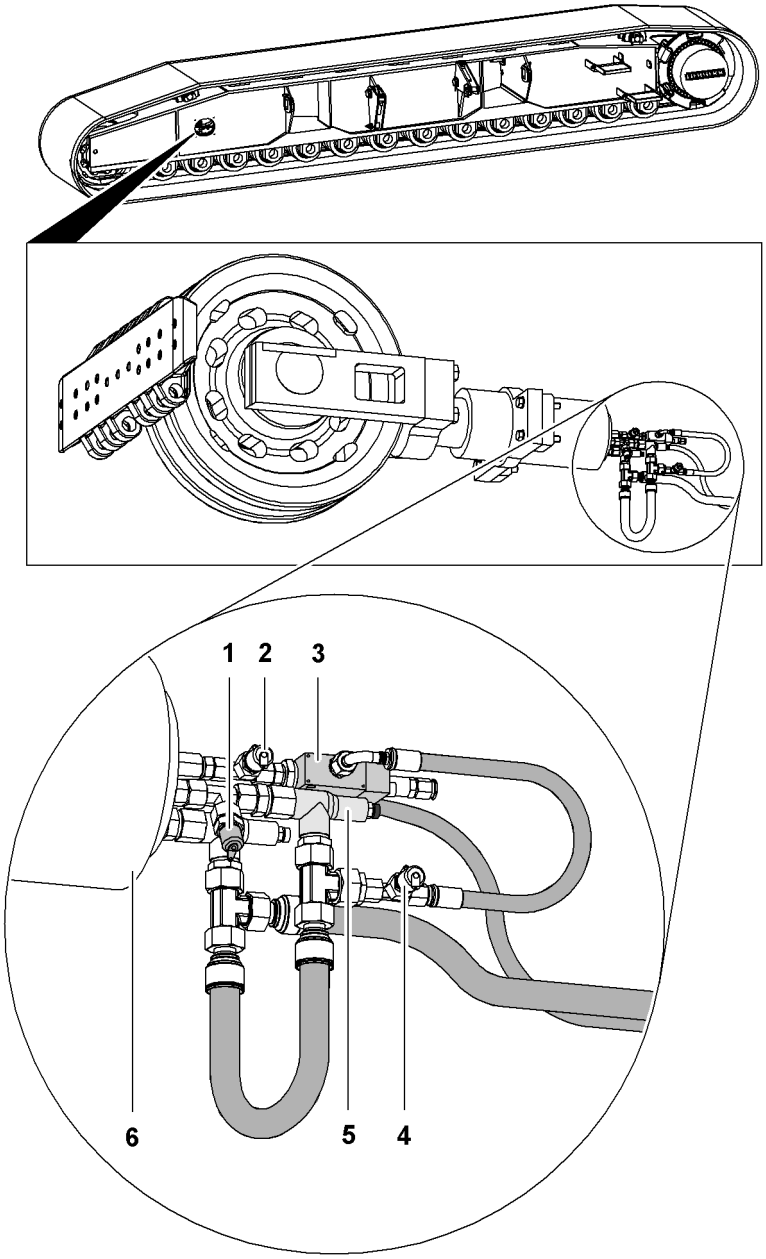

Fig. 5742: Release pressure on hydraulic tension jack

1	Measuring connection	**4**	Measuring connection
2	Measuring connection	**5**	Positive pressure relief valve
3	Pressure reducer	**6**	Hydraulic tensioner

▶ Provide receptacle for hydraulic oil.

▶ Put one end of the miniature measuring cable into the receptacle.

▶ Connect other end of the minimum measuring cable with measuring connection **1**.
- ▷ Hydraulic oil emerges (approx. 0.2 l (6.76 oz)).
- ▷ Hydraulic tension jack **6** is without pressure.
- ▷ The hydraulic cylinder of the hydraulic tension jack **6** is pushed back through the inherent weight of the chain.
- ▷ Clearance on stop.

LWN/LR.x/V03.01//Auslieferung/2015-06-03/en

copyright by
LIEBHERR

▶ Remove miniature measuring cable from measuring connection **1**.

▶ Dismantle stop. (For more information see: 9.12.6 Retightening the chain, page 1837)

9.12.8 Checking locking screws of the track pads axes

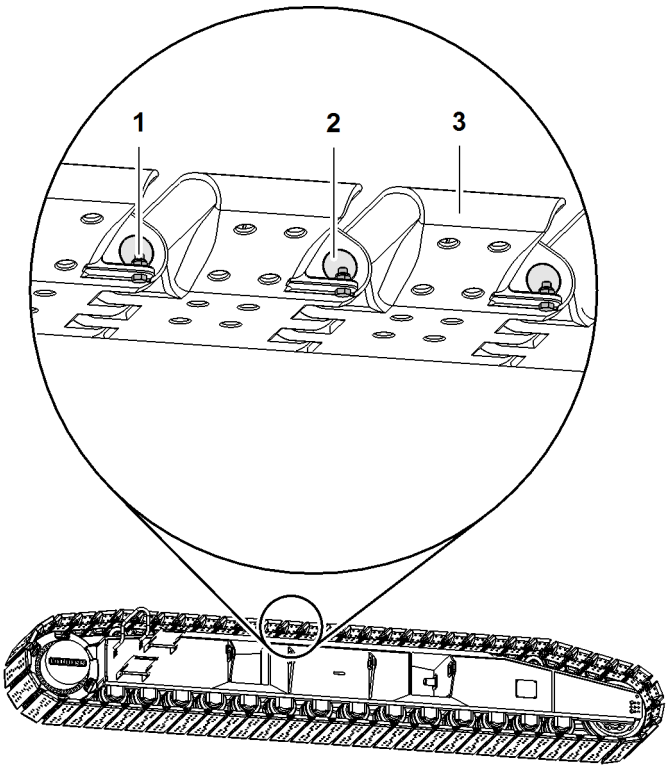

Fig. 5743: Checking locking screws of the track pads axes

1 Screw (2x) with washer and counter nut
2 Axis (2x) of the track pad
3 Track pad

Screws **1** prevent axis **2** from falling out. Because the axes is halved, the outer and inner side of the crawler side frame must be checked.

▶ Check availability of screws **1**.

If screws **1** are not available:
▶ Insert screws **1**.

▶ Check screws **1** for tight fit.

If the screws **1** are loose:
▶ Tighten screws **1**.

LWN/LR.x/V03.01//Auslieferung/2015-06-03/en

copyright by LIEBHERR

9.13 Lifting device

9.13.1 Check transport lashing and round slings for wear (according to EN 1492-2).

DANGER
Incorrectly attached rigging!
Load breakaway.

▶ Check that the transport lashing and round slings have a valid type plate.

▶ Check transport lashing and round slings for wear.

If the transport lashing or round slings show signs of wear:
▶ Replace transport lashing or round slings.

9.13.2 Check the round steel chains for wear and damage

DANGER
Incorrectly attached rigging!
Load breakaway.

▶ Check that the round steel chain has a valid type plate.

When visually checking the round steel chains, pay attention to the following points:
– Type plate should be legible and valid
– There should be no cracks or notches in the chain links or hooks
– Locking elements of the hooks must be present and correct
– Chain links must not be deformed

▶ Check the round steel chains for wear and damage.

If the round steel chains show signs of wear or damage:
▶ Replace round steel chains.

LWN/LR.x/V03.01//Auslieferung/2015-06-03/en

copyright by
LIEBHERR

9.14 Hook/pulley block

9.14.1 Checking all hooks/pulley blocks for damage, wear, corrosion and widening of the hook aperture

DANGER
Damaged or unauthorised rigging material is used!
Load breakaway.

▶ Observe the national and international regulations on the use and inspection of rigging material!

▶ Check all hooks/pulley blocks for signs of damage, wear, corrosion and widening of the hook aperture

If the hooks/pulley blocks are damaged in any way:
▶ Contact Liebherr after sales service.

9.14.2 Lubricating bearings and axels

Ensure that grease gun from Liebherr tool kit is available and filled with correct grease (For more information see: 9.2.3 Lubrication chart, page 1802) .

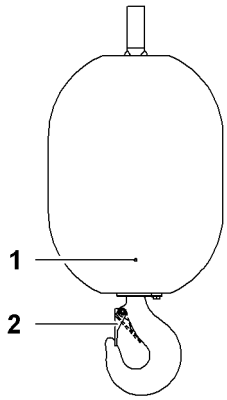

Fig. 5744: Hook

1 Grease nipple

2 Safety catch

LWN/LR.x/V03.01//Auslieferung/2015-06-03/en

copyright by
LIEBHERR

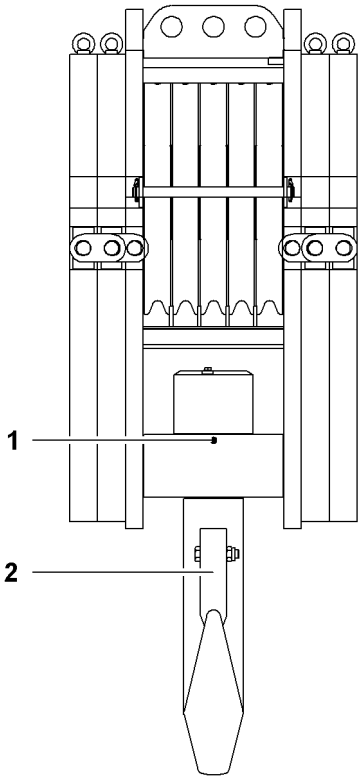

Fig. 5745: Pulley block

1 Grease nipple **2** Safety catch

▶ Using the grease gun, press 10 g (0.02 lb) of grease onto the grease nipple **1**.
▷ Optimal lubrication: During the lubrication process an even collar of fat is formed around the bearing.

9.14.3 Check that the safety catch is present and working properly

CAUTION
Self-closing safety catch!
Crushing.

▶ Protect your hands.

▶ To check the safety catch: push the safety catch back with your hand
▷ The safety catch closes independently.

If the safety catch does not close by itself:
▶ Contact Liebherr after sales service.

LWN/LR.x/V03.01//Auslieferung/2015-06-03/en

copyright by
LIEBHERR

9.15 Hydraulic system

9.15.1 Check the hydraulic system for leaks

Ensure that the following conditions are fulfilled:
- ❑ The machine is level.
- ❑ The machine is secured to prevent unauthorised operation.

CAUTION
Hot hydraulic oil!
Risk of burns.

- ▶ Only perform maintenance and inspection work on hydraulic system when diesel engine is switched off.
- ▶ Wear protective equipment.

- ▶ Check hydraulic system for leaks.

If there is a leak in the hydraulic system:
- ▶ Switch off machine.
- ▶ Contact Liebherr after sales service.

9.15.2 Checking the oil cooler for contamination

- ▶ Check oil cooler for contamination.

If oil cooler is dirty:
- ▶ clean oil cooler.

LWN/LR.x/V03.01//Auslieferung/2015-06-03/en

copyright by
LIEBHERR

9.16 Hydraulic oil tank

9.16.1 Carrying out a hydraulic oil analysis

(For more information see: 9.2.10 Liebherr oil diagnosis system, page 1809)

9.16.2 Filling with hydraulic oil

Note

▶ If replacing “mineral oil-based hydraulic oil” with “synthetic oil-based hydraulic oil”, please contact Liebherr after sales service.

Ensure that the following conditions are fulfilled:
❑ Torque wrench 69 Nm (51 ft-lb) (width across flats 19) is available.
❑ The machine is level.
❑ The machine is secured to prevent unauthorised operation.

CAUTION
Hot engine parts and hydraulic oil!
Risk of burns.

▶ Do not open the cover of the return filter unless the engine is switched off and the temperature of the hydraulic oil is 40° or less.

▶ Wear protective equipment.

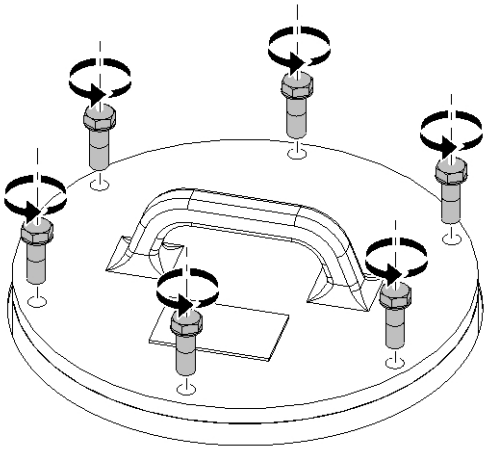

Fig. 5746: Opening the return filter

▶ Undo all screws.

▶ Remove the cover from the housing.

LWN/LR.x/V03.01//Auslieferung/2015-06-03/en

copyright by
LIEBHERR

NOTICE
Inadmissible hydraulic oil or incorrect filling of hydraulic oil!
Damage to hydraulic system.

- ▶ Top up with suitable hydraulic oil only (For more information see: 9.2.3 Lubrication chart, page 1802) .
- ▶ Only fill in clean and water-free hydraulic oil.
- ▶ Only add approved additives or concentrates (For more information see: 9.2.3 Lubrication chart, page 1802) .
- ▶ Ensure that no dirt or foreign bodies enter the return filter.
- ▶ Only fill in pre-filtered hydraulic oil via the return filter.

- ▶ Fill with hydraulic oil.
- ▶ Replace the housing cover and align it so that the screw holes match.

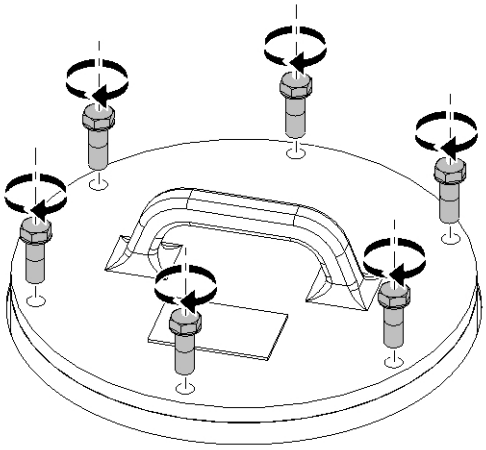

Fig. 5747: Closing the return filter

- ▶ Tighten the screws by hand.
- ▶ Tighten screws with a torque of 69 Nm (51 ft-lb).

9.16.3 Draining the hydraulic oil

Note
Environmental pollution!

- ▶ Fluids such as hydraulic oil, fuel and coolant must be disposed of in accordance with national and international regulations and guidelines.

At the bottom of the hydraulic oil tank is a drain valve.

- ▶ Remove the cover from the drain valve.
- ▶ Connect the oil drain hose from the Liebherr tool kit to the drain valve.
- ▶ Drain the hydraulic oil.

9.16.4 Cleaning the magnetic rod in the return filter

Ensure that a torque wrench 69 Nm (51 ft-lb) (width across flats 19) is available.

LWN/LR.x/V03.01//Auslieferung/2015-06-03/en

copyright by LIEBHERR

Opening the return filter

CAUTION
Hot engine parts and hydraulic oil!
Risk of burns.

- ▶ Do not open the cover of the return filter unless the engine is switched off and the temperature of the hydraulic oil is 40° or less.
- ▶ Wear protective equipment.

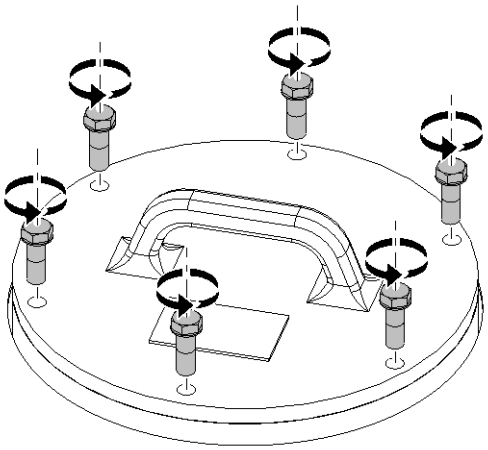

Fig. 5748: Opening the return filter

- ▶ Undo all screws.

NOTICE
Dirt and foreign bodies in return filter!
Damage to the hydraulic system.

- ▶ Ensure that no dirt or foreign bodies enter the return filter.

- ▶ Remove the cover from the housing.

LWN/LR.x/V03.01//Auslieferung/2015-06-03/en

copyright by
LIEBHERR

Cleaning the magnetic rod

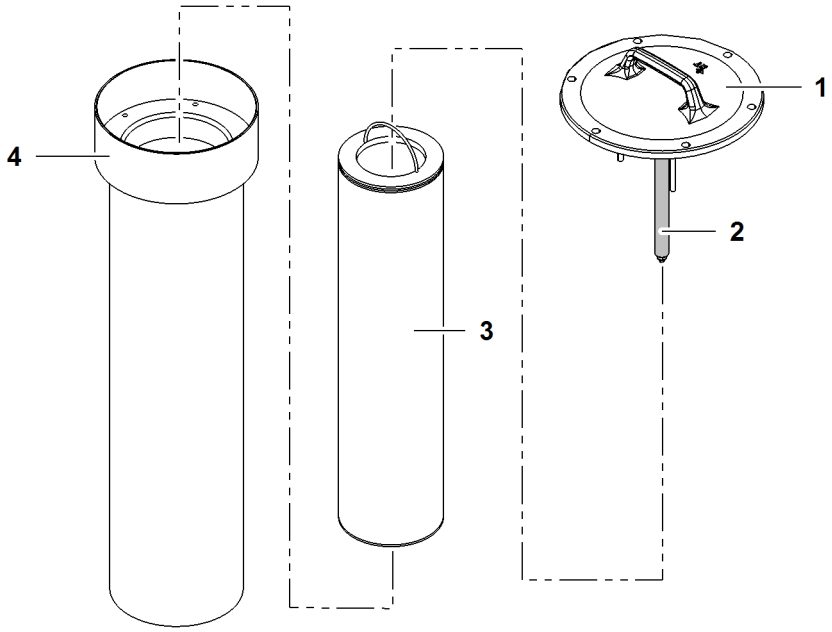

Fig. 5749: Cleaning the magnetic rod

1	Cover	**3**	Return filter
2	Magnetic rod	**4**	Housing in the hydraulic oil tank

▶ Clean the magnetic rod **2** using a clean cloth.

Note

▶ Dispose of the oil-stained cleaning cloth according to the appropriate regulations.

Closing the return filter

▶ Replace the housing cover and align it so that the screw holes match.

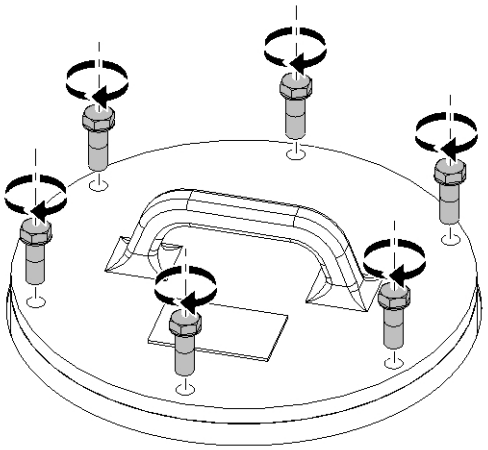

Fig. 5750: Closing the return filter

LWN/LR.x/V03.01//Auslieferung/2015-06-03/en

copyright by
LIEBHERR

- ▶ Tighten the screws by hand.
- ▶ Torque the screws to 69 Nm (51 ft-lb).

LWN/LR.x/V03.01//Auslieferung/2015-06-03/en

copyright by
LIEBHERR

9.17 Hydraulic oil filter

9.17.1 Exchanging the hydraulic oil filter elements

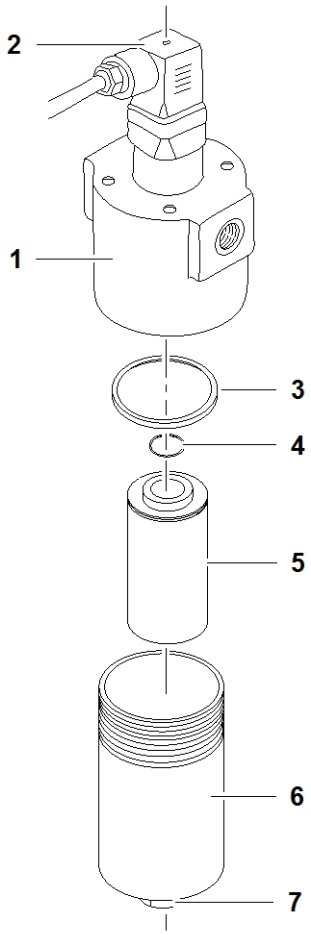

Fig. 5751: Exchanging the hydraulic oil filter elements

1	Top part of housing	**5**	Filter element
2	Pressure sensor	**6**	Bottom part of housing
3	Seal ring	**7**	Nut (welded on)
4	O-ring		

▶ Undo bottom part of housing **7** with nut **6** and take off.

▶ Carefully remove filter element **5** and dispose of remaining oil of the bottom part of the housing **6**.

▶ Clean all parts thoroughly.

▶ Check O-ring **4** and seal ring **3** for damage.

If O-ring or seal ring are damaged:

▶ exchange O-ring **4** or seal ring **3**.

▶ Remove all dirt on the inside of the filter housing.

▶ Insert new filter element **5**.

LWN/LR.x/V03.01//Auslieferung/2015-06-03/en

copyright by
LIEBHERR

Ensure cleanliness and correct fit of the O-ring **4** and seal ring **3**.

- ▶ Reassemble parts in reverse order.
- ▶ Tighten nut **7** of the bottom part of the housing **6** all the way to the stop.
- ▶ Start diesel engine and allow it to idle for 5 minutes.
- ▶ Turn off diesel engine and again tighten nut **7** of the bottom part of the housing **6** all the way to the stop.
- ▶ Start diesel engine and allow it to idle.
- ▶ Check hydraulic system for leaks.

If hydraulic system leaks:
- ▶ contact Liebherr customer service.

LWN/LR.x/V03.01//Auslieferung/2015-06-03/en

copyright by
LIEBHERR

9.18 Hydraulic cylinders

9.18.1 Check that the hydraulic cylinder fits properly and does not leak

▶ Check that the hydraulic cylinder fits properly and does not leak.

If the hydraulic cylinder is leaking or loose:
▶ Contact Liebherr after sales service.

9.18.2 Protecting the piston rods of the hydraulic cylinders from corrosion

The piston rods on all hydraulic cylinders are chrome-plated. Despite this, dirty and aggressive materials can still damage the chrome coating. The chrome coating only offers a certain level of protection.

▶ Ensure that the piston rods are in perfect condition and clean.

▶ Extend and retract piston rods at least once a week.

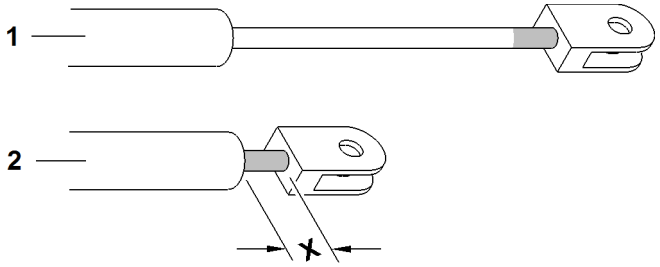

Fig. 5752: Overlap piston rod (illustration of principle)

1 Extended piston rod
2 Retracted piston rod
X Overlap piston rod

▶ Wrap overlap of piston rod **X** with Denso tape.

9.18.3 Preserving the piston rods of the hydraulic cylinders in case of longer periods of non-use

▶ Wrap piston rods with Denso tape.
or

Preserve piston rods with the protective agent CORTEC VCI 369.

LWN/LR.x/V03.01//Auslieferung/2015-06-03/en

copyright by
LIEBHERR

9.19 Hydraulic hoses

9.19.1 Checking the hydraulic hoses

▶ Check hydraulic hoses for damage and tears.

If damage or tears are visible on the hydraulic hoses:
▶ Contact Liebherr customer service.

LWN/LR.x/V03.01//Auslieferung/2015-06-03/en

copyright by
LIEBHERR

9.20 Bypass filter system

9.20.1 Checking the bypass filter system

Make sure the following prerequisites are met:
❑ Hydraulic oil is at operating temperature.

▶ Read dynamic pressure manometer on bypass flow filter.

If the dynamic pressure manometer of the bypass flow filter shows 1 bar (14.50 psi) above the initial value (normal value):
▶ change the filter elements.

9.20.2 Changing the filter elements

Ensure that the following conditions are fulfilled:
❑ Diesel engine has been switched off for 5 minutes.
❑ Machine is level.
❑ Machine is secured against unauthorized start-up.

Note

Liebherr recommends:
▶ If the machine is subjected to heavy work: halve the exchange interval.

The filter elements cannot be cleaned and must be disposed of in accordance with the national and international regulations and guidelines.

LWN/LR.x/V03.01//Auslieferung/2015-06-03/en

copyright by
LIEBHERR

Removing filter elements

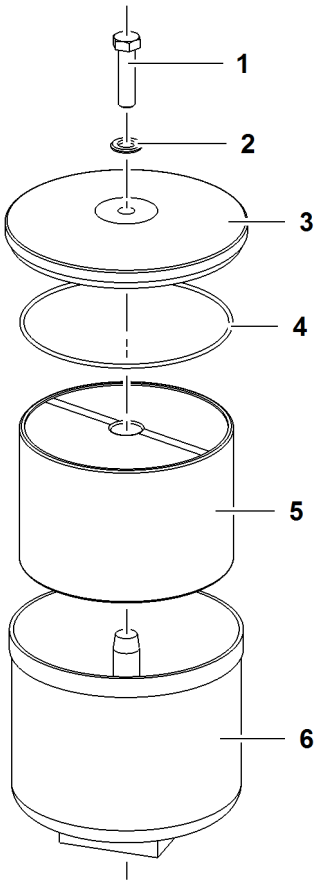

Fig. 5753: Removing filter elements

1	Screw	**4**	O-ring
2	Washer	**5**	Filter element
3	Cover	**6**	Filter housing

CAUTION
Hot surfaces and hot operating liquids!
Risk of burning hands.

- ▶ Only exchange filter elements **5** when the machine stands still and the hydraulic system is without pressure.

- ▶ Open the cover **3** of the filter housing **6**.
- ▶ Turn filter elements **5** clockwise with the help of the carrier straps and lift at the same time.
- ▶ Let filter element **5** drain if necessary.
- ▶ Remove filter element **5**.
- ▶ Check feed and discharge in the filter housing **6** for free flow.

LWN/LR.x/V03.01//Auslieferung/2015-06-03/en

copyright by
LIEBHERR

Inserting filter elements

Note
The carton is a functional part of the filter!

▶ Do not remove carton wrap.

▶ Insert the filter element **5** in such a way that the lettering is legible and the protective polypropylene base is on the bottom.

▶ Replace O-ring **4**.

▶ Check washer **2**.

If washer **2** is defect:
▶ replace washer **2**.

▶ Tighten screw **1** with a torque of 49 Nm (36 ft-lb).

LWN/LR.x/V03.01//Auslieferung/2015-06-03/en

copyright by
LIEBHERR

9.21 Batteries

9.21.1 Checking the fluid level in the cells

NOTICE
Contamination and moisture on the battery!
Damage to battery.

▶ Keep battery clean and dry.

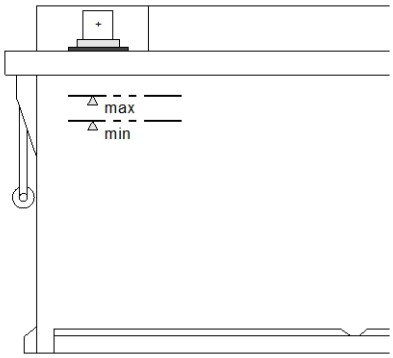

Fig. 5754: Checking the fluid level in the cells

▶ Check the fluid level in the cells.

If the fluid level is below the MIN mark:
▶ fill in distilled water.

9.21.2 Checking the battery fluid

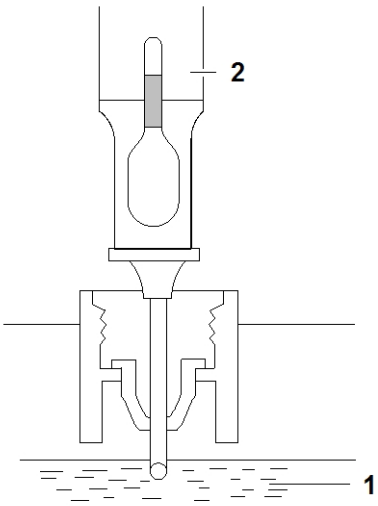

Fig. 5755: Checking the battery fluid

1 Battery fluid **2** Acid tester

▶ Observe operation manual of the testing devices.

LWN/LR.x/V03.01//Auslieferung/2015-06-03/en

copyright by
LIEBHERR

▶ Check battery fluid **1** with refractometer or acid tester **2**.

▶ Top up with fluid if required or contact Liebherr customer service.

9.21.3 Exchanging the fuses on the battery

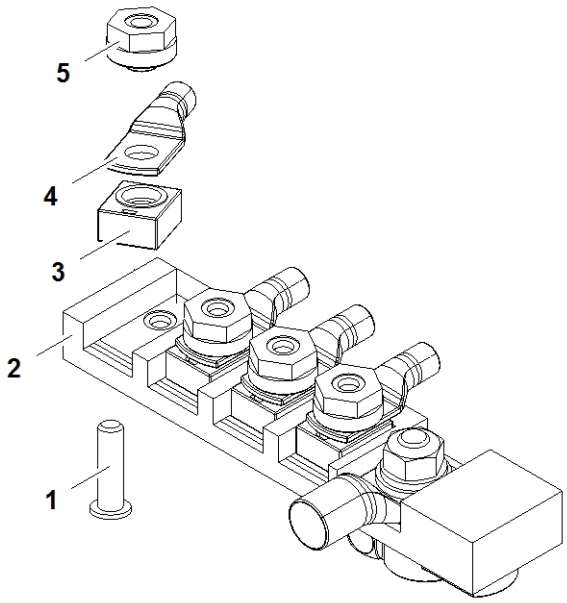

Fig. 5756: Exchanging the fuses on the battery

1 Locking screw
2 Fuse block
3 Fuse element
4 Electric cable (consumer)
5 Insulation nut

Spare insulation nuts and spare fuse elements are located in the fuse box in the switch cabinet.

▶ Exchange insulation nuts or fuse elements when required.

LWN/LR.x/V03.01//Auslieferung/2015-06-03/en

copyright by
LIEBHERR

9.22 Lighting

9.22.1 Checking that the cabin lighting, floodlights and auxiliary floodlights are working properly

The floodlights should illuminate if the appropriate button in the cab is pressed.

▶ Check that the cabin lighting, floodlights and auxiliary floodlights are working properly.

If the cabin lighting, floodlights and auxiliary floodlights do not switch on:
▶ Check the fuses and electric cables.

▶ Change the bulbs.

If the cabin lighting, floodlights and auxiliary floodlights do not switch on again:
▶ Contact Liebherr after sales service.

9.22.2 Changing the cab lamp light bulb

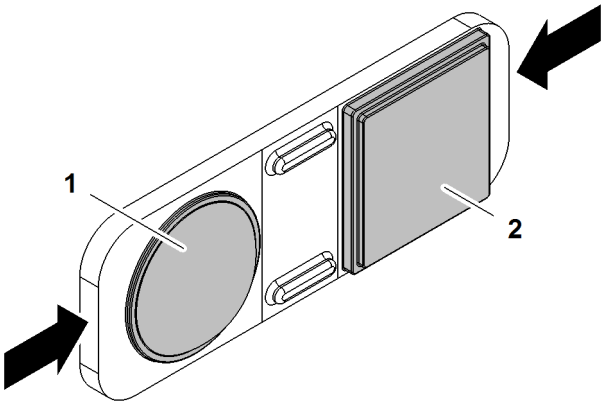

Fig. 5757: Changing the cab lamp light bulb

1 Curved glass **2** Clear plate

Ensure that the following conditions are fulfilled:
❑ New bulb **R10W 24 V/10 W** is available.
❑ The battery main switch is switched off.

▶ Remove the clear plate **2** and curved glass **1** from the front by pressing on the sides.

▶ Remove defect bulb and dispose of properly.

▶ Insert new bulb.

▶ Refit the clear plate **2** and curved glass **1**.
▷ Cabin lighting ready for operation.

9.22.3 Changing the bulbs of floodlights on the cabin and on the uppercarriage

The following floodlights are available:
– Halogen floodlights
– Xenon floodlight

LWN/LR.x/V03.01//Auslieferung/2015-06-03/en

copyright by LIEBHERR

– LED floodlight

Xenon and halogen floodlights

Ensure that the following conditions are fulfilled:
❑ The battery main switch is switched off.
❑ New Liebherr bulbs are available.
- for halogen floodlights: **H3 24 V/70 W**
- for xenon floodlights: **D2S 24 V/35 W**

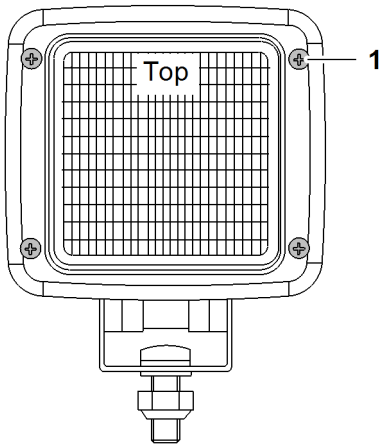

Fig. 5758: Floodlights on the cabin and on the uppercarriage

1 Screw (4x)

▶ Undo all screws **1**.

LWN/LR.x/V03.01//Auslieferung/2015-06-03/en

copyright by
LIEBHERR

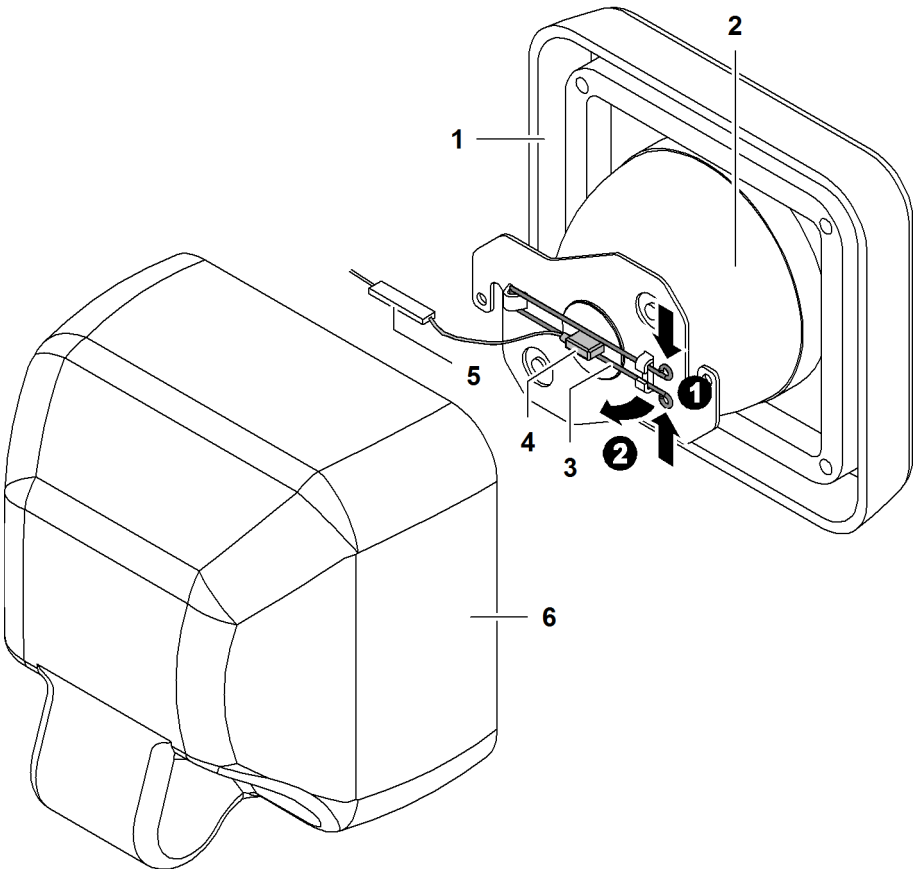

Fig. 5759: Floodlight open

1	Cover	**4**	Bulb with electric cable
2	Floodlight with reflector	**5**	Electric plug
3	Spring steel bracket	**6**	Housing

The cover **1** has a drainage opening on the bottom.

The reflector of the floodlight **2** has a guide notch on the top.

▶ Take off the cover **1**.

▶ Take out floodlight **2** with reflector.

▶ Press together the spring steel bracket **3** and lift.

▶ Unplug electric plug **5** of the bulb.

▶ Remove defect bulb **4** and dispose of properly.

NOTICE
Fragile bulb!
Bulb may be damaged.

▶ Do not touch the bulb directly with your fingers.

Note
Fingerprints on bulb!
Liebherr recommends:

▶ Clean bulb with a clean cloth and alcohol.

▶ Insert new bulb **4**.

LWN/LR.x/V03.01//Auslieferung/2015-06-03/en

copyright by
LIEBHERR

- ▶ Press together the spring steel bracket **3** and lower.
- ▶ Snap spring steel bracket **3** into mounts.
- ▶ Plug in electric cable of the bulb **4**.
- ▶ Insert floodlight **2** with reflector (observe installation direction).
- ▶ Put on cover (observe installation direction).
- ▶ Tighten all screws **1**.
  - ▷ Floodlights ready for operation.

LED floodlight

LED floodlights must be replaced completely.

9.22.4 Changing the bulbs of search floodlights

Ensure that the following conditions are fulfilled:
- ❑ New bulb **H3 24 V/70 W** is available.
- ❑ Main battery switch is switched off.

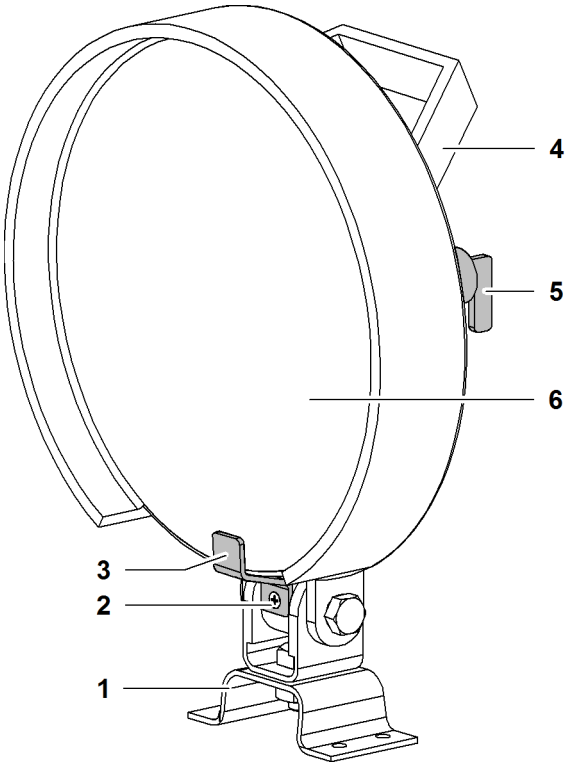

Fig. 5760: Search floodlight

1	Mount	**4**	Handle
2	Screw	**5**	Switch
3	Bracket	**6**	Floodlight glass

The floodlight glass **6** has an indentation below the bracket **3**. The indentation must be located in the same position again when installing.

- ▶ Undo screw **2** and remove bracket **3**.
- ▶ Lift floodlight glass **6**.
- ▶ Unplug electric cable of the bulb.

LWN/LR.x/V03.01//Auslieferung/2015-06-03/en

copyright by
LIEBHERR

▶ Press together the spring steel bracket and lift.

▶ Remove defect bulb and dispose of properly.

NOTICE
Fragile bulb!
Bulb may be damaged.

▶ Do not touch the bulb directly with your fingers.

Note
Fingerprints on bulb!
Liebherr recommends:

▶ Clean bulb with a clean cloth and alcohol.

▶ Insert new bulb.

▶ Press together the spring steel bracket and lower.

▶ Snap spring steel bracket into mounts.

▶ Plug in electric cable of the bulb.

▶ Put on floodlight glass **6** (observe installation direction).

▶ Tighten bracket **3** with screw **2**.
▷ Floodlights ready for operation.

9.22.5 Changing the bulbs of floodlights on main boom base section

The following floodlights are available:
– Xenon floodlight
– LED floodlight

Xenon floodlight

Ensure that the following conditions are fulfilled:
❑ New bulb **xenon gas discharge lamp 24 V/42 W** is available.
❑ Main battery switch is switched off.

CAUTION
Hot bulb!
Risk of burning of limbs.

▶ Leave bulb to cool down for at least 30 minutes.

WARNING
Bulb breaking in a closed room!
Intoxication.

▶ Air room for at least 20 minutes.

▶ Leave room.

LWN/LR.x/V03.01//Auslieferung/2015-06-03/en

copyright by
LIEBHERR

WARNING
Bulb under pressure!
Serious injury.

▶ Wear safety goggles and safety gloves.

WARNING
High-voltage control gear!
Electric shock.

▶ Turn main battery switch off a few minutes prior to changing the bulb.

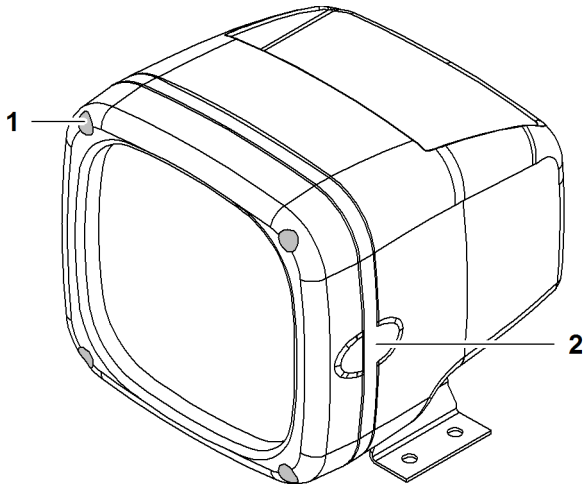

Fig. 5761: Xenon floodlights on main boom base section

1 Screw (4x)
2 Lateral marking (2x)

▶ Undo all screws **1**.

LWN/LR.x/V03.01//Auslieferung/2015-06-03/en

copyright by
LIEBHERR

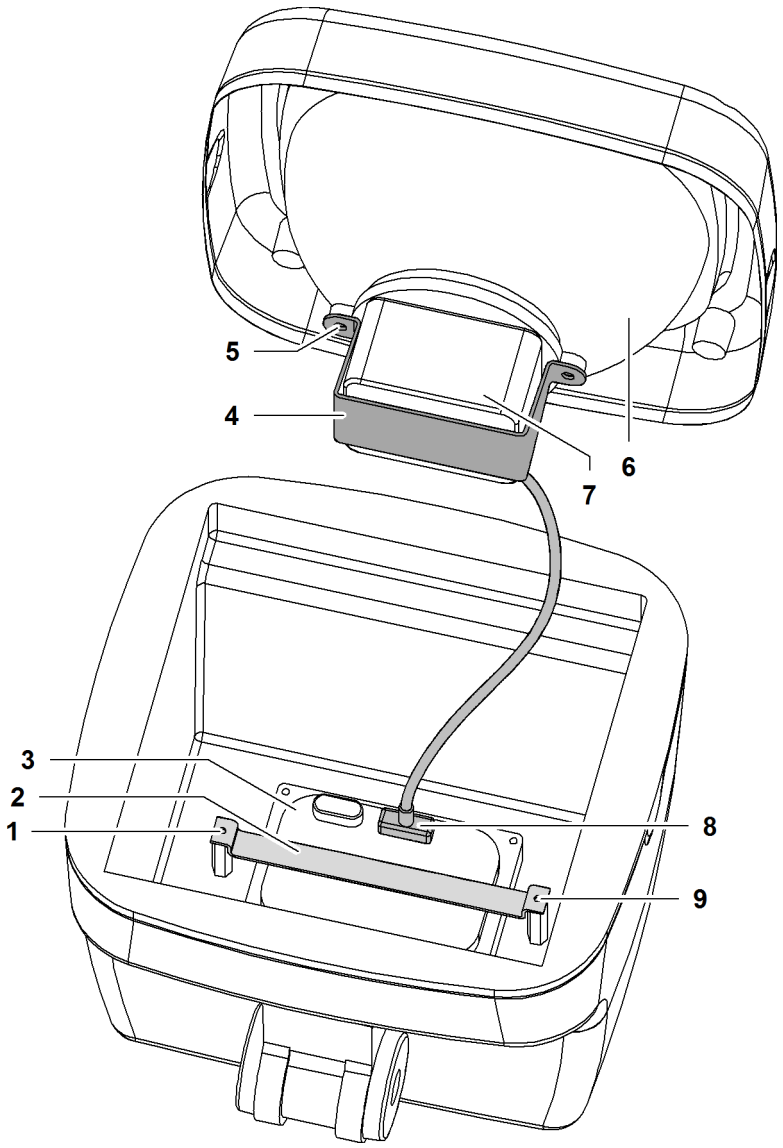

Fig. 5762: Open xenon floodlight

1	Left screw	**6**	Floodlight with reflector
2	Bracket control gear	**7**	Bulb with electric cable
3	Control gear	**8**	Electric plug
4	Bracket bulb	**9**	Right screw
5	Screw (2x)		

The electric plug **7** is secured with a plug locking mechanism on the side of the control gear.

- ▶ Lift floodlight **6** with reflector.
- ▶ Loosen the left screw **1** of the bracket **2**.
- ▶ Remove the right screw **9** of the bracket **2**.
- ▶ Take off bracket **2**.
- ▶ Lift control gear **3** and undo plug locking mechanism of the electric plug **8**.
- ▶ Pull out electric plug **8**.
- ▶ Undo both screws **5**.
- ▶ Remove bracket **4**.

LWN/LR.x/V03.01/Auslieferung/2015-06-03/en

copyright by
LIEBHERR

▶ Remove defect bulb **7** and dispose of properly.

NOTICE
Fragile bulb!
Bulb may be damaged.

▶ Do not touch the bulb directly with your fingers.

Note
Fingerprints on bulb!
Liebherr recommends:

▶ Clean bulb with a clean cloth and alcohol.

Note
Color differences in bulbs!
Liebherr recommends:

▶ If there are more than one bulb, exchange all bulbs to prevent color differences.

▶ Insert new bulb **7**.

▶ Tighten bracket **4** over bulb **7** with screws **5**.

▶ Insert electric plug **8** of bulb **7** until plug locking mechanism snaps into place.

▶ Insert bracket **2** over control gear on left screw **1**.

▶ Insert and tighten right screw **9**.

▶ Tighten left screw **1**.

▶ Insert floodlight **6** with reflector (observe installation direction).

▶ Close floodlight housing and tighten the screws.
▷ Floodlights ready for operation.

LED floodlights

LED floodlights must be replaced completely.

9.22.6 Exchanging the bulbs of floodlights on main boom or jib head

The following floodlights are available:
– High-pressure sodium vapor lamp
– LED floodlight

High-pressure sodium vapor lamp

Ensure that the following conditions are fulfilled:
❑ New bulb **gas discharge lamp SON-T 230 V/1000 W** is available.
❑ Main battery switch is switched off.

LWN/LR.x/V03.01//Auslieferung/2015-06-03/en

copyright by
LIEBHERR

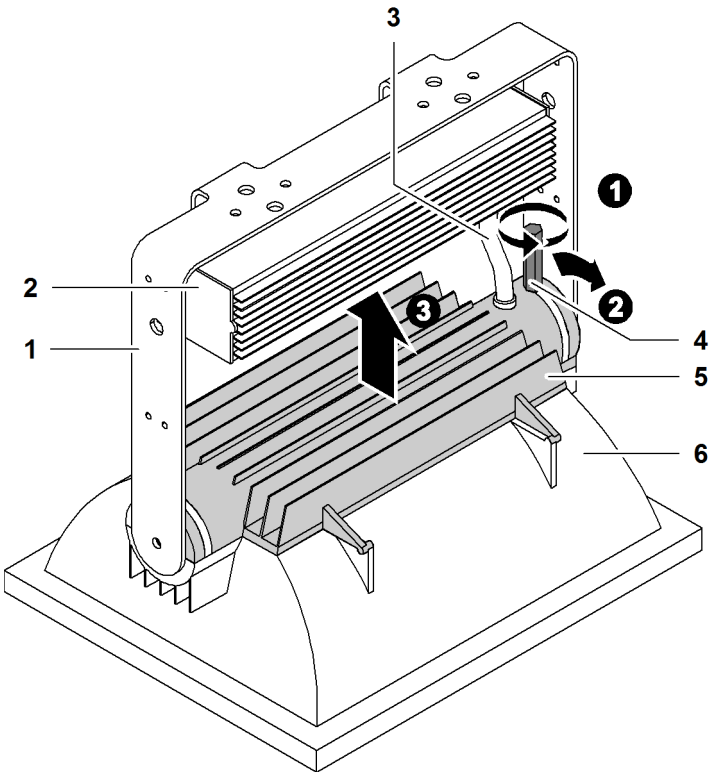

Fig. 5763: Exchanging floodlights on main boom or jib head

1	Bracket	**4**	Lever (2x)
2	Control gear	**5**	Cover
3	Electric cable	**6**	Main reflector

▶ Undo both levers **4**: Turn lever **4** counter-clockwise.

▶ Pull down both levers **4**.

▶ Fold the cover **5** up.
▷ Bulb is visible in the cover **5**.

▶ Twist bulb counter-clockwise.

▶ Dispose of defect bulb properly.

NOTICE
Fragile bulb!
Bulb may be damaged.

▶ Do not touch the bulb directly with your fingers.

Note
Fingerprints on bulb!
Liebherr recommends:

▶ Clean bulb with a clean cloth and alcohol.

▶ Insert new bulb.

LWN/LR.x/V03.01//Auslieferung/2015-06-03/en

Note
Defect electric cable!
Liebherr recommends:

▶ Ensure that the electric cable does not become pinched when assembling.

▶ Close the cover **5**.

▶ Pull up both levers **4**.

▶ Tighten both levers **4** clockwise.
▷ Floodlights ready for operation.

LED floodlight

LED floodlights must be replaced completely.

LWN/LR.x/V03.01//Auslieferung/2015-06-03/en

copyright by
LIEBHERR

9.23 Rope measuring system

9.23.1 Checking the rope measuring system and height adjustment of all winches (if available) for correct function

Make sure the following prerequisites are met:
- ❑ There is no load on the hook.
- ❑ Diesel engine is switched on.

▶ Lower rope of winch1/winch2 until hook touches the ground.

▶ Press the *Settings* button on the monitor.

▶ Press the *Settings - components* button on the screen.

▶ Press the button *Set to zero* of winch1/winch2 on the monitor.

▶ Lift rope of winch1/winch2 until rope measuring system shows 1 m (3‘ 3“ ft-in) on the monitor.

▶ Measure distance between hook and ground with suitable measuring instrument.

If the distance between the hook and the ground does not correspond to the rope measuring system value:
▶ Contact Liebherr customer service.

9.23.2 Readjusting layer change when changing ropes

(For more information see: Programming layer change, page 980)

LWN/LR.x/V03.01//Auslieferung/2015-06-03/en

copyright by
LIEBHERR

9.24 Limit switches

9.24.1 Checking hoist limit switches, boom limit switches and, if necessary, limit switches of the piling and drilling rig to ensure they are working correctly

▶ Check the operation of the limit switches: instruct an assistant to manually trigger the limit switches.

If the activated limit switch does not register on the monitor:
▶ Contact Liebherr after sales service.

LWN/LR.x/V03.01//Auslieferung/2015-06-03/en

copyright by
LIEBHERR

9.25 Mechanical inclinometer

9.25.1 Checking that the mechanical inclinometer is working properly

▶ Check that the mechanical inclinometer is working properly.

If the mechanical inclinometer is faulty in any way:
▶ contact Liebherr service department.

LWN/LR.x/V03.01//Auslieferung/2015-06-03/en

copyright by
LIEBHERR

9.26 Emergency stop

9.26.1 Checking the emergency stop

WARNING
Unauthorized triggering of the emergency stop!
Severe injuries, damage to machine.

▶ The emergency stop may only be triggered when the diesel engine is running, the machine is not moving and no load is attached.

▶ Check that all emergency stops are working.

If the diesel engine does not switch off:
▶ Contact Liebherr customer service.

LWN/LR.x/V03.01//Auslieferung/2015-06-03/en

copyright by
LIEBHERR

9.27 Obstacle warning light*

9.27.1 Check obstacle warning light for function and damage, check mains cable and plug (if available) for damage

▶ Check obstacle warning light for function and damage.

If the obstacle warning light is damaged or does not function:
▶ Contact Liebherr customer service.

▶ Check mains cable and plug (if available) for damage.

If mains cable or plug are damaged:
▶ Contact Liebherr customer service.

LWN/LR.x/V03.01//Auslieferung/2015-06-03/en

copyright by
LIEBHERR

9.28 Fire extinguishers

9.28.1 Checking the seals and inspection dates on the fire extinguishers

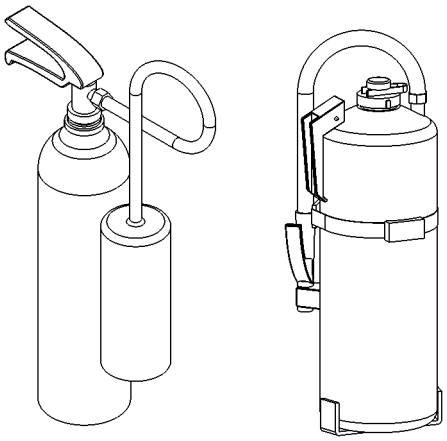

Fig. 5767: Check fire extinguishers for presence of seals and inspection due dates

NOTICE
Unsuitable or broken fire extinguishers!

▶ Note the type plate on the fire extinguisher.

▶ Observe national regulations.

The guidelines for checking hand extinguishers are nationally regulated.

▶ Check the seals and inspection dates on the fire extinguishers.

If the fire extinguishers are missing or the inspection dates have been passed:
▶ Replace the fire extinguishers or have them inspected.

LWN/LR.x/V03.01//Auslieferung/2015-06-03/en

copyright by
LIEBHERR

9.29 Personal protective equipment

9.29.1 Checking personal protective gear

WARNING
Inadequate protection!

- Observe the manufacturer's guidelines on care and maintenance of the protective gear.
- Do not repair protective gear yourself.

- Check that the personal protective gear is in place, intact and complete (For more information see: 2.4 Personal protective equipment, page 546) .

If the personal protective gear is not present, damaged, or incomplete:
- Complete the personal protective gear.
- Clean the personal protective gear.
- Have the personal protective gear cleaned.

LWN/LR.x/V03.01//Auslieferung/2015-06-03/en

copyright by
LIEBHERR

9.30 Safety signs

9.30.1 Checking that all required safety labels are mounted on the machine and are legible

▶ Check safety labels to ensure they are complete and legible.

If safety labels are not complete or illegible:

▶ Complete the safety labels.

▶ Clean or replace safety labels.

LWN/LR.x/V03.01//Auslieferung/2015-06-03/en

copyright by
LIEBHERR

9.31 Access systems and railings

9.31.1 Checking ladders, steps, platforms, and ascents for wear, damage and anti-slip surfaces

WARNING
Insufficient protection of machine operators and maintenance personnel!
Severe injury.

- ▶ Ensure that damaged or worn ladders, steps, platforms, or ascents are not used.
- ▶ Ensure that damaged or worn ladders, steps, platforms, or ascents are repaired immediately.

- ▶ Check ladders, steps, platforms, and ascents for wear, damage and anti-slip surfaces.

If wear or damage are visible on access systems:
- ▶ Repair access systems.

9.31.2 Checking latches and hand rails for wear and damage

- ▶ Check latches and hand rails for wear and damage.

If wear or damage are visible on latches or handrails:
- ▶ Repair latches and hand rails.

9.31.3 Checking the spring tension of railing doors

When releasing the completely opened railing door, the spring tension of the hinges must be strong enough so that the railing door closes on its own and the rubber buffer is pressed onto the stop with some force.

WARNING
Railing door does not close automatically!
Fall from machine.

- ▶ Increase spring tension of railing doors.

WARNING
Railing door closes too tight!
Fall from machine.

- ▶ Decrease spring tension of railing doors.

- ▶ Check spring tension of railing doors.

If the railing door does not close automatically:
- ▶ Increase spring tension of railing door.

If the railing door closes too tight:
- ▶ Decrease spring tension of railing door.

LWN/LR.x/V03.01//Auslieferung/2015-06-03/en

copyright by
LIEBHERR

9.31.4 Setting the spring tension of railing doors

Ensure that the following conditions are fulfilled:
❑ Size 4 pin punch is available.

A pin punch is a tool for knocking through or knocking out split pins, pins or pegs.

Increasing the spring tension of the railing door

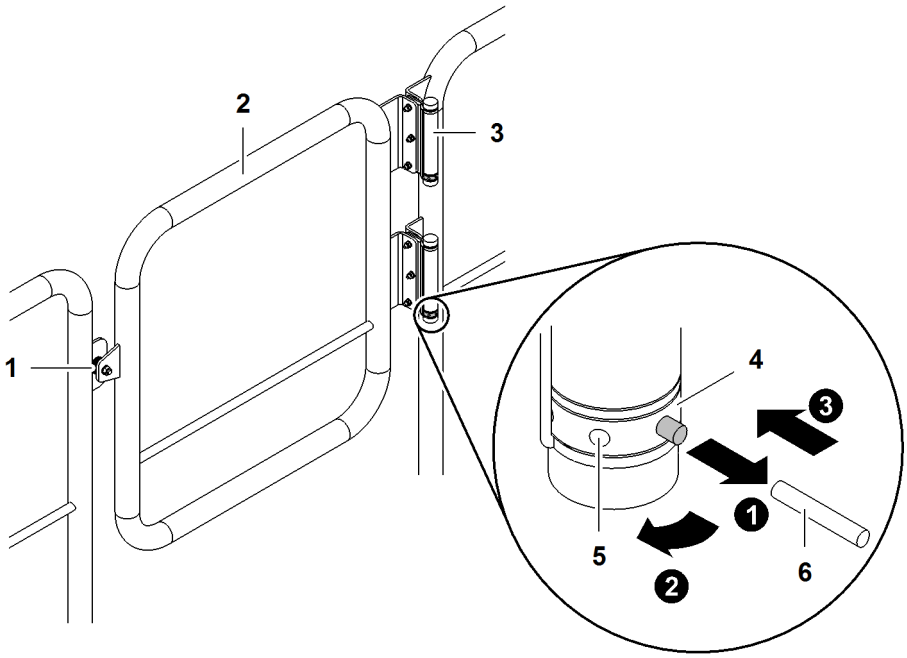

Fig. 5768: Increasing the spring tension of the railing doors

1	Rubber buffer	**4**	Spring adjuster ring (2x)
2	Railing door	**5**	Boring
3	Hinge (2x)	**6**	Peg

Spring adjuster rings **3** are located on the hinges **4** and serve to adjust the spring tension.

▶ Insert pin punch at hinge **5** boring **3**.

▶ Turn spring aduster ring **4** clockwise.
▷ Peg **6** is relieved.

▶ Remove peg **6**.

▶ Turn spring adjuster ring **4** clockwise until peg **6** can be reinserted.

▶ Insert peg **6**.

▶ Remove pin punch.

▶ Repeat procedure on all hinges **3**.

LWN/LR.x/V03.01//Auslieferung/2015-06-03/en

copyright by
LIEBHERR

Decreasing the spring tension of the railing door

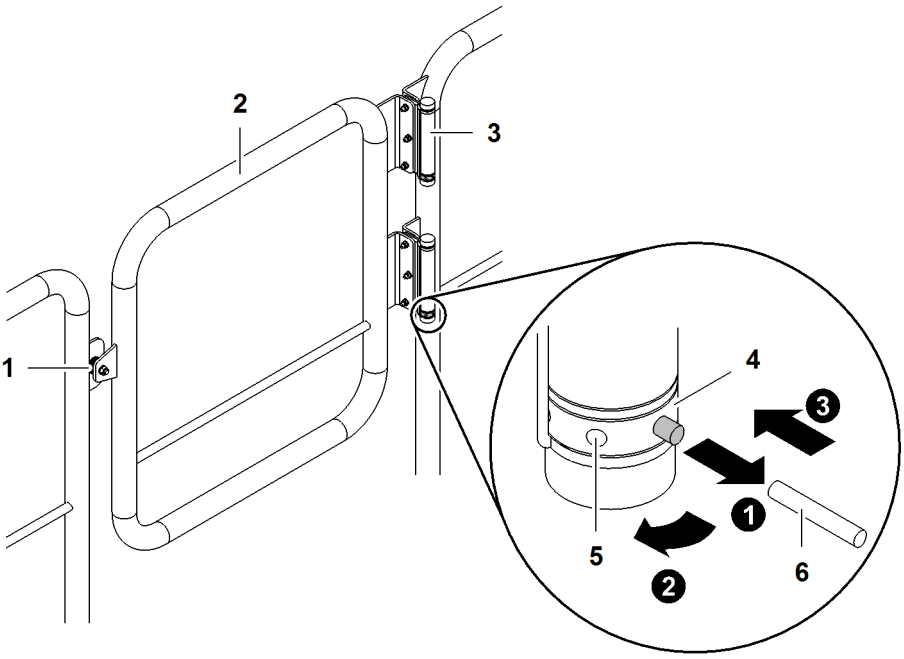

Fig. 5769: Decreasing the spring tension of the railing doors

1	Rubber buffer	**4**	Spring adjuster ring (2x)
2	Railing door	**5**	Boring
3	Hinge (2x)	**6**	Peg

- ▶ Insert pin punch at hinge **5** boring **3**.
- ▶ Turn spring aduster ring **4** clockwise.
  - ▷ Peg **6** is relieved.
- ▶ Remove peg **6**.
- ▶ Turn spring adjuster ring **4** counter-clockwise until peg **6** can be reinserted.
- ▶ Insert peg **6**.
- ▶ Remove pin punch.
- ▶ Repeat procedure on all hinges **3**.

LWN/LR.x/V03.01//Auslieferung/2015-06-03/en

copyright by
LIEBHERR

9.31.5 Checking the function of the railing stabilization

Checking the eye bolt of the railing stabilization for tight fit

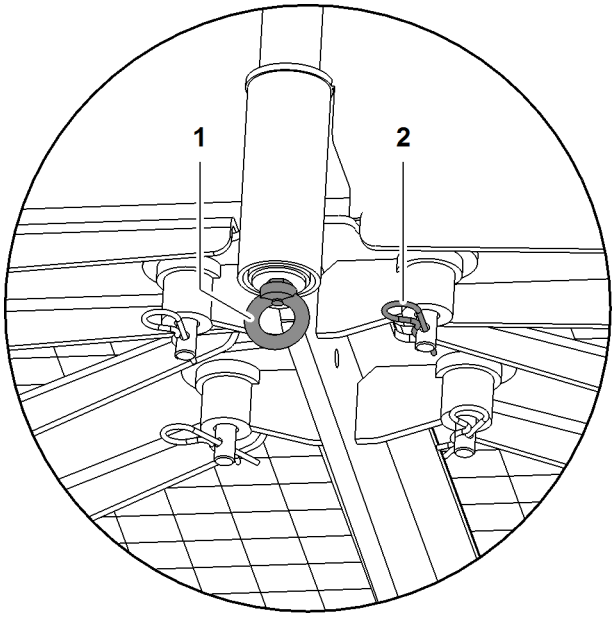

Fig. 5770: Checking the eye bolt of the railing stabilization for tight fit

1 Eye bolt for railing stabilization **2** Spring cotter pin

▶ Push screwdriver through eye bolt **1**.

▶ Turn eye bolt **1** clockwise.

If the eye bolt **1** can be turned:
▶ Tighten eye bolt **1**.

▶ Repeat procedure on all eye bolts **1**.

LWN/LR.x/V03.01//Auslieferung/2015-06-03/en

copyright by
LIEBHERR

Checking the availability of the spring cotter pin

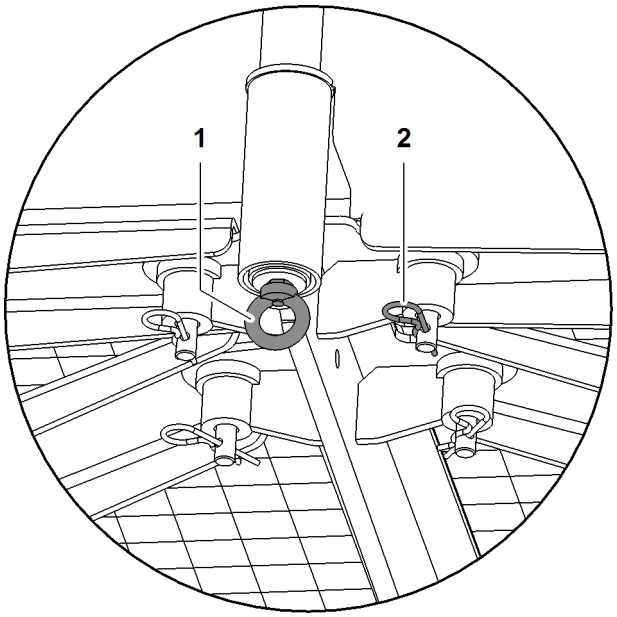

Fig. 5771: Checking the availability of the spring cotter pin

1 Eye bolt for railing stabilization **2** Spring cotter pin

▶ Checking the availability of the spring cotter pin **2**.

If no spring cotter pin **2** is available:

▶ Insert spring cotter pin **2**.

▶ Repeat procedure with all spring cotter pins **2**.

LWN/LR.x/V03.01//Auslieferung/2015-06-03/en

copyright by
LIEBHERR

9.32 Steel structure

9.32.1 Checking the machine steel structure for damage, cracks

DANGER
Operating the machine is not permitted if there is damage to the steel structure!
Structural breakdown.

▶ Operate machine exclusively with steel structure in perfect condition.

▶ Checking the machine steel structure for damage, cracks.

If cracks or damage is visible on the steel structure of the machine:
▶ Observe instructions for repairs on steel structure (For more information see: 9.32.2 Repairs on the steel structure, page 1886) .

Checking the weld seams and holes

The drawings for checking the weld seams and holes can be found in the “Technical information” volume.

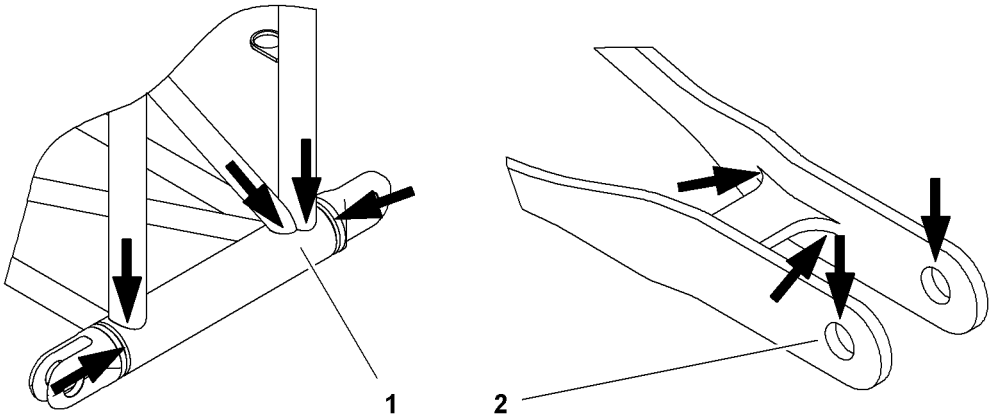

Fig. 5772: Excerpt from the drawings for checking the weld seams and holes

1 Weld seams **2** Holes

All weld seams and holes must be checked. The arrows denote the weld seams and holes that must be checked closely due to the high stresses placed on them.

DANGER
Weld seams are incorrectly or incompletely checked!
Structural breakdown.

▶ Check all weld seams.

▶ Check the entire weld seam.

▶ Clean dirt from the weld seams.

▶ Visually check the weld seams for cracks.

LWN/LR.x/V03.01//Auslieferung/2015-06-03/en

copyright by LIEBHERR

If a crack is found:

- ▶ Observe instructions for repairs on steel structure (For more information see: 9.32.2 Repairs on the steel structure, page 1886) .
- ▶ Check holes and slots (e.g. on connecting links) for wear, cracks and plastic deformations.

If a hole is damaged:

- ▶ Observe instructions for repairs on steel structure (For more information see: 9.32.2 Repairs on the steel structure, page 1886) .

9.32.2 Repairs on the steel structure

DANGER
Inadmissible, improper or unauthorized repairs on the steel structure!
Structural breakdown.

- ▶ Make sure that only the Liebherr service personnel or authorized trained personnel decides whether a repair on the steel structure is admissible. If necessary, contact Liebherr after sales service.
- ▶ Make sure that the repair instructions are requested from the Liebherr customer service and observed.
- ▶ Ensure that repairs to the steel structure are performed by Liebherr service personnel or authorized trained personnel only.

The steel structure is made of high-strength fine grained steel. Each heat treatment, e.g. welding, can alter the structure of the steel and reduce the component strength.

DANGER
Steel parts are welded to the structure without authorisation!
Structural breakdown.

- ▶ Additional parts may only be welded to the steel structure after written approval has been obtained from Liebherr-Werk Nenzing GmbH.

Repair welding requirements

DANGER
Poor welding quality!
Structural breakdown.

- ▶ Observe the international and national safety and accident prevention regulations and the “Principles for the testing of cranes by specialists and experts according to the accident prevention regulations "Cranes" BGV D6 and BGG 905" (formerly: VBG 9)”.
- ▶ Repair instructions, specifying the basic material and the relevant welding consumables and auxiliary agents, must be requested from Liebherr after sales service. These instructions must be observed.
- ▶ All necessary non-destructive tests must be carried out and documented.

Ensure that the following conditions are fulfilled:

- ❑ Qualified personnel are available.

LWN/LR.x/V03.01/Auslieferung/2015-06-03/en

copyright by LIEBHERR

- ❑ Liebherr service personnel who have passed the corresponding welding qualification tests laid down in EN 287-1 for the material and welding method in question are available.
- ❑ enterprises holding a major qualification certificate according to DIN 18800-7, DIN 15018 and DIN 4132 with the extension for cranes, crane tracks and the following high-strength and highest-strength fine-grained structural steel, have available:
  - Steel sheet S690QL1 W. No. 1.8988
  - Steel sheet S690QL W. No. 1.8928
  - Steel sheet S700MC W. No. 1.8974
  - Tubes S770QL W. No. 1.8938
  - Steel sheet S960QL W. No. 1.8933
  - Steel sheet S960MC W. No. -
- ❑ Manual arc welding certificate E (111) is available.
- ❑ experience in the repair of mobile and crawler cranes with the relevant materials and use of welding processes MAG (135).
- ❑ Repair welding must satisfy the requirements of EN 25817-B.

▶ Perform the repair welding in accordance with applicable regulations.

Note

▶ Request the necessary test loads and boom configurations from Liebherr after sales service.

▶ Subject the repaired component to a load test.

▶ Document the tests performed in the crane test log.

LWN/LR.x/V03.01//Auslieferung/2015-06-03/en

copyright by
LIEBHERR

9.33 Main boom

9.33.1 Check main boom base section, main boom head and main boom sections for damage and wear (cracks, notches, corrosion, plastic deformation, wear)

DANGER
Incorrect use of the machine with damaged main boom!
Structural breakdown.

▶ Exlusively use machine with main boom that is in perfect condition.

The steel structure of the main boom must undergo a thorough visual inspection according to the maintenance plan or as laid down in national regulations.

If the machine was subject to excess strain as the result of a severe impact or a large number of load cycles, the structural components must be examined immediately and the inspection intervals reduced.

Any cracks in the steel structure must be examined by qualified service personnel using the following testing procedures:

– magnetic powder test
– dye penetration test

The main boom base section, the main boom head and the main boom sections must also be checked for bent or damaged boom pipes of the welded structure.

▶ Check main boom base section, main boom head and main boom sections for damage and wear (cracks, notches, corrosion, plastic deformation, wear).

If the main boom base section, the main boom head or the main boom sections are not in perfect condition:
▶ Observe instructions for repairs on steel structure (For more information see: 9.32.2 Repairs on the steel structure, page 1886) .

LWN/LR.x/V03.01//Auslieferung/2015-06-03/en

copyright by
LIEBHERR

9.33.2 Boom base section: checking that the knuckle pins and locking elements fit tightly

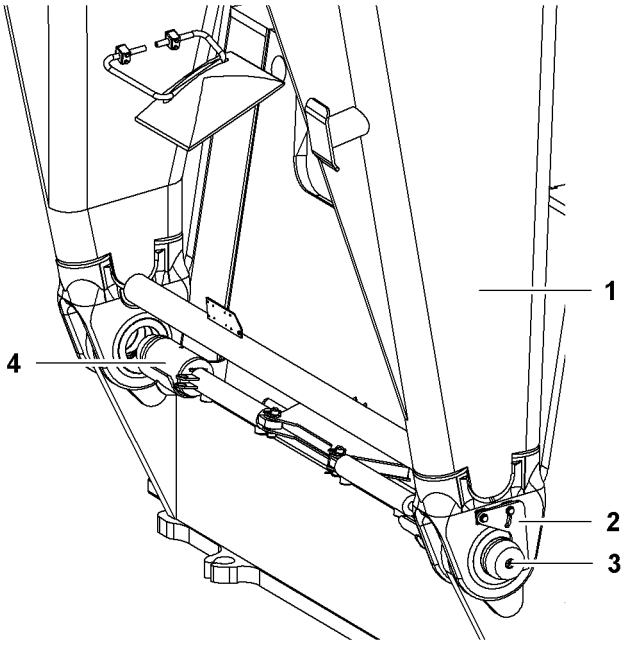

Fig. 5773: Knuckle pins and locking elements on main boom base section

1	Main boom base section	**3**	Grease nipple (2x)
2	Locking element (2x)	**4**	Knuckle pin (2x)

▶ Check that that the locking elements **2** and knuckle pins **4** fit tightly on both sides.

If the locking elements or knuckle pins are loose:
▶ Tighten the locking element **2** or knuckle pin **4**.

9.33.3 Boom base section: lubricating knuckle pins

Ensure that the following conditions are fulfilled:
❑ Grease gun from Liebherr tool kit is available and filled with correct grease (For more information see: 9.2.3 Lubrication chart, page 1802) .

LWN/LR.x/V03.01//Auslieferung/2015-06-03/en

copyright by
LIEBHERR

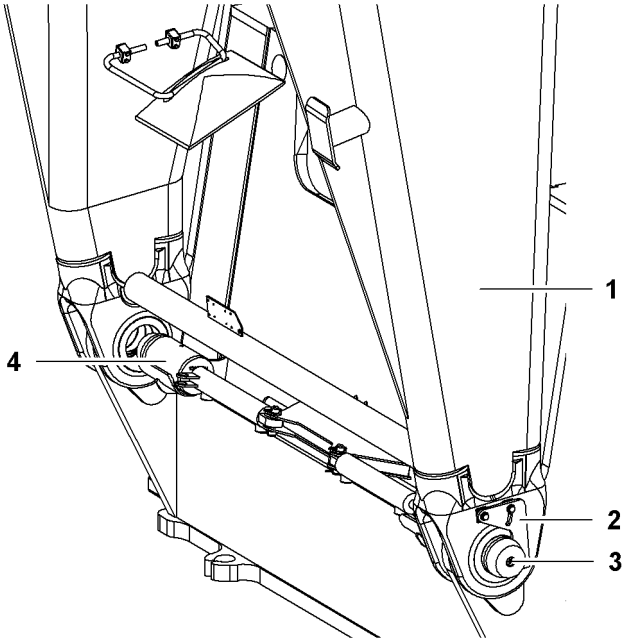

Fig. 5774: Knuckle pins and locking elements on main boom base section

1	Main boom base section	**3**	Grease nipple (2x)
2	Locking element (2x)	**4**	Knuckle pin (2x)

▶ Use the grease gun to press grease into the grease nipple **3** on both sides.

9.33.4 Boom base section or A-frame 1: checking the operation of the mechanical boom angle indicator

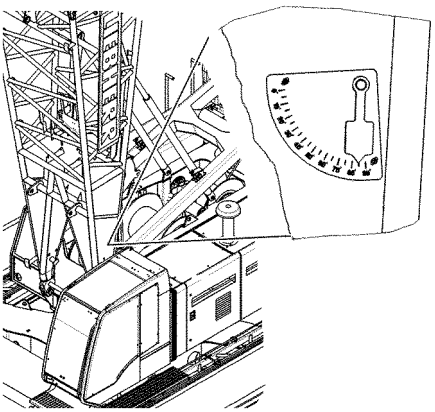

Fig. 5775: Mechanical boom angle indicator on boom base section or A-frame 1

▶ Checking the operation of the mechanical boom angle indicator on the boom base section or A-frame 1

If the mechanical boom angle indicator is loose:
▶ Secure the mechanical boom angle indicator.

If the needle cannot move easily:
▶ Lubricate the needle mount.

LWN/LR.x/V03.01//Auslieferung/2015-06-03/en

copyright by
LIEBHERR

9.33.5 Checking the main boom head for function and damage

Check screw connections and pin connections for tight fit

▶ Check screw connections and pin connections for tight fit.

If screw connections or pin connections are loose:
▶ tighten screw connections and pin connections.

Checking rope fixing points for tears

▶ Check rope fixing points for tears.

If the rope fixing point shows tears:
▶ do not use main boom.

▶ Contact Liebherr customer service.

Checking that rope protection and locking springs are present and not damaged

▶ Check that rope protection and locking springs are present and not damaged.

If the rope protection or the locking springs are damaged or not in place:
▶ do not use main boom.

▶ Contact Liebherr customer service.

9.33.6 Checking the anemometer for tight fit and function

▶ Check anemometer for tight fit.

If anemometer is loose:
▶ attach anemometer.

With perfect functioning of the anemometer, the current wind speed is displayed on the *Operation* screen on the monitor.

Fig. 5776: Screen section Wind speed

▶ Check wind speed on the *Operation* screen on the monitor.

If a wind speed of 0 m/s (0 ft/s) is permanently displayed on the monitor:
▶ Check anemometer for mechanical and electronic damage.

LWN/LR.x/V03.01//Auslieferung/2015-06-03/en

copyright by
LIEBHERR

9.33.7 Checking the auxiliary jib for function and damage

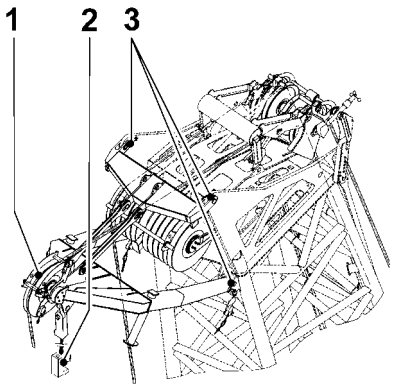

Fig. 5777: Auxiliary jib

1 Rope pulleys
2 Hoist limit switch
3 Pins and locking springs

Check screw connections and pin connections for tight fit

▶ Check screw connections and pin connections for tight fit.

If screw connections or pin connections are loose:
▶ tighten screw connections and pin connections.

Checking rope fixing points for tears

▶ Check rope fixing points for tears.

If the rope fixing point shows tears:
▶ Do not use auxiliary jib.

▶ Contact Liebherr customer service.

Checking that rope protection and locking springs are present and not damaged

▶ Check that rope protection and locking springs are present and not damaged.

If the rope protection or the locking springs are damaged or not in place:
▶ Do not use auxiliary jib.

▶ Contact Liebherr customer service.

LWN/LR.x/V03.01//Auslieferung/2015-06-03/en

copyright by
LIEBHERR

9.34 Jib

9.34.1 Checking the jib base section, jib head and jib sections for damage and wear

DANGER
Machine operation with damaged jib is prohibited!
Structural failure.

▶ Operate machine exclusively with jib in perfect condition.

The steel structure of the jib must undergo a thorough visual inspection according to the maintenance plan or as laid down in national regulations.

If the machine was subject to excessive stress as the result of a severe impact or a large number of load cycles, the bearing components must be examined immediately and the inspection intervals shortened.

Any cracks in the steel structure must be examined by authorized service personnel.

This can be done using the following testing procedures:
– Magnetic particle inspection
– Dye penetrant inspection

The jib components should also be checked for bent or damaged tubing of the welded structure.

▶ Checking the jib base section, jib head and jib sections for damage and wear (cracks, notches, corrosion, plastic deformation, wear).

If the jib base section, the jib head or the jib sections are not in perfect condition:
▶ Observe instructions for repairs on steel structure (For more information see: 9.32.2 Repairs on the steel structure, page 1886) .

9.34.2 Filling the accumulators for the tilting-back supports on the jib

Make sure the following prerequisites are met:
❑ Liebherr tool kit is available.
❑ The machine operator is in the cabin.
❑ An assistant is available.
❑ Cabin is tilted downwards.
❑ Basic machine is next to the jib base section.
❑ Diesel engine is turned off.

LWN/LR.x/V03.01//Auslieferung/2015-06-03/en

copyright by LIEBHERR

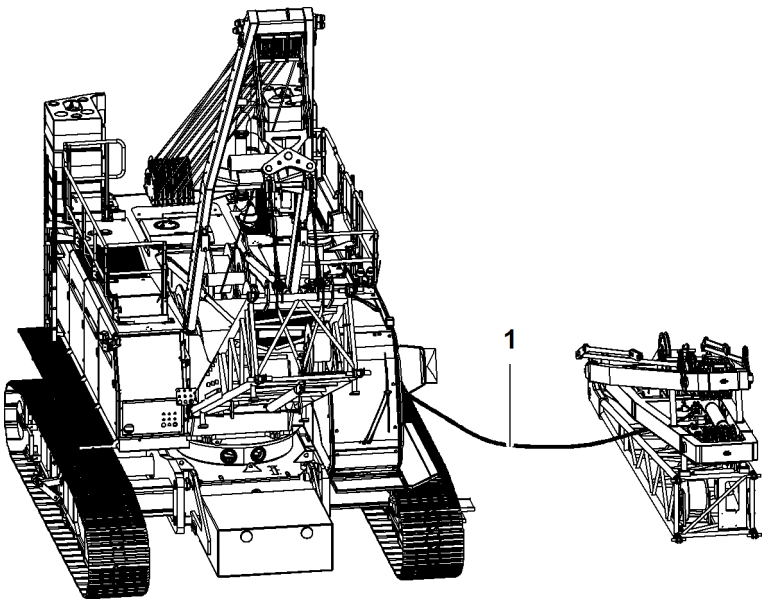

Fig. 5778: Overview filling the accumulator for the tilting-back supports on the jib

1 Hydraulic hose

Preparing the hydraulic hose

Connections of the hydraulic hose:
– Quick-action coupling
– Hydraulic connection with gate valve

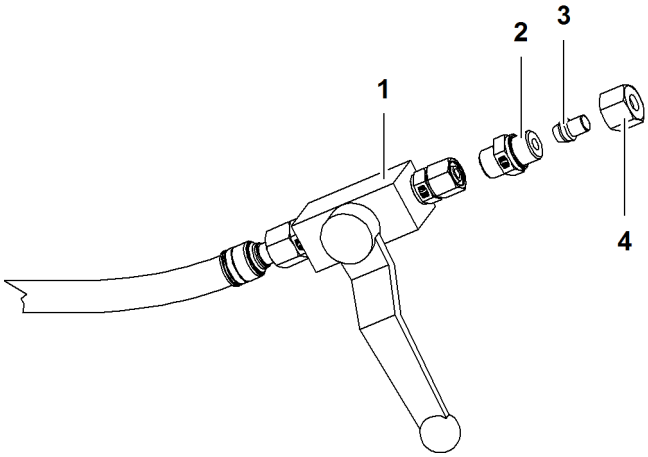

Fig. 5779: Hydraulic connection with gate valve

1	Gate valve *hydraulic hose*	**3**	Sealing element
2	Section	**4**	Nut

▶ Undo nut **4**.

▶ Remove sealing element **3** and section **2**.
▷ Hydraulic hose is prepared.

LWN/LR.x/V03.01//Auslieferung/2015-06-03/en

copyright by
LIEBHERR

Preparing the valve block of the jib base section

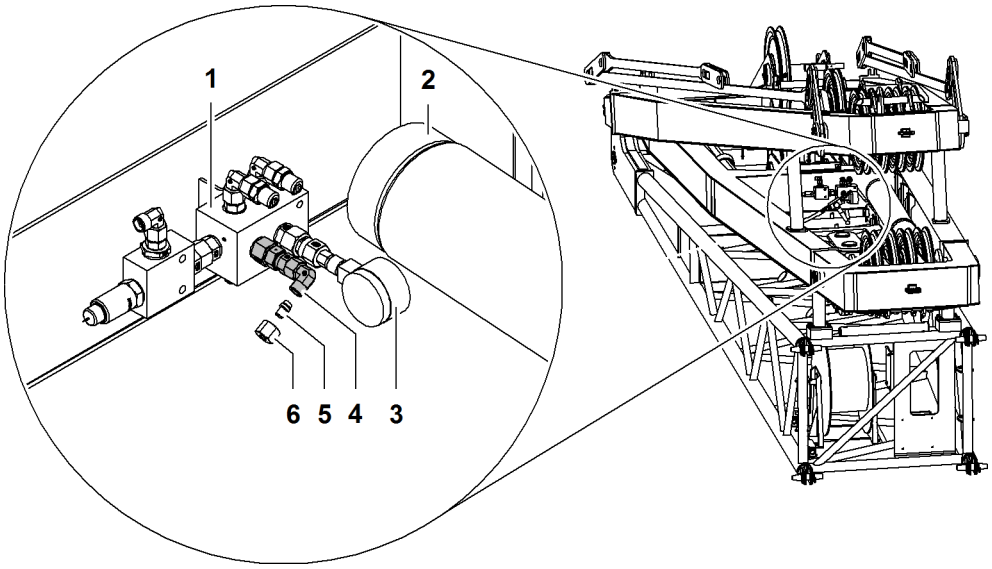

Fig. 5780: Preparing the valve block of the jib base section

1	Valve block *jib base section*	**4**	Connection
2	Accumulator	**5**	Sealing element
3	Pressure gauge	**6**	Nut

▶ Undo nut **6**.

▶ Remove sealing element **5**.
▷ Valve block *jib base section* is prepared.

LWN/LR.x/V03.01//Auslieferung/2015-06-03/en

copyright by
LIEBHERR

Establishing the connection between the machine and the jib base section

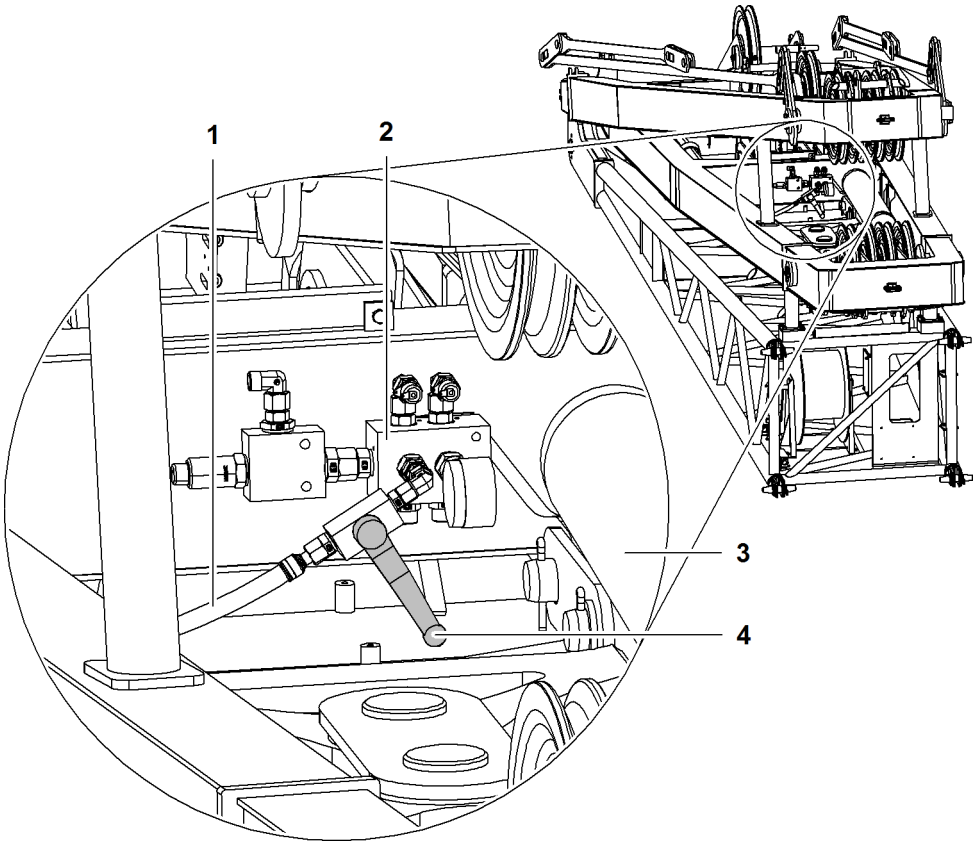

Fig. 5781: Installing the hydraulic hose on the valve block of the jib base section

1	Hydraulic hose	**3**	Accumulator
2	Valve block *jib base section*	**4**	Gate valve *hydraulic hose*

▶ Close gate valve *hydraulic hose* **4**.

▶ Connect hydraulic hose **1** with valve block *jib base section* **2**.

LWN/LR.x/V03.01//Auslieferung/2015-06-03/en

copyright by
LIEBHERR

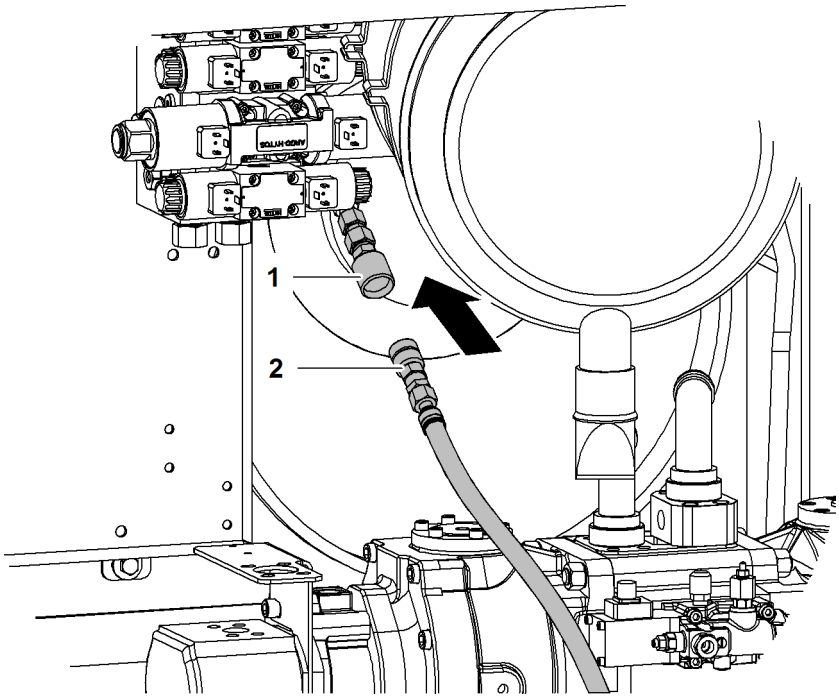

Fig. 5782: Hydraulic valve plate behind the front left uppercarriage door

1	Connection	**2**	Quick-action coupling *hydraulic hose*

▶ Open front uppercarriage door on the left.

▶ Remove protective cover from connection **1**.

▶ Remove protective cover from quick-action coupling *hydraulic hose* **2**.

▶ Connect quick-action coupling *hydraulic hose* **2** with connection **1**.
▷ Connection between the machine and the jib base section established.

▶ Switch on the diesel engine.

Filling the accumulator

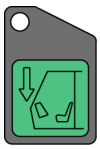

▶ Press and hold the button *Tilt cabin down* on control panel *X11*.

NOTICE
Insufficient pressure in the accumulator of the hydraulic tilting-back supports!
Risk of damage to components.

▶ Ensure that the specified pressure for the current ambient temperature is set in the accumulator.

The table “Specified pressure in accumulator of hydraulic tilting-back supports” is located on A-frame3.

▶ A helper carefully opens the gate valve *hydraulic hose* until the specified pressure is indicated on the pressure gauge of the jib base section.

When the specified pressure is reached:
▶ Close gate valve *hydraulic hose*.

LWN/LR.x/V03.01//Auslieferung/2015-06-03/en

copyright by
LIEBHERR

- ▶ Release the *Tilt cabin down* button on control panel *X11*.
  - ▷ Specified pressure in the accumulator of the hydraulic tilting-back supports set.

Note
Displayed pressure may drop after a short while!

Liebherr recommends:
- ▶ Check the pressure in the accumulator after 1 to 2 minutes and increase the pressure again if applicable.

Note
Overpressure in the accumulator!

Liebherr recommends:
- ▶ Reduce the pressure.
- ▶ Release the button *Tilt cabin down* on control panel *X11* when the gate valve *hydraulic hose* is open.

Note
Hydraulic hose under pressure!

Liebherr recommends:
- ▶ Let go of the button *Tilt cabin down* on control panel *X11* and briefly open gate valve *hydraulic hose*. The hydraulic hose is now without pressure.

Note
Hydraulic hose is filled with hydraulic oil!

Liebherr recommends:
- ▶ Place hydraulic hose with hydraulic connection with gate valve over a container and carefully open the gate valve *hydraulic hose*.

- ▶ Turn off diesel engine.
- ▶ Take off hydraulic hose on both ends.
- ▶ Dispose of hydraulic oil properly.
- ▶ Refit the nut and sealing element on the valve block of the jib base section.
- ▶ Refit nut, section and sealing element on the hydraulic hose.
- ▶ Replace protective cover on quick-action coupling *hydraulic hose*.
- ▶ Replace protective cap of the connection on the hydraulic valve plate.
- ▶ Close uppercarriage door.

LWN/LR.x/V03.01//Auslieferung/2015-06-03/en

copyright by
LIEBHERR

9.34.3 Checking locking flaps for ease of movement

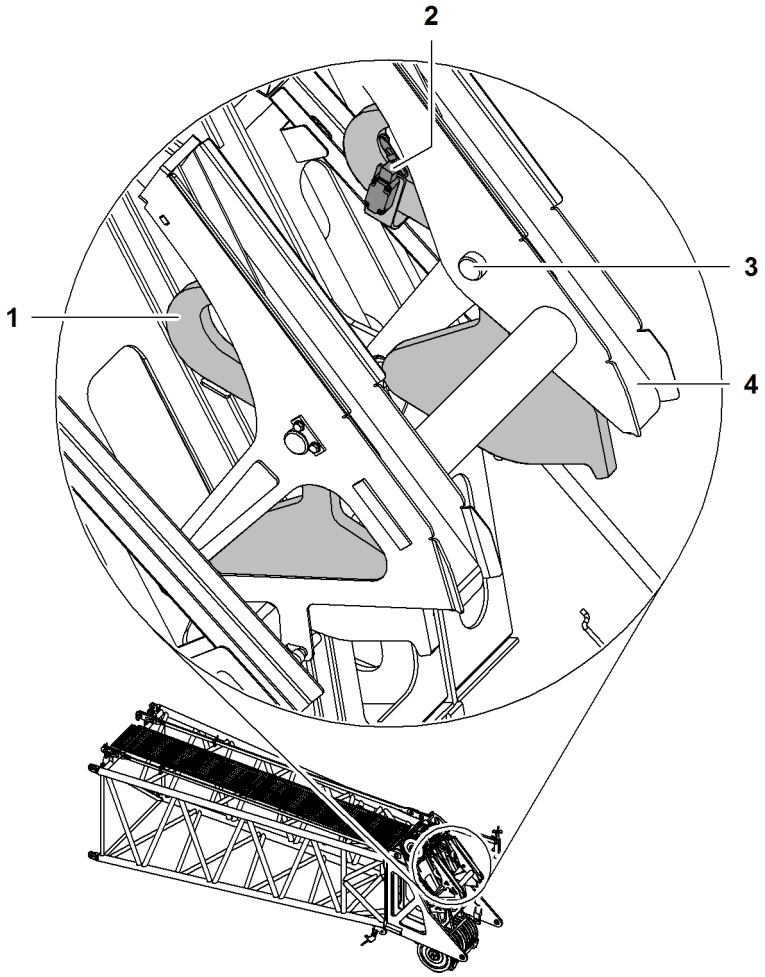

Fig. 5784: Checking locking flaps for ease of movement

1	Locking flaps (2x) for rigid jib tilting-back supports	**3**	Axis locking flap
2	Limit switch (2x) for rigid jib tilting-back supports	**4**	Guide rail (2x) for rigid jib tilting-back supports

If the locking flaps are not adjusted by their inherent weight, erection of the main boom is not possible.

▶ Check locking flaps **1** for ease of movement.

Note
Locking flaps are not easy to move!

Liebherr recommends:
▶ Work on axis **3** with sandpaper.

If the locking flaps do not move easily:
▶ uninstall axis **3** and lubricate.

LWN/LR.x/V03.01//Auslieferung/2015-06-03/en

copyright by
LIEBHERR

9.34.4 Jib head: Checking wheels for ease of movement

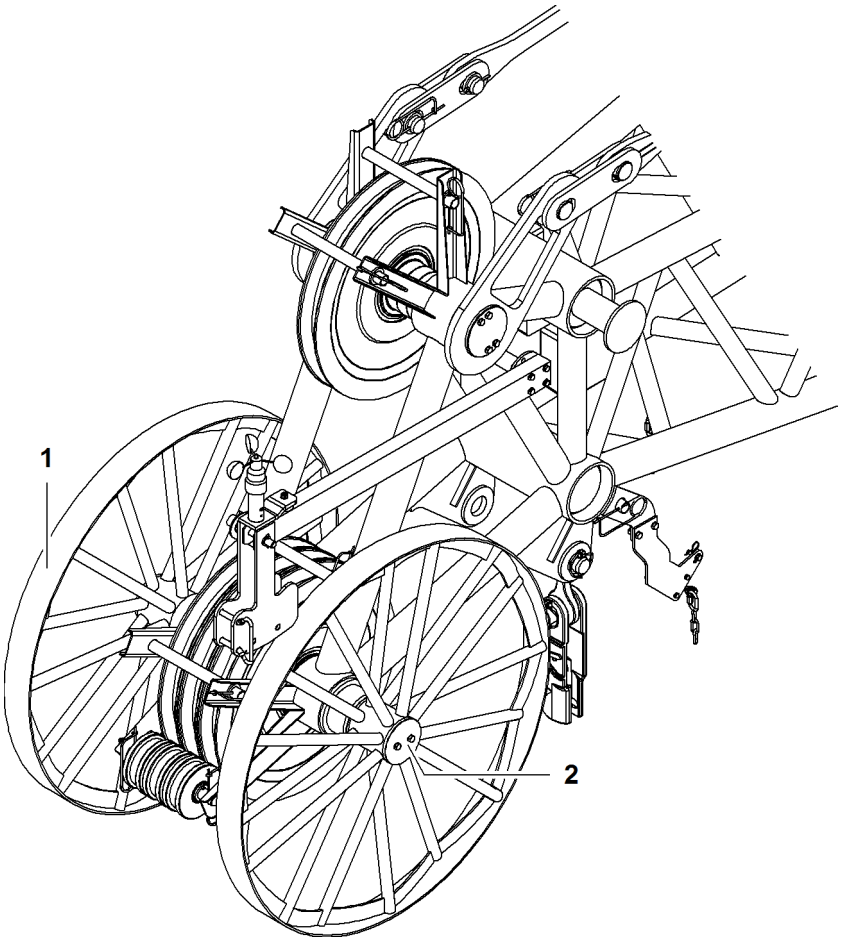

Fig. 5785: Jib head: Checking wheels for ease of movement

1 Wheel (2x) **2** Wheel bearing

▶ Check jib head wheels **1** for free running.

Note
Wheels do not move easily!

Liebherr recommends:
▶ Work on polymer bearings with sandpaper.

If the wheels do not move easily:
▶ Undo bearing **2** screws.

▶ Pull wheels off of polymer bearing.

▶ Grind out polymer bearing.

▶ Grease polymer bearing.

▶ Press wheels onto polymer bearing.

9.34.5 Checking the anemometer for tight fit and function

▶ Check anemometer for tight fit.

LWN/LR.x/V03.01//Auslieferung/2015-06-03/en

copyright by
LIEBHERR

If anemometer is loose:
▶ attach anemometer.

With perfect functioning of the anemometer, the current wind speed is displayed on the *Operation* screen on the monitor.

Fig. 5786: Screen section Wind speed

▶ Check wind speed on the *Operation* screen on the monitor.

If a wind speed of 0 m/s (0 ft/s) is permanently displayed on the monitor:
▶ Check anemometer for mechanical and electronic damage.

9.34.6 Jib base section: Checking screw connections and pin connections for tight fit, checking that rope protection and locking springs are in place and undamaged

Check screw connections and pin connections for tight fit

▶ Check screw connections and pin connections for tight fit.

If screw connections or pin connections are loose:
▶ tighten screw connections and pin connections.

Checking that rope protection and locking springs are present and not damaged

▶ Check that rope protection and locking springs are present and not damaged.

If the rope protection or the locking springs are damaged or not in place:
▶ do not use jib.

▶ Contact Liebherr customer service.

LWN/LR.x/V03.01//Auslieferung/2015-06-03/en

copyright by
LIEBHERR

9.35 A-frame1

A-frame 1 and its components must be checked for damage and that it is working correctly.

DANGER
Damaged A-frame 1!
Structural breakdown.

▶ Ensure that A-frame 1 and its components are checked by a specialist at least once a year.

As use of the machine increases, so the test cycle becomes shorter:

▶ Ensure that A-frame 1 and its components are checked by a specialist at more regular intervals.

▶ Document all results.

▶ Do not use the A-frame 1 under any circumstances unless it and its component parts are in perfect condition.

9.35.1 Checking A-frame 1

▶ Check A-frame 1 for cracks on the traverse bracings and for deformation.

If A-frame 1 shows signs of cracks on the traverse bracings or deformation:

▶ Switch off machine.

▶ Contact Liebherr after sales service.

9.35.2 Lubricating the bearings on A-frame 1

All grease nipples on A-frame 1 are present on both sides and can be accessed from the interior side.

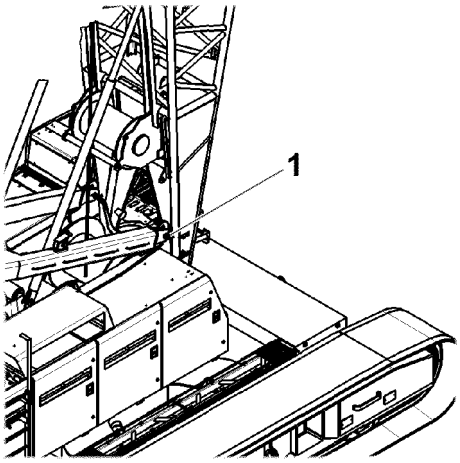

Fig. 5787: Lubricating the bearings on A-frame 1

1 Bearings on A-frame 1

Make sure the following prerequisites are met:

❑ Grease gun from Liebherr tool kit is available and filled with correct grease (For more information see: 9.2.3 Lubrication chart, page 1802) .

LWN/LR.x/V03.01//Auslieferung/2015-06-03/en

copyright by
LIEBHERR

- ▶ Remove protective covers.
- ▶ Use the grease gun to press grease into the grease nipple on both sides.
- ▶ Put on protective covers.

9.35.3 Lubricating the bearings on the A-frame1 cylinder

The grease nipples are present on both sides.

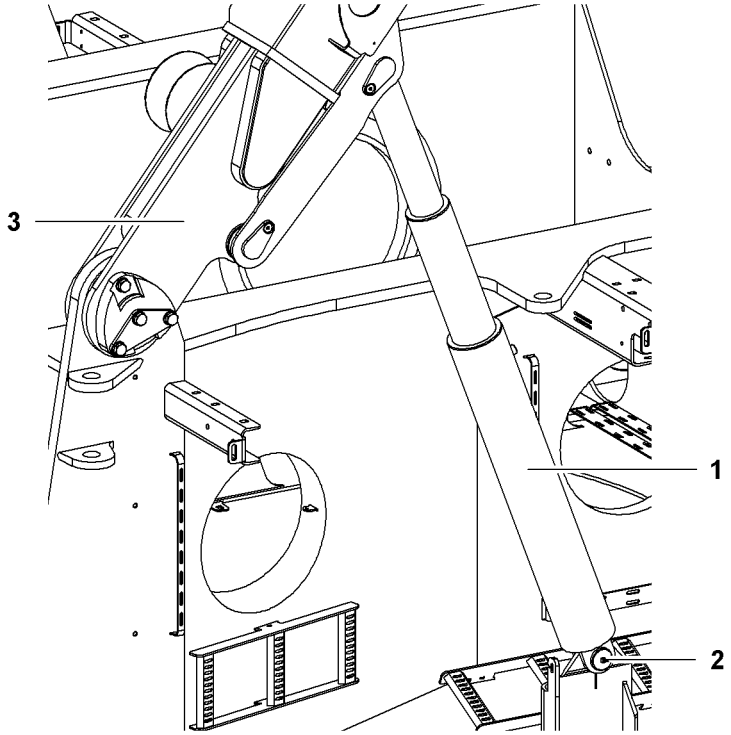

Fig. 5788: Lubricating the bearings on the A-frame1 cylinder

1	A-frame1 cylinder	**3**	A-frame1
2	Grease nipple		

Make sure the following prerequisites are met:

- ❑ Grease gun from Liebherr tool kit is available and filled with correct grease (For more information see: 9.2.3 Lubrication chart, page 1802) .

- ▶ Use the grease gun to press grease into the grease nipple **2** on both sides.

LWN/LR.x/V03.01//Auslieferung/2015-06-03/en

copyright by
LIEBHERR

9.36 Tilting-back supports

9.36.1 Checking the pressure in the tilting-back support piston area

Make sure the following prerequisites are met:
- ❑ The 400 bar (5,801.48 psi) pressure gauge from the Liebherr tool kit is available.
- ❑ The machine operator is in the cab.
- ❑ The assistant is familiar with the work.
- ❑ The machine hydraulic oil is at operating temperature (approx50 °C (122 °F) to 60 °C (140 °F)).
- ❑ The air intake hose between the filter housing and the exhaust turbocharger is in good condition.
- ❑ No load is on the hook.
- ❑ Diesel engine is switched on.
- ❑ *Extend tilting-back support cylinder* switch on control panel *X12* is preselected.
- ❑ The main boom is raised to approximately 75°.
- ❑ The safety lever in the cabin has been lowered.

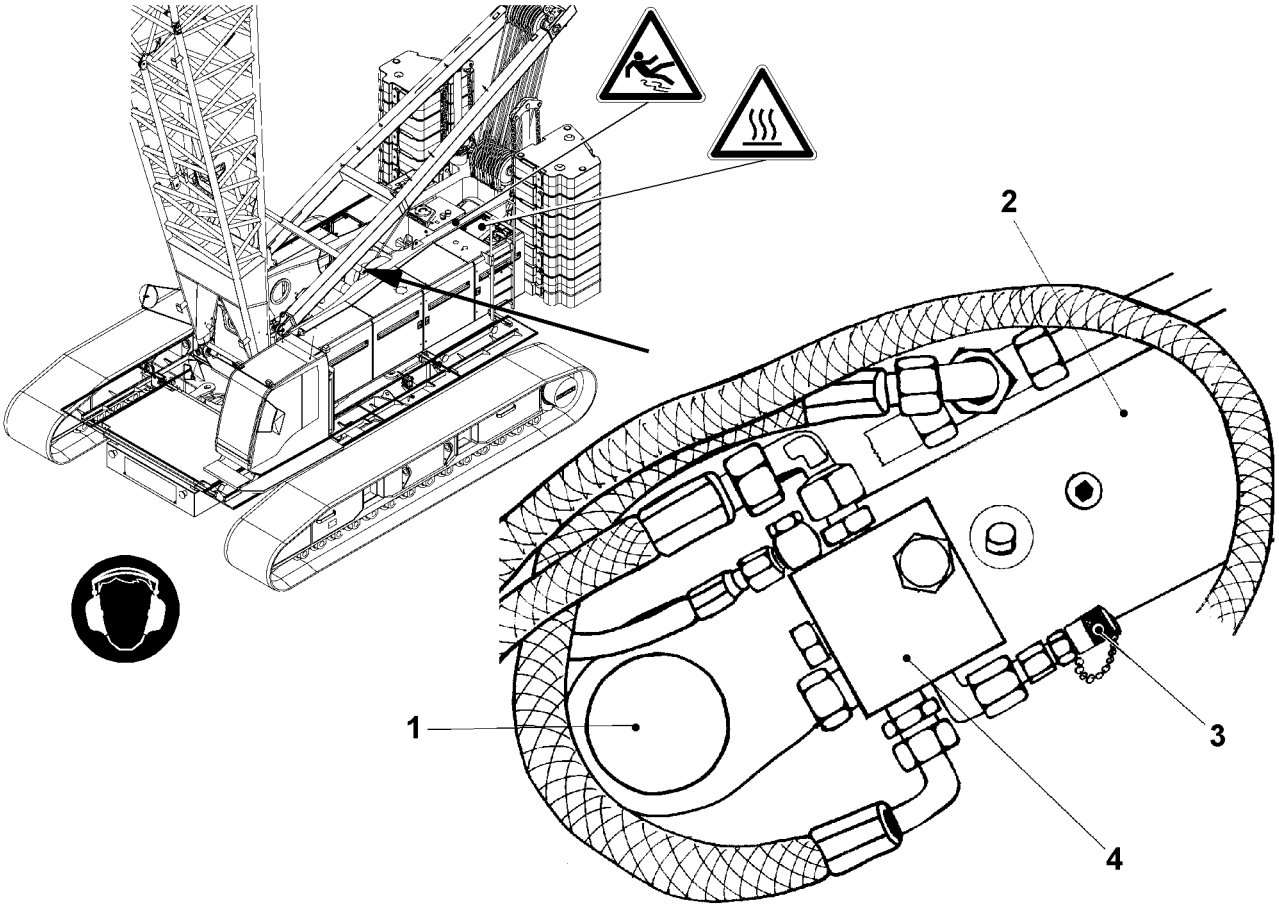

LWN/LR.x/V03.01//Auslieferung/2015-06-03/en

Fig. 5789: Checking the pressure in the tilting-back support piston area

1	Tilting-back support bolting	**3**	Measuring connection for pressure measurement
2	Tilting-back support	**4**	Valve block

copyright by LIEBHERR

▶ To relieve the strain on the tilting-back supports **2**: lower the main boom until the tilting-back supports **2** are in the middle of the guide rails.

WARNING
Hot and slippery surfaces!
Risk of falling off the uppercarriage.

▶ Only touch hot surfaces with suitably protected body parts.

▶ Secure yourself against falling.

▶ Remove the protective cover on the measuring connection **3**.

The pressure in the tilting-back support piston area must correspond to the value stipulated in the chart. Maximum deviation of ±20 % is admissible.

Machine type	Nominal value
LR 1002	90 bar 1,305.33 psi
LR 1003	90 bar 1,305.33 psi
LR 1004	150 bar 2,175.56 psi
LR 1005	132 bar 1,914.49 psi
LR 1006	132 bar 1,914.49 psi

Tab. 595: Stipulated pressure in the tilting-back support piston area

▶ Connect the pressure gauge to the measuring connection **3**.
▷ The gauge displays the pressure.

DANGER
Tilting-back support is used with excessive/inadequate pressure in the piston area!
Wrong calculation of load moment limiter, toppling of machine, structural failure.

▶ Switch off machine.

▶ Contact Liebherr after sales service.

If the pressure displayed is outside of the permitted range:
▶ Switch off the machine and contact Liebherr after sales service.

▶ Remove the pressure gauge.

▶ Fit the protective cover to the measuring connection **3** again.

A measurement must be taken on each tilting-back support cylinder.

▶ Repeat the measurement on the opposite side.

LWN/LR.x/V03.01//Auslieferung/2015-06-03/en

copyright by
LIEBHERR

9.37 Steel pendant straps

Steel pendant straps are sensitive components and must be checked for proper functioning and/or damage.

DANGER
Damaged steel pendant straps!
Structural breakdown.

- ▶ Make sure that a specialist checks all steel pendant straps at least once a year.

As use of the machine increases, so the test cycle becomes shorter:

- ▶ Make sure that a specialist checks all steel pendant straps additionally.
- ▶ Document all results.
- ▶ Only use perfectly functioning steel pendant straps.
- ▶ Replace damaged or faulty steel pendant straps with new Liebherr steel pendant straps.

NOTICE
Inadmissible welding on steel pendant straps!
Damage to steel pendant straps.

- ▶ Do not weld on steel pendant straps.

9.37.1 Checking steel pendant straps and pins for damage and wear and check that locking springs and split pins are present

Checking steel pendant straps for damage and wear

- ▶ Check steel pendant straps for damage and wear (cracks, notches, corrosion, deformation, etc.).

If the steel pendant straps show damage or wear:

- ▶ replace steel pendant straps.
- ▶ Contact Liebherr after sales service.

Checking the pins for wear and damage

- ▶ Check the pins for damage and wear (cracks, notches, corrosion, deformation, etc.).

If the pins are damaged or show signs of wear:

- ▶ Replace pins.
- ▶ Contact Liebherr after sales service.

Checking the locking elements for wear and damage

- ▶ Check the locking elements (washers, nuts, springs) for damage and wear (cracks, notches, corrosion, deformation, etc.).

LWN/LR.x/V03.01//Auslieferung/2015-06-03/en

copyright by
LIEBHERR

If the locking elements (washers, nuts, springs) are damaged or show signs of wear:

- ▶ Replace locking elements.
- ▶ Contact Liebherr after sales service.

9.37.2 Checking the ease of movement of pin connections in the entire pendant strap strand

- ▶ Check ease of movement of pin connections in the entire pendant strap strand.

If pin connections no longer move easily:

- ▶ Restore ease of movement of pin connections.
- ▶ Protect steel pendant straps, connecting links and pins from corrosion (For more information see: 9.37.3 Protecting steel pendant straps, connecting links and pins from corrosion, page 1907) .

9.37.3 Protecting steel pendant straps, connecting links and pins from corrosion

NOTICE
Corrosion of steel pendant straps, connecting links and pins!
Damage to steel pendant straps, connecting links and pins.

- ▶ Make sure that corrosion protection of steel pendant straps, connecting links and pins is ensured.

Due to high strain, pay special attention to the anticorrosive coating of the contact surfaces between steel pendant strap, pin and connecting link.

- ▶ Lubricate steel pendant straps, connecting links and pins or spray with anti-corrosion spray.

9.37.4 Checking connecting links for damage and wear

- ▶ Check the connecting links for damage and wear (cracks, notches, corrosion, deformation, etc.).

If the connecting links are damaged or show signs of wear:

- ▶ Replace connecting links.
- ▶ Contact Liebherr after sales service.

9.37.5 Checking tension load cells for damage and wear, checking electricity connections for tight fit

- ▶ Check tension load cells for damage and wear (cracks, notches, corrosion, deformation, etc.).

If tension load cells show damage or wear:

- ▶ Replace tension load cells.
- ▶ Contact Liebherr customer service.
- ▶ Check electricity connections of tension load cells for tight fit.

LWN/LR.x/V03.01//Auslieferung/2015-06-03/en

copyright by
LIEBHERR

If electricity connections of load tension cells are loose:
▶ tighten electricity connections of load tension cells.

LWN/LR.x/V03.01//Auslieferung/2015-06-03/en

copyright by
LIEBHERR

9.38 Carbon-fibre pendant straps

CF pendant straps are sensitive components and must be checked for proper functioning and/or damage.

DANGER
Damaged CF pendant straps!
Structural breakdown.

- ▶ Ensure that a specialist checks all CF pendant straps at least once a year.

As use of the machine increases, so the test cycle becomes shorter:

- ▶ Ensure that a specialist checks all CF pendant straps additionally.
- ▶ Document all results.
- ▶ Only use perfectly functioning CF pendant straps.
- ▶ Replace damaged or faulty CF pendant straps with new Liebherr CF pendant straps.

The permanent operating temperature of the CF pendant straps is -40 °C (-40 °F) to 80 °C (176 °F).

For short periods (around 10 minutes) temperatures up to 120 °C (248 °F) are permissible.

In a steam-saturated atmosphere a temperature of 80 °C (176 °F) should not be exceeded for a prolonged period.

NOTICE
Inadmissible welding on CF pendant straps!
Damage to CF pendant straps.

- ▶ Do not weld on CF pendant straps.

The fibres themselves provide long-term service. Adjacent components will provide long-term service if maintained, handled and used correctly.

Since 04/2010 a new generation (Generation B) of carbon-fibre pendant straps has been available.

LWN/LR.x/V03.01//Auslieferung/2015-06-03/en

copyright by
LIEBHERR

Fig. 5790: Generation A and generation B of the CF pedant straps

A Generation A of carbon-fibre pendant straps

B Generation B of carbon-fibre pendant straps

Maintenance of all carbon-fibre pendant straps is identical.

9.38.1 Checking CF pendant straps and pins for damage and wear and check that locking springs and split pins are present

Checking CF pendant straps for wear of the protective coating and/or wire mesh hose and checking for damage to fibers

The protective sheath or wire mesh hose may be damaged by incorrect use or by being pushed against something.

Fig. 5791: Damage to the protective sheath

The CF pendant straps may be temporarily strained.

LWN/LR.x/V03.01//Auslieferung/2015-06-03/en

▶ Check CF pendant straps for wear of the protective coating and/or wire mesh hose and check for damage to fibers.

If the underlying circumferential windings are undamaged:
▶ Contact Liebherr after sales service.

A repair kit is available from Liebherr after sales service if the protective sheath of carbon-fiber pendant straps needs repairing.

If the CF pendant straps show damaged fibers:
▶ Replace CF pendant straps.

▶ Contact Liebherr after sales service.

Checking the bushes of CF pendant straps

Fig. 5792: Parallel flanges

The bushes must be circular on the inside and flat on the outside.

▶ Before assembly bushes must always be checked with a caliper gage to ensure that the flanges are parallel.

If the flanges on the bushes are not parallel:
▶ Replace CF pendant straps.

▶ Contact Liebherr after sales service.

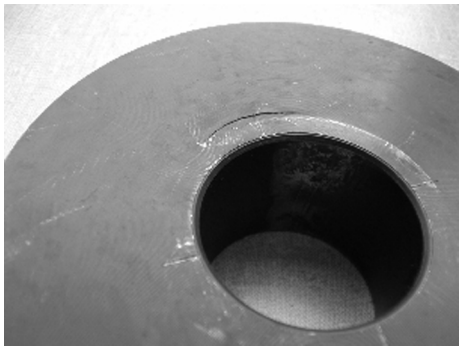

Fig. 5793: Crack on a bush

▶ Before assembly, bushes must always be checked for cracks, corrosion (fretting corrosion) and deformation.

LWN/LR.x/V03.01//Auslieferung/2015-06-03/en

copyright by LIEBHERR

If bushes are showing signs of cracks, corrosion (fretting corrosion) or deformation:
▶ Replace CF pendant straps.

▶ Contact Liebherr after sales service.

Checking pins for damage and wear

▶ Check pins for damage and wear (cracks, notches, corrosion, deformation, etc.).

If pins show damage or wear:
▶ Replace pins.

▶ Contact Liebherr after sales service.

Checking locking elements for damage and wear

▶ Check locking elements (washer, nut, spring) for damage and wear (cracks, notches, corrosion, deformation, etc.).

If the locking elements (washers, nuts, springs) are damaged or show signs of wear:
▶ Replace locking elements.

▶ Contact Liebherr after sales service.

9.38.2 Checking the ease of movement of pin connections in the entire pendant strap strand

▶ Check ease of movement of pin connections in the entire pendant strap strand.

If pin connections no longer move easily:
▶ Restore ease of movement of pin connections.

▶ Protect CF pendant strap bushes, connecting links and pins from corrosion (For more information see: 9.38.3 Protecting CF pendant strap bushes, connecting links and pins from corrosion, page 1912) .

9.38.3 Protecting CF pendant strap bushes, connecting links and pins from corrosion

NOTICE
Corrosion of CF pendant strap bushes, connecting links and pins!
Damage to CF pendant strap bushes, connecting links and pins.

▶ Make sure that corrosion protection of CF pendant strap bushes, connecting links and pins is ensured.

Due to high strain, pay special attention to the anticorrosive coating of the contact surfaces between the bushes of the CF pendant strap, pin and connecting link.

▶ Lubricate CF pendant strap bushes, connecting links and pins or spray with anti-corrosion spray.

LWN/LR.x/V03.01//Auslieferung/2015-06-03/en

copyright by LIEBHERR

9.38.4 Checking connecting links for damage and wear

▶ Check connecting links for damage and wear (cracks, notches, corrosion, deformation, etc.).

If the connecting links are damaged or show signs of wear:
▶ Replace connecting links.

▶ Contact Liebherr after sales service.

9.38.5 Checking tension load cells for damage and wear, checking electricity connections for tight fit

▶ Check tension load cells for damage and wear (cracks, notches, corrosion, deformation, etc.).

If tension load cells show damage or wear:
▶ Replace tension load cells.

▶ Contact Liebherr customer service.

▶ Check electricity connections of tension load cells for tight fit.

If electricity connections of the load tension cells are loose:
▶ tighten electricity connections of load tension cells.

LWN/LR.x/V03.01//Auslieferung/2015-06-03/en

copyright by
LIEBHERR

9.39 Pendant ropes

9.39.1 Check pendant ropes and pins for damage and wear and check that locking springs and cotter pins are present (cracks, notches, corrosion, plastic deformation, wear, lubrication, etc.)

Checking pendant ropes for damage and wear

▶ Check pendant ropes for damage and wear (cracks, notches, corrosion, deformation, etc.).

If pendant ropes show damage or wear:
▶ Replace pendant ropes.

▶ Contact Liebherr customer service.

Checking pins for damage and wear

▶ Check pins for damage and wear (cracks, notches, corrosion, deformation, etc.).

If pins show damage or wear:
▶ Replace pins.

▶ Contact Liebherr customer service.

Checking locking elements for damage and wear

▶ Check locking elements (washer, nut, spring) for damage and wear (cracks, notches, corrosion, deformation, etc.).

If locking elements (washer, nut, spring) show damage or wear:
▶ Replace locking elements.

▶ Contact Liebherr customer service.

9.39.2 Protecting pendant ropes, connecting links and pins from corrosion

NOTICE
Corrosion of pendant ropes, connecting links and pins!
Damage to pendant ropes, connecting links and pins.

▶ Make sure that corrosion protection of pendant ropes, connecting links and pins is ensured.

Due to high strain, pay special attention to the anticorrosive coating of the contact surfaces between pendant rope, pin and connecting link.

▶ Lubricate pendant ropes, connecting links and pins or spray with anti-corrosion spray.

LWN/LR.x/V03.01//Auslieferung/2015-06-03/en

copyright by
LIEBHERR

9.39.3 Checking connecting links for damage and wear

▶ Check connecting links for damage and wear (cracks, notches, corrosion, deformation, etc.).

If connecting links show damage or wear:

▶ Replace connecting links.

▶ Contact Liebherr customer service.

LWN/LR.x/V03.01//Auslieferung/2015-06-03/en

copyright by
LIEBHERR

9.40 Counterweight

9.40.1 Checking the screws of the rear counterweight tie-down for tight fit (with exception of LR 1001.xx.xx)

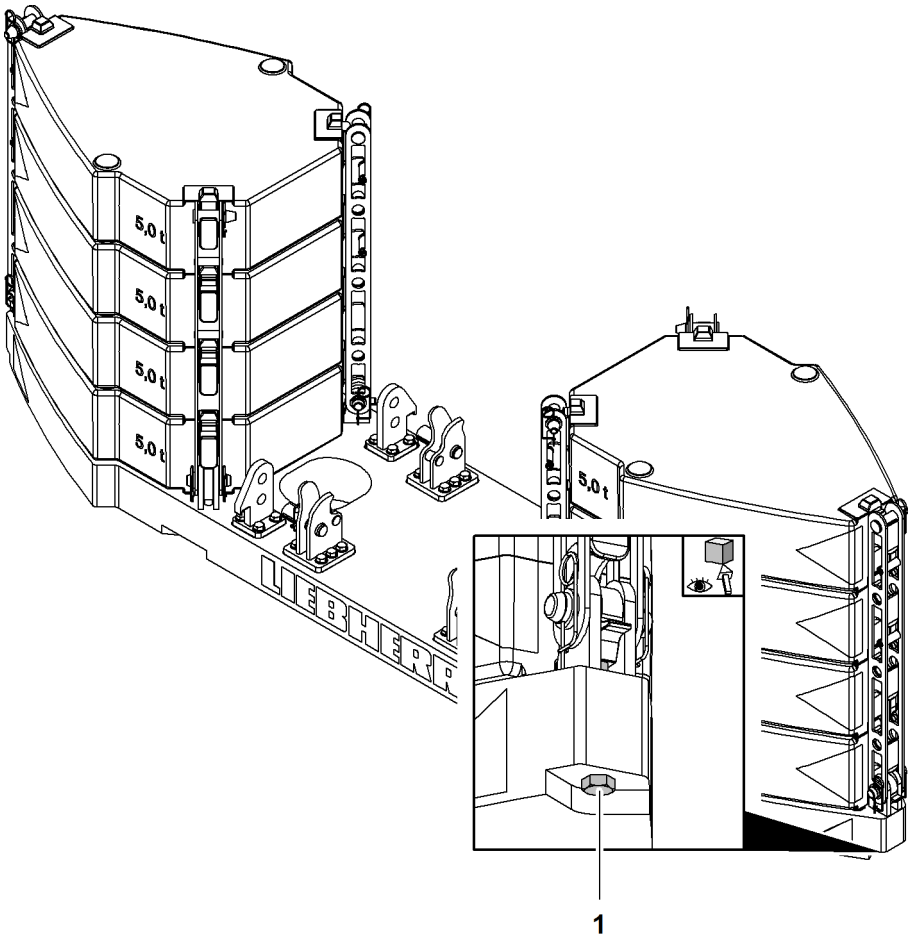

Fig. 5794: Checking the screws of the rear counterweight tie-down for tight fit (illustration of principle)

1 Screw (6x)

The screws **1** of the rear counterweight tie-down must be tightened finger-tight with a wrench.

▶ Check the screws **1** of the rear counterweight tie-down for tight fit.

If the screws **1** of the rear counterweight tie-down are loose:
▶ Tighten screws **1** hand-tight with a wrench.

9.40.2 Checking the rear counterweight, fixing lugs and round steel chains for damage, wear and secure fit

▶ Check rear counterweight, fixing lugs and round steel chains for damage, wear and secure fit.

LWN/LR.x/V03.01//Auslieferung/2015-06-03/en

copyright by LIEBHERR

If the rear counterweight, fixing lugs and round steel chains are not in perfect condition:
▶ Contact Liebherr customer service.

If the rear counterweight, fixing lugs and round steel chains are loose:
▶ Attach rear counterweight, fixing lugs and round steel chains.

9.40.3 Checking locking elements for availability, damage, wear and tight fit

▶ Check locking elements (washer, nut, spring) for damage and wear (cracks, notches, corrosion, deformation, etc.).

If locking elements (washer, nut, spring) show damage or wear:
▶ Replace locking elements.

▶ Contact Liebherr customer service.

9.40.4 Checking counterweight supports (pins, shackles) for damage and wear

▶ Check counterweight supports (pins, shackles) for damage and wear (cracks, notches, corrosion, deformation, etc.).

If counterweight supports (pins, shackles) show damage or wear:
▶ replace counterweight supports (pins, shackles).

▶ Contact Liebherr customer service.

LWN/LR.x/V03.01//Auslieferung/2015-06-03/en

copyright by
LIEBHERR

9.41 Lubrication system

9.41.1 Checking the function of the central lubrication system

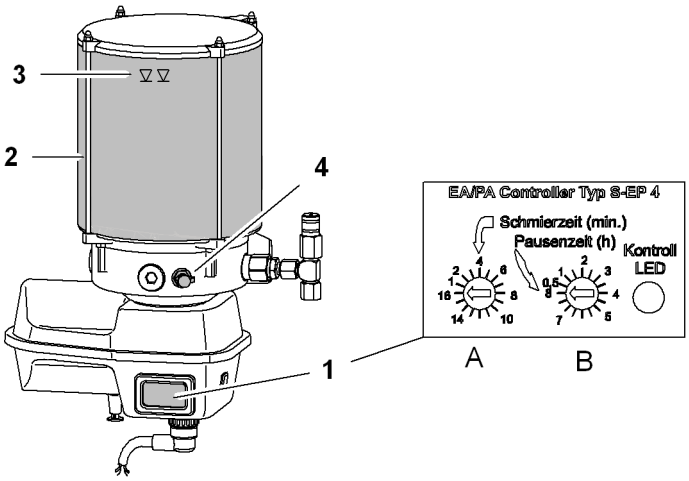

Fig. 5795: Checking the function of the central lubrication system

1	Control unit	**4**	Filling nipple
2	Supply container	**A**	*Set lubrication time* rotary control knob
3	“Maximum fill level” marker	**B**	*Set pause time* rotary control knob

The central lubrication system's lubricating pump is located in the uppercarriage.

Ensure that the following conditions are fulfilled:

- ❑ Safety lever is lowered.
- ❑ Free swing is switched on.

After the diesel engine is switched on, the yellow indicator light lights up for 1.5 seconds, indicating readiness for operation.

An interim lubrication at the programmed lubrication time must take place after the *Interim lubrication* button is pressed on the lubrication pump. After this lubrication time has expired, the lubrication process is switched off and the programmed pause time commences. All further lubrication processes are automatically initiated with the preset times.

▶ To check the operation of the central lubrication: Press the *Interim lubrication* button.

If no interim lubrication takes place after pressing the *Interim lubrication* button:
▶ Contact Liebherr after sales service.

9.41.2 Check fill level of the lubrication pump

Ensure that the following conditions are fulfilled:
- ❑ The grease gun from the Liebherr tool kit is present and filled with grease (For more information see: 9.2.3 Lubrication chart, page 1802) .
- ❑ The machine is switched off.
- ❑ The machine is secured to prevent unauthorised operation.

LWN/LR.x/V03.01//Auslieferung/2015-06-03/en

copyright by LIEBHERR

NOTICE
Incorrect or impure grease!
Damage to machine.

▶ To prevent impurities: only fill the supply container with grease via the grease nipple.

▶ Ensure the purity of the grease.

▶ Top up using only the appropriate grease according to the lubrication chart (For more information see: 9.2.3 Lubrication chart, page 1802) .

NOTICE
Empty grease supply container!
The swing ring and tooth flanks will be insufficiently lubricated and damaged.
Extensive cleaning work and venting work on central lubrication pumps.

▶ Ensure that supply containers are permanently topped up.

▶ Check fill level of the lubrication pump.

If the fill level lies well below the “Maximum fill level” marker:
▶ Top up with grease until the “Maximum fill level” marker is reached.

9.41.3 Checking the time intervals of the lubrication pump

Ensure that the following conditions are fulfilled:
❑ The machine is switched off.
❑ The machine is secured to prevent unauthorised operation.

Do not adjust the following factory-set time intervals to ensure optimum lubrication:
– Lubrication time: 2 minutes
– Break time: 1 hour

▶ Check time intervals of lubrication pump.

If the lubrication pump settings do not match the specifications:
▶ Correct the settings to match the appropriate specifications.

9.41.4 Checking the lubrication points

Ensure that the following conditions are fulfilled:
❑ The machine is switched off.
❑ The machine is secured to prevent unauthorised operation.

▶ Check the lubrication points for sufficient lubrication.

If no grease collars can be seen at the lubrication points:
▶ Check the settings of the lubrication pump.

▶ Check the lines for damage.

▶ Contact Liebherr after sales service.

LWN/LR.x/V03.01//Auslieferung/2015-06-03/en

copyright by
LIEBHERR

9.42 Derrick equipment*

9.42.1 Check derrick boom base section, derrick boom head and derrick boom sections for damage and wear (cracks, notches, corrosion, plastic deformation, wear)

DANGER
Machine operation with damaged derrick boom is prohibited!
Structural failure.

▶ Operate machine exclusively with derrick boom in perfect condition.

The steel structure of the derrick boom must undergo a thorough visual inspection according to the maintenance plan or as laid down in national regulations.

If the machine was subject to excess strain as the result of a severe impact or a large number of load cycles, the structural components must be examined immediately and the inspection intervals reduced.

Any cracks in the steel structure must be examined by qualified service personnel. This can be done using the following testing procedures:

– Magnetic particle inspection
– Dye penetrant inspection

The derrick boom base section, derrick boom head and the derrick boom sections must be checked for bent or damaged boom pipes of the welded structure.

▶ Check derrick boom base section, derrick boom head and derrick boom sections for damage and wear (cracks, notches, corrosion, plastic deformation, wear).

If the derrick boom base section, the derrick boom head or the derrick boom sections are not in perfect condition:
▶ Observe instructions for repairs on steel structure (For more information see: 9.32.2 Repairs on the steel structure, page 1886) .

9.42.2 Greasing the bearing of the derrick boom base section

Ensure that the following conditions are fulfilled:
❑ The grease gun from the Liebherr tool kit is present and filled with grease (For more information see: 9.2.3 Lubrication chart, page 1802) .
❑ The machine is level.
❑ The machine is secured to prevent unauthorised operation.

LWN/LR.x/V03.01//Auslieferung/2015-06-03/en

copyright by
LIEBHERR

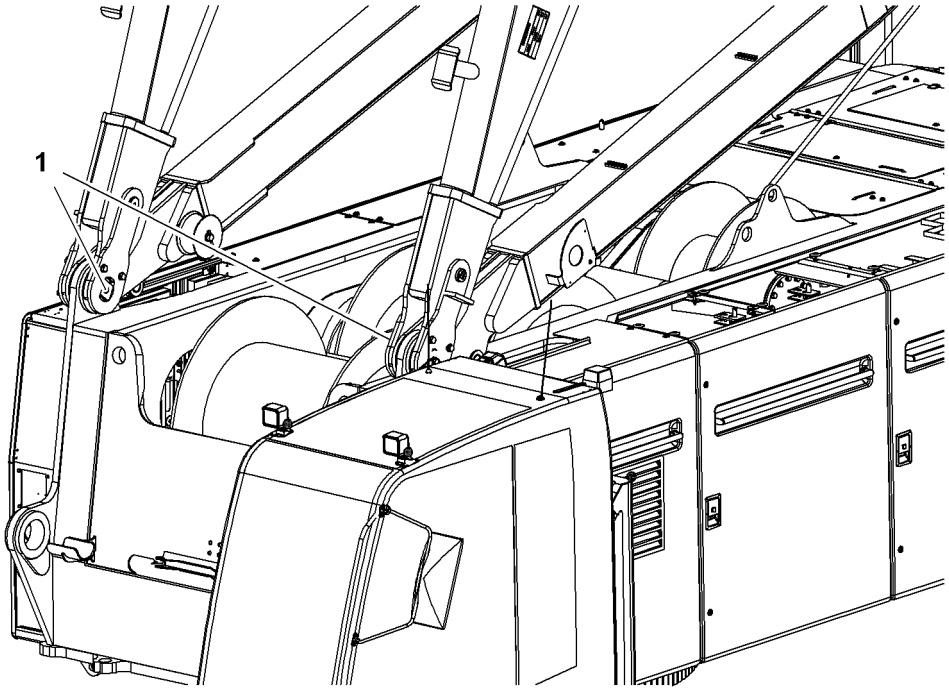

Fig. 5796: Lubricating the bearings

1 Grease nipple

▶ Using the grease gun, press 10 g (0.02 lb) of grease onto the grease nipple **1**.

9.42.3 Greasing the extension device of the counterweight carriage (strut, uppercarriage pin connection)

Ensure that the following conditions are fulfilled:
- ❑ The grease gun from the Liebherr tool kit is present and filled with grease (For more information see: 9.2.3 Lubrication chart, page 1802) .
- ❑ The machine is level.
- ❑ The machine is secured to prevent unauthorised operation.

▶ Grease strut of extension cylinder.

▶ Using the grease gun, press in 10 g (0.02 lb) of grease via grease nipples (2 to 4).

9.42.4 Checking the air pressure of the counterweight carriage

Make sure the following prerequisites are met:
- ❑ Machine is level.
- ❑ Machine is secured against unauthorized start-up.

LWN/LR.x/V03.01//Auslieferung/2015-06-03/en

copyright by LIEBHERR

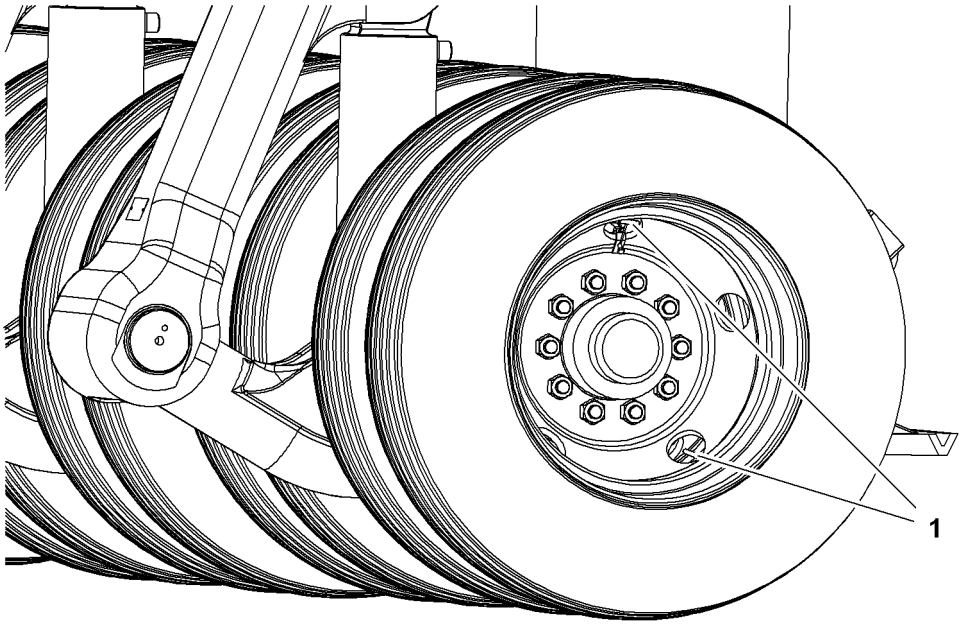

Fig. 5797: Checking the air pressure of the counterweight carriage

1 Valves

The tire pressure must be 10 bar (145.04 psi). The tire pressure stated on the tires can be ignored.

▶ Check air pressure with suitable compressor on the valves **1**.

If the air pressure in the tires is too high:
▶ Reduce tire pressure.

If the air pressure in the tires is too low:
▶ Increase tire pressure.

9.42.5 Checking the tires of the counterweight carriage for damage

Make sure the following prerequisites are met:
❑ Machine is level.
❑ Machine is secured against unauthorized start-up.

▶ Check tires for tears in the side wall.

▶ Check running surface for penetrated foreign objects.

If the tires are not in perfect condition:
▶ Contact Liebherr customer service.

9.42.6 Lubricating the axes and swing arms of the counter-weight carriage's wheel sets

Make sure the following prerequisites are met:
❑ Grease gun from Liebherr tool kit is available and filled with correct grease (For more information see: 9.2.3 Lubrication chart, page 1802) .
❑ Machine is level.
❑ Machine is secured against unauthorized start-up.

LWN/LR.x/V03.01//Auslieferung/2015-06-03/en

copyright by
LIEBHERR

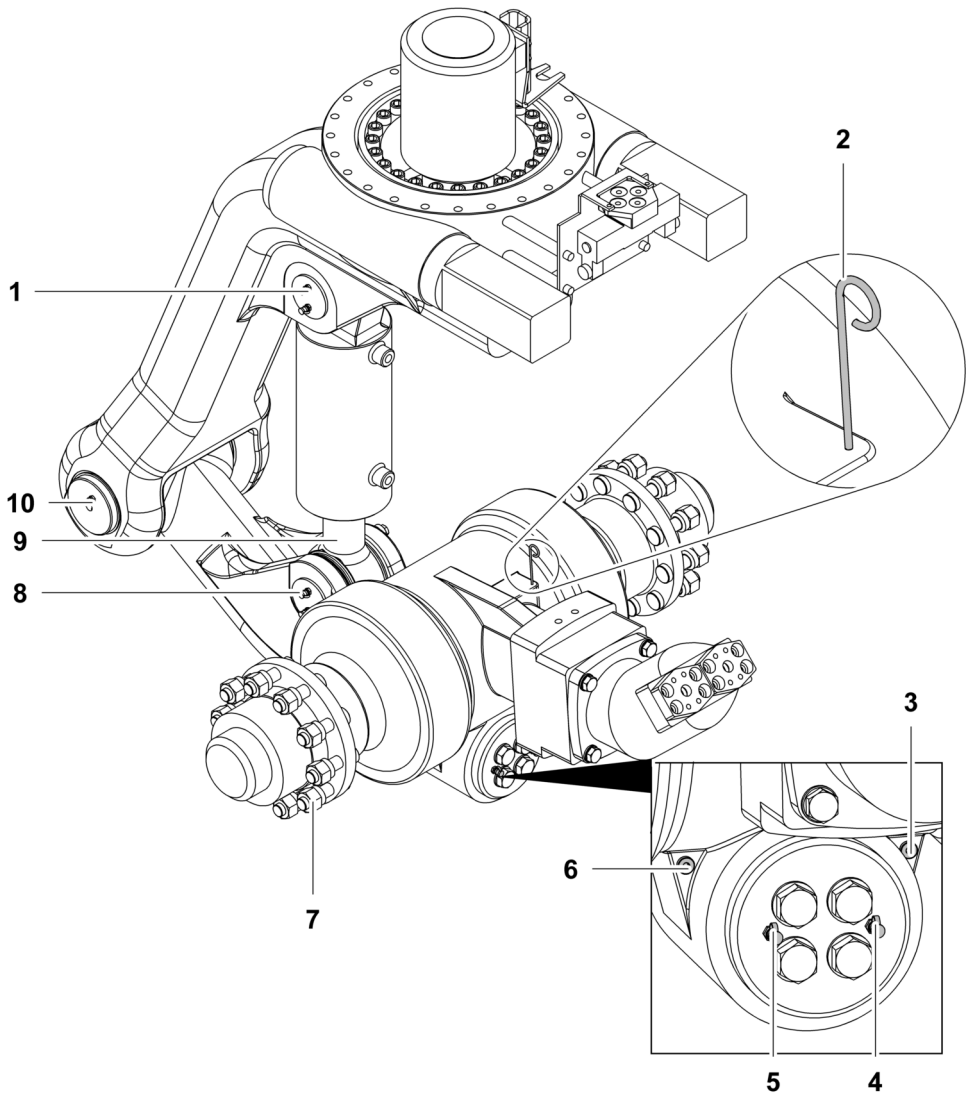

Fig. 5798: Lubricating the axes and swing arms of the counterweight carriage's wheel sets

1	Grease nipple (2x)	**6**	Drain screw
2	Oil dipstick	**7**	Wheel nut (20x)
3	Drain screw	**8**	Grease nipple (2x)
4	Grease nipple	**9**	Hydraulic cylinder
5	Grease nipple	**10**	Grease nipple (2x)

▶ Using the grease gun, press in 10 g (0.02 lb) of grease via grease nipples **1 + 4 + 5 + 8 + 10**.

9.42.7 Lubricating the drive units of the counterweight carriage's wheel sets

Make sure the following prerequisites are met:

- ❑ Grease gun from Liebherr tool kit is available and filled with correct grease (For more information see: 9.2.3 Lubrication chart, page 1802) .
- ❑ Machine is level.
- ❑ Machine is secured against unauthorized start-up.

LWN/LR.x/V03.01//Auslieferung/2015-06-03/en

copyright by LIEBHERR

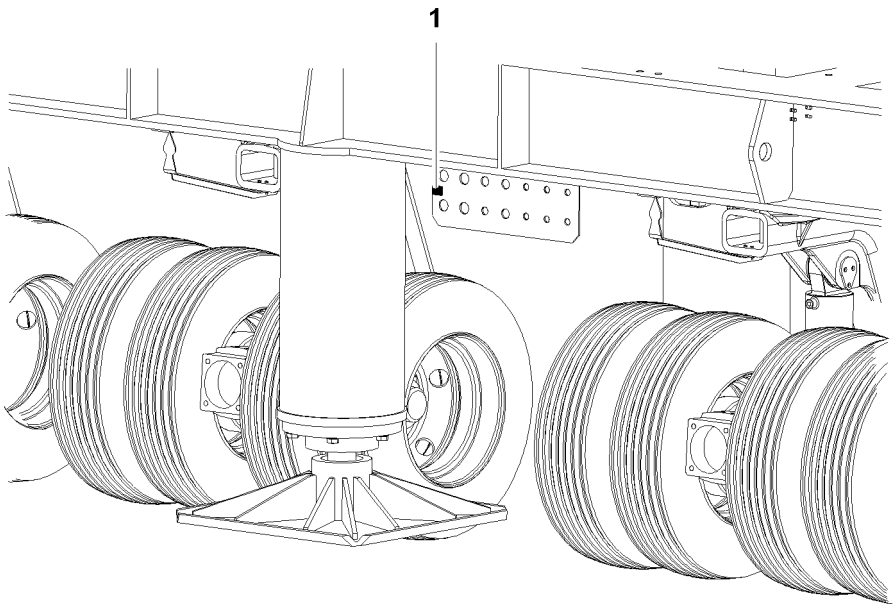

Fig. 5799: Lubricating the drive units of the counterweight carriage's wheel sets

1 Central lubrication point

▶ Using the grease gun, press in 10 g (0.02 lb) grease via central lubrication point **1**.

9.42.8 Checking the gearbox oil level in the counterweight carriage's axle gearbox

Make sure the following prerequisites are met:
❑ Machine is level.
❑ Machine is secured against unauthorized start-up.

LWN/LR.x/V03.01//Auslieferung/2015-06-03/en

copyright by
LIEBHERR

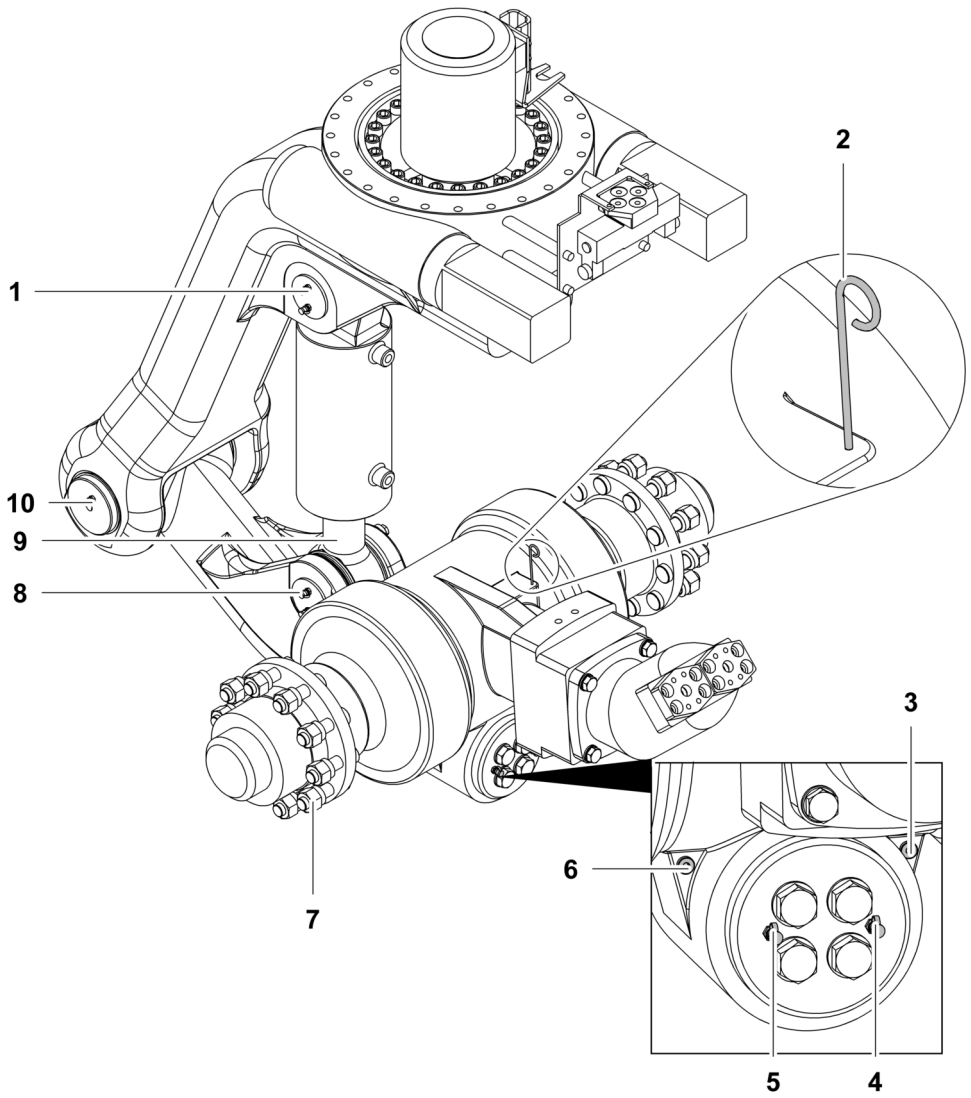

Fig. 5800: Checking the gearbox oil level in the counterweight carriage's axle gearbox

1	Grease nipple (2x)	**6**	Drain screw
2	Oil dipstick	**7**	Wheel nut (20x)
3	Drain screw	**8**	Grease nipple (2x)
4	Grease nipple	**9**	Hydraulic cylinder
5	Grease nipple	**10**	Grease nipple (2x)

▶ Pull out oil dipstick **2**, clean, reinsert all the way.

▶ Pull out oil dipstick **2** again and check gearbox oil level.

If gearbox oil level is below the MIN mark:

▶ Top up using appropriate gearbox oil in accordance with the lubrication chart (For more information see: 9.42.9 Filling in gearbox oil at the counterweight carriage's axle gearbox, page 1926) .

If gearbox oil level is above the MAX mark:

▶ Drain gearbox oil using drain screw **3 + 6**.

LWN/LR.x/V03.01//Auslieferung/2015-06-03/en

copyright by
LIEBHERR

9.42.9 Filling in gearbox oil at the counterweight carriage's axle gearbox

Make sure the following prerequisites are met:
- ❑ Diesel engine has been switched off for 5 minutes.
- ❑ Machine is level.
- ❑ Machine is secured against unauthorized start-up.

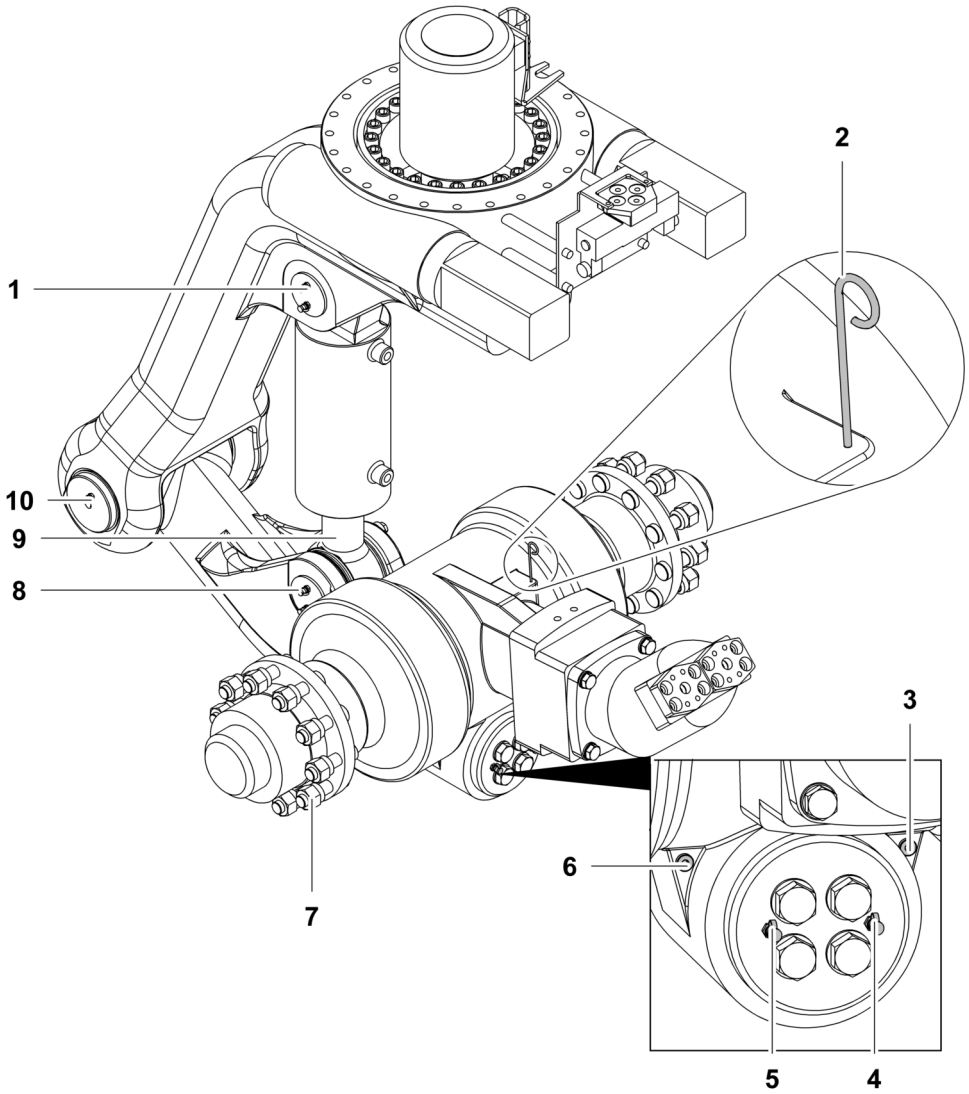

Fig. 5801: Filling in gearbox oil at the counterweight carriage's axle gearbox

1	Grease nipple (2x)	**6**	Drain screw
2	Oil dipstick	**7**	Wheel nut (20x)
3	Drain screw	**8**	Grease nipple (2x)
4	Grease nipple	**9**	Hydraulic cylinder
5	Grease nipple	**10**	Grease nipple (2x)

LWN/LR.x/V03.01//Auslieferung/2015-06-03/en

copyright by
LIEBHERR

CAUTION
Hot gearbox components and gearbox oil!
Burns.

- ▶ Maintenance work and inspection work on axle gearboxes may only be carried out when the machine is switched off and has cooled down.
- ▶ Wear protective equipment.

NOTICE
Dirt and foreign bodies in axle gearbox!
Damage to axle gearbox.

- ▶ Ensure that no dirt or foreign bodies enter the filler neck.

- ▶ Pull out oil dipstick **2**.
- ▶ Pull out oil dipstick **2** again and check gearbox oil level.

NOTICE
Inadmissible or contaminated gearbox oil!
Damage to axle gearbox.

- ▶ Top up using only appropriate gearbox oil according to lubrication chart (For more information see: 9.2.3 Lubrication chart, page 1802) .
- ▶ Check purity of gearbox oil.

- ▶ Top up gearbox oil up to MAX mark.
- ▶ Reinsert oil dipstick **2** all the way again.

9.42.10 Checking the hydraulic cylinders of the counterweight carriage's wheel sets for tightness

- ▶ Check hydraulic cylinders of the counterweight carriage's wheel sets for tightness.

If the hydraulic cylinders of the wheel sets are leaky:
- ▶ Do not operate counterweight carriage.
- ▶ Contact Liebherr customer service.

9.42.11 Checking the hydraulic connections on the counterweight carriage for tightness

- ▶ Check hydraulic connections on the counterweight carriage for tightness.

If the hydraulic connections on the counterweight carriage are not tight:
- ▶ Do not operate counterweight carriage.
- ▶ Contact Liebherr customer service.

LWN/LR.x/V03.01//Auslieferung/2015-06-03/en

copyright by
LIEBHERR

9.42.12 Checking the screws of the counterweight tie-down for tight fit

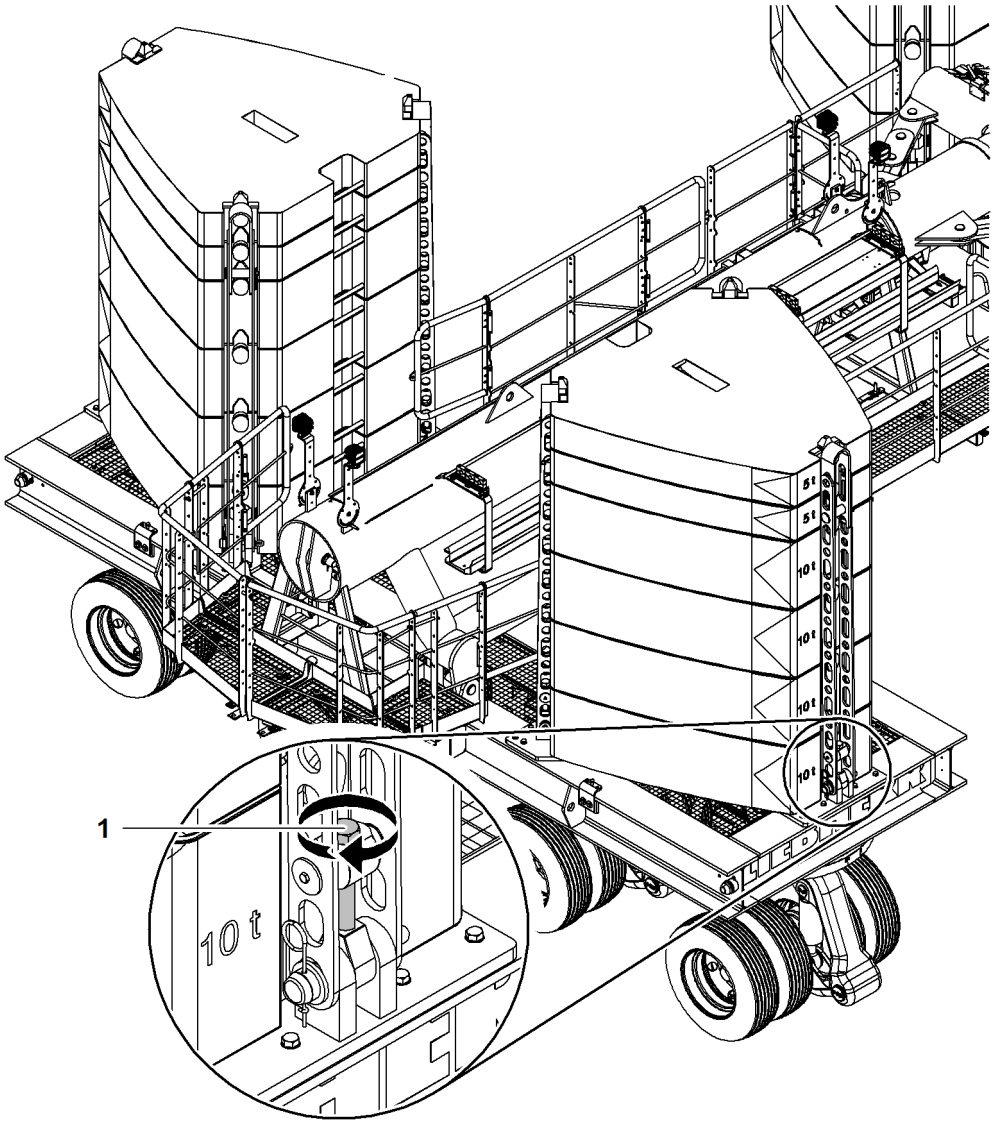

Fig. 5802: Checking the screws of the counterweight tie-down for tight fit

1 Screw (6x)

The screws **1** of the counterweight tie-down must be tightened hand-tight with a wrench.

▶ Check screws **1** of counterweight tie-down for tight fit.

If the screws **1** of the counterweight tie-down are loose:
▶ Tighten screws **1** hand-tight with a wrench.

LWN/LR.x/V03.01//Auslieferung/2015-06-03/en

copyright by
LIEBHERR

9.43 Ropes

Due to the limited service life of wire ropes, ropes must be checked at regular intervals by a qualified rope inspector during use to correctly identify when the rope has reached the end of its service life and to remove it from service before it fails completely.

The degrees of severity of the following lowering criteria must be added for correct evaluation of the rope status:
– Reduction of rope diameter
– External corrosion
– Wire breaks

In case of a degree of severity of 100 %, the rope must be laid down.

The following points are important when determining the inspection intervals and may shorten the intervals:
– National and local regulations that apply in the country of use.
– The environmental conditions to which the machine is exposed.
– The first few weeks after a rope has been put on.
– Results of previous inspections.
– The length of time the rope has already been in use

DANGER
Rope damage is not noticed!
Load breakaway.

Following prolonged shutdown of the machine or incidents that could have resulted in damage to the rope:
▶ Check rope and end attachments.

These rope changing criteria form part of ISO 4309. They describe the most commonly occurring types of rope wear.

DANGER
Incorrect maintenance of ropes!
Load breakaway.

▶ All the listed criteria must be checked at the prescribed maintenance intervals.

▶ Check the rope in particular around the end attachment as it is subject to increased mechanical stresses at this point.

If any doubts on the operational safety of a rope exist:
▶ Lay down the rope or have the rope inspected by a qualified engineer.

Ensure that the following conditions are fulfilled:
❑ The machine is switched off.
❑ The machine is secured to prevent unauthorised operation.

LWN/LR.x/V03.01//Auslieferung/2015-06-03/en

copyright by
LIEBHERR

9.43.1 Check ropes for wear, tight fit and lubrication

Checking ropes for lubrication

Regular rope maintenance ensures safe operation of the crane and increases the service life of the rope. Only lubricant equivalent to the original rope lubricant may be used. The rope must be regularly lubricated where it bends around the winch drums and the pulleys. Grease is applied using a brush. In exceptional cases, high-pressure lubrication units are used (if these are used, the manufacturer's instructions must be followed). An alternative is to use solvent-based lubricants that can be sprayed on the rope.

NOTICE
Operation with non-lubricated ropes!
Ropes may become damaged.

▶ Lubricate ropes.

▶ Lubricate ropes where they bend around the winch drums and the pulleys.

NOTICE
Wrong lubricant!
Risk of damage to the rope.

▶ Only use lubricant that fully matches the original rope lubricant.

The ropes must be lubricated.

▶ Check ropes for lubrication.

If the ropes are not lubricated:
▶ Lubricate ropes.

▶ Lubricate ropes where they bend around the winch drums and the pulleys.

Note

▶ Choose the lubrication intervals for the ropes based on the operating conditions.

Check the rope for diameter shrinkage

As a result of natural wear that occurs during use, ropes gradually become thinner and must eventually be withdrawn from service. If the rope diameter has reduced over long sections as a result of internal friction, corrosion, etc., the rope must be replaced regardless of whether or not wire breaks have occurred.

The following table describes the evaluation criteria for an even reduction of the rope diameter for sections of the rope that are wound in one layer on a drum and/or run in a steel pulley.

LWN/LR.x/V03.01//Auslieferung/2015-06-03/en

copyright by
LIEBHERR

Rope type	Even reduction of the rope diameter in % of the nominal rope diameter	Rating of the degree of severity	
		Description	%
Single-layer rope with fiber inlay	< 6	—	0
	6 to 7	Slight	20
	7 to 8	Medium	40
	8 to 9	High	60
	9 to 10	Very high	80
	> 10	Laying down	100
Single-layer rope with steel inlay or Parallellitzenseil	< 3.5	—	0
	3.5 to 4.5	Slight	20
	4.5 to 5.5	Medium	40
	5.5 to 6.5	High	60
	6.5 to 7.5	Very high	80
	> 7.5	Discarding	100
Non-rotating rope	< 1	—	0
	1 to 2	Slight	20
	2 to 3	Medium	40
	3 to 4	High	60
	4 to 5	Very high	80
	> 5	Discarding	100

Tab. 596: Evaluation criteria for an even reduction of the rope diameter indicating the necessity to lay down the rope

Ensure that the following conditions are satisfied:
- ❑ A caliper gauge with wide jaws is available.
- ❑ The machine is switched off.
- ❑ The machine is secured to prevent unauthorised operation.

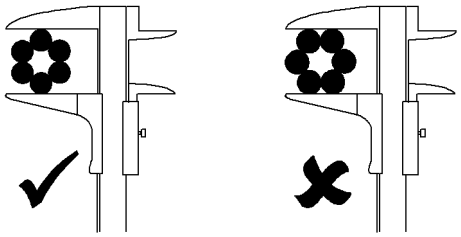

Fig. 5803: Correct (left) and incorrect measurement (right) of rope diameter

▶ Measure the rope diameter on two separate points at least 1 m (3‘ 3“ ft-in) distant from each other.

▶ Always measure the rope diameter twice at the same point.

The average corresponds to the rope diameter.

▶ Calculate the average of the four measurements.

LWN/LR.x/V03.01//Auslieferung/2015-06-03/en

copyright by
LIEBHERR

If the reduction of the rope diameter has reached the degree of severity “discard”:
▶ Remove the rope.

Note

If new ropes are to be attached:
▶ Check the rope drive.

Checking the ropes for deformations

Check for:	Photographs of damage:
Pockets: These can occur when the outer layer of wires loosens or the outer wire strands are longer than the inner ones. Movement of the outer wires or strands in relation to the inner ones causes movement of the excess length at a particular location.	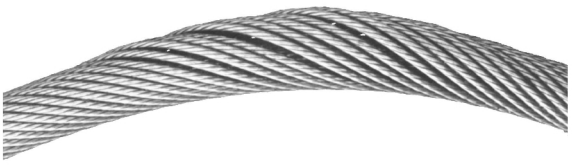
Loop formation: Single wires or groups of wires emerge from the rope structure. The loops usually lie in a series of strands.	
Necking: is reductions in the diameter of the wire rope over short lengths. Rope sections immediately before the end attachment must be checked for necking with particular care. Necking is often difficult to recognise at these points.	

LWN/LR.x/V03.01//Auslieferung/2015-06-03/en

copyright by
LIEBHERR

Check for:	Photographs of damage:
Knots: are deformations of the wire rope. They are formed when a eyelet-shaped rope loop is pulled straight without the wire rope being able to compensate by turning on its axis.	
Corkscrews: With this type of deformation, the axis of the unloaded wire rope becomes helical. This does not weaken the wire rope initially, though it might prevent the rope drive from running smoothly. The resultant damage can include increased abrasion and more wire breaks. The rope must be withdrawn from service if the area of greatest deformation exceeds 1/3 of the nominal rope diameter.	

Tab. 597: Checking the ropes for deformations

▶ Check the ropes for deformations.

If the rope meets one of the criteria above or exhibits specific damage:

▶ Switch off the machine and, if possible, determine the cause of the damage.

▶ Remove the rope and/or rope pair.

Check ropes for corrosion

The following table describes the discard criteria and states transition values of the corrosion severity.

Corrosion type	Status	Rating of the degree of severity
External corrosion	Signs of surface oxidation that can however be removed	On the surface = 0 %
	Wire surface feels rough	High = 60% [A)]
	Wire surface with a lot of corrosion spots and loose wires [B)]	Discard = 100 %
Internal corrosion	Apparent signs of internal corrosion, meaning corrosion residues that emerge in the grooves between the outer strands [C)]	Discard = 100 % or, if deemed to be realizable by a qualified person, internal inspection in line with the method described in Appendix C

LWN/LR.x/V03.01//Auslieferung/2015-06-03/en

copyright by LIEBHERR

Corrosion type	Status	Rating of the degree of severity
Abrasion	The abrasion process includes the detachment of small steel particles as a result of constant friction between dry wires and strands and subsequent oxidation. This leads to the deposit of internal corrosion residues manifesting as a dry powder similar to a polishing agent.	Signs of such manifestations must be further investigated and the rope discarded if there is even the slightest doubt concerning the severity of the damage (100 %)
PLEASE NOTE: An increase of the diameter may be due to internal corrosion or abrasion.		

Tab. 598: Discarding criteria and transition values regarding the severity of corrosion

A) Oxidizing of galvanized wires may lead to a rough surface of the wire, but the general state should not be as severe as with non-galvanized wires. In such cases, the inspector may consider applying a lower contribution towards the combined effect to that given in this table.
B) For all other intermediate states, the degree of severity must be evaluated (e.g. contribution to combined effect).
C) The evaluation of the internal corrosion is subjective. However, in case of the slightest doubt about the degree of the internal corrosion, the rope must be discarded.

Check for:	Photographs of damage:
Corrosion: occurs mostly in corrosive and salt water atmospheres (e.g. prolonged storage of ropes in the open air, salt water atmosphere, etc.). Two types of corrosion occur: atmospheric corrosion (causes "even" rust) and localized corrosion, such as pitting (forms deep holes in places where the protective sheath is missing or damaged). The photographs both show atmospheric corrosion.	
The diameter of the rope has reduced as a result of corrosion. If the rope diameter has reduced by 10% or more relative to the nominal dimension, the rope must be changed regardless of whether or not wire breaks have occurred.	

Tab. 599: Check ropes for corrosion

▶ Check ropes for corrosion.

LWN/LR.x/V03.01//Auslieferung/2015-06-03/en

copyright by LIEBHERR

If the rope meets one of the criteria above or exhibits specific damage:

▶ Switch off the machine and, if possible, determine the cause of the damage.

▶ Remove the rope and/or rope pair.

Check ropes for abrasion

Check for:	Photographs of damage:
Abrasion: reduces both the static breaking force of the rope due to reduction of the metallic cross-section and its fatigue limit due to wear grooves. If the rope diameter has reduced by 10% or more relative to the nominal dimension, the rope must be changed regardless of whether or not wire breaks have occurred.	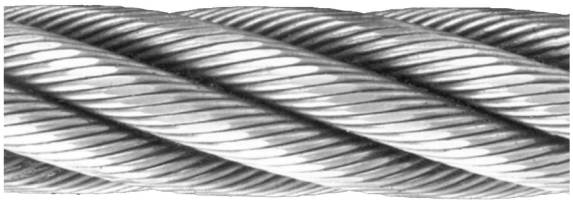

Tab. 600: Check ropes for abrasion

▶ Check ropes for abrasion.

If the rope meets one of the criteria above or exhibits specific damage:

▶ Switch off the machine and, if possible, determine the cause of the damage.

▶ Remove the rope and/or rope pair.

Check ropes for the effects of heat

Check for:	Photographs of damage:
Heat damage: If the temperature rises above300 °C (572 °F) the tensile fibre structure of the wire rope caused by cold deformation recrystallises and the wire loses around 2/3 of its original strength.	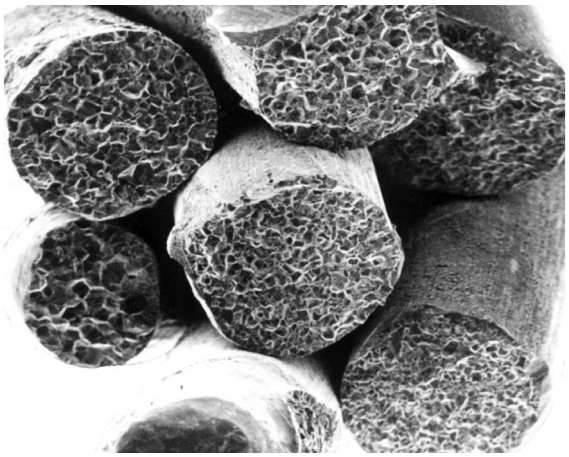

LWN/LR.x/V03.01//Auslieferung/2015-06-03/en

copyright by
LIEBHERR

Check for:	Photographs of damage:
An extreme form of heat damage is caused by lightning strike. The rope may heat up at the point of the strike to such an extent that the steel starts to melt. In all cases of exposure to high temperatures, the rope must be changed regardless of whether or not wire breaks have occurred.	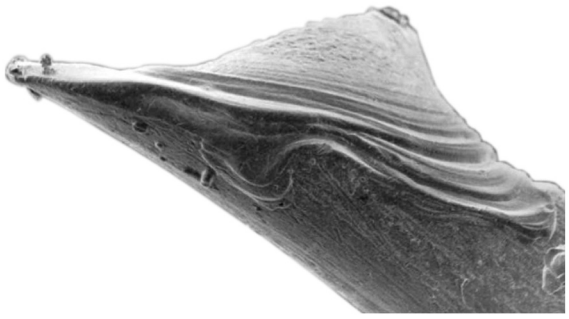

Tab. 601: Check ropes for the effects of heat

Note

▶ For permitted operating temperatures for ropes and end attachments, refer to EN 12385-3.

▶ Check ropes for significant heat damage.

If a rope displays signs of external heat damage, such as recrystallisation, melting. etc.:

▶ Switch off the machine and, if possible, determine the cause of the damage.

▶ Remove the rope and/or rope pair.

Check the rope for number of permitted wire breaks

The table below shows the permitted number of wire breaks relative to a defined control section of the rope.

Single-layer and Parallellitzenseile

Rope category (RCN)	Number of bearing wires in the outer strands of the wire rope [A)]	Number of visible wire breaks in outer wires [B)]					
		Rope section that runs over steel pulleys and/or is located as a single layer on the winch				Rope section located on the winch in several layers [C)]	
		Class M1 to M4 or unknown class [D)]				All classes	
		Cross lay		Lang lay		Cross lay and lang lay	
	n	on a length of 6d [E)]	on a length of 30d [E)]	on a length of 6d [E)]	on a length of 30d [E)]	on a length of 6d [E)]	on a length of 30d [E)]
01	n ≤ 50	2	4	1	2	4	8
02	51 ≤ 75	3	6	2	3	6	12
03	76 ≤ 100	4	8	2	4	8	16
04	101 ≤ 120	5	10	2	5	10	20
05	121 ≤ 140	6	11	3	6	12	22

LWN/LR.x/V03.01/Auslieferung/2015-06-03/en

copyright by LIEBHERR

Rope category (RCN)	Number of bearing wires in the outer strands of the wire rope [A]	Number of visible wire breaks in outer wires [B]					
		Rope section that runs over steel pulleys and/or is located as a single layer on the winch				Rope section located on the winch in several layers [C]	
		Class M1 to M4 or unknown class [D]				All classes	
		Cross lay		Lang lay		Cross lay and lang lay	
	n	on a length of 6d [E]	on a length of 30d [E]	on a length of 6d [E]	on a length of 30d [E]	on a length of 6d [E]	on a length of 30d [E]
06	141 ≤ 160	6	13	3	6	12	26
07	161 ≤ 180	7	14	4	7	14	28
08	181 ≤ 200	8	16	4	8	16	32
09	201 ≤ 220	9	18	4	9	18	36
10	221 ≤ 240	10	19	5	10	20	38
11	241 ≤ 260	10	21	5	10	20	42
12	261 ≤ 280	11	22	6	11	22	44
13	281 ≤ 300	12	24	6	12	24	48
	n > 300	0.04 × n	0.08 × n	0.02 × n	0.04 × n	0.08 × n	0.16 × n
PLEASE NOTE: Ropes with outer strands (Seale structure) in which the number of wires in each strand is 19 or less (e.g. 6 □× 19 Seale) are placed two rows above the row in this table in which the structure would normally be listed due to the number of bearing wires in the outer layer of the strand.							

Tab. 602: Reached or exceeded number of visible wire breaks that occur in single-layer or parallel strand ropes and indicate the necessity to discard the rope

A) For reasons of this international standard, filler wires are not regarded as bearing wires and not included in the value n.
B) A broken wire has two ends (counted as one wire).
C) Values apply for damages occurring in crossing sections and disruptions in the winding layers that can be attributed to deviations (not for those rope sections that only run in pulleys and are not wound on drums).
D) Twice the number of the stated wire breaks can be applied to ropes in mechanisms with a known classification as M5 to M8.
E) d = □Nominal rope diameter.

Non-rotating ropes

Rope category (RCN)	Number of outer strands and total number of bearing wires in the outer layer of the rope strands [A]	Number of visible breaks in outer wires [B]			
		Rope sections that run in pulleys and/or are wound in one layer on a drum (wire breaks are randomly scattered)		Rope sections wound in several layers on a drum [C]	
	n	on a length of 6d [D]	on a length of 30d [D]	on a length of 6d [D]	on a length of 30d [D]
21	4 strands n ≤ 100	2	4	2	4

LWN/LR.x/V03.01//Auslieferung/2015-06-03/en

copyright by LIEBHERR

Rope category (RCN)	Number of outer strands and total number of bearing wires in the outer layer of the rope strands [A] n	Number of visible breaks in outer wires [B]			
		Rope sections that run in pulleys and/or are wound in one layer on a drum (wire breaks are randomly scattered)		Rope sections wound in several layers on a drum [C]	
		on a length of 6d [D]	on a length of 30d [D]	on a length of 6d [D]	on a length of 30d [D]
22	3 or 4 strands n ≥ 100	2	4	4	8
	At least 11 outer strands				
23–1	71 ≤ n ≤ 100	2	4	4	8
23-2	101 ≤ n ≤ 120	3	5	5	10
23-3	121 ≤ n ≤ 140	3	5	6	11
24	141 ≤ n ≤ 160	3	6	6	13
25	161 ≤ n ≤ 180	4	7	7	14
26	181 ≤ n ≤ 200	4	8	8	16
27	201 ≤ n ≤ 220	4	9	9	18
28	221 ≤ n ≤ 240	5	10	10	19
29	241 ≤ n ≤ 260	5	10	10	21
30	261 ≤ n ≤ 280	6	11	11	22
31	281 ≤ n ≤ 300	6	12	12	24
	n > 300	6	12	12	24
PLEASE NOTE: Ropes with outer strands as Seale structure in which the number of wires in each strand is 19 or less (e.g. 18 □× 19 Seale - WSC) are placed two rows above the row in this table in which the structure would normally be listed due to the number of bearing wires in the outer layer of the strand.					

Tab. 603: Reached or exceeded number of visible wire breaks that occur in non-rotating ropes and indicate the necessity to discard the rope

A) For reasons of this international standard, filler wires are not regarded as bearing wires and not included in the value n.
B) A broken wire has two ends.
C) Values apply for damages occurring in crossing sections and disruptions in the winding layers that can be attributed to deviations (not for those rope sections that only run in pulleys and are not wound on the drum).
D) d = □Nominal rope diameter.

DANGER
Unsuitable rope is used!
Load breakaway.

If a new rope is to be attached:
- ▶ Choose a rope where the rope diameter, the breaking load and the number of bearing wires in the outer strands matches those of of the original rope.
- ▶ Choose a rope that meets the applicable national and international regulations.

LWN/LR.x/V03.01//Auslieferung/2015-06-03/en

copyright by LIEBHERR

▶ Check the number of wire breaks with the values in the table.

If the number of wire breaks exceeds the number of permitted wire breaks:
▶ Switch off the machine and, if possible, determine the cause of the damage.

▶ Remove the rope and/or rope pair.

9.43.2 Selecting a rope

DANGER
Impermissible use of ropes that do not conform to the manufacturer's specifications!
Load breakaway.

▶ Use exclusively ropes approved by Liebherr Werk Nenzing.

DANGER
Incorrectly fit swivels!
Load breakaway.

▶ The fitting of swivels for any of the machine ropes is forbidden.

▶ For information about any exceptions: Contact Liebherr after sales service.

Rope lay direction

The correct choice of lay direction for the wire rope is critical to the correct operation of the rope drive. Under stress any wire rope will tend to untwist. For this reason the rope lay direction must be chosen so that this untwisting torque is not encouraged by the drum or the reeving, but is compensated for by them instead. For example, a rope with left-hand lay direction can be wound around a left-hand drum, a right-hand drum, however, would counteract the rope's untwisting torque.

Rope lay direction in the case of multi-strand reeving

In the case of a multi-reeved rope drive, the influence of the deflection angle between the pulleys is greater than the influence of the drum itself. In such situations, the rope lay direction should be adapted to match the reeving. In addition, the lay direction of the reeving must always correspond to the lay direction of the drum.

Right-hand lay direction reeving:
– Rope with left-hand lay direction

Left-hand lay direction reeving:
– Rope with right-hand lay direction

Determining the lay direction of the drum or reeving:

▶ At the anchoring point of the rope on the drum, follow, with your finger, the winding of the rope from the anchoring point to the running strand.
  ▷ If you are moving your finger clockwise: the drum (the reeving) has a right-hand lay direction. A rope with left-hand lay direction is needed.

LWN/LR.x/V03.01//Auslieferung/2015-06-03/en

copyright by LIEBHERR

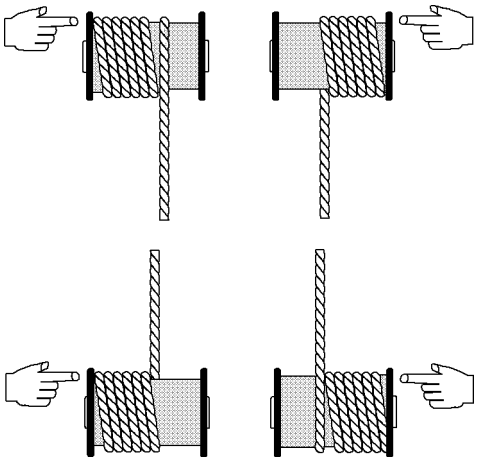

Fig. 5814: Drum with right-hand lay direction with rope with left-hand lay direction

▷ If you are moving your finger anti-clockwise: the drum (the reeving) has a left-hand lay direction. A rope with right-hand lay direction is needed.

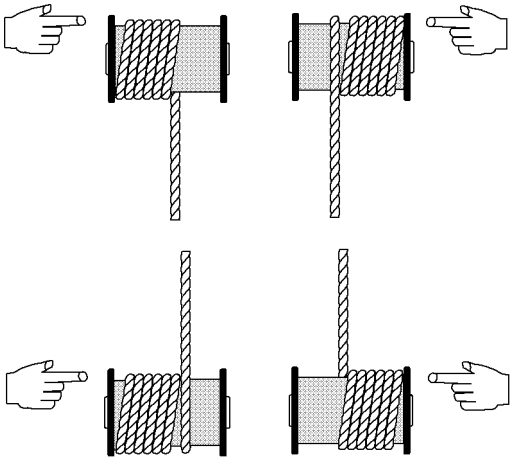

Fig. 5815: Drum with left-hand lay direction with rope with right-hand lay direction

Rope lay direction on a single layer drum

In the case of a single layer drum the choice of lay direction must be the opposite to the lay direction of the drum.

Right-hand lay direction drum:
– Rope with left-hand lay direction

Left-hand lay direction drum:
– Rope with right-hand lay direction

Rope lay direction on a multi-layer drum

In the case of multi-layer spooling, where the lay direction of the drum changes from layer to layer, the rope lay direction must match the layer that carries out the most rope work.

Right-hand lay direction:
– Rope with left-hand lay direction

LWN/LR.x/V03.01//Auslieferung/2015-06-03/en

copyright by
LIEBHERR

Left-hand lay direction:
– Rope with right-hand lay direction

Rotation resistant (wire) ropes

Ropes described as “rotation resistant” vary considerably with regard to the turning moment or twist when under stress.

There are two types of rotation resistant (wire) ropes:

Rotation resistant (wire) ropes

Rotation resistant (wire) ropes include ropes with two layers of strands, twisted around an inner core. The rope lay direction of the outer strands is opposite to that of the layer underneath.

WARNING
Unauthorised use of swivels!
Life-threatening situation and damage to the machine.

▶ Swivels must not be used with rotation resistant (wire) ropes.

High performance rotation resistant ropes

The high performance rotation resistant ropes have a separate twisted steel core that is twisted in the opposite direction to the outer layer, which nowadays consists of 15 and more outer strands. Under stress, the steel core twists in one direction, while at the same time the outer strand layer twists in the opposite direction. This largely compensates for the torque that occurs in the rope when it is under stress.

Due to these special rope properties, only high performance rotation resistant ropes are used:
– for hoist winches with high lifting heights.
– when lifting unguided loads in one-fall operation.

Note

▶ Despite this, the use of swivels is not recommended by Liebherr. Ropes onto which rotating parts are attached, e.g. Kelly ropes on drilling rigs, are excepted from this.

Non-rotation resistant ropes

WARNING
Rope ends loaded without an anti-rotation device!
High turning moments.

▶ Fit anti-rotation devices.

Non-rotation resistant ropes may be used:
– for guided loads
– for paired use of similar right and left hand laid rope designs

Under these conditions non-rotation resistant ropes achieve a higher fatigue life compared with rotation resistant (wire) ropes.

LWN/LR.x/V03.01//Auslieferung/2015-06-03/en

copyright by
LIEBHERR

WARNING
Impermissible combination of non-rotation resistant ropes with different lay directions (e.g. with pendant straps)!

- ▶ Do not combine non-rotation resistant ropes with different lay directions.
- ▶ Never use these rope designs with a swivel or having one or both rope ends without an anti-rotation device.

Non-rotation resistant ropes for hoist winches

DANGER
Improper use of non-rotation resistant ropes for hoist winches!
Load breakaway.

- ▶ Guide load to keep it from rotating.
- ▶ Make sure that no whorls or rotating elements are installed.
- ▶ Make sure the rope does not become twisted.

In exceptional cases, non-rotation resistant ropes may be used for hoist winches in the following applications:
– Dragline bucket
– Slurry wall grab
– Handling two-rope grab (paired right and left hand laid ropes)

Distortion of max. 180° is desired with the slurry wall grab.

The pendant ropes are designed as non-rotation resistant ropes.

Decision table

In the following decision table, which uses an example of the choice of most suitable wire rope design for the hoisting gear of a crane, the ten questions should be answered as far as possible with yes or no.

If there is no simple answer to a question then answer Yes/No.

Decision		Yes	Yes/No	No
1	Do you require a rotation resistant (wire) rope?	Special rope, rotation resistant	Special rope, rotation resistant	6, 8 or 10-strand rope
2	Is a high breaking force required?	Special rope SES, poss. sealed	SES	-
3	Is a high number of bending cycles required?	Multi-stranded, thin outer wires	Multi-stranded, thin outer wires	-
4	Is a high degree of abrasion resistance required?	Thick outer wires	Thick outer wires	-
5	Does the rope operate with multi-layer spooling?	Lang lay, sealed	-	Cross lay
6	Are structural changes expected?	Plastic intermediate layer	Plastic intermediate layer	-

LWN/LR.x/V03.01//Auslieferung/2015-06-03/en

copyright by
LIEBHERR

Decision		Yes	Yes/No	No
7	Do large deflexion angles occur?	Plastic intermediate layer	Plastic intermediate layer	-
8	Does the drum have a left-hand lay direction?	Rope with right-hand lay direction	-	Rope with left-hand lay direction
9	Does the reeving have a left-hand lay direction?	Rope with right-hand lay direction	-	Rope with left-hand lay direction
10	Will it be used in a corrosive environment?	Galvanized version	Galvanized version	Exposed version

Tab. 604: Decision table

9.43.3 Storing ropes

NOTICE
Ropes are not labelled!
Ropes/rope winders could be mixed up.

If the label is missing or is no longer clearly legible,
▶ Rope winders according to the delivery documents.

▶ Check that the labeling of supplied ropes matches the material inspection documents and the order.

▶ Material inspection certificates should be carefully filed away.

NOTICE
Incorrect storage!
Ropes may become damaged.

▶ Ropes should be stored correctly.

▶ Store wire ropes in a dry, well-ventilated area.

▶ Protect rope and rope winder from the elements: Never store rope or rope winder directly on the ground.

▶ Avoid storing them outdoors for prolonged periods.

9.43.4 Transporting ropes

Ropes are very sensitive to external damage.

WARNING
Incorrect transport (loaded, unloaded)!
Ropes may become damaged.

▶ Ropes should be transported correctly.

LWN/LR.x/V03.01//Auslieferung/2015-06-03/en

copyright by
LIEBHERR

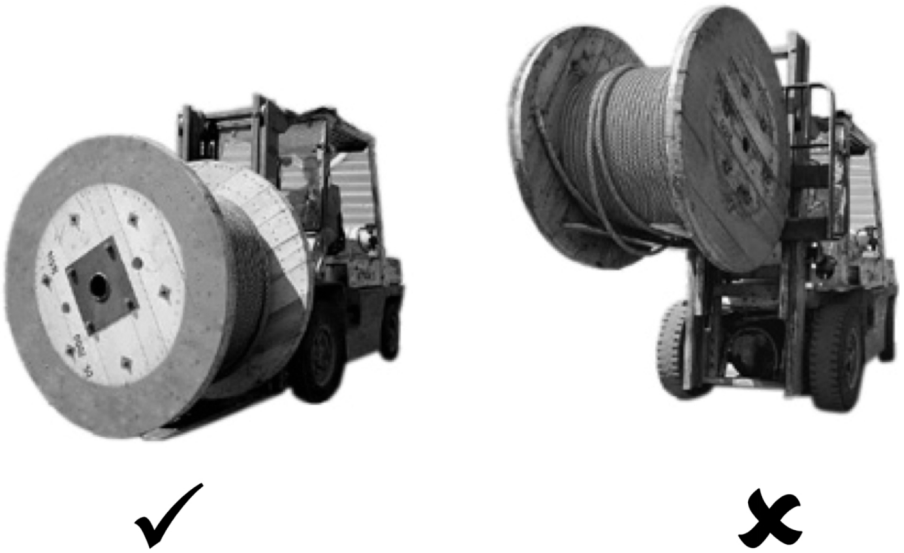

Fig. 5816: Lifting a rope winder correctly (left) and incorrectly (right) on a forklift truck

Correct procedures to avoid damage to ropes during transport:

- ▶ Lift rope winders using textile rigging (flat lifting slings or round slings).
- ▶ Ideally, rope winders should be lifted with a shaft pushed through their middle.
- ▶ Lift rope winders using forklift forks.

9.43.5 Winding ropes

Ropes will only function properly if they are undamaged and are laid without any distortion.

NOTICE
Ropes are not handled correctly!
Ropes may become damaged.

- ▶ Spool ropes exclusively as described below.

If the winding area of the rope is more in the upper rope layer when operating winches with multiple-layer spooling, the lower rope layer may become loose. This results in a slight ovalisation of the rope that changes the winding diameter across the width of the drum. This leads to gaps in the running rope layer, which impairs the spooling properties and increases rope wear.

NOTICE
Lower rope layer loosened!
Risk of damage to the rope.

- ▶ Improving the winding properties and reducing rope wear: Completely unwind rope at regular intervals and rewind with pretension (1% to 2% of the rope's minimum break force).

LWN/LR.x/V03.01//Auslieferung/2015-06-03/en

copyright by
LIEBHERR

A rope works most economically when its entire length is used. It is therefore recommended that an appropriate length of rope is used for lengthy operations.

Ensure that personal protective equipment is worn at all times.

NOTICE
Incorrect handling of the rope!
Risk of damage to the rope.

- ▶ Pull in rope with pretension when winding it onto the winch for the first time. The pretension force is reached by braking the rope reel and must be 1% to 2% of the rope's minimum break force.
- ▶ Do not brake the rope directly.
- ▶ Do not pull the rope along the ground.

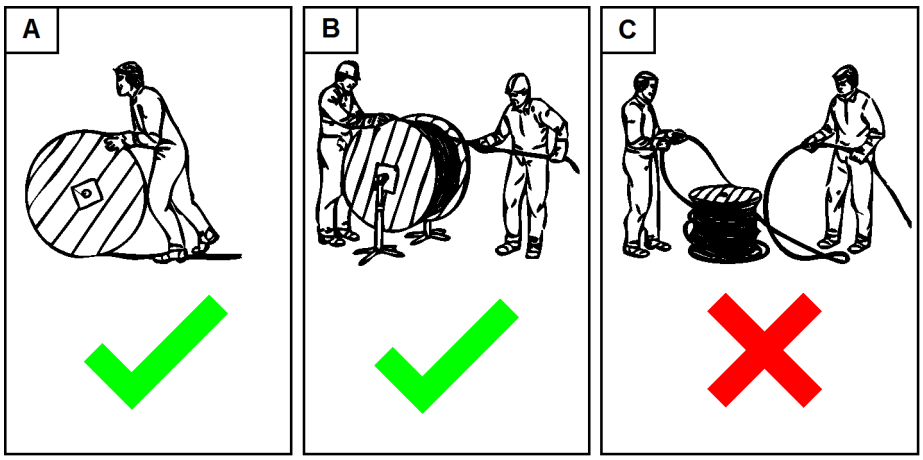

Fig. 5817: Winding ropes without brake

- ▶ Unwind ropes from the rope winder in the winding direction **A**.

Lateral unwinding causes the rope to twist until it is destroyed due to kinking.

- ▶ Unwind ropes from a jacked up rope winder **B**.

LWN/LR.x/V03.01//Auslieferung/2015-06-03/en

copyright by
LIEBHERR

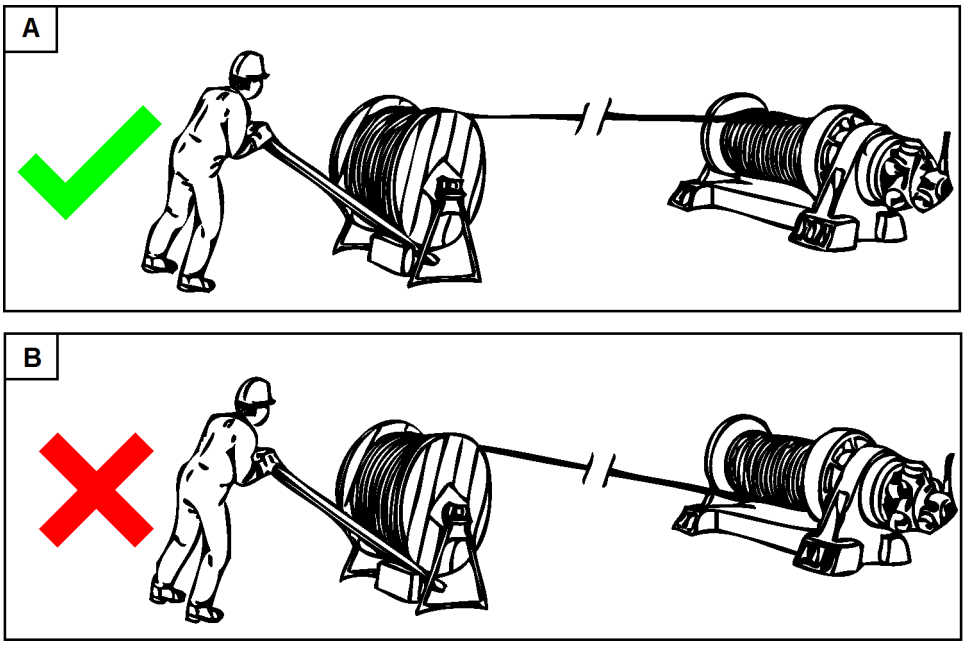

Fig. 5818: Winding ropes with brake

- ▶ Unwind ropes from a rope winder **A** that is braked.
- ▶ Check the ropes for damage, deformation, wear, etc. while it is unwound.

If the rope shows any signs of damage, deformation, wear, etc.:
- ▶ Remove the rope.

9.43.6 Luffing ropes

When luffing a new rope, ensure that the rope is not twisted or untwisted. The rope can be luffed using the old rope or ideally using an auxiliary rope. If an auxiliary rope is used, it must have sufficient permitted tensile force (at least the weight of the rope). If the old rope is used as the luffing rope, ensure that the new rope does not become twisted.

DANGER
Impermissible use of ropes that do not conform to the manufacturer's specifications!

- ▶ Use exclusively ropes approved by Liebherr Werk Nenzing GmbH.

DANGER
Inadmissible installation of swivels!
Load breakaway.

- ▶ Ensure that no swivels are installed on any of the ropes.
- ▶ For information about exceptions: Contact Liebherr customer service department.

LWN/LR.x/V03.01//Auslieferung/2015-06-03/en

copyright by
LIEBHERR

WARNING
Rotating winches, moving rope!
Risk of crushing of limbs, death.

- ▶ Turn off the diesel engine when working on winches.
- ▶ Ensure that there is nobody in the danger zone around the winches.
- ▶ Detach/fasten ropes exclusively from the uppercarriage.
- ▶ Ensure that the machine operator is in visual and voice contact with his assistant.

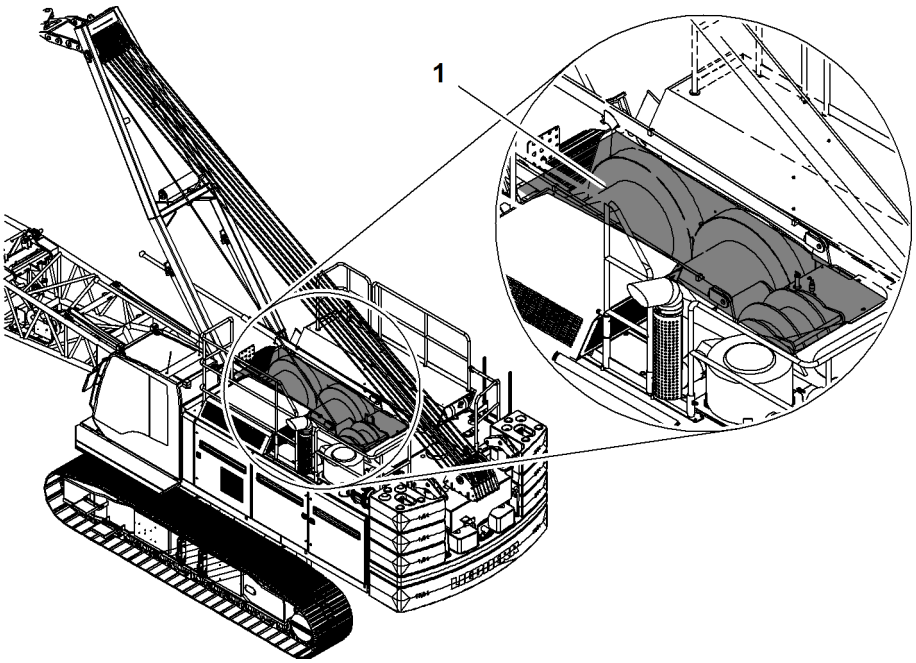

Fig. 5819: Danger zone uppercarriage (illustration of principle)

1 Danger zone

9.43.7 Putting down the rope of winch1 and winch2 with installed main boom

Ensure that the following conditions are fulfilled:
- ❑ The machine is secured to prevent unauthorised operation.
- ❑ The boom is laid down or detached.
- ❑ The rope is checked before luffing for damage as a result of incorrect handling or storage.
- ❑ Protective equipment is worn.
- ❑ Two helpers assist the machine operator.
- ❑ Tools and auxiliary materials are at hand.

LWN/LR.x/V03.01//Auslieferung/2015-06-03/en

copyright by
LIEBHERR

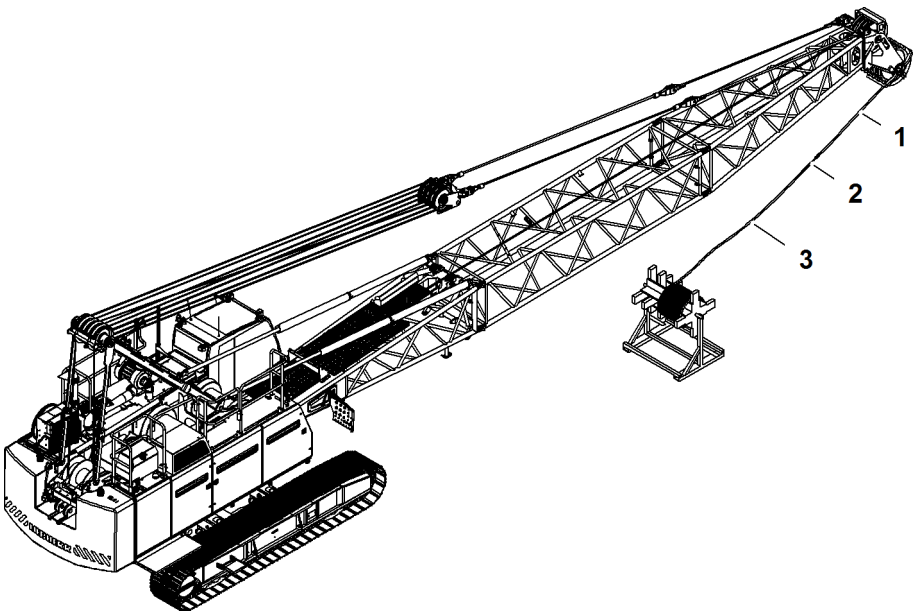

Fig. 5820: Putting down the rope of winch1 and winch2 with installed main boom (illustration of principle)

1 Auxiliary rope
2 Rope stocking
3 Rope

▶ Positioning the reel with rope **3** laterally behind the main boom head

LWN/LR.x/V03.01//Auslieferung/2015-06-03/en

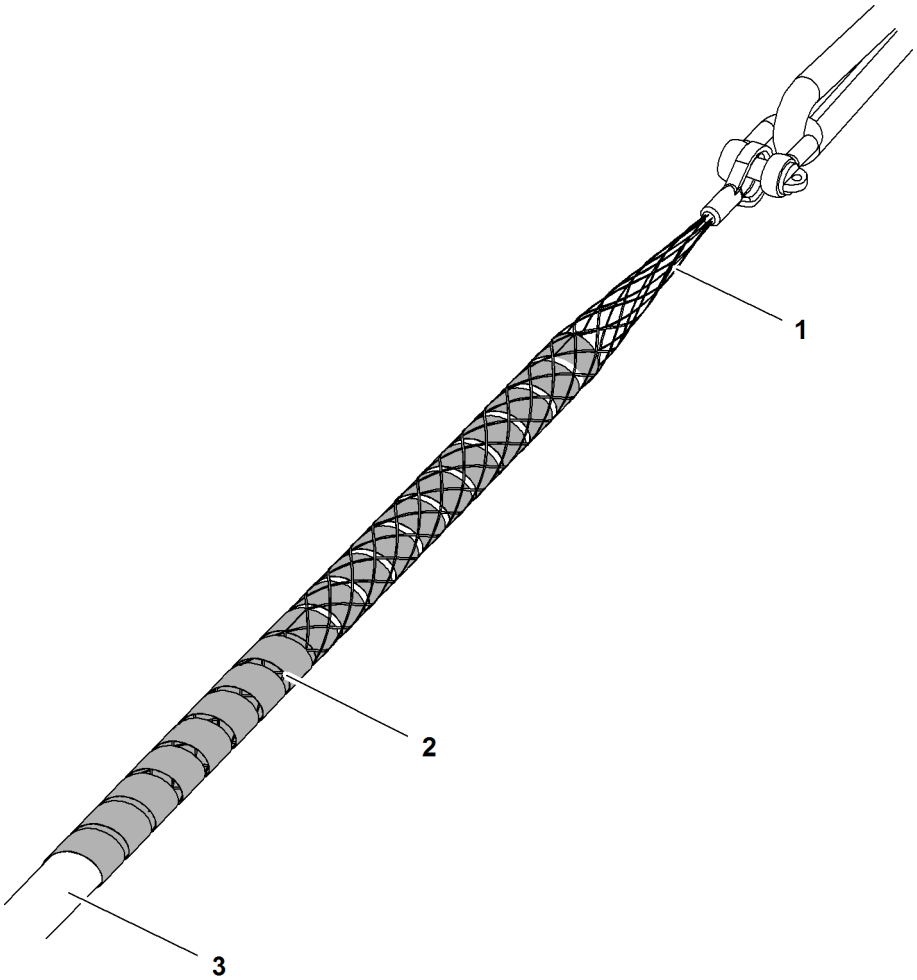

Fig. 5821: Rope stocking detail

1 Rope stocking
2 Textile tape
3 Rope

▶ Wrap rope end (ca. 1 m (3‘ 3“ ft-in)) with textile tape **2**.

▶ Pull rope stocking over wrapped rope end.

▶ Fixate rope stocking end with textile tape **2**.
▷ Rope connected with auxiliary rope.

▶ Reeve the auxiliary rope on the main boom head.

▶ Rope tensioned, guide laterally along main boom to machine.

▶ Throw auxiliary rope onto main boom with helper.

LWN/LR.x/V03.01//Auslieferung/2015-06-03/en

copyright by
LIEBHERR

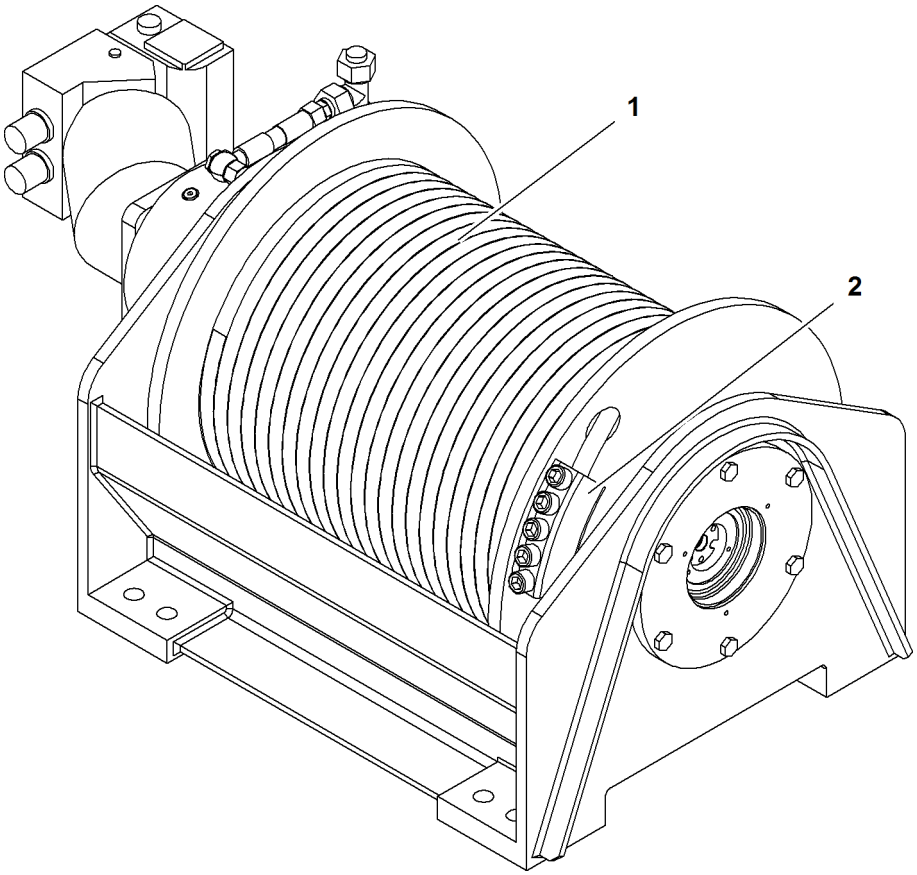

Fig. 5822: Winch on uppercarriage (illustration of principle)

1 Drum **2** Rope fixing point

▶ Attach auxiliary rope to drum **1** of winch1 or winch2.

WARNING
Rotating winches. Running rope.
Risk of crushing of limbs, death.

▶ Turn off machine when working on winches.

▶ Make sure that no persons are located in the danger zone.

▶ Ensure that the machine operator is in visual and voice contact with his assistant.

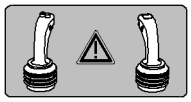

Procedure on a machine with two multi-directional control levers

LWN/LR.x/V03.01//Auslieferung/2015-06-03/en

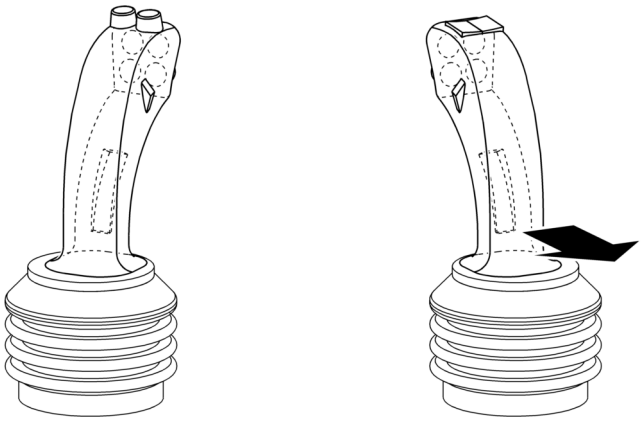

Fig. 5824: Lifting winch1

▶ Push the right multi-directional control lever backwards.
  ▷ Auxiliary rope is reeved on winch1.
  ▷ The vibration button on the right multi-directional control lever vibrates.

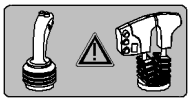

Procedure on a machine with a multi-directional control lever and a double T-lever.

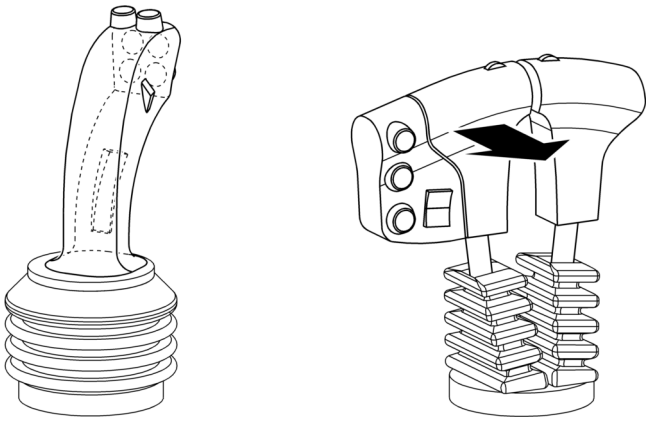

Fig. 5826: Lifting winch1

▶ Push the inner T-lever backwards.
  ▷ Auxiliary rope is reeved on winch1.
  ▷ The vibration button on the inner T-bar control lever vibrates.

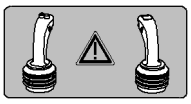

Procedure on a machine with two multi-directional control levers

LWN/LR.x/V03.01//Auslieferung/2015-06-03/en

copyright by
LIEBHERR

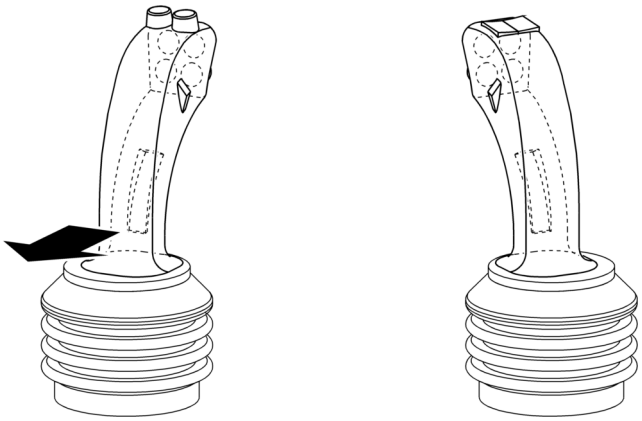

Fig. 5828: Lifting winch2

- ▶ Push the left multi-directional control lever backwards.
  - ▷ Auxiliary rope is reeved on winch2.
  - ▷ The vibration button on the left multi-directional control lever vibrates.

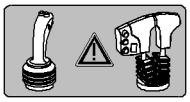

Procedure on a machine with a multi-directional control lever and a double T-lever.

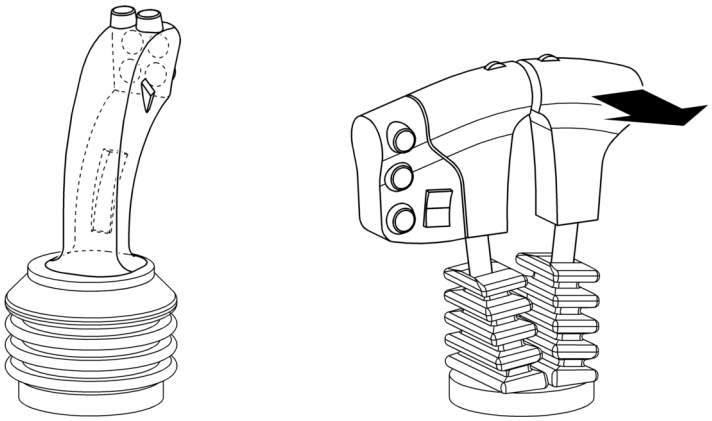

Fig. 5830: Lifting winch2

- ▶ Push the outer T-lever backwards.
  - ▷ Auxiliary rope is reeved on winch2.
  - ▷ The vibration button on the outer T-lever vibrates.

CAUTION
Incorrect handling!
Damage to rope.

- ▶ Rope may not scrape on the rope protection on the boom head or steel structure.
- ▶ Prevent slack rope on reel.

- ▶ Reeve auxiliary rope on winch1 or winch2 until rope is located in front of winch1 or winch2.
- ▶ Loosen rope stocking and unreel auxiliary rope from winch1 or winch2.

LWN/LR.x/V03.01//Auslieferung/2015-06-03/en

copyright by
LIEBHERR

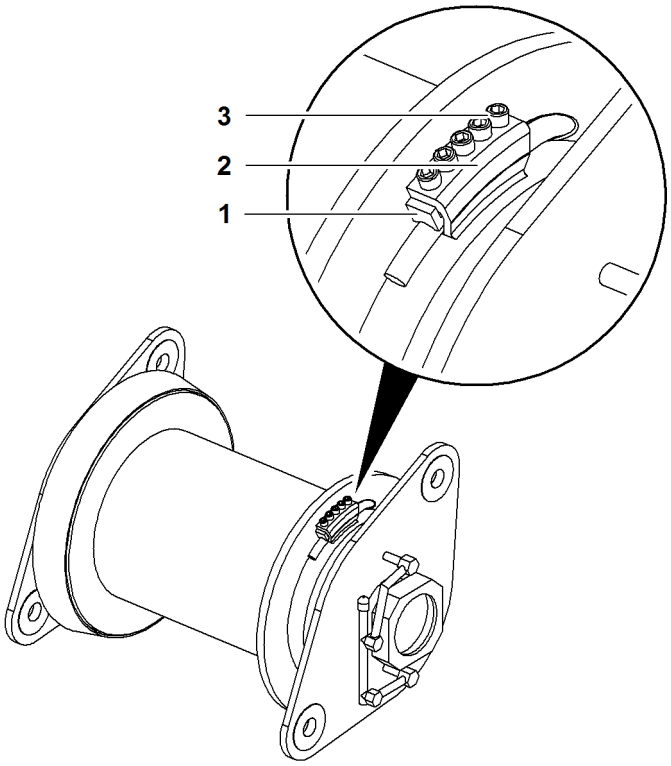

Fig. 5831: Rope fixing point (illustration of principle)

1 Rope wedge
2 Rope fixing point
3 Screw (5x)

▶ Remove cover on winch1 or winch2.

▶ Loosen screw **3** on rope fixing point **2** of winch1 or winch2.

▶ Remove rope wedge **1**.

WARNING
Unsecured walking on boom sections!
Risk of falling from boom sections.

▶ Only ever walk on boom sections if boom catwalks are fit.

▶ A fall arrest system must be used when working on boom sections to prevent falling.

▶ Lower winch1 or winch2 until 3-windings limit switch engages.
▷ Winch1 or winch2 stops.

▶ Bypass the 3-windings limit switch of winch1 or winch2 and move winch1 or winch2 three rotations lower.

LWN/LR.x/V03.01//Auslieferung/2015-06-03/en

copyright by
LIEBHERR

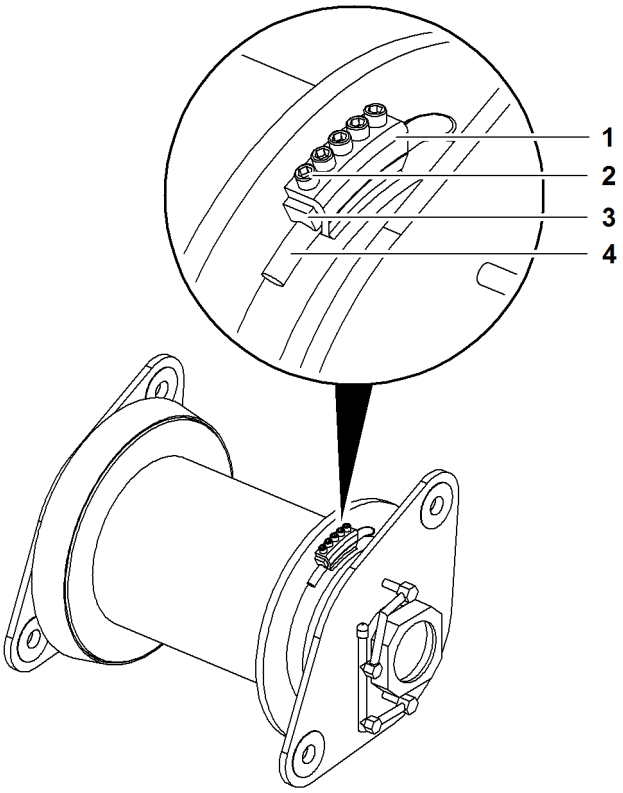

Fig. 5832: Installing the rope fixing point (illustration of principle)

1	Rope fixing point	**3**	Rope wedge
2	Screw	**4**	Rope

- ▶ Slide rope **4** through rope fixing point **1** of winch1 or winch2.
- ▶ Insert rope wedge **3**.
- ▶ Tighten the screw **2**.
- ▶ Reeve up one rope winding **4** on winch1 or winch2.
- ▶ Tighten all screws on rope fixing point **1**.
- ▶ Reeve rope **4** on winch1 and winch2 until 5 m (16‘ 5“ ft-in) of rope are located in front of the main boom head.
- ▶ Install hoist limit switch and load hook.
  ▷ Main boom is ready for erecting.

LWN/LR.x/V03.01//Auslieferung/2015-06-03/en

copyright by
LIEBHERR

9.44 rope drive

9.44.1 Checking the rope drive

The service life of the rope depends to a large extent on checking of the rope drive. Any fault on the rope drive will damage the rope. The rope will reach the end of its service life more quickly due to increased wear. The grooves of the winching drums and the pulleys are therefore checked for wear using test templates.

Test templates are related to the nominal groove base diameter.

Ensure that the following conditions are fulfilled:
- ❑ The machine is switched off.
- ❑ The machine is secured to prevent unauthorised operation.

Checking winch drum groove base for wear

Ensure that the following conditions are fulfilled:
- ❑ A suitable test template is available.
- ❑ The machine is switched off.
- ❑ The machine is secured to prevent unauthorised operation.

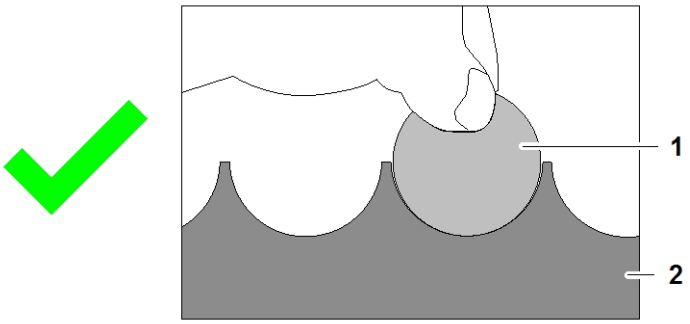

Fig. 5833: Permissible result when testing the groove base using a test template

1 Test template **2** Winch drum

The diameter of the measuring device (test template **1**) has to be nearly identical to the bottom of the groove and so easily fit into the respective groove. The groove diameter of the winch drum **2** has to be 4 % to 8 % larger than the nominal rope diameter.

▶ Use the test template **1** to check each individual groove on the winch drum **2**.

LWN/LR.x/V03.01//Auslieferung/2015-06-03/en

copyright by LIEBHERR

Troubleshooting
Is the diameter of the test template not the same as the groove base of the winch drum? Is there a crescent-shaped gap between the test template and the groove base?

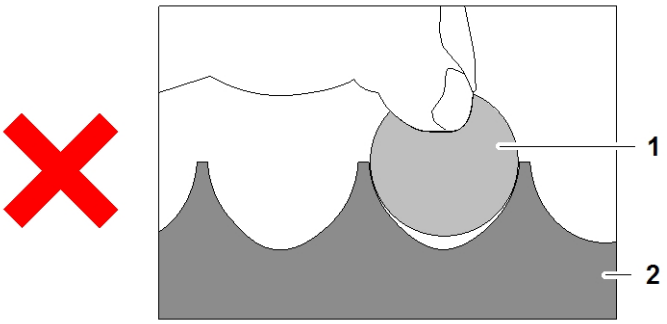

Fig. 5834: Impermissible result when testing the groove base using a test template

1 Test template **2** Winch drum

▶ Remove the rope.

▶ Smooth the surfaces of the grooves.

▶ Contact Liebherr after sales service.

LWN/LR.x/V03.01//Auslieferung/2015-06-03/en

copyright by
LIEBHERR

9.45 Rope pulleys

9.45.1 Checking all pulleys for ease of movement, signs of wear and damage

Check all pulleys for ease of movement

▶ Check pulleys for ease of movement.

If the pulleys do not move easily:
▶ Lubricate the pulley bearings (For more information see: 9.45.2 Lubricating the pulley bearings, page 1959) .

Check all steel pulleys for wear

The rope grooves often exhibit an imprint corresponding to the negative imprint of the rope in question. The impressions of the individual strands in the rope grooves are normal and not undesirable, since these produce a greater rope support surface, which increases the service life of the rope. When the rope is changed, the ridges must be removed and any sharp edges on the surface of the pulley smoothed.

Ensure that the following conditions are fulfilled:
❑ A suitable test template is available.
❑ The machine is switched off.
❑ The machine is secured to prevent unauthorised operation.

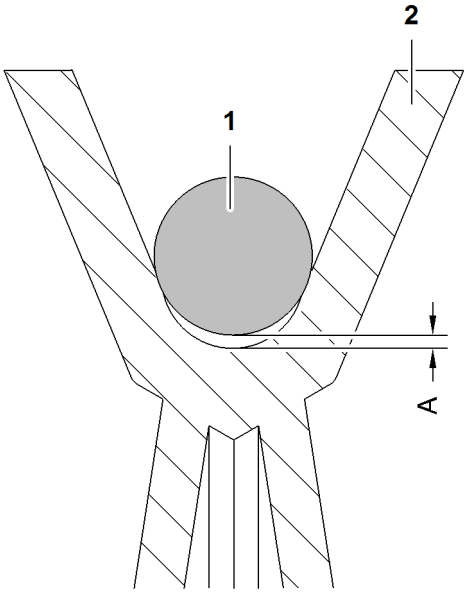

Fig. 5835: Checking steel pulleys for wear

1 Test template
2 Steel pulley
A Maximum permissible wear

The diameter of the measuring device (test template **1**) has to be nearly identical o the radius of the groove of the steel pulley **2**.

The maximum permissible wear **A** is 4 % to 8 % of the nominal rope diameter.

LWN/LR.x/V03.01//Auslieferung/2015-06-03/en

copyright by
LIEBHERR

▶ Use the test template **1** to check the radius of the groove in the steel pulley **2**.

If the actual wear exceeds the maximum permissible wear **A**:
▶ Change steel pulley **2**.

▶ Contact Liebherr after sales service.

Checking all plastic pulleys for wear

The rope grooves often exhibit an imprint corresponding to the negative imprint of the rope in question. The impressions of the individual strands in the rope grooves are normal and not undesirable, since these produce a greater rope support surface, which increases the service life of the rope. When the rope is changed, the ridges must be removed and any sharp edges on the surface of the pulley smoothed.

Ensure that the following conditions are fulfilled:
❑ A suitable test template is available.
❑ The machine is switched off.
❑ The machine is secured to prevent unauthorised operation.

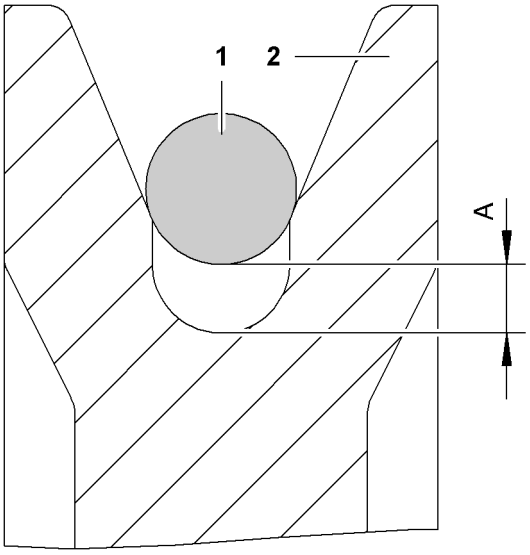

Fig. 5836: Checking plastic pulleys for wear

1 Test template
2 Plastic pulley
A Maximum permissible wear

The diameter of the measuring device (test template **1**) has to be nearly identical o the radius of the groove of the plastic pulley **2**.

The maximum permissible wear **A** is 50 % of the nominal rope diameter.

▶ Use the test template **1** to check the radius of the groove in the plastic pulley **2**.

If the actual wear exceeds the maximum permissible wear **A**:
▶ Change plastic pulley **2**.

▶ Contact Liebherr after sales service.

LWN/LR.x/V03.01//Auslieferung/2015-06-03/en

copyright by
LIEBHERR

Checking all pulleys for damage

NOTICE
Pulleys placed in the ground without protection!
Damage to the pulleys.

▶ Pulleys must only be laid on the ground with protective equipment.

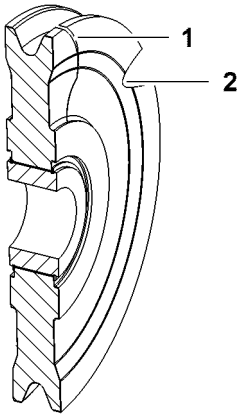

Fig. 5837: Damaged pulley

1 Crack **2** Nicks

The pulleys must be aligned with the running direction of the rope. They must also be in good condition, without wobbles or any other damage.

▶ Check pulleys for damage (nicks, wobbles, cracks, notches, etc.).

If the pulley is damaged:
▶ Replace the pulley.

▶ Contact Liebherr after sales service.

9.45.2 Lubricating the pulley bearings

Ensure that the following conditions are fulfilled:
❑ The grease gun from the Liebherr tool kit is present and filled with grease (For more information see: 9.2.3 Lubrication chart, page 1802) .
❑ The machine is switched off.
❑ The machine is secured to prevent unauthorised operation.
❑ The boom is laid down.

Ensure that the grease does not escape from or between the pulley bearings.

▶ Using the grease gun, press 10 g (0.02 lb) of grease onto the grease nipple.

9.45.3 Checking the bearing for proper seating and position

▶ Check the bearing for proper seating and position.

If the seating and position of the bearing or circlip is not correct:
▶ Correct the seating and position of the bearing.

▶ Contact Liebherr after sales service.

LWN/LR.x/V03.01//Auslieferung/2015-06-03/en

copyright by LIEBHERR

9.45.4 Cleaning plastic pulleys

NOTICE
Using dirty pulleys!
Damage to the pulleys.

▶ Clean dirt, gum, etc. from the plastic pulleys.

NOTICE
Unauthorised cleaning agent!
Damage to the pulleys.

▶ Only clean plastic pulleys with suitable cleaning agents.

Plastic pulleys are resistant to:
– Mineral oil
– Petrol
– Kerosene
– Diesel

Plastic pulleys are **not** resistant or not fully resistant to:
– Concentrated mineral acids (e.g. sulphuric acid, hydrochloric acid, nitric acid)
– Concentrated organic acids (e.g. formic acid)
– Concentrated bases (e.g. sodium, caustic potash solution or corrosive potassium salts)
– Alcohol other than ethyl alcohol, methyl alcohol and propyl alcohol
– Inorganic chlorides, e.g. calcium, lithium chloride, magnesium chloride and zinc chloride

▶ Clean plastic rope pulleys using a cleaning cloth and authorised cleaning agents.

LWN/LR.x/V03.01//Auslieferung/2015-06-03/en

copyright by
LIEBHERR

9.46 Rope suspension and rope fixation

9.46.1 Checking rope suspensions (rope clamps, rope thimbles) for wire breaks, absence of corrosion and tight fit of screw fittings

If a rope lock is being used as a rope suspension, the free rope end must be secured to prevent it being pulled through. This mechanism means that the free rope end must not be connected to the bearing rope strand in such a way that a force is transmitted.

Fitting the wire rope

The end of the new wire rope must be made up in such a way that there is absolutely no possibility of the rope structure loosening (e.g. as a result of flash-butt welding or hardening), assuming the rope structure is not separated by the type of rope fixation (e.g. splicing or casting).

NOTICE
Incorrect fitting of a new wire rope!
Risk of damage to the rope.

- ▶ No adjustments may be made, and/or attachments added, to the rope suspensions and rope fixation when laying a new wire rope.
- ▶ The rope end should be inserted in the same way as for the original wire rope.

- ▶ After fitting a new wire rope, check the rope suspensions regularly for correct position of the wire rope in the fixation and to ensure that it is correctly fastened to the adjacent structure (particularly screw fastenings to the structure).
- ▶ Check the device used to attach the rope suspension to the structure for any cracks.
- ▶ Check the cast rope ends regularly for wire breaks and corrosion where the wire rope emerges out of the cast metal.

If the rope shows any signs of damage, deformation, wear, etc.:
- ▶ cut open the rope end and replace the cast.
- ▶ Check rope suspensions with ferrules for wire breaks near the ferrule, cracks in the ferrule material and for slippage of the wire rope.

If the rope shows any signs of damage, deformation, wear, etc.:
- ▶ Shorten the wire rope and replace the connection.
- ▶ Check detachable rope suspensions (rope lock, rope clamps, drum) for wire breaks and corrosion of the wire rope, slippage of the rope at the termination and loosening of the fastening screws.

If the rope shows sign of corrosion or wire breaks:
- ▶ shorten and refasten the rope.

If there is rope slippage at the termination and the set screws are loose:
- ▶ tighten the connection.

LWN/LR.x/V03.01//Auslieferung/2015-06-03/en

copyright by
LIEBHERR

Checking the thimble connection

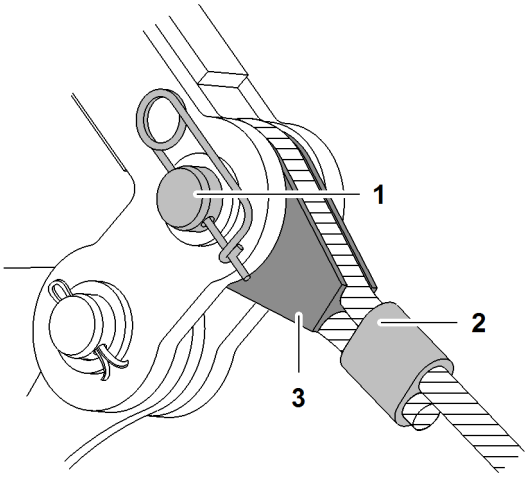

Fig. 5838: Rope thimble with ferrule

1 Bolting
2 Ferrule (wire clamp)
3 Rope thimble

Checking the ferrules for cracks and splitting

▶ Check the ferrules for cracks and splitting.

If the ferrules show signs of cracks or splitting:
▶ Remove the rope.

▶ Contact Liebherr after sales service.

Checking rope thimbles for corrosion, cracks and wire breaks

▶ Check rope thimbles for corrosion, cracks and wire breaks.

If the rope thimbles show any signs of corrosion, cracks or wire breaks:
▶ Replace the rope thimble.

▶ Contact Liebherr after sales service.

9.46.2 Checking the pocket locks

DANGER
Damaged pocket lock!
Load breakaway.

▶ Replace damaged pocket locks.

▶ Only use pocket locks that are in a completely flawless condition.

Immediately replace the pocket locks if the following damage is present:
– Cracks
– Corrosion
– Stiffness and sticking of the safety button
– Removability of the wire clamp or sealing sleeve

LWN/LR.x/V03.01//Auslieferung/2015-06-03/en

copyright by
LIEBHERR

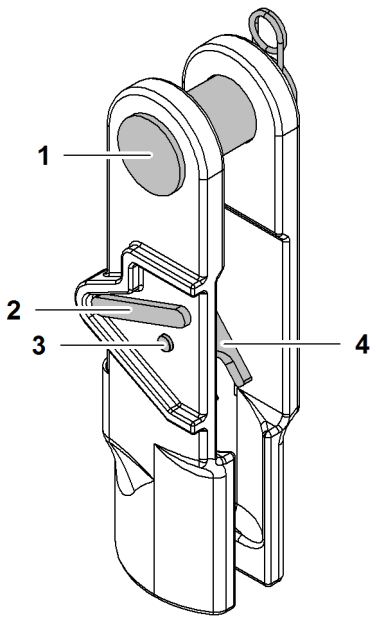

Fig. 5839: Pocket lock

1	Pin	**3**	Locking device
2	Safety latch	**4**	Safety button

▶ Check the pocket lock for cracks and corrosion.

▶ Check the pocket lock for the correct functioning of the self-locking safety latch **2**.

▶ Check the ease of movement of the safety button **4** for the safety latch **2**.

▶ Check that the pin **1** is present.

If the pocket lock is damaged or faulty in any way:
▶ Replace the pocket lock.

9.46.3 Checking the rope end fittings for cracks

▶ Check the ferrules for cracks and splitting.

If the ferrules show signs of cracks or splitting:
▶ Remove the rope.

▶ Contact Liebherr after sales service.

LWN/LR.x/V03.01//Auslieferung/2015-06-03/en

copyright by
LIEBHERR

9.46.4 Checking the rope fixing point

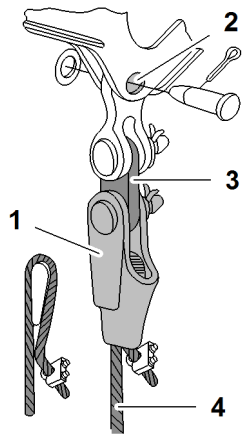

Fig. 5840: Rope lock and rope fixation

1	Rope lock	**3**	Intermediate connector
2	Rope fixation	**4**	Hoist rope

Checking the rope lock for damage and proper operation

▶ Check the rope lock for damage and proper operation.

If the rope lock is damaged or faulty in any way:
▶ Replace the rope lock.

Checking the rope clamp for tight fit

▶ Check rope clamp for tight fit.

If the rope clamp is loose:
▶ Remove the rope.

▶ Contact Liebherr after sales service.

LWN/LR.x/V03.01//Auslieferung/2015-06-03/en

copyright by
LIEBHERR

9.47 Cab

9.47.1 Check the windows of the cab for damage

▶ Check the windows of the cab for damage.

If any of the cab windows are damaged:
▶ Change the window.

▶ Contact Liebherr after sales service.

9.47.2 Checking that the cab door and the door lock work properly

Checking the operation of the cab door

▶ Check the operation of the cab door.

If the cab door does not move freely or does not latch in the open position:
▶ Spray the hinges with adhesive lubricant.

▶ Contact Liebherr after sales service.

Checking the operation of the door lock

▶ Check the operation of the door lock.

If the door lock is not operating correctly:
▶ Spray the locks with adhesive lubricant.

▶ Apply frost protection to the locks in the event of low ambient temperatures.

▶ Contact Liebherr after sales service.

9.47.3 Check cabin roof protection guard for damage, locking (in case of foldable design)

▶ Check cabin roof protection guard for damage.

If cabin roof protection guard is faulty in any way:
▶ Contact Liebherr customer service.

▶ Check locking (with foldable design).

If locking does not function perfectly (with foldable design):
▶ Contact Liebherr customer service.

9.47.4 Changing the windscreen wipers

Ensure that the following conditions are fulfilled:
❑ Ring spanner with width across flats 13 is available.
❑ Open spanner with width across flats 13 is available.
❑ New Liebherr windscreen wiper is available.

LWN/LR.x/V03.01//Auslieferung/2015-06-03/en

copyright by
LIEBHERR

NOTICE
Incorrect maintenance!
Risk of damage to the windscreen wiper nozzles.

▶ Note the windscreen wiper nozzles on the windscreen wiper mount.

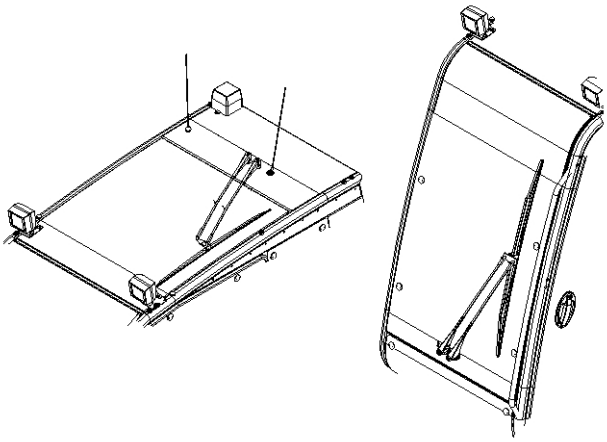

Fig. 5841: Changing the windscreen wipers

▶ Hold the screw with the open spanner and undo the nut using the ring spanner.

▶ Change the windscreen wiper.

Only tighten the screw by a certain degree so that the windscreen wiper can still move freely.

▶ Place the screw through the mount and windscreen wiper.

▶ Tighten the nut using the ring spanner.

9.47.5 Filling the windscreen cleaning system

Ensure that the following conditions are fulfilled:
❑ Suitable windscreen washer fluid is available.

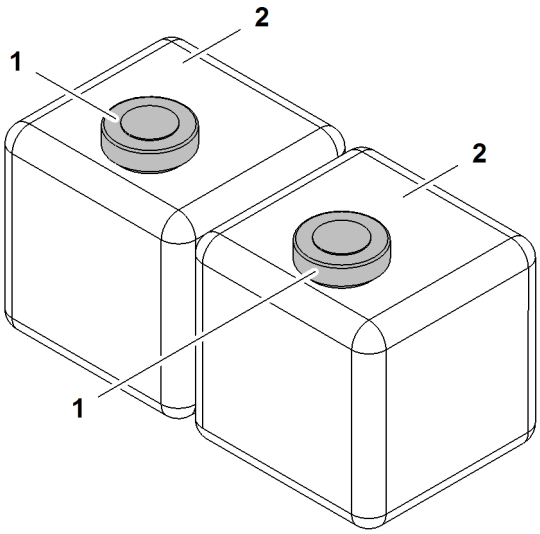

Fig. 5842: Filling the windscreen washer system

1 Cover **2** container

LWN/LR.x/V03.01//Auslieferung/2015-06-03/en

copyright by LIEBHERR

Containers are located behind the operator's seat in the cabin.

▶ Open cover **1**.

NOTICE
Unsuitable windscreen washer fluid!
Damage to the system.

▶ Fill the container **2** with suitable windscreen washer fluid only.

▶ Top up the windscreen washer fluid in the containers.

▶ Close cover **1**.

▶ If necessary clean the windscreen wiper nozzles on the windscreen wipers with a needle.

9.47.6 Checking outside mirrors and inside mirrors for damage

▶ Check outside mirrors and inside mirrors for damage.

If the mirrors are damaged or do not remain fixed in position:

▶ Replace the mirror.

▶ Tighten the set screws.

▶ Contact Liebherr after sales service.

9.47.7 Checking the operation of the hydraulic cab tilting device and for damage

Checking the operation of the hydraulic cab tilting device

▶ To check the operation of the hydraulic cabin tilting device: press the appropriate button on control panel *X11*.

If the hydraulic cab tilting device is faulty in any way:

▶ Do not operate the hydraulic cab tilting device.

▶ Contact Liebherr after sales service.

Checking hydraulic cylinders, hydraulic hoses and connections for leaks and damage

▶ Check hydraulic cylinders, hydraulic hoses and connections of the hydraulic cab tilting device for leaks and damage.

If the hydraulic cylinders, hydraulic hoses and connections are leaking or damaged:

▶ Do not operate the hydraulic cab tilting device.

▶ Contact Liebherr after sales service.

LWN/LR.x/V03.01//Auslieferung/2015-06-03/en

copyright by
LIEBHERR

9.47.8 Checking hydraulic cabin elevation for function and damage

Checking the operation of the acoustic warning signal

When the safety lever is folded up, the acoustic warning signal must sound when the cab is elevated.

▶ Check the operation of the acoustic warning signal.

If the acoustic warning signal is faulty in any way:
▶ Do not operate the hydraulic cab elevation (system).

▶ Contact Liebherr after sales service.

Checking the operation of the operating elements (valves, displays etc.)

▶ Check the operation of the operating elements (valves, displays etc.).

If the cab elevation (system) operating elements (valves. display, etc.) are faulty in any way:
▶ Do not operate the hydraulic cab elevation (system).

▶ Contact Liebherr after sales service.

Checking that the safety chain is present and working properly

The safety chain must prevent the machine operator from falling out of an open cab door.

▶ Check that the safety chain is present and working properly.

If the safety chain is missing, damaged or faulty in any way:
▶ Do not operate the hydraulic cab elevation (system).

▶ Contact Liebherr after sales service.

Checking hydraulic hoses and connections for leaks and damage

▶ Check hydraulic hoses and connections for leaks and damage.

If hydraulic hoses or connections show leaks or damage:
▶ do not operate hydraulic cabin elevation.

▶ Contact Liebherr customer service.

Checking emergency descent equipment for presence and function

▶ Check emergency descent equipment for presence and function.

If emergency descent equipment does not function perfectly or is missing:
▶ do not operate hydraulic cabin elevation.

▶ Contact Liebherr customer service.

LWN/LR.x/V03.01//Auslieferung/2015-06-03/en

copyright by
LIEBHERR

Checking the cabin's suspension point for damage

▶ Check cabin's suspension point for damage.

If cabin's suspension point is damaged:
▶ do not operate hydraulic cabin elevation.

▶ Contact Liebherr customer service.

Checking the function of the emergency lowering system

▶ Check function of cabin's emergency lowering system.

If cabin's emergency lowering system is not operating correctly:
▶ do not operate hydraulic cabin elevation.

▶ Contact Liebherr customer service.

Checking pins for presence of locking elements

▶ Check pins for presence of locking elements.

If pin locking elements are not in place:
▶ do not operate hydraulic cabin elevation.

▶ Replace missing locking elements.

9.47.9 Cleaning or replacing the filter insert in the cabin

The cleaning intervals of the filter insert depend on the degree of contamination of the ambient air, the frequency of use and the type of contamination. The full filter inserts can be cleaned by tapping out, blowing out or rinsing in lukewarm water. If the filter insert can no longer be cleaned, it must be replaced.

LWN/LR.x/V03.01//Auslieferung/2015-06-03/en

copyright by
LIEBHERR

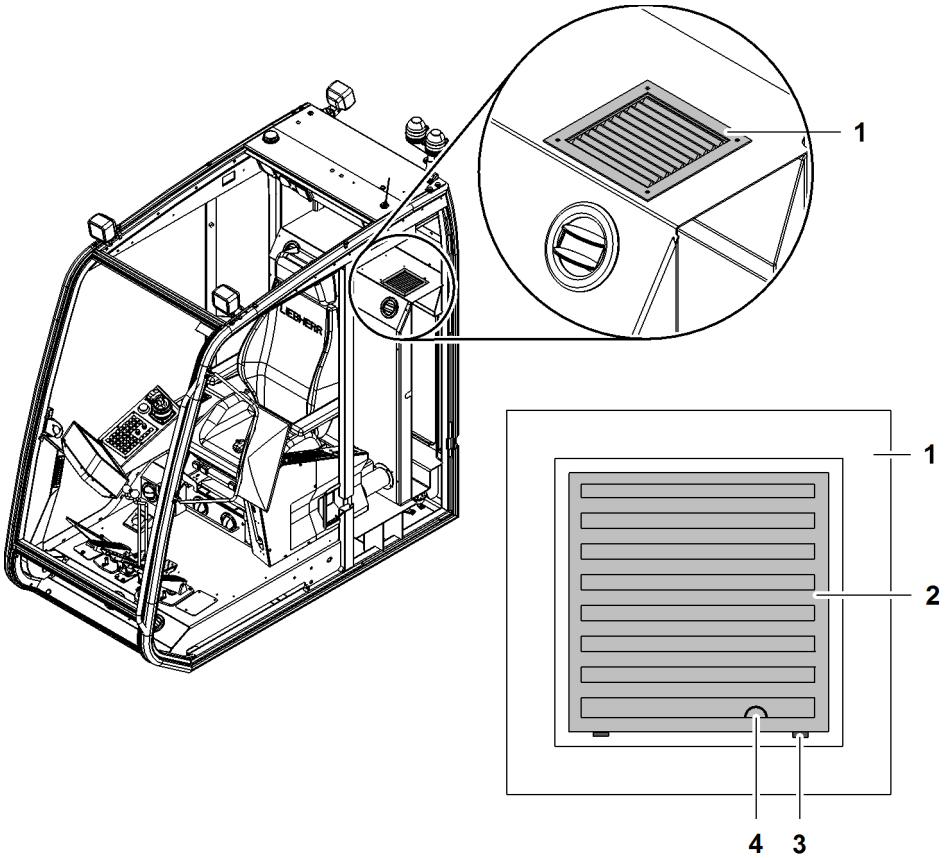

Fig. 5843: Replacing the filter insert in the cabin

1	Fan	**3**	Recess
2	Frame with filter insert	**4**	Marking

▶ Insert screwdriver into the recess **3** and lift up.

The filter insert has a smooth and a coarse side. The filer insert is installed with the coarse side **facing up**.

▶ Exchange the filter insert.

The frame **2** with filter insert has a marking **4**. This marking **4** must face the operator's seat when installing.

▶ Insert frame **2** with filter insert.

LWN/LR.x/V03.01//Auslieferung/2015-06-03/en

copyright by
LIEBHERR

9.48 Ventilation, heating and air-conditioning

WARNING
Unauthorized maintenance on air conditioning system!
Poisoning, frostbite.

▶ Work on the air conditioning system may only be carried out by authorized service personnel.

9.48.1 Checking the recirculated air filter for contamination

Cleaning intervals depend on the degree of contamination of the ambient air, the frequency of use and the type of contamination.

The full filter inserts can be cleaned by tapping out, blowing out or rinsing in lukewarm water. If the filter insert can no longer be cleaned, it must be replaced.

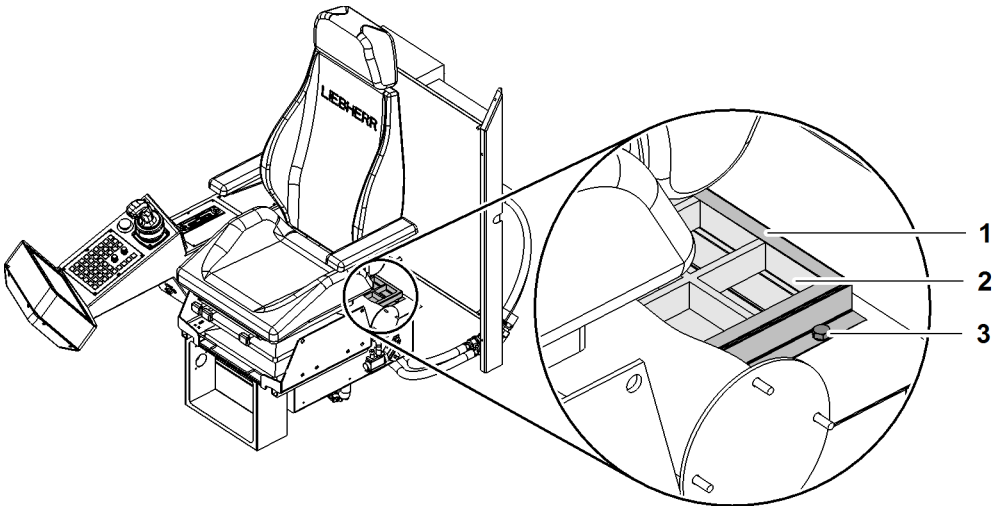

Fig. 5844: Checking the recirculated air filter for contamination

1 Retention grid
2 Recirculated air filter
3 Screw (4x)

▶ Check recirculated air filter **2** for contamination.

Note
Recirculated air filter **2** is wet after cleaning!

▶ Ensure that recirculated air filter **2** is dry before reinserting it.

If recirculated air filter **2** is dirty:
▶ Clean or replace recirculated air filter **2**.

LWN/LR.x/V03.01//Auslieferung/2015-06-03/en

copyright by LIEBHERR

9.48.2 Replacing the recirculated air filter

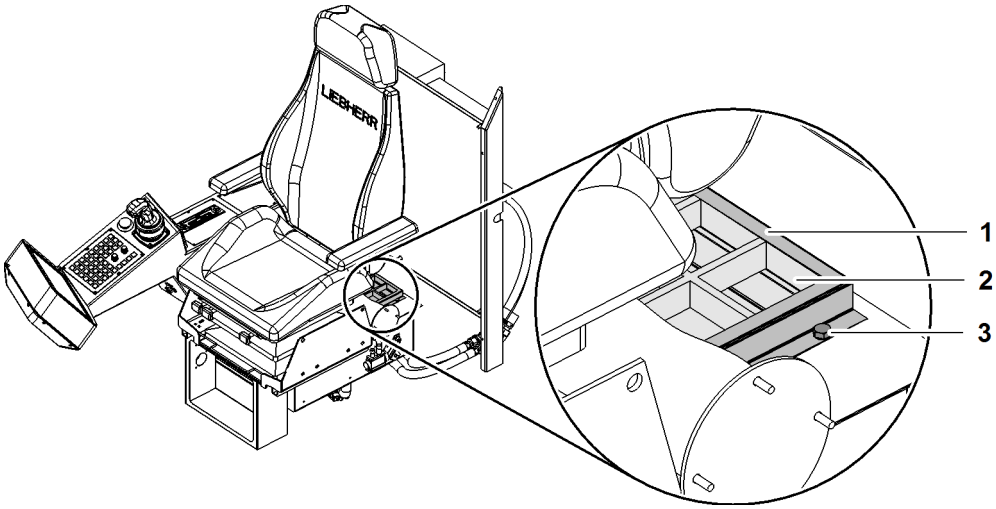

Fig. 5845: Replacing the recirculated air filter

1 Retention grid
2 Recirculated air filter
3 Screw (4x)

▶ Fold armrests of operator's seat up.

▶ Fold backrest of operator's seat forward.

▶ Slide operator's seat forward.

▶ Remove screws **3**.

▶ Remove retention grid **1**.

▶ Remove recirculated air filter **2** from retention grid **1**.

Note
Improper installation of recirculated air filter **2**!
Improperly installed recirculated air filter **2** reduces air conditioning system performance.

▶ Observe installation direction of recirculated air filter **2**.

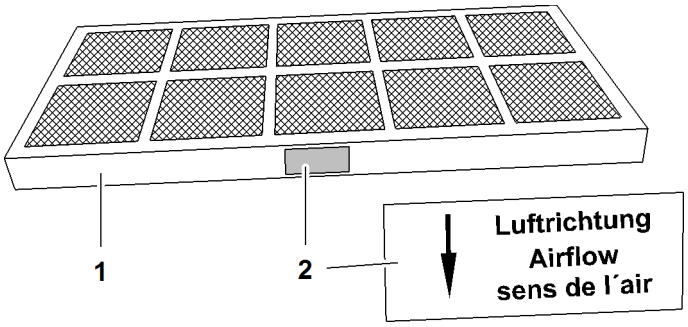

Fig. 5846: Recirculated air filter

1 Recirculated air filter
2 Sign

The arrow of the sign **2** must point toward the climatic box when installing the recirculated air filter **1**.

▶ Insert new recirculated air filter **1** into retention grid.

LWN/LR.x/V03.01//Auslieferung/2015-06-03/en

- ▶ Insert retention grid.
- ▶ Tighten screws.
- ▶ Slide operator's seat back.
- ▶ Fold backrest of operator's seat backward.
- ▶ Fold armrests of operator's seat down.
  - ▷ Recirculated air filter has been replaced.

9.48.3 Checking the fresh air filter for contamination

Cleaning intervals depend on the degree of contamination of the ambient air, the frequency of use and the type of contamination.

The full filter inserts can be cleaned by tapping out, blowing out or rinsing in lukewarm water. If the filter insert can no longer be cleaned, it must be replaced.

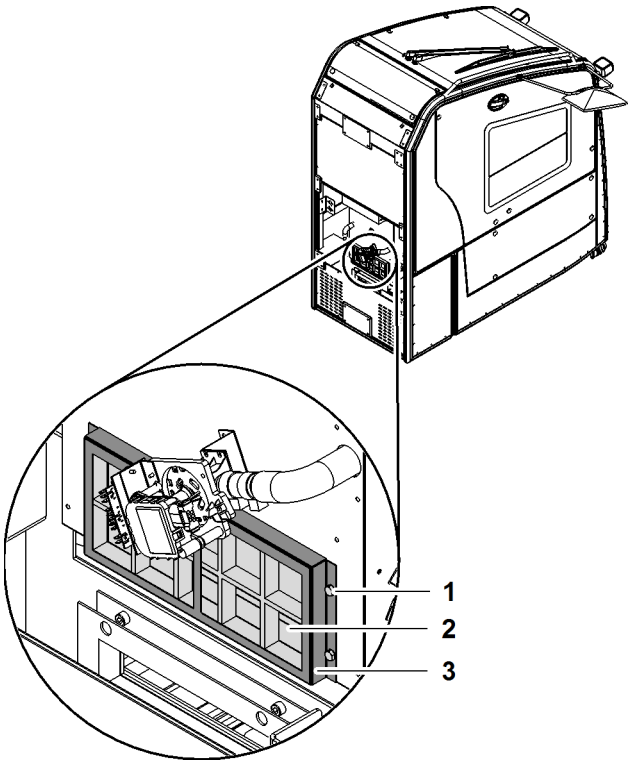

Fig. 5847: Checking the fresh air filter for contamination

1 Screw (4x)
2 Fresh air filter
3 Retention grid

- ▶ Remove central bottom plate underneath cabin.
- ▶ Check fresh air filter **2** for contamination.

Note
Fresh air filter **2** is wet after cleaning!

- ▶ Ensure that fresh air filter **2** is dry before reinserting it.

LWN/LR.x/V03.01//Auslieferung/2015-06-03/en

copyright by LIEBHERR

If fresh air filter **2** is dirty:

▶ Clean or replace fresh air filter **2**.

▶ Install central bottom plate underneath cabin.

9.48.4 Replacing the fresh air filter

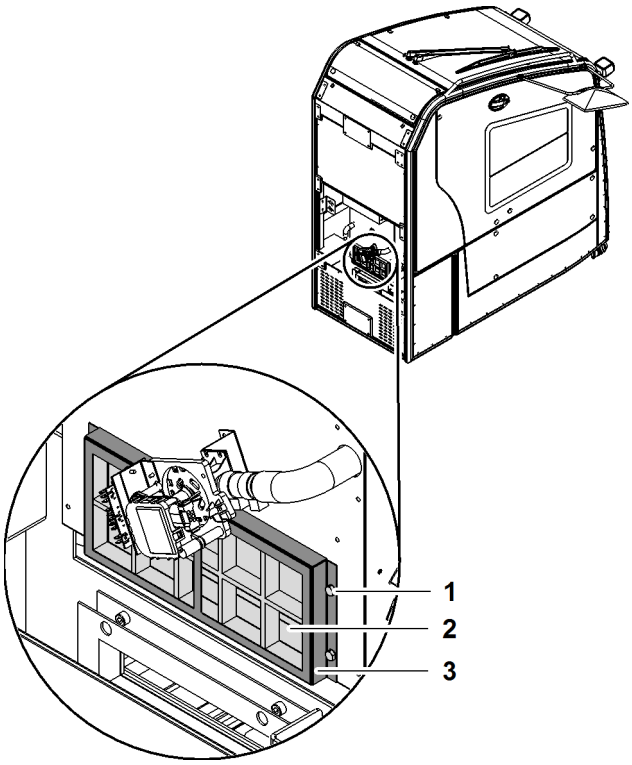

Fig. 5848: Replacing the fresh air filter

1 Screw (4x)
2 Fresh air filter
3 Retention grid

Note

Liebherr recommends:

▶ Tilting the cabin upwards.

▶ Turn uppercarriage.

▶ Remove central bottom plate underneath cabin.

▶ Remove screws **1**.

▶ Remove retention grid **3**.

▶ Remove fresh air filter **2** from retention grid **3**.

Note

Improper installation of fresh air filter **2**!
Improperly installed fresh air filter **2** reduces air conditioning system performance.

▶ Observe installation direction of fresh air filter **2**.

LWN/LR.x/V03.01//Auslieferung/2015-06-03/en

copyright by LIEBHERR

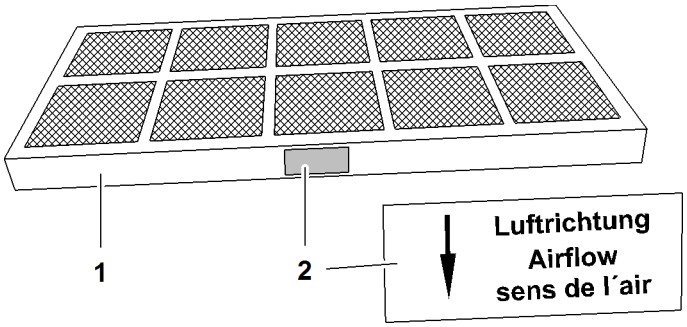

Fig. 5849: Fresh air filter

1	Fresh air filter	**2**	Sign

The arrow of the sign **2** must point toward the climatic box when installing the fresh air filter **1**.

- ▶ Insert new fresh air filter **1** into retention grid.
- ▶ Insert retention grid.
- ▶ Tighten screws.
- ▶ Install central bottom plate underneath cabin.
  - ▷ Fresh air filter has been replaced.

9.48.5 Checking the coolant level in the inspection glass

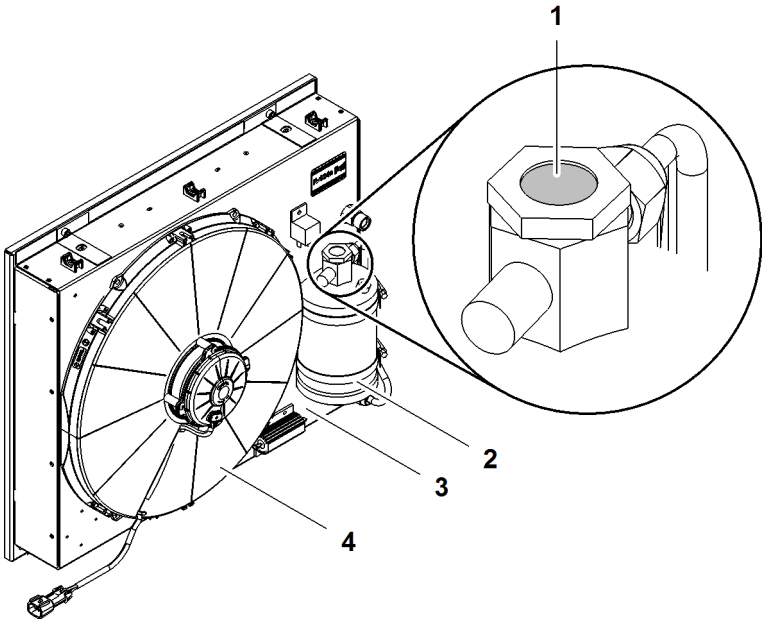

Fig. 5850: Checking the coolant level in the inspection glass

1	Inspection glass	**3**	Condenser
2	Dryer	**4**	Fan

LWN/LR.x/V03.01//Auslieferung/2015-06-03/en

copyright by
LIEBHERR

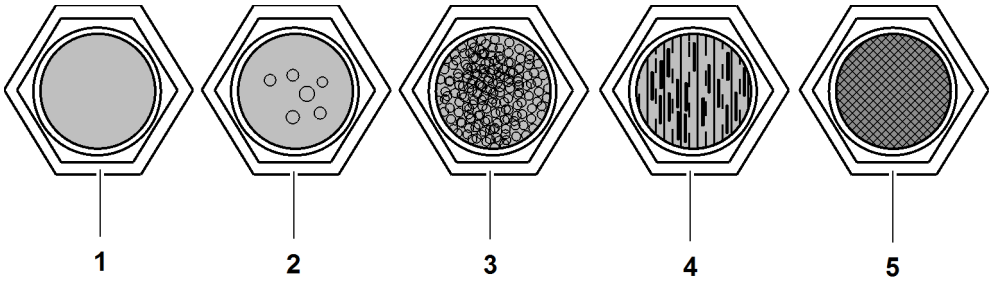

Fig. 5851: Inspection glass with different coolant levels

1 Clear coolant
2 Bubbles in coolant
3 Froth in coolant
4 Smears in coolant
5 Gray coolant

Clear coolant **1**:
– Flowing coolant
– Coolant level is OK
– System working

Bubbles in coolant **2**:
– Few bubbles in flowing coolant
– Level too low
– Recommendation: Top up coolant in 50 gram intervals.

Froth in coolant **3**:
– Frothing coolant and no clear fluid visible
– Level too low
– Air might be in the system
– Recommendation: Top up coolant in 100 gram intervals.

Smears in coolant **4**:
– Tool much oil in circuit
– Wrong oil in circuit

Gray coolant **5**:
– Substantial abrasion in compressor
– Oil has changed color

▶ Put air conditioning system into operation for at least ten minutes.

▶ Watch inspection glass.

If coolant is not clear:
▶ Contact Liebherr customer service.

LWN/LR.x/V03.01//Auslieferung/2015-06-03/en

copyright by
LIEBHERR

9.48.6 Checking the condenser for contamination

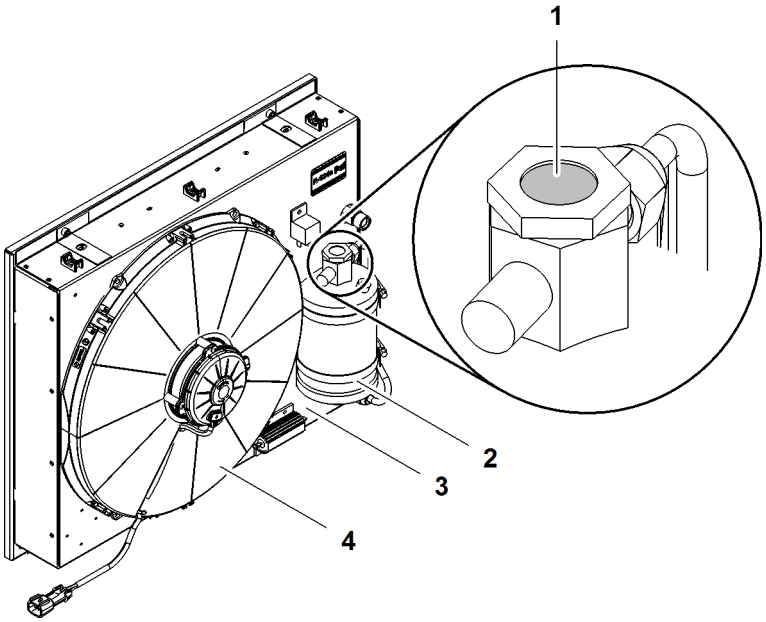

Fig. 5852: Checking the condenser for contamination

1	Inspection glass	**3**	Condenser
2	Dryer	**4**	Fan

▶ Check the condenser **3** for contamination.

If condenser **3** is dirty:
▶ Remove fan **4**.

NOTICE
Water in electric components!
Short circuit.

▶ Do not clean electric components with high-pressure cleaner.

▶ Clean condenser **3** with high-pressure cleaner from the inside out.

Note

Liebherr recommends:
▶ Do not set pressure of high-pressure cleaner above 120 bar (1,740.44 psi).

▶ Keep at least 200 mm (7.87“ in) distance with high-pressure cleaner from condenser.

LWN/LR.x/V03.01//Auslieferung/2015-06-03/en

copyright by
LIEBHERR

9.48.7 Checking the condenser for loose leads, loos screws and corrosion

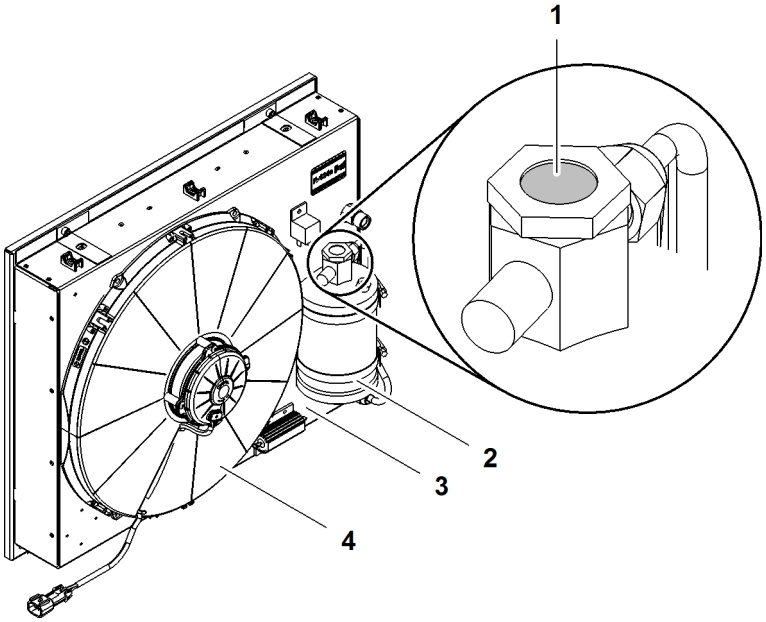

Fig. 5853: Checking the condenser for loose leads, loos screws and corrosion

1	Inspection glass	**3**	Condenser
2	Dryer	**4**	Fan

▶ Check coolant leads for abrasion spots.

▶ Check coolant leads for tight fit.

▶ Check electric components for corrosion.

▶ Check electric components for tight fit.

▶ Check mechanic parts for tight fit.

Note
Oily screw connections are a sign of leakage!

Liebherr recommends:
▶ Observe oily screw connections.

9.48.8 Checking the fan on condenser for function, tight fit and damage

▶ Check fan on condenser for tight fit.

▶ Check fan on condenser for damage.

▶ Turn on air conditioning system.

If the fan on the condenser does not turn:
▶ Contact Liebherr customer service.

LWN/LR.x/V03.01//Auslieferung/2015-06-03/en

copyright by
LIEBHERR

9.48.9 Checking the climate box for contamination

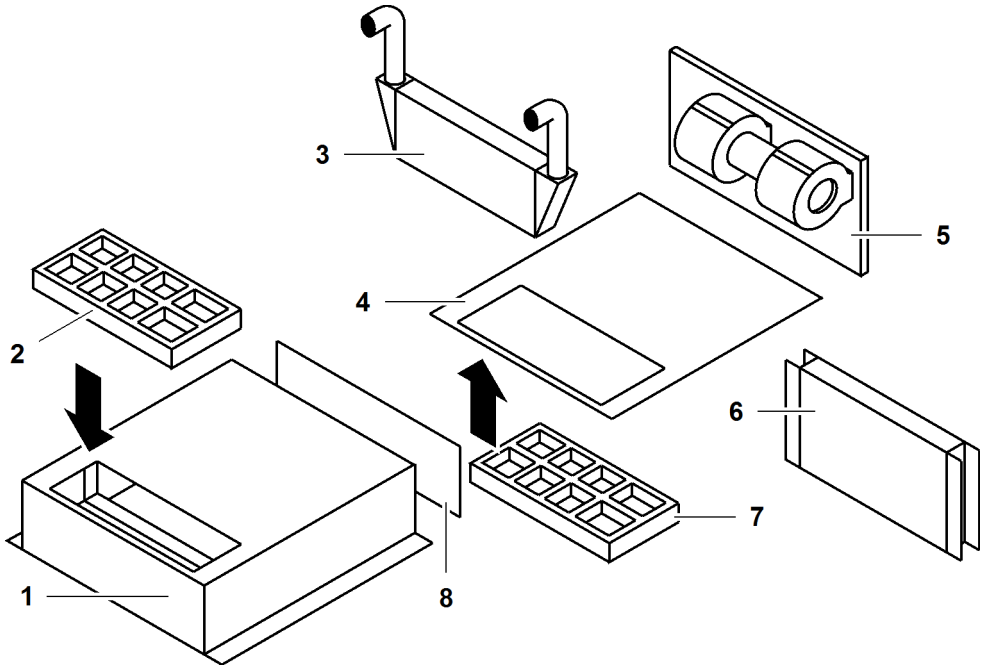

Fig. 5854: Checking the climate box for contamination (illustration of principle)

1	Climatic box	**4**	Bottom plate of climatic box	**7**	Fresh air filter
2	Recirculated air filter	**5**	Blower	**8**	Flap recirculated air/fresh air
3	Heat exchanger	**6**	Evaporator		

When replacing the fresh air filter **7**, it is possible to check for contamination through the opening of the heat exchangers **3**.

▶ Check heat exchanger **3** for contamination.

If heat exchanger **3** is dirty:
▶ Clean heat exchanger **3**.

When replacing the recirculated air filter **2**, it is possible to check the ease of movement of the recirculated air/fresh air flap **8**.

▶ Check recirculated air/fresh air flap **8** for movement.

If the recirculated air/fresh air flap **8** cannot be moved:
▶ Contact Liebherr customer service.

9.48.10 Checking the dryer for damage and corrosion

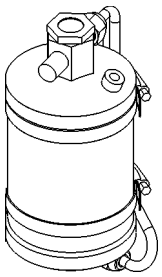

Fig. 5855: Checking the dryer for damage and corrosion

LWN/LR.x/V03.01//Auslieferung/2015-06-03/en

copyright by
LIEBHERR

▶ Check dryer for damage and corrosion.

If dryer is damaged:
▶ Contact Liebherr customer service.

9.48.11 Starting the ventilation, heating, air conditioning, external air conditioning system* and auxiliary heating system* and ensuring that sufficient antifreeze has been added to the water circuit

Putting the ventilation system into operation

The LED of the button indicates the selected blower level. Three different fan speeds are possible.

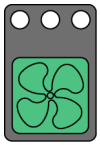

▶ Press the *Heating/air conditioning fan speed* button on control panel *X11*.
▷ The fan blows.

Putting the heating system into operation

Make sure the following prerequisites are met:
❑ Diesel engine is switched on.
❑ Ventilation is switched on.
❑ Cabin door and windscreen are closed.

▶ Turn rotary control knob *Heating/air conditioning system temperature* on control panel *X11* to the right (red zone).
▷ Heating is turned up.

▶ Turn rotary control knob *Temperature heating/air conditioning system* on control panel *X11* to the left (blue zone).
▷ Heating is turned down.

Activating the air conditioning system

WARNING
Leaks in air conditioning coolant circuit in an enclosed space!
Risk of suffocation.

If there is a high coolant concentration in the air:
▶ Immediately leave the closed room (cabin).

CAUTION
Rotating parts!
Risk of injury to limbs.

▶ Make sure that there are no persons in the vicinity of the fan on the condenser.

Make sure the following prerequisites are met:
❑ Diesel engine is switched on.
❑ Ventilation is switched on.

LWN/LR.x/V03.01//Auslieferung/2015-06-03/en

copyright by LIEBHERR

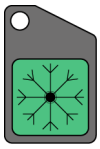

▶ Press the *Air conditioning system* button on control panel *X11*.
▷ Air conditioning system is switched on.

Activating the external air conditioning system*

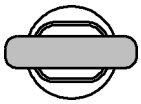

▶ Turn ignition key on control unit *External air conditioning system* to position “1”.

▷ Software version is displayed for two seconds on the display of control unit *External air conditioning system*:

```
HATZ  multiflex
S05204  43/2011
```

Fig. 5861: Software version

▷ Operating state before start is shown on the display of control unit *External air conditioning system*:

```
!!! OIL !!!      0,0 h
00°              0000
```

Fig. 5862: Operating state before start

The following parameters appear:
– Display top left: Error oil pressure indicator
– Display top right: Operating hours
– Display bottom left: Engine temperature
– Display bottom right: Diesel engine RPM

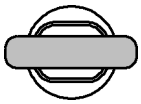

▶ Turn ignition key on control unit *External air conditioning system* briefly to position “2”.

▷ Diesel engine is switched on.
▷ External air conditioning system is in operation.
▷ Operating state after start is shown on the display of control unit *External air conditioning system*.

```
OIL ✓            0,0 h
25°              1000
```

Fig. 5864: Operating state after start

The following parameters appear:
– Display top left: Oil pressure indicator OK
– Display top right: Operating hours
– Display bottom left: Engine temperature
– Display bottom right: Diesel engine RPM

▶ Turn rotary control knob *Temperature heating /air conditioning system* on control panel *X11* to the desired temperature.

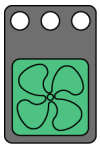

▶ Press the button *Fan speed heating/air conditioning system* on control panel *X11* until the desired fan speed is set.
▷ External air conditioning system cools down or heats up cabin to the desired temperature.

LWN/LR.x/V03.01//Auslieferung/2015-06-03/en

copyright by LIEBHERR

Activating auxiliary heating*

Make sure the following prerequisites are met:
❑ Ignition is turned on.

▶ Turn rotary control knob *Temperature heating/air conditioning system* on control panel *X11* to the right (red zone).

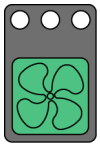

▶ Press the button *Fan speed heating/air conditioning system* on control panel *X11* until the lowest fan speed is set.

▶ Press the button *Instant heating* on control unit *Auxiliary heating*.

▶ Turn off auxiliary heating after ten minutes.

9.48.12 Replacing the fuel filter of auxiliary water heating

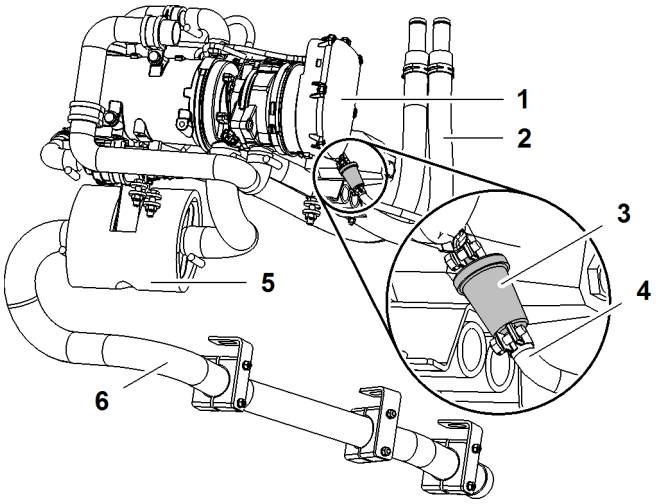

Fig. 5870: Replacing the fuel filter of auxiliary water heating (illustration of principle)

1	Auxiliary water heating*	**4**	Fuel line
2	Warm water pipe	**5**	Muffler
3	Fuel filter	**6**	Exhaust system

CAUTION
Hot surface!
Risk of skin burns.

▶ Make sure that the exhaust system **6** of the auxiliary water heating **1** has cooled down.

LWN/LR.x/V03.01//Auslieferung/2015-06-03/en

copyright by
LIEBHERR

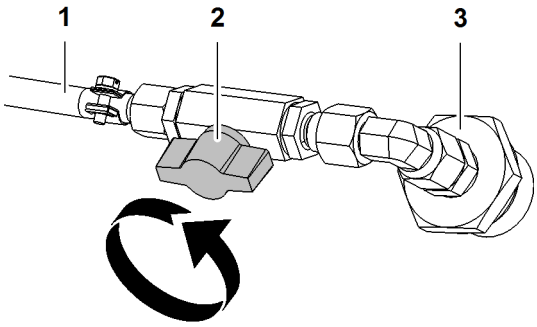

Fig. 5871: Close gate valve on fuel line

1 Fuel line
2 Gate valve/locking element
3 Connection of fuel tank

With the fuel tank, the connection **3** of the fuel line **1** is the auxiliary water heating. A gate valve **2** is installed for each auxiliary heating system on the fuel line **1**.

▶ Close gate valve **2** on fuel line **1**.

Note
Seeping of fuel into the soil!
Risk of contamination to soil and groundwater.

▶ Collect fuel in trap.

▶ Put trap underneath.

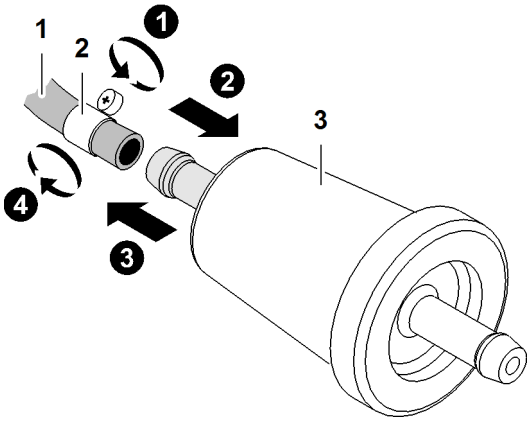

Fig. 5872: Replacing the fuel filter of auxiliary water heating

1 Fuel line
2 Screw clamp (2x)
3 Fuel filter

▶ Undo screw clamps **2**.

▶ Remove fuel filter **3** from fuel line **1**.

Note
Environmental pollution!

▶ Dispose of fuel filters **3** and fuel in accordance with national and international guidelines and regulations.

▶ Insert new fuel filter **3** on fuel lines **1**.

LWN/LR.x/V03.01//Auslieferung/2015-06-03/en

copyright by
LIEBHERR

- ▶ Tighten screw clamps **2**.
- ▶ Open gate valve on fuel line.

LWN/LR.x/V03.01//Auslieferung/2015-06-03/en

copyright by
LIEBHERR

9.49 HATZ diesel engine* (see operation manual of the engine manufacturer on CD)

9.49.1 Checking the belt drive

Make sure the following prerequisites are met:
❑ HATZ diesel engine is protected from unauthorized start-up.

▶ Check belt drive for tension.

▶ Check belt drive for loose screws.

▶ Check belt drive for correct function.

9.49.2 Replacing the belt drive including vibration damper, deflection pulley and springs

The belt drive service kit consists of the following components:
– Belt drive
– Vibration damper
– Deflection pulley
– Spring (2x)

▶ Deinstall vibration damper.

▶ Unhook springs on generator.

▶ Fold generator up.

▶ Remove belts.

▶ Deinstall bearing support of deflection pulley.

▶ Replace deflection pulley.

▶ Reinstall bearing support.

▶ Insert new belts.

▶ Suspend new springs on generator.

▶ Install vibration damper.

▶ Check belt alignment.

LWN/LR.x/V03.01//Auslieferung/2015-06-03/en

copyright by LIEBHERR

9.50 Machine care

9.50.1 Cleaning the machine

Liebherr recommends that the external machine parts are cleaned regularly to maintain an even surface quality. This is strongly advised following work with highly corrosive materials.

NOTICE
Unsuitable cleaning agent is used!
The surfaces will be damaged.

- ▶ Do not use any aggressive cleaning agents.
- ▶ Do not use any abrasive cleaning agents.
- ▶ Do not use any phosphate cleaners.
- ▶ Do not use and solvents or solvent-containing cleaning agents.
- ▶ Only use cleaning agents with a pH value of ≤ 12.
- ▶ Ensure that the cleaning agent to water ratio does not exceed 3%.
- ▶ Rinse with clear water (not salt water).

Ensure that the following conditions are fulfilled:
- ❑ The machine is switched off and secured to prevent unauthorised operation.
- ❑ The machine has cooled down.
- ❑ The battery main switch is switched off.
- ❑ The boom is laid down.

CAUTION
Hot steam and compressed air!
Risk of burns.

- ▶ Wear protective equipment.

The machine may only be cleaned with a maximum pressure of 150 bar (2,175.56 psi) at a distance of at least 40 cm (1‘ 4“ ft-in). Do not exceed water temperature of 80 °C (176 °F).

The water jet must not be directed onto the following components:
- – Intake manifolds for drawing air to cool the engine
- – machinery room
- – Electrical plug-in connections
- – Cab interior

- ▶ Clean the machine using a high-pressure cleaner.

Note
Environmental pollution!

- ▶ Dispose of the oil-stained tools and cleaning agents in accordance with national and international guidelines and regulations.
- ▶ Cleaning water must pass through an oil separator before it enters the sewer system.

LWN/LR.x/V03.01//Auslieferung/2015-06-03/en

copyright by
LIEBHERR

9.50.2 Preserving the machine

The following types of preservation are available:
- Maintaining preservation of the machine
- Preserving the machine for storage for up to 7 months
  - Preserving the machine for indoor storage
  - Preserve machine for outdoor storage
- Preserve machine for storage for more than 7 months
- Preserve machine for decommissioning
- Preserve machine for reselling

NOTICE
Insufficient or incorrect preservation agents are applied to the machine!
Damage to machine.

▶ Ensure that exclusively authorized qualified personnel preserve the machine.

▶ Ensure that inspection and reapplication intervals are not exceeded.

Maintaining preservation of the machine

Climatic zones

The maintenance intervals required depend on the climatic conditions in the region where the machine is used.

The graphics below show the climatic zones. The dark markings show the regions with the climatic zone in question:

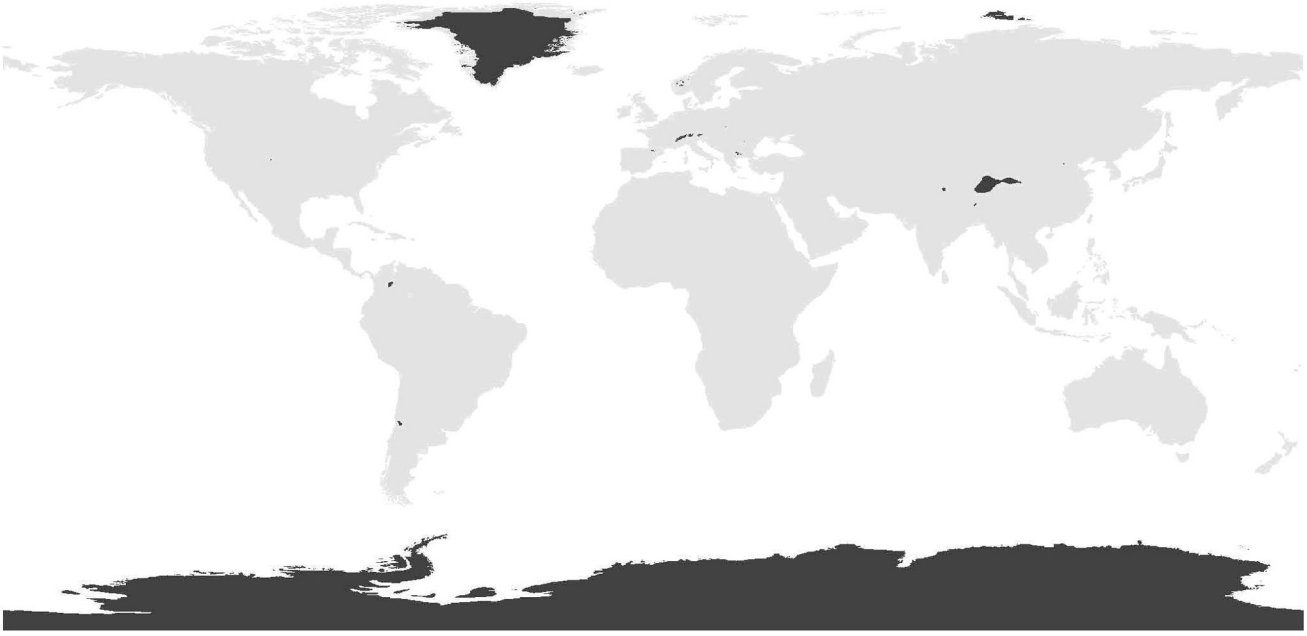

Fig. 5873: Arctic climate

LWN/LR.x/V03.01//Auslieferung/2015-06-03/en

copyright by
LIEBHERR

Fig. 5874: Polar climate

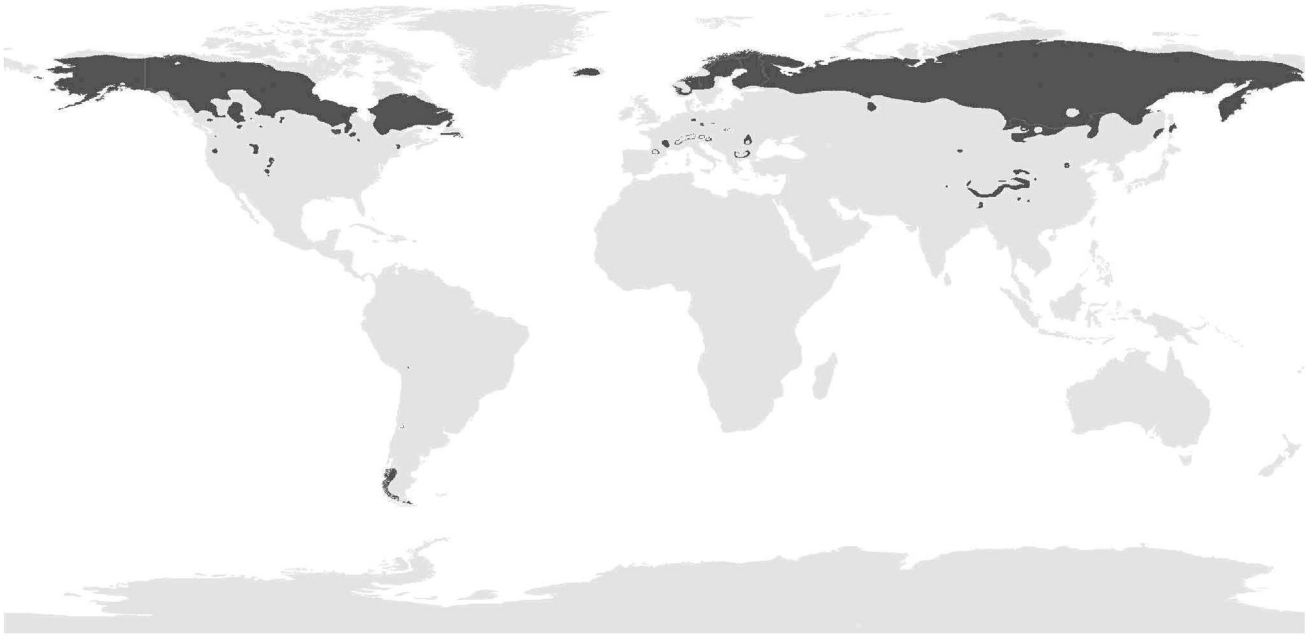

Fig. 5875: Boreal climate

LWN/LR.x/V03.01//Auslieferung/2015-06-03/en

copyright by
LIEBHERR

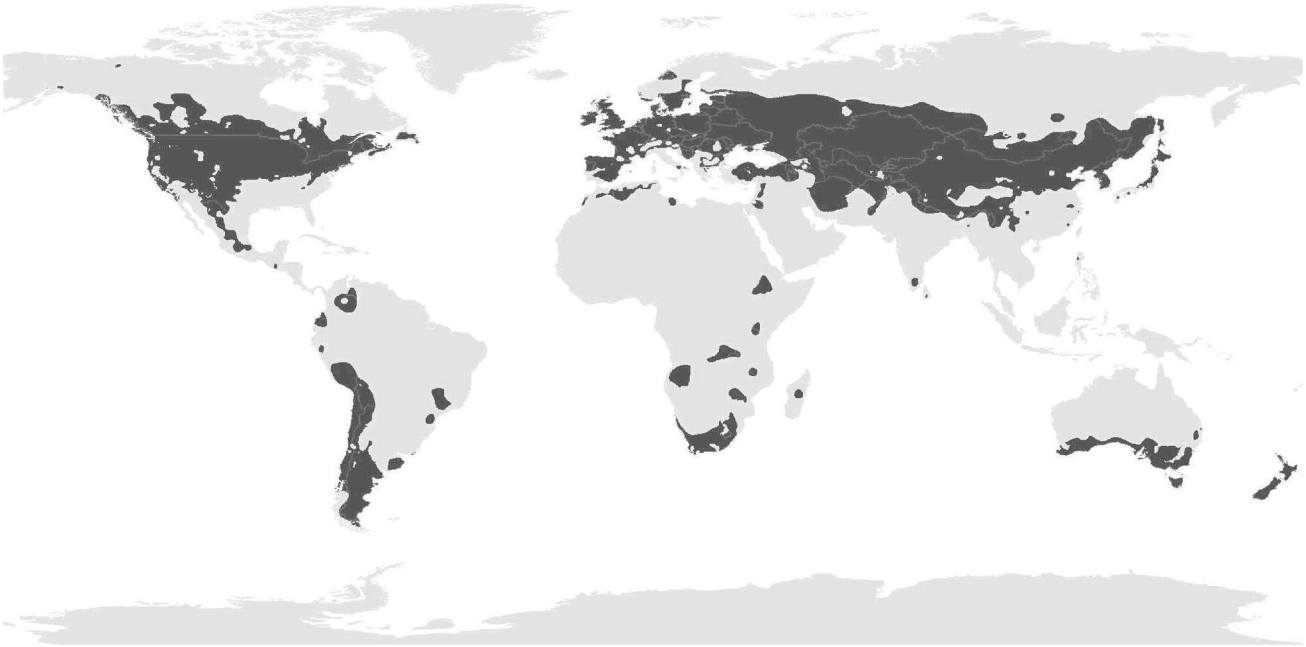

Fig. 5876: Warm temperate climate

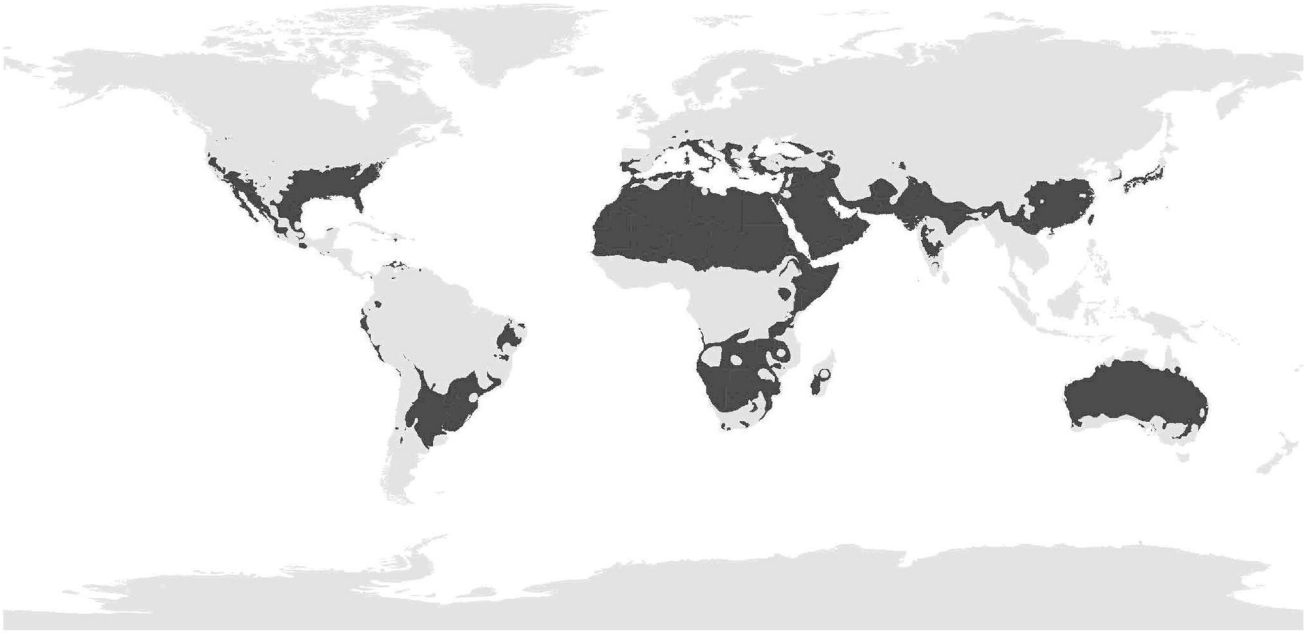

Fig. 5877: Subtropical climate

LWN/LR.x/V03.01//Auslieferung/2015-06-03/en

copyright by
LIEBHERR

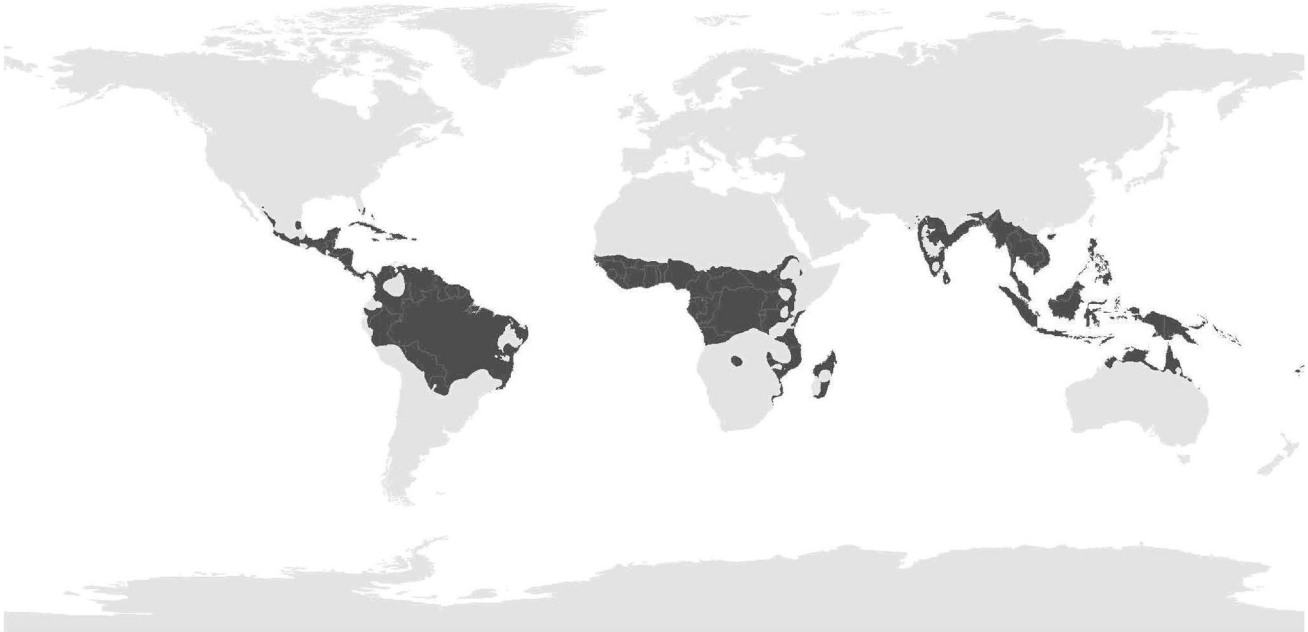

Fig. 5878: Tropical climate

Additional sub-division within climatic zones

The climatic zones are further sub-divided:

Sub-division 1
- Small fluctuations within the climatic zone
- Constant temperature
- Constant, low humidity
- High winds rare

Sub-division 2
- Moderate fluctuations within the climatic zone
- Moderate temperature differences
- Moderate humidity
- Moderate fluctuations in humidity
- Occasional high winds

Sub-division 3
- Strong fluctuations within the climatic zone
- Strong temperature differences
- Strong fluctuations in humidity
- Frequently high constant humidity
- Extreme wind speeds
- Highly contaminated wind (saline, aggressive media - chemicals, sand)
- Extreme UV radiation

Irrespective of the actual surroundings, sub-division 3 automatically applies to the following machine uses within the relevant climatic zone:
- Bulk handling with aggressive chemicals
- Offshore cranes (drilling platform cranes, ship's cranes, machines on pontoons)

Inspection intervals

The inspection intervals for the anti-corrosion coating are shown in the table below.

Rectify any faults identified by the inspection and repair mechanical damage immediately.

LWN/LR.x/V03.01//Auslieferung/2015-06-03/en

copyright by
LIEBHERR

Anti-corrosion coating inspection intervals in months						
	Arctic climate	Polar climate	Boreal climate	Warm temperate climate	Subtropical climate	Tropical climate
Interval	6	6	9	12	9	6

Tab. 605: Anti-corrosion coating inspection intervals in months

Reapplication intervals

Assuming there is no visible damage to the protective film, the table below shows the reapplication intervals (in months) for the anti-corrosion coating.

Anti-corrosion coating reapplication intervals in months																		
	Arctic climate			Polar climate			Boreal climate			Warm temperate climate			Subtropical climate			Tropical climate		
Sub-division	1	2	3	1	2	3	1	2	3	1	2	3	1	2	3	1	2	3
Interval	-	4	2	-	4	2	9	6	3	18	12	6	6	4	2	-	4	2

Tab. 606: Anti-corrosion coating reapplication intervals in months

Ensure that the following conditions are fulfilled:
- ❑ Suitable preservation agents are available in sufficient quantities (For more information see: 9.2.9 Preservation medium (anti-corrosion coating), page 1807) .
- ❑ The appropriate tools and accessories are available.
- ❑ The machine is switched off and secured to prevent unauthorised operation.
- ❑ The machine has cooled down.
- ❑ The battery main switch is switched off.
- ❑ Protective equipment is worn.

▶ Thoroughly clean the machine using a high-pressure cleaner.

▶ Dry if necessary with dry, oil-free air.

▶ Remove any areas of corrosion with sandpaper (60 – 80 grit) or a wheel sander.

▶ Be careful not to cause damage through mechanical removal of corrosion.

▶ Do not polish surfaces.

WARNING
Insufficient or incorrect preservation agents are applied to the machine!
Risk of injury to the respiratory tract, suffocation.

▶ Wear breath protection.

▶ Spray all machined, but unpainted, parts external to the machine (e.g. pins that are not removed, bearings, galvanized brackets, screws, etc.) with DINITROL 4010 or LPS 3 anti-corrosion agent.

▶ Spray all machined, galvanized, but unpainted, parts within the machine (e.g. flanges, pins, screws, joints, casings, contact surfaces) with anti-corrosion coating agent DINITROL 4010 or LPS 3.

LWN/LR.x/V03.01//Auslieferung/2015-06-03/en

copyright by LIEBHERR

- ▶ Spray the entire engine compartment with DINITROL 3650 anti-corrosion coating agent.
- ▶ Allow a drying time of 24 hours then spray the entire engine compartment with DINITROL 4010 anti-corrosion coating agent.
- ▶ Spray electrical components inside switch cabinets and terminal boxes as well as plug-in connections and limit switches with LPS 1 anti-corrosion coating agent.
- ▶ Spray screws on railings, boom walkways, steps, moving parts and floodlights with LPS 3 anti-corrosion coating agent.
- ▶ Wrap connections, threaded joints, valves of the hydraulic system with DENSO tape.
- ▶ Spray all joints (pin connections on pendant and backstay straps, equalizer, etc.) with LPS 3 anti-corrosion coating agent.
- ▶ Do not use LPS 3 anti-corrosion coating agent in the engine compartment.

Preserving the machine for storage for up to 7 months

NOTICE
Do not use a preserved machine if it has been preserved for storage for up to/more than 7 months!
Damage to machine.

- ▶ Ensure that the machine is treated with permitted lubricants.
- ▶ Ensure that all oil levels are correct.

Ensure that the following conditions are fulfilled:
- ❑ The boom is laid down.
- ❑ Rear counterweight has been removed.

Preserving the machine for indoor storage

The machine is stored in a hall or shelter and is not directly exposed to environmental influences.

Preserving the ropes

Preserve the following ropes:
- – Winch1 rope
- – Winch 2 rope
- – Rope of the main boom luffing winch
- – Rope of the jib luffing winch
- – Rope of the rope reeving winch

- ▶ Unwind ropes on first layer.
- ▶ Preserve ropes with rope grease.
- ▶ Wind up ropes correctly.

Preserving the boom

Boom intermediate pieces:

- ▶ Dismantle the boom sections.
- ▶ Repair any damage.

LWN/LR.x/V03.01//Auslieferung/2015-06-03/en

copyright by
LIEBHERR

- ▶ Dismantle pin connection points.
- ▶ Grease pin connection points.
- ▶ Assemble pin connection points.
- ▶ Preserve all machined but unpainted parts on the boom sections with DINITROL 4010.

Boom base section/boom heads:

- ▶ Repair any damage.
- ▶ Dismantle pin connection points.
- ▶ Grease pin connection points.
- ▶ Assemble pin connection points.
- ▶ Preserve all machined but unpainted parts on the boom base sections/boom heads with DINITROL 4010.
- ▶ Retract hydraulic cylinders.
- ▶ Wrap jib tilting-back support cylinder with DENSO tape.

Pendant straps and backstay straps:

- ▶ Dismantle pin connections.
- ▶ Grease pin connections.
- ▶ Assemble pin connections.

Preserving the basic machine

A-frame 1 equalizer:

- ▶ Dismantle pin connections.
- ▶ Grease pin connections.
- ▶ Assemble pin connections.

Rear counterweight:

- ▶ Dismantle pin connections.
- ▶ Grease pin connections.
- ▶ Assemble pin connections.

Steel fabrication:

- ▶ Check the steel fabrication for damage. The drawings for checking the weld seams and holes can be found in the Technical information volume.
- ▶ Pre-preserve steel fabrication with DINITROL 3650.
- ▶ Post-preserve steel fabrication with DINITROL 4010.
- ▶ Lubricate lubrication points.

Hydraulic cylinders:

- ▶ Retract hydraulic cylinders.
- ▶ Wrap hydraulic cylinders that cannot be retracted with DENSO tape.

Swing ring:

- ▶ Apply graphite spray to tooth flanks.
- ▶ Lubricate swing ring until grease escapes from the sealing lips. This process step can also take place with the optional central lubrication.

LWN/LR.x/V03.01//Auslieferung/2015-06-03/en

copyright by
LIEBHERR

Batteries:

- ▶ Disconnect batteries with main battery switch.
- ▶ Remove batteries.
- ▶ Charge batteries every two months (trickle charge).

Winches:

- ▶ Lubricating winches.
- ▶ Fill winch gearbox with oil.

Crawler drive:

- ▶ Lubricate crawler drive.
- ▶ Fill crawler drive with oil.

Swing gear:

- ▶ Fill swing gear with oil.

Fuel tank:

- ▶ Fill fuel tank with winter diesel.
- ▶ Drain water in the condensation trap.

Electrics:

- ▶ Apply Vaseline to all contacts on plug-in connections.

Load hook/pulley block:

- ▶ Lubricate load hook/pulley block.

Hydraulic oil tank:

- ▶ Fill hydraulic oil tank with oil.

LWN/LR.x/V03.01//Auslieferung/2015-06-03/en

copyright by
LIEBHERR

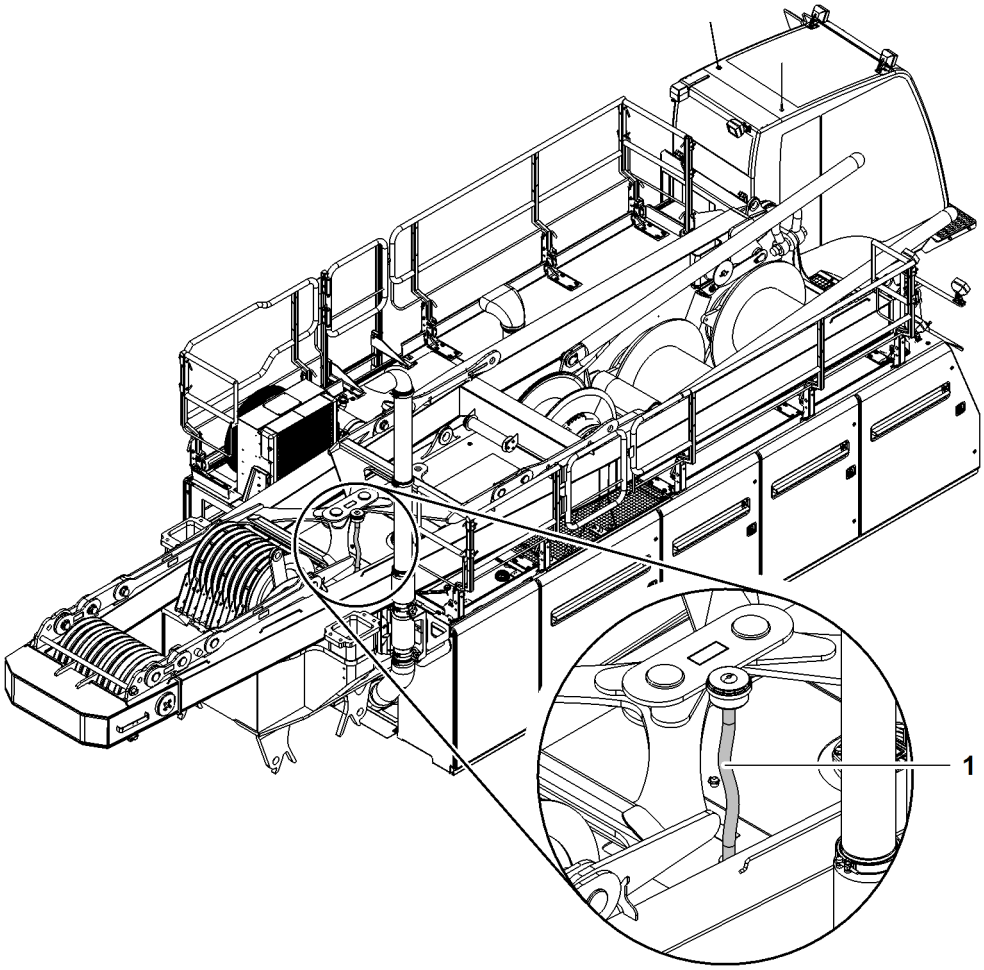

Fig. 5879: Hose on hydraulic oil tank (illustration of principle)

1 Hose with screw fittings

Because it can expand, the hose **1** prevents oil from escaping when temperature differences occur.

▶ Unscrew the venting filter.

▶ Screw on hose **1** with threaded joint.

▶ Screw venting valve onto hose **1**.

▶ Fix hose **1** with venting valve in a vertical position using cable ties.

▶ Ensure that the connections are properly sealed.

Preserve machine for outdoor storage

The machine is stored outdoors and is directly exposed to environmental influences.

Preserving the ropes

Preserve the following ropes:
– Winch1 rope
– Winch 2 rope
– Rope of the main boom luffing winch
– Rope of the jib luffing winch
– Rope of the rope reeving winch

LWN/LR.x/V03.01//Auslieferung/2015-06-03/en

copyright by
LIEBHERR

- ▶ Unwind ropes on first layer.
- ▶ Preserve ropes with rope grease.
- ▶ Wind up ropes correctly.

Preserving the boom

Boom intermediate pieces:

- ▶ Dismantle the boom sections.
- ▶ Remove cat walks.
- ▶ Repair any damage.
- ▶ Dismantle pin connection points.
- ▶ Grease pin connection points.
- ▶ Assemble pin connection points.
- ▶ Preserve boom sections with DINITROL 4010.

Boom base section/boom heads:

- ▶ Remove cat walks.
- ▶ Cover pulleys.
- ▶ Repair any damage.
- ▶ Dismantle pin connection points.
- ▶ Grease pin connection points.
- ▶ Assemble pin connection points.
- ▶ Preserve boom base sections/boom head with DINITROL 4010.
- ▶ Retract hydraulic cylinders.
- ▶ Wrap jib tilting-back support cylinder with DENSO tape.

Pendant straps and backstay straps:

- ▶ Dismantle pin connections.
- ▶ Grease pin connections.
- ▶ Assemble pin connections.

Preserving the basic machine

A-frame 1 equalizer:

- ▶ Dismantle pin connections.
- ▶ Grease pin connections.
- ▶ Assemble pin connections.

Rear counterweight:

- ▶ Dismantle pin connections.
- ▶ Grease pin connections.
- ▶ Assemble pin connections.

Steel fabrication:

- ▶ Check the steel fabrication for damage. The drawings for checking the weld seams and holes can be found in the Technical information volume.

LWN/LR.x/V03.01//Auslieferung/2015-06-03/en

copyright by
LIEBHERR

- ▶ Pre-preserve steel fabrication with DINITROL 3650.
- ▶ Post-preserve steel fabrication with DINITROL 4010.
- ▶ Lubricate lubrication points.

Hydraulic cylinders:

- ▶ Retract hydraulic cylinders.
- ▶ Wrap hydraulic cylinders that cannot be retracted with DENSO tape.

Swing ring:

- ▶ Apply graphite spray to tooth flanks.
- ▶ Lubricate swing ring until grease escapes from the sealing lips. This process step can also take place with the optional central lubrication.

Batteries:

- ▶ Disconnect batteries with battery master switch.
- ▶ Remove batteries.
- ▶ Charge batteries every two months (trickle charge).

Winches:

- ▶ Lubricating winches.
- ▶ Fill winch gearbox with oil.

Crawler drive:

- ▶ Lubricate crawler drive.
- ▶ Fill crawler drive with oil.

Swing gear:

- ▶ Fill swing gear with oil.

Fuel tank:

- ▶ Fill fuel tank with winter diesel.
- ▶ Drain water in the condensation trap.

Electrics:

- ▶ Apply Vaseline to all contacts on plug-in connections.

Load hook/pulley block:

- ▶ Lubricate load hook/pulley block.

Hydraulic oil tank:

- ▶ Fill hydraulic oil tank with oil.
- ▶ Cover pulleys.

LWN/LR.x/V03.01//Auslieferung/2015-06-03/en

copyright by
LIEBHERR

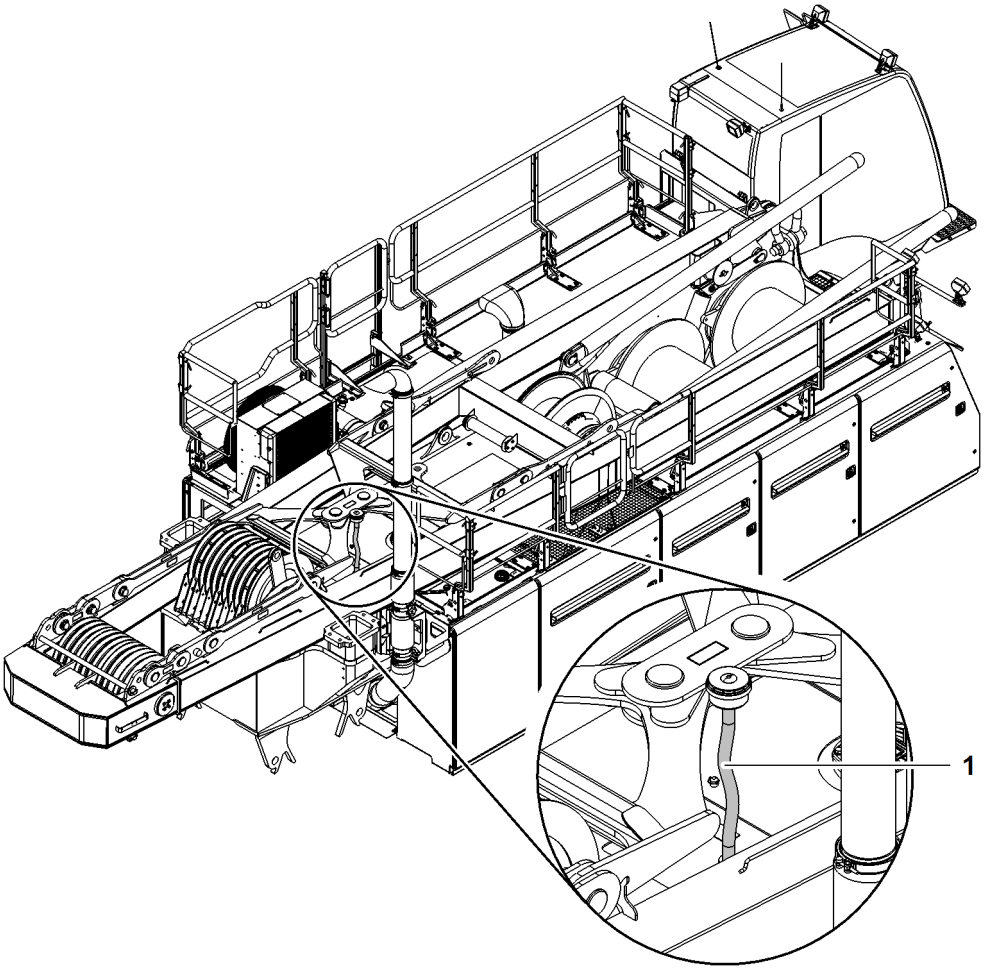

Fig. 5880: Hose on hydraulic oil tank (illustration of principle)

1 Hose with screw fittings

Because it can expand, the hose **1** prevents oil from escaping when temperature differences occur.

- ▶ Unscrew the venting filter.
- ▶ Screw on hose **1** with threaded joint.
- ▶ Screw venting valve onto hose **1**.
- ▶ Fix hose **1** with venting valve in a vertical position using cable ties.
- ▶ Ensure that the connections are properly sealed.

Preserve machine for storage for more than 7 months

Note

- ▶ Contact Liebherr after sales service when storing the machine for more than 7 months.

Preserve machine for decommissioning

Note

- ▶ When decommissioning the machine, contact Liebherr after sales service.

LWN/LR.x/V03.01//Auslieferung/2015-06-03/en

copyright by
LIEBHERR

Preserve machine for reselling

Note

▶ When reseling the machine, contact Liebherr after sales service.

LWN/LR.x/V03.01//Auslieferung/2015-06-03/en

copyright by
LIEBHERR

LWN/LR.x/V03.01//Auslieferung/2015-06-03/en

copyright by
LIEBHERR

Index

0

0906 fixed jib 280

1

1008 fixed jib 268
1008.17 jib section 3 m (10 ft) 270
1008.17 jib section 6 m (20 ft) 271
1008.20 jib head section 272
1507 fixed jib 261
1713 fixed jib 246
1713.18 jib section 12 m (40 ft) 251
1713.18 jib section 3 m (10 ft) 248
1713.18 jib section 6 m (20 ft) 249
1713.21 jib head section 252
1916 luffing jib 325
1916.18 jib section 12 m (40 ft) 330
1916.18 jib section 3 m (10 ft) 327
1916.18 jib section 6 m (20 ft) 328
1916.21 jib head section 332
1916.32 Midfall 368

2

2316 luffing jib 286
2316.20 jib head section 293
2316.20 jib section 12 m (40 ft) 291
2316.20 jib section 3 m (10 ft) 288
2316.20 jib section 6 m (20 ft) 289
2316.25 Midfall 363
2821 main boom 160
2821 main boom head to 2220 derrick boom head pendant straps 1317, 1320
2821/2316 reducing piece 218
2821/2316.24 reducing piece 12 m (40 ft) 218

4

4-strand round sling gear 1102
4-strand round sling rigging with chain shortening devices 1101

A

A/C compressor on diesel engine 458
Abseil rescue equipment* 420, 1007
Access systems and railings 1792, 1880
Accumulator 1791
Activate winch synchronization on control lever 960
Activates/deactivates continuous mode of the windscreen wiper. 842
Activates/deactivates interval mode of the windscreen wiper 842
Activating auxiliary heating* 1982
Activating the air conditioning system 1980
Activating the external air conditioning system* 1981
Activating the radio remote control 975
Activating the radius adjustment of the counterweight carriage 949
Activating the winch synchronization on control panel X23 961
Activating winch synchronization 960
Activating/deactivating assembly functions on or off 868
Activating/deactivating the lifting height limitation 994
Activating/deactivating the maximum radius radius limitation 991
Activating/deactivating the minimum radius radius limitation 990
Activating/deactivating the radius limitation 990
Activating/deactivating the slewing range limitation 992
Adapter connecting link 388
Additional cab equipment 860
Additional connecting elements/spacer brackets for fixed jib 1507 265
Additional floodlights* 815
Additional pendant straps/connecting links for luffing jib 1916 349
Additional pendant straps/connecting links/tension load cells 197, 214
Additional sub-division within climatic zones 1990
Adjustable floodlights on main boom base section 533
Adjusting and mounting the transport brackets for steel pendant straps 1775
Adjusting and mounting transport brackets for connecting links 1777
Adjusting the cabin 865
Adjusting the control stand horizontally 832
Adjusting the dampening 837
Adjusting the ergonomics* 837
Adjusting the lamella vents 847
Adjusting the operator's seat 821, 832
Adjusting the RPM of the diesel engine 824
Adjusting the RPM of the diesel engine with the control lever 824
Adjusting the RPM of the diesel engine with the foot pedal 826
Adjusting the support height of jacks 1169, 1189
Adjusting the track 1700
A-frame1 74, 1902
A-frame1 equalizer 75, 76
A-frame1 to 2220 derrick boom head pendant straps 1316, 1320

LWN/LR.x/V03.01//Auslieferung/2015-06-03/en

copyright by LIEBHERR

A-frame3 equalizer (jib pendant strap) 306, 315, 344, 352
Aggregate screen 705
Air conditioning system 456
Air filter system 1787, 1813
Align wheel sets 1429
Aligning the wheeled counterweight carriage 1426
Ambient temperatures 58
Angle 519
Angle of view on the side 507
Angle of view rear 508
Application conditions 58
Application height 58
Application on floating devices 595
Appropriate use 51
Areas of responsibility 543
Armrests* for operator's seat 424
Assemble the luffing jib 1609
Assembling the basic machine 1116
Assembling the fixed jib 1528
Assembling the ladder* for the boom 1251, 1358
Assembling the luffing jib + Midfall 1694
Assembling the main boom 1356
Assembling the main boom + reducing piece 1467
Assembly and dismantling 1107
Assembly cylinder * 968
Assembly of counterweight carriage of derrick equipment* 1420
Assembly of derrick boom 1337
Assembly of main boom with derrick equipment* 1337
Assembly of main boom without derrick equipment* 1250
Assembly of suspended counterweight of derrick equipment* 1418
Assembly site 1045
Assigned functions for buttons on left-hand multi-directional joystick 623
Assigned functions for movement directions on left-hand multi-directional joystick 620, 625
Assigned functions for movement directions on right-hand double T-lever 649
Assigned functions for movement directions on right-hand multi-directional joystick 642
Attach auxiliary ropes and guide counterweight carriage pendant straps 1433
Attach the carbody counterweight 1208
Attach the telescopic unit 1420
Attaching carbody counterweight for undercarriage with fixed track width 1208
Attaching carbody counterweight for undercarriage* with adjustable track width 1211
Attaching connecting links to the boom head section 1534
Attaching crawler side frame for undercarriage with fixed track width 1175
Attaching crawler side frame for undercarriage* with adjustable track width 1191
Attaching the auxiliary jib (15 t (33.000 lb)) to the jib head section 1610
Attaching the auxiliary jib (30 t (66.000 lb)) to the jib head section 1612
Attaching the auxiliary jib (36 t (79300 lb)) to the boom head section 1275, 1393
Attaching the boom base section to the uppercarriage 1264, 1386
Attaching the crawler side frame 1174
Attaching the jib base section 1530, 1615
Attaching the main boom (self-assembly system) 1536, 1618
Attaching the rope fixing point 1296, 1407, 1555, 1649
Auxiliary air heating* 464
Auxiliary floodlights* 529
Auxiliary heating altitude kit* 466
Auxiliary heating control unit 466
Auxiliary heating* 856
*Auxiliary heating** control unit 810
Auxiliary jib (15 t (33.000 lb)) on jib head 408
Auxiliary jib (36 t (79.300 lb)) on main boom head 408
Auxiliary jib* (15 t (33.000 lb)) 377
Auxiliary jib* (30 t (66.000 lb)) 375
Auxiliary jib* (36 t (79.300 lb)) 372
Auxiliary water heating* 461

B

Backstay shackles 234
Backstay straps A-frame2 to main boom head 2821 1485
Backstay straps connecting element on fixed jib 1507 265
Backstay straps spacer brackets on fixed jib 1507 266
Banksman 544, 546
Barrier rod 502
Basic counterweight slab 14 t (30,864 lb) 152
Basic machine 66
Basic machine overview 66
Basic machine with undercarriage with fixed track width 66
Basic machine with undercarriage* with adjustable track width 70
Batteries 1791, 1860
battery charger 973
Battery heating* 464
Blocked crawlers* 964
Bolt the derrick pulley block with main boom pendant straps 1393
Bolting the boom base section to the main boom 1273
Bolting the boom head section to the boom sections 1253
Bolting the derrick boom 1338
Bolting the equaliser on A-frame 2 to the jib backstay straps 1623

LWN/LR.x/V03.01//Auslieferung/2015-06-03/en

copyright by LIEBHERR

Bolting the equaliser on A-frame 3 to the jib pendant straps 1627
Bolting the equalizer on A-frame 1 to the main boom pendant straps 1275
Bolting the jib base section to the jib 1626
Bolting the jib head section to the jib sections 1529, 1614
Bolting the pendant ropes for the suspended counterweight 1343
Bolting the pendant straps for the wheeled counterweight carriage 1343
Boom base section or A-frame 1: checking the operation of the mechanical boom angle indicator 1890
Boom base section: checking that the knuckle pins and locking elements fit tightly 1889
Boom base section: lubricating knuckle pins 1889
Boom configuration 4 - load position 1 882
Boom configuration 4 - load position 2 883
Boom configuration 5 - load position 1 884
Boom configuration 5 - load position 3 885
Boom configuration 6 - load position 2 886
Boom configuration 8 - load position 1 887
Boom configuration 8 - load position 2 888
Boom configuration 9 - load position 1 889
Boom configuration 9 - load position 2 890
Boom luffing winches 1789, 1826
Bottom backstay shackle 235
Bracket KnK1 105
Bracket support K1 130
Bracket support K2 131
Bracket support K3 132
Bracket1 104
Bracket2 107
Bracket3 108
Bracket4 109
Bracket5 110
Bracket6 111
Brackets for front cover 502
Brief summary 1722, 1733, 1735, 1736, 1739
Burns 576
Buttons 679
Buttons on the side 793
Bypass filter system 1791, 1857
By-pass flow filter system* 482
Bypass unused hoist limit switches. 1305, 1416, 1563, 1657

C

Cab 1795, 1965
Cab roof protection guard* 431
Cab tilting device* 864
Cabin 80, 617, 815
Cabin overview 504
Cabin railing* 451
Cable remote control 453, 784
Cable remote control on undercarriage* 784
Cable remote control on uppercarriage 784
Calculating load charts 881
Calculating load charts online 881
Calculating the length of winch1/winch2 rope 1049
Calculating the revised set-up 871
Calibrating the rope measuring system 980
Call up the *Setup* screen 870
Calling up time and day 857
Camera 511
Camera cable in main boom base section 520
Cancelling the stop after crawler operation 995
Carbody counterweight 146
Carbody counterweight for undercarriage with fixed track width 146
Carbody counterweight for undercarriage* with adjustable track width 148
Carbody counterweight slab 13.4 t (29,542 lb)* 147
Carbody counterweight slab 14.3 t (31,526 lb) 146
Carbody counterweight slab 18.8 t (41,446 lb) 149
Carbody counterweight slab 7.5 t (16,534 lb) 150
Carbon-fibre pendant straps 1794, 1909
Carrying out a hydraulic oil analysis 1848
Catwalk grating 88
Central lubrication system 528
Central lubrication* 814, 867
Central power unit 81
CF pendant straps on A-frame1 76
CF pendant straps on A-frame2 313, 350
CF pendant straps on A-frame3 315, 352
CF pendant straps on fixed jib 0906 284
CF pendant straps on fixed jib 1008 279
CF pendant straps on fixed jib 1507 267
CF pendant straps on fixed jib 1713 260
CF pendant straps on jib base section 2316.22 312
CF pendant straps on jib head 1916.21 359
CF pendant straps on jib head 2316.20 322
CF pendant straps on jib section 1916.18 12 m (40 ft) 358
CF pendant straps on jib section 1916.18 3 m (10 ft) 354
CF pendant straps on jib section 1916.18 6 m (20 ft) 356
CF pendant straps on jib section 2316.20 12 m (40 ft) 320
CF pendant straps on jib section 2316.20 3 m (10 ft) 317
CF pendant straps on jib section 2316.20 6 m (20 ft) 319
CF pendant straps on luffing jib 1916 350
CF pendant straps on luffing jib 2316 312
CF pendant straps on main boom 2821 198
CF pendant straps on main boom base section 2821.30 198
CF pendant straps on main boom head 2821.24 212
CF pendant straps on main boom section 2316.25 1 m (3 ft) 243
CF pendant straps on main boom section 2821.30 12 m (40 ft) 208

LWN/LR.x/V03.01//Auslieferung/2015-06-03/en

copyright by LIEBHERR

CF pendant straps on main boom section 2821.30 3 m (10 ft) 201
CF pendant straps on main boom section 2821.30 6 m (20 ft) 204
CF pendant straps on midfall 1916.32 371
CF pendant straps on midfall 2316.25 366
CF pendant straps on reducing adapter 2821/2316 242
CF pendant straps on reducing adapter 2821/2316.24 12 m (40 ft) 242
Changing the bulbs of floodlights on main boom base section 1866
Changing the bulbs of floodlights on the cabin and on the uppercarriage 1862
Changing the bulbs of search floodlights 1865
Changing the cab lamp light bulb 1862
Changing the filter elements 1857
Changing the windscreen wipers 1965
Charger 435, 437
Charging the rechargeable battery with a battery charger 973
Check all pulleys for ease of movement 1957
Check all steel pulleys for wear 1957
Check cabin roof protection guard for damage, locking (in case of foldable design) 1965
Check derrick boom base section, derrick boom head and derrick boom sections for damage and wear (cracks, notches, corrosion, plastic deformation, wear) 1920
Check fill level of the lubrication pump 1918
Check gearbox and hydraulic connections for leaks 1834
Check main boom base section, main boom head and main boom sections for damage and wear (cracks, notches, corrosion, plastic deformation, wear) 1888
Check obstacle warning light for function and damage, check mains cable and plug (if available) for damage 1876
Check pendant ropes and pins for damage and wear and check that locking springs and cotter pins are present (cracks, notches, corrosion, plastic deformation, wear, lubrication, etc.) 1914
Check ropes for abrasion 1935
Check ropes for corrosion 1933
Check ropes for the effects of heat 1935
Check ropes for wear, tight fit and lubrication 1930
Check screw connections and pin connections for tight fit 1891, 1892, 1901
Check that the hydraulic cylinder fits properly and does not leak 1855
Check that the safety catch is present and working properly 1846
Check the hydraulic system for leaks 1847
Check the rope for diameter shrinkage 1930
Check the rope for number of permitted wire breaks 1936
Check the round steel chains for wear and damage 1844
Check the windows of the cab for damage 1965
Check transport lashing and round slings for wear (according to EN 1492-2). 1844
Checking A-frame 1 1902
Checking all hooks/pulley blocks for damage, wear, corrosion and widening of the hook aperture 1845
Checking all plastic pulleys for wear 1958
Checking all pulleys for damage 1959
Checking all pulleys for ease of movement, signs of wear and damage 1957
Checking CF pendant straps and pins for damage and wear and check that locking springs and split pins are present 1910
Checking CF pendant straps for wear of the protective coating and/or wire mesh hose and checking for damage to fibers 1910
Checking connecting links for damage and wear 1907, 1913, 1915
Checking counterweight supports (pins, shackles) for damage and wear 1917
Checking emergency descent equipment for presence and function 1968
Checking hoist limit switches, boom limit switches and, if necessary, limit switches of the piling and drilling rig to ensure they are working correctly 1873
Checking hydraulic cabin elevation for function and damage 1968
Checking hydraulic cylinders, hydraulic hoses and connections for leaks and damage 1967
Checking hydraulic hoses and connections for leaks and damage 1968
Checking ladders, steps, platforms, and ascents for wear, damage and anti-slip surfaces 1880
Checking latches and hand rails for wear and damage 1880
Checking locking elements for availability, damage, wear and tight fit 1917
Checking locking elements for damage and wear 1912, 1914
Checking locking flaps for ease of movement 1899
Checking locking screws of the track pads axes 1843
Checking outside mirrors and inside mirrors for damage 1967
Checking pendant ropes for damage and wear 1914
Checking personal protective gear 1878
Checking pins for damage and wear 1912, 1914
Checking pins for presence of locking elements 1969
Checking rope end attachment for tight fit when starting up rope reeving winch 1829
Checking rope fixing points for tears 1891, 1892
Checking rope suspensions (rope clamps, rope thimbles) for wire breaks, absence of corrosion and tight fit of screw fittings 1961
Checking rope thimbles for corrosion, cracks and wire breaks 1962
Checking ropes for lubrication 1930

LWN/LR.x/V03.01/Auslieferung/2015-06-03/en

copyright by LIEBHERR

Checking steel pendant straps and pins for damage and wear and check that locking springs and split pins are present 1906
Checking steel pendant straps for damage and wear 1906
Checking tension load cells for damage and wear, checking electricity connections for tight fit 1907, 1913
Checking that all required safety labels are mounted on the machine and are legible 1879
Checking that rope protection and locking springs are present and not damaged 1891, 1892, 1901
Checking that the cab door and the door lock work properly 1965
Checking that the cabin lighting, floodlights and auxiliary floodlights are working properly 1862
Checking that the crossbeam set screws on the crawler side frames are secure on telescopic undercarriages 1835
Checking that the mechanical inclinometer is working properly 1874
Checking that the safety chain is present and working properly 1968
Checking the air pressure of the counterweight carriage 1921
Checking the anemometer for tight fit and function 1891, 1900
Checking the auxiliary jib for function and damage 1892
Checking the availability of the spring cotter pin 1884
Checking the battery fluid 1860
Checking the battery main switch 820
Checking the bearing for proper seating and position 1959
Checking the belt drive 1985
Checking the bushes of CF pendant straps 1911
Checking the bypass filter system 1857
Checking the cabin's suspension point for damage 1969
Checking the chain tension 1836
Checking the climate box for contamination 1979
Checking the condenser for contamination 1977
Checking the condenser for loose leads, loos screws and corrosion 1978
Checking the coolant level in the inspection glass 1975
Checking the derrick boom tilting-back supports 1438
Checking the dryer for damage and corrosion 1979
Checking the ease of movement of pin connections in the entire pendant strap strand 1907, 1912
Checking the emergency stop 1875
Checking the eye bolt of the railing stabilization for tight fit 1883
Checking the fan on condenser for function, tight fit and damage 1978
Checking the ferrules for cracks and splitting 1962
Checking the fluid level in the cells 1860
Checking the fresh air filter for contamination 1973
Checking the fuel fill level 822
Checking the function of the central lubrication system 1918
Checking the function of the emergency lowering system 1969
Checking the function of the railing stabilization 1883
Checking the fuses 1040
Checking the gearbox oil level 1816, 1819, 1823, 1826, 1830, 1833
Checking the gearbox oil level in the counterweight carriage's axle gearbox 1924
Checking the hydraulic connections on the counterweight carriage for tightness 1927
Checking the hydraulic cylinders of the counterweight carriage's wheel sets for tightness 1927
Checking the hydraulic hoses 1856
Checking the hydraulic oil tank gate valve 822
Checking the jib base section, jib head and jib sections for damage and wear 1893
Checking the jib limit switch plate for proper adjustment 1666
Checking the locking elements for wear and damage 1906
Checking the lubrication points 1919
Checking the machine steel structure for damage, cracks 1885
Checking the main boom head for function and damage 1891
Checking the main boom limit switch plate for proper adjustment 1311, 1448, 1568
Checking the negative pressure indicator 1813
Checking the oil cooler for contamination 1847
Checking the operation of the acoustic warning signal 1968
Checking the operation of the cab door 1965
Checking the operation of the door lock 1965
Checking the operation of the hydraulic cab tilting device 1967
Checking the operation of the hydraulic cab tilting device and for damage 1967
Checking the operation of the operating elements (valves, displays etc.) 1968
Checking the pins for wear and damage 1906
Checking the pocket locks 1962
Checking the position of the bypass plug 1155
Checking the pressure in the accumulator of the hydraulic tilting-back supports 1618
Checking the pressure in the tilting-back support piston area 1904
Checking the programed setup 872
Checking the rear counterweight, fixing lugs and round steel chains for damage, wear and secure fit 1916
Checking the recirculated air filter for contamination 1971
Checking the rope clamp for tight fit 1964
Checking the rope drive 1955

LWN/LR.x/V03.01//Auslieferung/2015-06-03/en

copyright by
LIEBHERR

Checking the rope end fastening for tight fit 1825, 1828, 1832
Checking the rope end fittings for cracks 1963
Checking the rope fixing point 1964
Checking the rope lock for damage and proper operation 1964
Checking the rope measuring system and height adjustment of all winches (if available) for correct function 1872
Checking the ropes for deformations 1932
Checking the screws of the counterweight tie-down for tight fit 1928
Checking the screws of the rear counterweight tie-down for tight fit (with exception of LR 1001.xx.xx) 1916
Checking the seals and inspection dates on the fire extinguishers 1877
Checking the spring tension of railing doors 1880
Checking the thimble connection 1962
Checking the tilting-back support cylinder 828
Checking the time intervals of the lubrication pump 1919
Checking the tires of the counterweight carriage for damage 1922
Checking the top jib limit switch for function 1664
Checking the urea solution fill level 822
Checking the venting valve 1818
Checking winch drum groove base for wear 1955
Checks before start up 819
Chemical burns 577
Choice of correct winch in derrick operation 1054
Choosing the correct hook or pulley block 1051
Clamping devices 829
Cleaning or replacing the filter insert in the cabin 1969
Cleaning plastic pulleys 1960
Cleaning the air filter dust ejector 1814
Cleaning the crawlers 1834
Cleaning the machine 1986
Cleaning the magnetic rod 1851
Cleaning the magnetic rod in the return filter 1849
Climatic box beneath cabin 458
Climatic zones 1987
Closing the return filter 1851
Composition of main boom in derrick mode with fixed jib 1507 attached 1496
Condenser on uppercarriage door/dryer on condenser 457
Configuration of jib 1484, 1494, 1509, 1519, 1570, 1590, 1668, 1681
Configuration of main boom 1230, 1450, 1484, 1494, 1509, 1519, 1574, 1593, 1671, 1684
Configuration of main boom in derrick mode 1313
Confirming the existing setup 821
Connect A-frame2 with the rope of winch1/ winch2. 1619
Connect hydraulic lines 1717
Connect the electric cables 1281, 1341, 1371, 1540, 1632, 1718
Connecting and checking boom fall arrest* 1256, 1340, 1363
Connecting electric cables to the uppercarriage 1271, 1392
Connecting electric lines and hydraulic lines 1422
Connecting electric lines and hydraulic lines with basic machine 1425
Connecting elements for CF pendant straps 183, 297, 336
Connecting elements for CF pendant straps behind reducing adapter 227
Connecting elements for CF pendant straps in front of reducing adapter 224
Connecting elements for steel pendant straps 182, 296, 335
Connecting elements for steel pendant straps behind reducing adapter 226
Connecting elements for steel pendant straps in front of reducing adapter 223
Connecting hydraulic lines and electric lines with the uppercarriage 1349
Connecting hydraulic lines of crawler 1204
Connecting hydraulic lines to the uppercarriage 1267, 1388
Connecting link 200, 241, 243
Connecting link (conversion kit) 349
Connecting links 215
Connecting links with tension load cell 197, 214
Connecting the equaliser on A-frame 3 to the jib base section 1624
Connecting the hydraulic lines 1341
Connecting the hydraulic lines on the crawlers 1186
Connection interruptions 978
Control and operating elements 613
Control panel X11 671
Control panel X12 673
Control panel X23 675
Control panel X26 and mount 427
Control panel *X26* for counterweight carriage* 678
Control panel zoom camera 512, 812
Control panels 829
Control unit *external air conditioning system* 461
Control unit *external air conditioning system** 808
Converting from medium or narrow track to wide track 1708
Converting from wide track to medium or narrow track 1700
Coolant 1805
Cooling circuit 456
Cooling system (see operation manual of the engine manufacturer on CD) 1788
Counterweight 1794, 1916
Counterweight carriage 398, 401
Counterweight carriage preparation unit* 426
Counterweight carriage* radius adjustment 949
Counterweight frame 394

LWN/LR.x/V03.01/Auslieferung/2015-06-03/en

copyright by LIEBHERR

Counterweight slab 10 t (22,046 lb) 153, 395, 403
Counterweight slab 5 t (11,023 lb) 154, 396, 404
Crawler 62
Crawler side frame 137
Crawler side frame for undercarriage with fixed track width 137
Crawler side frame for undercarriage* with adjustable track width 139
Crawlers 909, 1790, 1833
Cross strap 411

D

Danger zone 548
Deactivate winch synchronization on control lever 963
Deactivating rope reeving winch free-fall 997
Deactivating the radius adjustment of the counterweight carriage 951
Deactivating the winch synchronization on control panel X23 963
Deactivating winch synchronization 963
Decision table 1942
Declaration of conformity 50
Decreasing the pull force of the tagline winch 1001
Decreasing the radius of the counterweight carriage 950
Decreasing the spring tension of the railing door 1882
Deinstalling the luffing jib 1723
Derrick boom 2220 380
Derrick boom base section 2220.24 380
Derrick boom head 2220.22 386
Derrick boom pendant strap (crossbar) 390
Derrick boom pendant strap 12 m (40 ft) 389
Derrick boom section 2220.22 11.7 m (38 ft) 384
Derrick boom section 2220.24 3 m (10 ft) 382
Derrick equipment* 379, 1794, 1920
Derrick hoist cylinder* 952
Derrick preparation unit 432
Derrick rope rigging with crossbar 387
Determining the jack-up height 1161
Determining the support height 1168
Diagonal10 125
Diagonal11 126
Diagonal12 127
Diagonal17 128
Diagonal18 129
Diagonal9 124
Diesel engine 59
Diesel engine (see operation manual of the engine manufacturer on CD) 1787
Diesel engine coolant 1806
Diesel engine coolant heating* 468
Diesel engine lubricating oil 1805
Diesel engine lubrication oil heating* 469
Disassembling main boom + reducing piece 1735
Disassembling the basic machine 1739
Disassembling the luffing jib + Midfall 1722
Disassembling the main boom 1736
Dismantling 1712
Dismantling rope protection pipes 1289, 1400, 1476, 1548, 1641, 1697
Dismantling the fixed jib 1733
Dismantling the rope protection rollers package 1476, 1641
Dismantling the rope protection rollers package on the jib head section 1713 1548
Display area 799
Display section 688
Displaying error messages 854
Displaying or deleting alarm times 859
Displaying or deleting start of heating 858
Distinguishing features main boom sections LR 1300 and LR 1300 SX 157
Distributor gearbox 1788, 1816
Draining the hydraulic oil 1849
Drive unit 460
Driving onto the support plates 965
Driving the transport vehicle out from underneath the machine 1165, 1173

E

Electric components 466
Electrical energy 574
Electromagnetic influence 579
Emergency control system 1792
Emergency operation control* 483, 803, 1019
Emergency stop 1009, 1792, 1875
Emissions 58
Engine oil 1804
Environment 590
Equalizer A-frame2 (jib backstay strap) 253, 262, 273, 281, 305, 313, 343, 350
Equalizer of main boom base section 2821.30 189, 198
Equalizer on A-frame2 (jib pendant strap) 255, 275
Erecting a main boom + fixed jib 1564
Erecting A-frame1 1157
Erecting A-frame2/A-frame3 with rope of winch1/ winch2 and bolting the hydraulic tilting-back supports 1620
Erecting and bolting the mast 1709
Erecting the boom 1055
Erecting the main boom 1307, 1444
Erecting the main boom + luffing jib 1658
Erecting the main boom with derrick equipment* 1437
Erecting the main boom without derrick equipment* 1307
Error displays on monitor 1023
Error messages screen 782
Establishing the connection between the machine and the jib base section 1896
Exchanging the bulbs of floodlights on main boom or jib head 1869
Exchanging the fuses on the battery 1861

LWN/LR.x/V03.01//Auslieferung/2015-06-03/en

copyright by LIEBHERR

Exchanging the hydraulic oil filter elements 1853
Exhaust aftertreatment system (see operation manual of the engine manufacturer on CD) 1788
Explanation of symbols used 1107
Exposure to wind 580
Extend assembly cylinder 968
Extend jacks 1172
Extend the tilting back support cylinders 1157
Extending and pinning the track width adjusting cylinder 1701
Extending the derrick hoist cylinder 953
Extending the jack 1165
Extension device 399
External air conditioning system* 459
External power supply low temperature package* 59
External power supply obstacle warning light 434
External power supply obstacle warning light* 59
External power supply* 434
External supply low temperature package 436

F

Falling object protection* for cabin 491
Filling capacity table 1801
Filling in gearbox oil at the counterweight carriage's axle gearbox 1926
Filling machine with fuel 971
Filling the accumulator 1897
Filling the accumulators for the tilting-back supports on the jib 1893
Filling the fuel tank 971
Filling the windscreen cleaning system 1966
Filling with hydraulic oil 1848
Fire and explosion 577
Fire classes 593
Fire extinguishers 1792, 1877
Fire protection signs 567
Firefighting 593
First response to a current transfer 592
fit the rope guide 1256, 1364
Fitting support pads and chocks 1160
Fitting the anemometer 1284, 1374, 1542, 1635
Fitting the exhaust pipe 1153
Fitting the hoist limit switch to the auxiliary jib 1279, 1397
Fitting the rear counterweight 1216
Fitting the rope protection pipes to the auxiliary jib 1295, 1406
Fitting the second crawler side frame where space is limited 1185
Fitting the wire rope 1961
Fixed jib - overview 245
Fixed jib 0906 1519
Fixed jib 1008 1509
Fixed jib 1507 1494
Fixed jib 1713 1484
Fixed jib head 406
Fixed jib head 0906 and 1507 523
Fixed jib head 1008 522
Fixing rope end 1715
Floodlights on cabin 532
Floodlights on jib head 539
Floodlights on main boom 534
Floodlights on uppercarriage 529
Folding down the link plates for the 11th pulley 1279, 1397
Folding the front feet of the main boom base section upwards 1273
Foot pedal adjuster* 442
Foot pedal* for zoom camera 527
Foot pedals and hand levers 669
Fork 185
Forks 299, 338
Forks behind reducing adapter 230
Forks in front of reducing adapter 229
Frame 85
Free-fall operation* 954
Front and rear platform 142
Front cover 496
Fuel 1806
Fuel pre-filter heating 470
Fuel system (see operation manual of the engine manufacturer on CD) 1787
Fuel tank (see operation manual of the engine manufacturer on CD) 1787
Fuelling up with urea solution 972
Function assignment buttons of right control lever 789
Function assignment for movement directions on left linear control lever 792
Function assignment for movement directions on left multi-directional control lever 629, 636
Function assignment for movement directions on right double T-lever 663
Function assignment movement direction of left control lever 787
Function assignment movement direction of right control lever 790
Function assignment of buttons on left multi-directional control lever 618, 627, 634
Function assignment of buttons on right double T-lever 647, 661
Function assignment of buttons on right multi-directional control lever 640, 654
Function assignment of movement directions on right linear control lever 793
Function assignment of movement directions on right multi-directional control lever 656
Function assignment of the left control lever on machine with derrick equipment* 626
Function assignment of the left control lever on machine without derrick equipment* 618
Function assignment of the right control lever on machine with derrick equipment* 654
Function assignment of the right control lever on machine without derrick equipment* 640
Function lock* 1797

LWN/LR.x/V03.01/Auslieferung/2015-06-03/en

copyright by LIEBHERR

Fuses 1038

G

Gear oil 1804
General 873
General hand signals in accordance with BGV A8 600
Generation A of A-frame3 equalizer (jib pendant strap) 315, 352
Generation A of equalizer for main boom base section 2821.30 199
Generation A of jib backstay strap 12 m (40 ft) 210
Generation A of jib backstay strap 3 m (10 ft) 203
Generation A of jib backstay strap 6 m (20 ft) 207
Generation A of jib pendant strap 12 m (40 ft) 321, 358
Generation A of jib pendant strap 3 m (10 ft) 312, 317, 355
Generation A of jib pendant strap 6 m (20 ft) 319, 356
Generation A of jib pendant strap on jib head 1916.21 360
Generation A of jib pendant strap on jib head 2316.20 323
Generation A of main boom pendant strap 12 m (40 ft) 208
Generation A of main boom pendant strap 3 m (10 ft) 201
Generation A of main boom pendant strap 6 m (20 ft) 205
Generation A of main boom pendant strap on main boom head 2821.24 212
Generation A of reducing adapter pendant strap 12 m (40 ft) 242
Generation B of A-frame3 equalizer (jib pendant strap) 316, 353
Generation B of equalizer for main boom base section 2821.30 199
Generation B of jib backstay strap 12 m (40 ft) 211
Generation B of jib backstay strap 3 m (10 ft) 204
Generation B of jib backstay strap 6 m (20 ft) 207
Generation B of jib pendant strap 12 m (40 ft) 322, 359
Generation B of jib pendant strap 3 m (10 ft) 313, 318, 355
Generation B of jib pendant strap 6 m (20 ft) 320, 357
Generation B of jib pendant strap on jib head 1916.21 361
Generation B of jib pendant strap on jib head 2316.20 324
Generation B of main boom pendant strap 12 m (40 ft) 209
Generation B of main boom pendant strap 3 m (10 ft) 202
Generation B of main boom pendant strap 6 m (20 ft) 206
Generation B of main boom pendant strap on main boom head 2821.24 213
Generation B of reducing adapter pendant strap 12 m (40 ft) 243
Grating A for left platform 101
Grating A for right platform 94
Grating B for left platform 101
Grating B for right platform 95
Grating C for left platform 102
Grating D for left platform 103
Grease 1805
Greasing the bearing of the derrick boom base section 1920
Greasing the extension device of the counterweight carriage (strut, uppercarriage pin connection) 1921
Ground bearing strength 586
Ground pressure display* 982
GSM/GPRS/GPS modem 443, 1792
Guideline values for safe distances from overhead power lines 589

H

Hand signals 599
Hand signals for lifting gear application in accordance with ASME/ANSI B30.5 605
Handrail* / wide steps* 446
HATZ diesel engine* (see operation manual of the engine manufacturer on CD) 1796, 1985
Hazards 573
Heating circuit 461
Higher risk of machine corrosion on floating devices 597
High-pressure sodium vapor lamp 535, 1869
Hook (16 t (35,273 lb)) 418
Hook fixing point * 444
Hook/pulley block 1790, 1845
How to respond in the event of a current transfer 591
How to respond in the event of a fire 592
Hydraulic cab elevation* 449, 805, 1709
Hydraulic cabin elevation* 865
Hydraulic connections and electricity connections for the counterweight carriage 426
Hydraulic connections and electricity connections for the derrick 432
Hydraulic cylinders 1791, 1855
Hydraulic emergency mode* 1013
Hydraulic energy 575
Hydraulic hoses 1791, 1856
Hydraulic oil 1804, 1806
Hydraulic oil filter 1791, 1853
Hydraulic oil heater 1791
Hydraulic oil heater* 470
Hydraulic oil tank 1790, 1848
Hydraulic oil tank heater* 467
Hydraulic system 1790, 1847

I

Identifying faults 1023

LWN/LR.x/V03.01//Auslieferung/2015-06-03/en

copyright by LIEBHERR

Implementation instructions for assembly and disassembly 1109
Implementation instructions for the maintenance 1812
Inappropriate use 54
Inclination display* 983
Increasing the constant pull of the tagline winch 999
Increasing the pull force of the tagline winch 1001
Increasing the radius of the counterweight carriage 950
Increasing the spring tension of the railing door 1881
Information about boom designation 155
Initial filling 1806
Insert catwalk grating in frame 1128
Insert pendant straps in transport bracket and secure 1778
Inspection intervals 1990
Installation of jib luffing winch 1716
Installation of lightning rods on jib head as main boom head 1473
Installation of lightning rods* on main boom head with derrick boom head 1376
Installation position of lightning rods on luffing jib 1637
Installation position of lightning rods with fixed jib 1544
Installation positions of lightning rods on derrick boom head 1353
Installation positions of lightning rods on main boom head 1286
Installing bracket KnK1 1135
Installing bracket1 1134
Installing brackets 1136
Installing grating A and grating B for left platform 1141
Installing mid-point suspension 1259, 1367, 1468, 1627
Installing mid-point suspension (with main boom length 80 m (262 ft), 83 m (272 ft) and 86 m (282 ft) and jib 1507 attached) 1262, 1370
Installing plates and diagonals 1136
Installing platforms at undercarriage with fixed track width 1215
Installing railing connections 1145
Installing railing parts 1139
Installing railing parts on the frame 1125
Installing rope protection pipes 1483, 1555, 1649
Installing second pulley to 3-fold reeve the auxiliary jib (36 t (79300 lb)) 1280, 1398
Installing straps 1144
Installing the cabin railing with platforms on the uppercarriage 1123
Installing the cabin railing without platforms on the uppercarriage 1122
Installing the carbody counterweight slab 14.3 t (31,526 lb) 1209
Installing the connecting elements and spacer brackets on jib backstay straps (jib 1507) 1538
Installing the counterweight carriage on the basic machine 1424
Installing the derrick boom on the uppercarriage 1344
Installing the first crawler side frame 1181, 1198
Installing the frame on the cabin 1124
Installing the grating 1143
Installing the hoist limit switch weight 1301, 1412, 1559, 1653
Installing the midfall 1694
Installing the mid-point suspension 1696
Installing the obstacle warning light 1282, 1372, 1541, 1633
Installing the reducing piece 1467
Installing the rope fixing point 1697
Installing the rope fixing point on the boom head 1299, 1410, 1557, 1651
Installing the rope fixing point on the hook or pulley block 1300, 1411, 1558, 1652
Installing the steps 1211
Installing the strap support 1143
Installing the vandalism protection 1713
Installing transport brackets for CF pendant straps 1776
Interfaces 59
Interim lubrication 867

J

Jib 933, 1793, 1893
Jib 0906.21 280
Jib 1507.20 261
Jib backstay strap 12 m (40 ft) 195, 210
Jib backstay strap 3 m (10 ft) 191, 202
Jib backstay strap 6 m (20 ft) 193, 206
Jib backstay straps A-frame2 to main boom base section 2821 1499, 1575, 1577, 1594, 1596, 1672, 1674, 1685, 1687
Jib backstay straps A-frame2 to main boom head 2821 1510, 1520
Jib base section 1008.20 268
Jib base section 1713.22 246
Jib base section 1916.22 325
Jib base section 2316.22 286
Jib base section: Checking screw connections and pin connections for tight fit, checking that rope protection and locking springs are in place and undamaged 1901
Jib head: Checking wheels for ease of movement 1900
Jib luffing winch 61
Jib luffing winch* 1715
Jib pendant strap (A-frame2 to jib head 0906.21) 283
Jib pendant strap (A-frame2 to jib head 1507) 264
Jib pendant strap 12 m (40 ft) 258, 309, 320, 347, 358
Jib pendant strap 3 m (10 ft) 256, 276, 304, 308, 312, 317, 346, 354

LWN/LR.x/V03.01/Auslieferung/2015-06-03/en

copyright by LIEBHERR

Jib pendant strap 6 m (20 ft) 257, 277, 308, 319, 347, 356
Jib pendant strap on jib head 1008.20 278
Jib pendant strap on jib head 1713.21 259
Jib pendant strap on jib head 1916.21 348, 359
Jib pendant strap on jib head 2316.20 310, 322

K

Keyboard menu 779

L

Ladder* for boom 472
Ladder* for uppercarriage 474
Lash carbody counterweight slab 14.3 t (31,526 lb) 1208
Lashing the jib luffing winch 1715
Laying down the boom 1065
Leak oil return* 471
Leaving the machine in event of current transfer with fire 592
LED floodlight 536, 1865, 1871
LED floodlights 1869
Left control lever 618, 787
Left corner platform 144
Left front cover 500
Left linear control lever 792
Left multi-directional control lever 618, 622, 626, 633
Left platform on uppercarriage 96
Left rear cover 501
Left steel plate 145
Length of midpoint suspension in derrick mode with installed fixed jib 1507 1498
Lengths of jib mid-point suspensions 1572, 1591, 1669, 1682
Lengths of mid-point suspensions 1232, 1315, 1453, 1495
Liebherr oil diagnosis system 1809
Lift jib 934
Lifting and pinning the rear counterweight 1224
Lifting device 1790, 1844
Lifting the empty hook in free-fall operation 958
Lifting the load on winch1 939
Lifting the load on winch2 943
Lifting the main boom 928
Lighting 840, 1791, 1862
Lightning rods* 433
Lightning strike 587
Limit switches 806, 1792, 1873
Linchpin 1111
List of fuses 1038
Litronic control system 477
Litronic testing system 1029
Litronic testing system overview 1029
Load moment limiter (LML) 873, 1792
Load moment limiter self-lock 876
Load moment limiter shut down (ANSI load chart) 879
Load moment limiter shut down (CE load chart) 878
Loading basic machine with crawler side frame 1759
Loading basic machine with crawler side frame and carbody counterweight 1761
Loading basic machine with crawler side frame, carbody counterweight and rear counterweight 1764
Loading basic machine with undercarriage with adjustable track width 1756
Loading basic machine with undercarriage with fixed track width 1743
Loading basic machine without crawler side frame, carbody counterweight and rear counterweight 1756
Loading the basic machine with an assist crane 1743
Loading the basic machine with crawler side frame 1747
Loading the basic machine with crawler side frame and carbody counterweight 1750
Loading the basic machine with crawler side frame, carbody counterweight and rear counterweight 1752
Loading the basic machine without crawler side frame, carbody counterweight and rear counterweight 1743
Locking elements - overview 1110
Locking or unlocking the crawler 918
Locking or unlocking the main boom 932
Locking or unlocking the swing 927
Locking or unlocking winch1/winch2 947
Locking washers 1115
Long work interruption 1011
Loosening strut mountings 1192, 1702
Low temperature function lock* 470
Lower jib 936
Lowering the empty hook in free-fall operation 958
Lowering the jib until wheels touch the ground or bottom jib limit switch is triggered 1726
Lowering the jib up to load moment limiter stop 1725
Lowering the load on winch1 941
Lowering the load on winch2 945
Lowering the main boom 930
Lowering the main boom and jib all the way to the ground 1728
Lowering the safety lever 828
Lubricants and consumables 60, 1798
Lubricating bearings and axels 1845
Lubricating external teeth 1821
Lubricating the axes and swing arms of the counterweight carriage's wheel sets 1922
Lubricating the bearing races via the central lubrication point 1821
Lubricating the bearings on A-frame 1 1902
Lubricating the bearings on the A-frame1 cylinder 1903
Lubricating the counter bearing 1824, 1827, 1829
Lubricating the drive units of the counterweight carriage's wheel sets 1923
Lubricating the pulley bearings 1959
Lubricating the rope bracket on the boom base section and checking pulleys for damage 1831
Lubrication chart 1802

LWN/LR.x/V03.01//Auslieferung/2015-06-03/en

copyright by LIEBHERR

Lubrication diagram 1799
Lubrication system 1794, 1918
Luffing jib - overview 285
Luffing jib 1916 1590
Luffing jib 1916 + midfall 1916 1681
Luffing jib 2316 1570
Luffing jib 2316 + midfall 2316 1668
Luffing jib head 407
Luffing jib luffing winch as auxiliary winch* 481, 1004
Luffing ropes 1946

M

Machine 56
Machine care 1797, 1986
Machine operator 544, 545
Machine overview 56, 505
Machine with derrick equipment* 57
Machine with self-assembly system 1048
Machine without derrick equipment* 56
Machine without self-assembly system 1048
Main boom 894, 897, 903, 906, 928, 1793, 1888
Main boom - overview 159
Main boom + fixed jib 895, 899, 904, 907
Main boom + luffing jib 895, 900, 904, 907
Main boom + luffing jib + Midfall 896, 902
Main boom + reducing piece 895, 899, 903, 907
Main boom 2821 1230
Main boom 2821 + derrick boom 2220 1313
Main boom 2821 + reducing adapter 2821/2316 1450
Main boom adjusting winch emergency mode 1015
Main boom base section 2821.30 160
Main boom head 405
Main boom head section 2821.24 174
Main boom luffing winch 61
Main boom pendant strap 12 m (40 ft) 194, 208
Main boom pendant strap 3 m (10 ft) 190, 201
Main boom pendant strap 6 m (20 ft) 192, 204
Main boom pendant strap on main boom head 2821.24 195, 212
Main boom section 2316.25 1 m (3 ft) 220
Main boom section 2821 12 m (40 ft) 170
Main boom section 2821 3 m (10 ft) 162
Main boom section 2821 6 m (20 ft) 166
Main boom section 2821.24 12 m (40 ft) for LR 1300 172
Main boom section 2821.24 3 m (10 ft) for LR 1300 164
Main boom section 2821.24 6 m (20 ft) for LR 1300 168
Main boom section 2821.30 12 m (40 ft) for LR 1300 SX 170
Main boom section 2821.30 3 m (10 ft) for LR 1300 SX 162
Main boom section 2821.30 6 m (20 ft) for LR 1300 SX 166
Main screen page 1030
Mains cable 438
Maintaining preservation of the machine 1987
Maintenance 1785
Maintenance and inspection schedule 1785
Maintenance and service personnel 544
Maintenance personnel 546
Malfunctions 1023
Mandatory signs 563
Manufacturer 543
Meaning of machine-specific signs 568
Meaning of the safety signs 563
Mechanic components 470
Mechanical action 573
Mechanical inclinometer 1792, 1874
Menu bar 689, 778
Midfall 409
Midfall 1916.32 368
Midfall 2316.25 363
Midfall connecting link 365, 366, 370, 371
Midfall overview 362
Mid-point suspension on luffing jib 1916 333
Mid-point suspension on luffing jib 2316 294
Mid-point suspension on main boom 2821 180
Mid-point suspension on midfall 1916.32 369
Mid-point suspension on midfall 2316.25 364
Mid-point suspension on reducing adapter 2821/2316 221
Mixing 1806
Mode 868
Mode screen 693, 769, 799
Monitor 681, 795
Monitor buttons 801
Monitoring installations 64
Mount 830
Mount A 515
Mount B 516
Mount C 517
Mount the slinging plates 1223
Mounting bracket support K1 and bracket support K2 1133
Mounting rope protection pipes on main boom head 1293, 1404
Mounting the cabin railing* 1122
Mounting the ladder on the uppercarriage 1146
Mounting the platforms on the uppercarriage 1131
Mounting the rope protection rollers package 1481, 1647
Mounting the rope protection rollers package on jib head section 1713 1553
Mounting the second crawler side frame where space is limited 1202
Mounting the uppercarriage railing 1147
Mounting uppercarriage ladder for narrow track 1145, 1708
Mounts 514
Move machine's center of gravity to the center of the rotation axis 1700
Moving cabin platforms* into working position 1116

LWN/LR.x/V03.01/Auslieferung/2015-06-03/en

copyright by LIEBHERR

Moving the lightning rods* into working position 1286, 1353, 1376, 1473, 1544, 1637
Moving the lightning rods* on A-frame2 and A-frame3 into working position 1380, 1639
Moving the lightning rods* on A-frame2 into working position 1379, 1546
Moving the lightning rods* on the derrick boom head into working position 1354
Moving the lightning rods* on the fixed jib head into working position 1382, 1545
Moving the lightning rods* on the jib head as main boom head into working position 1474
Moving the lightning rods* on the luffing jib head into working position 1383, 1638
Moving the lightning rods* on the main boom head into working position 1287, 1377
Moving the machine backwards 911
Moving the machine forward 910
Moving the machine in crab mode 917
Moving the machine in follower mode 916
Moving the machine in trailer mode 914

N

Noise measurement data 58
Non-rotation resistant ropes 1941
Notes 1116, 1250, 1337, 1357, 1467, 1528, 1609, 1694
Notice signs 569

O

Obstacle warning light* 447, 1792, 1876
Oil analysis kit 1805
Oil concentrate 1805
Opening the return filter 1850
Operating elements 786
Operating elements at undercarriage with fixed track width 613
Operating elements at undercarriage* with adjustable track width 614
Operating elements in the cab 805
Operating elements on counterweight carriage* 616
Operating elements on mast 806
Operating elements on the undercarriage 613
Operating elements on the uppercarriage 615
Operating free-fall operation 956
Operating hours screen 712
Operating sensitive hoisting 1006
Operating the additional floodlights 840
Operating the assembly cylinder 968
Operating the cab lighting 841
Operating the crawler with counterweight carriage* 913
Operating the derrick hoist cylinder 953
Operating the edge limitation 984
Operating the emergency control 1019
Operating the engine compartment lighting 841
Operating the external air conditioning system* 849
Operating the floodlights on the uppercarriage 840
Operating the ground pressure display 982
Operating the inclinometer 983
Operating the jib 934
Operating the lifting height limitation 993
Operating the main boom 928
Operating the menu 852
Operating the radio 861
Operating the radius limitation 989
Operating the safety lever 860
Operating the sector limitation 987
Operating the slewing range limitation 992
Operating the swing 921
Operating the swing with counterweight carriage* 926
Operating the swing with suspended counterweight* 925
Operating the travel gear 909
Operating the ventilation 847
Operating the winch synchronization 961
Operating the windscreen washer system 843
Operating the windscreen wipers 842
Operating units 679
Operating winch 1 939
Operating winch 2 943
Operation 819
Operation of the machine down to -20 °C (-4 °F) (standard) 598
Operation of the machine down to -25 °C (-13 °F)* 599
Operation of the machine down to -40 °C (-40 °F)* 599
Operation of the machine on floating devices 596
Operational faults, diagnosis 1023
Operational planning 1045
Operator's seat 831
Ordering data 1804
Other lifting devices 1102
Outside mirror* 425
Overhead power lines 588
Overview of CF pendant straps of main boom 2821 + derrick boom 2220 1319
Overview of CF pendant straps on luffing jib 1916 1596
Overview of CF pendant straps on luffing jib 1916 + midfall 1916 1687
Overview of CF pendant straps on luffing jib 2316 1576
Overview of CF pendant straps on luffing jib 2316 + midfall 2316 1674
Overview of derrick equipment 379
Overview of main boom 2821 CF pendant straps 1234
Overview of main boom 2821 CF pendant straps + reducing adapter 2821/2316 1461
Overview of main boom 2821 steel pendant straps 1233

LWN/LR.x/V03.01//Auslieferung/2015-06-03/en

copyright by LIEBHERR

Overview of main boom 2821 steel pendant straps + derrick boom 2220 1316
Overview of main boom 2821 steel pendant straps + reducing adapter 2821/2316 1459
Overview of pendant straps on fixed jib 0906 1520
Overview of pendant straps on fixed jib 1008 1510
Overview of pendant straps on fixed jib 1507 1499
Overview of pendant straps on fixed jib 1713 1485
Overview of steel pendant straps on luffing jib 1916 1594
Overview of steel pendant straps on luffing jib 1916 + midfall 1916 1685
Overview of steel pendant straps on luffing jib 2316 1574
Overview of steel pendant straps on luffing jib 2316 + midfall 2316 1672
Owner 543

P

Parked position for a machine with derrick equipment* 1061
Parked position for a machine without derrick equipment* 1056
Parked position main boom 2821 + derrick (+ auxiliary jib) 1061
Parked position main boom 2821 + fixed jib 0906 + derrick 1062
Parked position main boom 2821 + fixed jib 1507 + derrick 1062
Parked position main boom 2821 + fixed jib 1713 + derrick 1061
Parked position main boom 2821 + luffing jib 1916 + derrick (+ auxiliary jib) 1064
Parked position main boom 2821 + luffing jib 2316 + derrick (+ auxiliary jib) 1063
Parked position of main boom 2821 (+ auxiliary jib) 1056
Parked position of main boom 2821 + fixed jib 0906 1058
Parked position of main boom 2821 + fixed jib 1008 1057
Parked position of main boom 2821 + fixed jib 1507 1057
Parked position of main boom 2821 + fixed jib 1713 1057
Parked position of main boom 2821 + luffing jib 1916 (+ auxiliary jib) 1059
Parked position of main boom 2821 + luffing jib 1916 + midfall 1916 1060
Parked position of main boom 2821 + luffing jib 2316 (+ auxiliary jib) 1058
Parked position of main boom 2821 + luffing jib 2316 + midfall 2316 1060
Parked position of main boom 2821 + reducing adapter 2821/2316 1056
Parked positions of boom configurations 1055
PDR* 1792
Pendant ropes 1794, 1914
Pendant strap with connecting link 197
Pendant straps A-frame1 to main boom head 2316 1459, 1461
Pendant straps A-frame1 to main boom head 2821 1233, 1234
Pendant straps A-frame2 to jib head 0906 1520
Pendant straps A-frame2 to jib head 1008 1510
Pendant straps A-frame2 to jib head 1507 1500
Pendant straps A-frame2 to jib head 1713 1486
Pendant straps A-frame3 to jib head 1916 1595, 1597, 1686, 1688
Pendant straps A-frame3 to jib head 2316 1575, 1578, 1673, 1675
Pendant straps on derrick boom 2220 388
Pendant straps on derrick boom head 2220.22 390
Pendant straps on derrick boom section 2220.22 11.7 m (38 ft) 389
Pendant straps on derrick boom section 2220.24 3 m (10 ft) 388
Permitted gradient for a machine with derrick equipment* 1087
Permitted gradient for a machine without derrick equipment* 1068
Permitted gradient for main boom 2821 + derrick (+ auxiliary jib) 1087
Permitted gradient for main boom 2821 + fixed jib 0906 1077
Permitted gradient for main boom 2821 + fixed jib 0906 + derrick 1089
Permitted gradient for main boom 2821 + fixed jib 1008 1075
Permitted gradient for main boom 2821 + fixed jib 1507 1073
Permitted gradient for main boom 2821 + fixed jib 1507 + derrick 1091
Permitted gradient for main boom 2821 + fixed jib 1713 1071
Permitted gradient for main boom 2821 + fixed jib 1713 + derrick 1093
Permitted gradient for main boom 2821 + luffing jib 1916 (+ auxiliary jib) 1083
Permitted gradient for main boom 2821 + luffing jib 1916 + derrick (+ auxiliary jib) 1095
Permitted gradient for main boom 2821 + luffing jib 1916 + Midfall 1916 1085
Permitted gradient for main boom 2821 + luffing jib 2316 (+ auxiliary jib) 1079
Permitted gradient for main boom 2821 + luffing jib 2316 + derrick (+ auxiliary jib) 1097
Permitted gradient for main boom 2821 + luffing jib 2316 + Midfall 2316 1081
Permitted gradient for main boom 2821 + reducing adapter 2821/2316 1069
Permitted gradient main boom 2821 (+ auxiliary jib) 1068
Personal protective equipment 546, 1792, 1878

LWN/LR.x/V03.01/Auslieferung/2015-06-03/en

copyright by LIEBHERR

Pinning A-frame1 equalizer to derrick boom pendant straps 1352
Pinning the A-frame 2 equaliser to the main boom 1536
Pinning the assembly cylinder to main boom base section 1271
Pinning the counterweight carriage pendant straps to the counterweight carriage 1443
Pinning the counterweight carriage with the basic machine 1427
Pinning the equalizer of A-frame2 to the main boom (jib 1507) 1538
Pinning the jib backstay straps (jib 1507) 1537
Pinning the jib to the jib base section 1533
Pinning the pendant straps 1257, 1342, 1365, 1533, 1631
Pinning the spacer frame with the uppercarriage 1441
Pinning the suspended counterweight pendant ropes to the counterweight frame 1439
Pinning together the main boom head, main boom sections and main boom base section 1360
Pins for CF pendant straps 188, 303, 342
Pins for CF pendant straps behind reducing adapter 239
Pins for CF pendant straps in front of reducing adapter 237
Pins for steel pendant straps 187, 302, 341
Pins for steel pendant straps behind reducing adapter 238
Pins for steel pendant straps in front of reducing adapter 237
Pins for the rope fixing point 412
Place support pads and bedding layers underneath 1167
Placing and lashing counterweight slabs 1434
Placing jack in transport position 1188
Placing ladder and floodlight in working position 1423
Placing the slewing bracket in support position 1166
Placing the slewing brackets in transport position 1190
Placing the swing brackets in the support position 1159
Plate 519
Plate1 112
Plate13 120
Plate14 121
Plate15 122
Plate16 123
Plate2 113
Plate3 114
Plate4 115
Plate5 116
Plate6 117
Plate7 118
Plate8 119
Platform 143
Platform on cabin 84
Platforms at undercarriage with fixed track width 141
Platforms on uppercarriage 83
Pocket lock 409
Poisoning and suffocation 579
Position 1 681, 689, 795
Position 10 685, 690
Position 11 686, 690
Position 12 686, 690
Position 13 686
Position 2 682, 689, 796
Position 3 682, 689, 796
Position 4 682, 690, 797
Position 5 682, 690, 798
Position 6 683, 798
Position 7 684
Position 8 685, 690
Position 9 685, 690
Position the basic machine in front of the wheeled counterweight carriage 1425
Positioning basic counterweight slab 14 t (30,864 lb) 1217
Positioning the ballast slabs 1418
Positioning the counterweight frame 1418
Positioning the counterweight slabs 10 t (22,046 lb) and the counterweight slabs 5 t (11,023 lb) 1217
Positioning the hook or pulley block 1053
Positioning the wheeled counterweight carriage 1420
Power cable 436
Preparing boom components for transport 1780
Preparing the crawler side frame 1193, 1703
Preparing the hydraulic hose 1894
Preparing the machine 1723
Preparing the machine with the radio remote control 974
Preparing the operating of the external air conditioning system 849
Preparing the undercarriage 1175
Preparing the valve block of the jib base section 1895
Preservation medium (anti-corrosion coating) 1807
Preserve machine for decommissioning 1998
Preserve machine for outdoor storage 1995
Preserve machine for reselling 1999
Preserve machine for storage for more than 7 months 1998
Preserving the basic machine 1993, 1996
Preserving the boom 1992, 1996
Preserving the machine 1987
Preserving the machine for indoor storage 1992
Preserving the machine for storage for up to 7 months 1992
Preserving the piston rods of the hydraulic cylinders in case of longer periods of non-use 1855
Preserving the ropes 1992, 1995
Priority Level screen (for Liebherr service personnel only) 1035
Product description 49
Programing rope layer change 1-2 980
Programing rope layer change 3-4 981
Programing rope layer change 5-6 981

LWN/LR.x/V03.01//Auslieferung/2015-06-03/en

copyright by LIEBHERR

Programing the jib radius limitation 989
Programing the main boom radius limitation 989
Programing the sector limitation 987
Programing the slewing range limitation 992
Programming layer change 980
Programming the edge limitation 984
Programming the lifting height limitation 993
Programming the setup 870, 1250, 1357, 1528, 1609
Prohibition signs 564
Protecting CF pendant strap bushes, connecting links and pins from corrosion 1912
Protecting pendant ropes, connecting links and pins from corrosion 1914
Protecting steel pendant straps, connecting links and pins from corrosion 1907
Protecting the piston rods of the hydraulic cylinders from corrosion 1855
Pulley block (100 t (220,459 lb)) 416
Pulley block (160 t (352,734 lb)) 414
Pulley block (300 t (661,377 lb)) 413
Pulley block (50 t (110,230 lb)) 417
Pulley block/hook* 413
Pump wear indicator* 486
Putting down the rope of winch1 and winch2 with installed main boom 1947
Putting on safety belt 839
Putting the heating system into operation 1980
Putting the load moment limiter lamp and flashing light into working position 1129
Putting the machine into operation 1156
Putting the tagline winch into operation 998
Putting the ventilation system into operation 1980

Q

Quad monitor 509, 811
Quick latch couplings* on jib luffing winch 488

R

Radio remote control* 439, 786, 973
Railing connection 133
Railing part A 86
Railing part B 87
Railing part1 for right platform 90
Railing part2 for right platform 92
Railing part3 for right platform 93
Railing part4 for left platform 100
Railing part5 for left platform 99
Railing part6 for left platform 97
Raise derrick boom 1355
Raising the derrick boom 1437
Reading light* for cabin 476
Readjusting layer change when changing ropes 1872
Reapplication intervals 1991
Rear counterweight 151
Rear cover 495
rechargeable battery 973
Reconfiguring the main boom 1719
Rectifying general engine error messages 1028
Rectifying grave engine error message 1028
Reducing adapter pendant strap 12 m (40 ft) 240, 242
Reducing piece overview 217
Reducing the constant pull of the tagline winch 1000
Reducing the load 1055
Reeve derrick rope rigging with auxiliary rope 1349
Reeve the Derrick pulley block 1349
Reeving A-frame 2/A-frame 3 1619
Reeving diagram - jib luffing winch as auxiliary winch 1248, 1335
Reeving diagram A-frame2/A-frame3 1579
Reeving diagrams for one rope across auxiliary jib (15 t (33.000 lb)) on jib head 1916, 1713, 1309, 1008 (load position1) 1608
Reeving diagrams for one rope across auxiliary jib (30 t (66.000 lb)) on jib head 2316 (load position1) 1588
Reeving diagrams for one rope across auxiliary jib (36 t (79300 lb)) on main boom head 2821 (load position1) 1245, 1332
Reeving diagrams for one rope across jib head 0906 (load position1) 1521
Reeving diagrams for one rope across jib head 1008 (load position1) 1512
Reeving diagrams for one rope across jib head 1507 (load position1) 1501
Reeving diagrams for one rope across jib head 1713 (load position1) 1487
Reeving diagrams for one rope across jib head 1916 (load position1) 1600, 1690
Reeving diagrams for one rope across jib head 2316 (load position1) 1580, 1677
Reeving diagrams for one rope across main boom head 2316 (load position1) 1463
Reeving diagrams for one rope across main boom head 2821 (load position1) 1236, 1323
Reeving diagrams for one rope across main boom head 2821 (load position2) 1489, 1504, 1514, 1523, 1583, 1603
Reeving diagrams for one rope across midfall 1916 (load position3) 1692
Reeving diagrams for one rope across midfall 2316 (load position3) 1679
Reeving diagrams for two ropes across auxiliary jib (36 t (79300 lb)) and main boom head 2821 (load position 1) 1247, 1334
Reeving diagrams for two ropes across jib head 0906 (load position1) 1523
Reeving diagrams for two ropes across jib head 1008 (load position1) 1513
Reeving diagrams for two ropes across jib head 1507 (load position1) 1503
Reeving diagrams for two ropes across jib head 1713 (load position1) 1488

LWN/LR.x/V03.01/Auslieferung/2015-06-03/en

copyright by LIEBHERR

Reeving diagrams for two ropes across jib head 2316, 1916, 1713, 1309, 1008 (load position1) 1582, 1601
Reeving diagrams for two ropes across main boom head 2316 (load position1) 1465
Reeving diagrams for two ropes across main boom head 2821 (load position1) 1241, 1328
Reeving the derrick rope rigging without auxiliary rope 1350
Reeving the rope 1288, 1290, 1399, 1401, 1475, 1478, 1547, 1550, 1640, 1643
Reeving the rope of the rope reeving winch 997
Reeving the rope using a rope reeving winch 1289, 1400, 1476, 1548, 1641
Reeving the rope without using a rope reeving winch 1295, 1406, 1483, 1555, 1649
Refueling pump* 430
Refuelling pump 1787
Release pressure on hydraulic tension jack 1841
Release the pendant ropes from the derrick boom 1419
Release transport lashing from the derrick pulley block 1352
Releasing safety belt 839
Remedying radio transmission interruptions longer than 8 seconds 978
Remedying radio transmission interruptions of less than 8 seconds 978
Removing support pads and bedding layers 1191
Removing the jib backstay straps 1258, 1366
Removing the rope protection pipes on auxiliary jib 1290, 1401, 1643
Removing the transport brackets 1202
Removing the transport safety 1184
Removing the uppercarriage lock 1174
Repair welding requirements 1886
Repairs on the steel structure 1886
Replacing fuses 1042
Replacing the belt drive including vibration damper, deflection pulley and springs 1985
Replacing the connecting links 1694
Replacing the dry air filter main element and dry air filter safety element 1814
Replacing the fresh air filter 1974
Replacing the fuel filter of auxiliary water heating 1982
Replacing the recirculated air filter 1972
Requesting the operating hours 851
Required length of winch1/winch2 rope 1049
Requirements to personnel 545
Rescue signs 567
Resetting daily operating hours 853
Resetting limitations 995
Resistance area, step voltage 591
Restrictions due to exposure to wind 1055
Retightening the chain 1837
Retract assembly cylinder 969
Retracting jacks and track width adjusting cylinders 1707
Retracting the derrick hoist cylinder 953
Retracting the track width adjusting cylinders and pinning the crawler side frames 1705
Retrofit kit for 0806 fixed jib 480
Retrofit kit for 1008 fixed jib 479
Retrofit kit for luffing jibs 1008 / 1309 / 1713 / 1916 / 2316 478
Retrofit kits* for operation with two ropes over the jib head section 478
Rigger 544, 545
Rigging and installing carbody counterweight slab 18.8 t (41,446 lb) 1211
Rigging and installing carbody counterweight slab 7.5 t (16,534 lb) 1213
Rigging and lifting the main boom base section 1263
Rigging and mounting the first crawler side frame 1176, 1193
Rigging and mounting the second crawler side frame 1184, 1202
Rigging equipment and/or sling gear 1100
Rigging the first crawler side frame 1177, 1194
Rigging the main boom on derrick rope rigging 1384
Rigging the transport brackets 1176
Right and left platform 141
Right control lever 640, 789
Right corner platform 143
Right double T-lever 646, 661
Right front cover 497
Right linear control lever 793
Right multi-directional control lever 640, 654
Right platform on uppercarriage 88
Right rear cover 499
Right steel plate 145
rope drive 1955
Rope fixation 405
Rope guide (type A) 178
Rope guide (type A/B) on main boom 2821 177
Rope guide (type B) 179
Rope lay direction 1939
Rope lay direction in the case of multi-strand reeving 1939
Rope lay direction on a multi-layer drum 1940
Rope lay direction on a single layer drum 1940
Rope measuring system 1792, 1872
Rope measuring system* 980
Rope pulleys 1795, 1957
Rope reeving system for A-frame 2/A-frame 3 1599
Rope reeving winch 996, 1789, 1829
Rope reeving winch* 61
Rope suspension and rope fixation 1795, 1961
Ropes 1795, 1929
Rotary connection 1791
Rotation resistant (wire) ropes 1941

S

Safety barrier* 421
Safety belt* 839

LWN/LR.x/V03.01//Auslieferung/2015-06-03/en

copyright by LIEBHERR

Safety equipment 63
Safety instructions 543
Safety pin 1113
Safety signs 568, 1792, 1879
Safety signs on the machine 549
Safety signs on the machine (US market) 556
Screen *Access control* 764
Screen *Add Selection* 1032
Screen *CAN Configuration* 1035
Screen *CAN Line Information* 1035
Screen *Clients* 1036
Screen *Confirm connection* 801
Screen *CORRECTION* 1033
Screen *Display Configuration* 1035
Screen *Drive Function* 1034
Screen *INPUT/OUTPUT* 1030
Screen *Language Selection* 1034
Screen *MDE/PDE* 1036
Screen *MEMORY* 1031
Screen *MESSAGES* 1033
Screen *Modem Function* 1034
Screen *Operation* in derrick mode 700
Screen *Operation* with activated assembly functions 800
Screen pages 1030
Screen *Sampling Trace* 1036
Screen *SELECT* 1031
Screen *Select File Load* 1032
Screen *Select File Save* 1032
Screen *Settings - components* 771
Screen *Settings - Litronic testing system* 777
Screen Setup - basic machine 742, 747
Screen Setup - main boom 744, 749
Screen *SPECIAL FUNCTIONS* 1034
Screen *Start* 692
Screen *System Language Selection* 1035
Screen *System Status* 1036
Screen *Time Function* 1034
Screen *Working range limitation* 754
Screen *Working range limitation - lifting height limitation* 761
Screen *Working range limitation - working range limitation* 754
Search floodlight 816
Securing the pendant straps with transport bracket 1779
Securing the railing parts 1125
Securing the railing parts with eye bolt 1127
Securing the railing parts with locking elements 1125
Select assembly cylinder 968
Select maximum pull force of the tagline winch 1002
Selecting a rope 1939
Selecting and changing settings 871
Selecting free-fall mode 955
Selecting free-fall operation for winch1 957
Selecting free-fall operation for winch2 957
Selecting jib on control lever 933
Selecting secured free-fall operation 955
Selecting the derrick hoist cylinder 952
Selecting the jib 933
Selecting the jib on control panel *X23* 934
Selecting the mode 868
Selecting unsecured free-fall operation 956
Sensitive hoisting* 1006
Set lubrication time 867
Set pause time 867
Set the constant tension of the tagline winch 999
Set the load capacity display to zero (taring) 891
Set track width adjusting cylinder to medium track 1705
Set track width adjusting cylinder to narrow track 1706
Setting control panel *X25** or control panel *X26** 829
Setting manual start or automatic start 850
Setting recirculated air or fresh air 847
Setting remaining operating time 858
Setting start of heating 857
Setting the activation time 858
Setting the air vent 846
Setting the alarm 858
Setting the cab in the working position and bolting in place 1711
Setting the constant engine RPM 826
Setting the crawler speed 909
Setting the jack-up height of the jacks 1162
Setting the load display of winch1 or winch2 to zero 891
Setting the pull force of the tagline winch 1000
Setting the rope length of winch1 to zero 980
Setting the rope length of winch2 to zero 980
Setting the rope length to 15 windings 981
Setting the rope length to zero 980
Setting the rope reeving winch to free-wheel 996
Setting the spring tension of railing doors 1881
Setting the swing speed 919
Setting the time and day 857
Settings - units screen 774
Settings screen 771
Setup - basic machine screen 719, 722, 725, 730, 734, 739
Setup - boom configuration 1 screen 719
Setup - boom configuration 2 screen 722
Setup - boom configuration 3 screen 725
Setup - boom configuration 4 screen 730
Setup - boom configuration 5 screen 734
Setup - boom configuration screen 717
Setup - jib screen 728, 732, 737, 745, 750
Setup - load chart screen 752
Setup - main boom screen 720, 723, 727, 731, 736, 741
Setup screen 715
Setup screen - boom configuration 6 739
Setup screen - boom configuration 8 742
Setup screen - boom configuration 9 747
Short work interruption 1010
Shutdown 1010

LWN/LR.x/V03.01/Auslieferung/2015-06-03/en

copyright by LIEBHERR

Single hook operation/two-hook operation 892
Single-hook mode with one winch on one hook 894
Single-hook mode with two winches on one hook 896
Single-hook mode with two winches on two hooks 897
Slinging plates on uppercarriage* 422
Snow and ice loads 585
Socket* in cab 490
Sorting and positioning platform parts 1131
Sorting and positioning railing parts 1138
Spacer bracket 186, 300, 339
Spacer bracket behind reducing adapter 233
Spacer bracket in front of reducing adapter 232
Spacer frame 393
Special hand signals for sling gear application 602
Special modes of operation 53
Split pin 1110
Spring cotter pin 1112
Starting the diesel engine 823
Starting the Litronic® testing system 1037
Starting the machine with the radio remote control 974
Starting the ventilation, heating, air conditioning, external air conditioning system* and auxiliary heating system* and ensuring that sufficient antifreeze has been added to the water circuit 1980
Start-up 821
Status bar 681, 795
Stay ropes 187, 236, 301, 340
Steel pendant straps 1793, 1906
Steel pendant straps on A-frame1 75
Steel pendant straps on A-frame2 253, 262, 273, 281, 305, 343
Steel pendant straps on A-frame3 306, 344
Steel pendant straps on fixed jib 0906 281
Steel pendant straps on fixed jib 1008 273
Steel pendant straps on fixed jib 1507 262
Steel pendant straps on fixed jib 1713 253
Steel pendant straps on jib base section 2316.20 304
Steel pendant straps on jib head 1008.20 278
Steel pendant straps on jib head 1713.21 259
Steel pendant straps on jib head 1916.21 348
Steel pendant straps on jib head 2316.20 310
Steel pendant straps on jib section 1008.17 3 m (10 ft) 276
Steel pendant straps on jib section 1008.17 6 m (20 ft) 277
Steel pendant straps on jib section 1713.18 12 m (40 ft) 258
Steel pendant straps on jib section 1713.18 3 m (10 ft) 256
Steel pendant straps on jib section 1713.18 6 m (20 ft) 257
Steel pendant straps on jib section 1916.18 12 m (40 ft) 347
Steel pendant straps on jib section 1916.18 3 m (10 ft) 346
Steel pendant straps on jib section 1916.18 6 m (20 ft) 347
Steel pendant straps on jib section 2316.20 12 m (40 ft) 309
Steel pendant straps on jib section 2316.20 3 m (10 ft) 308
Steel pendant straps on jib section 2316.20 6 m (20 ft) 308
Steel pendant straps on luffing jib 1916 343
Steel pendant straps on luffing jib 2316 304
Steel pendant straps on main boom 2821 189
Steel pendant straps on main boom base section 2821.30 189
Steel pendant straps on main boom head 2821.24 195
Steel pendant straps on main boom section 2316.25 1 m (3 ft) 241
Steel pendant straps on main boom section 2821.30 12 m (40 ft) 194
Steel pendant straps on main boom section 2821.30 3 m (10 ft) 190
Steel pendant straps on main boom section 2821.30 6 m (20 ft) 192
Steel pendant straps on midfall 1916.32 370
Steel pendant straps on midfall 2316.25 365
Steel pendant straps on reducing adapter 2821/2316 240
Steel pendant straps on reducing adapter 2821/2316.24 12 m (40 ft) 240
Steel plates 144
Steel structure 1793, 1885
Stop screen 800
Stopping the empty hook in free-fall operation 958
Storing ropes 1943
Strap 133
Strap support 134
Submenu bar 691
Suction flap* 423
Supply 435, 437
Supporting the machine 1704
Suspended counterweight 392
Suspending the transport brackets 1193
Swing 62, 919, 1788, 1819
Swing connection 1788, 1821
Swing emergency mode 1016
Swinging the load when load is on different boom heads/load positions 906
Swinging the machine to the left 912
Swinging the machine to the right 913
Swinging the uppercarriage to the left 924, 925
Swinging the uppercarriage to the right 924, 925
Switching off assembly mode functions 1310, 1447, 1567, 1663
Switching off auxiliary heating 857
Switching off battery main switch 1012
Switching off free-fall operation 959
Switching on assembly mode functions 1156
Switching on auxiliary heating 856

LWN/LR.x/V03.01//Auslieferung/2015-06-03/en

copyright by LIEBHERR

Switching on cylinder adjustment functions 1156
Switching on free-fall operation 954
Switching on the ignition 821
Switching swing free-wheel on/off using the control lever 921
Swivel the cab to the working position 1120

T

Tagline winch 1789, 1830
Tagline winch* 428, 998
Take/cede control 976
Take/cede control to/from radio remote control 976
Taking an oil sample 1809
Taking/ceding control in cabin 977
Technical condition of the machine 543
Technical data 58
Third hoist limit switch* 448
Tilting the cabin 864
Tilting-back supports 1904
Time-saving reconfiguring of the main boom 1719
Toggle switch 794
Tools required 1048
Top backstay shackle 234
Top cover 494
Topping up the gearbox oil 1817, 1819, 1824, 1827, 1831
Transport 1743
Transport of the machine on floating devices 597
Transporting basic machine with undercarriage with fixed track width with a transport vehicle 1768
Transporting basic machine with undercarriage* with adjustable track width with a transport vehicle 1771
Transporting ropes 1943
Transporting the basic machine with a transport vehicle 1768
Transporting the boom sections 1775
Transporting the pendant straps 1782
Traveling on gradients 1066
Troubleshooting 1028
Turn the tagline winch on or off 999
Turning swing free-wheel on/off on control panel X23 920
Turning tagline winch free-wheel on or off 1002
Turning the air conditioning system on or off 848
Turning the diesel engine on or off 976
Turning the edge limitation on or off 985
Turning the external air conditioning system off 850
Turning the external air conditioning system on 849
Turning the external air conditioning system* on or off 849
Turning the function sensitive lift on or off 1006
Turning the sector limitation on or off 988
Turning the swing free-wheel on or off 920
Twin-hook mode with two hooks on one load 905
Twin-hook mode with two hooks on two loads 903
Tying down the rear counterweight 1219
Type plate 49

U

Undercarriage 135
Undercarriage with fixed track width 135
Undercarriage* with adjustable track width 136
Understanding the oil diagnosis report 1811
Undoing counterweight carriages pendant straps from derrick boom 1432
Undoing the temporary attachment of the counterweight carriage pendant straps 1432
Unfolding steps from transport position 1188, 1206
Unload and position the derrick boom head components 1337
Unloading and positioning the jib components 1528, 1609
Unloading and positioning the main boom section 1250, 1357
Unloading machine with undercarriage with fixed track width 1159
Unloading machine with undercarriage* with adjustable track width 1166
Unloading the machine 1158
Uppercarriage 78
Urea solution 1806
Use as auxiliary winch 1005
Use as jib luffing winch 1004
Use as leader height adjusting winch 1005
Use at low temperatures 598
Use of the fire extinguisher 593
Using abseil rescue equipment 1007
Using emergency stop 1009
Using the ashtray 862
Using the cigarette lighter 863
Using the heater 848
Using the horn 860
Using the machine as assembly crane 1206

V

Vandalism protection* 493, 1713
Ventilation, heating and air-conditioning 455, 844, 1796, 1971
Vibrations 59
Video monitoring system* 504, 811
Video surveillance - basic device 506
Video surveillance - boom 508
Visual motion warning device* 484

W

Walk round 819
Warning signs 565
What to do in dangerous situations 591
Whole machine 1787
Winch 1/Winch 2 939
Winch 2 emergency mode 1013
Winch synchronization* 960
winch1/winch2 60, 1788, 1823

LWN/LR.x/V03.01/Auslieferung/2015-06-03/en

copyright by LIEBHERR

Winches 60
Winding ropes 1944
Windscreen wiper system 842
With retrofit kit access control (red and blue ignition keys)* 766
Without retrofit kit access control (black ignition keys) 764
Without retrofit kit access control (blue ignition keys) 765
Work area 547
Working at heights 595
Working range limitation* 984
Working with Blocked Crawlers 966

X

Xenon and halogen floodlights 1863
Xenon floodlight 1866

Z

Zoom camera 513
Zoom camera in auxiliary jib 15 t (33000 lb) 525
Zoom camera in auxiliary jib 36 t (79300 lb) 525
Zoom camera in fixed jib head 522
Zoom camera in luffing jib head 524
Zoom camera in main boom head 521

LWN/LR.x/V03.01//Auslieferung/2015-06-03/en

copyright by
LIEBHERR

LWN/LR.x/V03.01//Auslieferung/2015-06-03/en

copyright by
LIEBHERR